STATE OF CALIFORNIA - DEPARTMENT OF TRANSPORTATION

CONTRACT CHANGE ORDER

Change Requested by: Engineer

CCO 1	Suppl. No. 0	Contract No. 04 - 0120L4	Road ALA-80-1.6/2.7	FED. AID LOC.: NO FED AID

To: **M C M CONSTRUCTION INC**

You are directed to make the following changes from the plans and specifications or do the following described work not included in the plans and specifications for this contract. ***NOTE: This change order is not effective until approved by the Engineer.***

Description of work to be done, estimate of quantities and prices to be paid. (Segregate between additional work at contract price, agreed price and force account.) Unless otherwise stated, rates for rental of equipment cover only such time as equipment is actually used and no allowance will be made for idle time. This last percentage shown is the net accumulated increase or decrease from the original quantity in the Engineer's Estimate.

This is a maintain traffic CCO for the project.

Extra Work at Force Account:

Maintain the roadway as directed by the Engineer and provide additional traffic control for the convenience and direction of the public in accordance with Section 7-1.08, Public Convenience, of the Standard Specifications.

Provide for the State's share of flagging costs in accordance with Section 12-2.02, Flagging Cost, of the Standard Specifications.

Estimated cost of Extra Work at Force Account $20,000.00

Estimated Cost: **Increase** ☑ **Decrease** ☐ **$20,000.00**

By reason of this order the time of completion will be adjusted as follows: 0 days

Submitted by

Signature	Resident Engineer Ben Ghafghazi	Date 10/22/07

Approval Recommended by

Signature	Construction Engineer Ben Ghafghazi	Date 10/22/07

Engineer Approval by

Signature	Construction Engineer Ben Ghafghazi	Date 11/2/07

We the undersigned contractor, have given careful consideration to the change proposed and agree, if this proposal is approved, that we will provide all equipment, furnish the materials, except as may otherwise be noted above, and perform all services necessary for the work above specified, and will accept as full payment therefor the prices shown above.

NOTE: If you, the contractor, do not sign acceptance of this order, your attention is directed to the requirements of the specifications as to proceeding with the ordered work and filing a written protest within the time therein specified.

Contractor Acceptance by

Signature	(Print name and title) EDMUNDO A. PUCHI, TREASURER	Date 11/1/07

STATE OF CALIFORNIA - DEPARTMENT OF TRANSPORTATION

CONTRACT CHANGE ORDER MEMORANDUM

TO: AMER BATA / BEN GHAFGHAZI	FILE: **E.A.** 04 - 0120L4
FROM: BEN GHAFGHAZI	**CO-RTE-PM** ALA-80-1.6/2.7
	FED. NO. NO FED AID
CCO#: **1** SUPPLEMENT#: **0** Category Code: **AJZZ**	CONTINGENCY BALANCE (incl. this change) **$18,339,320.54**
COST: **$20,000.00** INCREASE ☑ DECREASE ☐	HEADQUARTERS APPROVAL REQUIRED? ☐ YES ☑ NO
SUPPLEMENTAL FUNDS PROVIDED: **$20,000.00**	IS THIS REQUEST IN ACCORDANCE WITH ENVIRONMENTAL DOCUMENTS? ☑ YES ☐ NO
CCO DESCRIPTION: Flagging & Traffic Control	**PROJECT DESCRIPTION:** Construct bridge, roadway, building and electrical system.

Original Contract Time:	Time Adj. This Change:	Previously Approved CCO Time Adjustments:	Percentage Time Adjusted: (including this change)	Total # of Unreconciled Deferred Time CCO(s): (including this change)
650 Day(s)	**0** Day(s)	**0** Day(s)	**0** %	**0**

THIS CHANGE ORDER PROVIDES FOR:

1. Maintain the roadway and provide additional traffic control for the sole convenience and direction of the public in accordance with Section 7-1.08, Public Convenience, of the Standard Specifications and as authorized by the Engineer.

2. Payment for the State's share of flagging costs in accordance with Section 12-2.02, Flagging Costs, of the Standard Specifications.

This work will be performed under Extra Work at Force Account for an estimated cost of $20,000. Supplemental funds have been provided for this work in the amount of $50,000.

No adjustment of the contract time is warranted, as this change does not affect the controlling operation.

Design and Maintenance concurrence is not required as this work is anticipated by the contract documents.

CONCURRED BY:

Construction Engineer:	Ben Ghafghazi	Date 9/12/07
Bridge Engineer:		Date
Project Engineer:		Date
Project Manager:		Date
FHWA Rep.:		Date
Environmental:		Date
Other (specify):		Date
Other (specify):		Date
District Prior Approval By:		Date
HQ (Issue Approve) By:		Date
Resident Engineer's Signature:		Date 9/12/07

ESTIMATE OF COST

	THIS REQUEST	TOTAL TO DATE
ITEMS	$0.00	$0.00
FORCE ACCOUNT	$20,000.00	$20,000.00
AGREED PRICE	$0.00	$0.00
ADJUSTMENT	$0.00	$0.00
TOTAL	$20,000.00	$20,000.00

FEDERAL PARTICIPATION

☐ PARTICIPATING ☐ PARTICIPATING IN PART ☐ NONE
☐ NON-PARTICIPATING (MAINTENANCE) ☑ NON-PARTICIPATING

FEDERAL SEGREGATION (if more than one Funding Source or P.I.P. type)
☐ CCO FUNDED PER CONTRACT ☐ CCO FUNDED AS FOLLOWS

FEDERAL FUNDING SOURCE	PERCENT

STATE OF CALIFORNIA - DEPARTMENT OF TRANSPORTATION

CONTRACT CHANGE ORDER MEMORANDUM

DATE: 4/22/2008 Page 1 of 1

TO: AMER BATA / BEN GHAFGHAZI	FILE: E.A. 04 - 0120L4
FROM: BEN GHAFGHAZI	CO-RTE-PM ALA-80-1.6/2.7
	FED. NO. NO FED AID
CCO#: 1 SUPPLEMENT#: 1 Category Code: AJZZ	CONTINGENCY BALANCE (incl. this change) $15,051,914.70
COST: $20,000.00 INCREASE ☑ DECREASE ☐	HEADQUARTERS APPROVAL REQUIRED? ☐ YES ☑ NO
SUPPLEMENTAL FUNDS PROVIDED: $20,000.00	IS THIS REQUEST IN ACCORDANCE WITH ENVIRONMENTAL DOCUMENTS? ☑ YES ☐ NO
CCO DESCRIPTION: Flagging & Traffic Control	**PROJECT DESCRIPTION:** Construct bridge, roadway, building and electrical system.

Original Contract Time:	Time Adj. This Change:	Previously Approved CCO Time Adjustments:	Percentage Time Adjusted: (including this change)	Total # of Unreconciled Deferred Time CCO(s): (including this change)
810 Day(s)	0 Day(s)	0 Day(s)	0 %	2

THIS CHANGE ORDER PROVIDES FOR:

1. Provide additional traffic control for the convenience and direction of the public in accordance with Section 7-1.08, Public Convenience, of the Standard Specifications and as authorized by the Engineer.

2. Payment for the State's share of flagging costs in accordance with Section 12-2.02, Flagging Costs, of the Standard Specifications.

This work will be performed under Extra Work at Force Account for an estimated cost of $20,000. Supplemental funds have been provided for this work in the amount of $50,000.

No adjustment of the contract time is warranted, as this change does not affect the controlling operation.

Design and Maintenance concurrence is not required as this work is anticipated by the contract documents.

CONCURRED BY:		
Construction Engineer:	Ben Ghafghazi	Date 4/23/08
Bridge Engineer:		Date
Project Engineer:		Date
Project Manager:		Date
FHWA Rep.:		Date
Environmental:		Date
Other (specify):		Date
Other (specify):		Date
District Prior Approval By:		Date
HQ (Issue Approve) By:		Date
Resident Engineer's Signature:		Date 4/23/08

ESTIMATE OF COST

	THIS REQUEST	TOTAL TO DATE
ITEMS	$0.00	$0.00
FORCE ACCOUNT	$20,000.00	$40,000.00
AGREED PRICE	$0.00	$0.00
ADJUSTMENT	$0.00	$0.00
TOTAL	$20,000.00	$40,000.00

FEDERAL PARTICIPATION

☐ PARTICIPATING ☐ PARTICIPATING IN PART ☑ NONE
☐ NON-PARTICIPATING (MAINTENANCE) ☐ NON-PARTICIPATING

FEDERAL SEGREGATION (if more than one Funding Source or P.I.P. type)
☑ CCO FUNDED PER CONTRACT ☐ CCO FUNDED AS FOLLOWS

FEDERAL FUNDING SOURCE	PERCENT

ADA Notice: For individuals with sensory disabilities, this document is available in alternate formats. For information call: (916) 654-6410 or TDD (916) 654-3880 or write Records and Forms Management, 1120 N Street, MS-89, Sacramento, CA 95814.

STATE OF CALIFORNIA - DEPARTMENT OF TRANSPORTATION

CONTRACT CHANGE ORDER

Change Requested by: Engineer

CCO 1	Suppl. No. 1	Contract No. 04 - 0120L4	Road ALA-80-1.6/2.7	FED. AID LOC.: NO FED AID

M C M CONSTRUCTION INC

You are directed to make the following changes from the plans and specifications or do the following described work not included in the plans and specifications for this contract. ***NOTE: This change order is not effective until approved by the Engineer.***

Description of work to be done, estimate of quantities and prices to be paid. (Segregate between additional work at contract price, agreed price and force account.) Unless otherwise stated, rates for rental of equipment cover only such time as equipment is actually used and no allowance will be made for idle time. This last percentage shown is the net accumulated increase or decrease from the original quantity in the Engineer's Estimate.

Extra Work at Force Account:

Where directed by the Engineer, provide additional traffic control for the convenience and direction of the public in accordance with Section 7-1.08, Public Convenience, of the Standard Specifications.

Provide for the State's share of flagging costs in accordance with Section 12-2.02, Flagging Cost, of the Standard Specifications.

Estimated cost of Extra Work at Force Account $20,000.00

Estimated Cost: Increase ☑ Decrease ☐ **$20,000.00**

By reason of this order the time of completion will be adjusted as follows: 0 days

Submitted by

Signature	Resident Engineer BEN GHAFGHAZI	Date 4/23/08

Approval Recommended by

Signature	Construction Engineer Ben Ghafghazi	Date 4/23/08

Engineer Approval by

Signature	Construction Engineer Ben Ghafghazi	Date 5/7/08

We the undersigned contractor, have given careful consideration to the change proposed and agree, if this proposal is approved, that we will provide all equipment, furnish the materials, except as may otherwise be noted above, and perform all services necessary for the work above specified, and will accept as full payment therefor the prices shown above.

NOTE: If you, the contractor, do not sign acceptance of this order, your attention is directed to the requirements of the specifications as to proceeding with the ordered work and filing a written protest within the time therein specified.

Contractor Acceptance by

Signature	(Print name and title) EDMUNDO A. PUCHI, TREASURER	Date 5/5/08

STATE OF CALIFORNIA - DEPARTMENT OF TRANSPORTATION

CONTRACT CHANGE ORDER MEMORANDUM

DATE: 12/2/2009 Page 1 of 1

TO: AMER BATA / BEN GHAFGHAZI

FROM: BEN GHAFGHAZI

FILE: **E.A.** 04 - 0120L4
CO-RTE-PM ALA-80-1.6/2.7
FED. NO. NO FED AID

CCO#: **1** SUPPLEMENT#: **2** Category Code: **AJZZ**

CONTINGENCY BALANCE (incl. this change) **$3,335,869.40**

COST: **$20,000.00** INCREASE ☑ DECREASE ☐

HEADQUARTERS APPROVAL REQUIRED? ☐ YES ☑ NO

SUPPLEMENTAL FUNDS PROVIDED: **$10,000.00**

IS THIS REQUEST IN ACCORDANCE WITH ENVIRONMENTAL DOCUMENTS? ☑ YES ☐ NO

CCO DESCRIPTION:
Additional funds.

PROJECT DESCRIPTION:
Construct bridge, roadway, building and electrical system.

Original Contract Time:	Time Adj. This Change:	Previously Approved CCO Time Adjustments:	Percentage Time Adjusted: (including this change)	Total # of Unreconciled Deferred Time CCO(s): (including this change)
810 Day(s)	**0** Day(s)	**184** Day(s)	**23** %	**13**

THIS CHANGE ORDER PROVIDES FOR:

Additional funds for traffic control and flagging in accordance with Sections 7-1.08, "Public Convenience," and 12-2.02, "Flagging Costs," of the Standard Specifications.

This change is necessary to pay for previously ordered CCO work and anticipated upcoming CCO work. The extent of additional traffic control was greater than originally anticipated.

This work will be paid as Extra Work at Force Account for an estimated cost of $20,000. This work will be financed with $10,000.00 in supplemental funds and $10,000.00 from the contingency fund.

Design and Maintenance concurrence is not required as this work is anticipated by the contract documents.

No adjustment of the contract time is warranted, as this change does not affect the controlling operation.

CONCURRED BY:

Construction Engineer:	Ben Ghafghazi	Date 12/8/09
Bridge Engineer:		Date
Project Engineer:		Date
Project Manager:		Date
FHWA Rep.:		Date
Environmental:		Date
Other (specify):		Date
Other (specify):		Date
District Prior Approval By:		Date
HQ (Issue Approve) By:		Date
Resident Engineer's Signature:		Date

ESTIMATE OF COST

	THIS REQUEST	TOTAL TO DATE
ITEMS	$0.00	$0.00
FORCE ACCOUNT	$20,000.00	$60,000.00
AGREED PRICE	$0.00	$0.00
ADJUSTMENT	$0.00	$0.00
TOTAL	$20,000.00	$60,000.00

FEDERAL PARTICIPATION

☐ PARTICIPATING ☐ PARTICIPATING IN PART ☑ NONE
☐ NON-PARTICIPATING (MAINTENANCE) ☐ NON-PARTICIPATING

FEDERAL SEGREGATION (If more than one Funding Source or P.I.P. type)
☑ CCO FUNDED PER CONTRACT ☐ CCO FUNDED AS FOLLOWS

FEDERAL FUNDING SOURCE PERCENT

ADA Notice: For individuals with sensory disabilities, this document is available in alternate formats. For information call: (916) 654-6410 or TDD (916) 654-3880 or write Records and Forms Management, 1120 N Street, MS-89, Sacramento, CA 95814.

CONTRACT CHANGE ORDER

Change Requested by: Engineer

CCO 1	Suppl. No. 2	Contract No. 04 - 0120L4	Road ALA-80-1.6/2.7	FED. AID LOC.: NO FED AID

To: M C M CONSTRUCTION INC

You are directed to make the following changes from the plans and specifications or do the following described work not included in the plans and specifications for this contract. ***NOTE: This change order is not effective until approved by the Engineer.***

Description of work to be done, estimate of quantities and prices to be paid. (Segregate between additional work at contract price, agreed price and force account.) Unless otherwise stated, rates for rental of equipment cover only such time as equipment is actually used and no allowance will be made for idle time. This last percentage shown is the net accumulated increase or decrease from the original quantity in the Engineer's Estimate.

Additional funds for traffic control.

Extra Work at Force Account:

As directed by the Engineer, provide additional traffic control for the convenience and direction of the public in accordance with Section 7-1.08, Public Convenience, of the Standard Specifications.

Provide for the State's share of flagging costs in accordance with Section 12-2.02, Flagging Cost, of the Standard Specifications.

Estimated cost of Extra Work at Force Account $20,000.00

Estimated Cost: Increase ☑ **Decrease** ☐ **$20,000.00**

By reason of this order the time of completion will be adjusted as follows: 0 days

Signature	**Resident Engineer** BEN GHAFGHAZI	**Date** 12/8/07
Signature	~~**Construction Engineer**~~ Ben Ghafghazi	**Date** 12/8/09
Signature	**Construction Manager** Amer Bata	**Date** 12/8/09

We the undersigned contractor, have given careful consideration to the change proposed and agree, if this proposal is approved, that we will provide all equipment, furnish the materials, except as may otherwise be noted above, and perform all services necessary for the work above specified, and will accept as full payment therefor the prices shown above.

NOTE: If you, the contractor, do not sign acceptance of this order, your attention is directed to the requirements of the specifications as to proceeding with the ordered work and filing a written protest within the time therein specified.

Signature N/A	**(Print name and title)**	**Date**

STATE OF CALIFORNIA - DEPARTMENT OF TRANSPORTATION

CONTRACT CHANGE ORDER MEMORANDUM

DATE: 6/14/2010 Page 1 of 1

TO: AMER BATA / BEN GHAFGHAZI

FROM: BEN GHAFGHAZI

FILE: **E.A.** 04 - 0120L4
CO-RTE-PM ALA-80-1.6/2.7
FED. NO. NO FED AID

CCO#: **1** SUPPLEMENT#: **3** Category Code: **AJZZ**

CONTINGENCY BALANCE (incl. this change) **$1,374,645.90**

COST: **$70,000.00** INCREASE ☑ DECREASE ☐

HEADQUARTERS APPROVAL REQUIRED? ☐ YES ☑ NO

SUPPLEMENTAL FUNDS PROVIDED: **$0.00**

IS THIS REQUEST IN ACCORDANCE WITH ENVIRONMENTAL DOCUMENTS? ☑ YES ☐ NO

CCO DESCRIPTION:
Additional Funds

PROJECT DESCRIPTION:
Construct bridge, roadway, building and electrical system.

Original Contract Time:	Time Adj. This Change:	Previously Approved CCO Time Adjustments:	Percentage Time Adjusted: (including this change)	Total # of Unreconciled Deferred Time CCO(s): (including this change)
810 Day(s)	**0** Day(s)	**184** Day(s)	**23** %	**0**

THIS CHANGE ORDER PROVIDES FOR:
Additional funds for traffic control and flagging in accordance with Sections 7-1.08, "Public Convenience," and 12-2.02, "Flagging Costs," of the Standard Specifications.

This change is necessary to pay for the extra work bills for this CCO work submitted to date. The extent of additional traffic control was greater than originally anticipated.

This work will be paid as Extra Work at Force Account for an estimated cost of $70,000, which can be financed from the contingency fund.

Design and Maintenance concurrence is not required as this work is anticipated by the contract documents.

No adjustment of the contract time is warranted, as this change does not affect the controlling operation.

CONCURRED BY:

Construction Engineer:	Ben Ghafghazi	Date 6/14/2010
Bridge Engineer:		Date
Project Engineer:		Date
Project Manager:		Date
FHWA Rep.:		Date
Environmental:		Date
Other (specify):		Date
Other (specify):		Date
District Prior Approval By:		Date
HQ (Issue Approve) By:		Date
Resident Engineer's Signature:		Date 6/14/2010

ESTIMATE OF COST

	THIS REQUEST	TOTAL TO DATE
ITEMS	$0.00	$0.00
FORCE ACCOUNT	$70,000.00	$130,000.00
AGREED PRICE	$0.00	$0.00
ADJUSTMENT	$0.00	$0.00
TOTAL	$70,000.00	$130,000.00

FEDERAL PARTICIPATION

☐ PARTICIPATING ☐ PARTICIPATING IN PART ☑ NONE
☐ NON-PARTICIPATING (MAINTENANCE) ☐ NON-PARTICIPATING

FEDERAL SEGREGATION (if more than one Funding Source or P.I.P. type)
☑ CCO FUNDED PER CONTRACT ☐ CCO FUNDED AS FOLLOWS

FEDERAL FUNDING SOURCE	PERCENT

ADA Notice: For individuals with sensory disabilities, this document is available in alternate formats. For information call: (916) 654-6410 or TDD (916) 654-3880 or write Records and Forms Management, 1120 N Street, MS-89, Sacramento, CA 95814.

STATE OF CALIFORNIA - DEPARTMENT OF TRANSPORTATION

CONTRACT CHANGE ORDER

Change Requested by: Engineer

CCO: 1	Suppl. No. 3	Contract No. 04 - 0120L4	Road ALA-80-1.6/2.7	FED. AID LOC.: NO FED AID

To: **M C M CONSTRUCTION INC**

You are directed to make the following changes from the plans and specifications or do the following described work not included in the plans and specifications for this contract. ***NOTE: This change order is not effective until approved by the Engineer.***

Description of work to be done, estimate of quantities and prices to be paid. (Segregate between additional work at contract price, agreed price and force account.) Unless otherwise stated, rates for rental of equipment cover only such time as equipment is actually used and no allowance will be made for idle time. This last percentage shown is the net accumulated increase or decrease from the original quantity in the Engineer's Estimate.

Extra Work at Force Account:

Provide additional funds for additional traffic control for the convenience and direction of the public in accordance with Section 7-1.08, Public Convenience, of the Standard Specifications.

Provide for the State's share of flagging costs in accordance with Section 12-2.02, Flagging Cost, of the Standard Specifications.

Estimated cost of Extra Work at Force Account $70,000.00

Estimated Cost: **Increase** ☑ **Decrease** ☐ **$70,000.00**

By reason of this order the time of completion will be adjusted as follows: 0 days

Signature	**Resident Engineer** Ben Ghafghazi	**Date** 6/14/2010
Signature	**Construction Engineer** Ben Ghafghazi	**Date** 6/14/2010
Signature	**Construction Manager** Amer Bata	**Date** 6/14/2010

We the undersigned contractor, have given careful consideration to the change proposed and agree, if this proposal is approved, that we will provide all equipment, furnish the materials, except as may otherwise be noted above, and perform all services necessary for the work above specified, and will accept as full payment therefor the prices shown above.

NOTE: If you, the contractor, do not sign acceptance of this order, your attention is directed to the requirements of the specifications as to proceeding with the ordered work and filing a written protest within the time therein specified.

Signature	**(Print name and title)**	**Date**

STATE OF CALIFORNIA - DEPARTMENT OF TRANSPORTATION

CONTRACT CHANGE ORDER MEMORANDUM

DATE: 8/27/2010 Page 1 of 1

TO: AMER BATA / BEN GHAFGHAZI	FILE: E.A. 04 - 0120L4
FROM: BEN GHAFGHAZI	CO-RTE-PM ALA-80-1.6/2.7
	FED. NO. NO FED AID
CCO#: 1 SUPPLEMENT#: 4 Category Code: AJZZ	CONTINGENCY BALANCE (incl. this change): $1,081,318.90
COST: $25,000.00 INCREASE ☑ DECREASE ☐	HEADQUARTERS APPROVAL REQUIRED? ☐ YES ☑ NO
SUPPLEMENTAL FUNDS PROVIDED: $0.00	IS THIS REQUEST IN ACCORDANCE WITH ENVIRONMENTAL DOCUMENTS? ☑ YES ☐ NO
CCO DESCRIPTION: Provide additional funds	**PROJECT DESCRIPTION:** Construct bridge, roadway, building and electrical system.

Original Contract Time:	Time Adj. This Change:	Previously Approved CCO Time Adjustments:	Percentage Time Adjusted: (including this change)	Total # of Unreconciled Deferred Time CCO(s): (including this change)
810 Day(s)	0 Day(s)	184 Day(s)	23 %	0

THIS CHANGE ORDER PROVIDES FOR:

Additional funds for traffic control and flagging in accordance with Sections 7-1.08, "Public Convenience," and 12-2.02, "Flagging Costs," of the Standard Specifications.

This change is necessary to pay for the extra work bills for this CCO work submitted to date. The extent of additional traffic control was greater than originally anticipated.

This work will be paid as Extra Work at Force Account for an estimated cost of $25,000.00, which can be financed from the contingency fund.

Design and Maintenance concurrence is not required as this work is anticipated by the contract documents.

No adjustment of the contract time is warranted, as this change does not affect the controlling operation.

CONCURRED BY:

Construction Engineer:	Ben Ghafghazi	Date 8/27/10
Bridge Engineer:		Date
Project Engineer:		Date
Project Manager:		Date
FHWA Rep.:		Date
Environmental:		Date
Other (specify):		Date
Other (specify):		Date
District Prior Approval By:		Date
HQ (Issue Approve) By:		Date
Resident Engineer's Signature:		Date 9/1/2010

ESTIMATE OF COST

	THIS REQUEST	TOTAL TO DATE
ITEMS	$0.00	$0.00
FORCE ACCOUNT	$25,000.00	$155,000.00
AGREED PRICE	$0.00	$0.00
ADJUSTMENT	$0.00	$0.00
TOTAL	$25,000.00	$155,000.00

FEDERAL PARTICIPATION

☐ PARTICIPATING ☐ PARTICIPATING IN PART ☒ NONE
☐ NON-PARTICIPATING (MAINTENANCE) ☐ NON-PARTICIPATING

FEDERAL SEGREGATION (if more than one Funding Source or P.I.P. type)
☑ CCO FUNDED PER CONTRACT ☐ CCO FUNDED AS FOLLOWS

FEDERAL FUNDING SOURCE	PERCENT

ADA Notice: For individuals with sensory disabilities, this document is available in alternate formats. For information call: (916) 654-6410 or TDD (916) 654-3880 or write Records and Forms Management, 1120 N Street, MS-89, Sacramento, CA 95814.

STATE OF CALIFORNIA - DEPARTMENT OF TRANSPORTATION

CONTRACT CHANGE ORDER

Change Requested by: Engineer

CCO: 1	Suppl. No. 4	Contract No. 04 - 0120L4	Road ALA-80-1.6/2.7	FED. AID LOC.: NO FED AID

To: **M C M CONSTRUCTION INC**

You are directed to make the following changes from the plans and specifications or do the following described work not included in the plans and specifications for this contract. ***NOTE: This change order is not effective until approved by the Engineer.***

Description of work to be done, estimate of quantities and prices to be paid. (Segregate between additional work at contract price, agreed price and force account.) Unless otherwise stated, rates for rental of equipment cover only such time as equipment is actually used and no allowance will be made for idle time. This last percentage shown is the net accumulated increase or decrease from the original quantity in the Engineer's Estimate.

Provide Additional Funds

Extra Work at Force Account:

Provide additional funds for additional traffic control for the convenience and direction of the public in accordance with Section 7-1.08, Public Convenience, of the Standard Specifications.

Provide for the State's share of flagging costs in accordance with Section 12-2.02, Flagging Cost, of the Standard Specifications.

Estimated cost of Extra Work at Force Account $25,000.00

Estimated Cost: Increase ☑ **Decrease** ☐ **$25,000.00**

By reason of this order the time of completion will be adjusted as follows: 0 days

Submitted by

Signature	Resident Engineer BEN GHAFGHAZI	Date 9/1/2010

Approval Recommended by

Signature	Construction Engineer Ben Ghafghazi	Date 9/1/2010

Engineer Approval by

Signature	Construction Manager Amer Bata	Date 9/3/10

We the undersigned contractor, have given careful consideration to the change proposed and agree, if this proposal is approved, that we will provide all equipn furnish the materials, except as may otherwise be noted above, and perform all services necessary for the work above specified, and will accept as full paymer therefor the prices shown above.

NOTE: If you, the contractor, do not sign acceptance of this order, your attention is directed to the requirements of the specifications as to proceeding with the ordered work and filing a written protest within the time therein specified.

Contractor Acceptance by

Signature NOT Required	(Print name and title)	Date

CONTRACT CHANGE ORDER

Change Requested by: Engineer

CCO 2	Suppl. No. 0	Contract No. 04 - 0120L4	Road ALA-80-1.6/2.7	FED. AID LOC.: NO FED AID

To: **M C M CONSTRUCTION INC**

You are directed to make the following changes from the plans and specifications or do the following described work not included in the plans and specifications for this contract. ***NOTE: This change order is not effective until approved by the Engineer.***

Description of work to be done, estimate of quantities and prices to be paid. (Segregate between additional work at contract price, agreed price and force account.) Unless otherwise stated, rates for rental of equipment cover only such time as equipment is actually used and no allowance will be made for idle time. This last percentage shown is the net accumulated increase or decrease from the original quantity in the Engineer's Estimate.

Adjustment of Compensation at Unit Price:

Adjust the contract unit prices for the contract item listed below in accordance with Section 5-1.13, "Compensation Adjustments for Price index Fluctuations", of the Special Provisions.

Item 86, Asphalt Concrete (TYPE A)

Estimated cost of Adjustment of Compensation at Agreed Unit Price (Increase).....$37,600.00

Estimated cost of Adjustment of Compensation at Agreed Unit Price (Decrease).....<$37,600.00>

Estimated Cost: Increase ☐ **Decrease** ☐ **$0.00**

By reason of this order the time of completion will be adjusted as follows: 0 days

Submitted by		
Signature	Resident Engineer Ben Ghafghazi	Date 11/2/07
Approval Recommended by		
Signature	Construction Engineer Ben Ghafghazi	Date 11/2/07
Engineer Approval by		
Signature	Construction Engineer Ben Ghafghazi	Date 6/3/08

We the undersigned contractor, have given careful consideration to the change proposed and agree, if this proposal is approved, that we will provide all equipment, furnish the materials, except as may otherwise be noted above, and perform all services necessary for the work above specified, and will accep as full payment therefor the prices shown above.

NOTE: If you, the contractor, do not sign acceptance of this order, your attention is directed to the requirements of the specifications as to proceeding with the ordered work and filing a written protest within the time therein specified.

Contractor Acceptance by		
Signature	(Print name and title) EDMUNDO A. TUCHI, TREASURER	Date 5/29/08

STATE OF CALIFORNIA - DEPARTMENT OF TRANSPORTATION

CONTRACT CHANGE ORDER MEMORANDUM

TO: AMER BATA / BEN GHAFGHAZI	FILE: **E.A.** 04 - 0120L4
FROM: BEN GHAFGHAZI	**CO-RTE-PM** ALA-80-1.6/2.7
	FED. NO. NO FED AID
CCO#: **2** SUPPLEMENT#: **0** Category Code: **AQZZ**	CONTINGENCY BALANCE (incl. this change) **$18,349,741.54**
COST: **$0.00** INCREASE ☐ DECREASE ☐	HEADQUARTERS APPROVAL REQUIRED? ☐ YES ☑ NO
SUPPLEMENTAL FUNDS PROVIDED: **$37,600.00**	IS THIS REQUEST IN ACCORDANCE WITH ENVIRONMENTAL DOCUMENTS? ☑ YES ☐ NO
CCO DESCRIPTION: AC Price index	**PROJECT DESCRIPTION:** Construct bridge, roadway, building and electrical system.

Original Contract Time:	Time Adj. This Change:	Previously Approved CCO Time Adjustments:	Percentage Time Adjusted: (including this change)	Total # of Unreconciled Deferred Time CCO(s): (including this change)
650 Day(s)	**0** Day(s)	**0** Day(s)	**0** %	**0**

THIS CHANGE ORDER PROVIDES FOR:

Adjustment of compensation for fluctuations in the California Statewide Paving Asphalt Price Index.

This change is made in accordance with the requirements of Section 5-1.13, "Compensation Adjustment for Price Index Fluctuations", of the Special Provisions. Contract Item 86, "Asphalt Concrete (TYPE A)", is subject to adjustment.

This work will be paid as and Adjustment of Compensation at Unit Price of $37,600.00 for increases and <$37,600.00> for decreases. Increases will be financed from supplemental funds of $37,600.00 allotted for this work. Decreases will be returned to the contingency fund.

Design and Maintenance concurrence is not required as this work is anticipated by the contract documents.

CONCURRED BY:

Construction Engineer:	Ben Ghafghazi	Date 11/2/07
Bridge Engineer:		Date
Project Engineer:		Date
Project Manager:		Date
FHWA Rep.:		Date
Environmental:		Date
Other (specify):		Date
Other (specify):		Date
District Prior Approval By:		Date
HQ (Issue Approve) By:		Date
Resident Engineer's Signature:		Date 11/2/07

ESTIMATE OF COST

	THIS REQUEST	TOTAL TO DATE
ITEMS	$0.00	$0.00
FORCE ACCOUNT	$0.00	$0.00
AGREED PRICE	$0.00	$0.00
ADJUSTMENT	$0.00	$0.00
TOTAL	$0.00	$0.00

FEDERAL PARTICIPATION

☐ PARTICIPATING ☐ PARTICIPATING IN PART ☑ NONE
☐ NON-PARTICIPATING (MAINTENANCE) ☐ NON-PARTICIPATING

FEDERAL SEGREGATION (if more than one Funding Source or P.I.P. type)
☑ CCO FUNDED PER CONTRACT ☐ CCO FUNDED AS FOLLOWS

FEDERAL FUNDING SOURCE	PERCENT

STATE OF CALIFORNIA - DEPARTMENT OF TRANSPORTATION

CONTRACT CHANGE ORDER

Change Requested by: Engineer

CCO 3 Suppl. No. 0 Contract No. 04 - 0120L4 Road ALA-80-1.6/2.7 FED. AID LOC.: NO FED AID

To: M C M CONSTRUCTION INC

You are directed to make the following changes from the plans and specifications or do the following described work not included in the plans and specifications for this contract. ***NOTE: This change order is not effective until approved by the Engineer.***

Description of work to be done, estimate of quantities and prices to be paid. (Segregate between additional work at contract price, agreed price and force account.) Unless otherwise stated, rates for rental of equipment cover only such time as equipment is actually used and no allowance will be made for idle time. This last percentage shown is the net accumulated increase or decrease from the original quantity in the Engineer's Estimate.

Revise sign panel details on Sheet SD-1, "Sign Panel Details," as shown on Sheet 2 of 3 of this CCO.

Revise Sign details on Sheet SQ1,"Sign Quantities," as shown on Sheet 3 of 3 of this CCO. The changes are as follows:

1) Change Sign Nos. 1 and 2 from 1 Post to 2 Post.
2) Change Sign Nos. 4 and 7 from 2 Post to 1 Post.
3) Change Sign Panel Nos. 4 and 7 from Framed Aluminum to Unframed Aluminum.

All Work shall be in accordance with Sections 10-1.73, "Roadside Signs," and 10-1.74,"Furnish Signs," of the Standard Specifications and Section 56, "Signs," of the Standard Specifications.

There will be no cost or credit due to this change.

Estimated Cost: Increase ☐ Decrease ☐ $0.00

By reason of this order the time of completion will be adjusted as follows: 0 days

Submitted by

Signature	Resident Engineer Ben Ghafghazi	Date 10/16/07

Approval Recommended by

Signature	Construction Engineer Ben Ghafghazi	Date 10/16/07

Engineer Approval by

Signature	Construction Engineer Ben Ghafghazi	Date 10/31/07

We the undersigned contractor, have given careful consideration to the change proposed and agree, if this proposal is approved, that we will provide all equipment, furnish the materials, except as may otherwise be noted above, and perform all services necessary for the work above specified, and will accept as full payment therefor the prices shown above.

NOTE: **If you, the contractor, do not sign acceptance of this order, your attention is directed to the requirements of the specifications as to proceeding with the ordered work and filing a written protest within the time therein specified.**

Contractor Acceptance by

Signature	(Print name and title) EDMUNDO A. INCHI, TREASURER	Date 10/25/07

DIST	COUNTY	ROUTE	KILOMETER POST TOTAL PROJECT	SHEET No	TOTAL SHEETS
04	Ala	80	1.6/2.7	95	643

REGISTERED CIVIL ENGINEER 8-30-06

1-29-07
PLANS APPROVAL DATE

J.L. Struven No. 49964 Exp. 12-31-08 CIVIL STATE OF CALIFORNIA

REGISTERED PROFESSIONAL ENGINEER JAIME E. GUTIERREZ No. C 052324 Exp. 12-31-08 CIVIL STATE OF CALIFORNIA

Caltrans Metric

The State of California or its officers or agents shall not be responsible for the accuracy or completeness of electronic copies of this plan sheet.

To go to the Caltrans web site, go to http://www.dot.ca.gov

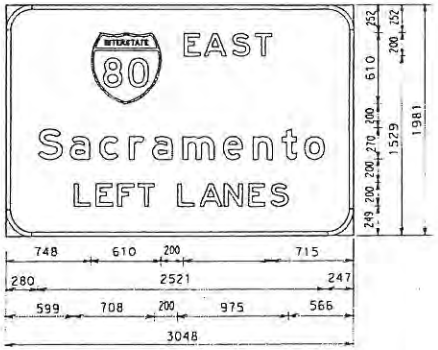

225 mm Radius, 38 mm Border, White on Green;
[EAST] E; [Sacramento] E; [LEFT LANES] E;

(1)

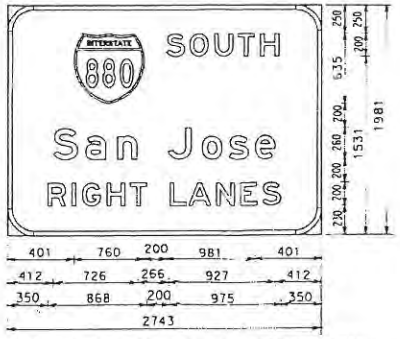

225 mm Radius, 38 mm Border, White on Green;
[SOUTH] E; [San Jose] E Mod;
[RIGHT LANES] E;

(2)

NOTES:

1. Footing shall be placed against undisturbed material.
2. Final elevations determined by Engineer.
3. The Contractor shall verify all controlling field dimensions before ordering or fabricating any material.
4. For clearance, see Structure Plans.
5. For Details not shown, see Standard Plans S112, S115 and Revised Standard Plans RSP S109, RSP S110, RSP S111, RSP S113, RSP S114 and RSP 116.

LEGEND:

To be constructed by future contract

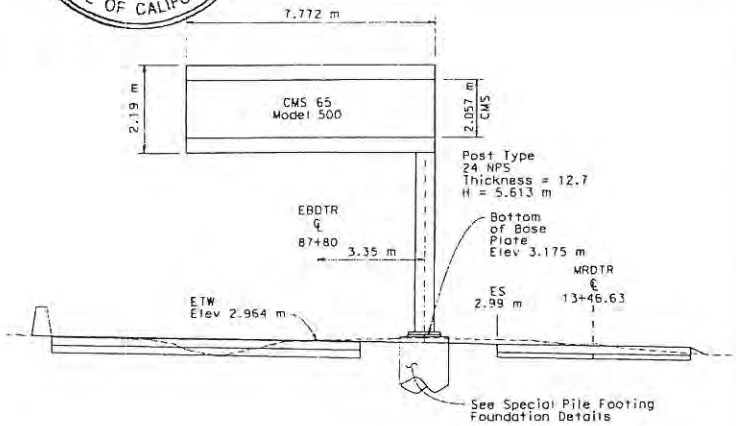

(B) EBDTR 87+80

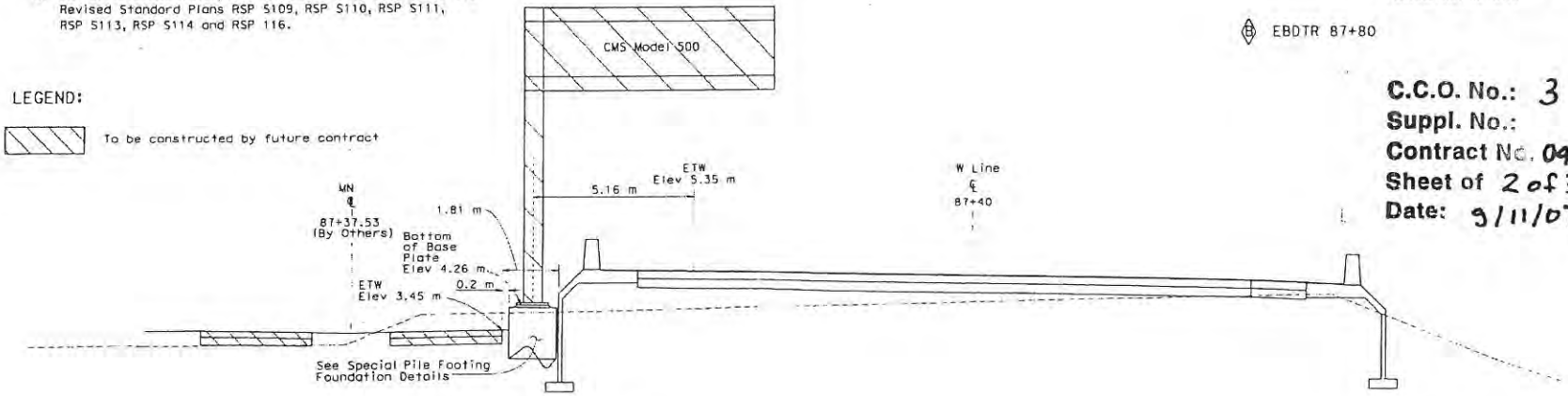

(A) W 87+40

C.C.O. No.: 3
Suppl. No.:
Contract No. 04-0120L4
Sheet of 2 of 3
Date: 9/11/07

ALL DIMENSIONS ARE IN MILLIMETERS UNLESS OTHERWISE SHOWN

SIGN PANEL DETAILS

NO SCALE

SD-1

	DATE	REVISED BY	DATE REVISED
CALCULATED/DESIGNED BY	HSR		
CHECKED BY	JLS		

PROJECT ENGINEER J. L. STRUVEN

STATE OF CALIFORNIA - DEPARTMENT OF TRANSPORTATION
Caltrans
TRAFFIC

07-19-07 11:48 P:\DGN\EA 0120L1\sd01.dgn

FOR REDUCED PLANS ORIGINAL SCALE IS IN MILLIMETERS 0 20 40 60 80

USERNAME => fcorzon
DGN FILE => 4012010sd01.dgn

CU 04251 | EA 0120L1

Caltrans Metric

OVERHEAD SIGN QUANTITIES

Sign	Location	Furnishing Sign Structure (Truss)	Install Sign Structure (Truss)	Remove Sign Structure	Relocate Changeable Message Sign
		Kg		EA	
B	EBDIR 87+80	7541	7541		1
C	E 88+35				
Total		7541	7541		1

ROADSIDE SIGN INSTALLATION

Sign	Code	Panel Size (mm x mm)	Post Size and Length 89 mm x 140 mm	Post Size and Length 150 mm x 200 mm	Roadside Sign 1 Post	Roadside Sign 2 Post	Remove Roadside Sign	Relocate Roadside Sign Two Post
					EA			
1	G20-5(CA)	3048 x 1981		6.0 m		1		
2	G20-5(CA)	2743 x 1981		6.0 m		1		
3	R2-1(50)						1	
4	R2-1(50)	914 x 1143	4.65 m		1			
5	D86							
6	D86							
7	R2-1(15)	610 x 762			1			
Total					2	2	1	2

SIGN PANEL SUMMARY

Number	Sign Code	Sign Size mm x mm	Sign Area m²	Single Faced	Double Faced	Background Sheeting Color	Background Retro-Reflective ASTM Type	Legend Sheeting Color	Legend Retro-Reflective ASTM Type	Graphic Film Standard	Graphic Film Premium	Roadside Signs Single Sheet FRP 1.4 mm	Roadside Signs Single Sheet Framed Aluminum mm mm mm	Roadside Signs Single Sheet Unframed Aluminum mm mm mm	Roadside Signs Laminated 25.4 mm Type H	Roadside Signs Laminated 63.5 mm Type H	Roadside Signs Formed	Overhead Laminated Type A	Overhead Formed w/o RSPF	Overhead Formed w/ RSPF	Description
		mm x mm	m²									m²									
1	G20-5(CA)	3048 x 1981	6.04	X		Green	III	White	III	X											
2	G20-5(CA)	2743 x 1981	5.43	X		Green	III	White	III	X											
4	R2-1(50)	914 x 1143	1.04	X		White	III	Black	I	X		Total	1.04								
7	R2-1(15)	610 x 762	0.46	X		White	III	Black	I	X		Total	0.46								
Total												Total	1.50								

California Sign Codes are designated by (CA). Otherwise, Federal Codes are used.

REGISTERED PROFESSIONAL ENGINEER
JAIME E. GUTIERREZ
No. C 052324
Exp. 12-31-08
CIVIL
STATE OF CALIFORNIA

ABBREVIATIONS:

FRP Fiberglass Reinforced Plastic
RSPF Removable Sign Panel Frame

C.C.O. No.: 3
Suppl. No.:
Contract No. 04-0120L4
Sheet of 3 of 3
Date: 9/11/07

SIGN QUANTITIES

SQ-1

STATE OF CALIFORNIA - DEPARTMENT OF TRANSPORTATION
Caltrans
TRAFFIC

PROJECT ENGINEER J. L. STRUVEN

CALCULATED/DESIGNED BY HSR DATE 4/06 REVISED BY
CHECKED BY JLS 4/06 DATE REVISED

FOR REDUCED PLANS ORIGINAL SCALE IS IN MILLIMETERS

CU 04251 EA 0120L4

08-28-06

STATE OF CALIFORNIA - DEPARTMENT OF TRANSPORTATION

CONTRACT CHANGE ORDER MEMORANDUM

DATE: 9/11/2007 Page 1 of 1

TO: AMER BATA / BEN GHAFGHAZI

FROM: BEN GHAFGHAZI

FILE: E.A. 04 - 0120L4
CO-RTE-PM ALA-80-1.6/2.7
FED. NO. NO FED AID

CCO#: 3 SUPPLEMENT#: 0 Category Code: CKPP

CONTINGENCY BALANCE (incl. this change) $18,339,365.54

COST: $0.00 INCREASE ☐ DECREASE ☐

HEADQUARTERS APPROVAL REQUIRED? ☐ YES ☑ NO

SUPPLEMENTAL FUNDS PROVIDED: $0.00

IS THIS REQUEST IN ACCORDANCE WITH ENVIRONMENTAL DOCUMENTS? ☑ YES ☐ NO

CCO DESCRIPTION:
Revise Signs

PROJECT DESCRIPTION:
Construct bridge, roadway, building and electrical system.

Original Contract Time:	Time Adj. This Change:	Previously Approved CCO Time Adjustments:	Percentage Time Adjusted: (including this change)	Total # of Unreconciled Deferred Time CCO(s): (including this change)
810 Day(s)	0 Day(s)	0 Day(s)	0 %	0

THIS CHANGE ORDER PROVIDES FOR:

Revising sign panes as shown on sheets 2 of 3 and 3 of 3 of this CCO.

The revisions are as follows:

A) Revise sign panel details on Sheet SD-1, "Sign Panel Details," as shown on Sheet 2 of 3 of this CCO.

B) Revise Sign details on Sheet SQ-1,"Sign Quantities," as shown on Sheet 3 of 3 of this CCO.

1) Change Sign Nos. 1 and 2 from 1 Post to 2 Post.
2) Change Sign Nos. 4 and 7 from 2 Post to 1 Post.
3) Change Sign Panel Nos. 4 and 7 from Framed Aluminum to Unframed Aluminum.

The revision to Sheet SD-1 is required because Sign 2 is detail is incorrect. The sign should read "880 South," not "80 East per the contract plans. The change in the posts on Sheet SQ-1 is required to match the number of posts to the sign size. Signs 1 and 2 are too large for 1 Post and must be changed to 2 Post. Signs 4 and 7 are not large enough to require 2 Posts and will be changed to 1 Post. Signs 4 and 7 are also not large enough to be framed and will be changed to unframed. All Work shall be in accordance with Sections 10-1.73, "Roadside Signs," and 10-1.74,"Furnish Signs," of the Standard Specifications and Section 56, "Signs," of the Standard Specifications

There will be no cost or credit due to this change.

This change was requested by Jaime Gutierrez of Project Development and concurred by Jerilyn Struven of Traffic Signing. Maintenance concurrence is not necessary since this CCO only changes sign details and no new work is being added.

CONCURRED BY:

Construction Engineer:	Ben Ghafghazi	Date	10/16/07
Bridge Engineer:		Date	
Project Engineer:	Jaime Gutierrez	Date	8/2/07
Project Manager:		Date	
FHWA Rep.:		Date	
Environmental:		Date	
Other (specify):	J.L. Struven, Traffic Signing	Date	8/2/07
Other (specify):		Date	
District Prior Approval By:		Date	
HQ (Issue, Approve) By:		Date	
Resident Engineer's Signature:		Date	10/16/07

ESTIMATE OF COST

	THIS REQUEST	TOTAL TO DATE
ITEMS	$0.00	$0.00
FORCE ACCOUNT	$0.00	$0.00
AGREED PRICE	$0.00	$0.00
ADJUSTMENT	$0.00	$0.00
TOTAL	$0.00	$0.00

FEDERAL PARTICIPATION

☐ PARTICIPATING ☐ PARTICIPATING IN PART ☐ NONE
☐ NON-PARTICIPATING (MAINTENANCE) ☑ NON-PARTICIPATING

FEDERAL SEGREGATION (if more than one Funding Source or P.I.P. type)
☑ CCO FUNDED PER CONTRACT ☐ CCO FUNDED AS FOLLOWS

FEDERAL FUNDING SOURCE PERCENT

ADA Notice: For individuals with sensory disabilities, this document is available in alternate formats. For information call: (916) 654-6410 or TDD (916) 654-3880 or write Records and Forms Management, 1120 N Street, MS-89, Sacramento, CA 95814.

STATE OF CALIFORNIA - DEPARTMENT OF TRANSPORTATION

CONTRACT CHANGE ORDER

Change Requested by: Engineer

CCO 4	Suppl. No. 0	Contract No. 04 - 0120L4	Road ALA-80-1.6/2.7	FED. AID LOC.: NO FED AID

To: **M C M CONSTRUCTION INC**

You are directed to make the following changes from the plans and specifications or do the following described work not included in the plans and specifications for this contract. ***NOTE: This change order is not effective until approved by the Engineer.***

Description of work to be done, estimate of quantities and prices to be paid. (Segregate between additional work at contract price, agreed price and force account.) Unless otherwise stated, rates for rental of equipment cover only such time as equipment is actually used and no allowance will be made for idle time. This last percentage shown is the net accumulated increase or decrease from the original quantity in the Engineer's Estimate.

Extra Work at Lump Sum:

Provide bidders compensation per Section 2-1.06, "Bidders Compensation," of the Special Provisions. The Department w compensate the Contractor for bidders compensation and will reimburse the Contractor for payment of bidders compensation to the second and third low bidders, in conformance with the provisions of Section 9-1.03B of the Standard Specifications, except that no mark up will be added.

Low bidder MCM Construction Inc. shall be compensated the lump sum amount of $200,000.00. This sum constitutes full compensation, including markups.

The Department has made a determination that the bids for the second and third low bidders, FCI Constructors/Manson Construction a Joint Venture, and Tutor Saliba Corporation, were responsive and therefore the second and third low bidders are eligible for bidders compensation in the amount of $200,000.00 for each bidder.

The Contractor shall provide the Department proof of payment to the second and third low bidders by invoices in accordance with the provisions of Section 9-1.03B, "Work Performed by Special Forces or Other Special Services," of the Standard Specifications within 5 days of the payments. The Department will issue compensation for the second and third low bidders on the next progress pay estimate following receipt of proof of payment.

Estimated cost of Extra Work at Lump Sum $600,000.00

Estimated Cost: Increase ☑ **Decrease** ☐ **$600,000.00**

By reason of this order the time of completion will be adjusted as follows: 0 days

Submitted by

Signature	Resident Engineer Ben Ghafghazi	Date 9/12/07

Approval Recommended by

Signature	Construction Engineer Ben Ghafghazi	Date 9/12/07

Engineer Approval by

Signature	Construction Manager Amer Bata	Date 9/21/07

We the undersigned contractor, have given careful consideration to the change proposed and agree, if this proposal is approved, that we will provide all equipment, furnish the materials, except as may otherwise be noted above, and perform all services necessary for the work above specified, and will accept as full payment therefor the prices shown above.

NOTE: If you, the contractor, do not sign acceptance of this order, your attention is directed to the requirements of the specifications as to proceeding with the ordered work and filing a written protest within the time therein specified.

Contractor Acceptance by

Signature	(Print name and title) EDMUNDO A. PUCHI, TREASURER	Date 9/19/07

STATE OF CALIFORNIA - DEPARTMENT OF TRANSPORTATION

CONTRACT CHANGE ORDER MEMORANDUM

DATE: 9/11/2007

TO: AMER BATA / BEN GHAFGHAZI	FILE: E.A. 04 - 0120L4
FROM: BEN GHAFGHAZI	CO-RTE-PM ALA-80-1.6/2.7
	FED. NO. NO FED AID
CCO#: 4 SUPPLEMENT#: 0 Category Code: **AWZZ**	CONTINGENCY BALANCE (incl. this change) **$18,351,741.54**
COST: **$600,000.00** INCREASE ☑ DECREASE ☐	HEADQUARTERS APPROVAL REQUIRED? ☐ YES ☑ NO
SUPPLEMENTAL FUNDS PROVIDED: **$600,000.00**	IS THIS REQUEST IN ACCORDANCE WITH ENVIRONMENTAL DOCUMENTS? ☑ YES ☐ NO
CCO DESCRIPTION: Bidders Compensation	**PROJECT DESCRIPTION:** Construct bridge, roadway, building and electrical system.

Original Contract Time:	Time Adj. This Change:	Previously Approved CCO Time Adjustments:	Percentage Time Adjusted: (including this change)	Total # of Unreconciled Deferred Time CCO(s): (including this change)
650 Day(s)	0 Day(s)	0 Day(s)	0 %	0

THIS CHANGE ORDER PROVIDES FOR:

Providing bidders compensation per Section 2-1.06, "Bidders Compensation," of the Special Provisions. The Department shall compensate the Contractor for payment of bidders compensation to the second and third low bidders in conformance with the provisions of Section 9-1.03B, "Work Performed by Special Forces or Other Special Services," of the Standard Specifications, except that no mark up will be added, and the Department will pay the Contractor $200,000 as bidder compensation to the low bidder.

Low bidder MCM Construction Inc. shall be compensated the sum of $200,000.00; this sum constitutes full compensation, including markups. Second and third low bidders, FCI Constructors/Manson Construction a Joint Venture, and Tutor Saliba Corporation, shall be compensated the sum of $200,000.00 each; this sum constitutes full compensation, including markups.

This work is not covered by any contract items. Therefore, payment for the Extra Work will be a Lump Sum of $600,000.00, which can be financed from supplemental funds of which $600,000.00 were allotted for this work.

No cost analysis is warranted since this compensation amount is detailed in Section 2-1.06, "Bidders Compensation," of the Special Provisions.

Design and Maintenance concurrence is not necessary since this change order is for compensation only and is included in the contract documents.

No adjustment of contract time is warranted, as this change does not affect the controlling operation.

CONCURRED BY:		
Construction Engineer:	Ben Ghafghazi	Date 8/10/07
Bridge Engineer:		Date
Project Engineer:		Date
Project Manager:		Date
FHWA Rep.:		Date
Environmental:		Date
Other (specify):		Date
Other (specify):		Date
District Prior Approval By:		Date
HQ (Issue Approve) By:		Date
Resident Engineer's Signature:		Date 9/12/07

ESTIMATE OF COST

	THIS REQUEST	TOTAL TO DATE
ITEMS	$0.00	$0.00
FORCE ACCOUNT	$0.00	$0.00
AGREED PRICE	$600,000.00	$600,000.00
ADJUSTMENT	$0.00	$0.00
TOTAL	$600,000.00	$600,000.00

FEDERAL PARTICIPATION

☐ PARTICIPATING ☐ PARTICIPATING IN PART ☑ NONE
☐ NON-PARTICIPATING (MAINTENANCE) ☐ NON-PARTICIPATING

FEDERAL SEGREGATION (if more than one Funding Source or P.I.P. type)
☑ CCO FUNDED PER CONTRACT ☐ CCO FUNDED AS FOLLOWS

FEDERAL FUNDING SOURCE	PERCENT

CONTRACT CHANGE ORDER

Change Requested by: Engineer

CCO: 5	Suppl. No. 0	Contract No. 04- 0120L4	Road ALA-80-1.6/2.7	FED. AID LOC.: NO FED AID

To: **M C M CONSTRUCTION INC**

You are directed to make the following changes from the plans and specifications or do the following described work not included in the plans and specifications for this contract. ***NOTE: This change order is not effective until approved by the Engineer.***

Description of work to be done, estimate of quantities and prices to be paid. (Segregate between additional work at contract price, agreed price and force account.) Unless otherwise stated, rates for rental of equipment cover only such time as equipment is actually used and no allowance will be made for idle time. This last percentage shown is the net accumulated increase or decrease from the original quantity in the Engineer's Estimate.

Adjustment of Compensation at Unit Price:

For the property herein referred to as the "MCM Area", to be used by MCM as a Field Office at the Pier 7 location shown on page 2 of 8 of this contract change order, MCM shall compensate the State at the agreed unit price of $0.17 per square foot per month from August 10, 2007 through October 10, 2009. Contractor shall comply with conditions stipulated in attached lease (as pages 3 through 7 of this change order), exhibit A. Contractor will not occupy any ESA as shown on exhibit B (page 3 of 8 of his contract channge order).

If additional time is required beyond October 10, 2009, a price adjustment reflecting current market value will be negotiated.

Estimate of Adjustment of Compensation at Agreed Unit Price:

2,800 sq ft @ $0.17/month = $476.00/month (credit)
26 months @ $476.00/month = $12,376.00 (credit)
Water credit will be $14.54/month (based on 4 people at 15 gallons per day) = $14.54 (credit)
26 months@ $14.54/month = 378.04 (credit)
Total monthly Cost = $ 490.54 (credit)
Total Cost = $12,754.04 (credit)

The State will be compensated the agreed unit price of $490.54 per month during the terms of this agreement.

Adjustment of Compensation at Agreed Unit Price .....($12,754.04)

Estimated Cost: **Increase** ☐ **Decrease** ☑ **($12,754.04)**

By reason of this order the time of completion will be adjusted as follows: 0 days

Submitted by

Signature	Resident Engineer BEN GHAFGHAZI	Date 8/14/07

Approval Recommended by

Signature	Construction Engineer Ben Ghafghazi	Date 8/20/07

Engineer Approval by

Signature	Construction Manager Amer Bata	Date 9/21/07

We the undersigned contractor, have given careful consideration to the change proposed and agree, if this proposal is approved, that we will provide all equipn furnish the materials, except as may otherwise be noted above, and perform all services necessary for the work above specified, and will accept as full paymer therefor the prices shown above.

NOTE: If you, the contractor, do not sign acceptance of this order, your attention is directed to the requirements of the specifications as to proceeding with the ordered work and filing a written protest within the time therein specified.

Contractor Acceptance by

Signature	(Print name and title) Edmundo A. Ruchi, Treasurer	Date 8-14-2007

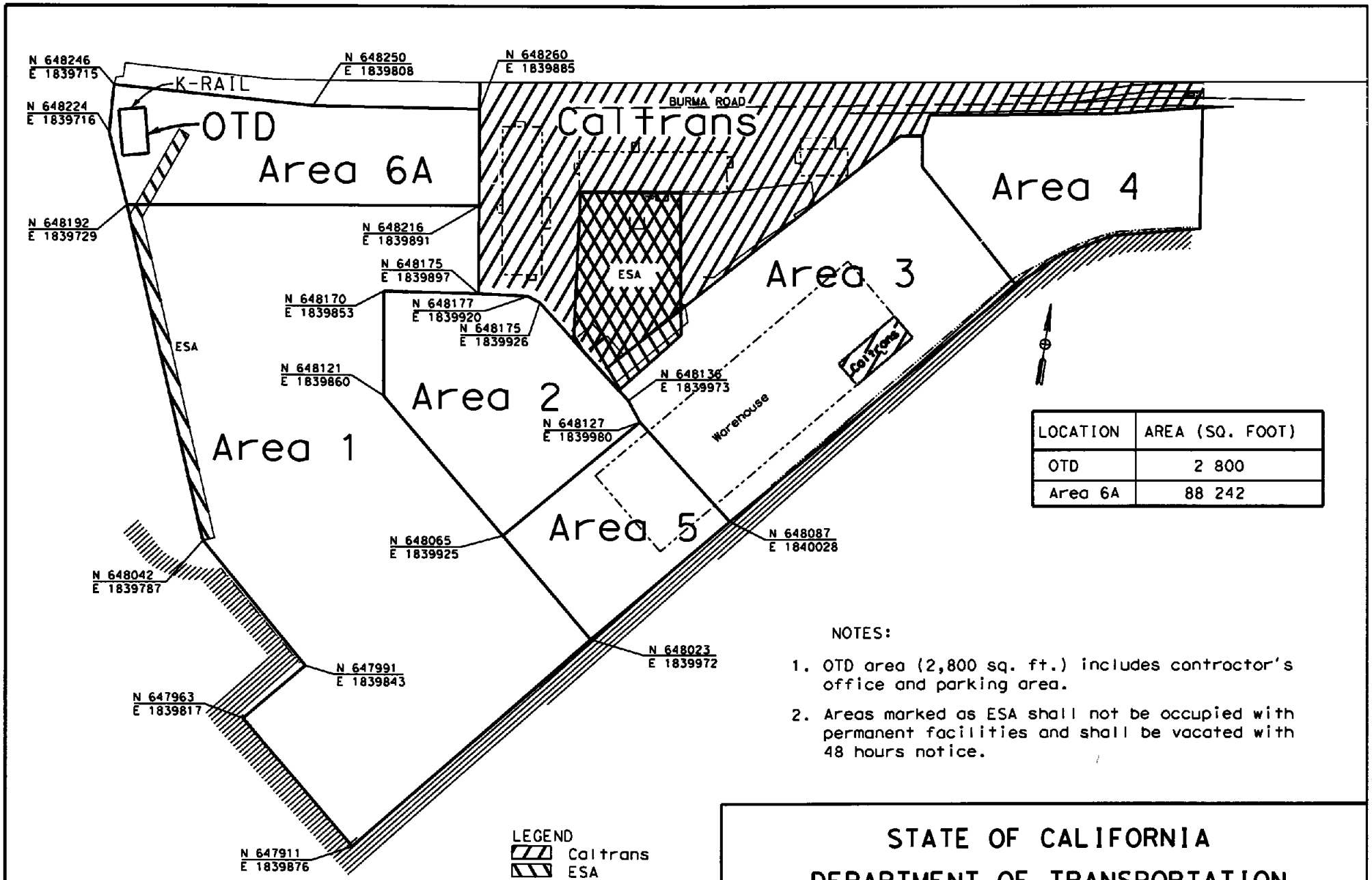

LOCATION	AREA (SQ. FOOT)
OTD	2 800
Area 6A	88 242

NOTES:

1. OTD area (2,800 sq. ft.) includes contractor's office and parking area.
2. Areas marked as ESA shall not be occupied with permanent facilities and shall be vacated with 48 hours notice.

CCO NO. 5
PAGE 2 OF 8

EXIBIT B

STATE OF CALIFORNIA
DEPARTMENT OF TRANSPORTATION
DISTRICT 4 TOLL BRIDGE PROGRAM

PIER 7-AREAS FOR CONTRACTOR'S USE
CONTRACT NO. 04-0120L4

...\pier 7 leased area OTD.dgn 08/14/2007 09:08:29 AM

CONFIDENTIAL
This document contains personal information and pursuant to Civil Code 1798.21 it shall be kept confidential in order to protect against unauthorized disclosure.

District	County	Route	K.P.
04	Ala	80	1.6/2.7
Deed Number: 058277			
Project Number: 0120L4			

THIS LEASE is made and entered into this 10th day of August, 2007, in Oakland, California, by and between the State of California Department of Transportation, hereinafter known as Lessor, and MCM Construction Inc. hereinafter known as Lessee, whose address is P.O. Box 620, North Highlands CA 95660.

WITNESSETH

1) **DESCRIPTION:** The Lessor, in consideration of the payment of the rent hereinafter specified to be paid by the Lessee, and the covenants and agreements herein contained, does hereby lease, demise, and let unto Lessee that certain property in the County of Alameda, State of California, the address of which is Pier 7, shown as outlined in red on the attached map marked as "Exhibit A." including the following improvements: None

2) **TERM:** This lease shall be for a term of 26.0 months, commencing on the 1st day of August 10, 2007 and ending on the 10th day of September, 2009, with the right of cancellation and termination in both Lessor and Lessee as hereinafter set forth.

3) **RENT:** The rent shall be paid by the Lessee monthly, in advance, on the 1st day of each month during said term, in lawful money of the United States, as follows: $490.54 per month. If additional time is required beyond October 10, 2009 a price adjustment reflecting current market value will be negotiated.

   Rent payable or refundable hereunder for any period of time less than one month shall be determined by prorating the monthly rental herein specified based on a 30-day month.

4) **RECEIPT OF RENT PAID:** Receipt is hereby acknowledged by the Lessor of the sum of $476 from the Lessee, in payment for the first month's rental under this lease.

5) **Deleted**

6) **RENTAL PAYMENTS:** All rental payments shall be made in accordance with the provisions outlined in attached "Exhibit A".
7) Deleted
8) Deleted

9) **UTILITIES:** Lessee shall pay when due all water, electric, gas, and other lighting, heating, and power, rents and charges accruing or payable in connection with said property during the term of this lease.

10) **USE:**

a) Lessee shall use the property for the following purposes only:
   i) Erect and maintain an administration office and parking for employees of the MCM Construction Inc..
   ii) Store material and perform fabrication for elements required for the Oakland Touchdown I Project.
b) Lessee shall not commit, suffer, or permit any waste on said property.
c) Lessee shall comply with all State laws and local ordinances concerning said property and the use thereof.

11) **RIGHT OF ENTRY:** Lessee shall permit Lessor or its agents to enter upon the property at any reasonable time.

12) **TERMINATION:** This lease shall be subject to cancellation and termination by either party at any time during the term hereof by giving the other party notice in writing at least 30 days next prior to the date when such termination shall become effective.

13) **NOTICES:** All notices herein provided to be given, or which may be given, by either party to the other, shall be deemed to have been fully given when served personally, or when made in writing and mailed addressed as follows: To Lessee at the address above stated and to Lessor c/o Department of Transportation, at 345 Burma Road Oakland, CA 94607.. The address to which the notices shall be mailed to either party shall be changed by written notice by either party to the other, but nothing herein shall preclude the giving of notice by personal service. Lessor shall also be able to serve notices by posting and subsequent mailing to Lessee.

14) **CONDITION AND REPAIRS:** Lessee shall not call on Lessor to make any improvements or repairs on the property, but Lessee hereby specifically covenants and agrees to keep the property including furnishings and equipment, if applicable, in good order and condition at Lessee's cost and expense. Lessee further agrees to provide an adequate number of garbage and trash receptacles in clean condition and good repair. Lessor agrees to maintain the exterior walls, roof, main sewer and water service lines to building, and any other major repairs as deemed necessary and in the best interest of Lessor.

15) **ASSIGNMENT AND SUBLETTING:** Lessee shall not assign or sublet this lease without Lessor's written consent.

Any request by Lessee to assign this lease shall be subject to the following:

a) An assignment will only be allowed to a person or entity of equal or greater financial responsibility than Lessee.
b) The proposed use must be the same or similar to that employed by Lessee.
c) A written application from the proposed assignee is required. Lessee will pay all charges incurred for verifying information in the application process.
d) Lessor has the right to raise the rent to current market value upon Lessee's exercise of a right to assign.
e) Assignment does not relieve the Lessee of any duties or obligations under the lease.
f) Any assignment is not deemed a consent to any subsequent assignment.

16) **ALTERATIONS:** Lessee shall not make or suffer any alteration to be made in or on the property without Lessor's written consent.

17) **LITIGATION COSTS:** In the event that a suit is necessary to enforce any of the provisions herein contained, or to recover possession of the premises, the prevailing party shall be entitled to reasonable attorney's fees in addition to costs and necessary disbursements.

18) **VACATING THE PROPERTY:** At the expiration of the term, or any sooner termination of this lease, Lessee shall quit and surrender possession of the property and its appurtenances to Lessor in as good order and condition as the property was delivered to the Lessee, reasonable wear and tear and damage by the elements excepted.

19) **HOLD OVER:** Should Lessee hold over after the expiration of the term of this lease with Lessor's consent, express or implied, the tenancy shall be deemed to be a tenancy only from month to month, subject otherwise to all the terms and conditions of this lease so far as applicable.

20) **FIRE INSURANCE:** Lessor will not keep the property insured against fire or any other insurable risk, and Lessee will make no claim of any nature against Lessor by reason of any damage to Lessee's property in the event it is damaged or destroyed by fire or by any other cause.

21) **PREVIOUS AGREEMENTS:** In the event there is any existing lease or rental agreement between Lessee and Lessor (or its predecessor in interest) covering the property, it is agreed and understood that this lease shall cancel and terminate said prior lease or rental agreement as of the effective date of this lease.

22) **RELOCATION PAYMENT:** Lessee acknowledges the following: Lessee commenced occupancy of the premises after Lessor acquired title to it, Lessor acquired the premises for a public project, Lessee may be required to vacate the premises to allow construction of the public project, and Lessee is not entitled to receive any payments under either the state or the federal Uniform Relocation Assistance Act. (Gov. Code, Section 7260, et seq.; 42 U.S.C., Section 4601, et seq.)

23) **POSSESSORY INTEREST:** Lessee' s interest is subject to a possessory interest tax (tax) that may be imposed by the City or County. However, Lessor is required to pay any such tax directly to the City or County on Lessee's behalf. The amount of rent charged Lessee reflects the cost of this added responsibility to Lessor.

Tax bills inadvertently received by Lessee should be forwarded to Lessor for payment.

24) **INDEMNIFICATION:** Lessee shall indemnify, defend, and hold the Lessor, its officers, agents and employees harmless from and against any loss, cost, or expense, including, but not limited to, attorney fees and court costs, resulting from any claim by any third party arising out of or connected to the actions of Lessee, notwithstanding Lessor's, its officers' agents' and employees' active or passive negligence, and/or regarding all acts and omission, including but not limited, to the willful misconduct or negligence of Lessee.

Further, it is the parties intent that the indemnity provisions stated herein, apply to losses resulting from Lessee's negligence or any cause other than the willful misconduct or sole negligence of Lessor, its officers, agents or employees.

25) **LIABILITY AND PROPERTY DAMAGE INSURANCE:** Lessee shall, at Lessee's expense, take out and keep in force during the within tenancy:

General liability insurance providing coverage in the amount of $1,000,000 per occurrence for Bodily Injury and Property Liability combined, in a company or companies to be approved by the Lessor, to protect Lessor, its officers, agents and employees against all claims, suits or actions of every name, kind, and description brought forth, or on account of, injuries to or death of any person occurring in or about the property or on account of damage to property incident to the use of, or resulting from, any and every cause occurring in or about the property which is the subject of this lease, including any and all claims, suits or actions for damage to vehicles on the property.

With respect to third-party claims against Lessee, Lessee waives any and all rights to any type of express or implied indemnity against Lessor, its officers or employees.

It is the intent of the parties that Lessee will indemnify, defend and hold harmless the Lessor, its officers and employees from any and all claims, suits or actions as set forth above regardless of the existence or degree of fault or negligence on the part of Lessor, Lessee, the officers or employees of either of these, other than the sole negligence of Lessor, its officers and employees.

Nothing in this lease is intended to create the public or any member thereof a third-party beneficiary hereunder, nor is any term or condition or other provision of the lease intended to establish a standard of care owed to the public or any member thereof.

Said policies shall name Lessor as an additional insured and shall inure to the contingent liabilities, if any, of Lessor and the officers, agents and employees of Lessor and shall obligate the insurance carriers to notify Lessor, in writing, not less than thirty (30) days prior to the cancellation thereof, or any other change affecting the coverage of the policies. Lessee shall furnish to Lessor either a certified copy of each and every such policy or a fully executed "CERTIFICATE OF INSURANCE WITH ENDORSEMENT FOR LEASE OF STATE-OWNED PROPERTY" within not more than ten (10) days after the effective date of the policy. Lessee agrees that if Lessee does not keep such insurance in full force and effect, Lessor shall have the right to immediately terminate this lease.

26) **NONDISCRIMINATION:** The Lessee, for himself, his heirs, personal representatives, successors in interest, and assigns as a part of the consideration hereof, does hereby covenant and agree, as a covenant running with the land, that Lessee shall maintain and operate any facilities on the land or services offered thereon in compliance with all other requirements imposed pursuant to Title 49, Code of Federal Regulations, Department of Transportation, Subtitle A, Office of the Secretary, Part 21, Nondiscrimination in federally assisted programs of the Department of Transportation-Effectuation of Title VI of the Civil Rights Act of 1964, and as said Regulations may be amended.

That in the event of breach of any of the above nondiscrimination covenants, the State of California shall have the right to terminate the lease and to re-enter and repossess said land and the facilities thereon and hold the same as if said lease had never been made or issued.

27) **WAIVER:** If any part of this Lease is invalid by reason of law or governmental regulation, or if any provisions hereof are waived by Lessor, the remaining portions of this Lease shall remain in full force and effect. Lessor's receipt of rent with the knowledge of any breach of a provision of this Lease shall not constitute a waiver of such breach.

28) **ENCUMBRANCES:** Lessee shall not encumber the leased premises in any manner whatsoever.

29) **ASSIGNMENT FOR BENEFIT OF CREDITORS, INSOLVENCY, OR BANKRUPTCY:** Appointment of a receiver to take possession of Lessee's assets, Lessee's general assignment for benefit of creditors, or Lessee's insolvency or taking or suffering action under the Bankruptcy Act is a breach of this lease and this lease shall terminate.

30) **POSTING OF PROPERTY:** Lessor or its agents shall at all times have right to go upon and inspect the leased property and to serve or to post thereon any notice required or permitted by law for protection of any right or interest of Lessor.

31) **HAZARDOUS MATERIALS:** Hazardous materials are those substances listed in California Code of Regulations, Title 22, Section 66261.126, Appendix X, or those which meet the toxicity, reactivity, corrosivity or flammability criteria of Article 11 of the above Code, as well as any other substance which poses a hazard to health or environment.

Except as otherwise permitted in this lease, Lessee shall not use, create, store or allow any such substances on the premises. Fuel stored in a motor vehicle for the exclusive use in such vehicle is excepted.

In no case shall Lessee cause or allow the deposit or disposal of any such substance on the leased property. However, household products necessary for routine cleaning and maintenance of the property may be kept on the leased premises in quantities reasonable for current needs.

Lessor, or its agents or contractors, shall at all times have the right to go upon and inspect the leased premises and the operations conducted thereon to assure compliance with the requirements herein stated. This inspection may include taking samples of substances and materials present for testing, and/or testing soils or underground tanks on the premises.

The following substances may be present on the leased premises, provided that they are contained and used in accordance with all applicable local, State and Federal laws and regulations as well as the requirements set forth below:

Please see attached "Exhibit A"

Where hazardous waste is generated on site, the facility must be fully permitted by the California Department of Health Services, and all conditions of the permit must be complied with.

Breach of any of these covenants, terms and conditions shall give Lessor authority to immediately terminate this lease. It is the intent of the parties hereto that Lessee shall be responsible for and bear the entire cost of removal and disposal of hazardous materials or waste introduced to the premises during Lessee's period of use and possession as owner, operator or Lessee of the property. Lessee shall also be responsible for any cleanup and decontamination on or off the leased premises necessitated by such materials or waste.

Lessee shall further hold the State, and any officer or employee, harmless from all responsibility, liability and claim for damages resulting from the presence or use of hazardous materials on the premises during Lessee's period of use and possession.

32) **AMENDMENTS:** Anything herein contained to the contrary notwithstanding, this lease may be terminated, and the provisions of this lease may be, in writing, altered, changed, or amended by mutual consent of the parties hereto.

33) **HEADINGS:** The marginal or clause headings of this lease are not a part of this lease and shall have no effect upon the construction or interpretation of any part hereof.

34) **THIS LEASE IS SUBJECT TO ALL TERMS OF THE CONTRACT CHANGE ORDER ATTACHED AS "EXHIBIT A".**

BREACH OF ANY OF THE ABOVE COVENANTS, TERMS, AND CONDITIONS SHALL GIVE EITHER PARTY AUTHORITY TO IMMEDIATELY TERMINATE THIS LEASE.

STATE OF CALIFORNIA
DEPARTMENT OF TRANSPORTATION

_____ Date
MIKE FORNER
Construction Manager SFOBB (Lessor)

ED PUCHI for Ed Puchi
Treasurer, MCM Construction Inc. (Lessee)
Gregory Allen

STATE OF CALIFORNIA - DEPARTMENT OF TRANSPORTATION

CONTRACT CHANGE ORDER MEMORANDUM

TO: AMER BATA / BEN GHAFGHAZI	FILE: E.A. 04 - 0120L4
FROM: BEN GHAFGHAZI	CO-RTE-PM ALA-80-1.6/2.7
	FED. NO. NO FED AID
CCO#: 5 SUPPLEMENT#: 0 Category Code: AXZZ	CONTINGENCY BALANCE (incl. this change) $18,339,320.54
COST: ($12,754.04) INCREASE ☐ DECREASE ☑	HEADQUARTERS APPROVAL REQUIRED? ☐ YES ☑ NO
SUPPLEMENTAL FUNDS PROVIDED: $0.00	IS THIS REQUEST IN ACCORDANCE WITH ENVIRONMENTAL DOCUMENTS? ☑ YES ☐ NO
CCO DESCRIPTION: MCM Property Lease	**PROJECT DESCRIPTION:** Construct bridge, roadway, building and electrical system.

Original Contract Time:	Time Adj. This Change:	Previously Approved CCO Time Adjustments:	Percentage Time Adjusted: (including this change)	Total # of Unreconciled Deferred Time CCO(s): (including this change)
650 Day(s)	0 Day(s)	0 Day(s)	0 %	0

THIS CHANGE ORDER PROVIDES FOR:

Leasing space to MCM Construction Inc. on Pier 7 for use as administrative offices. (see Exhibit B, sheet 2 of 8 of the CCO).

Conditions pertaining to the use of the Pier 7 property are contained in "Settlement Agreement Regarding Burma Road Easement (Deed No. 2002072864) and Pier 7 Temporary Construction Easement (Deed No. 2002072862, Oakland Army Base)," dated April 17, 2002 ("The Agreement")(see Exhibit A, sheets 3 through 8 of the CCO). A monthly rate $0.17 per square foot will be paid to the State by the Contractor. This rate has been determined by Caltrans Right of Way Department.

Pier 7 has areas of known hazardous substances contamination, referred to as ESA's on Exhibit B. No permanent facilities shall be allowed in these areas. All items occupying this ground shall be portable enough to move within 48 hours notice. In addition there will be ongoing environmental assessment as the build out continues. MCM will cooperate with Caltrans in conducting environmental assessments.

It is to be clearly understood that no modifications to the leased property or the common access roadway shall be performed without prior approval from the Engineer.

Water usage will be a credit to the State based on 15 gallons per person per day (based on AWWA guide lines). Assuming 21 workdays per month for 26 months, total usage would be 15 gpdpp x 21 days per month x 26 month x 4 people/ 780 gallons per unit = 42 units. Water is $9.00/unit for a total water cost of $ 378.00 or $ 14.54/month.

Power will also have to be arranged with either the Skyway or SAS contractors because Caltrans is buying power from them at this point. MCM will make their own arrangements for sewer.

Total credit to the State is $12,754.04.

Prior approval for this change was obtained from Principal Engineer Mike Forner and Area Construction Manager Amer Bata. This change has been discussed and concurred with Mark Shindler of Right of Way and Ken Terpstra, Project Manager. Maintenance concurrence is not required because this work is not related to any permanent Caltrans facility.

No adjustment of contract time is warranted by this change.

CONCURRED BY:			
Construction Engineer:	Ben Ghafghazi	Date	8/10/07
Bridge Engineer:		Date	
Project Engineer:		Date	
Project Manager:	Ken Terprtra	Date	8/10/07
FHWA Rep.:		Date	
Environmental:		Date	
Other (specify):	Mark Shindler	Date	8/7/07
Other (specify):		Date	
District Prior Approval By:	Mike Forner	Date	8/10/07
HQ (Issue Approve) By:		Date	
Resident Engineer's Signature:		Date	9/12/07

ESTIMATE OF COST

	THIS REQUEST	TOTAL TO DATE
ITEMS	$0.00	$0.00
FORCE ACCOUNT	$0.00	$0.00
AGREED PRICE	$0.00	$0.00
ADJUSTMENT	($12,754.04)	($12,754.04)
TOTAL	($12,754.04)	($12,754.04)

FEDERAL PARTICIPATION

☐ PARTICIPATING ☐ PARTICIPATING IN PART ☐ NONE
☐ NON-PARTICIPATING (MAINTENANCE) ☑ NON-PARTICIPATING

FEDERAL SEGREGATION (if more than one Funding Source or P.I.P. type)
☐ CCO FUNDED PER CONTRACT ☐ CCO FUNDED AS FOLLOWS

FEDERAL FUNDING SOURCE	PERCENT

STATE OF CALIFORNIA - DEPARTMENT OF TRANSPORTATION

CONTRACT CHANGE ORDER

Change Requested by:

CCO 6	Suppl. No. 0	Contract No. 04 - 0120L4	Road ALA-80-1.6/2.7	FED. AID LOC.: NO FED AID

To: **M C M CONSTRUCTION INC**

You are directed to make the following changes from the plans and specifications or do the following described work not included in the plans and specifications for this contract. ***NOTE: This change order is not effective until approved by the Engineer.***

Description of work to be done, estimate of quantities and prices to be paid. (Segregate between additional work at contract price, agreed price and force account.) Unless otherwise stated, rates for rental of equipment cover only such time as equipment is actually used and no allowance will be made for idle time. This last percentage shown is the net accumulated increase or decrease from the original quantity in the Engineer's Estimate.

Per Special Provisions Section 5-1.40, "Owner Controlled Insurance Program (OCIP)," Subsection, "Contractor Insurance Cost Deduction," this change order establishes the default OCIP deduct rate at eight percent (8%) to be applied to each Contractor progress payment.

The default OCIP deduct rate will be adjusted in accordance with Special Provisions Section 5-1.40, "Owner Controlled Insurance Program (OCIP)," Subsection, "Contractor Insurance Cost Deduction."

Per Special Provisions Section 5-1.40, "Owner Controlled Insurance Program (OCIP)," Subsection, "Contractor Insurance Cost Deduction," this change order is executed by the Department.

Contractor signature is not required.

Estimated Cost: Increase ☐ **Decrease** ☐ **$0.00**

By reason of this order the time of completion will be adjusted as follows: 0 days

Submitted by

Signature	Resident Engineer BEN GHAFGHAZI	Date 9/5/07

Approval Recommended by

Signature	Construction Engineer Ben Ghafghazi	Date 9/5/07

Engineer Approval by

Signature	Date 9/6/07

We the undersigned contractor, have given careful consideration to the change proposed and agree, if this proposal is approved, that we will provide all equipment, furnish the materials, except as may otherwise be noted above, and perform all services necessary for the work above specified, and will accept as full payment therefor the prices shown above.

NOTE: If you, the contractor, do not sign acceptance of this order, your attention is directed to the requirements of the specifications as to proceeding with the ordered work and filing a written protest within the time therein specified.

Contractor Acceptance by

Signature Not Required	(Print name and title)	Date

5-1.40 OWNER CONTROLLED INSURANCE PROGRAM (OCIP)

The Contractor's obligations regarding the requirements for insurance shall conform to these special provisions.

GENERAL

Section 7-1.12B, "Insurance," of the Standard Specifications, and Section 3-1.025, "Insurance Policies," of the Amendments to the July 1999 Standard Specifications do not apply. References to the insurance requirements in Section 7-1.12, "Indemnification and Insurance," of the Standard Specifications shall be interpreted as references to "Owner Controlled Insurance Program (OCIP)," of these special provisions.

The Department has elected to implement an Owner Controlled Insurance Program (OCIP). The Department will administer the OCIP with the assistance of an OCIP Administrator. An OCIP is a series of insurance polices issued by one or more insurance companies to cover the enrolled Contractor and eligible subcontractors of all tiers on a given contract.

An OCIP Manual describing the program and guidelines, regarding Owner Controlled Insurance Program (OCIP), is available as part of the information handout as specified in "Project Information," of these special provisions. In the event of any conflict or discrepancy between any of the documents, the OCIP special provisions supersede the OCIP Manual or other program documents other than the insurance policies. The policies supersede all other documents with regard to coverage under the program.

Nothing in the contract is intended to establish a standard of care owed to any member of the public or to extend to the public the status of a third-party beneficiary for any of these insurance specifications. The OCIP requirements contained in this section , "Owner Controlled Insurance Program (OCIP)," do not create any contractual relationship between the subcontractors and the Department. The Contractor shall be responsible for compliance with the requirements of this section , "Owner Controlled Insurance Program (OCIP)," including compliance by its enrolled and by its excluded subcontractors of all tiers.

Changes to any OCIP requirement or procedure during or after the bid process shall be approved by the Department or the Engineer, as applicable. No contractor or subcontractor has the authority to change any OCIP requirements.

ELIGIBILITY AND ENROLLEMENT IN THE OCIP

Participation in the OCIP is mandatory for all eligible contractors, but not automatic. Eligible contractors include all contractors and subcontractors providing direct labor on the project site. Temporary labor services and employee leasing companies are to be treated as eligible contractors. The Department retains the right to determine eligibility. Each eligible contractor must follow the enrollment procedures shown in the Department's OCIP Manual. Upon OCIP enrollment completion and issuance of evidence of OCIP insurance, an eligible contractor will become an enrolled contractor.

Excluded contractors include:

A. Architects, engineers, surveyors, soil testing companies, and their consultants,
B. Hazardous waste removal and transport companies,
C. Suppliers that do not perform or subcontract installation, vendors, material dealers,
D. Guard services, non-construction janitorial services,
E. Truckers (including trucking to the project where delivery is the only scope of work performed), haulers, drivers, and others who merely transport, pick up, deliver or carry materials, personnel, parts, equipment to or from the job site,
F. Any other parties that the Department at its sole discretion elects to exclude from the OCIP even if otherwise eligible.

Excluded subcontractors are required to provide their own insurance according to requirements specified in "Contractor Furnished Insurance," of this section, "Owner Controlled Insurance Program (OCIP)." The OCIP does not provide coverage for excluded parties, even if erroneously enrolled in the OCIP. The Department, at its sole discretion, may exclude any party from enrollment in the OCIP, even if the party otherwise meets the requirements for eligibility as defined above.

Eligible Contractors and subcontractors shall maintain their own insurance for coverages not provided under the OCIP policies until completion and final acceptance of the work. Required coverage types and limits are specified in "Contractor-Furnished Insurance," of this section, "Owner Controlled Insurance Program (OCIP)." Such required coverage types and limits do not limit contractors and subcontractors under the indemnity provisions of Section 7-1.12A, "Indemnification," of the Standard Specifications.

Before its mobilization on-site, the Contractor shall furnish the Engineer certificates of insurance evidencing that all required insurance is in force. The OCIP insurance company reserves the right to reject late OCIP enrollments. If there have been losses in a period during which a subcontractor delayed its enrollment, the OCIP will not furnish coverage to the subcontractor for such losses.

The Contractor and subcontractors of all tiers shall adhere to and perform all reporting and administrative requirements as detailed in the Department's OCIP Manual and this Section, "Owner Controlled Insurance Program (OCIP)."

INSURANCE UNDER THE OCIP

The Department will provide general liability, excess liability and workers' compensation insurance, including Longshore and Harbor Workers Compensation coverage (LHWCA), coverage for exposures of the Merchant Marine Act of 1920 (Jones Act) (if any), and coverage for exposures of the Death on the High Seas Act (DOHSA) (if any), covering work performed by enrolled contractors under this contract. This section contains some general descriptions of the coverages. Contractors and subcontractors should consult the actual policies for coverage details. Policies will be provided to contractors and subcontractors upon request.

The Department will pay all premiums associated with the OCIP, thereby providing the enrolled Contractor and subcontractors of all tiers insurance coverage as specified in "Insurance Provided by the Department," of this section, "Owner Controlled Insurance Program (OCIP)."

An OCIP does not constitute any representation by the Department with respect to the adequacy of the insurance to protect the Contractor or its subcontractors against all obligations imposed by law or by this contract. The coverage, as with all insurance, is limited in scope and may not include all insurance coverages the Contractor or its subcontractors may deem necessary. The Contractor agrees that the Department and the OCIP Administrator are not agents, partners or guarantors of the OCIP Insurer(s) and that the Department is not responsible for any claims or disputes between or among the Contractor, the subcontractors, and any OCIP Insurer.

In addition to any insurance provided by the Department, all contractors are responsible for providing certain insurance as specified in "Contractor-Furnished Insurance," of this section, "Owner Controlled Insurance Program (OCIP)." It is the Contractor's responsibility to discuss the OCIP with its insurance agents, brokers or consultants and verify if any additional non-OCIP coverages are required.

Coverage under the OCIP applies to work under this contract performed on the job site as that term is defined herein. For purposes of the OCIP, "job site" shall be defined as the areas within the boundaries of the project and also includes areas adjacent to or nearby where incidental operations are performed, excluding permanent locations of the Contractor and any enrolled subcontractor, other than those areas approved by the Department or the Engineer, as applicable, and scheduled on the insurance policies, subject to approval of the OCIP Insurer(s). Work at the job site includes operations necessary or incidental to the project completion.

Off-site locations include the Contractor's and subcontractor of any tier's regularly established workplace, plant, factory, office, shop, warehouse, yard or other property. Areas adjacent to or nearby where incidental operations are performed may be covered only if they are solely dedicated to the performance of the contracted work. Unless approved by the Engineer and accepted and endorsed on the policy by the insurer, off-site locations will not be covered under the OCIP even if operations are for fabrications of materials to be used at the job site or training of apprentices.

Off-site operations of an enrolled contractor or subcontractor, including, without limitation, product manufacturing or product assembling, shall, if the Department so elects in the exercise of its sole discretion, be covered only if all such operations are: (1) solely dedicated to the performance of the contracted work; (2) approved in writing by Department; and (3) coverage thereof has been acknowledged in writing by the OCIP Administrator. It is the sole responsibility of the Contractor to notify the Department to request coverage for specified off-site operations.

The Department assumes no obligation to provide insurance coverages other than those summarized above and set forth in the actual OCIP Policies issued by the OCIP Insurer(s). The insurance provided under the OCIP will not extend coverage for products liability to any insured party or others such as vendors and suppliers, for any product manufactured, assembled or otherwise worked on away from the job site. Any other insurance required for protection of the Contractor or subcontractors is solely the responsibility and expense of Contractor and the subcontractors.

A. Insurance Provided By The Department

The Department will provide and maintain in force the types of insurance listed in this section, "Insurance Provided by the Department." The insurance company policy limits of liability, coverage terms, and conditions will determine the scope of coverage provided by the OCIP.

The Contractor and all eligible subcontractors of any tier will be enrolled in the OCIP upon completion and acceptance of the forms included in the OCIP Enrollment Package. Each enrolled contractor and subcontractor will receive a separate workers' compensation policy and a copy of the primary general liability policy. The policies may be amended from time to time. The enrolled Contractor and subcontractors of all tiers are bound by the terms of coverage as contained in the insurance policies.

The OCIP provides the following insurance coverages for the enrolled Contractor and subcontractors of all tiers as follows:

1. Workers' Compensation Insurance
   Workers compensation insurance shall be provided on a statutory basis. Employer's liability insurance shall be provided in amounts not less than:

   a. $1,000,000 for each accident for bodily injury by accident.
   b. $1,000,000 policy limit for bodily injury by disease.
   c. $1,000,000 for each employee for bodily injury by disease.

   Coverage shall include injury to the Contractors' employees under the U.S. Longshoremen's and Harbor Workers' Compensation Act, the Jones Act or under laws, regulations or statutes applicable to maritime employees.
2. General Liability Insurance
   Limits for bodily injury, including death arising from the bodily injury, and property damage:

   a. $2,000,000 for each occurrence;
   b. $4,000,000 aggregate for completed operations;
   c. $4,000,000 general annual aggregate.

   The general annual aggregate limit is annually reinstated each policy year. Defense coverage is outside of policy limits. Completed-operations coverage will be extended for 10 years beyond the earlier of contract acceptance or policy expiration. A single limit applies for the 10-year period.
3. Umbrella or Excess Liability Insurance
   Limits shall be not less than $98,000,000 per occurrence and aggregate, excess and following form to the commercial general liability policy. General aggregate limits are annually reinstated each year of construction.
4. Coverage after Completion of the Work
   Any contractor who has completed its work at the job site and whose insurance as provided by the Department's OCIP has been terminated and who returns to the job site to perform warranty work does so under its own insurance coverages and not under the insurance previously provided by the Department's OCIP.

B. Contractor Deductible Assessment

The enrolled Contractor or subcontractor primarily responsible for causing any bodily injury or property damage liability loss shall be responsible for payment of a deductible assessment. The assessment will equal the deductible under the Contractor's or subcontractor's regular (non-OCIP) commercial general liability policy up to a maximum assessment of $25,000. The minimum assessment shall be the actual loss or $5,000 whichever is less. The assessment shall be applied to each "occurrence" as that term is defined in the general liability insurance policy.

If the loss exceeds $5,000 and information necessary to determine contractor's deductible as stated on contractor's insurance policy is not available to the OCIP administrator, the OCIP administrator will charge the contractor the actual loss up to a $25,000 maximum per occurrence until receipt of documentation from the contractor's policy evidencing the contractor's actual deductible. If the loss is less than $5,000, the OCIP administrator will charge the actual loss.

The deductible assessment does not apply to workers' compensation claims for a contractor's own employee.

C. Contractor-Furnished Insurance

For any work under this contract and until completion and final acceptance of the work, the Contractor shall furnish certificates of insurance to the Department, for itself and subcontractors of all tiers, evidencing that coverages as described in the following subsections are in force on a primary basis for losses not covered under the OCIP insurance policies (i.e., "off-site losses" or losses involving excluded contractors):

1. Required Contractor-Furnished Insurance Policies
   For excluded contractors insurance shall apply to all losses. For eligible, enrolled contractors, the contractor-furnished insurance shall apply as follows:

   a. Automobile liability insurance applies on-site and off-site.
   b. Workers' compensation and employer's liability insurance applies off-site.
   c. Commercial general liability insurance applies as respects any operations that are performed at any location other than the Project Site location defined within the OCIP Commercial General Liability policy or losses that are excluded under the OCIP.
   d. Umbrella or excess liability applies as respects the above underlying commercial general liability policy.
   e. Professional liability insurance, if applicable, applies on-site and off-site.
   f. Tools and equipment floater insurance applies on-site and off-site.
   g. Protection and Indemnity (P&I) Insurance and Hull Coverage applies on-site and off-site.

   The contractor-furnished insurance shall provide that there will be no cancellations, lapse, or reduction of coverage without 30 days' prior written notice to the Department, except for 10 days' prior written notice to the Department for non-payment of premium. Certificates of contractor-furnished insurance shall set forth deductible amounts or self-insured retentions applicable to each policy.
2. Required Contractor-Furnished Insurance Limits
   The certificates of contractor-furnished insurance shall evidence minimum coverage as follows:

   a. Automobile liability insurance, including owned, non-owned and hired autos with limits no less than $1,000,000 combined single limit per accident.
   b. Workers' Compensation (Statutory) and Employer's Liability Insurance:

      $1,000,000 for bodily injury for each accident;
      $1,000,000 policy limit for bodily injury by disease;
      $1,000,000 for each employee for bodily injury by disease.

   c. Commercial General Liability Insurance with coverage at least as broad as Insurance Services Office form CG 00 01 with limits no less than:

      $1,000,000 per occurrence
      $2,000,000 products and completed operations aggregate
      $2,000,000 general aggregate

      The State, including its officers, directors, agents, and employees and the East Bay Municipal Utility District, it's officers, directors, agents and employees shall be named as additional insureds with respect to liability arising out of or connected with work performed by or on behalf of the Contractor or subcontractors of all tiers on a separately attached endorsement to the certificate of insurance.

   d. $2,000,000 Umbrella or excess liability insurance containing a clause stating that it takes effect (drops down) in the event the primary limits are impaired or exhausted. Coverage shall apply and follow form over primary coverages shown above. Limits shall apply per any one occurrence and general aggregate annually; and annual aggregate products and completed operations. Coverages and terms shall include: excess of general liability, excess of employer's liability; excess of products-completed operations, and excess of commercial automobile liability.

No umbrella or excess liability insurance is required of an eligible and enrolled subcontractor who performs less than $100,000 of the contracted work.

These minimum requirements do not limit in any way the Contractor's or subcontractor's obligation under any indemnification agreement. The Contractor agrees that it is the intent of the parties to this contract that all available limits of contractor insurance shall apply to any loss off site or otherwise not covered by the OCIP and that these minimum requirements do not in any way limit the coverage of umbrella or excess policies for any loss to which such insurance would otherwise apply, including coverage for additional insureds.

e. Professional liability insurance. If the Contractor's work requires design or design-assist services, the Contractor shall obtain and maintain, or require its subcontractors responsible for performing such design or design-assist services to obtain and maintain, at all times during the term of this contract, professional liability (errors and omissions) insurance for all professional services provided. This professional liability insurance shall include full prior acts coverage sufficient to cover the services under this contract, the limits of which shall be not less than $1,000,000 per claim written on a claims-made basis. Professional liability insurance shall be maintained during the term of the contract and for so long as the insurance is reasonably available as specified, for a period of no less than 5 years after completion of the services.

f. Contractor tools and equipment insurance. The Contractor shall be responsible for any insurance it may deem necessary for protection against loss of owned, rented, or borrowed capital equipment and tools, including any tools owned by mechanics, and any tools, equipment, scaffolding, staging, trailers, cranes, towers, and forms owned, rented, or borrowed by the Contractor or its subcontractors. The Department will have no liability with respect to such equipment and tools. The Contractor hereby waives any rights of recovery against Department for damage to or loss of such equipment or tools. Failure of the Contractor to secure such insurance or to maintain adequate levels of coverage does not obligate the Department or its agents and employees for any losses on owned, rented, or borrowed equipment. Any policies maintained by the Contractor on their owned or rented equipment and materials shall contain a provision requiring the insurance companies to waive their rights of subrogation against the Department. The Contractor shall obtain similar waivers in favor of the Department and its agents and employees from each subcontractor with whom it contracts to work on this project or any other project with the Department.

g. Protection and Indemnity (P&I) Insurance and Hull Coverage. Whatever coverage the Contractor may deem necessary for protection against maritime risks in connection with operating a vessel or barge. The Department will have no liability with respect to such maritime liability and/or damage to a vessel. Failure of the Contractor to secure such insurance or to maintain adequate levels of coverage does not obligate the Department or its agents and employees for any losses on owned, rented, leased or borrowed vessels. Any policies maintained by the Contractor on vessels shall contain a provision requiring the insurance companies to waive their rights of subrogation against the Department.

3. Maintenance of Contractor-Furnished Insurance

All required insurance shall be maintained without interruption from the date of commencement of the work until final acceptance of the work. The required contractor-furnished insurance shall be written on forms that conform to the requirements set forth in the OCIP Manual and that are otherwise acceptable to Department. The Contractor shall provide to Department within 10 days of any renewal, change or replacement of coverage, certificates of insurance and endorsements evidencing coverage required of contractor-furnished insurance.

If an eligible, enrolled Contractor or subcontractor chooses to have any of its own insurance policies include the job site during the construction period, coverage shall be excess or difference in conditions of the OCIP. The Department will not pay for this additional cost. Inclusion of the job site on such insurance policies shall not replace the OCIP coverage or otherwise affect the cost identification requirements in "Contractor Insurance Cost Deduction," of this section, "Owner Controlled Insurance Program (OCIP)."

Self-insurance programs and self-insured retentions in insurance policies must be declared and are subject to separate annual review and approval by the State. If the Contractor uses a self-insurance program or self-insured retention, then in the event of loss covered by the Contractor's insurance or not covered by the OCIP, the Contractor shall provide the State with the same protection from liability and defense of suits as would be afforded by first-dollar insurance. Execution of the contract is the Contractor's acknowledgement that the Contractor will be bound by all laws and court decisions as if the Contractor were an insurer subject to such applicable laws and court decisions.

Any type of insurance or any increase of limits of liability not described in this section, "Contractor-Furnished Insurance," that the Contractor requires for the Contractor's own protection or on account of any statute shall be the Contractor's own responsibility.

CONTRACTOR INSURANCE COST DEDUCTION

The Department will take a deduction for general liability, excess liability and workers' compensation. The deduction will be eight percent (8%) of total contract value, subject to adjustment to Contractor's actual cost of the insurance as identified by Contractor using CT OCIP Form 1, "Notice of Contract Award and Insurance Enrollment Form," a copy of which is provided in the OCIP Manual, and verified by the Department. After contract approval, the Department will immediately execute an administrative change order to establish a default OCIP deduct rate at eight percent (8%) to be applied to each Contractor progress payment. The Contractor has 30 days after contract approval to identify cost of insurance for itself and its subcontractors by filling out and submitting CT OCIP Form 1, "Notice of Contract Award and Insurance Enrollment Form," and required supporting documents (i.e. copies of the contractor's insurance policy declaration pages and premium rating pages, and any other additional documentation necessary to determine individual OCIP deduct rates) to the Department. For contractors whose costs of insurance are properly identified and verified by the Department within 30 days of contract approval, the Department will calculate the individual OCIP deduct rates for each contractor for its portion of the contracted work. For any contractor whose cost of insurance is not identified, or identified but not verifiable, after 30 days of contract approval, the Department will apply the Default OCIP deduct rate of eight percent (8%) for its portion of the contracted work. For subcontracts (except change order work) less than $100,000 in value, the Department will assign a zero percent (0%) OCIP deduct rate, thereby not taking any OCIP deduct from these subcontractors. Upon completion of reviewing and verifying cost of insurance submitted by the Contractor for itself and its subcontractors, the Department will combine contractors' individually calculated OCIP deduct rates to establish a composite OCIP deduct rate to be used for the entire duration of the contract. The Department will reduce each progress payment submitted by the Contractor by an amount equal to the composite OCIP deduct rate times the invoiced amount. The composite OCIP deduct rate will be used for all OCIP deduct calculations for the duration of the contract and not modified based upon future years' insurance rates. This composite OCIP deduct rate will also be used for audits and change order work.

A. Contractor Insurance Cost Inclusion in Bids

The Contractor's bid for the work shall include the costs of procuring and maintaining from the beginning of work through contract acceptance, as if there were no OCIP, the following insurance coverages with the limits or coverages as required by applicable laws and regulations, whichever is greater. The insurance specified by this provision shall conform to the Department's requirements and be written by companies rated A-, VII or higher by A.M. Best, Inc. and authorized to do business in the State of California. Coverage and limit requirements for purposes of calculating the insurance cost deduction are as follows:

1. Workers' compensation insurance statutory benefits and employer's liability limits of $1,000,000 for bodily injury or disease.
   Coverage shall include injury to the Contractors' employees under the U.S. Longshoremen's and Harbor Workers' Compensation Act, the Jones Act or under laws, regulations or statutes applicable to maritime employees.
2. Commercial general liability insurance with coverage no less broad than that provided by Insurance Services Office form CG 00 01 10 01 with limits of:

   For Bids/Contracts/Subcontracts less than $5,000,000:

   $1,000,000 per occurrence,
   $2,000,000 completed operations aggregate , and
   $2,000,000 general aggregate

   For Bids/Contracts/Subcontracts greater than $5,000,000:

   $2,000,000 per occurrence,
   $2,000,000 completed operations aggregate , and
   $4,000,000 general aggregate

3. Umbrella or excess liability insurance (for Contractor only) providing total limits of $25,000,000 per occurrence and aggregate. There are no excess liability insurance requirements for subcontractors.

For subcontracts (except change order work) valued less than $100,000, the Department will not take an OCIP deduct. Therefore, eligible contractors who perform less than $100,000 of the contracted work will have individual OCIP deduct rates of 0%.

B. Adjustment to Contractor Insurance Costs

If the Contractor's current insurance program does not conform to these requirements because of lower total limits or a different structure for primary insurance, the Contractor may use the following factors to account for the difference in cost between the Contractor's existing program and the program described above:

1. Cost to increase primary general liability limits:

   From:

   $1,000,000 per occurence
   $2,000,000 products and completed operations aggregate
   $2,000,000 general aggregate

   To:

   $2,000,000 per occurence
   $2,000,000 products and completed operations aggregate
   $4,000,000 general aggregate

   Add eighteen percent (18%) of the cost of primary general liability premium attributable to this project

2. Cost for $25,000,000 umbrella or excess liability coverage:

   Add forty percent (40%) of the cost of primary general liability premium attributable to this project including any adjustment required by the calculation in the above substection "Cost to increase primary general liability limits."

As an alternative to using the factors specified in the above subsections " Cost to increase primary general liability limits," and "Cost for $25,000,000 umbrella or excess liability coverage," the Contractor may obtain actual quotations from its insurers or insurance brokers for coverage as described applicable only to this project. However the Contractor shall not be required to purchase such coverage and shall not, in any case, charge the Department for such coverage.

C. Contractor Insurance Cost Deduction Identification Rules

The Contractor and subcontractors of all tiers shall use the following rules to identify all costs for insurance as described in this section:

1. Premium credits granted by the contractor's insurer in consideration of ~~the use of~~ the contractor's deductible or self-insured retention must be identified but will not be allowed as an offset to the amount to be deducted, except for the credits based on the contractor's general liability deductible assessment as described in section "Contractor Deductible Assessment." In the alternative, the Contractor may submit an insurer-provided or actuarially developed estimate of losses ("loss pick").
2. Composite rates must show rating sheets.
3. Corporate allocations must include the insurance company's actual calculation of premium. Contractor must provide additional documentation for any such credits claimed.
4. Upon request, Contractor shall provide a copy of the most recently issued WCIRB or NCCI worksheet showing payroll and losses for the Experience Modification rating period.
5. Any rate credits, other than credits for deductibles or self-retention or self-insured plans, or surcharges shown on the declaration or rating sheets, will be used to verify the Contractor's actual cost and determine the OCIP deduct rates. The OCIP Administrator will include such information in verifying the individual OCIP deduct rates for Contractors and subcontractors of all tiers

By completing and submitting CT OCIP Form 1, "Notice of Contract Award and Insurance Enrollment Form," including supporting documents (i.e. copies of the contractor's insurance policy declaration pages and premium rating pages, and any other additional documentation necessary to determine individual OCIP deduct rates) to the Department, the Contractor and subcontractors of all tiers certify that all costs for insurance as described in this section have been correctly identified.

The Contractor shall ensure subcontractors of all tiers comply with the requirement in "Contractor Insurance Cost Deduction Identification Rules," of this section, "Owner Controlled Insurance Program (OCIP)." All information furnished during this process will be considered confidential.

D. Required Record keeping for Cost Identification

In addition to the provisions of Section 7.1.01A (3), "Payroll Records," of the Standard Specifications, the Contractor shall:

1. Keep and maintain, and cause its subcontractors to keep and maintain, for insurance purposes, accurate and properly classified records of payroll and other data necessary for the proper computation of workers' compensation premiums with respect to the insurance provided by the Department. The Contractor's and its subcontractors' records shall be maintained to show separately by employee and class of work, or comparable information acceptable to the Department, all necessary pertinent payroll data excluding the premium portion of overtime for the purpose of developing and determining premiums and shall keep their records relating to the work performed under this contract in such a manner that the records can readily be separated from other work of the Contractor or subcontractors of all tiers.
2. Submit to the Engineer monthly records of workers' compensation payroll and other data for itself and its subcontractors to the Department by the 15th day of the subsequent month using CT OCIP Form 2, "Monthly Payroll Reporting Form." Upon completion of a subcontractor's work under this contract, the Contractor shall submit to the Department all necessary data to permit complete insurance premium determination for each of its subcontractors. Certified payroll is not an acceptable substitution. The Contractor and subcontractors of all tiers shall keep and maintain accurate records by workers' compensation classifications of their payroll for work insured by the OCIP.

AUDIT AND RECOVERY OF CONTRACTOR INSURANCE COST

The Contractor agrees that the Department, the OCIP Administrator and/or any OCIP Insurer(s) may inspect, copy and audit the Contractor's and the subcontractors' payroll records, books and records, insurance policies, insurance cost data, bid documents, estimates or any other information to confirm the accuracy of any information provided to the Department or OCIP Administrator, to verify compliance with the contract documents or to confirm that costs of general liability insurance, excess liability insurance and workers' compensation insurance are not included in any application for payment. The Contractor shall take steps to ensure that provisions granting to the Department and OCIP Administrator the rights under this Section are included in all contracts executed by subcontractors of every tier.

Upon contract acceptance, the Contractor shall submit to the Department all necessary data to permit complete insurance premium determination for itself and its subcontractors of all tiers. The Contractor and subcontractors of all tiers shall permit the Department and its representatives to examine or audit its books and records. At the end of the contract and each subcontract, and at any other time as determined by the Engineer, an audit will be performed using the reported payroll and receipts furnished during the OCIP policy term.

The Department will deduct all costs of insurance from the contract price and change orders. If the originally calculated composite OCIP deduct was lower than the audited insurance costs, the Department will issue a deductive change order to the Contractor to deduct the difference. If the originally calculated composite OCIP deduct was higher than the audited insurance cost, an additive change order will be issued to the Contractor for the excess deduction taken. Neither the Department nor the Contractor is entitled to interest under this audit recovery process.

For subcontracts (excluding change order work) valued less than $100,000, the Department does not take an OCIP deduct. Any OCIP deduct discrepancy with regard to this provision will be reconciled in this audit recovery process.

The Department has the right to issue an additional deductive change order to recover cost if it is discovered at any time that the Contractor has included charges for insurance already paid under OCIP in any quotations or billings submitted to the Department.

OCCUPATIONAL SAFETY AND HEALTH EVALUATION

Pursuant to Government Code Section 4420, prospective bidders shall submit CT OCIP Form 4, "Occupational Safety and Health Evaluation," to provide the Department with the following information:

1. Serious and willful violation of Part 1 (commencing with Section 6300) of Division 5 of the Labor Code by the Contractor during the past 5-year period.
2. The Contractor's workers' compensation experience modification factor.
3. The Contractor's injury prevention program instituted pursuant to Section 3201.5 or 6401.7 of the Labor Code.

The Contractor shall submit their current Experience Modification as calculated by the California Workers Compensation Insurance Rating Bureau (WCIRB) or the National Council on Compensation Insurance (NCCI), whichever is applicable for the contracted work. A contractor who is self-insured shall submit its Certificate of Consent to Self-Insure in place of its Experience Modification. A newly joint venture shall submit their current Experience Modification for each and every partner.

CT OCIP Form 4, "Occupational Safety and Health Evaluation," is included in the "Proposal and Contract" and must be submitted by the bidder with its proposal. A bidder's failure to provide CT OCIP Form 4 in its sealed bid may cause its bid to be non-responsive.

CONTRACTOR RESPONSIBILTIES

The Contractor shall be responsible for and require its subcontractors of all tiers to be responsible for:

1. Compliance with all rules and regulations of the California Workers Compensation Rating Bureau.
2. Compliance with applicable claims handling responsibilities and project safety administration as specified in "Claim Handling Responsibilities" and "Project Safety Administration" of this section, "Owner Controlled Insurance Program (OCIP)."
3. Provision of necessary contract, operations, and insurance information including but not limited to declarations pages, underwriting and rating information, certificates, loss histories, OSHA citations, and, if requested, complete, certified copies of insurance polices.
4. Full and unconditional and prompt cooperation with the Department and its representatives as regards the administration and operation of the OCIP.
5. Assuring that all subcontractors receive copies of the OCIP Manual, but failure of Contractor to provide an OCIP Manual to the subcontractors shall not relieve the Contractor or any subcontractor from any of the obligations contained in this agreement.
6. Assuring that the terms of this Section 5-1.40, "Owner Controlled Insurance Program," are included in all subcontracts of every tier, purchase orders, and agreements entered into for performance of any portion of the work.
7. Not violating or knowingly permit violation of any conditions of the policies of insurance provided under the OCIP.

Without limitation upon any of the Department's other rights or remedies, any failure by the Contractor or any subcontractor to comply with any provision of this section, "Owner Controlled Insurance Program," or the OCIP Manual shall be deemed a material breach of the contract, thereby entitling the Department, at its option, upon notice to the Contractor to (1) suspend performance by the Contractor, without any compensation, until there is full compliance, or (2) or terminate this contract for cause. The Contractor shall not violate or knowingly permit to be violated any conditions of the OCIP Policies or other policies of insurance required by this Section, "Owner Controlled Insurance Program (OCIP)," or by the OCIP Manual. The Contractor shall ensure that all requirements imposed by such policies, the terms of this section, "Owner Controlled Insurance Program (OCIP)," and the OCIP Manual shall likewise be imposed on, and assumed and performed by, each subcontractor of every tier.

FORM AND DOCUMENT TO BE SUBMITTED FOLLOWING CONTRACT AWARD

The Contractor shall submit the following forms as specified:

1. CT OCIP Form 1, "Notice of Contract Award and Insurance Enrollment Form." Contractor and eligible subcontractors of all tiers, before starting work, shall complete and submit CT OCIP Form 1 to the Engineer along with copies of the contractor's policy pages that display applicable rates and premium calculations for workers' compensation, general liability, and excess or umbrella liability (if applicable) insurance, and a copy of the contractor's current experience modification worksheet.

2. CT OCIP Form 2, "Monthly Payroll Reporting Form." The enrolled Contractor and subcontractors of all tiers shall complete and submit CT OCIP Form 2 to the Engineer for the prior month's work by the 15th day of the following month. This form shall be submitted monthly until CT OCIP Form 3, "Contractor's Notice of Work Termination," is submitted, even if there was no on-site work performed. CT OCIP Form 2 is in addition to any payroll records required by Section 7-1.01A(3), "Payroll Records," of the Standard Specifications.
3. CT OCIP Form 3, "Contractor's Notice of Work Termination." The Contractor and enrolled subcontractors of all tiers shall, upon completion of its work, complete and submit this form to the Engineer by the 5th work day after the last day of the month during which work was completed, including punch list items under the contract. The Contractor shall ensure subcontractors of all tiers complete this form.
4. CT OCIP Form 4, "Occupational Safety and Health Evaluation." Eligible subcontractors of all tiers, before starting work, shall complete and submit CT OCIP Form 4 to the Engineer in order to be enrolled in the OCIP.

Failure of the Contractor to submit complete OCIP documents to the Engineer will result in the assessment of a retention against the Contractor in the amount of $500 for each day any of the CT OCIP forms are not submitted within the above time frames. The Contractor will not be compensated for any delays or costs resulting from failure to comply with these requirements.

ASSIGNMENT OF RETURN PREMIUM

The Department will pay all OCIP premiums. The Department will be the sole beneficiary of any dividends or return premiums generated by the OCIP.

In consideration of the Department providing an OCIP, the Contractor and subcontractors waive any right to and shall irrevocably assign to and for the benefit of the Department, all return premiums, premium refunds, premium discounts, dividends, retentions, credits, and any other moneys due the Department in connection with the insurance that the Department will provide and shall evidence same by a formal instrument of assignment, if requested, to be promptly executed in the form prepared by the Department. The Contractor shall execute and require all tiers of enrolled subcontractors to execute a similar assignment for the benefit of the Department.

OCIP COVERAGE EXPIRATION

Except for completed operations coverage, OCIP insurance coverage for enrolled Contractor will terminate upon contract acceptance and OCIP insurance coverage for its enrolled subcontractors will terminate upon completion of work at the job site. All coverage for ongoing operations shall cease upon termination of the OCIP. Contractors and subcontractors still performing work will be notified in advance of OCIP termination and will be required to provide insurance to cover any remaining work, subject to an appropriate change order for the cost of such coverage.

NODIFICATIONS TO OCIP

The Department reserves the right to terminate or modify all or part of the Department's OCIP with 30 days prior written notice. In the event of termination or modification, the Contractor and its subcontractors of all tiers shall procure and maintain insurance required by the Department. The Department will reimburse to the Contractor the cost of insurance replacement, including associated project costs that may arise due to such insurance replacement. The form, coverage, limits, cost, and insurer rating for the replacement insurance shall be subject to Department approval.

FAILIURE TO MAINTAIN INSURANCE

In the event the Contractor or any subcontractor fails to furnish and maintain required insurance or to furnish satisfactory evidence of the required insurance, the Department may procure and maintain the coverages for the Contractor or subcontractor. The Department will furnish all necessary information to the Contractor and deduct the cost from any monies due or to become due the Contractor. Failure to provide evidence of such insurance may result in the Contractor or subcontractor being excluded from the job site until proper coverage is verified. The cost of any resulting delay will be borne by the Contractor.

NO RELEASE

The OCIP does not relieve the Contractor or its subcontractors of any tier of any responsibility or liability under this contract or any applicable law, statute, regulation or order.

The Contractor shall not be relieved from his responsibility for safety in accordance with Section 7-1.06, "Safety and Health Provisions," Section 7-1.08, "Public Convenience," and Section 7-1.09, "Public Safety," of the Standard Specifications, and in "Project Safety," of this section, "Owner Controlled Insurance Program (OCIP)".

WAIVER OF RIGHT OF RECOVERY

Contractor hereby waives all rights of recovery against the Department, Consultants, the OCIP Administrator, and any other contractor, subcontractor and consultant performing work or rendering services in connection with the project, including without limitation, the officers, directors, agents, shareholders and employees of each of them. The waivers provided for in this paragraph shall be deemed effective as to any individual or entity even if such individual or entity: (1) would otherwise have a duty of indemnification, contractual or otherwise; (2) did not pay the insurance premium directly or indirectly.

CALIM REPORTING RESPONSIBILITIES

The Contractor shall adhere to and perform all reporting requirements as set forth in the Claims Procedures part of the Department's OCIP Manual.

PROJECT SAFETY

The Contractor shall ensure that its employees and the general public will be provided a clean, safe environment free of recognized hazards during construction activities. The ultimate responsibility for providing a safe place to work rests with the Contractor. The Contractor shall develop its own written Site-Specific Safety Program (SSSP). At minimum, the SSSP shall conform to the requirements addressed in the California Code of Regulations (CCR) if applicable, and any other pertinent safety regulations. This includes, but is not limited to, all applicable Local, State, and Federally recognized Safety Standards and Codes.

Without diminishing the Contractor's responsibility for safety, the Department through its OCIP may provide technical safety services to assist the Engineer in monitoring the safety, health, and environmental performance of the Contractor and its subcontractors of all tiers. The Contractor and its subcontractors of all tiers shall be monitored for effectiveness and application of their respective safety programs at the job site.

The Contractor and its subcontractors of all tiers shall adhere to a 100% drug/alcohol free work zone. At a minimum pre-employment, probable cause, and post-accident testing is required.

DUTY OF CARE

Nothing contained in this section, "Owner Controlled Insurance Program (OCIP)," or in the OCIP manual or any insurance policy shall relieve the Contractor or any of its subcontractors of any tier of their respective obligations to exercise due care in the performance of their duties in connection with the work and to complete the work in strict compliance with the contract documents.

STATE OF CALIFORNIA - DEPARTMENT OF TRANSPORTATION

CONTRACT CHANGE ORDER MEMORANDUM

DATE: 9/15/2008 Page 1 of 1

TO: AMER BATA / BEN GHAFGHAZI	FILE: E.A. 04 - 0120L4
FROM: BEN GHAFGHAZI	CO-RTE-PM ALA-80-1.6/2.7
	FED. NO. NO FED AID
CCO#: 6 SUPPLEMENT#: 2 Category Code: AXZZ	CONTINGENCY BALANCE (incl. this change) $13,476,520.20
COST: $0.00 INCREASE ☐ DECREASE ☐	HEADQUARTERS APPROVAL REQUIRED? ☑ YES ☐ NO
SUPPLEMENTAL FUNDS PROVIDED: $0.00	IS THIS REQUEST IN ACCORDANCE WITH ENVIRONMENTAL DOCUMENTS? ☑ YES ☐ NO
CCO DESCRIPTION: Revise OCIP Deduction from4% to 1.3%.	**PROJECT DESCRIPTION:** Construct bridge, roadway, building and electrical system.

Original Contract Time:	Time Adj. This Change:	Previously Approved CCO Time Adjustments:	Percentage Time Adjusted: (including this change)	Total # of Unreconciled Deferred Time CCO(s): (including this change)
810 Day(s)	0 Day(s)	0 Day(s)	0 %	6

THIS CHANGE ORDER PROVIDES FOR:

Revising OCIP deduct rates to 1.3% based on contractor provided insurance information in accordance with Section 5-1.40, "Owner Controlled Insurance Program (OCIP)," Subsection, "Contractor Insurance Cost Deduction," of the Special Provisions.

This change is necessary to revise the previously estimated deduct rate to reflect the actual composite deduct rate. This rate has been calculated based on the actual cost of insurance of the prime contactor and subcontractors as provided on OCIP forms per pages 3 of 26 through 26 of 26 of this CCO and summarized on page 2 of 26 of this CCO. These costs have been verified by Caltrans' Office of Risk Management.

This change order supercedes change orders #6 and #6 Supplement 1, which established rates of 8% and 4% respectively.

This CCO was discussed and concurred with Kha T. Hoang, Office of Risk Management, Mike Forner, Principal Construction Engineer, Patrick Treacy, Headquarters Construction, and Ken Terpstra, Project Manager. Design and Maintenance concurrence are not necessary since this CCO is for administration purposes only. An Issue and Approve was received from Ken Darby on September 18, 2008.

No adjustment of contract time is warranted since this change does not affect the controlling operation.

CONCURRED BY:			
Construction Engineer:	Ben Ghafghazi	Date	9/19/08
Bridge Engineer:		Date	
Project Engineer:	Ken Terprstra	Date	9/17/08
Project Manager:		Date	
FHWA Rep.:		Date	
Environmental:		Date	
Other (specify):	Kha T. Hoang, Ofc. of Risk Manag	Date	9/15/08
Other (specify):	Patrick Treacy, HQ Const. Coord.	Date	9/17/08
District Prior Approval By:		Date	
HQ (Issue Approve) By:	Ken Darby	Date	9/18/08
Resident Engineer's Signature:		Date	9/19/08

ESTIMATE OF COST

	THIS REQUEST	TOTAL TO DATE
ITEMS	$0.00	$0.00
FORCE ACCOUNT	$0.00	$0.00
AGREED PRICE	$0.00	$0.00
ADJUSTMENT	$0.00	$0.00
TOTAL	$0.00	$0.00

FEDERAL PARTICIPATION

☐ PARTICIPATING ☐ PARTICIPATING IN PART ☑ NONE
☐ NON-PARTICIPATING (MAINTENANCE) ☐ NON-PARTICIPATING

FEDERAL SEGREGATION (if more than one Funding Source or P.I.P. type)
☑ CCO FUNDED PER CONTRACT ☐ CCO FUNDED AS FOLLOWS

FEDERAL FUNDING SOURCE	PERCENT

ADA Notice: For individuals with sensory disabilities, this document is available in alternate formats. For information call: (916) 654-6410 or TDD (916) 654-3880 or write Records and Forms Management, 1120 N Street, MS-89, Sacramento, CA 95814.

STATE OF CALIFORNIA - DEPARTMENT OF TRANSPORTATION

CONTRACT CHANGE ORDER

Change Requested by: Engineer

CCO 7	Suppl. No. 0	Contract No. 04 - 0120L4	Road ALA-80-1.6/2.7	FED. AID LOC.: NO FED AID

To: **M C M CONSTRUCTION INC**

You are directed to make the following changes from the plans and specifications or do the following described work not included in the plans and specifications for this contract. ***NOTE: This change order is not effective until approved by the Engineer.***

Description of work to be done, estimate of quantities and prices to be paid. (Segregate between additional work at contract price, agreed price and force account.) Unless otherwise stated, rates for rental of equipment cover only such time as equipment is actually used and no allowance will be made for idle time. This last percentage shown is the net accumulated increase or decrease from the original quantity in the Engineer's Estimate.

Extra Work at Force Account:

In accordance with Section 5-1.11, "Partnering," of the Special Provisions, reimburse the Contractor for a one-day "Training in Partnering Concepts" session and for the State's share of expenses for the initial "Partnering Workshop" and any follow up workshops.

Costs for the initial "Training in Partnering Concepts" session shall be borne entirely by the State. Costs for a "Partnering Workshop" and follow up workshops shall be borne equally by the Contractor and the State.

Costs shall be determined in accordance Section 9-1.03B, "Work Performed by Special Forces or Other Special Services, of the Standard Specifications, except that no mark up will be added.

Estimated cost of Extra Work at Force Account $40,000.00

Estimated Cost: Increase ☑ **Decrease** ☐ **$40,000.00**

By reason of this order the time of completion will be adjusted as follows: 0 days

Submitted by

Signature	Resident Engineer BEN GHAFGHAZI	Date 9/17/07

Approval Recommended by

Signature	Construction Engineer Ben Ghafghazi	Date 9/17/07

Engineer Approval by

Signature	Construction ~~Engineer~~ Manager ~~Ben Ghafghazi~~ Amer Bata	Date 9/21/07

We the undersigned contractor, have given careful consideration to the change proposed and agree, if this proposal is approved, that we will provide all equipment, furnish the materials, except as may otherwise be noted above, and perform all services necessary for the work above specified, and will accept as full payment therefor the prices shown above.

NOTE: If you, the contractor, do not sign acceptance of this order, your attention is directed to the requirements of the specifications as to proceeding with the ordered work and filing a written protest within the time therein specified.

Contractor Acceptance by

Signature	(Print name and title) EDMUNDO A. PUCHI, TREASURER	Date 9/19/07

STATE OF CALIFORNIA - DEPARTMENT OF TRANSPORTATION

CONTRACT CHANGE ORDER MEMORANDUM

TO: AMER BATA / BEN GHAFGHAZI	FILE: **E.A.** 04 - 0120L4
FROM: BEN GHAFGHAZI	**CO-RTE-PM** ALA-80-1.6/2.7
	FED. NO. NO FED AID
CCO#: **7** SUPPLEMENT#: **0** Category Code: **AUZZ**	CONTINGENCY BALANCE (incl. this change) **$18,351,741.54**
COST: **$40,000.00** INCREASE ☑ DECREASE ☐	HEADQUARTERS APPROVAL REQUIRED? ☐ YES ☑ NO
SUPPLEMENTAL FUNDS PROVIDED: **$40,000.00**	IS THIS REQUEST IN ACCORDANCE WITH ENVIRONMENTAL DOCUMENTS? ☑ YES ☐ NO
CCO DESCRIPTION: Partnering	**PROJECT DESCRIPTION:** Construct bridge, roadway, building and electrical system.

Original Contract Time:	Time Adj. This Change:	Previously Approved CCO Time Adjustments:	Percentage Time Adjusted: (including this change)	Total # of Unreconciled Deferred Time CCO(s): (including this change)
650 Day(s)	**0** Day(s)	**0** Day(s)	**0** %	**0**

THIS CHANGE ORDER PROVIDES FOR:

Reimbursing the Contractor for a one day "Training in Partnering Concepts," session and for the State's share of expenses for the initial "Partnering Workshop," and additional progress workshops throughout the life of the contract in accordance with Section 5-1.11, "Partnering," of the Special Provisions.

Costs for the initial "Training in Partnering Concepts," shall be borne entirely by the State. Costs for a "Partnering Workshop," if requested by the Contractor, shall be borne equally by the Contractor and the State. Payment shall be in accordance Section 9-1.03B, "Work Performed by Special Forces or Other Special Services," of the Standard Specifications, except that no mark up will be added.

This work will be paid as Extra Work at Force Account at an estimated cost of $40,000.00, which will be financed from the supplemental funds of $100,000 provided for this contract.

No adjustment of contract time is warranted by this change.

Design and Maintenance concurrence is not required as this work is anticipated by the contract documents.

The Resident Engineer recommends this change order be approved.

CONCURRED BY:

Construction Engineer:	Ben Ghafghazi	Date 9/12/07
Bridge Engineer:		Date
Project Engineer:		Date
Project Manager:		Date
FHWA Rep.:		Date
Environmental:		Date
Other (specify):		Date
Other (specify):		Date
District Prior Approval By:		Date
HQ (Issue _Approve) By:		Date
Resident Engineer's Signature:		Date 9/12/07

ESTIMATE OF COST

	THIS REQUEST	TOTAL TO DATE
ITEMS	$0.00	$0.00
FORCE ACCOUNT	$40,000.00	$40,000.00
AGREED PRICE	$0.00	$0.00
ADJUSTMENT	$0.00	$0.00
TOTAL	$40,000.00	$40,000.00

FEDERAL PARTICIPATION

☐ PARTICIPATING ☐ PARTICIPATING IN PART ☐ NONE
☐ NON-PARTICIPATING (MAINTENANCE) ☐ NON-PARTICIPATING

FEDERAL SEGREGATION (if more than one Funding Source or P.I.P. type)
☐ CCO FUNDED PER CONTRACT ☐ CCO FUNDED AS FOLLOWS

FEDERAL FUNDING SOURCE	PERCENT

STATE OF CALIFORNIA - DEPARTMENT OF TRANSPORTATION

CONTRACT CHANGE ORDER

Change Requested by: Engineer

CCO 8	Suppl. No. 0	Contract No. 04 - 0120L4	Road ALA-80-1.6/2.7	FED. AID LOC.: NO FED AID

To: **M C M CONSTRUCTION INC**

You are directed to make the following changes from the plans and specifications or do the following described work not included in the plans and specifications for this contract. ***NOTE: This change order is not effective until approved by the Engineer.***

Description of work to be done, estimate of quantities and prices to be paid. (Segregate between additional work at contract price, agreed price and force account.) Unless otherwise stated, rates for rental of equipment cover only such time as equipment is actually used and no allowance will be made for idle time. This last percentage shown is the net accumulated increase or decrease from the original quantity in the Engineer's Estimate.

Extra Work at Force Account:

Establish a Dispute Review Board (DRB) for this contract as provided in Section 5-1.12, "Dispute Review Board," of the Special Provisions.

The DRB agreement and certifications of the Contractor, State and DRB members shall be executed by the parties and made a part of this contract upon full execution.

The cost of this work shall be borne equally by the contractor and the State, as provided in the above agreement. No markups or surcharges will be allowed in payment of the State's share of the cost of the work provided herein.

Estimated cost of Extra Work at Force Account $30,000.00

Estimated Cost: **Increase** ☑ **Decrease** ☐ **$30,000.00**

By reason of this order the time of completion will be adjusted as follows: 0 days

Submitted by

Signature	Resident Engineer BEN GHAFGHAZI	Date 9/12/07

Approval Recommended by

Signature	Construction Engineer Ben Ghafghazi	Date 9/12/07

Engineer Approval by

Signature	Construction ~~Engineer~~ Manager ~~Ben Ghafghazi~~ Amer Bata	Date 9/21/07

We the undersigned contractor, have given careful consideration to the change proposed and agree, if this proposal is approved, that we will provide all equipment, furnish the materials, except as may otherwise be noted above, and perform all services necessary for the work above specified, and will accept as full payment therefor the prices shown above.

NOTE: If you, the contractor, do not sign acceptance of this order, your attention is directed to the requirements of the specifications as to proceeding with the ordered work and filing a written protest within the time therein specified.

Contractor Acceptance by

Signature	(Print name and title) EDMUNDO A. PUCHI, TREASURER	Date 9/19/07

STATE OF CALIFORNIA - DEPARTMENT OF TRANSPORTATION

CONTRACT CHANGE ORDER MEMORANDUM

TO: AMER BATA / BEN GHAFGHAZI	FILE: **E.A.** 04 - 0120L4
FROM: BEN GHAFGHAZI	**CO-RTE-PM** ALA-80-1.6/2.7
	FED. NO. NO FED AID
CCO#: **8** SUPPLEMENT#: **0** Category Code: **ARZZ**	CONTINGENCY BALANCE (incl. this change) **$18,351,741.54**
COST: **$30,000.00** INCREASE ☑ DECREASE ☐	HEADQUARTERS APPROVAL REQUIRED? ☐ YES ☑ NO
SUPPLEMENTAL FUNDS PROVIDED: **$30,000.00**	IS THIS REQUEST IN ACCORDANCE WITH ENVIRONMENTAL DOCUMENTS? ☑ YES ☐ NO
CCO DESCRIPTION: Dispute Review Board	**PROJECT DESCRIPTION:** Construct bridge, roadway, building and electrical system.

Original Contract Time:	Time Adj. This Change:	Previously Approved CCO Time Adjustments:	Percentage Time Adjusted: (including this change)	Total # of Unreconciled Deferred Time CCO(s): (including this change)
650 Day(s)	**0** Day(s)	**0** Day(s)	**0** %	**0**

THIS CHANGE ORDER PROVIDES FOR:

Establishing a Disputes Review Board (DRB) in accordance with the terms specified in the DRB specifications, guidelines, Agreement and Certifications specified in Section 5.1.12, "Dispute Review Board," of the Special Provisions and made a part of this change. The purpose of the Board is to assist in the resolution of disputes and potential claims arising from the contract work.

The cost of providing a DRB for this contract shall be borne equally by the Contractor and the State. For the purposes of enabling partial payment to the Contractor on a monthly basis, the method of payment shall be Extra Work at Force Account The estimated cost of $30,000.00 and will be financed form $30,000.00 in supplemental funds provided for this contract. Payments shall be made on a lump sum basis from invoices submitted by the Board, not more often than once a month. Markups will not be allowed in the payment of the State's share of the invoiced costs.

No adjustment of contract time is warranted by this change.

Design and Maintenance concurrence is not required as this work is anticipated by the contract documents.

CONCURRED BY:

Construction Engineer:	Ben Ghafghazi	Date 9/12/07
Bridge Engineer:		Date
Project Engineer:		Date
Project Manager:		Date
FHWA Rep.:		Date
Environmental:		Date
Other (specify):		Date
Other (specify):		Date
District Prior Approval By:		Date
HQ (Issue Approve) By:		Date
Resident Engineer's Signature:		Date 9/12/07

ESTIMATE OF COST

	THIS REQUEST	TOTAL TO DATE
ITEMS	$0.00	$0.00
FORCE ACCOUNT	$30,000.00	$30,000.00
AGREED PRICE	$0.00	$0.00
ADJUSTMENT	$0.00	$0.00
TOTAL	$30,000.00	$30,000.00

FEDERAL PARTICIPATION

☐ PARTICIPATING ☐ PARTICIPATING IN PART ☑ NONE
☐ NON-PARTICIPATING (MAINTENANCE) ☐ NON-PARTICIPATING

FEDERAL SEGREGATION (if more than one Funding Source or P.I.P. type)
☑ CCO FUNDED PER CONTRACT ☐ CCO FUNDED AS FOLLOWS

FEDERAL FUNDING SOURCE	PERCENT

CONTRACT CHANGE ORDER

Change Requested by: Engineer

CCO 9	Suppl. No. 0	Contract No. 04 - 0120L4	Road ALA-80-1.6/2.7	FED. AID LOC.: NO FED AID

M C M CONSTRUCTION INC

You are directed to make the following changes from the plans and specifications or do the following described work not included in the plans and specifications for this contract. ***NOTE: This change order is not effective until approved by the Engineer.***

Description of work to be done, estimate of quantities and prices to be paid. (Segregate between additional work at contract price, agreed price and force account.) Unless otherwise stated, rates for rental of equipment cover only such time as equipment is actually used and no allowance will be made for idle time. This last percentage shown is the net accumulated increase or decrease from the original quantity in the Engineer's Estimate.

Eliminate seismic joints at Hinge EW, Hinge EE, Hinge FW, and Abutment E23L.

Estimate of Decrease in Contract Item at Contract Price:

Item No. 122: SEISMIC JOINT (HINGE EW)
-1 LS (-100.00%) $150,000.00 /LS = -$150,000.00 (-100.00%)

Item No. 123: SEISMIC JOINT (HINGE EE)
-1 LS (-100.00%) $150,000.00 /LS = -$150,000.00 (-100.00%)

Item No. 124: SEISMIC JOINT (HINGE FW)
-1 LS (-100.00%) $150,000.00 /LS = -$150,000.00 (-100.00%)

Item No. 125: SEISMIC JOINT (ABUTMENT E23L)
-1 LS (-100.00%) $120,000.00 /LS = -$120,000.00 (-100.00%)

Total cost for Decrease in Contract Item.....($570,000.00)

In accordance with Section 4-1.03B(3), "Eliminated Items," of the Standard Specifications, the adjustment due to the elimination of Items #122, Seismic Joint (HINGE EW); #123, Seismic Joint (HINGE EE); #124, Seismic Joint (HINGE FW); and #125, Seismic Joint (ABUTMENT E23L), is zero.

Revise reinforcing to accommodate future seismic joints per sheets 2 of 13 through 13 of 13 of this CCO. These sheets shall replace contract Structure plan sheets 209, 232, 236, 237, 248, 252, 253, 262, 263, 274, and 298 of 643.

Delete contract Structure plan sheets 275 through 290 of 643.

Delete Section 10-1.57, "Seismic Joint," of the Special Provisions.

There shall be no additional cost as a result of these changes.

Estimated Cost: Increase ☐ **Decrease** ☑ **($570,000.00)**

By reason of this order the time of completion will be adjusted as follows: 0 days

Submitted by

Signature	~~Resident~~ Engineer BEN GHAFGHAZI	Date 8/1/08

Approval Recommended by

Signature	Construction Manager Amer Bata	Date 8/1/08

Engineer Approval by

Signature	Construction Manager Amer Bata	Date 8/20/08

We the undersigned contractor, have given careful consideration to the change proposed and agree, if this proposal is approved, that we will provide all equipment, furnish the materials, except as may otherwise be noted above, and perform all services necessary for the work above specified, and will accept as full payment therefor the prices shown above.

NOTE: If you, the contractor, do not sign acceptance of this order, your attention is directed to the requirements of the specifications as to proceeding with the ordered work and filing a written protest within the time therein specified.

Contractor Acceptance by

Signature	(Print name and title) H.D. McGOVERN, G.M.	Date 8/18/08

DIST	COUNTY	ROUTE	KILOMETER POST TOTAL PROJECT	SHEET NO.	TOTAL SHEETS
04	Ala	80	1.6/2.7	209R1	643

Caltrans Metric

Adam Wang
REGISTERED ENGINEER - CIVIL
1-29-07
PLANS APPROVAL DATE

REGISTERED PROFESSIONAL ENGINEER ADAM TM WANG No. 40402 Exp. 3-31-2009 CIVIL STATE OF CALIFORNIA

The State of California or its officers or agents shall not be responsible for the accuracy or completeness of electronic copies of this plan sheet.

T.Y. LIN / MOFFATT & NICHOL
TWO HARRISON STREET, SUITE 500
SAN FRANCISCO, CA 94105

W. KOO & ASSOCIATES, INC
625 THE CITY DRIVE SOUTH, SUITE 200
ORANGE, CA 92868

To get to the Caltrans web site, go to: http://www.dot.ca.gov

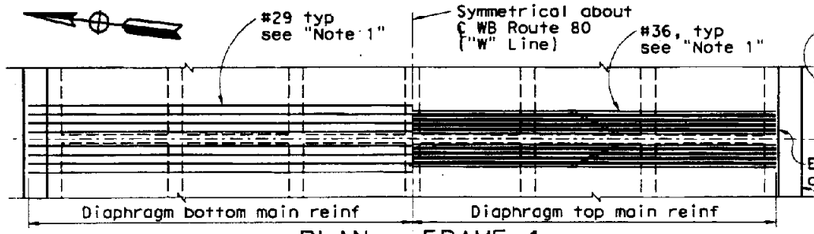

PLAN - FRAME 1
NO SCALE

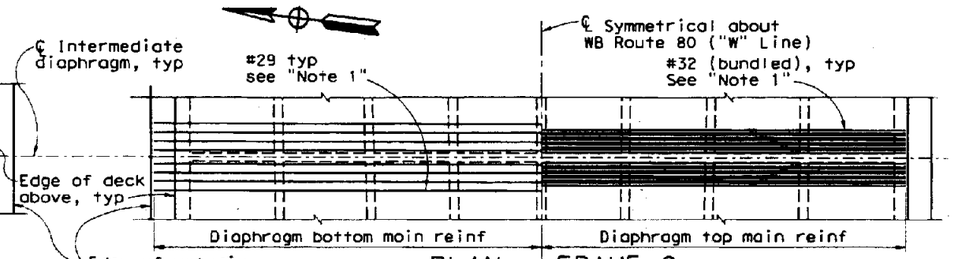

PLAN - FRAME 2
NO SCALE

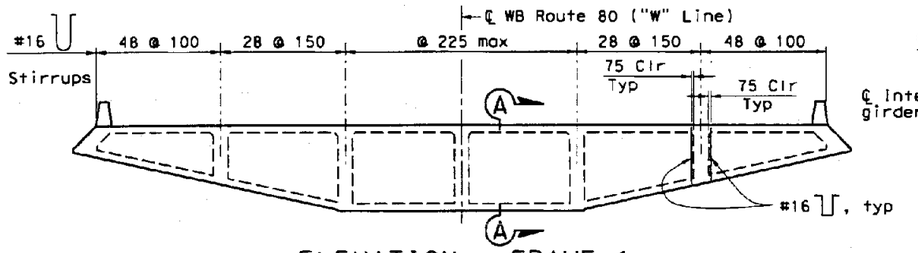

ELEVATION - FRAME 1
NO SCALE

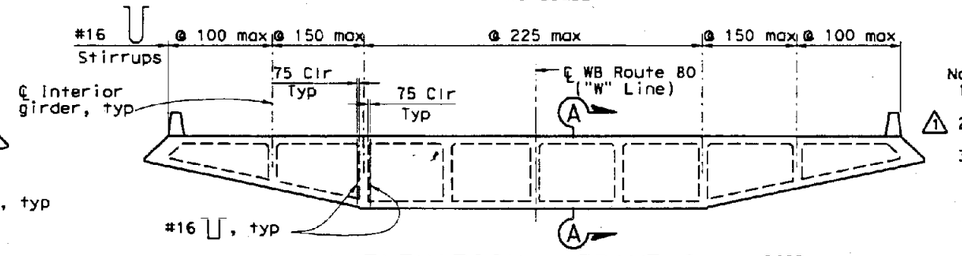

ELEVATION - FRAME 2
NO SCALE

Notes:
1. No lap splices allowed in main diaphragm reinforcement.
2. For "a" dimensions and blockout details, See "Deck Joint Details" sheet.
3. For anchor bolts at deck joint blockouts, See "Seismic Joint" sheets.

LEGEND
~~@~~ indicates bundled reinf
✳ @ 150 @ all Boys except @ 100 @ 1st interior Boys

MARK	DATE	DESCRIPTIONS	BY	CH'D	CCO#
1	3/17/08	JOINT IMPROVEMENT, ADD ANCHOR RODS & DELETE JT REINF	AW	VT	

REVISIONS

CONTRACT CHANGE ORDER NO. 9
SHEET 2 OF 13
04-0120L4
7/31/08

REGISTERED PROFESSIONAL ENGINEER VINH DIEU TRINH No. 50685 Exp. 9-30-2009 CIVIL STATE OF CALIFORNIA

STAMP IS VALID FOR REVISION 1 ONLY

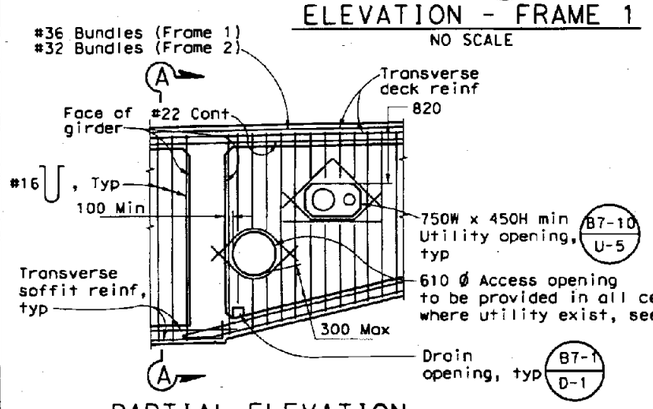

PARTIAL ELEVATION

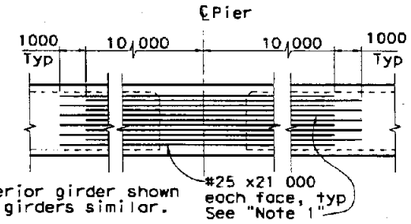

Note:
Pier E17L interior girder shown other Piers & girders similar.

GIRDER STEM REINFORCEMENT
PIERS E17L THRU E22L
No Scale

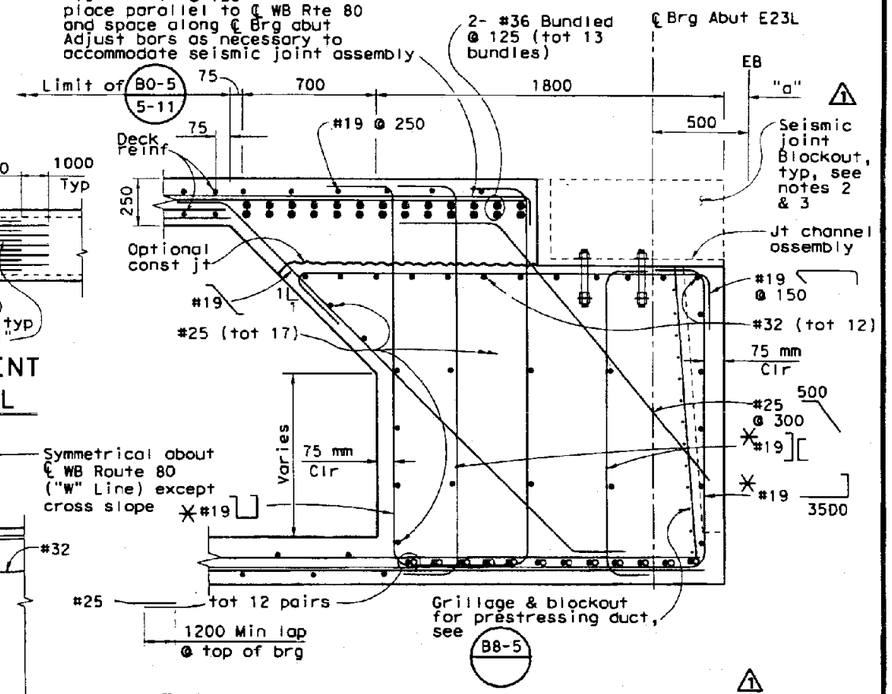

END DIAPHRAGM DETAILS - ABUT E23L
1:15

Note: For "a" & Blockout dimensions, see "Deck Joint Details" sheets.

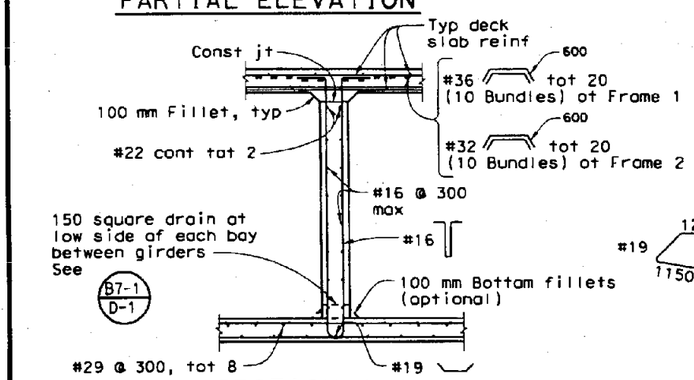

SECTION A-A

INTERMEDIATE DIAPHRAGM DETAILS
NO SCALE

Note:
For locations of intermediate diaphragm, see "WB Girder Layout No. 1 thru 4" sheets.

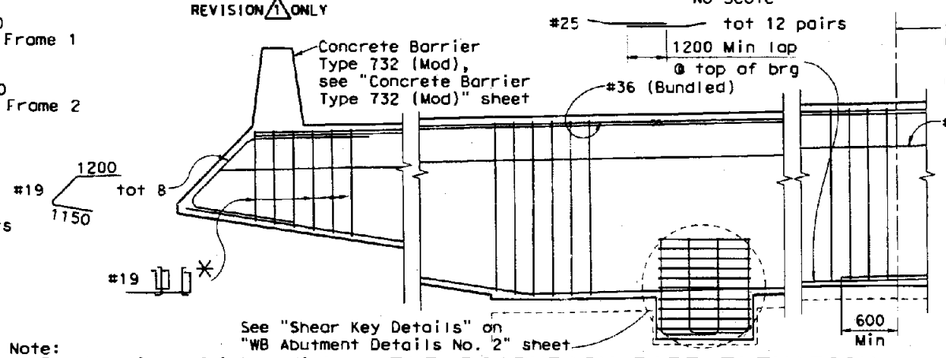

END DIAPHRAGM PART ELEVATION
No Scale

ALL DIMENSIONS ARE IN MILLIMETERS UNLESS OTHERWISE SHOWN

SAN FRANCISCO OAKLAND BAY BRIDGE
EAST SPAN SEISMIC SAFETY PROJECT

OAKLAND APPROACH STRUCTURES-PHASE 1

WESTBOUND GIRDER DETAILS

DESIGN OVERSIGHT: SAM AKKAD, FRANCISCO CAMPIO, BERNARD CHAN, HASAN EL-NATUR
SIGN OFF DATE

	BY	CHECKED
DESIGN	K. Russell	A. Moubayed
DETAILS	G. Buelow	A. Moubayed
QUANTITIES	O. Joradat	H. Haroun

PREPARED FOR THE STATE OF CALIFORNIA DEPARTMENT OF TRANSPORTATION

Adam Wang
PROJECT ENGINEER

BRIDGE NO. 34-0006L/R
KILOMETER POST 1.6

CU 04
EA 0120L1

DISREGARD PRINTS BEARING EARLIER REVISION DATES

REVISION DATES (PRELIMINARY STAGE ONLY): 10/27/04 2/28/05 5/24/05 11/14/05 1/13/06 4/13/06 7/13/06 11/13/06 10/26/07 3/11/08

SHEET 96 OF 224

Rev. Date: 5-18-98

ORIGINAL SCALE IN MILLIMETERS FOR REDUCED PLANS 0 10 20 30 40 50 60 70 80 90 100

FILENAME => $FILE$ DATE PLOTTED => $DATE$ TIME PLOTTED => $TIME$

USERNAME => $USER

DIST	COUNTY	ROUTE	KILOMETER POST TOTAL PROJECT	SHEET NO.	TOTAL SHEETS
04	Ala	80	1.6/2.7	232R1	643

REGISTERED ENGINEER - CIVIL
1-29-07
PLANS APPROVAL DATE

The State of California or its officers or agents shall not be responsible for the accuracy or completeness of electronic copies of this plan sheet.

T.Y. LIN / MOFFATT & NICHOL
TWO HARRISON STREET, SUITE 500
SAN FRANCISCO, CA 94105

W. KOO & ASSOCIATES, INC
625 THE CITY DRIVE SOUTH, SUITE 200
ORANGE, CA 92868

Notes:

1. For additional reinforcement, see "Westbound Hinge EW Details No.12" sheet.
2. Adjust reinforcement to clear prestressing tendons.
3. For Section b-b, Section c-c and Section e-e, see "Westbound Hinge EW Details No.16" sheet.
4. For "Section d-d", see "Westbound Hinge EW Details No.15" sheet.
5. Epoxy coat reinforcement for Diaphragm C shown on this sheet.
6. Adjust headed reinforcement to clear prestressing bars.
7. Longitudinal girder P/S duct shown for 4 ducts @ interior girders. P/S ducts & reinf for other layout are similar except where there are no ducts interference, diaphragm reinf should be made continuously.
8. Other reinf are not shown for clarity.
9. Electrical conduits shown for reference only. For actual locations & No. of conduits, see "Electrical Plans".
10. 81 mm clr shall be maintained for longitudinal reinf top layer of deck rebar and headed bars after deck ground off for seismic jt. Bend longitudinal reinf as required. △1
11. See Note 10 on "Westbound Hinge FW Details No. 2" sheet.

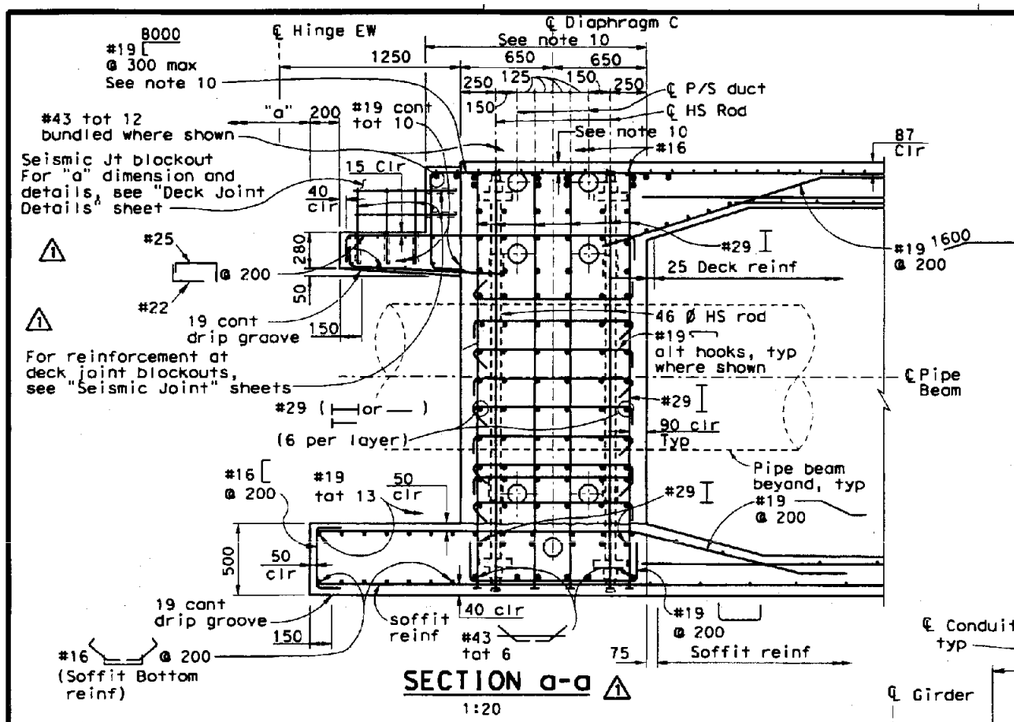

SECTION a-a △1
1:20

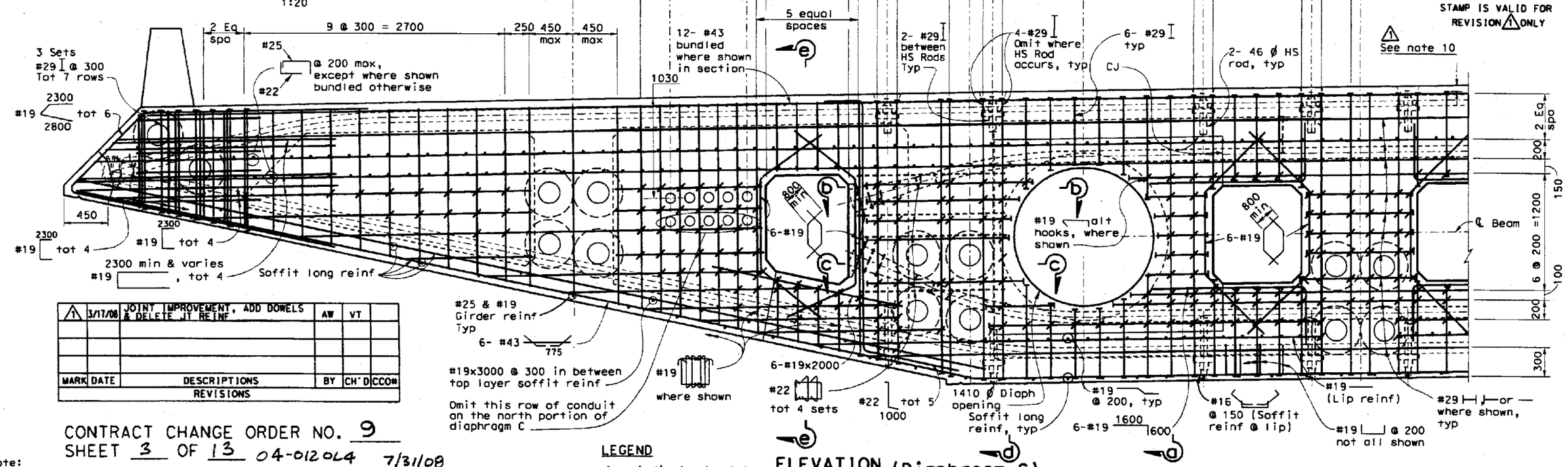

ELEVATION (Diaphragm C)
1:20

ALL DIMENSIONS ARE IN MILLIMETERS UNLESS OTHERWISE SHOWN

LEGEND
⊢ Indicates headed bar reinforcement

△1	3/17/08	JOINT IMPROVEMENT, ADD DOWELS & DELETE JT REINF	AW	VT	
MARK	DATE	DESCRIPTIONS	BY	CH'D	CCO#
		REVISIONS			

CONTRACT CHANGE ORDER NO. 9
SHEET 3 OF 13 04-0120L4 7/31/08

Note:
The Contractor shall verify all controlling field dimensions before ordering or fabricating any material

STAMP IS VALID FOR REVISION △1 ONLY

REGISTERED PROFESSIONAL ENGINEER ADAM TW WANG No. 40402 Exp. 3-31-2009 CIVIL STATE OF CALIFORNIA

REGISTERED PROFESSIONAL ENGINEER VINH DIEU TRINH No. 50685 Exp. 9-30-2009 CIVIL STATE OF CALIFORNIA

DESIGN OVERSIGHT
SAN ASRAD FRANCISCO CARPIO BERNARD CHAN HASAN EL-MATUR
SIGN OFF DATE

	BY	CHECKED
DESIGN	X. Wu	V. Trinh
DETAILS	A. Seguro	V. Trinh
QUANTITIES	C. Lin	D. Saretsky

PREPARED FOR THE STATE OF CALIFORNIA DEPARTMENT OF TRANSPORTATION

Adam Wang
PROJECT ENGINEER

BRIDGE NO. 34-0006L/R
KILOMETER POST 1.6

SAN FRANCISCO OAKLAND BAY BRIDGE
EAST SPAN SEISMIC SAFETY PROJECT

OAKLAND APPROACH STRUCTURES-PHASE 1

WESTBOUND HINGE EW DETAILS NO.11

Rev. Date: 5-8-98

ORIGINAL SCALE IN MILLIMETERS FOR REDUCED PLANS 0 10 20 30 40 50 60 70 80 90 100

CU 04
EA 0120L1

DISREGARD PRINTS BEARING EARLIER REVISION DATES

REVISION DATES (PRELIMINARY STAGE ONLY)

SHEET 119 OF 224

FILE => ...\04-0120L1-34-006-n-hingeo11.dgn

USERNAME => BUSER DATE PLOTTED => 6/16/2008 TIME PLOTTED => 10:02:27 AM

DIST	COUNTY	ROUTE	KILOMETER POST TOTAL PROJECT	SHEET NO.	TOTAL SHEETS
04	Ala	80	1.6/2.7	236R1	643

REGISTERED ENGINEER - CIVIL
1-29-07
PLANS APPROVAL DATE

REGISTERED PROFESSIONAL ENGINEER ADAM TM WANG No. 40402 Exp. 3-31-2009 CIVIL STATE OF CALIFORNIA

The State of California or its officers or agents shall not be responsible for the accuracy or completeness of electronic copies of this plan sheet.

T.Y. LIN / MOFFATT & NICHOL
TWO HARRISON STREET, SUITE 500
SAN FRANCISCO, CA 94105

W. KOO & ASSOCIATES, INC
625 THE CITY DRIVE SOUTH, SUITE 200
ORANGE, CA 92868

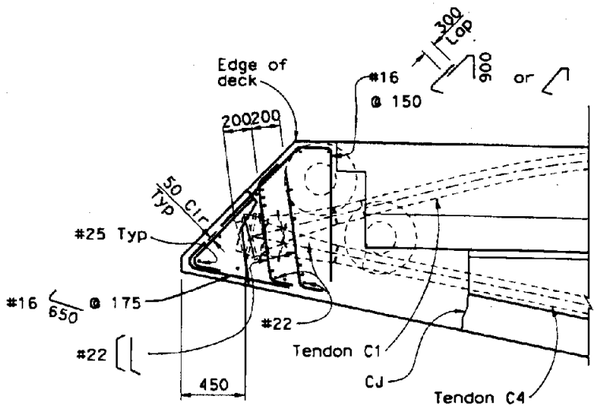

SECTION s-s
1:20

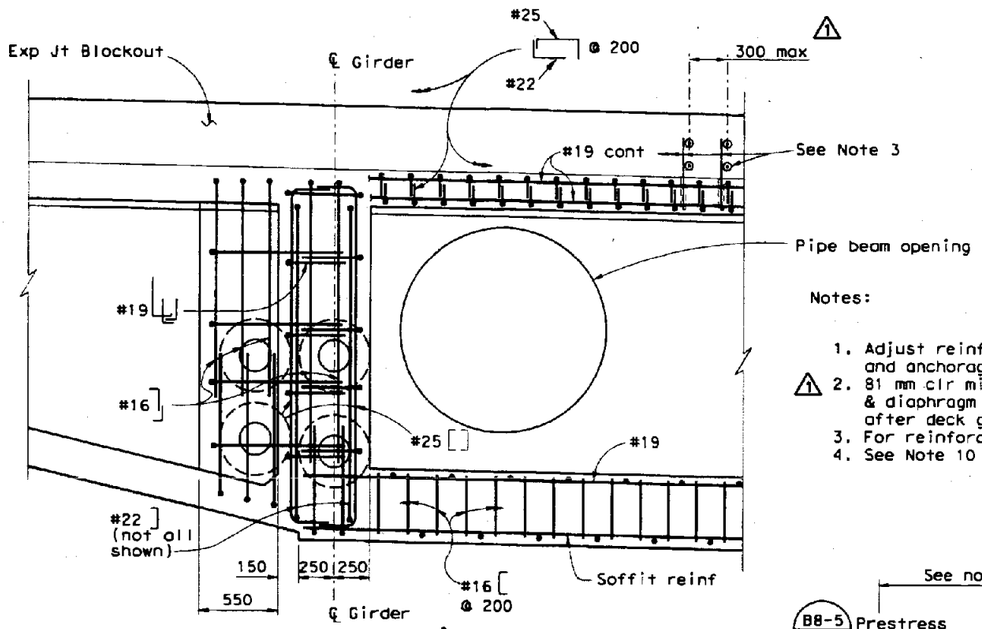

SECTION r-r
1:20

Notes:

1. Adjust reinforcement to clear prestressing tendons and anchorage.
2. 81 mm clr min shall be maintained for longitudinal reinf @ top deck & diaphragm rebars & top end of vertical headed bars after deck ground for seismic jt. Bend longitudinal reinf as required.
3. For reinforcement at deck joint blockouts, see "Seismic Joint" sheets.
4. See Note 10 on "Westbound Hinge FW Details No. 2" sheet.

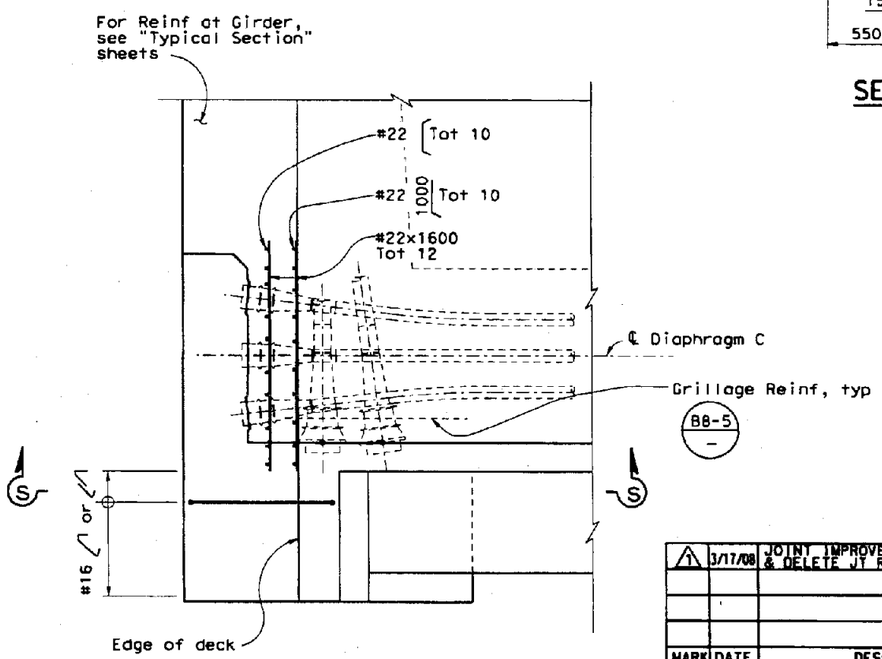

PARTIAL PLAN
1:20

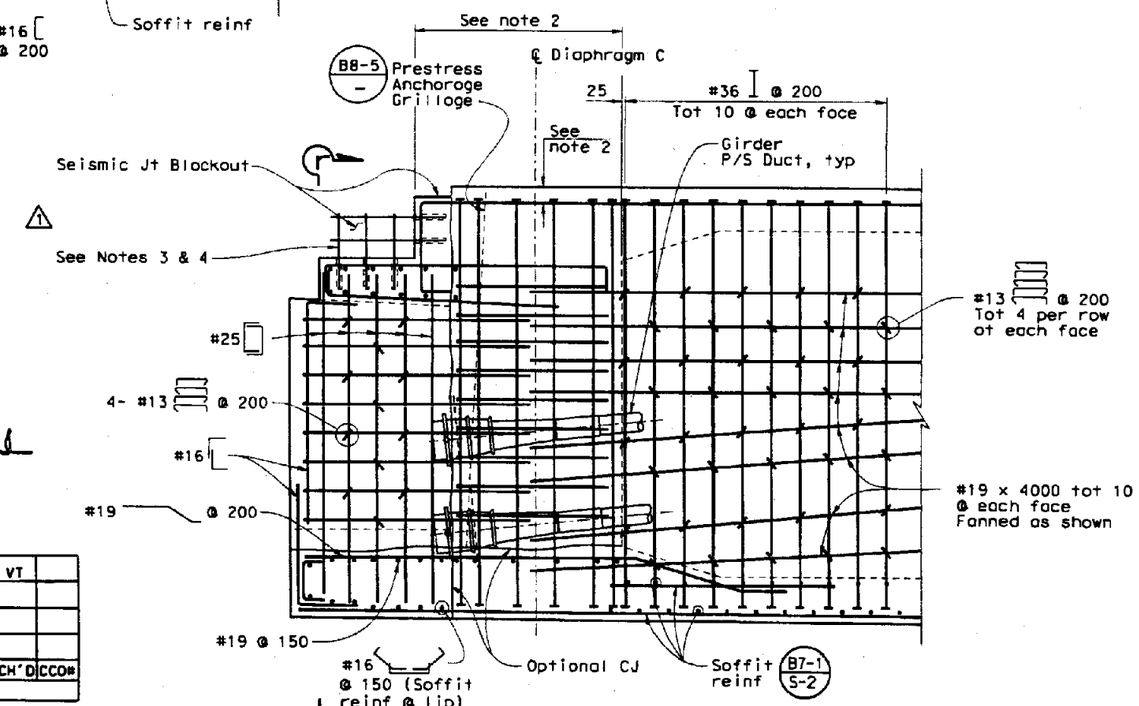

SECTION d-d
1:20

REGISTERED PROFESSIONAL ENGINEER VINH DIEU TRINH No. 50685 Exp. 9-30-2009 CIVIL STATE OF CALIFORNIA

STAMP IS VALID FOR REVISION 1 ONLY

MARK	DATE	DESCRIPTIONS	BY	CH'D	CCO#
1	3/17/08	JOINT IMPROVEMENT, ADD DOWELS & DELETE JT REINF	AW	VT	

REVISIONS

CONTRACT CHANGE ORDER NO. 9
SHEET 4 OF 13 04-0120L4 7/31/08

Note:
The Contractor shall verify all controlling field dimensions before ordering or fabricating any material

ALL DIMENSIONS ARE IN MILLIMETERS UNLESS OTHERWISE SHOWN

DESIGN OVERSIGHT
SAM AHMAD FRANCISCO CARPIO BERNARD CHAN HASAN EL-NATUR
SIGN OFF DATE
Rev. Date: 5-18-98

	BY	CHECKED
DESIGN	X. Wu	V. Trinh
DETAILS	A. Segura	V. Trinh
QUANTITIES	C. Lin	D. Saretsky

PREPARED FOR THE STATE OF CALIFORNIA DEPARTMENT OF TRANSPORTATION

Adam Wang
PROJECT ENGINEER

ORIGINAL SCALE IN MILLIMETERS FOR REDUCED PLANS 0 10 20 30 40 50 60 70 80 90 100

CU 04
EA 0120L1

BRIDGE NO. 34-0006L/R
KILOMETER POST 1.6

DISREGARD PRINTS BEARING EARLIER REVISION DATES

REVISION DATES (PRELIMINARY STAGE ONLY) 10/28/05 2/13/06 5/31/06 11/21/06 1/3/07 4/13/07 7/13/07 11/16/07 12/21/07 3/17/08

SHEET 123 OF 224

SAN FRANCISCO OAKLAND BAY BRIDGE
EAST SPAN SEISMIC SAFETY PROJECT

OAKLAND APPROACH STRUCTURES-PHASE 1

WESTBOUND HINGE EW DETAILS NO.15

FILENAME => $FILE$ DATE PLOTTED => $DATE$ TIME PLOTTED => $TIME$ USERNAME => $USER

DIST	COUNTY	ROUTE	KILOMETER POST TOTAL PROJECT	SHEET NO.	TOTAL SHEETS
04	Ala	80	1.6/2.7	237R1	643

Adam Wang
REGISTERED ENGINEER - CIVIL
1-29-07
PLANS APPROVAL DATE
The State of California or its officers or agents shall not be responsible for the accuracy or completeness of electronic copies of this plan sheet.

REGISTERED PROFESSIONAL ENGINEER ADAM TM WANG No. 40402 Exp. 3-31-2009 CIVIL STATE OF CALIFORNIA

T.Y. LIN / MOFFATT & NICHOL
TWO HARRISON STREET, SUITE 500
SAN FRANCISCO, CA 94105

W. KOO & ASSOCIATES, INC
625 THE CITY DRIVE SOUTH, SUITE 200
ORANGE, CA 92868

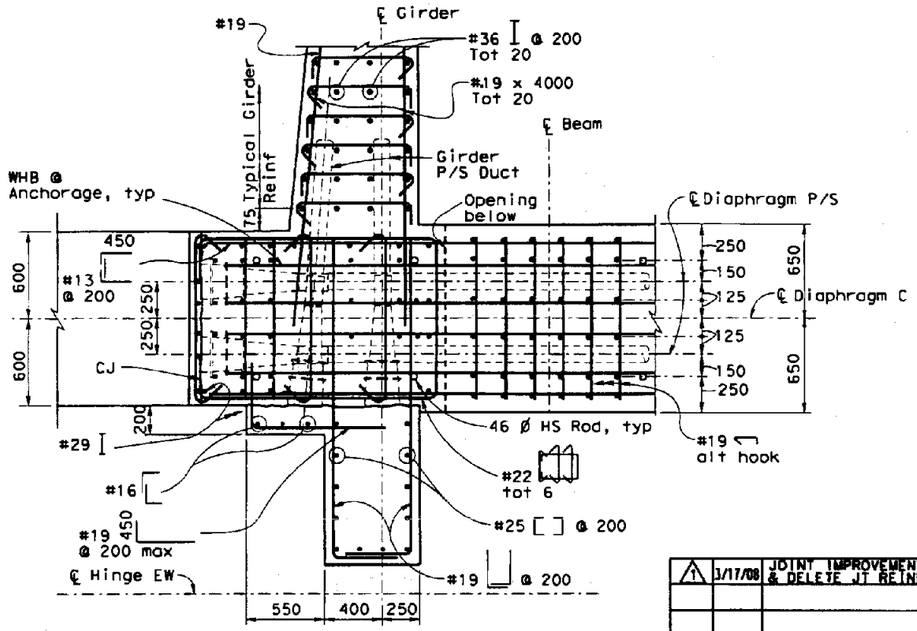

SECTION b-b
1:20

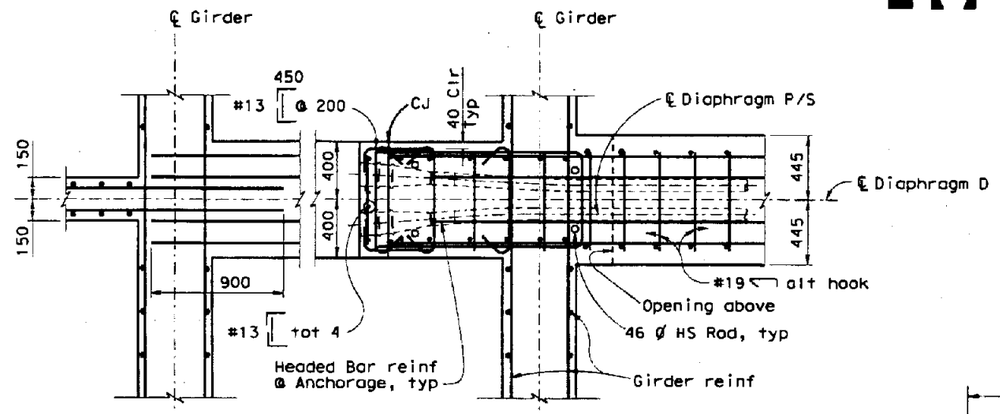

SECTION j-j
1:20

MARK	DATE	DESCRIPTIONS	BY	CH'D	CCO#
1	3/17/08	JOINT IMPROVEMENT, ADD DOWELS & DELETE JT REINF	AW	VT	
		REVISIONS			

CONTRACT CHANGE ORDER NO. 9
SHEET 5 OF 13 04-0120L4
7/31/08

REGISTERED PROFESSIONAL ENGINEER VINH DIEU TRINH No. 50685 Exp. 9-30-2009 CIVIL STATE OF CALIFORNIA

STAMP IS VALID FOR REVISION 1 ONLY

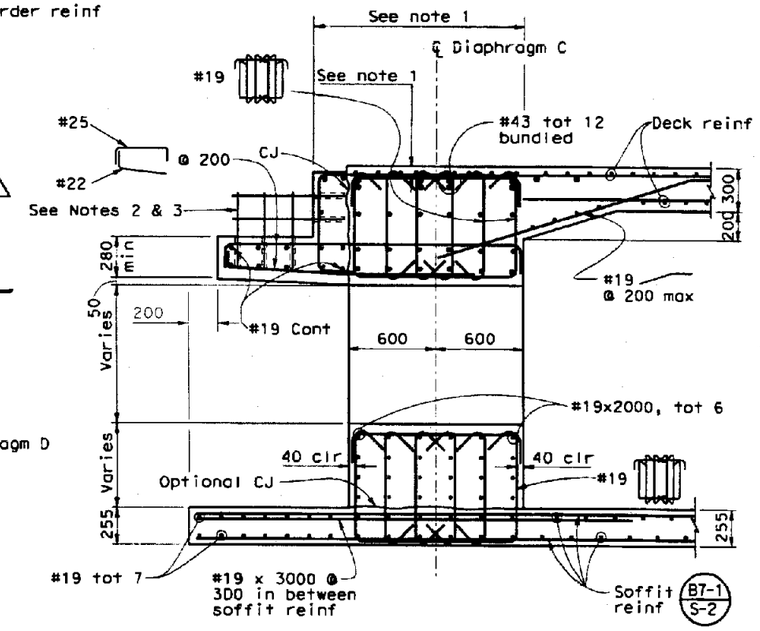

SECTION e-e
1:20

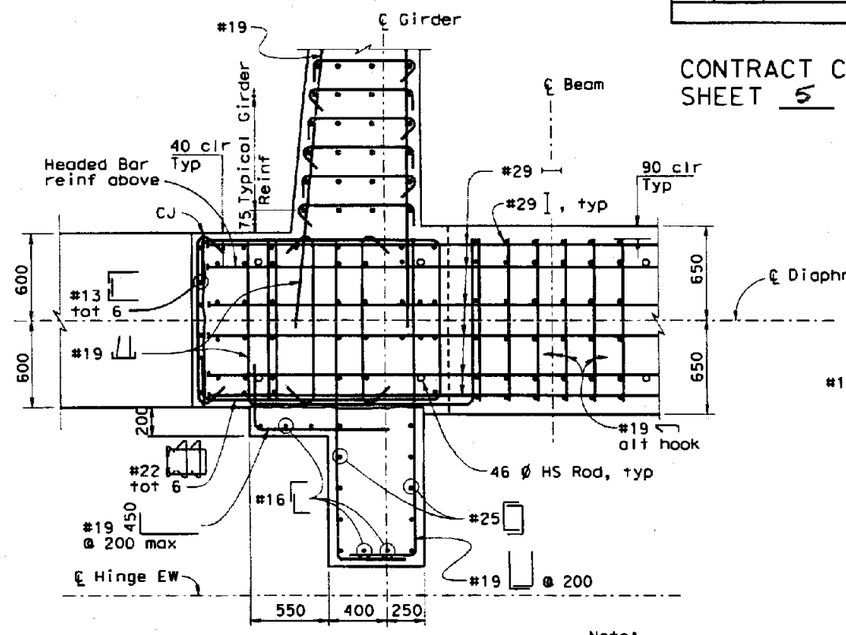

SECTION c-c
1:20

Note:
For reinforcement not shown, see "Section b-b"

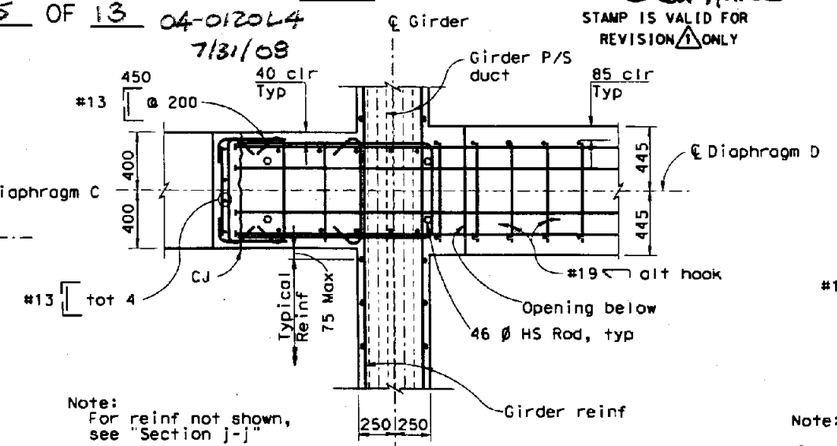

Note:
For reinf not shown, see "Section j-j"

SECTION k-k
1:20

LEGEND
⊢ Indicates headed bar reinforcement

Note:
1. 81 mm clr min should be maintained for longitudinal reinf @ top layer of deck & diaphragm rebars & top end of vertical headed bars after deck ground off for seismic jt. Bend longitudinal reinf as required.
2. For reinforcement at deck joint blockouts, see "Seismic Joint" sheets.
3. See Note 10 on "Westbound Hinge FW Details No. 2" sheet.

Note:
The Contractor shall verify all controlling field dimensions before ordering or fabricating any material

ALL DIMENSIONS ARE IN MILLIMETERS UNLESS OTHERWISE SHOWN

DESIGN OVERSIGHT
SAM AKKAD FRANCISCO CARPIO BERNARD CHAN NASAN EL-NATUR
SIGN OFF DATE
Rev. Date: 5-8-98

DESIGN	BY X. Wu	CHECKED V. Trinh	
DETAILS	BY A. Segura	CHECKED V. Trinh	
QUANTITIES	BY C. Lin	CHECKED D. Soretsky	

ORIGINAL SCALE IN MILLIMETERS FOR REDUCED PLANS 0 10 20 30 40 50 60 70 80 90 100

PREPARED FOR THE STATE OF CALIFORNIA DEPARTMENT OF TRANSPORTATION

Adam Wang
PROJECT ENGINEER

CU 04
EA 0120L1

BRIDGE NO. 34-0006L/R
KILOMETER POST 1.6

DISREGARD PRINTS BEARING EARLIER REVISION DATES

REVISION DATES (PRELIMINARY STAGE ONLY) 10/20/04 3/21/05 5/20/05 11/20/05 1/13/06 4/07/06 7/20/06 11/14/06 10/19/07 2/17/08

SAN FRANCISCO OAKLAND BAY BRIDGE
EAST SPAN SEISMIC SAFETY PROJECT

OAKLAND APPROACH STRUCTURES-PHASE 1

WESTBOUND HINGE EW DETAILS NO.16

SHEET 124 OF 224

FILENAME => $FILE$ DATE PLOTTED => $DATE$ TIME PLOTTED => $TIME$ USERNAME => $USER

DIST.	COUNTY	ROUTE	KILOMETER POST TOTAL PROJECT	SHEET NO.	TOTAL SHEETS
04	Ala	80	1.6/2.7	248R1	643

REGISTERED ENGINEER - CIVIL

1-29-07

PLANS APPROVAL DATE

REGISTERED PROFESSIONAL ENGINEER MOHAN S. CHAR No. C057894 Exp. 6/30/08 CIVIL STATE OF CALIFORNIA

The State of California or its officers or agents shall not be responsible for the accuracy or completeness of electronic copies of this plan sheet.

T.Y. LIN / MOFFATT & NICHOL
TWO HARRISON STREET, SUITE 500
SAN FRANCISCO, CA 94105

LIM & NASCIMENTO ENGINEERING CORPORATION
12 MAUCHLY, BLDG L
IRVINE, CA 92618

Notes:

1. For additional reinforcement, see "Eastbound Hinge EE Details No.12" sheet.
2. Adjust reinforcement to clear prestressing tendons.
3. For Section b-b, Section c-c and Section e-e, see "Eastbound Hinge EE Details No.16" sheet.
4. For Section d-d, see "Eastbound Hinge EE Details No.15" sheet.
5. Epoxy coat reinforcement for Diaphragm C shown on this sheet.
6. Adjust headed reinforcement to clear prestressing bars.
7. Longitudinal girder P/S duct shown for 6 ducts @ interior girders. P/S ducts and reinforcing for 4 ducts layout are similar except where there are no ducts interfering, reinforcing should be made continuously.
8. Other reinforcing is not shown for clarity.
9. Electrical conduits shown for reference only. For actual locations & No. of conduits, see "Electrical Plans".
10. △1 81 mm minimum clearance shall be maintained for reinforcement at top layer of deck & diaphragm rebars, and top end of vertical headed bars.

△1 Notes: (cont)

11. If using drill & bond dowels at seismic joint blockouts, Contractor shall provide a permanent means for identifying locations for installing dowels after concreting.

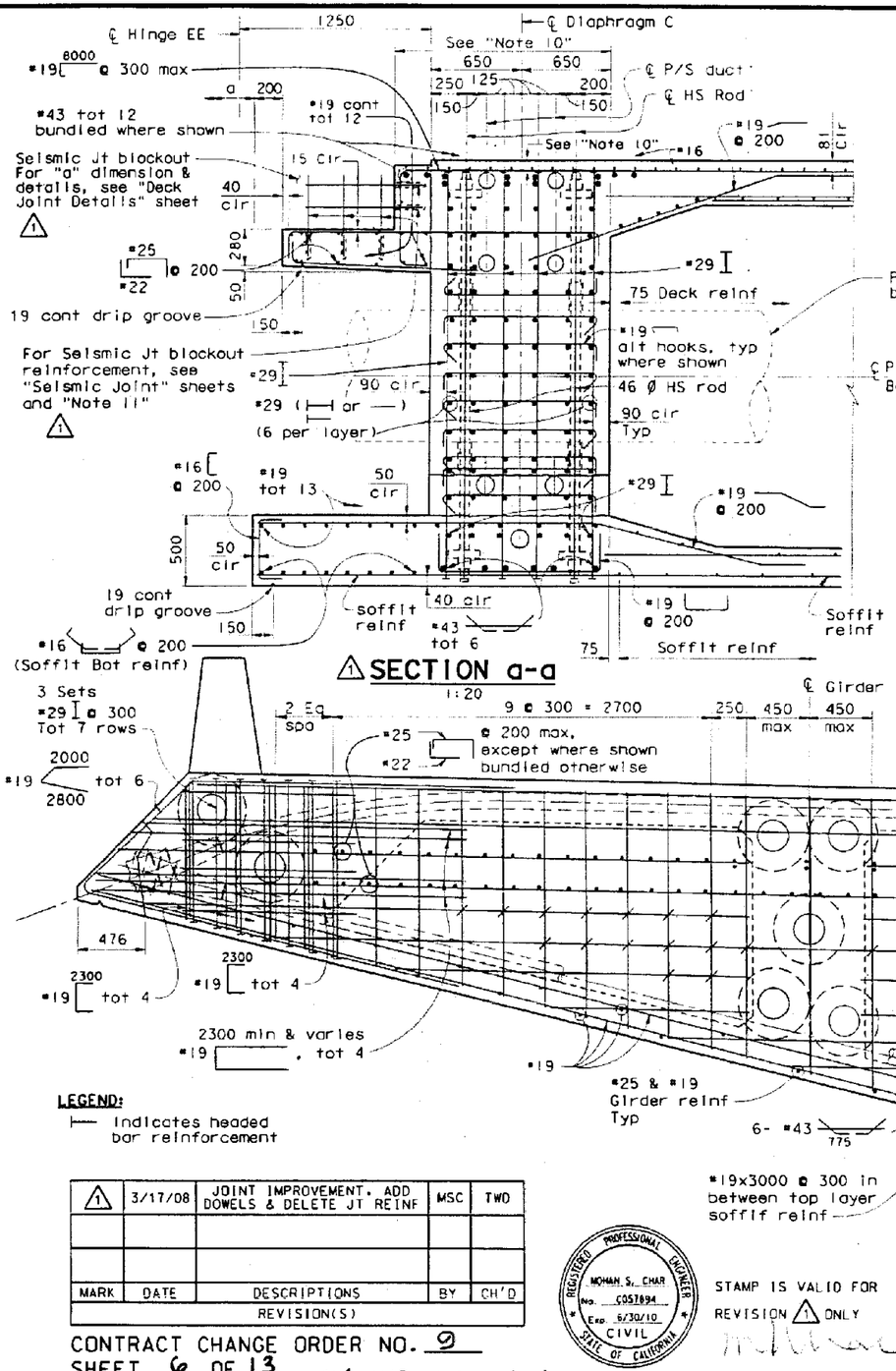

△1 SECTION a-a

1:20

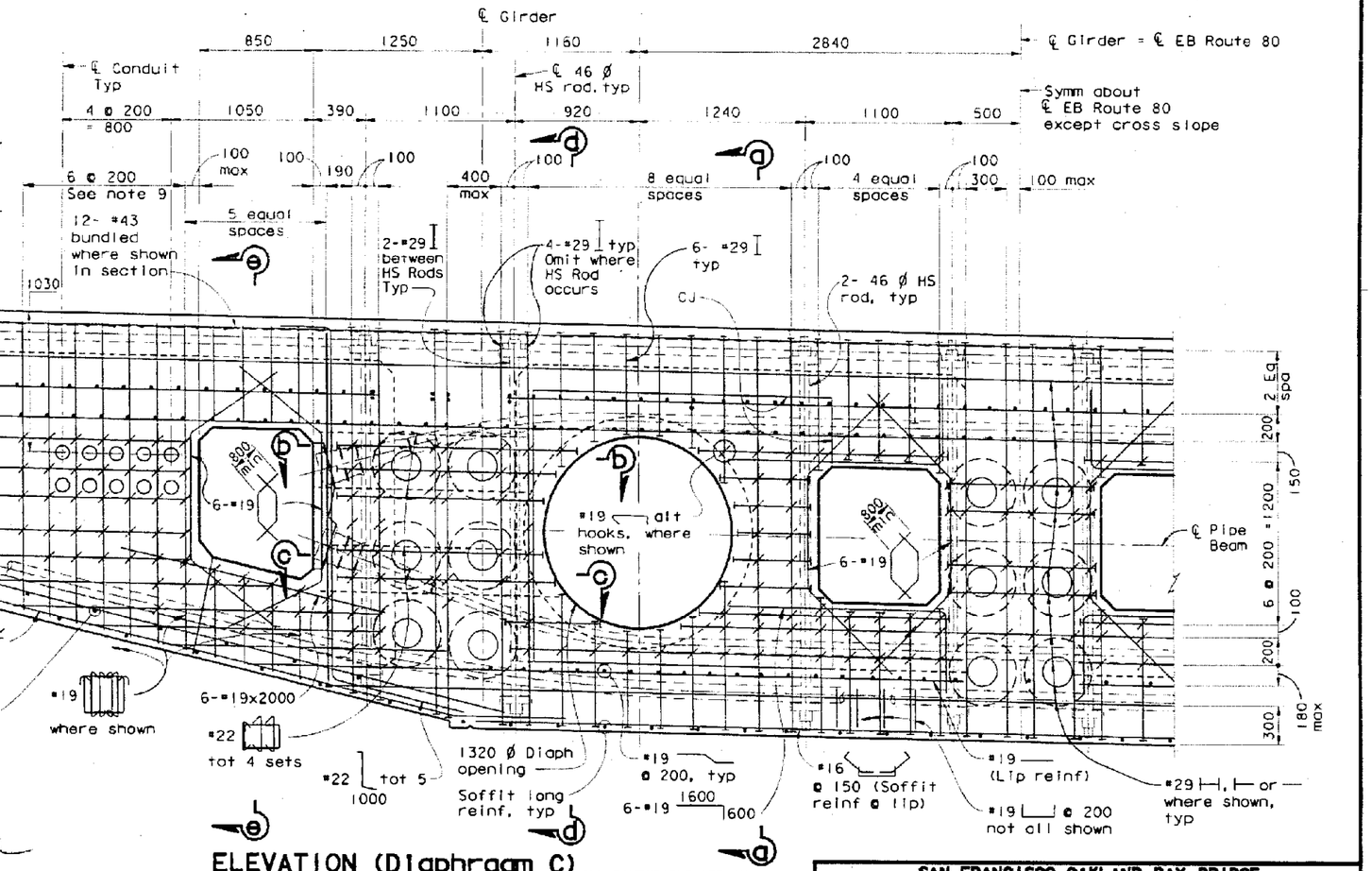

ELEVATION (Diaphragm C)

1:20

ALL DIMENSIONS ARE IN MILLIMETERS UNLESS OTHERWISE SHOWN

LEGEND:

⊢ Indicates headed bar reinforcement

△1	3/17/08	JOINT IMPROVEMENT, ADD DOWELS & DELETE JT REINF	MSC	TWD
MARK	DATE	DESCRIPTIONS	BY	CH'D
		REVISION(S)		

REGISTERED PROFESSIONAL ENGINEER MOHAN S. CHAR No. C057894 Exp. 6/30/10 CIVIL STATE OF CALIFORNIA

STAMP IS VALID FOR REVISION △1 ONLY

CONTRACT CHANGE ORDER NO. 9

SHEET 6 OF 13 04-0120L4 7/31/08

DESIGN OVERSIGHT

Sam AKRAD FRANCISCO CARPIO BERNARD CHAN HASAN EL-NATUR

SIGN OFF DATE

Rev. Date: 5-18-98

DESIGN	BY M. CHAR	CHECKED T. DUDLEY
DETAILS	BY N. MORCILLO/M. ANDRASEK	CHECKED M. CHAR
QUANTITIES	BY N. MORCILLO/Y. KIM	CHECKED V. SIVAKOLUNDU/T. DUDLEY

PREPARED FOR THE STATE OF CALIFORNIA DEPARTMENT OF TRANSPORTATION

MOHAN S. CHAR
PROJECT ENGINEER

BRIDGE NO 34-0006L/R
KILOMETER POST 1.6

SAN FRANCISCO OAKLAND BAY BRIDGE
EAST SPAN SEISMIC SAFETY PROJECT

OAKLAND APPROACH STRUCTURES - PHASE I

EASTBOUND HINGE EE DETAILS NO. 11

ORIGINAL SCALE IN MILLIMETERS FOR REDUCED PLANS 0 10 20 30 40 50 60 70 80 90 100

CU 04
EA 0120L1

DISREGARD PRINTS BEARING EARLIER REVISION DATES

SHEET 135 OF 224

DIST.	COUNTY	ROUTE	KILOMETER POST TOTAL PROJECT	SHEET NO.	TOTAL SHEETS
04	Ala	80	1.6/2.7	252R1	643

REGISTERED ENGINEER - CIVIL

1-29-07
PLANS APPROVAL DATE

REGISTERED PROFESSIONAL ENGINEER MOHAN S. CHAR No. C057894 Exp. 6/30/08 CIVIL STATE OF CALIFORNIA

The State of California or its officers or agents shall not be responsible for the accuracy or completeness of electronic copies of this plan sheet.

T.Y. LIN / MOFFATT & NICHOL
TWO HARRISON STREET, SUITE 500
SAN FRANCISCO, CA 94105

LIM & NASCIMENTO ENGINEERING CORPORATION
12 MAUCHLY, BLDG L
IRVINE, CA 92618

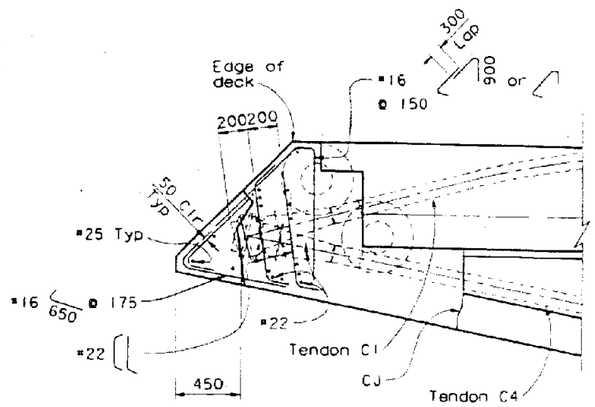

SECTION s-s
1:20

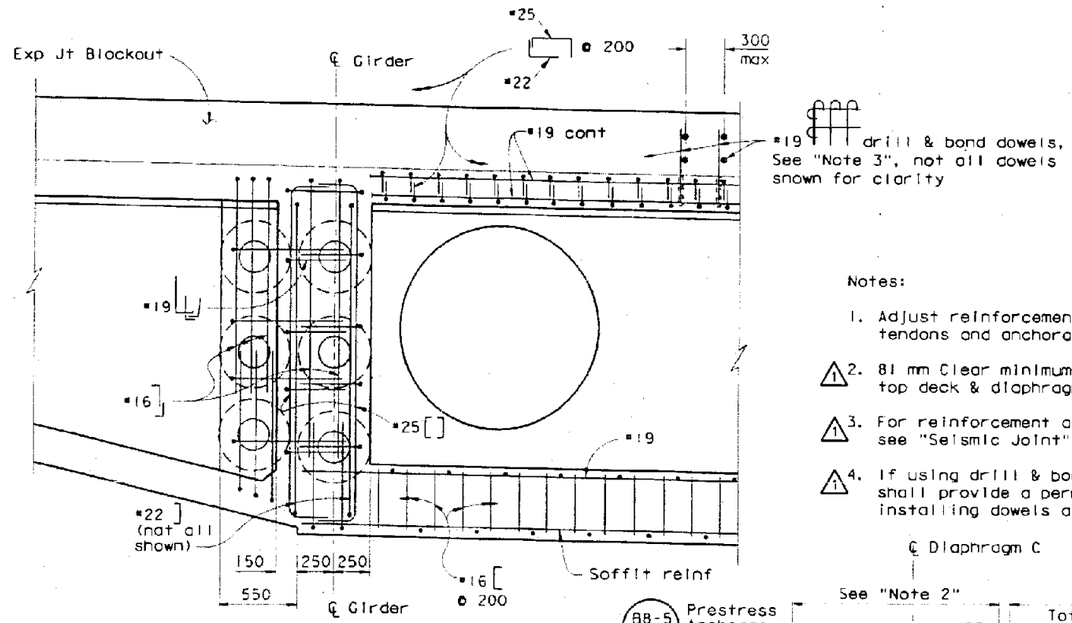

SECTION r-r
1:20

Notes:

1. Adjust reinforcement to clear prestressing tendons and anchorages.
2. △1 81 mm Clear minimum shall be maintained for longitudinal reinf at top deck & diaphragm rebars & top end of vertical headed bars.
3. △1 For reinforcement and anchor bolts at deck joint blockouts, see "Seismic Joint" sheets.
4. △1 If using drill & bond dowels at seismic joint blockouts, Contractor shall provide a permanent means of identifying locations for installing dowels after concreting.

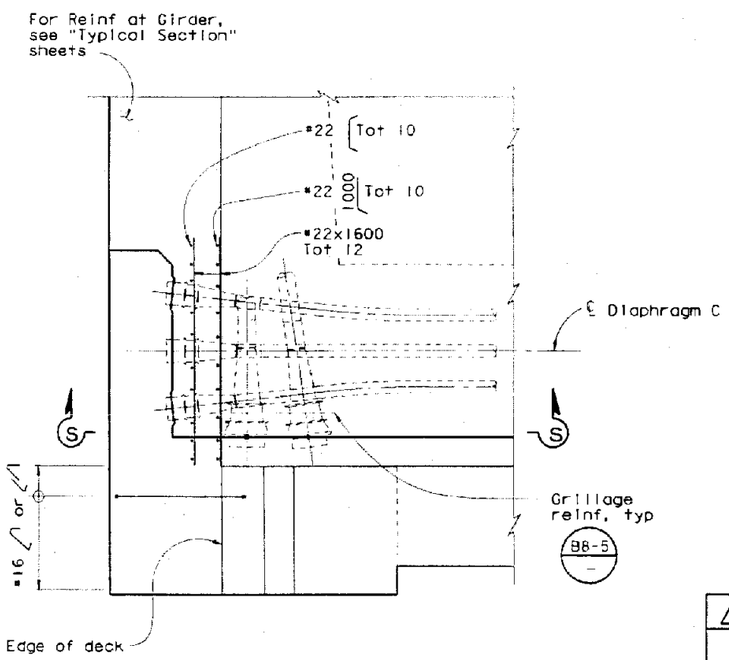

PARTIAL PLAN
1:20

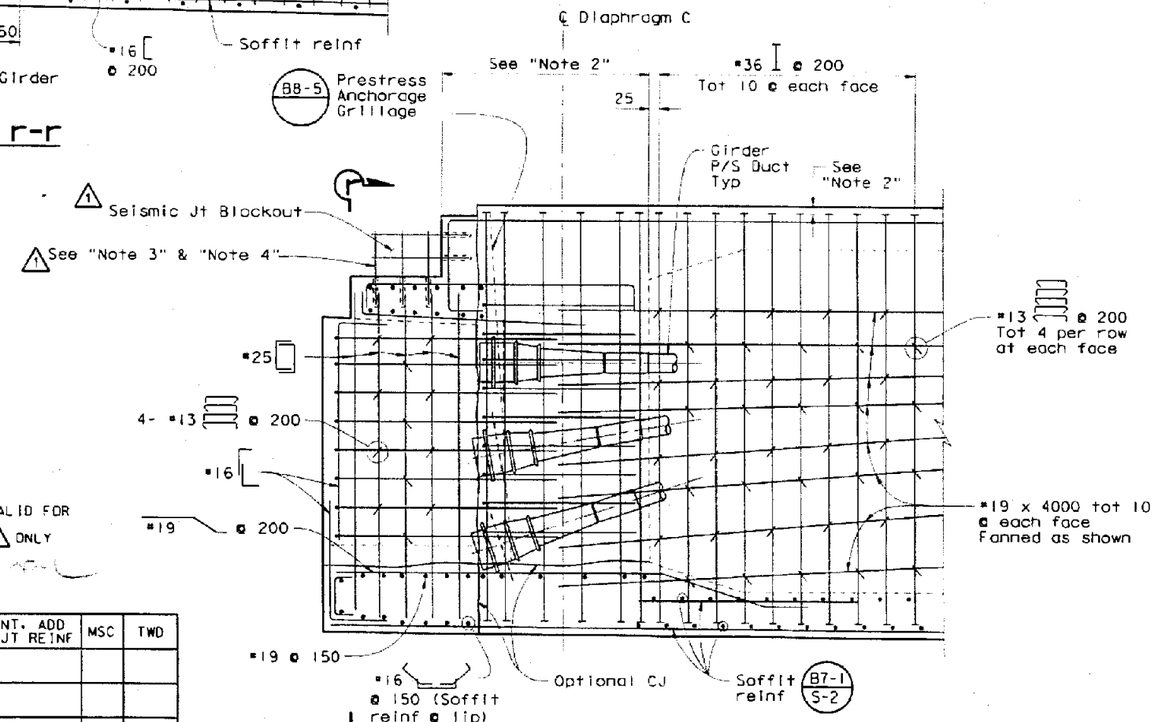

SECTION d-d △1
1:20

STAMP IS VALID FOR REVISION △1 ONLY

△1	3/17/08	JOINT IMPROVEMENT. ADD DOWELS & DELETE JT REINF	MSC	TWD
MARK	DATE	DESCRIPTIONS	BY	CH'D
		REVISION(S)		

CONTRACT CHANGE ORDER NO. 9
SHEET 7 OF 13 04-0120L4 7/31/08

ALL DIMENSIONS ARE IN MILLIMETERS UNLESS OTHERWISE SHOWN

DESIGN OVERSIGHT
SAM AKKAD FRANCISCO CARPIO BERNARD CHAN HASAN EL-NATUR
SIGN OFF DATE
Rev Date: 5-18-98

	BY	CHECKED
DESIGN	M. CHAR	T. DUDLEY
DETAILS	N. MORCILLO/M. ANDRASEK	M. CHAR
QUANTITIES	N. MORCILLO/Y. KIM	V. SIVAKOLUNDU/T. DUDLEY

PREPARED FOR THE STATE OF CALIFORNIA DEPARTMENT OF TRANSPORTATION

MOHAN S. CHAR
PROJECT ENGINEER

CU 04
EA 0120L1

BRIDGE NO 34-0006L/R
KILOMETER POST 1.6

SAN FRANCISCO OAKLAND BAY BRIDGE
EAST SPAN SEISMIC SAFETY PROJECT

OAKLAND APPROACH STRUCTURES - PHASE I

EASTBOUND HINGE EE DETAILS NO. 15

ORIGINAL SCALE IN MILLIMETERS FOR REDUCED PLANS 0 10 20 30 40 50 60 70 80 90 100

DISREGARD PRINTS BEARING EARLIER REVISION DATES

DIST.	COUNTY	ROUTE	KILOMETER POST TOTAL PROJECT	SHEET NO.	TOTAL SHEETS
04	Ala	80	1.6/2.7	253R1	643

Caltrans Metric

REGISTERED ENGINEER - CIVIL

1-29-07
PLANS APPROVAL DATE

REGISTERED PROFESSIONAL ENGINEER MOHAN S. CHAR No. C057894 Exp. 6/30/08 CIVIL STATE OF CALIFORNIA

The State of California or its officers or agents shall not be responsible for the accuracy or completeness of electronic copies of this plan sheet.

T.Y. LIN / MOFFATT & NICHOL
TWO HARRISON STREET, SUITE 500
SAN FRANCISCO, CA 94105

LIM & NASCIMENTO ENGINEERING CORPORATION
12 MAUCHLY, BLDG L
IRVINE, CA 92618

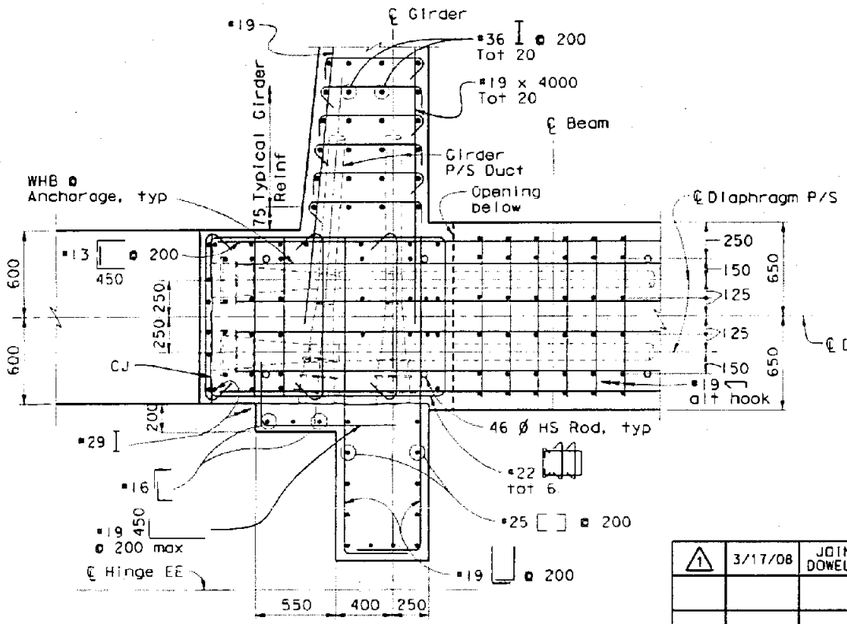

SECTION b-b
1:20

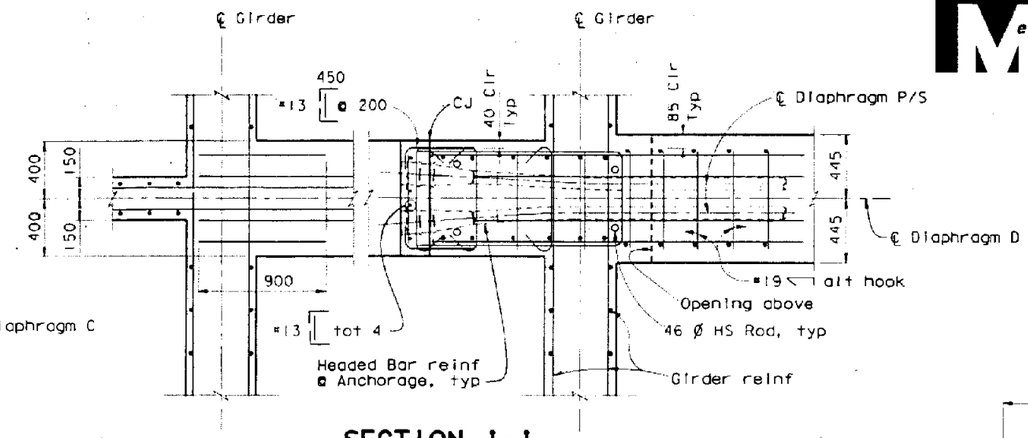

SECTION J-J
1:20

MARK	DATE	DESCRIPTIONS	BY	CH'D
1	3/17/08	JOINT IMPROVEMENT, ADD DOWELS & DELETE JT REINF	MSC	TWD

REVISION(S)

CONTRACT CHANGE ORDER NO. 9
SHEET 8 OF 13 04-012064
7/21/08

PROFESSIONAL ENGINEER MOHAN S. CHAR No. C057894 Exp. 6/30/10 CIVIL STATE OF CALIFORNIA

STAMP IS VALID FOR REVISION 1 ONLY

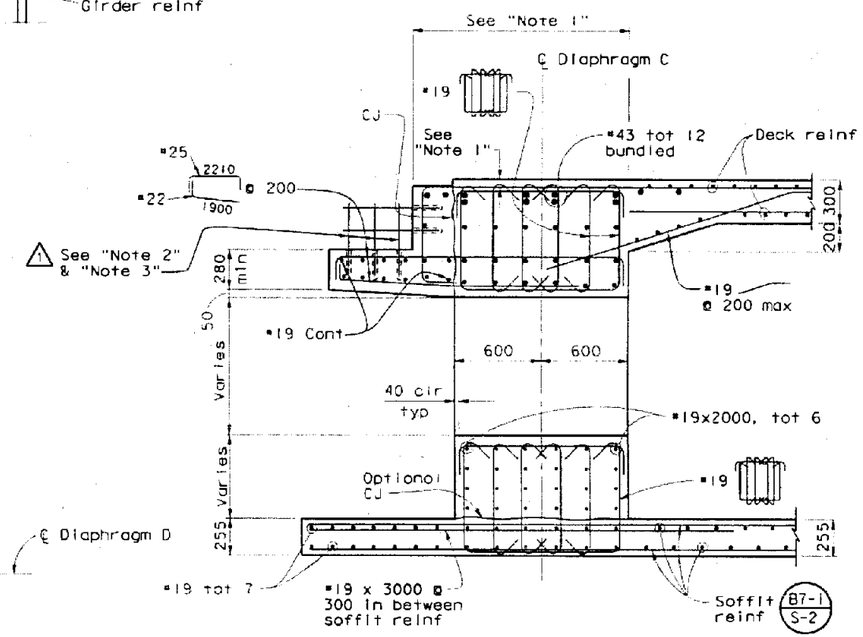

SECTION e-e 1
1:20

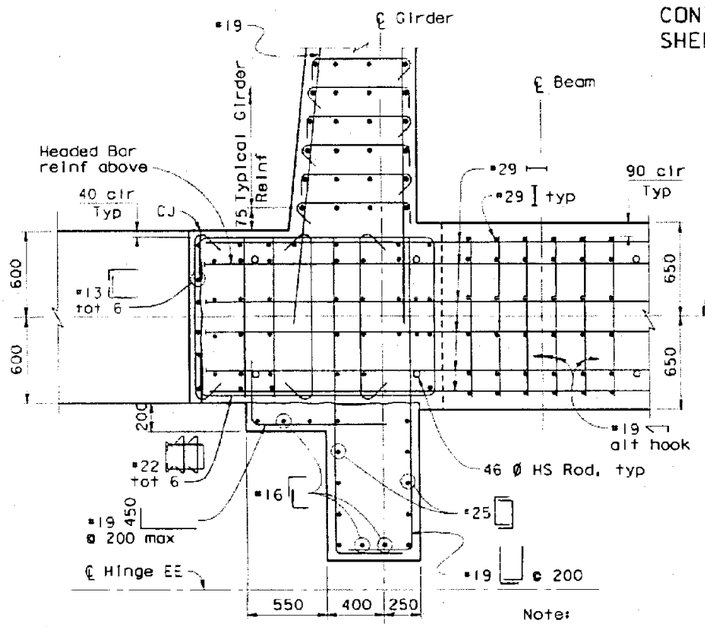

SECTION c-c
1:20

Note:
For reinforcement not shown, see "Section b-b"

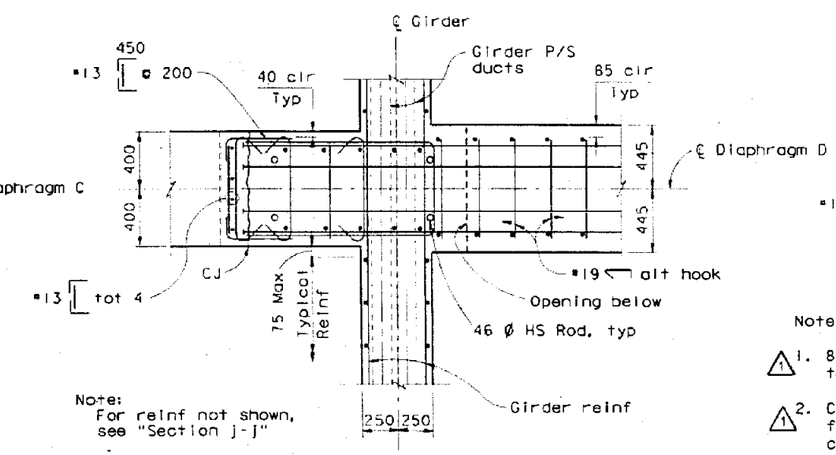

Note:
For reinf not shown, see "Section j-j"

SECTION k-k
1:20

LEGEND:

⊢ Indicates needed bar reinforcement

Notes:

1. 81 mm Clear minimum shall be maintained for longitudinal reinf @ top deck & diaphragm rebars & top end of vertical headed bars.
2. Contractor shall prepare details for drill & bond dowel locations for Engineer's approval. In lieu of drill & bond dowels, Contractor can use cast in place hooked dowel instead without additional cost to Caltrans.
3. If using drill & bond dowels at seismic joint blockouts, Contractor shall provide a permanent means of identifying locations for installing dowels after concreting.

ALL DIMENSIONS ARE IN MILLIMETERS UNLESS OTHERWISE SHOWN

DESIGN OVERSIGHT
SAM AAKAD FRANCISCO CARPIO BERNARD CHAN HASAN EL-NATUR
SIGN OFF DATE

	BY	CHECKED
DESIGN	M. CHAR	T. DUDLEY
DETAILS	N. MORCILLO/M. ANDRASEK	M. CHAR
QUANTITIES	N. MORCILLO/Y. KIM	V. SIVAKOLUNDU/T. DUDLEY

PREPARED FOR THE STATE OF CALIFORNIA DEPARTMENT OF TRANSPORTATION

MOHAN S. CHAR
PROJECT ENGINEER

CU 04
EA 0120L1

BRIDGE NO. 34-0006L/R
KILOMETER POST 1.6

SAN FRANCISCO OAKLAND BAY BRIDGE
EAST SPAN SEISMIC SAFETY PROJECT

OAKLAND APPROACH STRUCTURES - PHASE I

EASTBOUND HINGE EE DETAILS NO. 16

Rev. Date: 5-18-98

ORIGINAL SCALE IN MILLIMETERS FOR REDUCED PLANS 0 10 20 30 40 50 60 70 80 90 100

DISREGARD PRINTS BEARING EARLIER REVISION DATES

REVISION DATES NOT MINOR STATE ENGINEER

DIST	COUNTY	ROUTE	KILOMETER POST TOTAL PROJECT	SHEET NO.	TOTAL SHEETS
04	Ala	80	1.6/2.7	262R1	643

Adam Wang
REGISTERED ENGINEER - CIVIL
1-29-07
PLANS APPROVAL DATE

REGISTERED PROFESSIONAL ENGINEER ADAM TM WANG No. 40402 Exp. 3-31-2009 CIVIL STATE OF CALIFORNIA

The State of California or its officers or agents shall not be responsible for the accuracy or completeness of electronic copies of this plan sheet.

T.Y. LIN / MOFFATT & NICHOL
TWO HARRISON STREET, SUITE 500
SAN FRANCISCO, CA 94105

W. KOO & ASSOCIATES, INC
625 THE CITY DRIVE SOUTH, SUITE 200
ORANGE, CA 92868

REGISTERED PROFESSIONAL ENGINEER VINH DIEU TRINH No. 50685 Exp. 9-30-2009 CIVIL STATE OF CALIFORNIA

STAMP IS VALID FOR REVISION 1 ONLY

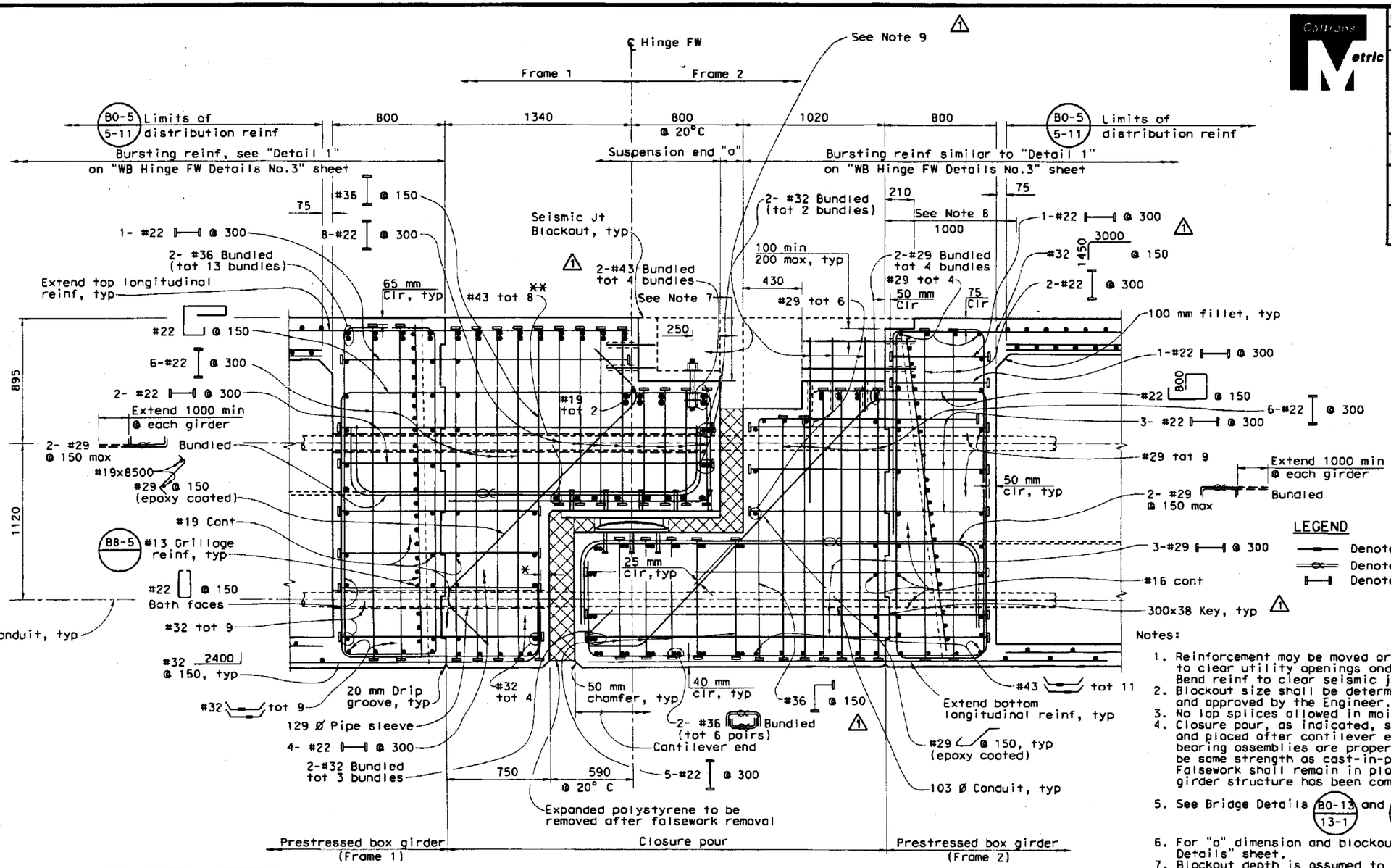

SECTION E-E
1:15

* - 75 mm Clr, typ
** - Terminate 900 mm beyond ℄ first interior girder

LEGEND
- Denotes mechanical splice
- Denotes bundled bars
- Denotes headed bar (both ends)

Notes:

1. Reinforcement may be moved or bundled in 2-bar bundles to clear utility openings and expansion Jt assembly. Bend reinf to clear seismic joint assembly as required.
2. Blockout size shall be determined by the Contractor and approved by the Engineer.
3. No lap splices allowed in main diaphragm reinforcement.
4. Closure pour, as indicated, shall be cast-in-place concrete and placed after cantilever end of hinge is constructed and bearing assemblies are properly positioned. Concrete shall be same strength as cast-in-place prestressed concrete. Falsework shall remain in place until prestress in box girder structure has been completed.
5. See Bridge Details B0-13/13-1 and B0-13/13-2
6. For "a" dimension and blockout details, see "Deck Joint Details" sheet.
7. Blockout depth is assumed to be 450 mm max. Contractor shall submit the adjusted detail of reinf for approval, if the blockout depth is altered.
8. 75 mm Clr min shall be maintained for longitudinal reinf @ top layer of deck & diaphragm rebars & top end of vertical headed bars after deck ground off for simisic jt. Bend longitudinal reinf as required.
9. For reinforcement and anchor bolts at deck joint blockouts, see "Seismic Joint" sheets.
10. If using drill & bond dowels at seismic joint blockouts. Contractor shall provide a permanent means for identifying locations for installing dowels after concreting.

MARK	DATE	DESCRIPTIONS	BY	CH'D	CCO#
1	3/17/08	JOINT IMPROVEMENT, ADD DOWELS & DELETE JT REINF	AW	VT	
		REVISIONS			

CONTRACT CHANGE ORDER NO. 9
SHEET 9 OF 13 04-0120L4 7/31/08

ALL DIMENSIONS ARE IN MILLIMETERS UNLESS OTHERWISE SHOWN

SAN FRANCISCO OAKLAND BAY BRIDGE
EAST SPAN SEISMIC SAFETY PROJECT

OAKLAND APPROACH STRUCTURES-PHASE 1

WESTBOUND HINGE FW DETAILS NO.2

DESIGN OVERSIGHT
SAM AKKAD FRANCISCO CARPIO BERNARD CHAN HASAN EL-NATUR
SIGN OFF DATE

	BY	CHECKED
DESIGN	X. Wu	A. Moubayed
DETAILS	G. Buelow	A. Moubayed
QUANTITIES	X. Wu	H. Haroun

PREPARED FOR THE STATE OF CALIFORNIA DEPARTMENT OF TRANSPORTATION

Adam Wang
PROJECT ENGINEER

BRIDGE NO. 34-0006L/R
KILOMETER POST 1.6

CU 04
EA 0120L1

DISREGARD PRINTS BEARING EARLIER REVISION DATES

REVISION DATES (PRELIMINARY STAGE ONLY) 10/29/04 2/2/05 5/27/05 11/04/05 1/3/06 4/17/06 1/29/06 11/6/06 10/2/07 3/17/08

SHEET 149 OF 224

ORIGINAL SCALE IN MILLIMETERS FOR REDUCED PLANS 0 10 20 30 40 50 60 70 80 90 100

Rev. Date: 5-18-98

FILENAME => $FILE$ DATE PLOTTED => $DATE$ TIME PLOTTED => $TIME$

USERNAME => $USER

MARK	DATE	DESCRIPTIONS	BY	CH'D	CCO#
1	3/17/08	JOINT IMPROVEMENT, ADD DOWELS & DELETE JT REINF	AW	VT	

REVISIONS

DIST	COUNTY	ROUTE	KILOMETER POST TOTAL PROJECT	SHEET NO.	TOTAL SHEETS
04	Ala	80	1.6/2.7	263R1	643

Adam Wang
REGISTERED ENGINEER - CIVIL
1-29-07
PLANS APPROVAL DATE

The State of California or its officers or agents shall not be responsible for the accuracy or completeness of electronic copies of this plan sheet.

REGISTERED PROFESSIONAL ENGINEER ADAM TM WANG No. 40402 Exp. 3-31-2009 CIVIL STATE OF CALIFORNIA

T.Y. LIN / MOFFATT & NICHOL
TWO HARRISON STREET, SUITE 500
SAN FRANCISCO, CA 94105

W. KOO & ASSOCIATES, INC
625 THE CITY DRIVE SOUTH, SUITE 200
ORANGE, CA 92868

REGISTERED PROFESSIONAL ENGINEER VINH DIEU TRINH No. 50685 Exp. 9-30-2009 CIVIL STATE OF CALIFORNIA

CONTRACT CHANGE ORDER NO. 9
SHEET 10 OF 13 04-0120L4
7/31/08

STAMP IS VALID FOR REVISION 1 ONLY

Collins Metric

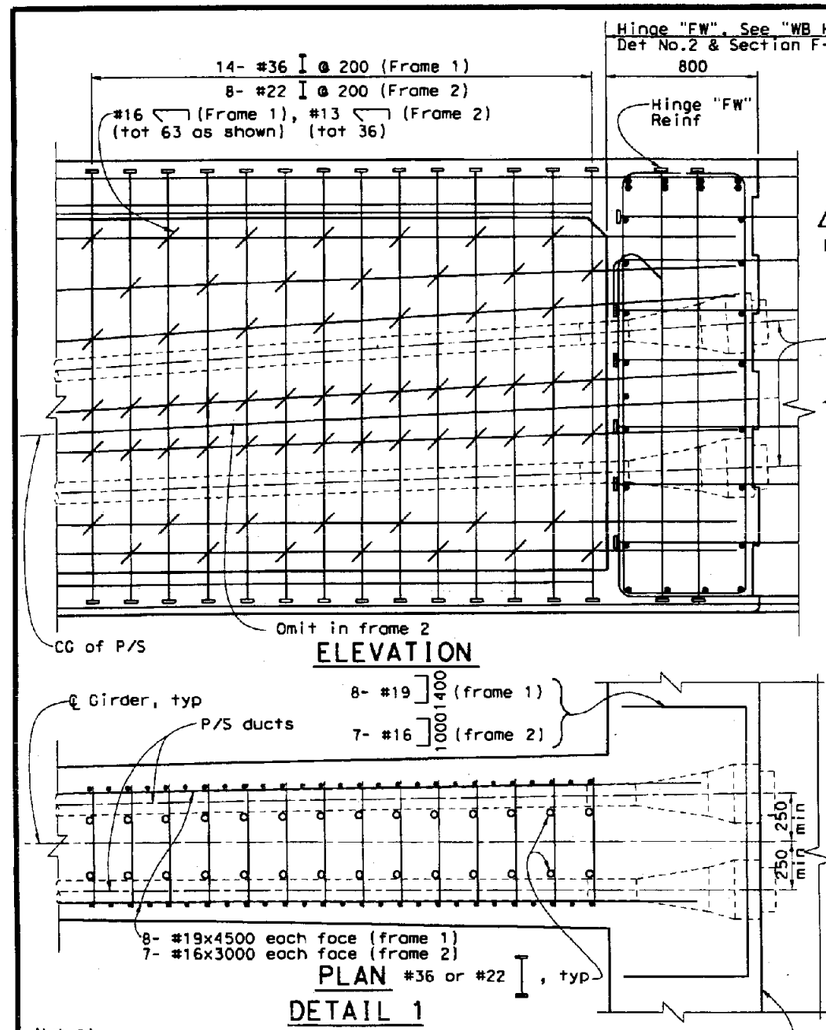

ELEVATION

PLAN

DETAIL 1
1:15

LEGEND
- Denotes mechanical splice
- Denotes bundled bars
- Denotes headed bar (both ends)

1 Note:
Additional bursting reinf shown @ end of frame 1 is typical for each interior Girder, reinf for each interior Girder @ beginning of frame 2 is similar but opposite hand.

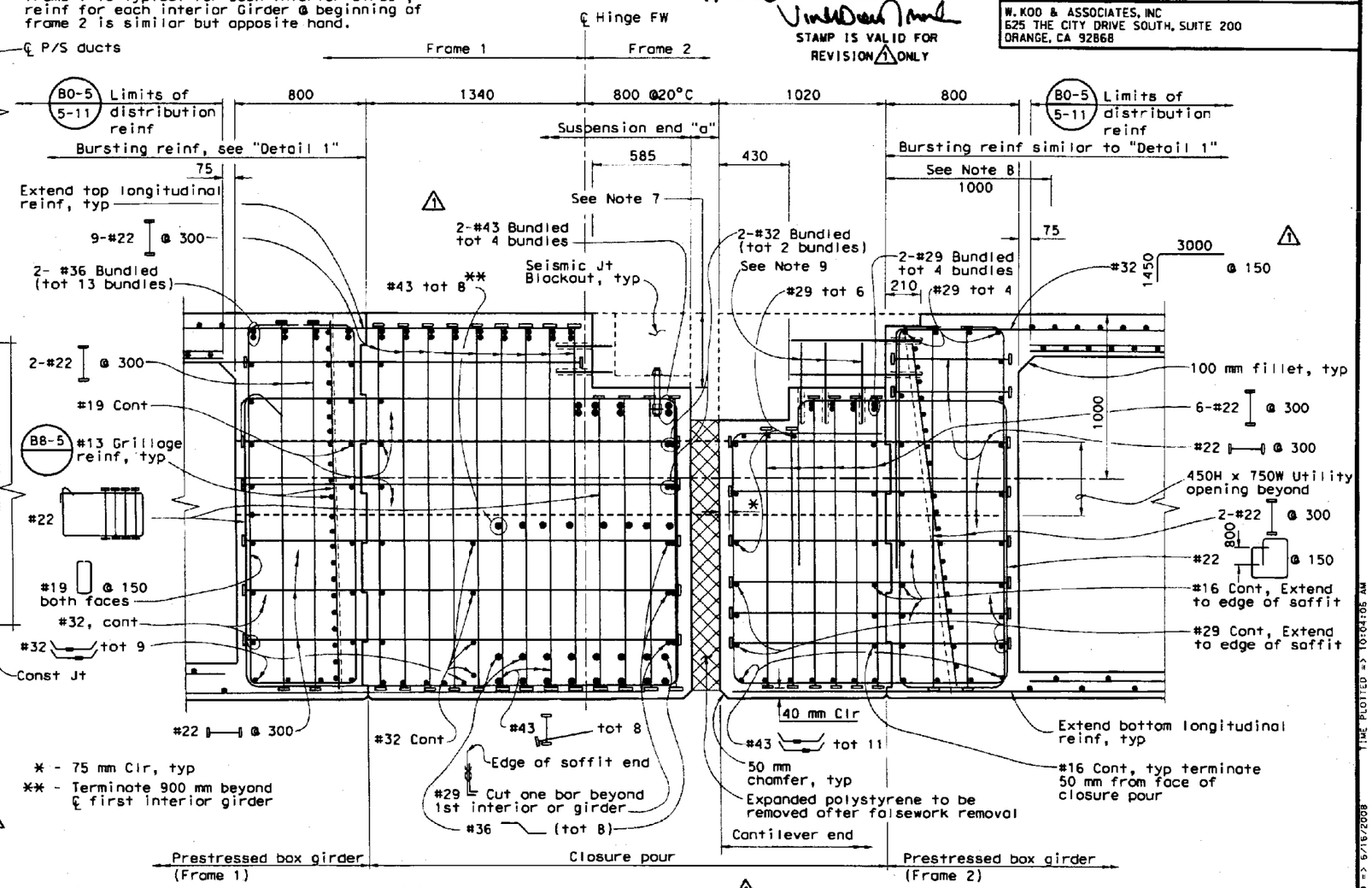

* - 75 mm Clr, typ

** - Terminate 900 mm beyond ℄ first interior girder

Notes:
1. Reinforcement may be moved or bundled in 2-bar bundles to clear utility openings and expansion Jt assembly. Bend reinf to clear seismic joint assembly as required.
2. Blockout size shall be determined by the Contractor and approved by the Engineer.
3. No lap splices allowed in main diaphragm reinforcement.
4. Closure pour, as indicated, shall be cast-in-place concrete and placed after contilever end of hinge is constructed and bearing assemblies are properly positioned. Concrete shall be same strength as cast-in-place prestressed concrete. Falsework shall remain in place until prestress in box girder structure has been completed.
5. See Bridge Details B0-13 13-1 and B0-13 13-2
6. For "a" dimension and blockout details, see "Deck Joint Details" sheet.
7. Blockout depth is assumed to be 450 mm max. Contractor shall submit the adjusted detail of reinf for approval, if the blockout depth is altered.
8. 1 75 mm Clr min shall be maintained for longitudinal reinf @ top layer of deck & diaphragm rebars & top end of vertical headed bars after deck ground off for simisic jt. Bend longitudinal reinf as required.
9. 1 For reinforcement and anchor bolts at deck joint blockouts, see "Seismic Joint" sheets.
10. See Note 10 on "Westbound Hinge FW Details No. 2" sheet.

SECTION F-F
1:15

1 Note:
For information not shown, see "Section E-E" on "Westbound Hinge FW Details No.2" sheet

ALL DIMENSIONS ARE IN MILLIMETERS UNLESS OTHERWISE SHOWN

DESIGN OVERSIGHT
SAM AKKAD FRANCISCO CARPIO BERNARD CHAN HASAN EL-HATUR
SIGN OFF DATE

	BY	CHECKED
DESIGN	X. Wu	A. Moubayed
DETAILS	G. Buelow	A. Moubayed
QUANTITIES	X. Wu	H. Haroun

PREPARED FOR THE STATE OF CALIFORNIA DEPARTMENT OF TRANSPORTATION

Adam Wang
PROJECT ENGINEER

CU 04
EA 0120L1

BRIDGE NO. 34-0006L/R
KILOMETER POST 1.6

SAN FRANCISCO OAKLAND BAY BRIDGE
EAST SPAN SEISMIC SAFETY PROJECT

OAKLAND APPROACH STRUCTURES-PHASE 1

WESTBOUND HINGE FW DETAILS NO.3

DISREGARD PRINTS BEARING EARLIER REVISION DATES

REVISION DATES (PRELIMINARY STAGE ONLY) 10/29/04 2/18/05 5/27/05 11/27/05 1/31/06 4/27/06 7/27/06 11/1/06 10/29/07 1/17/08

SHEET 150 OF 224

Rev. Date: 5-18-98

ORIGINAL SCALE IN MILLIMETERS FOR REDUCED PLANS 0 10 20 30 40 50 60 70 80 90 100

FILE => ...\04-012011-34-006-n-hingexfwdet1.dgn

USERNAME => #USER DATE PLOTTED => 6/16/2008 TIME PLOTTED => 10:04:06 AM

DIST	COUNTY	ROUTE	KILOMETER POST TOTAL PROJECT	SHEET NO.	TOTAL SHEETS
04	Ala	80	1.6/2.7	274R2	643

REGISTERED ENGINEER - CIVIL

PLANS APPROVAL DATE

The State of California or its officers or agents shall not be responsible for the accuracy or completeness of electronic copies of this plan sheet.

REGISTERED PROFESSIONAL ENGINEER A.L. ELY No. 18880 Exp. 6-30-09 CIVIL STATE OF CALIFORNIA

T.Y. LIN / MOFFATT & NICHOL
TWO HARRISON STREET, SUITE 500
SAN FRANCISCO, CA 94105

To get to the Caltrans web site, go to: http://www.dot.ca.gov

Note:

1. For barrier cover plate curtailment adjacent to bike path, see "Bike Path Expansion Joint Details" sheet.

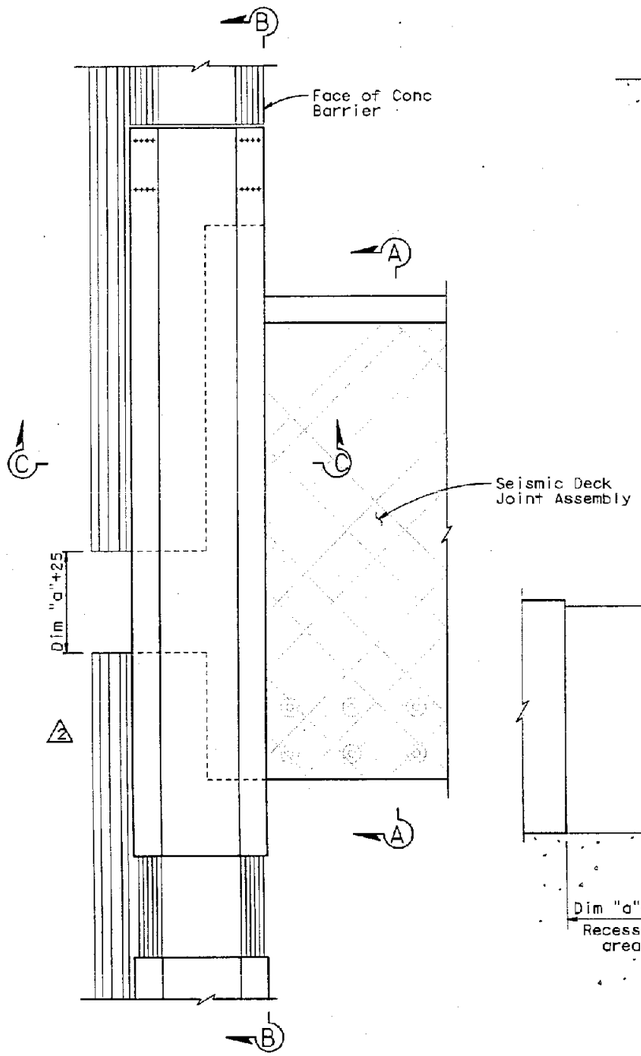

PARTIAL PLAN
No Scale

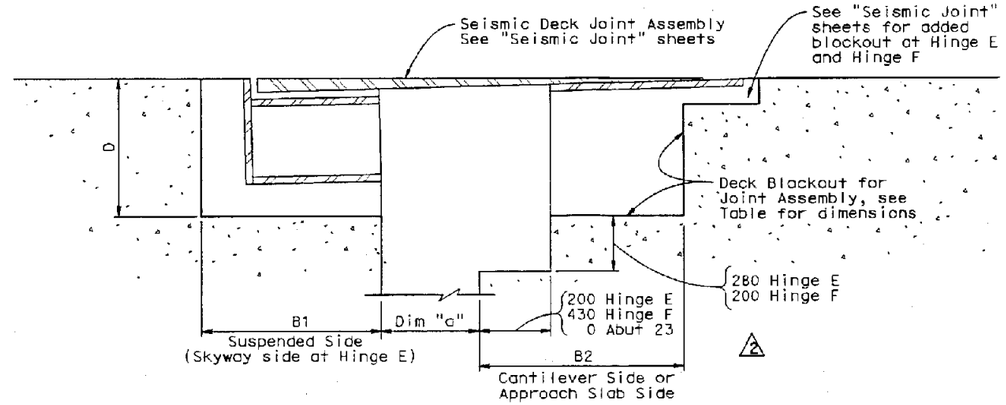

SECTION A-A
No Scale

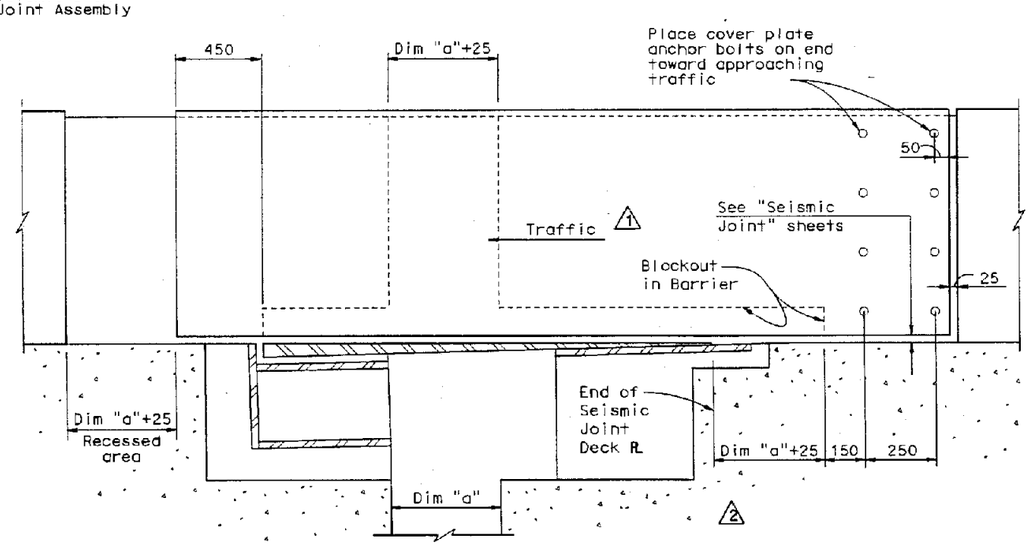

SECTION B-B
No Scale

(Westbound traffic only)
See "Deck Joint Details No. 2" 1 sheet for Eastbound traffic

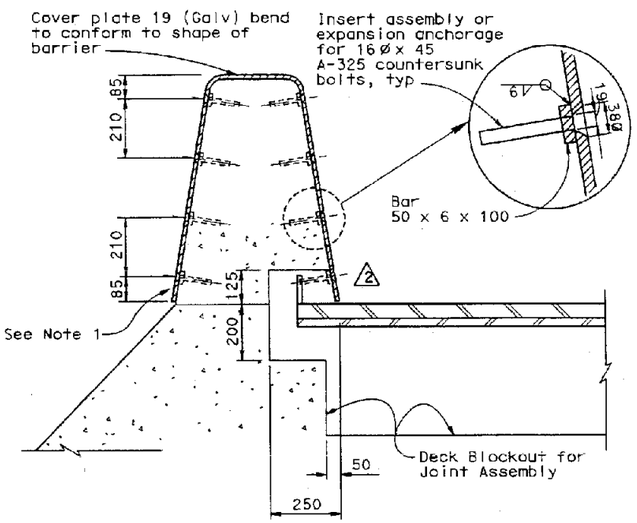

SECTION C-C
No Scale

Deck Joint Information							"a" Dimension *		
Location		Deck Blockout Dimensions (mm)			Movement Rating (MR)	Skew	Winter	Summer	Spring & Fall
		D	B1	B2					
Westbound	Hinge EW	490	855	850	900	0	416	384	400
	Hinge FW	450	585	1020	590	0	184	156	170
	Abut E23L	450	970	990	425	0	137	123	130
Eastbound	Hinge EE	490	855	850	900	0	416	384	400

* Under SEE Seismic conditions, the maximum "a" dimension is expected to be the same as the Movement Rating (MR).

REGISTERED PROFESSIONAL ENGINEER JAI BIRDY No. 41547 Exp. 12-31-09 CIVIL STATE OF CALIFORNIA

STAMP IS VALID FOR REV 1 AND 2 ONLY

ALL DIMENSIONS ARE IN MILLIMETERS UNLESS OTHERWISE SHOWN

MARK	DATE	DESCRIPTIONS	BY	CH'D
2	3/13/08	Revised to suit Seismic Jt Revs	FS	JNB
1	9/10/07	Made Section B-B for WB only	FS	JNB

REVISIONS

CONTRACT CHANGE ORDER NO. 9
SHEET 11 OF 13 04-012014
7/31/08

SAN FRANCISCO OAKLAND BAY BRIDGE
EAST SPAN SEISMIC SAFETY PROJECT

OAKLAND APPROACH STRUCTURES-PHASE 1

DECK JOINT DETAILS NO.1

DESIGN OVERSIGHT: SAM AKKAD, FRANCISCO CARRIO, BERNARD CHAN, MARAN EL-HAYEK

SIGN OFF DATE

Rev. Date: 5-21-98

	BY	CHECKED
DESIGN	Shangkuan	Atiqullah
DETAILS	van Ryn/Zucchi/Wai	Jain
QUANTITIES	Lido	E. Nichol

PREPARED FOR THE STATE OF CALIFORNIA DEPARTMENT OF TRANSPORTATION

Jai Birdy
PROJECT ENGINEER

BRIDGE NO. 34-0006 L/R
KILOMETER POST 1.6

CU 04
EA 0120L1

DISREGARD PRINTS BEARING EARLIER REVISION DATES

REVISION DATES (PRELIMINARY STAGE ONLY): 11/6/06 6/12/07 10/26/07 10/29/07 2/28/08 5/2/08 11/4/08 1/23/08 6/12/08 7/28/08

SHEET 161R2 OF 224

ORIGINAL SCALE IN MILLIMETERS FOR REDUCED PLANS 0 10 20 30 40 50 60 70 80 90 100

USERNAME => fsamson
DGN FILE => p:\4141 - OTD CS\Change Orders\3-13-08\04-012011-34-006-u-deckjoint_CC02.dgn

DATE PLOTTED => 6/16/2008
TIME PLOTTED => 9:36:17 AM

DIST.	COUNTY	ROUTE	KILOMETER POST TOTAL PROJECT	SHEET NO.	TOTAL SHEETS
04	Ala	80	1.6/2.7	274AS	643

REGISTERED ENGINEER - CIVIL

PLANS APPROVAL DATE

REGISTERED PROFESSIONAL ENGINEER A.L. ELY No. 18880 Exp. 6-30-09 CIVIL STATE OF CALIFORNIA

The State of California or its officers or agents shall not be responsible for the accuracy or completeness of electronic copies of this plan sheet.

T.Y. LIN / MOFFATT & NICHOL
TWO HARRISON STREET, SUITE 500
SAN FRANCISCO, CA 94105

To get to the Caltrans web site, go to: http://www.dot.ca.gov

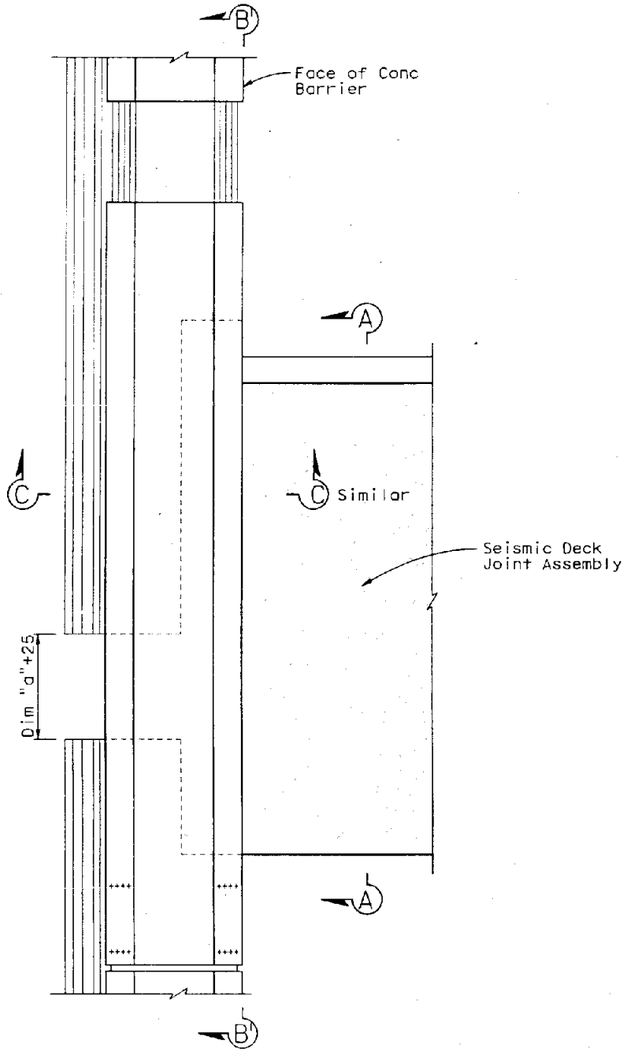

PARTIAL PLAN - HINGE EE (North Barrier Shown, South Barrier Similar)
No Scale

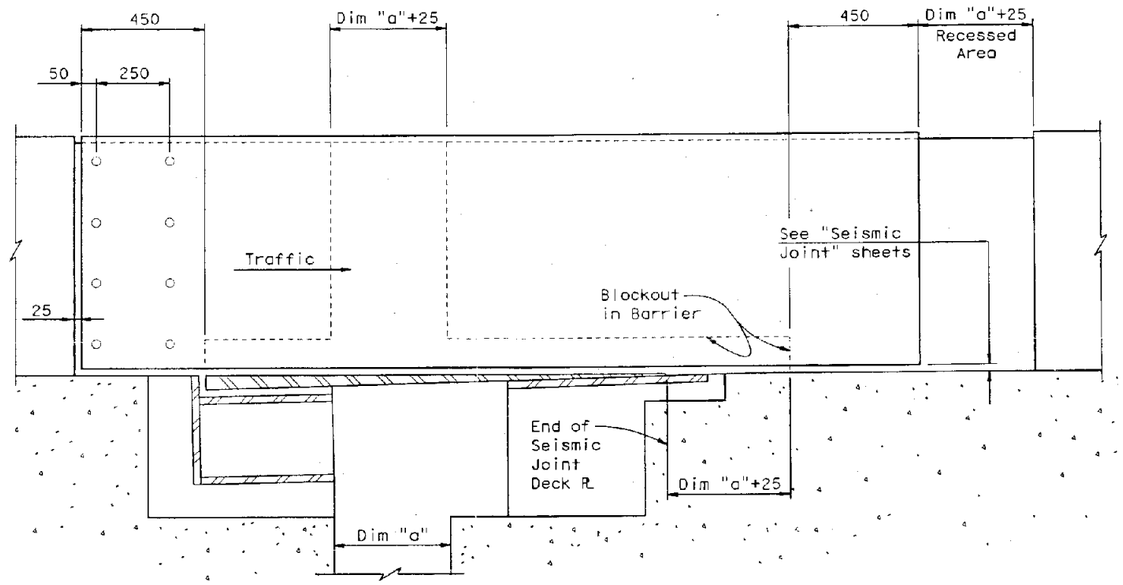

SECTION B'-B'
No Scale

(Eastbound traffic, Hinge EE, only)
See "Deck Joint Details No. 1" sheet for Westbound traffic

Note:

1. For Sections A-A and C-C, see "Deck Joint Details No. 1" sheet.

SUPPLEMENTAL SHEET

CONTRACT CHANGE ORDER NO. 9
SHEET 12 OF 13 04-012014 7/31/08

ALL DIMENSIONS ARE IN MILLIMETERS UNLESS OTHERWISE SHOWN

SAN FRANCISCO OAKLAND BAY BRIDGE
EAST SPAN SEISMIC SAFETY PROJECT

OAKLAND APPROACH STRUCTURES-PHASE 1

DECK JOINT DETAILS NO.2

DESIGN OVERSIGHT
SAM AKKAD FRANCISCO CARPIO BERNARD CHAN HASAN EL-NATUR
SIGN OFF DATE

	BY	CHECKED
DESIGN	Shangkuan	Atiquilah
DETAILS	van Ryn/Zucchi/Mai	Jain
QUANTITIES	Liao	E. Nichol

PREPARED FOR THE STATE OF CALIFORNIA DEPARTMENT OF TRANSPORTATION

Jai Birdy
PROJECT ENGINEER

BRIDGE NO. 34-0006 L/R
KILOMETER POST 1.6

Rev. Date: 5-18-98

ORIGINAL SCALE IN MILLIMETERS FOR REDUCED PLANS 0 10 20 30 40 50 60 70 80 90 100

CU 04
EA 0120L1

DISREGARD PRINTS BEARING EARLIER REVISION DATES

REVISION DATES (PRELIMINARY STAGE ONLY)

SHEET 161AS OF 224

DATE PLOTTED => 3/17/2009
TIME PLOTTED => 10:35:43 AM

USERNAME => cscanlon
DGN FILE => p1141 - OTD CS\Change Orders\12-13-08\04-012014_CCO2_Suppl.dgn

DIST	COUNTY	ROUTE	KILOMETER POST TOTAL PROJECT	SHEET NO.	TOTAL SHEETS
04	Ala	80	1.6/2.7	298R1	643

REGISTERED ENGINEER - CIVIL

1-29-07

PLANS APPROVAL DATE

The State of California or its officers or agents shall not be responsible for the accuracy or completeness of electronic copies of this plan sheet.

REGISTERED PROFESSIONAL ENGINEER MOHAN S. CHAR No. C057894 Exp. 6/30/08 CIVIL STATE OF CALIFORNIA

T.Y. LIN / MOFFAT & NICHOL
825 BATTERY STREET
SAN FRANCISCO, CA 94111

LIM & NASCIMENTO ENGINEERING CORPORATION
12 MAUCHLY, BLDG L
IRVINE, CA 92618

MARK	DATE	REVISION(S)	BY	CH'D
1	3/17/08	JOINT IMPROVEMENT. ADD DOWELS & DELETE JT REINF	MSC	TWD

DESCRIPTIONS

CONTRACT CHANGE ORDER NO. 9
SHEET 13 OF 13 04-0120L4
7/31/08

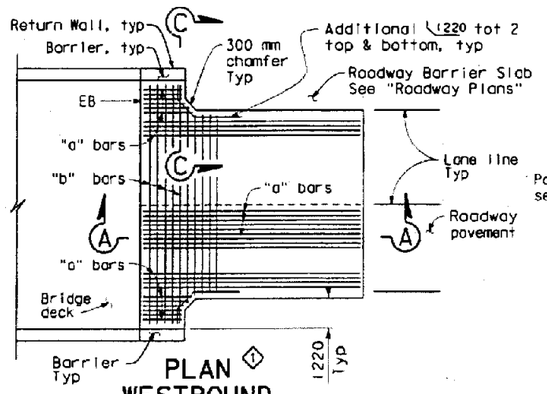

PLAN ① WESTBOUND
No Scale

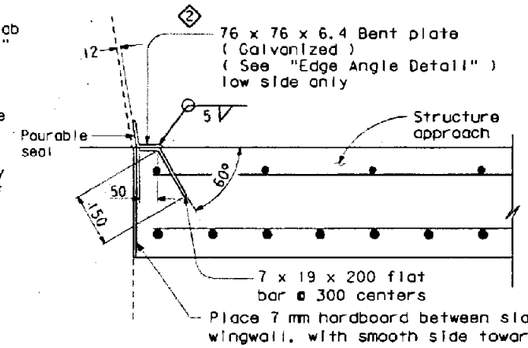

DETAIL B
No Scale

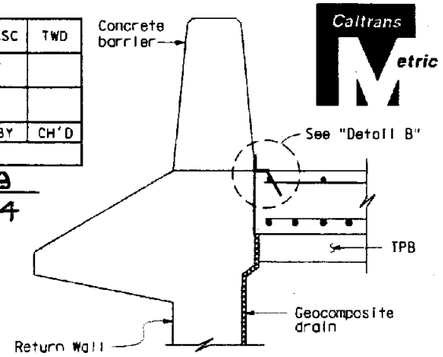

TYPE E-2
SECTION C-C
No Scale

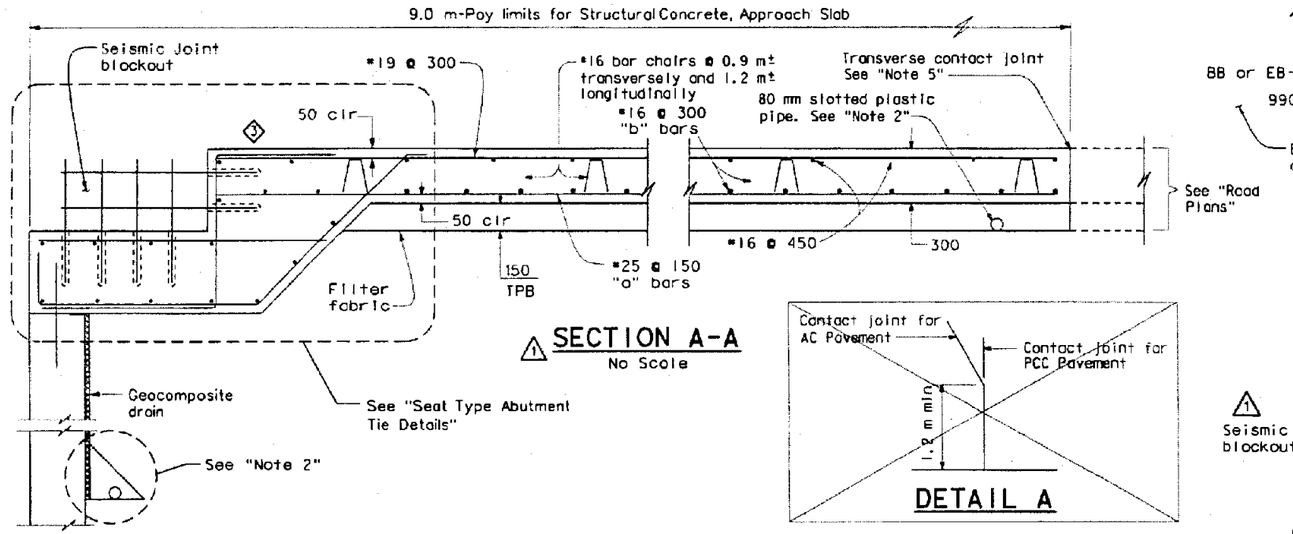

1 SECTION A-A
No Scale

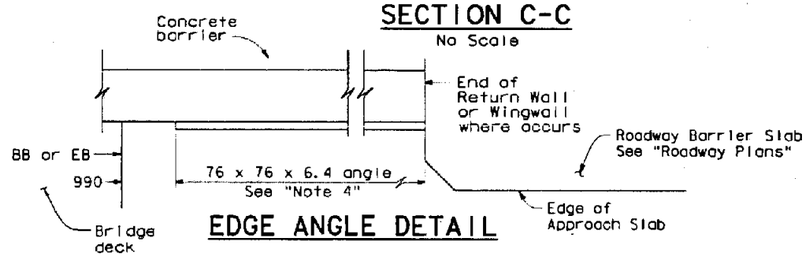

EDGE ANGLE DETAIL

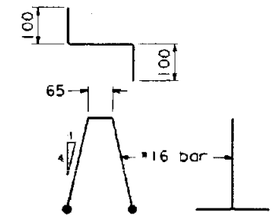

BAR CHAIR DETAIL

REGISTERED PROFESSIONAL ENGINEER MOHAN S. CHAR No. C057894 Exp. 6/30/10 CIVIL STATE OF CALIFORNIA

STAMP IS VALID FOR REVISION 1 ONLY

DETAIL A

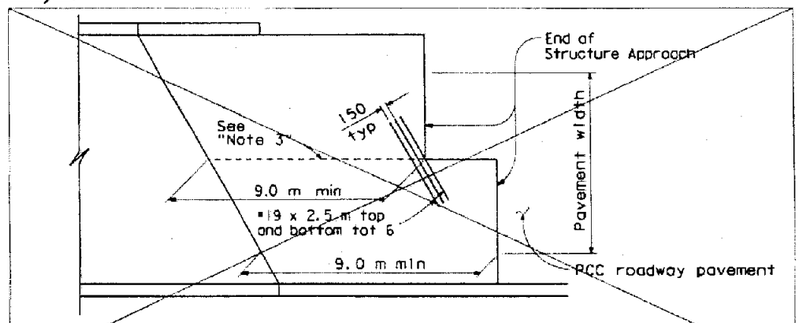

STRUCTURE APPROACH - END STAGGER DETAIL

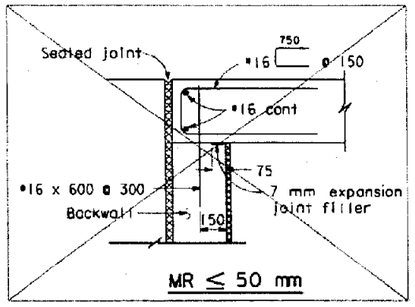

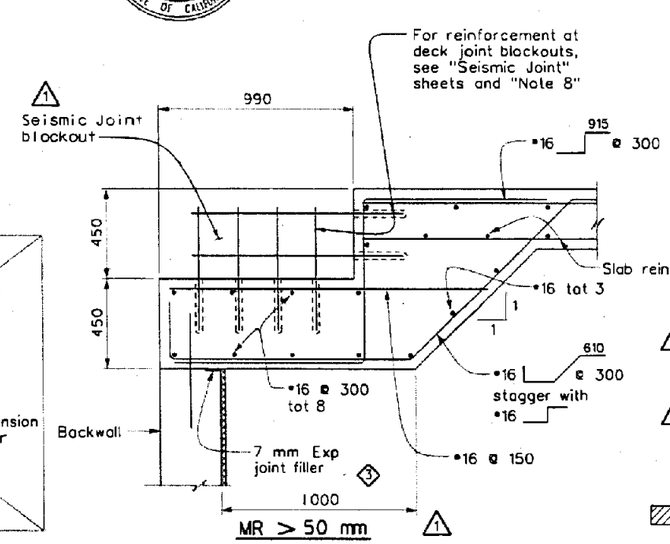

SEAT TYPE ABUTMENT TIE DETAILS (SEE "NOTE 1")
No Scale

ALL DIMENSIONS ARE IN MILLIMETERS UNLESS OTHERWISE SHOWN

NOTES:

1. For MR ≤ 50 mm, adjust bar reinforcement to clear a sawcut for sealed joint, when required.
2. For drainage details, see "Structure Approach Drainage Details" sheet.
3. Longitudinal construction joints, when permitted by the Engineer, shall be located on lane lines.
4. End angle at beginning of barrier transition, end of wingwall or end of structure approach, as applicable.
5. For transverse contact joint with new PCC paving, refer to Standard Plan A35-A.
6. At the contractor's option, approach slab transverse reinforcement may be placed parallel to paving notch. Spacing of transverse reinforcement is measured along ℄ roadway.
7. (1) Contractor shall prepare details for drill & (5) bond dowel and threaded rod locations for Engineer's approval.
8. (1) If using drill & bond dowels at seismic joint blockouts, Contractor shall provide a permanent means of identifying locations for installing dowels after concreting.

Remove all polystyrene.

NO SCALE

SAN FRANCISCO OAKLAND BAY BRIDGE
EAST SPAN SEISMIC SAFETY PROJECT

OAKLAND APPROACH STRUCTURES - PHASE I

STRUCTURE APPROACH TYPE N(9S)

STANDARD DRAWING

FILE NO. XS 22-18	DESIGN BY M. TRAFFALIS	CHECKED E. THORKILDSEN	APPROVAL RECOMMENDED BY
DRAWING DATE REVISED	DETAILS BY R. YEE	CHECKED E. THORKILDSEN	
	SUBMITTED BY M. HA		

1 Added Westbound Plan view
2 Detail B modified
3 Modified Detail
4 Removed Joint Table
5 Added Note

STATE OF CALIFORNIA
DEPARTMENT OF TRANSPORTATION

DIVISION OF STRUCTURES
STRUCTURE DESIGN

BRIDGE NO. 34-0006L/R
KILOMETER POST 1.6

CU 04
EA 0120L1

DISREGARD PRINTS BEARING EARLIER REVISION DATES

SHEET 185 OF 224

ORIGINAL SCALE IN MILLIMETERS FOR REDUCED PLANS 0 10 20 30 40 50 60 70 80 90 100

05 050 2147A (METRIC) (REV. 7/25/97)

STATE OF CALIFORNIA - DEPARTMENT OF TRANSPORTATION

CONTRACT CHANGE ORDER MEMORANDUM

DATE: 9/13/2007 Page 1 of 1

TO: AMER BATA / BEN GHAFGHAZI	FILE: E.A. 04 - 0120L4
FROM: BEN GHAFGHAZI	CO-RTE-PM ALA-80-1.6/2.7
	FED. NO. NO FED AID
CCO#: 9 SUPPLEMENT#: 0 Category Code: CHPT	CONTINGENCY BALANCE (incl. this change) $14,536,682.20
COST: ($570,000.00) INCREASE ☐ DECREASE ☑	HEADQUARTERS APPROVAL REQUIRED? ☑ YES ☐ NO
SUPPLEMENTAL FUNDS PROVIDED: $0.00	IS THIS REQUEST IN ACCORDANCE WITH ENVIRONMENTAL DOCUMENTS? ☑ YES ☐ NO
CCO DESCRIPTION: Modifications to Seismic Joints	**PROJECT DESCRIPTION:** Construct bridge, roadway, building and electrical system.

Original Contract Time:	Time Adj. This Change:	Previously Approved CCO Time Adjustments:	Percentage Time Adjusted: (including this change)	Total # of Unreconciled Deferred Time CCO(s): (including this change)
810 Day(s)	0 Day(s)	0 Day(s)	0 %	5

THIS CHANGE ORDER PROVIDES FOR:

Eliminating seismic joints at Hinge EW, Hinge EE, Hinge FW, and Abutment E23L and revising reinforcing to accommodate future seismic joint.

This change is necessary because the seismic joints have been redesigned to resolve constructability and design issues. The changes were to be added to this contract as a CCO, but due to rising steel costs it was deemed too costly. The seismic joints will be eliminated from this contract and included on the upcoming Oakland Touch Down 2 contract which should result in a lower cost due to competitive bidding. The seismic joints do not need to be installed until traffic is allowed on the bridge.

Contract Structure plan sheets 209, 232, 236, 237, 248, 252, 253, 262, 263, 274, and 298 of 643 shall be replaced with sheets 2 of 13 through 13 of 13 of this CCO. Contract Structure plan sheets 275 through 290 of 643 shall be deleted. Section 10-1.57, "Seismic Joint," of the Special Provisions shall be deleted.

This change will be credited by elimination of Items #122, Seismic Joint (HINGE EW); #123, Seismic Joint (HINGE EE); #124, Seismic Joint (HINGE FW); and #125, Seismic Joint (ABUTMENT E23L) for a net decrease of $570,000.00, which can be returned to the contingency fund. There shall be no additional cost for revising the reinforcing. A detailed cost analysis has been performed and is in the contract files.

This change has been discussed and concurred with Ade Akinsanya, Structures Design, Brian Maroney, Chief of Toll Bridge Design, Jon Tapping, Headquarters Construction, Mike Forner, Principal T.E., and Ken Terpstra, Project Manager. Maintenance concurrence is not necessary because the revised seismic joints will be installed on an upcoming contract. An Issue and Approved was granted by Ken Darby of Headquarters Construction on August 14, 2008

No adjustment of the contract time is warranted, as this change does not affect the controlling operation.

CONCURRED BY:			
Construction Engineer:	Ben Ghafghazi	Date	8/21/08
Bridge Engineer:	Mehran Ardakanian	Date	8/21/08
Project Engineer:	Ade Akinsanya, Structures Design	Date	7/28/08
Project Manager:	Ken Terprstra	Date	8/4/08
FHWA Rep.:		Date	
Environmental:		Date	
Other (specify):	Brian Maroney, Chief, Toll Design	Date	7/28/08
Other (specify):	Jon Tapping, Headquarters Constr	Date	8/4/08
District Prior Approval By:	Mike Forner, Principal TE	Date	8/1/08
HQ (Issue Approve) By:	Ken Darby	Date	8/14/08
Resident Engineer's Signature:		Date	8/21/08

ESTIMATE OF COST

	THIS REQUEST	TOTAL TO DATE
ITEMS	($570,000.00)	($570,000.00)
FORCE ACCOUNT	$0.00	$0.00
AGREED PRICE	$0.00	$0.00
ADJUSTMENT	$0.00	$0.00
TOTAL	($570,000.00)	($570,000.00)

FEDERAL PARTICIPATION

☐ PARTICIPATING ☐ PARTICIPATING IN PART ☑ NONE
☐ NON-PARTICIPATING (MAINTENANCE) ☐ NON-PARTICIPATING

FEDERAL SEGREGATION (if more than one Funding Source or P.I.P. type)
☑ CCO FUNDED PER CONTRACT ☐ CCO FUNDED AS FOLLOWS

FEDERAL FUNDING SOURCE	PERCENT

ADA Notice: For individuals with sensory disabilities, this document is available in alternate formats. For information call: (916) 654-6410 or TDD (916) 654-3880 or write Records and Forms Management, 1120 N Street, MS-89, Sacramento, CA 95814.

STATE OF CALIFORNIA - DEPARTMENT OF TRANSPORTATION

CONTRACT CHANGE ORDER MEMORANDUM

DATE: 4/7/2009 Page 1 of 1

TO: AMER BATA / BEN GHAFGHAZI	FILE: E.A. 04 - 0120L4
FROM: BEN GHAFGHAZI	CO-RTE-PM ALA-80-1.6/2.7
	FED. NO. NO FED AID
CCO#: 9 SUPPLEMENT#: 1 Category Code: CHPT	CONTINGENCY BALANCE (incl. this change) $8,550,291.20
COST: $20,000.00 INCREASE ☑ DECREASE ☐	HEADQUARTERS APPROVAL REQUIRED? ☑ YES ☐ NO
SUPPLEMENTAL FUNDS PROVIDED: $0.00	IS THIS REQUEST IN ACCORDANCE WITH ENVIRONMENTAL DOCUMENTS? ☑ YES ☐ NO
CCO DESCRIPTION: Install anchor rods at E23L.	**PROJECT DESCRIPTION:** Construct bridge, roadway, building and electrical system.

Original Contract Time:	Time Adj. This Change:	Previously Approved CCO Time Adjustments:	Percentage Time Adjusted: (including this change)	Total # of Unreconciled Deferred Time CCO(s): (including this change)
810 Day(s)	0 Day(s)	184 Day(s)	23 %	12

THIS CHANGE ORDER PROVIDES FOR:

Providing and installing 80, 31.75 mm diameter, 400mm long, Grade 55 threaded, galvanized, anchor rods at the bottom of the seismic joint blockout at Abutment E23L as shown on the detail on sheet 2 of 2 of the CCO.

This change is due to the elimination of the seismic joint at Abutment E23L under CCO No. 9. The joint will be installed on the upcoming Oakland Touch Down 2 contract. The new joint detail requires anchor rods to be embedded in the bridge concrete. The original seismic joint did not have anchor rods. Since the anchor rods need to be embedded in concrete it is necessary that they be installed on this contract.

This work will be paid as Extra Work at Force Account for $20,000.00, which can be financed from the contingency fund.

This change has been discussed and concurred with Tim Delis, Structures Design; Patrick Treacy, HQ Coordinator; Mike Forner, SFOBB Construction Manager; and Ken Terpstra, Project Manager. Maintenance concurrence is not necessary because the revised seismic joints will be installed on an upcoming contract. An Issue and Approved was granted by Bob Molera of Headquarters Construction on April 7, 2009.

No adjustment of the contract time is warranted, as this change does not affect the controlling operation.

CONCURRED BY:

Construction Engineer:	Ben Ghafghazi	Date	4/8/09
Bridge Engineer:	Mehran Ardakanian	Date	4/8/09
Project Engineer:	Tim Delis, Structures Design	Date	1/8/09
Project Manager:	Ken Terprstra	Date	4/3/09
FHWA Rep.:		Date	
Environmental:		Date	
Other (specify):	Patrick Treacy, HQ Const. Coord.	Date	3/23/09
Other (specify):		Date	
District Prior Approval By:	Mike Forner, Principal TE	Date	3/23/09
HQ (Issue Approve) By:	Bob Molera	Date	4/7/09
Resident Engineer's Signature:		Date	4/8/09

ESTIMATE OF COST

	THIS REQUEST	TOTAL TO DATE
ITEMS	$0.00	($570,000.00)
FORCE ACCOUNT	$20,000.00	$20,000.00
AGREED PRICE	$0.00	$0.00
ADJUSTMENT	$0.00	$0.00
TOTAL	$20,000.00	($550,000.00)

FEDERAL PARTICIPATION

☐ PARTICIPATING ☐ PARTICIPATING IN PART ☑ NONE
☐ NON-PARTICIPATING (MAINTENANCE) ☐ NON-PARTICIPATING

FEDERAL SEGREGATION (if more than one Funding Source or P.I.P. type)
☑ CCO FUNDED PER CONTRACT ☐ CCO FUNDED AS FOLLOWS

FEDERAL FUNDING SOURCE PERCENT

ADA Notice: For individuals with sensory disabilities, this document is available in alternate formats. For information call: (916) 654-6410 or TDD (916) 654-3880 or write Records and Forms Management, 1120 N Street, MS-89, Sacramento, CA 95814.

CONTRACT CHANGE ORDER

Change Requested by: Engineer

CCO 9	Suppl. No. 1	Contract No. 04 - 0120L4	Road ALA-80-1.6/2.7	FED. AID LOC.: NO FED AID

M C M CONSTRUCTION INC

You are directed to make the following changes from the plans and specifications or do the following described work not included in the plans and specifications for this contract. ***NOTE: This change order is not effective until approved by the Engineer.***

Description of work to be done, estimate of quantities and prices to be paid. (Segregate between additional work at contract price, agreed price and force account.) Unless otherwise stated, rates for rental of equipment cover only such time as equipment is actually used and no allowance will be made for idle time. This last percentage shown is the net accumulated increase or decrease from the original quantity in the Engineer's Estimate.

Extra Work at Force Account:

Provide and install 80, 31.75 mm diameter, 400mm long, Grade 55 threaded, galvanized, anchor rods at the bottom of the seismic joint blockout at Abutment E23L as shown on the detail on sheet 2 of 2 of this CCO.

Estimated cost of Extra Work at Force Account $20,000.00

Estimated Cost: Increase ☑ **Decrease** ☐ **$20,000.00**

By reason of this order the time of completion will be adjusted as follows: 0 days

Submitted by

Signature	Resident Engineer BEN GHAFGHAZI	Date 3/20/09

Approval Recommended by

Signature	Construction Manager Amer Bata	Date 3/20/09

Engineer Approval by

Signature	Construction Manager Amer Bata	Date 4/17/09

We the undersigned contractor, have given careful consideration to the change proposed and agree, if this proposal is approved, that we will provide all equipment, furnish the materials, except as may otherwise be noted above, and perform all services necessary for the work above specified, and will accept as full payment therefor the prices shown above.

NOTE: If you, the contractor, do not sign acceptance of this order, your attention is directed to the requirements of the specifications as to proceeding with the ordered work and filing a written protest within the time therein specified.

Contractor Acceptance by

Signature	(Print name and title) EDMUNDO A. IUCHI, TREASURER	Date 4/13/09

DIST	COUNTY	ROUTE	POSTMILE PREFIX / TOTAL PROJECT	SHEET No.	TOTAL SHEETS
04	Ala	80	1.6/2.1	289	843

REGISTERED CIVIL ENGINEER DATE

1-29-07
PLANS APPROVAL DATE

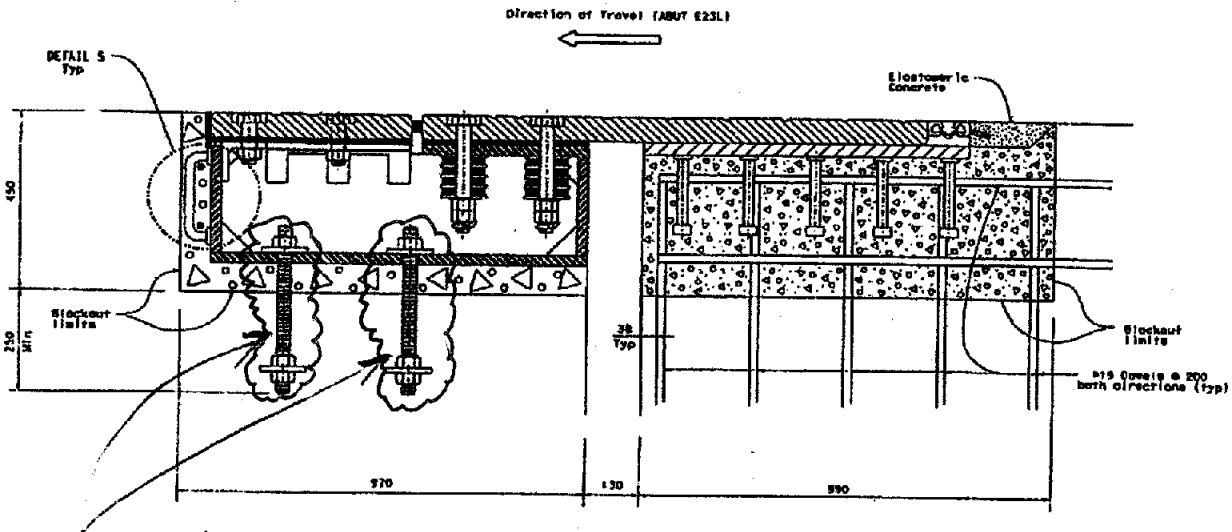

FRAME 2 SIDE

OAKLAND SIDE

WESTBOUND ELEVATION ⚠
SCALE 1:5

Anchor Rods typ
(31.75 mm Dia, 400 mm long,
Grade 55 threaded, Galvanized)

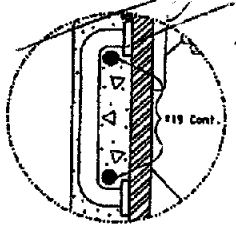

DETAIL 5

E. Delis
March 19, 2009

NOTES:

1. All dowels are drill and bond with minimum embedment length of 200 mm.
2. Top deck plate placed at deck profile.
3. Top of support plate parallel to top deck plate.
4. For Frame 2 limits see "GENERAL NOTES NO. 1" sheet.
5. Seismic joint shown position at 20°C.

MARK	DATE	REVISION(S) DESCRIPTIONS	DES	CHK	RCI
1	04/07	Joint improvements			
2					
3					
4					

REGISTERED CIVIL ENGINEER DATE

CONTRACT CHANGE ORDER NO. 9-1
SHEET 2 OF 2
3/19/09

THE CONTRACTOR SHALL VERIFY ALL CONTROLLING FIELD DIMENSIONS BEFORE ORDERING OR FABRICATING ANY MATERIAL.

ALL DIMENSIONS ARE IN MILLIMETERS UNLESS OTHERWISE SHOWN

DESIGN	E. DELIS	CHECKED	A. HARTSUN
DETAILS	A. P. BUSHEAR	CHECKED	A. HARTSUN
QUANTITIES	E. DELIS	CHECKED	A. HARTSUN

STATE OF CALIFORNIA
DEPARTMENT OF TRANSPORTATION

DIVISION OF ENGINEERING SERVICES
STRUCTURE DESIGN
SPECIAL DESIGNS BRANCH

CU 04
EA 0E791

SAN FRANCISCO OAKLAND BAY BRIDGE
EAST SPAN SEISMIC SAFETY PROJECT

OAKLAND APPROACH STRUCTURES-PHASE 1

SEISMIC JOINT (TYPE I)

REINFORCEMENT DETAILS

1:5

SHEET 177 OF 225

STATE OF CALIFORNIA - DEPARTMENT OF TRANSPORTATION

CONTRACT CHANGE ORDER MEMORANDUM

DATE: 5/15/2009 Page 1 of 1

TO: AMER BATA / BEN GHAFGHAZI	FILE: E.A. 04 - 0120L4
FROM: BEN GHAFGHAZI	CO-RTE-PM ALA-80-1.6/2.7
	FED. NO. NO FED AID
CCO#: 9 SUPPLEMENT#: 2 Category Code: CHPT	CONTINGENCY BALANCE (incl. this change) $7,392,538.20
COST: $30,000.00 INCREASE ☑ DECREASE ☐	HEADQUARTERS APPROVAL REQUIRED? ☑ YES ☐ NO
SUPPLEMENTAL FUNDS PROVIDED: $0.00	IS THIS REQUEST IN ACCORDANCE WITH ENVIRONMENTAL DOCUMENTS? ☑ YES ☐ NO
CCO DESCRIPTION: Temporary plate at seismic joint.	**PROJECT DESCRIPTION:** Construct bridge, roadway, building and electrical system.

Original Contract Time:	Time Adj. This Change:	Previously Approved CCO Time Adjustments:	Percentage Time Adjusted: (including this change)	Total # of Unreconciled Deferred Time CCO(s): (including this change)
810 Day(s)	0 Day(s)	184 Day(s)	23 %	10

THIS CHANGE ORDER PROVIDES FOR:

Constructing temporary roadway section at expansion joint for Hinges EW, FW and Abutment E23L per details shown on sheet 2 of 2 of the CCO.

This change is necessary to fill the void that has resulted by eliminating the seismic joints under CCO #9. The joints will be installed on the upcoming Oakland Touch Down 2 project, EA 0120M4. The temporary roadway section will be installed in order to accommodate construction traffic for other SFOBB contracts from the end of this contract until the joints are installed on contract 0120M4.

This work will be paid as Extra Work at Force Account for $30,000.00, which can be financed from the contingency fund.

This change has been discussed and concurred with Hasan El Natur, Structures Design; Jal Birdy, Moffat Nichol; Patrick Treacy, HQ Construction Coordinator; Mike Forner, SFOBB Construction Manager; and Ken Terpstra, Project Manager. Maintenance concurrence is not necessary because this work is temporary. An Issue and Approved was granted by Bob Molera of Headquarters Construction on May 20, 2009.

No adjustment of the contract time is warranted, as this change does not affect the controlling operation.

CONCURRED BY:

Construction Engineer:	Ben Ghafghazi	Date	5/20/09
Bridge Engineer:	Mehran Ardakanian	Date	05/22/09
Project Engineer:	Hasan El-Natur, Structures Design	Date	5/6/09
Project Manager:	Ken Terprstra	Date	5/19/09
FHWA Rep.:		Date	
Environmental:		Date	
Other (specify):	Jal Birdy, Moffat Nichol	Date	5/6/09
Other (specify):	Patrick Treacy, HQ Const. Coord.	Date	5/19/09
District Prior Approval By:	Mike Fomer, Principal TE	Date	5/19/09
HQ (Issue Approve) By:	Bob Molera	Date	5/20/09
Resident Engineer's Signature:		Date	5/20/09

ESTIMATE OF COST

	THIS REQUEST	TOTAL TO DATE
ITEMS	$0.00	($570,000.00)
FORCE ACCOUNT	$30,000.00	$50,000.00
AGREED PRICE	$0.00	$0.00
ADJUSTMENT	$0.00	$0.00
TOTAL	$30,000.00	($520,000.00)

FEDERAL PARTICIPATION

☐ PARTICIPATING ☐ PARTICIPATING IN PART ☑ NONE
☐ NON-PARTICIPATING (MAINTENANCE) ☐ NON-PARTICIPATING

FEDERAL SEGREGATION (if more than one Funding Source or P.I.P. type)
☑ CCO FUNDED PER CONTRACT ☑ CCO FUNDED AS FOLLOWS

FEDERAL FUNDING SOURCE	PERCENT

ADA Notice: For individuals with sensory disabilities, this document is available in alternate formats. For information call: (916) 654-6410 or TDD (916) 654-3880 or write Records and Forms Management, 1120 N Street, MS-89, Sacramento, CA 95814.

STATE OF CALIFORNIA - DEPARTMENT OF TRANSPORTATION

CONTRACT CHANGE ORDER

Change Requested by: Engineer

CCO 9	Suppl. No. 2	Contract No. 04 - 0120L4	Road ALA-80-1.6/2.7	FED. AID LOC.: NO FED AID

M C M CONSTRUCTION INC

You are directed to make the following changes from the plans and specifications or do the following described work not included in the plans and specifications for this contract. ***NOTE: This change order is not effective until approved by the Engineer.***

Description of work to be done, estimate of quantities and prices to be paid. (Segregate between additional work at contract price, agreed price and force account.) Unless otherwise stated, rates for rental of equipment cover only such time as equipment is actually used and no allowance will be made for idle time. This last percentage shown is the net accumulated increase or decrease from the original quantity in the Engineer's Estimate.

Extra Work at Force Account:

Provide labor, equipment, and materials as necessary to construct a temporary roadway section at expansion joint for Hinges EW, FW and Abutment E23L per details shown on sheet 2 of 2 of this CCO. Steel for road plate shall be ASTM grade A36.

Estimated cost of Extra Work at Force Account $30,000.00

Estimated Cost: Increase ☑ **Decrease** ☐ **$30,000.00**

By reason of this order the time of completion will be adjusted as follows: 0 days

Submitted by

Signature	Resident Engineer BEN GHAFGHAZI	Date 5/19/09

Approval Recommended by

Signature	Construction Manager Amer Bata	Date 5/20/09

Engineer Approval by

Signature	Construction Manager Amer Bata	Date 6/5/09

We the undersigned contractor, have given careful consideration to the change proposed and agree, if this proposal is approved, that we will provide all equipment, furnish the materials, except as may otherwise be noted above, and perform all services necessary for the work above specified, and will accept as full payment therefor the prices shown above.

NOTE: If you, the contractor, do not sign acceptance of this order, your attention is directed to the requirements of the specifications as to proceeding with the ordered work and filing a written protest within the time therein specified.

Contractor Acceptance by

Signature	(Print name and title) EDMUNDO A. PUCHI, TREASURER	Date 6/1/09

SFOBB - OAKLAND APPROACH STRUCTURES
TEMPORARY ROAD PLATE AT EXPANSION JOINTS
05/06/09

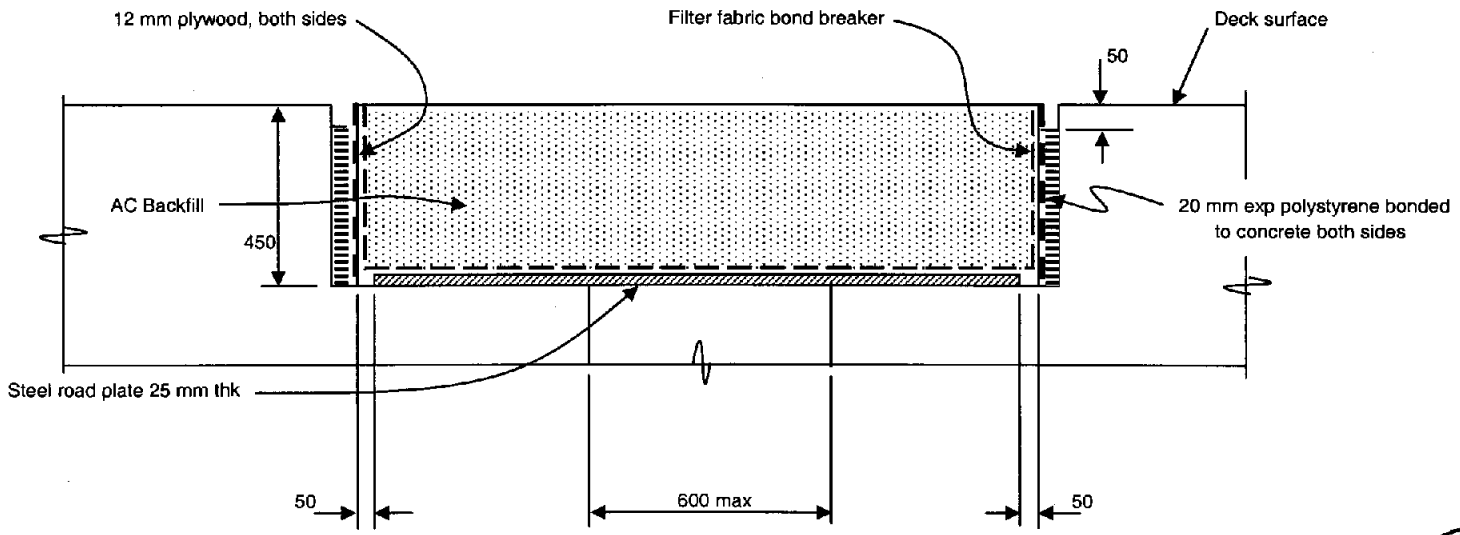

Contract No. 04-012OL4
Page 2 of 2
CCO No. 9 Suppl. No. 2
Contractor MCM
Res. Engr. B. Ghafghazi

SCHEMATIC SECTION AT EXPANSION JOINT
AT HINGES EW, FW & ABUT E23L
(No scale)

REGISTERED PROFESSIONAL ENGINEER
JAL BIRDY
No. C41547
EXP. 12/31/09
CIVIL
STATE OF CALIFORNIA

W:\4141\WAR1011-OAS Bidders Inquiries & Const Support\\Temporary Road Plate @ Exp Joints\Alt 4
5/6/2009 2:36 PM

STATE OF CALIFORNIA - DEPARTMENT OF TRANSPORTATION

CONTRACT CHANGE ORDER MEMORANDUM

DATE: 5/28/2010 Page 1 of 1

TO: AMER BATA / BEN GHAFGHAZI	FILE: E.A. 04 - 0120L4
FROM: BEN GHAFGHAZI	CO-RTE-PM ALA-80-1.6/2.7
	FED. NO. NO FED AID
CCO#: 9 SUPPLEMENT#: 3 Category Code: CHPT	CONTINGENCY BALANCE (incl. this change) $1,440,088.90
COST: $50,000.00 INCREASE ☑ DECREASE ☐	HEADQUARTERS APPROVAL REQUIRED? ☑ YES ☐ NO
SUPPLEMENTAL FUNDS PROVIDED: $0.00	IS THIS REQUEST IN ACCORDANCE WITH ENVIRONMENTAL DOCUMENTS? ☑ YES ☐ NO
CCO DESCRIPTION: Additional Funds	**PROJECT DESCRIPTION:** Construct bridge, roadway, building and electrical system.

Original Contract Time:	Time Adj. This Change:	Previously Approved CCO Time Adjustments:	Percentage Time Adjusted: (including this change)	Total # of Unreconciled Deferred Time CCO(s): (including this change)
810 Day(s)	0 Day(s)	184 Day(s)	23 %	0

THIS CHANGE ORDER PROVIDES FOR:

Additional funds for the work of Contract Change Order No. 9, Supplements 1 and 2. CCO No. 9, Supplement 1 was issued to provide and install anchor rods at the bottom of the seismic joint blockout at Abutment E23L, and Supplement 2 was issued to fill the joint with asphalt concrete for construction access.

The work of this change order has exceeded the original estimates of previous supplements: $20,000.00 from CCO No. 9, Supplement 1, and $30,000.00 from CCO No. 9, Supplement 2. Bills for this change order has totaled $80,743.61 to date, and a new supplement is required to cover payments for additional bills.

This work will be paid as Extra Work at Force Account for $50,000.00, which can be financed from the contingency fund.

This change has been discussed and concurred with Patrick Treacy, HQ Coordinator; Mike Forner, SFOBB Construction Manager. Maintenance concurrence is not necessary because the revised seismic joints will be installed on an upcoming contract. An Issue and Approve was granted by Larry Salhaney of Headquarters Construction on ##########. 6/3/2010

No adjustment of the contract time is warranted, as this change does not affect the controlling operation.

CONCURRED BY:

Construction Engineer:	Ben Ghafghazi	Date 6/1/2010
Bridge Engineer:	Mehran Ardakanian	Date
Project Engineer:		Date
Project Manager:		Date
FHWA Rep.:		Date
Environmental:		Date
Other (specify):		Date
Other (specify):		Date
District Prior Approval By:		Date
HQ (Issue Approve) By:		Date
Resident Engineer's Signature:		Date 6/1/2010

ESTIMATE OF COST

	THIS REQUEST	TOTAL TO DATE
ITEMS	$0.00	($570,000.00)
FORCE ACCOUNT	$50,000.00	$100,000.00
AGREED PRICE	$0.00	$0.00
ADJUSTMENT	$0.00	$0.00
TOTAL	$50,000.00	($470,000.00)

FEDERAL PARTICIPATION

☐ PARTICIPATING ☐ PARTICIPATING IN PART ☑ NONE
☐ NON-PARTICIPATING (MAINTENANCE) ☐ NON-PARTICIPATING

FEDERAL SEGREGATION (if more than one Funding Source or P.I.P. type)
☑ CCO FUNDED PER CONTRACT ☐ CCO FUNDED AS FOLLOWS

FEDERAL FUNDING SOURCE	PERCENT

ADA Notice: For individuals with sensory disabilities, this document is available in alternate formats. For information call: (916) 654-6410 or TDD (916) 654-3880 or write Records and Forms Management, 1120 N Street, MS-89, Sacramento, CA 95814.

STATE OF CALIFORNIA - DEPARTMENT OF TRANSPORTATION

CONTRACT CHANGE ORDER

Change Requested by: Engineer

CCO: 9	Suppl. No. 3	Contract No. 04 - 0120L4	Road ALA-80-1.6/2.7	FED. AID LOC.: NO FED AID

To: **M C M CONSTRUCTION INC**

You are directed to make the following changes from the plans and specifications or do the following described work not included in the plans and specifications for this contract. ***NOTE: This change order is not effective until approved by the Engineer.***

Description of work to be done, estimate of quantities and prices to be paid. (Segregate between additional work at contract price, agreed price and force account.) Unless otherwise stated, rates for rental of equipment cover only such time as equipment is actually used and no allowance will be made for idle time. This last percentage shown is the net accumulated increase or decrease from the original quantity in the Engineer's Estimate.

Extra Work at Force Account:

Provide additional funds to furnish and install anchor rods at the bottom of the seismic joint blockout at Abutment E23L as provided by CCO No. 9, Supplement 1. Provide additional funds also for constructing temporary asphalt concrete roadway sections at hinges EW, FW and Abutment E23L, as provided by CCO No. 9, Supplement 2.

Estimated cost of Extra Work at Force Account $50,000.00

Estimated Cost: Increase ☑ **Decrease** ☐ **$50,000.00**

By reason of this order the time of completion will be adjusted as follows: 0 days

Signature	**Resident Engineer** Ben Ghafghazi	**Date** 6/1/2010
Signature	**Construction Manager** Amer Bata	**Date** 6/1/10
Signature	**Construction Manager** Amer Bata	**Date** 6/1/10

We the undersigned contractor, have given careful consideration to the change proposed and agree, if this proposal is approved, that we will provide all equipment, furnish the materials, except as may otherwise be noted above, and perform all services necessary for the work above specified, and will accept as full payment therefor the prices shown above.

NOTE: If you, the contractor, do not sign acceptance of this order, your attention is directed to the requirements of the specifications as to proceeding with the ordered work and filing a written protest within the time therein specified.

Signature Not Required	**(Print name and title)**	**Date**

STATE OF CALIFORNIA - DEPARTMENT OF TRANSPORTATION

CONTRACT CHANGE ORDER MEMORANDUM

TO: AMER BATA / BEN GHAFGHAZI	FILE: E.A. 04 - 0120L4
FROM: BEN GHAFGHAZI	CO-RTE-PM ALA-80-1.6/2.7
	FED. NO. NO FED AID
CCO#: 9 SUPPLEMENT#: 4 Category Code: CHPT	CONTINGENCY BALANCE (incl. this change): $815,847.90
COST: $30,000.00 INCREASE ☑ DECREASE ☐	HEADQUARTERS APPROVAL REQUIRED? ☑ YES ☐ NO
SUPPLEMENTAL FUNDS PROVIDED: $0.00	IS THIS REQUEST IN ACCORDANCE WITH ENVIRONMENTAL DOCUMENTS? ☑ YES ☐ NO
CCO DESCRIPTION: Additional Funds for Expansion Joints	**PROJECT DESCRIPTION:** Construct bridge, roadway, building and electrical system.

Original Contract Time:	Time Adj. This Change:	Previously Approved CCO Time Adjustments:	Percentage Time Adjusted: (including this change)	Total # of Unreconciled Deferred Time CCO(s): (including this change)
810 Day(s)	0 Day(s)	0 Day(s)	0 %	0

THIS CHANGE ORDER PROVIDES FOR:
Additional funding for installing anchor rods and providing temporary access at expansion joint blockouts.

The original Change Order No. 9 eliminated the furnishing and installation of 4 seismic joints that were called for under the original contract plans due to design modifications requested by the Office of Structures Design. The modified joints will be installed under a subsequent contract. Change Order No. 9, Supplement No. 1 provided for the installation of anchor rods within the joint blockouts. Supplement No. 2 provided for access across these blockouts in order to mitigate access restrictions on this and adjacent contracts. Supplement No. 3 provided additional funding for providing this access.

The cost of the work has exceeded the previous estimate and it is now anticipated that additional funding of $30,000.00 will be required to fund the work. The work associated with protecting the exposed reinforcing steel and anchor rods prior to filling in the blockouts was more extensive than anticipated.

The work shall be compensated as extra work at force account at an estimated cost of $30,000 which shall be financed from the contract contingency funds. A cost analysis is on file. An Issue and Approved was granted by Larry Salhaney of Headquarters Construction on January 3, 2011.

No adjustment of contract time is warranted as the change will not affect the controlling operation.

Maintenance concurrence is not required as this change doesn't affect any permanent roadway features.

CONCURRED BY:

Construction Engineer:	Ben Ghafghazi	Date 1/3/2011
Bridge Engineer:		Date
Project Engineer:		Date
Project Manager:		Date
FHWA Rep.:		Date
Environmental:		Date
Other (specify):		Date
Other (specify):		Date
District Prior Approval By:		Date
HQ (Issue Approve) By:	Larry Salhaney	Date 1/3/11
Resident Engineer's Signature:		Date 1/3/2011

ESTIMATE OF COST

	THIS REQUEST	TOTAL TO DATE
ITEMS	$0.00	($570,000.00)
FORCE ACCOUNT	$30,000.00	$130,000.00
AGREED PRICE	$0.00	$0.00
ADJUSTMENT	$0.00	$0.00
TOTAL	$30,000.00	($440,000.00)

FEDERAL PARTICIPATION

☐ PARTICIPATING ☐ PARTICIPATING IN PART ☑ NONE
☐ NON-PARTICIPATING (MAINTENANCE) ☐ NON-PARTICIPATING

FEDERAL SEGREGATION (if more than one Funding Source or P.I.P. type)
☐ CCO FUNDED PER CONTRACT ☐ CCO FUNDED AS FOLLOWS

FEDERAL FUNDING SOURCE	PERCENT

ADA Notice: For individuals with sensory disabilities, this document is available in alternate formats. For information call: (916) 654-6410 or TDD (916) 654-3880 or write Records and Forms Management, 1120 N Street, MS-89, Sacramento, CA 95814.

STATE OF CALIFORNIA - DEPARTMENT OF TRANSPORTATION

CONTRACT CHANGE ORDER

Change Requested by: Engineer

CCO: 9	Suppl. No. 4	Contract No. 04 - 0120L4	Road ALA-80-1.6/2.7	FED. AID LOC.: NO FED AID

To: **M C M CONSTRUCTION INC**

You are directed to make the following changes from the plans and specifications or do the following described work not included in the plans and specifications for this contract. ***NOTE: This change order is not effective until approved by the Engineer.***

Description of work to be done, estimate of quantities and prices to be paid. (Segregate between additional work at contract price, agreed price and force account.) Unless otherwise stated, rates for rental of equipment cover only such time as equipment is actually used and no allowance will be made for idle time. This last percentage shown is the net accumulated increase or decrease from the original quantity in the Engineer's Estimate.

Extra Work at Force Account:

Provide additional funds for the work specified under the Change Order No. 9, Supplements No. 1 and No. 2.

Estimated cost of Extra Work at Force Account $30,000.00

Estimated Cost: Increase ☑ Decrease ☐ **$30,000.00**

By reason of this order the time of completion will be adjusted as follows: 0 days

Submitted by

Signature	Resident Engineer BEN GHAFGHAZI	Date 12/28/2010

Approval Recommended by

Signature	Construction Manager For Hazza El-Mahmoud Amer Bata	Date 12/29/10

Engineer Approval by

Signature	Construction Manager Amer Bata	Date 1/4/11

We the undersigned contractor, have given careful consideration to the change proposed and agree, if this proposal is approved, that we will provide all equipn furnish the materials, except as may otherwise be noted above, and perform all services necessary for the work above specified, and will accept as full paymer therefor the prices shown above.

NOTE: If you, the contractor, do not sign acceptance of this order, your attention is directed to the requirements of the specifications as to proceeding with the ordered work and filing a written protest within the time therein specified.

Contractor Acceptance by

Signature	(Print name and title)	Date

STATE OF CALIFORNIA - DEPARTMENT OF TRANSPORTATION

CONTRACT CHANGE ORDER

Change Requested by: Engineer

CCO 10	Suppl. No. 0	Contract No. 04 - 0120L4	Road ALA-80-1.6/2.7	FED. AID LOC.: NO FED AID

7 M C M CONSTRUCTION INC

You are directed to make the following changes from the plans and specifications or do the following described work not included in the plans and specifications for this contract. ***NOTE: This change order is not effective until approved by the Engineer.***

Description of work to be done, estimate of quantities and prices to be paid. (Segregate between additional work at contract price, agreed price and force account.) Unless otherwise stated, rates for rental of equipment cover only such time as equipment is actually used and no allowance will be made for idle time. This last percentage shown is the net accumulated increase or decrease from the original quantity in the Engineer's Estimate.

Extra Work at Lump Sum:

Provide three licenses of three dimensional integrated shop drawings (ISD) review software to be used for the duration of this contract. Two licenses shall be for the State's use and one for the Contractor's use.

The Contractor shall utilize the software to check for interference in three dimensions. Prior to acquiring the software, the Contractor shall submit to the Engineer the product name and application features of the software for review and approval. The software shall be compatible with the computer-aided drafting (CAD) software used to develop the ISD. Bar reinforcement shall be shown with deformed diameters. The Contractor shall develop CAD files using different layers for each type of embedded item.

Estimated cost of Extra Work at Lump Sum $39,600.00

Estimated Cost: Increase ☑ Decrease ☐ $39,600.00

By reason of this order the time of completion will be adjusted as follows: 0 days

Submitted by		
Signature	Resident Engineer BEN GHAFGHAZI	Date 12/18/07
Approval Recommended by		
Signature	Construction Engineer Ben Ghafghazi	Date 12/18/07
Engineer Approval by		
Signature	Construction Engineer Ben Ghafghazi	Date 1/10/08

We the undersigned contractor, have given careful consideration to the change proposed and agree, if this proposal is approved, that we will provide all equipment, furnish the materials, except as may otherwise be noted above, and perform all services necessary for the work above specified, and will accept as full payment therefor the prices shown above.

NOTE: If you, the contractor, do not sign acceptance of this order, your attention is directed to the requirements of the specifications as to proceeding with the ordered work and filing a written protest within the time therein specified.

Contractor Acceptance by		
Signature	(Print name and title) EDMUNDO A. PUCHI, TREASURER	Date 1/8/08

STATE OF CALIFORNIA - DEPARTMENT OF TRANSPORTATION

CONTRACT CHANGE ORDER MEMORANDUM

TO: AMER BATA / BEN GHAFGHAZI

FROM: BEN GHAFGHAZI

FILE: E.A. 04 - 0120L4
CO-RTE-PM ALA-80-1.6/2.7
FED. NO. NO FED AID

CCO#: 10 SUPPLEMENT#: 0 Category Code: CXTX

CONTINGENCY BALANCE (incl. this change) $18,325,341.54

COST: $39,600.00 INCREASE ☑ DECREASE ☐

HEADQUARTERS APPROVAL REQUIRED? ☐ YES ☑ NO

SUPPLEMENTAL FUNDS PROVIDED: $0.00

IS THIS REQUEST IN ACCORDANCE WITH ENVIRONMENTAL DOCUMENTS? ☑ YES ☐ NO

CCO DESCRIPTION:
Integrated Shop Drawings Software

PROJECT DESCRIPTION:
Construct bridge, roadway, building and electrical system.

Original Contract Time:	Time Adj. This Change:	Previously Approved CCO Time Adjustments:	Percentage Time Adjusted: (including this change)	Total # of Unreconciled Deferred Time CCO(s): (including this change)
810 Day(s)	0 Day(s)	0 Day(s)	0 %	0

THIS CHANGE ORDER PROVIDES FOR:
Integrated Shop Drawings Software. The Contractor is to provide three licenses of three dimensional integrated shop drawings (ISD) review software. Two copies will be for the State's use and one for the Contractor's use.

This change is necessary because the Special Provisions does not make any reference to software for ISD's. The software shall be commercially available software that checks for interference in three dimensions and identifies conflicts in the planned positions of embedded items. Prior to acquiring the software, the Contractor shall submit to the Engineer the product name and application features of the software for review and approval. The software shall be compatible with the computer-aided drafting (CAD) software used to develop the ISD. Bar reinforcement shall be shown with deformed diameters. The Contractor shall develop CAD files using different layers for each type of embedded item.

This work is not covered by any contract items therefore this change order will be paid as Extra Work at Agreed Lump Sum for an increase of $39,600.00, which can be financed from the contingency fund. A detailed cost analysis is on file.

Design and Maintenance concurrence is not necessary since this change is for administration purposes.

No adjustment of contract time is warranted by this change.

CONCURRED BY:

Construction Engineer:	Ben Ghafghazi	Date 12/18/07
Bridge Engineer:		Date
Project Engineer:		Date
Project Manager:		Date
FHWA Rep.:		Date
Environmental:		Date
Other (specify):		Date
Other (specify):		Date
District Prior Approval By:		Date
HQ (Issue Approve) By:		Date
Resident Engineer's Signature:		Date 12/18/07

ESTIMATE OF COST

	THIS REQUEST	TOTAL TO DATE
ITEMS	$0.00	$0.00
FORCE ACCOUNT	$0.00	$0.00
AGREED PRICE	$39,600.00	$39,600.00
ADJUSTMENT	$0.00	$0.00
TOTAL	$39,600.00	$39,600.00

FEDERAL PARTICIPATION

☐ PARTICIPATING ☐ PARTICIPATING IN PART ☑ NONE
☐ NON-PARTICIPATING (MAINTENANCE) ☐ NON-PARTICIPATING

FEDERAL SEGREGATION (if more than one Funding Source or P.I.P. type)
☑ CCO FUNDED PER CONTRACT ☐ CCO FUNDED AS FOLLOWS

FEDERAL FUNDING SOURCE	PERCENT

ADA Notice: For individuals with sensory disabilities, this document is available in alternate formats. For information call: (916) 654-6410 or TDD (916) 654-3880 or write Records and Forms Management, 1120 N Street, MS-89, Sacramento, CA 95814.

STATE OF CALIFORNIA - DEPARTMENT OF TRANSPORTATION

CONTRACT CHANGE ORDER

Change Requested by: Engineer

CCO 11	Suppl. No. 0	Contract No. 04 - 0120L4	Road ALA-80-1.6/2.7	FED. AID LOC.: NO FED AID

M C M CONSTRUCTION INC

You are directed to make the following changes from the plans and specifications or do the following described work not included in the plans and specifications for this contract. ***NOTE: This change order is not effective until approved by the Engineer.***

Description of work to be done, estimate of quantities and prices to be paid. (Segregate between additional work at contract price, agreed price and force account.) Unless otherwise stated, rates for rental of equipment cover only such time as equipment is actually used and no allowance will be made for idle time. This last percentage shown is the net accumulated increase or decrease from the original quantity in the Engineer's Estimate.

In accordance with Section 5-1.14, "Cost Reduction Incentive," of the Standard Specifications, modify Section 10-1.53, "Concrete Structures," subsection, "Mass Concrete," of the Special Provisions to require 50% fly ash and 50% cement by mass of the cementitious material for footing and pedestal concrete. Piers 20, 21, and 22 shall be included as mass concrete.

Extra Work at Lump Sum:

In accordance with Section 10-1.53, "Concrete Structures," subsection, "Mass Concrete," of the Special Provisions, perform a thermal analysis for piers 20, 21, and 22.

Estimated cost of Extra Work at Lump Sum $11,650.00

Adjustment of Compensation at Lump Sum:

In accordance with Section 4-1.03C, "Changes in Character of Work," of the Standard Specifications, the State will receive a credit of $58,668.47 for allowing 50% fly ash.

Adjustment of Compensation at Lump Sum (decrease) .....($58,668.47)

In accordance with Section 5-1.14, "Cost Reduction Incentive," of the Standard Specifications, the contractor agrees to accept the above decrease in contract payments and a lump sum payment of $29,334.23 as full compensation for this change.

Adjustment of Compensation at Lump Sum (increase) $29,334.23

Estimated Cost: Increase ☐ Decrease ☑ **($17,684.23)**

By reason of this order the time of completion will be adjusted as follows: 0 days

Submitted by

Signature	Resident Engineer BEN GHAFGHAZI	Date 3/11/08

Approval Recommended by

Signature	Construction Manager Amer Bata	Date 3/12/08

Engineer Approval by

Signature	Construction Manager Amer Bata Steven Whipple 6/2/08	Date 5/18/08

We the undersigned contractor, have given careful consideration to the change proposed and agree, if this proposal is approved, that we will provide all equipment, furnish the materials, except as may otherwise be noted above, and perform all services necessary for the work above specified, and will accept as full payment therefor the prices shown above.

NOTE: If you, the contractor, do not sign acceptance of this order, your attention is directed to the requirements of the specifications as to proceeding with the ordered work and filing a written protest within the time therein specified.

Contractor Acceptance by

Signature	(Print name and title) EDMUNDO A. PUCHI, TREASURER	Date 5/12/08

STATE OF CALIFORNIA - DEPARTMENT OF TRANSPORTATION

CONTRACT CHANGE ORDER MEMORANDUM

TO: AMER BATA / BEN GHAFGHAZI	FILE: E.A. 04 - 0120L4
FROM: BEN GHAFGHAZI	CO-RTE-PM ALA-80-1.6/2.7
	FED. NO. NO FED AID
CCO#: 11 SUPPLEMENT#: 0 Category Code: DHSA	CONTINGENCY BALANCE (incl. this change) $16,929,688.50
COST: ($17,684.23) INCREASE ☐ DECREASE ☑	HEADQUARTERS APPROVAL REQUIRED? ☑ YES ☐ NO
SUPPLEMENTAL FUNDS PROVIDED: $0.00	IS THIS REQUEST IN ACCORDANCE WITH ENVIRONMENTAL DOCUMENTS? ☑ YES ☐ NO
CCO DESCRIPTION: Mass Concrete Temperature Control	**PROJECT DESCRIPTION:** Construct bridge, roadway, building and electrical system.

Original Contract Time:	Time Adj. This Change:	Previously Approved CCO Time Adjustments:	Percentage Time Adjusted: (including this change)	Total # of Unreconciled Deferred Time CCO(s): (including this change)
810 Day(s)	0 Day(s)	0 Day(s)	0 %	1

THIS CHANGE ORDER PROVIDES FOR:

1) Classifying piers 20, 21, and 22 as mass concrete in accordance with Section 10-1.53, "Concrete Structures," subsection, "Mass Concrete," of the Special Provisions. Revise "Materials" section to require 50% fly ash and 50% cement by mass of the cementitious material for footing and pedestal concrete. Perform a thermal analysis for this mix design.

2) A cost reduction incentive in accordance with Section 5-1.14, "Cost Reduction Incentive," of the Standard Specifications for modifying Section 10-1.53, "Concrete Structures," subsection, "Mass Concrete," of the Special Provisions to revise "Materials" section as above for footing and pedestal concrete at piers 17, 18, and 19.

Piers 20, 21, and 22 were not originally classified as mass concrete. It was determined by Design that heat from curing may cause damage at these piers. A revised concrete mix with 50% fly ash and 50% cement was proposed to minimize the risk of damage. Since these piers were not originally included as mass concrete in the Special Provisions, additional thermal analyses are required. This mix also does not require the use of a cooling system.

The Contractor has proposed using the same mix design for piers 17, 18, and 19, which are classified as mass concrete in the Special Provisions. By revising the mix design the Contractor can eliminate the use of a cooling system.

Revising the specifications to allow a greater percentage flyash than allowed in the Special Provisions was discussed in initial meetings regarding the contractor's obligation to comply with the specifications for mass concrete, but were abandoned as the Department was unwilling to revise this specification. Shortly thereafter, it was discovered that the specifications for mass concrete needed revision as discussed bullet 1) above. As a result of investigating the costs and value of different mitigation methods needed to address the mass concrete impacts of the footings not included in the original contract, the Department re-examined the use of additional flyash and proposed a change to the specification. As this idea was discussed in meetings prior to the specification change and subsequently abandoned, it is inappropriate for the Department to take full credit for the concept and a CRIP is therefore appropriate for the elements included in the original contract.

The net savings for this change is $58,668.47. The decrease is due to elimination of the cooling system. One half of the cost savings is returned to the Contractor as and adjustment of compensation at agreed lump sum for a total of $29,334.00. Cost of thermal analysis for piers 20, 21, and 22 is $11,650.00 and will paid as extra work at agreed lump sum. Thermal analysis for piers 17, 18, and 19 is included in the Special Provisions and no additional compensation will be allowed. A detailed cost analysis is on file.

This change was concurred by Mike Whiteside, Specifications Manager for San Francisco--Oakland Bay Bridge, Ade Akinsanya, Structures Design, Ric Maggenti, Senior Materials and Research Engineer for Toll Bridge Program, Craig Hannenian, Chief, Office of Rigid Pavement Materials and Structural Concrete, Rob Kobal, Headquarters Construction Coordinator, Mike Forner, SFOBB Principal Construction Engineer, and Ken Terpstra, Project Manager. Authoity to Issue and Approve this CCO was obtained from Ken Darby of Headquarters Construction on April 8, 2008.

Maintenance concurrence is not required since this does not change any details of the footings or piers.

No adjustment of contract time is warranted by this change.

ADA Notice: For individuals with sensory disabilities, this document is available in alternate formats. For information call: (916) 654-6410 or TDD (916) 654-3880 or write Records and Forms Management, 1120 N Street, MS-89, Sacramento, CA 95814.

CONCURRED BY:			
Construction Engineer:	Ben Ghafghazi	Date	5/20/08
Bridge Engineer:	Rich Foley	Date	
Project Engineer:	Ade Akinsanya, Structures Design	Date	4/2/08
Project Manager:	Ken Terprstra	Date	4/6/08
FHWA Rep.:		Date	
Environmental:		Date	
Other (specify):	Mike Whiteside, Spec. Manager	Date	12/13/07
Other (specify):	Ric Maggenti, M&R Engineer	Date	4/4/08
District Prior Approval By:	Mike Forner, Principal TE	Date	3/19/08
HQ (Issue Approve) By:	Ken Darby	Date	4/8/08
Resident Engineer's Signature:		Date	5/20/08

ESTIMATE OF COST

	THIS REQUEST	TOTAL TO DATE
ITEMS	$0.00	$0.00
FORCE ACCOUNT	$0.00	$0.00
AGREED PRICE	$11,650.00	$11,650.00
ADJUSTMENT	($29,334.23)	($29,334.23)
TOTAL	($17,684.23)	($17,684.23)

FEDERAL PARTICIPATION

☐ PARTICIPATING ☐ PARTICIPATING IN PART ☑ NONE
☐ NON-PARTICIPATING (MAINTENANCE) ☐ NON-PARTICIPATING

FEDERAL SEGREGATION (if more than one Funding Source or P.I.P. type)
☑ CCO FUNDED PER CONTRACT ☐ CCO FUNDED AS FOLLOWS

FEDERAL FUNDING SOURCE	PERCENT

ADA Notice: For individuals with sensory disabilities, this document is available in alternate formats. For information call: (916) 654-6410 or TDD (916) 654-3880 or write Records and Forms Management, 1120 N Street, MS-89, Sacramento, CA 95814.

CONTRACT CHANGE ORDER

Change Requested by: Engineer

CCO 12	Suppl. No. 0	Contract No. 04 - 0120L4	Road ALA-80-1.6/2.7	FED. AID LOC.: NO FED AID

To: **M C M CONSTRUCTION INC**

You are directed to make the following changes from the plans and specifications or do the following described work not included in the plans and specifications for this contract. ***NOTE: This change order is not effective until approved by the Engineer.***

Description of work to be done, estimate of quantities and prices to be paid. (Segregate between additional work at contract price, agreed price and force account.) Unless otherwise stated, rates for rental of equipment cover only such time as equipment is actually used and no allowance will be made for idle time. This last percentage shown is the net accumulated increase or decrease from the original quantity in the Engineer's Estimate.

Eliminate Item #188, "Mobilization," and pay mobilization in accordance with Section 10-1.02,"Mobilization," of the Special Provisions.

Estimate of Decrease in Contract Item at Contract Price:

Item No. 188: MOBILIZATION

-1 LS (-100.00%) $17,111,444.00 /LS =$17,111,444.00 (-100.00%)

Eliminate Item #188, "Mobilization," for administrative purposes. In accordance with Section 4-1.03(B), "Eliminated Items, of the Standard Specifications, the adjustment due to the elimination for Item #188 is zero.

Estimated total cost for Decrease in Contract Item.....($17,111,444.00)

Adjustment of Compensation at Unit Price:

The Contractor will be paid the sum of $17,111,444.00 for Mobilization. This sum constitutes full compensation, including markups, for this change. Mobilization will be paid in accordance with Section 10-1.20, "Mobilization," of the Special Provisions.

Estimated cost of Adjustment of Compensation at Agreed Unit Price $17,111,444.00

Estimated Cost: **Increase** ☐ **Decrease** ☐ **$0.00**

By reason of this order the time of completion will be adjusted as follows: 0 days

Submitted by

Signature	Resident Engineer BEN GHAFGHAZI	Date 9/24/07

Approval Recommended by

Signature	Construction Engineer Amer Bata	Date 9/24/07

Engineer Approval by

Signature	Construction Manager Mike Forner	Date 9/24/07

We the undersigned contractor, have given careful consideration to the change proposed and agree, if this proposal is approved, that we will provide all equipment, furnish the materials, except as may otherwise be noted above, and perform all services necessary for the work above specified, and will accept as full payment therefor the prices shown above.

NOTE: If you, the contractor, do not sign acceptance of this order, your attention is directed to the requirements of the specifications as to proceeding with the ordered work and filing a written protest within the time therein specified.

Contractor Acceptance by

Signature	(Print name and title)	Date

STATE OF CALIFORNIA - DEPARTMENT OF TRANSPORTATION

CONTRACT CHANGE ORDER MEMORANDUM

DATE: 9/24/2007 Page 1 of 1

TO: AMER BATA / BEN GHAFGHAZI	FILE: E.A. 04 - 0120L4
FROM: BEN GHAFGHAZI	CO-RTE-PM ALA-80-1.6/2.7
	FED. NO. NO FED AID
CCO#: 12 SUPPLEMENT#: 0 Category Code: AXZZ	CONTINGENCY BALANCE (incl. this change) $18,312,141.54
COST: $0.00 INCREASE ☐ DECREASE ☐	HEADQUARTERS APPROVAL REQUIRED? ☑ YES ☐ NO
SUPPLEMENTAL FUNDS PROVIDED: $0.00	IS THIS REQUEST IN ACCORDANCE WITH ENVIRONMENTAL DOCUMENTS? ☑ YES ☐ NO
CCO DESCRIPTION: Revise Mobilization Payment	**PROJECT DESCRIPTION:** Construct bridge, roadway, building and electrical system.

Original Contract Time:	Time Adj. This Change:	Previously Approved CCO Time Adjustments:	Percentage Time Adjusted: (including this change)	Total # of Unreconciled Deferred Time CCO(s): (including this change)
650 Day(s)	0 Day(s)	0 Day(s)	0 %	0

THIS CHANGE ORDER PROVIDES FOR:

Allowing the Department to provide accurate monthly progress payments for mobilization per Special Provisions Section 10-1.20,"Mobilization." Due to the revised mobilization payment schedule based on monthly progress payment number rather than percent complete the Department's automated payment system is unable to accurately process monthly pay estimates.

To correct this issue and provide payment to the contractor as required in the contract, Contract Item #188, "Mobilization ," will be eliminated. This will nullify the programmed payment schedule contained in the automatic payment system. Payments for mobilization will be made as an Adjustment of Compensation at ~~Unit Price~~ Lump Sum for a total of $17,111,444.00 based on the schedule in Section 10-1.20 of the Special Provisions.

This CCO was discussed and concurred with Rob Kobal, Headquarters Construction Coordinator, on September 24, 2007.

Design and Maintenance concurrence is not needed since this CCO is for administrative purposed only.

This CCO is being processed unilaterally to avoid delay in payment to the Contractor for this work. The Resident Engineer recommends this change order be approved.

CONCURRED BY:		
Construction Engineer:	Ben Ghafghazi	Date 9/24/07
Bridge Engineer:		Date
Project Engineer:		Date
Project Manager:		Date
FHWA Rep.:		Date
Environmental:		Date
Other (specify):	Rob Kobal, HQ Constrcution Coord	Date 9/24/07
Other (specify):		Date
District Prior Approval By:		Date
HQ (Issue Approve) By:	Ken Dorby	Date
Resident Engineer's Signature:		Date 9/25/07

9/24/07

ESTIMATE OF COST

	THIS REQUEST	TOTAL TO DATE
ITEMS	($17,111,444.00)	($17,111,444.00)
FORCE ACCOUNT	$0.00	$0.00
AGREED PRICE	$0.00	$0.00
ADJUSTMENT	$17,111,444.00	$17,111,444.00
TOTAL	$0.00	$0.00

FEDERAL PARTICIPATION

☐ PARTICIPATING ☐ PARTICIPATING IN PART ☑ NONE
☐ NON-PARTICIPATING (MAINTENANCE) ☐ NON-PARTICIPATING

FEDERAL SEGREGATION (if more than one Funding Source or P.I.P. type)
☑ CCO FUNDED PER CONTRACT ☐ CCO FUNDED AS FOLLOWS

FEDERAL FUNDING SOURCE	PERCENT

STATE OF CALIFORNIA - DEPARTMENT OF TRANSPORTATION

CONTRACT CHANGE ORDER MEMORANDUM

DATE: 9/8/2008 Page 1 of 1

TO: AMER BATA / BEN GHAFGHAZI	FILE: E.A. 04 - 0120L4
FROM: BEN GHAFGHAZI	CO-RTE-PM ALA-80-1.6/2.7
	FED. NO. NO FED AID
CCO#: 12 SUPPLEMENT#: 1 Category Code: AXZZ	CONTINGENCY BALANCE (incl. this change) $13,527,505.20
COST: $0.00 INCREASE ☐ DECREASE ☐	HEADQUARTERS APPROVAL REQUIRED? ☑ YES ☐ NO
SUPPLEMENTAL FUNDS PROVIDED: $0.00	IS THIS REQUEST IN ACCORDANCE WITH ENVIRONMENTAL DOCUMENTS? ☑ YES ☐ NO
CCO DESCRIPTION: Revise Mobilization Payment	**PROJECT DESCRIPTION:** Construct bridge, roadway, building and electrical system.

Original Contract Time:	Time Adj. This Change:	Previously Approved CCO Time Adjustments:	Percentage Time Adjusted: (including this change)	Total # of Unreconciled Deferred Time CCO(s): (including this change)
810 Day(s)	0 Day(s)	0 Day(s)	0 %	6

THIS CHANGE ORDER PROVIDES FOR:

Reinstating Contract Item #188, "Mobilization." Paying mobilization under the contract item and deleting the unit price payments of CCO #12.

Special Provisions Section 10-1.20, "Mobilization," requires payments for mobilization at different intervals and percentages than those of the Standard Specifications. CAS cannot accommodate the mobilization payments in accordance with the Special Provisions. CCO #12 was issued to address this by deleting Item #188 and adding an adjustment of compensation at unit price to make payments per the Special Provisions.

This change is necessary because the CCO created an issue in payment. Payment for mobilization at item price is not subject to retention. Mobilization payments made by change order are subject to retention. To compensate the contractor for the money that is retained by the system in each progress pay estimate an equivalent sum is being paid as Materials on Hand (MOH). Since the contract is more that 50% complete the mobilization is to be paid in full. This CCO will allow the mobilization item to be paid and the CCO payments that were subject to retention to be deleted. This will eliminate the need to make MOH payments on every progress pay estimate.

This CCO will be credited as an Adjustment of Compensation at Unit Price for a decrease of $17,111,444.00 and an increase of Contract Item #188, "Mobilization ," for an increase of $17,111,444.00.

This CCO has been discussed and concurred by Mike Forner, Principal TE, SFOBB; Patrick Treacy, Headquarters Construction Reviewer; and Ken Terpstra, Project Manager. Design and Maintenance concurrence are not needed since this CCO is for administrative purposes only. Issue and approve was granted by Headquarters on September 15, 2008.

No adjustment of contract time is warranted by this change.

CONCURRED BY:

Construction Engineer:	Ben Ghafghazi	Date	9/15/08
Bridge Engineer:		Date	
Project Engineer:		Date	
Project Manager:	Ken Terprstra	Date	9/10/08
FHWA Rep.:		Date	
Environmental:		Date	
Other (specify):	Patrick Treacy, HQ Const. Coord.	Date	9/10/08
Other (specify):		Date	
District Prior Approval By:	Mike Forner, Principal TE	Date	9/10/08
HQ (Issue Approve) By:	Ken Darby	Date	9/15/08
Resident Engineer's Signature:		Date	9/15/08

ESTIMATE OF COST

	THIS REQUEST	TOTAL TO DATE
ITEMS	$17,111,444.00	$0.00
FORCE ACCOUNT	$0.00	$0.00
AGREED PRICE	$0.00	$0.00
ADJUSTMENT	($17,111,444.00)	$0.00
TOTAL	$0.00	$0.00

FEDERAL PARTICIPATION

☐ PARTICIPATING ☐ PARTICIPATING IN PART ☑ NONE
☐ NON-PARTICIPATING (MAINTENANCE) ☐ NON-PARTICIPATING

FEDERAL SEGREGATION (if more than one Funding Source or P.I.P. type)
☑ CCO FUNDED PER CONTRACT ☐ CCO FUNDED AS FOLLOWS

FEDERAL FUNDING SOURCE	PERCENT

ADA Notice: For individuals with sensory disabilities, this document is available in alternate formats. For information call: (916) 654-6410 or TDD (916) 654-3880 or write Records and Forms Management, 1120 N Street, MS-89, Sacramento, CA 95814.

STATE OF CALIFORNIA - DEPARTMENT OF TRANSPORTATION

CONTRACT CHANGE ORDER

Change Requested by: Engineer

CCO 12	Suppl. No. 1	Contract No. 04 - 0120L4	Road ALA-80-1.6/2.7	FED. AID LOC.: NO FED AID

TO: **M C M CONSTRUCTION INC**

You are directed to make the following changes from the plans and specifications or do the following described work not included in the plans and specifications for this contract. ***NOTE: This change order is not effective until approved by the Engineer.***

Description of work to be done, estimate of quantities and prices to be paid. (Segregate between additional work at contract price, agreed price and force account.) Unless otherwise stated, rates for rental of equipment cover only such time as equipment is actually used and no allowance will be made for idle time. This last percentage shown is the net accumulated increase or decrease from the original quantity in the Engineer's Estimate.

Delete unit price payment made for mobilization on CCO #12 and reinstate Item #188, "Mobilization." Pay mobilization under Item #188.

Estimate of Increase in Contract Item at Contract Price:

Item No. 188: MOBILIZATION
1 LS (+100.00%) $17,111,444.00 /LS = $17,111,444.00 (+0.00%)

Renistate Item #188, "Mobilization." Pay mobilization under this item.

Total cost for Increase in Contract Item.....$17,111,444.00

Adjustment of Compensation at Unit Price:

Delete Adjustment of Compensation mobilization payment made under CCO #12. For this work the contractor will credit the State $17,111,444.00. This price constitutes full compensation, including all markups, for the work of this change.

Adjustment of Compensation at Agreed Unit Price .....($17,111,444.00)

Estimated Cost: Increase ☐ Decrease ☐ **$0.00**

By reason of this order the time of completion will be adjusted as follows: 0 days

Submitted by		
Signature	Resident Engineer BEN GHAFGHAZI	Date 9/9/08
Approval Recommended by		
Signature	Construction Manager Amer Bata	Date 9/11/08
Engineer Approval by		
Signature	Principal TE Mike Forner	Date 9-29-08

We the undersigned contractor, have given careful consideration to the change proposed and agree, if this proposal is approved, that we will provide all equipment, furnish the materials, except as may otherwise be noted above, and perform all services necessary for the work above specified, and will accept as full payment therefor the prices shown above.

NOTE: If you, the contractor, do not sign acceptance of this order, your attention is directed to the requirements of the specifications as to proceeding with the ordered work and filing a written protest within the time therein specified.

Contractor Acceptance by		
Signature	(Print name and title) EDMUNDO A. PUCHI, TREASURER	Date 9/22/08

STATE OF CALIFORNIA - DEPARTMENT OF TRANSPORTATION

CONTRACT CHANGE ORDER

Change Requested by: Engineer

CCO 13 **Suppl. No.** 0 **Contract No.** 04 - 0120L4 **Road** ALA-80-1.6/2.7 **FED. AID LOC.:** NO FED AID

To: **M C M CONSTRUCTION INC**

You are directed to make the following changes from the plans and specifications or do the following described work not included in the plans and specifications for this contract. ***NOTE: This change order is not effective until approved by the Engineer.***

Description of work to be done, estimate of quantities and prices to be paid. (Segregate between additional work at contract price, agreed price and force account.) Unless otherwise stated, rates for rental of equipment cover only such time as equipment is actually used and no allowance will be made for idle time. This last percentage shown is the net accumulated increase or decrease from the original quantity in the Engineer's Estimate.

Fabricate Barrier Rail Expansion Joint Cover Plate per details shown on sheets 2 of 3, and 3 of 3 of this CCO. These sheets, ~~247~~ 274R1 and 274S, shall replace sheet 274 of 643 of the Contract Plans.

There will be no cost or credit due to this change.

Estimated Cost: Increase ☐ Decrease ☐ **$0.00**

By reason of this order the time of completion will be adjusted as follows: 0 days

Submitted by

Signature	Resident Engineer	Date
	BEN GHAFGHAZI	10/15/07

Approval Recommended by

Signature	Construction Engineer	Date
	Ben Ghafghazi	10/15/07

Engineer Approval by

Signature	Construction Engineer	Date
	Ben Ghafghazi	10/31/07

We the undersigned contractor have given careful consideration to the change proposed and agree, if this proposal is approved, that we will provide all equipment, furnish the materials, except as may otherwise be noted above, and perform all services necessary for the work above specified, and will accept as full payment therefor the prices shown above.

NOTE: If you, the contractor, do not sign acceptance of this order, your attention is directed to the requirements of the specifications as to proceeding with the ordered work and filing a written protest within the time therein specified.

Contractor Acceptance by

Signature	(Print name and title)	Date
	EDMUNDO A. PUCHI, TREASURER	10/25/07

DIST.	COUNTY	ROUTE	KILOMETER POST TOTAL PROJECT	SHEET NO.	TOTAL SHEETS
04	Ala	80	1.6/2.7	274R1	643

REGISTERED ENGINEER - CIVIL

1-29-07

PLANS APPROVAL DATE

REGISTERED PROFESSIONAL ENGINEER A.L. ELY No. 18880 Exp. 6-30-07 CIVIL STATE OF CALIFORNIA

The State of California or its officers or agents shall not be responsible for the accuracy or completeness of electronic copies of this plan sheet.

T.Y. LIN / MOFFATT & NICHOL
TWO HARRISON STREET, SUITE 500
SAN FRANCISCO, CA 94105

To get to the Caltrans web site, go to: http://www.dot.ca.gov

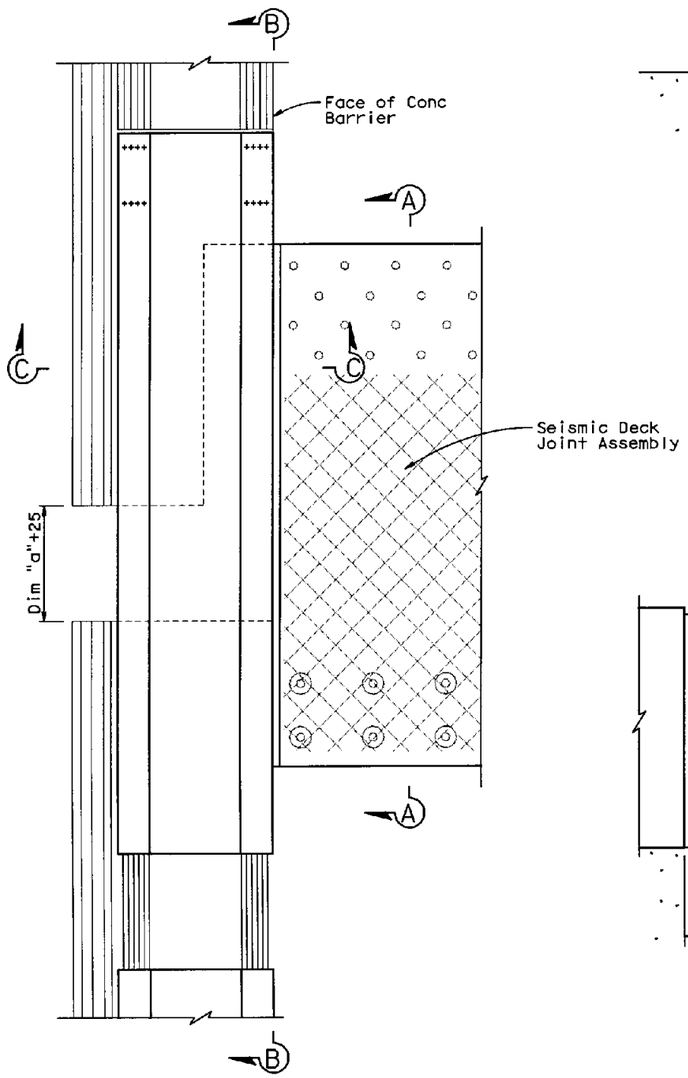

PARTIAL PLAN
No Scale

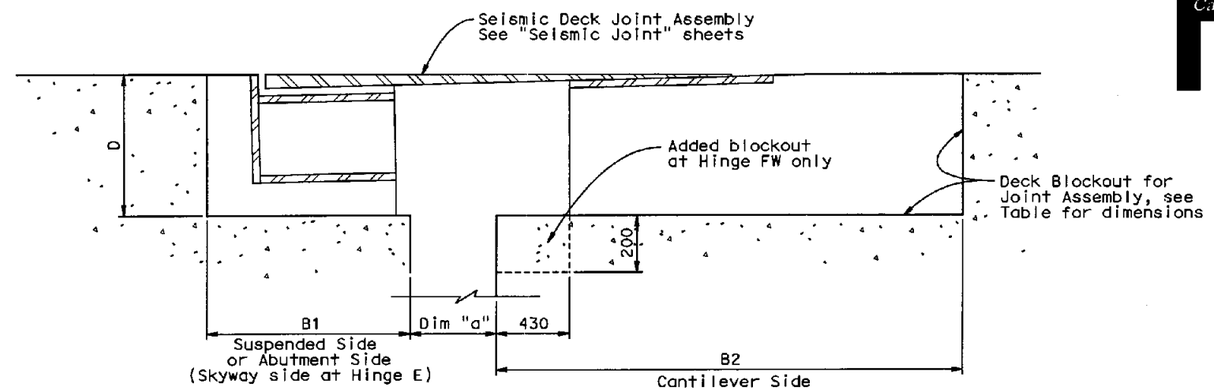

SECTION A-A
No Scale

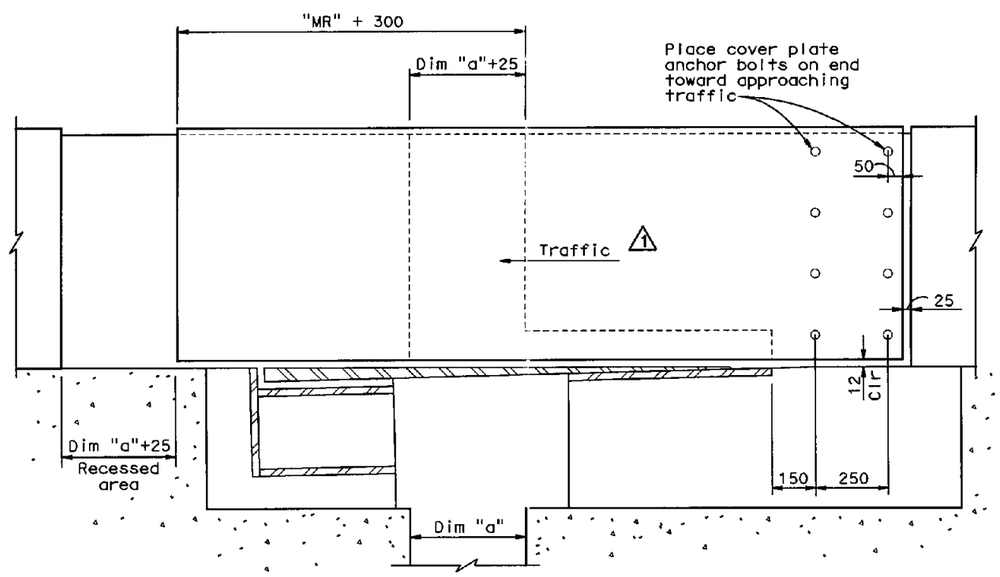

SECTION B-B
No Scale

(Westbound traffic only)
See "Deck Joint Details No. 2" 1 sheet for Eastbound traffic

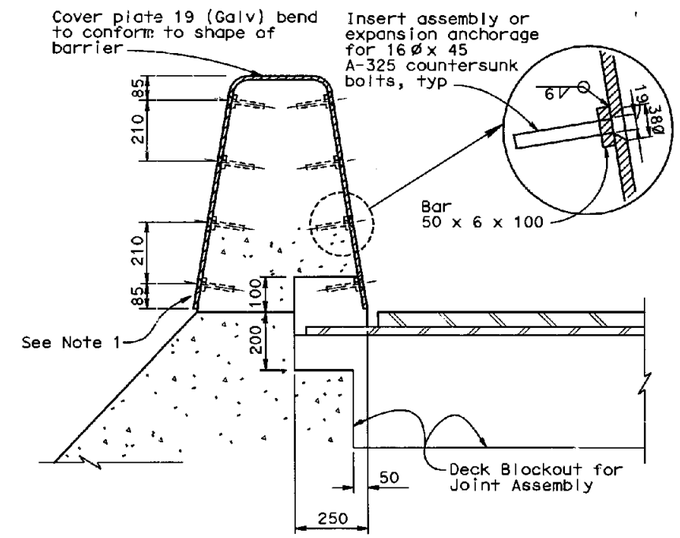

SECTION C-C
No Scale

Note:

1. For barrier curtailment adjacent to bike path, see "Bike Path Expansion Joint Details" sheet.

Deck Joint Information							"a" Dimension *		
Location		Deck Blockout Dimensions (mm)			Movement Rating (MR)	Skew	Winter	Summer	Spring & Fall
		D	B1	B2					
Westbound	Hinge EW	490	855	850	900	0	416	384	400
	Hinge FW	450	585	1020	590	0	184	156	170
	Abut E23L	**	990	970	425	0	137	123	130
Eastbound	Hinge EE	490	855	850	900	0	416	384	400

* Under SEE Seismic conditions, the maximum "a" dimension is expected to be the same as the Movement Rating (MR).

** Blockout depth "D" is 450 mm on abutment side and superstructure side

ALL DIMENSIONS ARE IN MILLIMETERS UNLESS OTHERWISE SHOWN

MARK	DATE	DESCRIPTIONS	BY	CH'D
1	9/10/07	Made Section B-B for WB only		JNB

REVISIONS

CONTRACT CHANGE ORDER NO. 13
SHEET 2 OF 3

SAN FRANCISCO OAKLAND BAY BRIDGE
EAST SPAN SEISMIC SAFETY PROJECT

OAKLAND APPROACH STRUCTURES-PHASE 1

DECK JOINT DETAILS NO.1

DESIGN OVERSIGHT
SAM AKKAD FRANCISCO CARPIO BERNARD CHAN
SIGN OFF DATE

Rev. Date: 5-18-98

	BY	CHECKED
DESIGN	Shangkuan	Atiqullah
DETAILS	van Ryn/Zucchi/Mai	Jain
QUANTITIES	Liao	E. Nichol

PREPARED FOR THE STATE OF CALIFORNIA DEPARTMENT OF TRANSPORTATION

Jal Birdy
PROJECT ENGINEER

BRIDGE NO. 34-0006 L/R
KILOMETER POST 1.6

CU 04
EA 0120L1

ORIGINAL SCALE IN MILLIMETERS FOR REDUCED PLANS 0 10 20 30 40 50 60 70 80 90 100

DISREGARD PRINTS BEARING EARLIER REVISION DATES

REVISION DATES (PRELIMINARY STAGE ONLY) 11/6/06 4/18/03 10/20/03 10/29/04 2/18/05 5/24/06 11/24/06 1/24/06 4/27/06 7/28/06

SHEET 161R1 OF 224

USERNAME => fsamson
DGN FILE => p:\4141 - OTD CS\Change Orders\04-012011-34-006-4-deckjoint_CC01.dgn

DATE PLOTTED => 10/4/2007
TIME PLOTTED => 9:52:23 AM

DIST.	COUNTY	ROUTE	KILOMETER POST TOTAL PROJECT	SHEET NO.	TOTAL SHEETS
04	Ala	80	1.6/2.7	274S	643

REGISTERED ENGINEER - CIVIL

1-29-07

PLANS APPROVAL DATE

REGISTERED PROFESSIONAL ENGINEER A.L. ELY No. 18880 Exp. 6-30-07 CIVIL STATE OF CALIFORNIA

The State of California or its officers or agents shall not be responsible for the accuracy or completeness of electronic copies of this plan sheet.

T.Y. LIN / MOFFATT & NICHOL
TWO HARRISON STREET, SUITE 500
SAN FRANCISCO, CA 94105

To get to the Caltrans web site, go to: http://www.dot.ca.gov

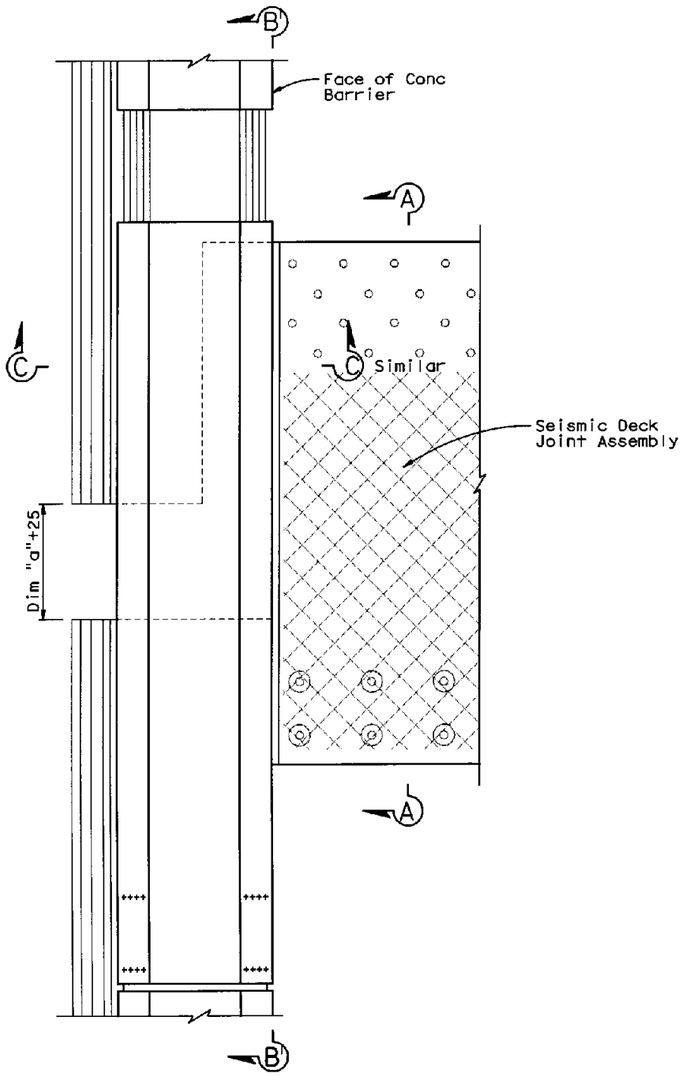

PARTIAL PLAN - HINGE EE (North Barrier Shown, South Barrier Similar)
No Scale

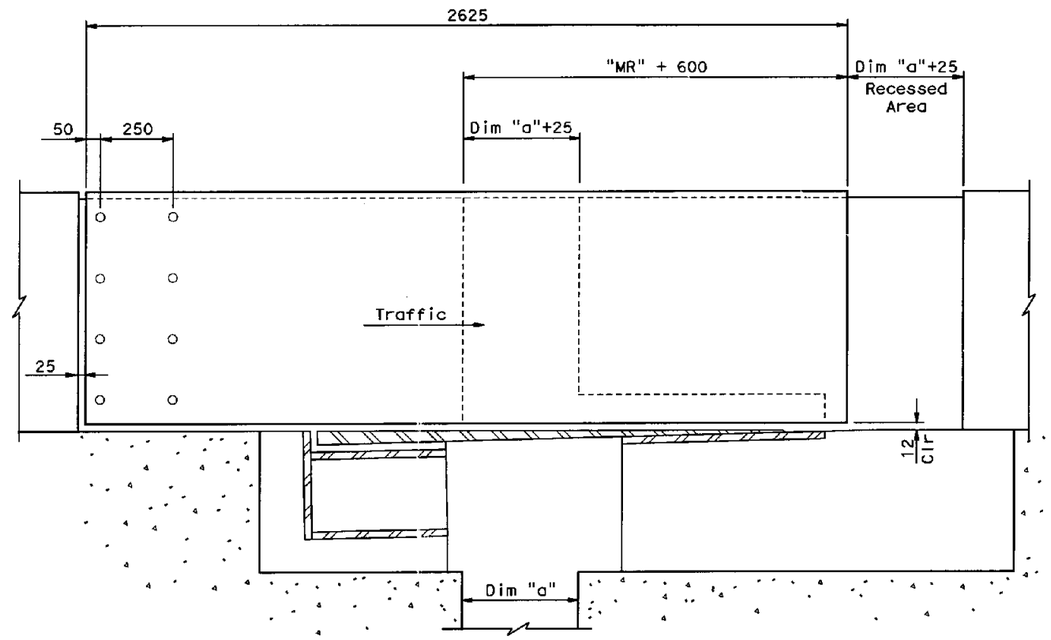

SECTION B'-B' (Eastbound traffic, Hinge EE, only)
No Scale
See "Deck Joint Details No. 1" sheet for Westbound traffic

Note:

1. For Sections A-A and C-C, see "Deck Joint Details No. 1" sheet.

SUPPLEMENTAL SHEET

CONTRACT CHANGE ORDER NO. 13
SHEET 3 OF 3

ALL DIMENSIONS ARE IN MILLIMETERS UNLESS OTHERWISE SHOWN

SAN FRANCISCO OAKLAND BAY BRIDGE
EAST SPAN SEISMIC SAFETY PROJECT

OAKLAND APPROACH STRUCTURES-PHASE 1

DECK JOINT DETAILS NO.2

DESIGN OVERSIGHT
SAM AKKAD FRANCISCO CARPIO BERNARD CHAN
SIGN OFF DATE

	BY	CHECKED
DESIGN	Shangkuan	Atiqullah
DETAILS	van Ryn/Zucchi/Wai	Jain
QUANTITIES	Liao	E. Nichol

PREPARED FOR THE STATE OF CALIFORNIA DEPARTMENT OF TRANSPORTATION

Jal Birdy
PROJECT ENGINEER

BRIDGE NO. 34-0006 L/R
KILOMETER POST 1.6

CU 04
EA 0120L1

DISREGARD PRINTS BEARING EARLIER REVISION DATES

REVISION DATES (PRELIMINARY STAGE ONLY) 11/5/06 1/18/07 10/26/07 10/27/07 2/28/08 5/20/08 11/24/08 1/5/09 1/23/09 7/28/09

SHEET 161S OF 224

Rev. Date: 5-18-98

ORIGINAL SCALE IN MILLIMETERS FOR REDUCED PLANS 0 10 20 30 40 50 60 70 80 90 100

USERNAME => fsamson
DGN FILE => p:\4141 - OTD CS\Change Orders\04-012011-34-006-U-deckjoint_CC01_Suppl.dgn

DATE PLOTTED => 10/4/2007
TIME PLOTTED => 9:52:34 AM

STATE OF CALIFORNIA - DEPARTMENT OF TRANSPORTATION

CONTRACT CHANGE ORDER MEMORANDUM

DATE: 10/10/2007 Page 1 of 1

TO: AMER BATA / BEN GHAFGHAZI	FILE: **E.A.** 04 - 0120L4
FROM: BEN GHAFGHAZI	**CO-RTE-PM** ALA-80-1.6/2.7
	FED. NO. NO FED AID
CCO#: **13** SUPPLEMENT#: **0** Category Code: **CXXX**	CONTINGENCY BALANCE (incl. this change) **$18,349,741.54**
COST: **$0.00** INCREASE ☐ DECREASE ☐	HEADQUARTERS APPROVAL REQUIRED? ☐ YES ☑ NO
SUPPLEMENTAL FUNDS PROVIDED: **$0.00**	IS THIS REQUEST IN ACCORDANCE WITH ENVIRONMENTAL DOCUMENTS? ☑ YES ☐ NO
CCO DESCRIPTION: Revise Deck Joint Details	**PROJECT DESCRIPTION:** Construct bridge, roadway, building and electrical system.

Original Contract Time:	Time Adj. This Change:	Previously Approved CCO Time Adjustments:	Percentage Time Adjusted: (including this change)	Total # of Unreconciled Deferred Time CCO(s): (including this change)
810 Day(s)	**0** Day(s)	**0** Day(s)	**0** %	**0**

THIS CHANGE ORDER PROVIDES FOR:

Replacing Structure Plan sheet 274 of 643 of the Contract Plans with the revised plan sheets as shown on sheets 2 of 3 and 3 of 3 of the Contract Change Order. The revised sheets are numbered 247R1 and 274S.

On July 20th 2007, the Contractor submitted letter 307-03 to the State asking for the length of the Barrier Rail Expansion Joint Cover Plates so they could be fabricated. The length of the plates was not clearly shown on the contract plans. This change order provides the missing detail requested by the Contractor.

No adjustment of the contract time is warranted, as this change does not affect the controlling operation.

This change was discussed and concurred by Jal N. Birdy, Project Engineer for Moffatt & Nichol and Ade Akinsanya, Structures Design.

Maintenance concurrence is not necessary since this CCO only changes details and no new work is being added.

CONCURRED BY:		
Construction Engineer:	Ben Ghafghazi	Date 10/15/07
Bridge Engineer:	Meharan Ardakanian M.A	Date 10/12/07
Project Engineer:	Ade Akinsanya	Date 10/7/07
Project Manager:		Date
FHWA Rep.:		Date
Environmental:		Date
Other (specify):	Jal Birdy, Design Consultant	Date 10/7/07
Other (specify):		Date
District Prior Approval By:		Date
HQ (Issue Approve) By:		Date
Resident Engineer's Signature:		Date 10/15/07

ESTIMATE OF COST

	THIS REQUEST	TOTAL TO DATE
ITEMS	$0.00	$0.00
FORCE ACCOUNT	$0.00	$0.00
AGREED PRICE	$0.00	$0.00
ADJUSTMENT	$0.00	$0.00
TOTAL	$0.00	$0.00

FEDERAL PARTICIPATION

☐ PARTICIPATING ☐ PARTICIPATING IN PART ☑ NONE
☐ NON-PARTICIPATING (MAINTENANCE) ☐ NON-PARTICIPATING

FEDERAL SEGREGATION (if more than one Funding Source or P.I.P. type)
☑ CCO FUNDED PER CONTRACT ☐ CCO FUNDED AS FOLLOWS

FEDERAL FUNDING SOURCE	PERCENT

STATE OF CALIFORNIA - DEPARTMENT OF TRANSPORTATION

CONTRACT CHANGE ORDER

Change Requested by: Engineer

CCO 14	Suppl. No. 0	Contract No. 04 - 0120L4	Road ALA-80-1.6/2.7	FED. AID LOC.: NO FED AID

To: **M C M CONSTRUCTION INC**

You are directed to make the following changes from the plans and specifications or do the following described work not included in the plans and specifications for this contract. ***NOTE: This change order is not effective until approved by the Engineer.***

Description of work to be done, estimate of quantities and prices to be paid. (Segregate between additional work at contract price, agreed price and force account.) Unless otherwise stated, rates for rental of equipment cover only such time as equipment is actually used and no allowance will be made for idle time. This last percentage shown is the net accumulated increase or decrease from the original quantity in the Engineer's Estimate.

Extra Work at Force Account:

As determined by the Engineer hire a security firm to provide security at the north mole gate on Maintenance frontage road during all hours of Contractor's operation.

Specialty billing in accordance with Section 9-1.03B, "Work Performed by Special Forces or Other Special Services," will be allowed for this work.

Estimated cost of Extra Work at Force Account $175,000.00

Estimated Cost: Increase ☑ Decrease ☐ $175,000.00

By reason of this order the time of completion will be adjusted as follows: 0 days

Submitted by

Signature	Resident Engineer BEN GHAFGHAZI	Date 12/12/07

Approval Recommended by

Signature	Construction Engineer Ben Ghafghazi	Date 12/12/07

Engineer Approval by

Signature	Construction Manager Amer Bata	Date 12/12/07

We the undersigned contractor, have given careful consideration to the change proposed and agree, if this proposal is approved, that we will provide all equipment, furnish the materials, except as may otherwise be noted above, and perform all services necessary for the work above specified, and will accept as full payment therefor the prices shown above.

NOTE: If you, the contractor, do not sign acceptance of this order, your attention is directed to the requirements of the specifications as to proceeding with the ordered work and filing a written protest within the time therein specified.

Contractor Acceptance by

Signature	(Print name and title) Edmundo Anfuchi, Treasurer	Date 12-12-2007

STATE OF CALIFORNIA - DEPARTMENT OF TRANSPORTATION

CONTRACT CHANGE ORDER MEMORANDUM

DATE: 10/9/2007 Page 1 of 1

TO: AMER BATA / BEN GHAFGHAZI	FILE: E.A. 04 - 0120L4
FROM: BEN GHAFGHAZI	CO-RTE-PM ALA-80-1.6/2.7
	FED. NO. NO FED AID
CCO#: 14 SUPPLEMENT#: 0 Category Code: AWZZ	CONTINGENCY BALANCE (incl. this change) $18,349,741.54
COST: $175,000.00 INCREASE ☑ DECREASE ☐	HEADQUARTERS APPROVAL REQUIRED? ☐ YES ☑ NO
SUPPLEMENTAL FUNDS PROVIDED: $175,000.00	IS THIS REQUEST IN ACCORDANCE WITH ENVIRONMENTAL DOCUMENTS? ☑ YES ☐ NO
CCO DESCRIPTION: Security Measures	**PROJECT DESCRIPTION:** Construct bridge, roadway, building and electrical system.

Original Contract Time:	Time Adj. This Change:	Previously Approved CCO Time Adjustments:	Percentage Time Adjusted: (including this change)	Total # of Unreconciled Deferred Time CCO(s): (including this change)
810 Day(s)	0 Day(s)	0 Day(s)	0 %	0

THIS CHANGE ORDER PROVIDES FOR:

Provide access control measures as determined by the Engineer.

This change is necessary to provide security measures at the north mole gate on Maintenance frontage road to replace any measures removed under this contract and install new security measures as may be required in the future.

This work is not covered by any contract items, therefore, payment for this work will be at Extra Work at Force Account for an estimated cost of $175,000.00, which can be financed from the supplemental funds of $360,000.00 which were allotted for this work.

No adjustment of contract time is warranted, as this change does not affect the controlling operation.

Design and Maintenance concurrence are not necessary since this change is contemplated in the contract documents.

CONCURRED BY:		
Construction Engineer:	Ben Ghafghazi	Date 12/12/07
Bridge Engineer:		Date
Project Engineer:		Date
Project Manager:		Date
FHWA Rep.:		Date
Environmental:		Date
Other (specify):		Date
Other (specify):		Date
District Prior Approval By:		Date
HQ (Issue Approve) By:		Date
Resident Engineer's Signature:		Date 12/12/07

ESTIMATE OF COST

	THIS REQUEST	TOTAL TO DATE
ITEMS	$0.00	$0.00
FORCE ACCOUNT	$175,000.00	$175,000.00
AGREED PRICE	$0.00	$0.00
ADJUSTMENT	$0.00	$0.00
TOTAL	$175,000.00	$175,000.00

FEDERAL PARTICIPATION

☐ PARTICIPATING ☐ PARTICIPATING IN PART ☑ NONE
☐ NON-PARTICIPATING (MAINTENANCE) ☐ NON-PARTICIPATING

FEDERAL SEGREGATION (if more than one Funding Source or P.I.P. type)
☑ CCO FUNDED PER CONTRACT ☐ CCO FUNDED AS FOLLOWS

FEDERAL FUNDING SOURCE	PERCENT

ADA Notice: For individuals with sensory disabilities, this document is available in alternate formats. For information call: (916) 654-6410 or TDD (916) 654-3880 or write Records and Forms Management, 1120 N Street, MS-89, Sacramento, CA 95814.

STATE OF CALIFORNIA - DEPARTMENT OF TRANSPORTATION

CONTRACT CHANGE ORDER

Change Requested by: Engineer

CCO 15	Suppl. No. 0	Contract No. 04 - 0120L4	Road ALA-80-1.6/2.7	FED. AID LOC.: NO FED AID

To: M C M CONSTRUCTION INC

You are directed to make the following changes from the plans and specifications or do the following described work not included in the plans and specifications for this contract. ***NOTE: This change order is not effective until approved by the Engineer.***

Description of work to be done, estimate of quantities and prices to be paid. (Segregate between additional work at contract price, agreed price and force account.) Unless otherwise stated, rates for rental of equipment cover only such time as equipment is actually used and no allowance will be made for idle time. This last percentage shown is the net accumulated increase or decrease from the original quantity in the Engineer's Estimate.

Extra Work at Lump Sum:

Revise reinforcement and extend corrugated metal tube for 610 mm diameter precast prestressed concrete piles per details shown on sheet 2 of 2 of this CCO. This sheet shall replace sheet 160 of 643 of the Contract Plans.

~~Estimated~~ Total cost of Extra Work at Lump Sum $22,800.00

Estimated Cost: Increase ☑ Decrease ☐ **$22,800.00**

By reason of this order the time of completion will be adjusted as follows: 0 days

Submitted by

Signature	Resident Engineer BEN GHAFGHAZI	Date 11/27/07

Approval Recommended by

Signature	Construction Engineer Ben Ghafghazi	Date 11/27/07

Engineer Approval by

Signature	Construction Engineer Ben Ghafghazi	Date 4/30/08

We the undersigned contractor, have given careful consideration to the change proposed and agree, if this proposal is approved, that we will provide all equipment, furnish the materials, except as may otherwise be noted above, and perform all services necessary for the work above specified, and will accept as full payment therefor the prices shown above.

NOTE: If you, the contractor, do not sign acceptance of this order, your attention is directed to the requirements of the specifications as to proceeding with the ordered work and filing a written protest within the time therein specified.

Contractor Acceptance by

Signature	(Print name and title) EDMUNDO A. PUCHI, TREASURER	Date 4/25/08

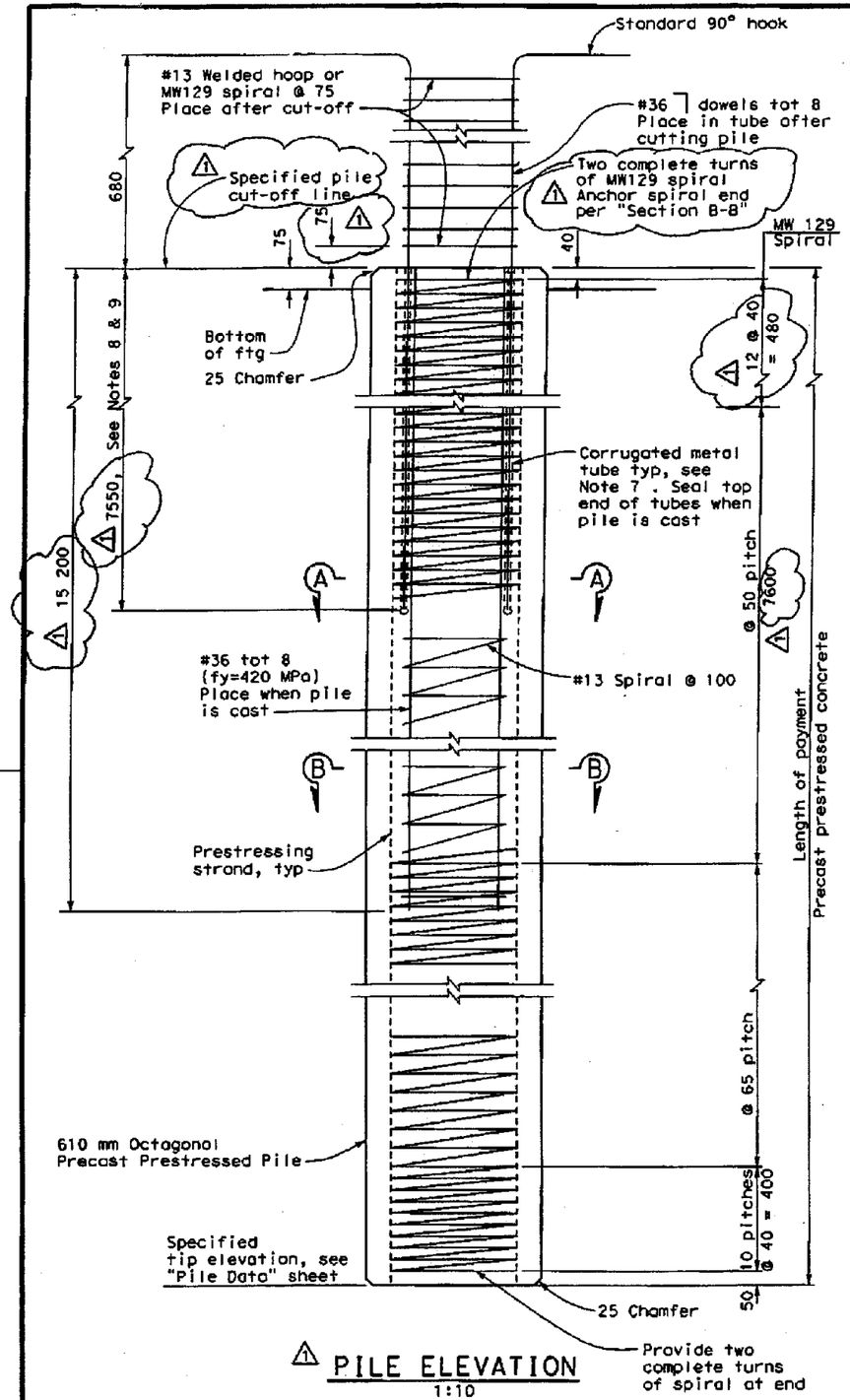

⚠1 PILE ELEVATION
1:10

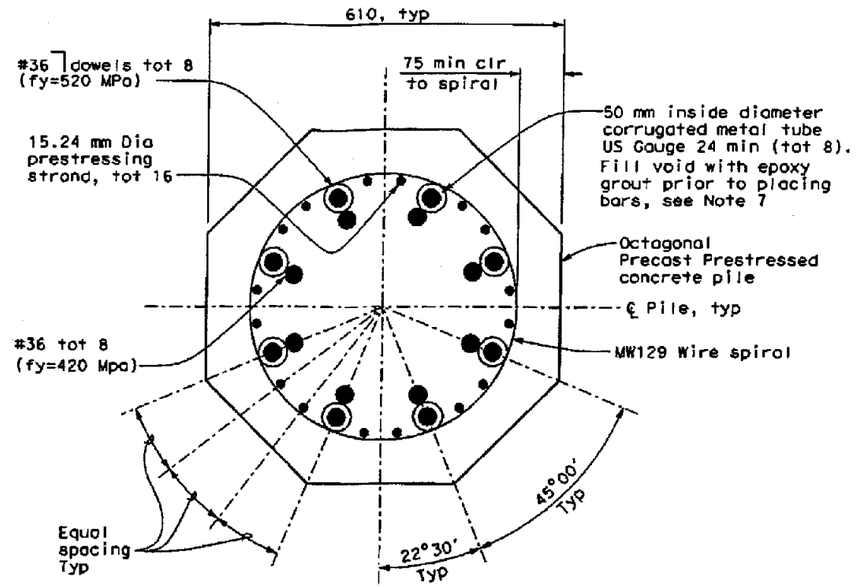

SECTION A-A
1:5

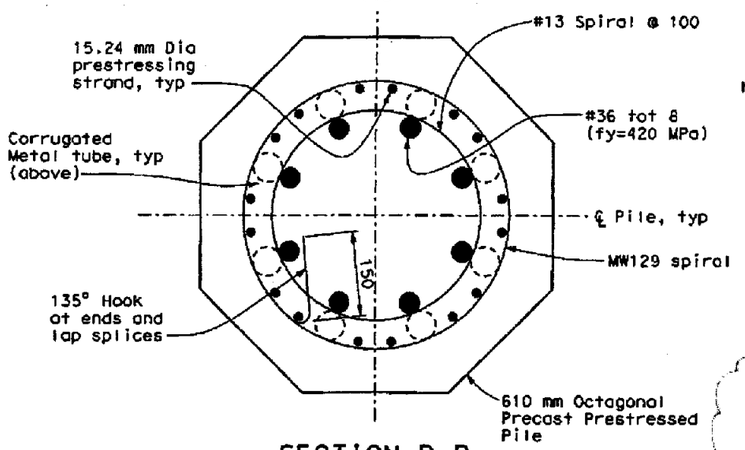

SECTION B-B
1:5

MARK	DATE	DESCRIPTIONS	BY	CH'D	CCO#
⚠1	11/13/07	REVISE DIM & DELETE PILE HEAD DET	AW	VT	

REVISION'S

CONTRACT CHANGE ORDER NO. 15
SHEET 2 OF 2

Notes:

1. Minimum prestressing force (after loss) Pf shall be 2350 kN.
2. Minimum concrete strength: f'c=48 MPa, f'ci @ transfer =28 MPa.
3. Prestressing steel shall be ASTM A416, 1860 MPa low relaxation 7-wire strands.
4. Lapped splices in spiral pile reinforcement shall be lapped 80 wire diameters minimum. Spiral pile reinforcement at splices and at ends shall be terminated by a 135° hook with 150 mm tail hooked around a longitudinal bar or strand.
5. All concrete in piles shall contain not less than 450 kilograms of cementitious material per cubic meter.
6. For specified pile tip elevation and pile design capacity, see "Pile Data" sheets.
7. Corrugated metal tubes shall be filled with epoxy grout within 600 mm from cut-off line prior to inserting dowel steel. Place dowels into tubes immediately after grouting.
8. ⚠1 After pile is driven to the specified tip elevation, the Contractor shall saw cut perimeter of pile 25 mm in depth and remove top portion of pile to the specified cut-off line. Maximum pile cut-off length is 3.000 m. Portion of pile spiral reinforcement shall remain in place, undamaged and anchored as shown on the plans. Care shall be taken not to drop any laitance or concrete into the dowel metal tubes.
9. ⚠1 The embedment length of dowel steel below actual cut-off elevation shall not be less than 4.550 m.
10. For "Bar Spiral Splice and Spiral Anchor and Welded Hoop Detail" see "Westbound Pile Details No. 2" sheet.
11. #36 dowel reinf shall conform to ASTM A615 with min fy=520 MPa. Other #36 reinf will be min fy=420 MPa.

Caltrans Metric

DIST	COUNTY	ROUTE	KILOMETER POST TOTAL PROJECT	SHEET NO.	TOTAL SHEETS
04	Ala	80	1.6/2.7	160R1	643

Adam Wang
REGISTERED ENGINEER - CIVIL
1-29-07
PLANS APPROVAL DATE
REGISTERED PROFESSIONAL ENGINEER ADAM TM WANG No. 40402 Exp. 3-31-2007 CIVIL STATE OF CALIFORNIA
The State of California or its officers or agents shall not be responsible for the accuracy or completeness of electronic copies of this plan sheet.

T.Y. LIN / MOFFATT & NICHOL
TWO HARRISON STREET, SUITE 500
SAN FRANCISCO, CA 94105

W. KOO & ASSOCIATES, INC
625 THE CITY DRIVE SOUTH, SUITE 200
ORANGE, CA 92868

DESIGN OVERSIGHT
SAM AKKAD FRANCISCO CARPIO BERNARD CHAN HASAN EL-NATUR
SIGN OFF DATE

DESIGN	BY K. Russell	CHECKED V. Trinh	
DETAILS	BY G. Buelow	CHECKED V. Trinh	
QUANTITIES	BY O. Jaradat	CHECKED H. Haroun	

PREPARED FOR THE STATE OF CALIFORNIA DEPARTMENT OF TRANSPORTATION

Adam Wang
PROJECT ENGINEER

ALL DIMENSIONS ARE IN MILLIMETERS UNLESS OTHERWISE SHOWN

BRIDGE NO. 34-0006L/R
KILOMETER POST 1.6

SAN FRANCISCO OAKLAND BAY BRIDGE
EAST SPAN SEISMIC SAFETY PROJECT
OAKLAND APPROACH STRUCTURES-PHASE 1
WESTBOUND PILE DETAILS NO. 1

Rev. Date: 5-18-98
ORIGINAL SCALE IN MILLIMETERS FOR REDUCED PLANS 0 10 20 30 40 50 60 70 80 90 100
CU 04
EA 0120L1
DIERGARD PRINTS BEARING EARLIER REVISION DATES
REVISION DATES (PRELIMINARY STAGE ONLY)
SHEET 47 OF 224

USERNAME => 18761 DATE PLOTTED => $DATE TIME PLOTTED => $TIME

T.Y.LIN INTERNATIONAL
MOFFATT & NICHOL ENGINEERS
JV

T.Y. Lin/Moffatt & Nichol Joint Venture
Two Harrison Street, Suite 500
San Francisco, CA 94105

REVISION MARKS ON CONTRACT PLAN CHANGES

SFOBB Oakland Approach Structures, Contract No. 04-0120L4

Revisions to the following plans were prepared under the supervision of the undersigned engineer.

Sheet 160R1/643 – Revision Mark 1 – Dated 11-13-07

For the project in	SF/ALA	County
Route	80	
K Post Description	04-SF Ala-80, 1.6/2.7	
District/EA	0120L1	

(Signature)
Adam Wang
(Name)
Senior Engineer
(Title)
C40402
(Registration No.)
3/31/2009
(Date of Expiration)

12-4-07
(Date)

P.E. Stamp / Company Name and Address

PBS&J-625 The City Drive South , Suite 200
Orange, Ca. 92868-4946

REGISTERED PROFESSIONAL ENGINEER
ADAM T. M. WANG
No. 40402
EXP. 3/31/2009
CIVIL
STATE OF CALIFORNIA

DIST	COUNTY	ROUTE	KILOMETER POST TOTAL PROJECT	SHEET NO.	TOTAL SHEETS
04	Ala	80	1.6/2.7	160R1	643

Adam Wang
REGISTERED ENGINEER - CIVIL
~~11-29-07~~
PLANS APPROVAL DATE

REGISTERED PROFESSIONAL ENGINEER ADAM TN WANG No. 40402 Exp. 3-31-2007 CIVIL STATE OF CALIFORNIA

The State of California or its officers or agents shall not be responsible for the accuracy or completeness of electronic copies of this plan sheet.

T.Y. LIN / MOFFATT & NICHOL
TWO HARRISON STREET, SUITE 500
SAN FRANCISCO, CA 94105

W. KOO & ASSOCIATES, INC
625 THE CITY DRIVE SOUTH, SUITE 200
ORANGE, CA 92868

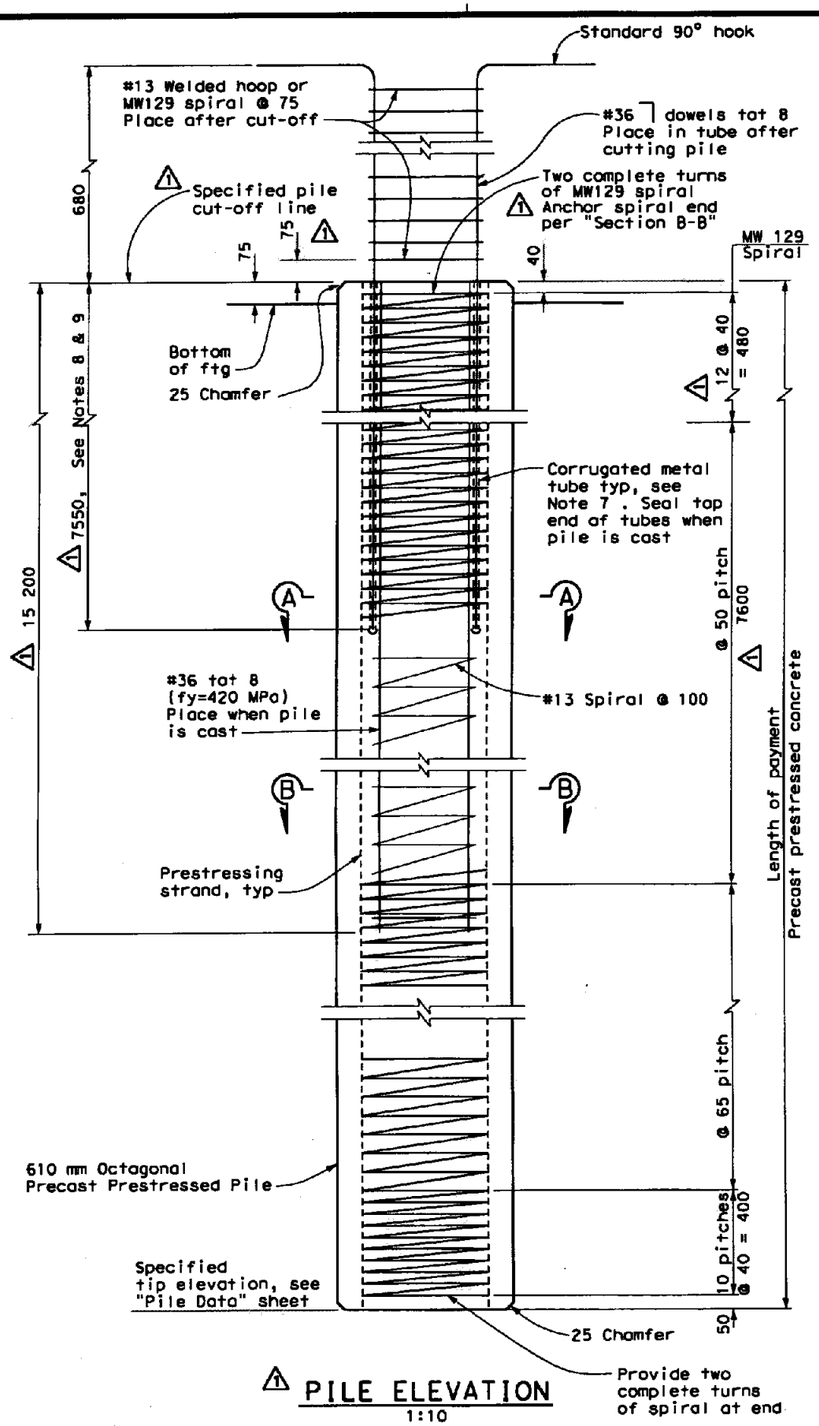

PILE ELEVATION
1:10

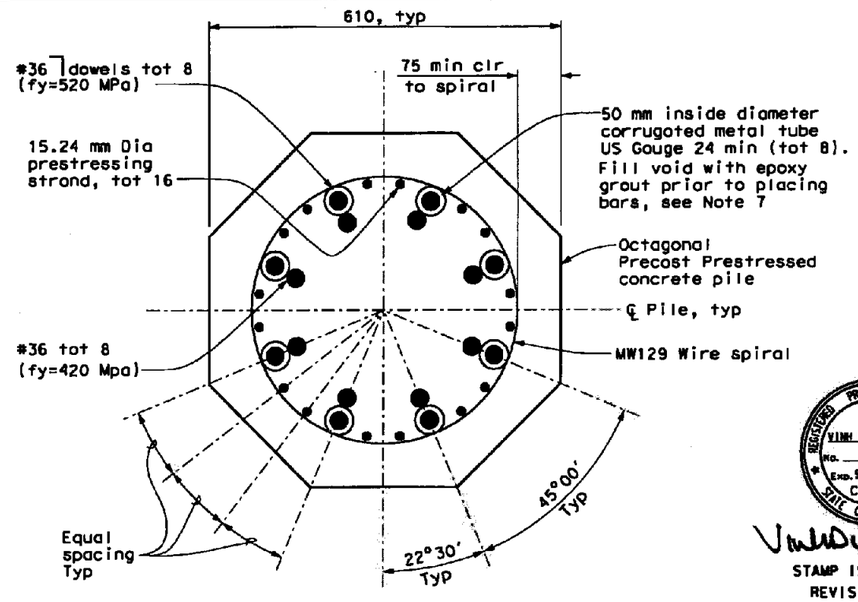

SECTION A-A
1:5

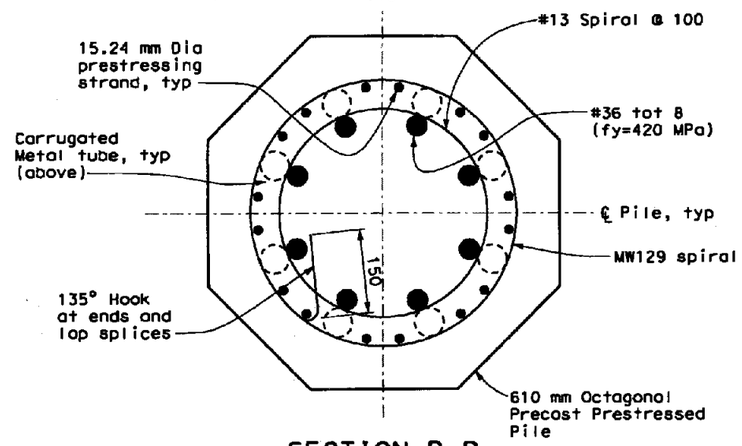

SECTION B-B
1:5

REGISTERED PROFESSIONAL ENGINEER VINH DIEU TRINH No. 50685 Exp. 9-30-2009 CIVIL STATE OF CALIFORNIA

STAMP IS VALID FOR REVISION 1 ONLY

MARK	DATE	DESCRIPTIONS	BY	CH'D	CCO#
1	11/13/07	REVISE DIM & DELETE PILE HEAD DET	AW	VT	

REVISIONS

CONTRACT CHANGE ORDER NO. 15
SHEET 2 OF 2 04-012014

1

Notes:

1. Minimum prestressing force (after loss) Pf shall be 2350 kN.
2. Minimum concrete strength: f'c=48 MPa, f'ci @ transfer =28 MPa.
3. Prestressing steel shall be ASTM A416, 1860 MPa low relaxation 7-wire strands.
4. Lapped splices in spiral pile reinforcement shall be lapped 80 wire diameters minimum. Spiral pile reinforcement at splices and at ends shall be terminated by a 135° hook with 150 mm tail hooked around a longitudinal bar or strand.
5. All concrete in piles shall contain not less than 450 kilograms of cementitious material per cubic meter.
6. For specified pile tip elevation and pile design capacity, see "Pile Data" sheets.
7. Corrugated metal tubes shall be filled with epoxy grout within 600 mm from cut-off line prior to inserting dowel steel. Place dowels into tubes immediately after grouting.
8. 1 After pile is driven to the specified tip elevation, the Contractor shall saw cut perimeter of pile 25 mm in depth and remove top portion of pile to the specified cut-off line. Maximum pile cut-off length is 3.000 m. Portion of pile spiral reinforcement shall remain in place, undamaged and anchored as shown on the plans. Care shall be taken not to drop any laitance or concrete into the dowel metal tubes.
9. 1 The embedment length of dowel steel below actual cut-off elevation shall not be less than 4.550 m.
10. For "Bar Spiral Splice and Spiral Anchor and Welded Hoop Detail" see "Westbound Pile Details No. 2" sheet.
11. #36 dowel reinf shall conform to ASTM A615 with min fy=520 MPa. Other #36 reinf will be min fy=420 MPa.

ALL DIMENSIONS ARE IN MILLIMETERS UNLESS OTHERWISE SHOWN

SAN FRANCISCO OAKLAND BAY BRIDGE
EAST SPAN SEISMIC SAFETY PROJECT

OAKLAND APPROACH STRUCTURES-PHASE 1

WESTBOUND PILE DETAILS NO. 1

DESIGN OVERSIGHT
SAM AKSAD FRANCISCO CAMPIO BERNARD CHAN HASAN EL-NATUR
SIGN OFF DATE
Rev. Dates 5-18-99

DESIGN	BY K. Russell	CHECKED V. Trinh	
DETAILS	BY G. Buelow	CHECKED V. Trinh	
QUANTITIES	BY O. Jarodat	CHECKED H. Haroun	

PREPARED FOR THE STATE OF CALIFORNIA DEPARTMENT OF TRANSPORTATION

Adam Wang
PROJECT ENGINEER

BRIDGE NO. 34-0006L/R
KILOMETER POST 1.6

CU 04
EA 0120L1

DISREGARD PRINTS BEARING EARLIER REVISION DATES

REVISION DATES (PRELIMINARY STAGE ONLY) 10/28/03 1/30/04 10/29/04 2/7/05 5/27/05 11/17/05 1/31/06 5/31/06 1/30/06 11/13/07

SHEET 47 OF 224

ORIGINAL SCALE IN MILLIMETERS FOR REDUCED PLANS 0 10 20 30 40 50 60 70 80 90 100

FILE => ...\04-012011-34-0006f-piledet1.dgn

USERNAME => $USER DATE PLOTTED => 6/19/2008 TIME PLOTTED => 1:56:57 PM

STATE OF CALIFORNIA - DEPARTMENT OF TRANSPORTATION

CONTRACT CHANGE ORDER MEMORANDUM

DATE: 06/03/2008

TO: AMER BATA / BEN GHAFGHAZI	FILE: E.A. 04 - 0120L4
	CO-RTE-PM ALA-80-1.6/2.7
FROM: BEN GHAFGHAZI	FED. NO. NO FED AID
CCO#: 15 SUPPLEMENT#: 0 Category Code: CHPG	CONTINGENCY BALANCE (incl. this change) $18,070,684.84
COST: $22,800.00 INCREASE ☑ DECREASE ☐	HEADQUARTERS APPROVAL REQUIRED? ☐ YES ☑ NO
SUPPLEMENTAL FUNDS PROVIDED: $0.00	IS THIS REQUEST IN ACCORDANCE WITH ENVIRONMENTAL DOCUMENTS? ☑ YES ☐ NO
CCO DESCRIPTION: 610 mm Precast Prestressed Pile Changes	**PROJECT DESCRIPTION:** Construct bridge, roadway, building and electrical system.

Original Contract Time:	Time Adj. This Change:	Previously Approved CCO Time Adjustments:	Percentage Time Adjusted: (including this change)	Total # of Unreconciled Deferred Time CCO(s): (including this change)
810 Day(s)	0 Day(s)	0 Day(s)	0 %	0

THIS CHANGE ORDER PROVIDES FOR:

Extending the embedment length of the 8 #36 vertical reinforcement and the corrugated metal tube 3 M into the 610 mm precast pile as shown on sheet 2 of 2 of this contract change order. This sheet shall replace sheet 160 of 643 of the contract plans.

Section 10-1.50,"Piling," subsection, Pile Penetration Acceptance," allows accepting piles driven within 3 M of specified tip elevation if refusal from continuous driving is encountered. Design has requested extending the reinforcement to allow minimum pile reinforcement if refusal is reached short of the specified tip elevation by up to 3 M.

This change order will be paid as Extra Work at Agreed Lump Sum for a cost increase of $22,800.00.

This change has been discussed and concurred with Ade Akinsanya, Structures Design, and Jal Birdy, structure designer for Moffat and Nichol. Maintenance concurrence is not necessary because this change does not affect any features that will require periodic maintenance.

No adjustment of the contract time is warranted, as this change does not affect the controlling operation.

CONCURRED BY:		
Construction Engineer:	Ben Ghafghazi	Date 11/27/07
Bridge Engineer:	Mehran Ardakanian	Date 11/27/07
Project Engineer:	Jaime Gutierrez	Date 6/3/08
Project Manager:		Date
FHWA Rep.:		Date
Environmental:		Date
Other (specify):	Ade Akinsanya, Structures Design	Date 10/4/07
Other (specify):	Jal Birdy, Moffat Nichol	Date 10/4/07
District Prior Approval By:		Date
HQ (Issue Approve) By:		Date
Resident Engineer's Signature:		Date 11/27/07

ESTIMATE OF COST

	THIS REQUEST	TOTAL TO DATE
ITEMS	$0.00	$0.00
FORCE ACCOUNT	$0.00	$0.00
AGREED PRICE	$22,800.00	$22,800.00
ADJUSTMENT	$0.00	$0.00
TOTAL	$22,800.00	$22,800.00

FEDERAL PARTICIPATION

☐ PARTICIPATING ☐ PARTICIPATING IN PART ☑ NONE
☐ NON-PARTICIPATING (MAINTENANCE) ☐ NON-PARTICIPATING

FEDERAL SEGREGATION (if more than one Funding Source or P.I.P. type)
☑ CCO FUNDED PER CONTRACT ☐ CCO FUNDED AS FOLLOWS

FEDERAL FUNDING SOURCE	PERCENT

ADA Notice: For individuals with sensory disabilities, this document is available in alternate formats. For information call: (916) 654-6410 or TDD (916) 654-3880 or write Records and Forms Management, 1120 N Street, MS-89, Sacramento, CA 95814.

STATE OF CALIFORNIA - DEPARTMENT OF TRANSPORTATION

CONTRACT CHANGE ORDER

Change Requested by: Engineer

CCO 16	Suppl. No. 0	Contract No. 04 - 0120L4	Road ALA-80-1.6/2.7	FED. AID LOC.: NO FED AID

To: **M C M CONSTRUCTION INC**

You are directed to make the following changes from the plans and specifications or do the following described work not included in the plans and specifications for this contract. ***NOTE: This change order is not effective until approved by the Engineer.***

Description of work to be done, estimate of quantities and prices to be paid. (Segregate between additional work at contract price, agreed price and force account.) Unless otherwise stated, rates for rental of equipment cover only such time as equipment is actually used and no allowance will be made for idle time. This last percentage shown is the net accumulated increase or decrease from the original quantity in the Engineer's Estimate.

Extra Work at Force Account:

Provide for the State's share of SWPPP maintenance costs in accordance with Section 10-1.03, " Water Pollution Control," subsection, "Payment," of the Special Provisions.

Estimated cost of Extra Work at Force Account $5,600.00

Estimated Cost: Increase ☑ Decrease ☐ **$5,600.00**

By reason of this order the time of completion will be adjusted as follows: 0 days

Submitted by

Signature	Resident Engineer BEN GHAFGHAZI	Date 10/31/07

Approval Recommended by

Signature	Construction Engineer Ben Ghafghazi	Date 10/31/07

Engineer Approval by

Signature	Construction Engineer Ben Ghafghazi	Date 1/30/08

We the undersigned contractor, have given careful consideration to the change proposed and agree, if this proposal is approved, that we will provide all equipment, furnish the materials, except as may otherwise be noted above, and perform all services necessary for the work above specified, and will accept as full payment therefor the prices shown above.

NOTE: If you, the contractor, do not sign acceptance of this order, your attention is directed to the requirements of the specifications as to proceeding with the ordered work and filing a written protest within the time therein specified.

Contractor Acceptance by

Signature	(Print name and title) Treasurer General Counsel	Date 11/13/07

STATE OF CALIFORNIA - DEPARTMENT OF TRANSPORTATION

CONTRACT CHANGE ORDER MEMORANDUM

TO: AMER BATA / BEN GHAFGHAZI

FROM: BEN GHAFGHAZI

FILE: E.A. 04 - 0120L4
CO-RTE-PM ALA-80-1.6/2.7
FED. NO. NO FED AID

CCO#: 16 SUPPLEMENT#: 0 Category Code: AWZZ

CONTINGENCY BALANCE (incl. this change) **$18,349,696.54**

COST: **$5,600.00** INCREASE ☑ DECREASE ☐

HEADQUARTERS APPROVAL REQUIRED? ☐ YES ☑ NO

SUPPLEMENTAL FUNDS PROVIDED: **$5,600.00**

IS THIS REQUEST IN ACCORDANCE WITH ENVIRONMENTAL DOCUMENTS? ☑ YES ☐ NO

CCO DESCRIPTION:
SWPPP Maintenance

PROJECT DESCRIPTION:
Construct bridge, roadway, building and electrical system.

Original Contract Time:	Time Adj. This Change:	Previously Approved CCO Time Adjustments:	Percentage Time Adjusted: (including this change)	Total # of Unreconciled Deferred Time CCO(s): (including this change)
810 Day(s)	0 Day(s)	0 Day(s)	0 %	0

THIS CHANGE ORDER PROVIDES FOR:
Payment of State's share of SWPPP Maintenance costs per Section 10-1.03, " Water Pollution Control," subsection, "Payment," of the Special Provisions.

This work will be performed as Extra Work at Force Account for an estimated cost of $5,600.00, which can be financed from the supplemental funds of $5,600.00 which were allotted for this work.

No adjustment of the contract time is warranted, as this change does not affect the controlling operation.

Design and Maintenance concurrence is not required as this work is anticipated by the contract documents.

CONCURRED BY:

Construction Engineer:	Ben Ghafghazi	Date 10/31/07
Bridge Engineer:		Date
Project Engineer:		Date
Project Manager:		Date
FHWA Rep.:		Date
Environmental:		Date
Other (specify):		Date
Other (specify):		Date
District Prior Approval By:		Date
HQ (Issue Approve) By:		Date
Resident Engineer's Signature:		Date 10/31/07

ESTIMATE OF COST

	THIS REQUEST	TOTAL TO DATE
ITEMS	$0.00	$0.00
FORCE ACCOUNT	$5,600.00	$5,600.00
AGREED PRICE	$0.00	$0.00
ADJUSTMENT	$0.00	$0.00
TOTAL	$5,600.00	$5,600.00

FEDERAL PARTICIPATION

☐ PARTICIPATING ☐ PARTICIPATING IN PART ☑ NONE
☐ NON-PARTICIPATING (MAINTENANCE) ☐ NON-PARTICIPATING

FEDERAL SEGREGATION (if more than one Funding Source or P.I.P. type)
☑ CCO FUNDED PER CONTRACT ☐ CCO FUNDED AS FOLLOWS

FEDERAL FUNDING SOURCE	PERCENT

ADA Notice: For individuals with sensory disabilities, this document is available in alternate formats. For information call: (916) 654-6410 or TDD (916) 654-3880 or write Records and Forms Management, 1120 N Street, MS-89, Sacramento, CA 95814.

STATE OF CALIFORNIA - DEPARTMENT OF TRANSPORTATION

CONTRACT CHANGE ORDER MEMORANDUM

DATE: 8/4/2009 Page 1 of 1

TO: AMER BATA / BEN GHAFGHAZI

FROM: BEN GHAFGHAZI

FILE: E.A. 04 - 0120L4
CO-RTE-PM ALA-80-1.6/2.7
FED. NO. NO FED AID

CCO#: 16 | SUPPLEMENT#: 1 | Category Code: AWZZ

CONTINGENCY BALANCE (incl. this change) **$5,854,333.20**

COST: **$14,400.00** INCREASE ☑ DECREASE ☐

HEADQUARTERS APPROVAL REQUIRED? ☐ YES ☑ NO

SUPPLEMENTAL FUNDS PROVIDED: **$0.00**

IS THIS REQUEST IN ACCORDANCE WITH ENVIRONMENTAL DOCUMENTS? ☑ YES ☐ NO

CCO DESCRIPTION:
Additional funds for SWPPP maintenance.

PROJECT DESCRIPTION:
Construct bridge, roadway, building and electrical system.

Original Contract Time:	Time Adj. This Change:	Previously Approved CCO Time Adjustments:	Percentage Time Adjusted: (including this change)	Total # of Unreconciled Deferred Time CCO(s): (including this change)
810 Day(s)	0 Day(s)	184 Day(s)	23 %	10

THIS CHANGE ORDER PROVIDES FOR:
Additional funds for payment of State's share of SWPPP maintenance costs per Section 10-1.03, " Water Pollution Control," subsection, "Payment," of the Special Provisions.

This change is necessary because the extent of SWPPP maintenance work is greater than $5,600.00 anticipated in the supplemental funds. This work will be paid as Extra Work at Force Account for $14,400.00, which can be financed from the contingency fund.

Design and Maintenance concurrence is not required as this work is anticipated by the contract documents.

No adjustment of the contract time is warranted, as this change does not affect the controlling operation.

CONCURRED BY:

Construction Engineer:	Ben Ghafghazi	Date 8/4/09
Bridge Engineer:		Date
Project Engineer:		Date
Project Manager:		Date
FHWA Rep.:		Date
Environmental:		Date
Other (specify):		Date
Other (specify):		Date
District Prior Approval By:		Date
HQ (Issue Approve) By:		Date
Resident Engineer's Signature:		Date 8/4/09

ESTIMATE OF COST

	THIS REQUEST	TOTAL TO DATE
ITEMS	$0.00	$0.00
FORCE ACCOUNT	$14,400.00	$20,000.00
AGREED PRICE	$0.00	$0.00
ADJUSTMENT	$0.00	$0.00
TOTAL	$14,400.00	$20,000.00

FEDERAL PARTICIPATION

☐ PARTICIPATING ☐ PARTICIPATING IN PART ☑ NONE
☐ NON-PARTICIPATING (MAINTENANCE) ☐ NON-PARTICIPATING

FEDERAL SEGREGATION (if more than one Funding Source or P.I.P. type)
☑ CCO FUNDED PER CONTRACT ☐ CCO FUNDED AS FOLLOWS

FEDERAL FUNDING SOURCE	PERCENT
??	

ADA Notice: For individuals with sensory disabilities, this document is available in alternate formats. For information call: (916) 654-6410 or TDD (916) 654-3880 or write Records and Forms Management, 1120 N Street, MS-89, Sacramento, CA 95814.

CONTRACT CHANGE ORDER

Change Requested by: Engineer

CCO 16	Suppl. No. 1	Contract No. 04 - 0120L4	Road ALA-80-1.6/2.7	FED. AID LOC.: NO FED AID

To: **M C M CONSTRUCTION INC**

You are directed to make the following changes from the plans and specifications or do the following described work not included in the plans and specifications for this contract. ***NOTE: This change order is not effective until approved by the Engineer.***

Description of work to be done, estimate of quantities and prices to be paid. (Segregate between additional work at contract price, agreed price and force account.) Unless otherwise stated, rates for rental of equipment cover only such time as equipment is actually used and no allowance will be made for idle time. This last percentage shown is the net accumulated increase or decrease from the original quantity in the Engineer's Estimate.

Provide additional funds for SWPPP maintenance.

Extra Work at Force Account:

Provide for the State's share of SWPPP maintenance costs in accordance with Section 10-1.03, " Water Pollution Control," subsection, "Payment," of the Special Provisions.

Estimated cost of Extra Work at Force Account $14,400.00

Estimated Cost: **Increase** ☑ **Decrease** ☐ **$14,400.00**

By reason of this order the time of completion will be adjusted as follows: 0 days

Signature	**Resident Engineer** BEN GHAFGHAZI	**Date** 8/4/09
Signature	**Construction Engineer** Ben Ghafghazi	**Date** 8/4/09
Signature	**Construction Engineer** Ben Ghafghazi	**Date** 8/4/09

We the undersigned contractor, have given careful consideration to the change proposed and agree, if this proposal is approved, that we will provide all equipment, furnish the materials, except as may otherwise be noted above, and perform all services necessary for the work above specified, and will accept as full payment therefor the prices shown above.

NOTE: If you, the contractor, do not sign acceptance of this order, your attention is directed to the requirements of the specifications as to proceeding with the ordered work and filing a written protest within the time therein specified.

Signature N/A	**(Print name and title)**	**Date**

CONTRACT CHANGE ORDER

Change Requested by: Engineer

CCO 17	Suppl. No. 0	Contract No. 04 - 0120L4	Road ALA-80-1.6/2.7	FED. AID LOC.: NO FED AID

To: **M C M CONSTRUCTION INC**

You are directed to make the following changes from the plans and specifications or do the following described work not included in the plans and specifications for this contract. ***NOTE: This change order is not effective until approved by the Engineer.***

Description of work to be done, estimate of quantities and prices to be paid. (Segregate between additional work at contract price, agreed price and force account.) Unless otherwise stated, rates for rental of equipment cover only such time as equipment is actually used and no allowance will be made for idle time. This last percentage shown is the net accumulated increase or decrease from the original quantity in the Engineer's Estimate.

In accordance with Section 10-1.17, "Document Management System," subsection "Schedule of Values," of the Special Provisions provide the following additional services:

Extra Work at Force Account:

Provide additional copier maintenance services as determined in by the Engineer..

Estimated cost of Extra Work at Force Account $7,500.00

Extra Work at Unit Price:

Provide 25 Client DMS Software and 50 Client Software Maintenance fees.

Document Management System Software. . . . . 25 each @ $1,905.20 = $47,630.00
Software Maintenance. . . . . 50 each @ $ 369.60 = $18,480.00

The above unit prices constitute full compensation, including all markups, for the work of this change.

Estimated Cost: Increase ☑ Decrease ☐ **$73,610.00**

By reason of this order the time of completion will be adjusted as follows: 0 days

Submitted by		
Signature	Resident Engineer BEN GHAFGHAZI	Date 10/31/07
Approval Recommended by		
Signature	Construction Engineer Ben Ghafghazi	Date 10/31/07
Engineer Approval by		
Signature	Construction Engineer Ben Ghafghazi	Date 1/10/08

We the undersigned contractor, have given careful consideration to the change proposed and agree, if this proposal is approved, that we will provide all equipment, furnish the materials, except as may otherwise be noted above, and perform all services necessary for the work above specified, and will accept as full payment therefor the prices shown above.

NOTE: If you, the contractor, do not sign acceptance of this order, your attention is directed to the requirements of the specifications as to proceeding with the ordered work and filing a written protest within the time therein specified.

Contractor Acceptance by		
Signature	(Print name and title) EDMUNDO TUCHI, TREASURER	Date 12/20/07

STATE OF CALIFORNIA - DEPARTMENT OF TRANSPORTATION

CONTRACT CHANGE ORDER MEMORANDUM

DATE: 10/30/2007 Page 1 of 1

TO: AMER BATA / BEN GHAFGHAZI	FILE: E.A. 04 - 0120L4
FROM: BEN GHAFGHAZI	CO-RTE-PM ALA-80-1.6/2.7
	FED. NO. NO FED AID
CCO#: 17 SUPPLEMENT#: 0 Category Code: CXSA	CONTINGENCY BALANCE (incl. this change) **$18,276,086.54**
COST: **$73,610.00** INCREASE ☑ DECREASE ☐	HEADQUARTERS APPROVAL REQUIRED? ☐ YES ☑ NO
SUPPLEMENTAL FUNDS PROVIDED: **$0.00**	IS THIS REQUEST IN ACCORDANCE WITH ENVIRONMENTAL DOCUMENTS? ☑ YES ☐ NO
CCO DESCRIPTION: PMIV Licenses	**PROJECT DESCRIPTION:** Construct bridge, roadway, building and electrical system.

Original Contract Time:	Time Adj. This Change:	Previously Approved CCO Time Adjustments:	Percentage Time Adjusted: (including this change)	Total # of Unreconciled Deferred Time CCO(s): (including this change)
810 Day(s)	0 Day(s)	0 Day(s)	0 %	0

THIS CHANGE ORDER PROVIDES FOR:

Provide additional Document Management Software and copier support in accordance with Section 10-1.17, "Document Management System," subsection "Schedule of Values," of the Special Provisions.

Twenty-five additional DMS Software and 50 Client Software Maintenance fees are needed for Caltrans use. The contract estimated 50 users from Caltrans. It is anticipated that 75 users will need access to PMIV. The additional users include additional field staff and METS. This work will be paid as extra work at agreed unit prices based on the Contractor's Schedule of Values as follows:

Document Management System Software. . . . . 25 each @ $1,905.20 = $47,630.00
Software Maintenance. . . . . 50 each @ $ 369.60 = $18,480.00

Additional copier maintenance fees are anticipated based on experience from previous SFOBB projects using PMIV. The Contractor's bid amount is $511.05 per month. It is estimated that $300.00 additional per month is required. This work will be paid as extra work at force account for and estimated amount of $7,500.00.

The work of this CCO can be financed from the contingency fund. A cost analysis is on file.

No adjustment of contract time is warranted, as this change does not affect the controlling operation.

Design and Maintenance concurrence is not required since this CCO is for administrative purposes only.

CONCURRED BY:		
Construction Engineer:	Ben Ghafghazi	Date 10/31/07
Bridge Engineer:		Date
Project Engineer:		Date
Project Manager:		Date
FHWA Rep.:		Date
Environmental:		Date
Other (specify):		Date
Other (specify):		Date
District Prior Approval By:		Date
HQ (Issue Approve) By:		Date
Resident Engineer's Signature:		Date 10/31/07

ESTIMATE OF COST

	THIS REQUEST	TOTAL TO DATE
ITEMS	$0.00	$0.00
FORCE ACCOUNT	$7,500.00	$7,500.00
AGREED PRICE	$66,110.00	$66,110.00
ADJUSTMENT	$0.00	$0.00
TOTAL	$73,610.00	$73,610.00

FEDERAL PARTICIPATION

☐ PARTICIPATING ☐ PARTICIPATING IN PART ☐ NONE
☐ NON-PARTICIPATING (MAINTENANCE) ☐ NON-PARTICIPATING

FEDERAL SEGREGATION (if more than one Funding Source or P.I.P. type)
☑ CCO FUNDED PER CONTRACT ☑ CCO FUNDED AS FOLLOWS

FEDERAL FUNDING SOURCE	PERCENT

ADA Notice: For individuals with sensory disabilities, this document is available in alternate formats. For information call: (916) 654-6410 or TDD (916) 654-3880 or write Records and Forms Management, 1120 N Street, MS-89, Sacramento, CA 95814.

STATE OF CALIFORNIA - DEPARTMENT OF TRANSPORTATION

CONTRACT CHANGE ORDER MEMORANDUM

DATE: 3/11/2008 Page 1 of 1

TO: AMER BATA / BEN GHAFGHAZI	FILE: E.A. 04 - 0120L4
FROM: BEN GHAFGHAZI	CO-RTE-PM ALA-80-1.6/2.7
	FED. NO. NO FED AID
CCO#: 17 SUPPLEMENT#: 1 Category Code: CXSA	CONTINGENCY BALANCE (incl. this change) $16,863,578.50
COST: $66,110.00 INCREASE ☑ DECREASE ☐	HEADQUARTERS APPROVAL REQUIRED? ☐ YES ☑ NO
SUPPLEMENTAL FUNDS PROVIDED: $0.00	IS THIS REQUEST IN ACCORDANCE WITH ENVIRONMENTAL DOCUMENTS? ☑ YES ☐ NO
CCO DESCRIPTION: PMIV Licenses	**PROJECT DESCRIPTION:** Construct bridge, roadway, building and electrical system.

Original Contract Time:	Time Adj. This Change:	Previously Approved CCO Time Adjustments:	Percentage Time Adjusted: (including this change)	Total # of Unreconciled Deferred Time CCO(s): (including this change)
810 Day(s)	0 Day(s)	0 Day(s)	0 %	2

THIS CHANGE ORDER PROVIDES FOR:

Provide additional Document Management Software and copier support in accordance with Section 10-1.17, "Document Management System," subsection "Schedule of Values," of the Special Provisions.

Twenty-five additional DMS Software and 50 Client Software Maintenance fees are needed for Caltrans use. The contract estimated 50 users from Caltrans. CCO 17 increased users to 75 for additional field staff and METS. An additional 25 users will be added due to a further increase in field staff. This work will be paid as extra work at agreed unit prices based on the Contractor's Schedule of Values as follows:

Document Management System Software. . . . . 25 each @ $1,905.20 = $47,630.00
Software Maintenance. . . . . 50 each @ $ 369.60 = $18,480.00

The work of this CCO can be financed from the contingency fund. A cost analysis is on file.

No adjustment of contract time is warranted, as this change does not affect the controlling operation.

Design and Maintenance concurrence is not required since this CCO is for administrative purposes only.

CONCURRED BY:		
Construction Engineer:	Ben Ghafghazi	Date 3/11/08
Bridge Engineer:		Date
Project Engineer:		Date
Project Manager:		Date
FHWA Rep.:		Date
Environmental:		Date
Other (specify):		Date
Other (specify):		Date
District Prior Approval By:		Date
HQ (Issue Approve) By:		Date
Resident Engineer's Signature:		Date 3/11/08

ESTIMATE OF COST

	THIS REQUEST	TOTAL TO DATE
ITEMS	$0.00	$0.00
FORCE ACCOUNT	$0.00	$7,500.00
AGREED PRICE	$66,110.00	$132,220.00
ADJUSTMENT	$0.00	$0.00
TOTAL	$66,110.00	$139,720.00

FEDERAL PARTICIPATION

☐ PARTICIPATING ☐ PARTICIPATING IN PART ☑ NONE
☐ NON-PARTICIPATING (MAINTENANCE) ☐ NON-PARTICIPATING

FEDERAL SEGREGATION (if more than one Funding Source or P.I.P. type)
☑ CCO FUNDED PER CONTRACT ☐ CCO FUNDED AS FOLLOWS

FEDERAL FUNDING SOURCE	PERCENT

ADA Notice: For individuals with sensory disabilities, this document is available in alternate formats. For information call: (916) 654-6410 or TDD (916) 654-3880 or write Records and Forms Management, 1120 N Street, MS-89, Sacramento, CA 95814.

STATE OF CALIFORNIA - DEPARTMENT OF TRANSPORTATION

CONTRACT CHANGE ORDER

Change Requested by: Engineer

CCO 17	Suppl. No. 1	Contract No. 04 - 0120L4	Road ALA-80-1.6/2.7	FED. AID LOC.: NO FED AID

To: **M C M CONSTRUCTION INC**

You are directed to make the following changes from the plans and specifications or do the following described work not included in the plans and specifications for this contract. ***NOTE: This change order is not effective until approved by the Engineer.***

Description of work to be done, estimate of quantities and prices to be paid. (Segregate between additional work at contract price, agreed price and force account.) Unless otherwise stated, rates for rental of equipment cover only such time as equipment is actually used and no allowance will be made for idle time. This last percentage shown is the net accumulated increase or decrease from the original quantity in the Engineer's Estimate.

Extra Work at Unit Price:

Provide 25 Client DMS Software and 50 Client Software Maintenance fees.

Document Management System Software. . . . . 25 each @ $1,905.20 = $47,630.00
Software Maintenance. . . . . 50 each @ $ 369.60 = $18,480.00

The above unit prices constitute full compensation, including all markups, for the work of this change.

Estimated Cost: Increase ☑ **Decrease** ☐ **$66,110.00**

By reason of this order the time of completion will be adjusted as follows: 0 days

Submitted by

Signature	Resident Engineer BEN GHAFGHAZI	Date 3/11/08

Approval Recommended by

Signature	Construction Engineer Ben Ghafghazi	Date 3/11/08

Engineer Approval by

Signature	Construction Manager Amer Bata	Date 4/30/08

We the undersigned contractor, have given careful consideration to the change proposed and agree, if this proposal is approved, that we will provide all equipment, furnish the materials, except as may otherwise be noted above, and perform all services necessary for the work above specified, and will accept as full payment therefor the prices shown above.

NOTE: If you, the contractor, do not sign acceptance of this order, your attention is directed to the requirements of the specifications as to proceeding with the ordered work and filing a written protest within the time therein specified.

Contractor Acceptance by

Signature	(Print name and title) EDMUNDO A. PUCHI, TREASURER	Date 4/22/08

STATE OF CALIFORNIA - DEPARTMENT OF TRANSPORTATION

CONTRACT CHANGE ORDER MEMORANDUM

DATE: 5/14/2008 Page 1 of 1

TO: AMER BATA / BEN GHAFGHAZI	FILE: E.A. 04 - 0120L4
FROM: BEN GHAFGHAZI	CO-RTE-PM ALA-80-1.6/2.7
	FED. NO. NO FED AID
CCO#: 17 SUPPLEMENT#: 2 Category Code: CXSA	CONTINGENCY BALANCE (incl. this change) $14,969,003.10
COST: $26,444.00 INCREASE ☑ DECREASE ☐	HEADQUARTERS APPROVAL REQUIRED? ☐ YES ☑ NO
SUPPLEMENTAL FUNDS PROVIDED: $0.00	IS THIS REQUEST IN ACCORDANCE WITH ENVIRONMENTAL DOCUMENTS? ☑ YES ☐ NO
CCO DESCRIPTION: PMIV Licenses	**PROJECT DESCRIPTION:** Construct bridge, roadway, building and electrical system.

Original Contract Time:	Time Adj. This Change:	Previously Approved CCO Time Adjustments:	Percentage Time Adjusted: (including this change)	Total # of Unreconciled Deferred Time CCO(s): (including this change)
810 Day(s)	0 Day(s)	0 Day(s)	0 %	3

THIS CHANGE ORDER PROVIDES FOR:

Provide additional Document Management Software in accordance with Section 10-1.17, "Document Management System," subsection "Schedule of Values," of the Special Provisions.

Ten additional DMS Software and 20 Client Software Maintenance fees are needed for Caltrans use. The contract estimated 25 users from Caltrans. CCO 17 increased users to 50 for additional field staff and METS. CCO 17-1 further increased this to 75. An additional 10 users will be added due to a further increase in field staff. It was incorrectly noted in memos for CCO 17 and 17-1 that the original contract was for 50 users. This work will be paid as extra work at agreed unit prices based on the Contractor's Schedule of Values as follows:

Document Management System Software. . . . . 10 each @ $1,905.20 = $19,052.00
Software Maintenance. . . . . 20 each @ $ 369.60 = $ 7,392.00

The work of this CCO can be financed from the contingency fund. A cost analysis is on file.

No adjustment of contract time is warranted, as this change does not affect the controlling operation.

Design and Maintenance concurrence is not required since this CCO is for administrative purposes only.

CONCURRED BY:		
Construction Engineer:	Ben Ghafghazi	Date 5/15/08
Bridge Engineer:		Date
Project Engineer:		Date
Project Manager:		Date
FHWA Rep.:		Date
Environmental:		Date
Other (specify):		Date
Other (specify):		Date
District Prior Approval By:		Date
HQ (Issue Approve) By:		Date
Resident Engineer's Signature:		Date 5/15/08

ESTIMATE OF COST

	THIS REQUEST	TOTAL TO DATE
ITEMS	$0.00	$0.00
FORCE ACCOUNT	$0.00	$7,500.00
AGREED PRICE	$26,444.00	$158,664.00
ADJUSTMENT	$0.00	$0.00
TOTAL	$26,444.00	$166,164.00

FEDERAL PARTICIPATION

☐ PARTICIPATING ☐ PARTICIPATING IN PART ☒ NONE
☐ NON-PARTICIPATING (MAINTENANCE) ☐ NON-PARTICIPATING

FEDERAL SEGREGATION (if more than one Funding Source or P.I.P. type)
☐ CCO FUNDED PER CONTRACT ☐ CCO FUNDED AS FOLLOWS

FEDERAL FUNDING SOURCE	PERCENT

ADA Notice: For individuals with sensory disabilities, this document is available in alternate formats. For information call: (916) 654-6410 or TDD (916) 654-3880 or write Records and Forms Management, 1120 N Street, MS-89, Sacramento, CA 95814.

STATE OF CALIFORNIA - DEPARTMENT OF TRANSPORTATION

CONTRACT CHANGE ORDER

Change Requested by: Engineer

CCO 17	Suppl. No. 2	Contract No. 04 - 0120L4	Road ALA-80-1.6/2.7	FED. AID LOC.: NO FED AID

T[illegible] M C M CONSTRUCTION INC

You are directed to make the following changes from the plans and specifications or do the following described work not included in the plans and specifications for this contract. ***NOTE: This change order is not effective until approved by the Engineer.***

Description of work to be done, estimate of quantities and prices to be paid. (Segregate between additional work at contract price, agreed price and force account.) Unless otherwise stated, rates for rental of equipment cover only such time as equipment is actually used and no allowance will be made for idle time. This last percentage shown is the net accumulated increase or decrease from the original quantity in the Engineer's Estimate.

Extra Work at Unit Price:

Provide 10 Client DMS Software and 20 Client Software Maintenance fees.

Document Management System Software. . . . . 10 each @ $1,905.20 = $19,052.00
Software Maintenance. . . . . 20 each @ $ 369.60 = $ 7,392.00

The above unit prices constitute full compensation, including all markups, for the work of this change.

Estimated cost of Extra Work at Agreed Unit Price $26,444.00

Estimated Cost: Increase ☑ Decrease ☐ $26,444.00

By reason of this order the time of completion will be adjusted as follows: 0 days

Submitted by		
Signature	Resident Engineer BEN GHAFGHAZI	Date 5/15/08
Approval Recommended by		
Signature	Construction Engineer Ben Ghafghazi	Date 5/15/08
Engineer Approval by		
Signature	Construction Manager Amer Bata	Date 5/22/08

We the undersigned contractor, have given careful consideration to the change proposed and agree, if this proposal is approved, that we will provide all equipment, furnish the materials, except as may otherwise be noted above, and perform all services necessary for the work above specified, and will accept as full payment therefor the prices shown above.

NOTE: If you, the contractor, do not sign acceptance of this order, your attention is directed to the requirements of the specifications as to proceeding with the ordered work and filing a written protest within the time therein specified.

Contractor Acceptance by		
Signature	(Print name and title) HARRY McGOVERN GENERAL MGR.	Date 5/20/08

STATE OF CALIFORNIA - DEPARTMENT OF TRANSPORTATION

CONTRACT CHANGE ORDER

Change Requested by: Engineer

CCO 18	Suppl. No. 0	Contract No. 04 - 0120L4	Road ALA-80-1.6/2.7	FED. AID LOC.: NO FED AID

To: M C M CONSTRUCTION INC

You are directed to make the following changes from the plans and specifications or do the following described work not included in the plans and specifications for this contract. ***NOTE: This change order is not effective until approved by the Engineer.***

Description of work to be done, estimate of quantities and prices to be paid. (Segregate between additional work at contract price, agreed price and force account.) Unless otherwise stated, rates for rental of equipment cover only such time as equipment is actually used and no allowance will be made for idle time. This last percentage shown is the net accumulated increase or decrease from the original quantity in the Engineer's Estimate.

Adjust Item #180, "Call Box System," for deletion of call boxes as shown below.

Adjustment of Compensation at Lump Sum:

The following call boxes shown on Sheets E-170 and E-171 shall be eliminated:

Westbound:

CB-156A
CB-156B
CB-158A
CB-158B
CB-160A

Eastbound: BLA 6/25/08 6/25/08

CB-~~265A~~ 256 A
CB-256B

For eliminating this work the Contractor will credit the State $2,208.00.

~~Estimated~~ Cost of Adjustment of Compensation at Lump Sum .....($2,208.00)

Estimated Cost: Increase ☐ Decrease ☑ ($2,208.00)

By reason of this order the time of completion will be adjusted as follows: 0 days

Submitted by		
Signature	Resident Engineer BEN GHAFGHAZI	Date 11/26/07
Approval Recommended by		
Signature	Construction Engineer Ben Ghafghazi	Date 11/26/07
Engineer Approval by		
Signature	Construction Engineer Amer Bata ~~Ben Ghafghazi~~	Date 06/18/08

We the undersigned contractor, have given careful consideration to the change proposed and agree, if this proposal is approved, that we will provide all equipment, furnish the materials, except as may otherwise be noted above, and perform all services necessary for the work above specified, and will accept as full payment therefor the prices shown above.

NOTE: If you, the contractor, do not sign acceptance of this order, your attention is directed to the requirements of the specifications as to proceeding with the ordered work and filing a written protest within the time therein specified.

Contractor Acceptance by		
Signature	(Print name and title) Edmundo A. Ruchi Treasurer	Date 6-11-08

STATE OF CALIFORNIA - DEPARTMENT OF TRANSPORTATION

CONTRACT CHANGE ORDER MEMORANDUM

TO: AMER BATA / BEN GHAFGHAZI	FILE: **E.A.** 04 - 0120L4
FROM: BEN GHAFGHAZI	**CO-RTE-PM** ALA-80-1.6/2.7
	FED. NO. NO FED AID
CCO#: **18** SUPPLEMENT#: **0** Category Code: **CBPC**	CONTINGENCY BALANCE (incl. this change) **$14,279,228.70**
COST: **($2,208.00)** INCREASE ☐ DECREASE ☑	HEADQUARTERS APPROVAL REQUIRED? ☐ YES ☑ NO
SUPPLEMENTAL FUNDS PROVIDED: **$0.00**	IS THIS REQUEST IN ACCORDANCE WITH ENVIRONMENTAL DOCUMENTS? ☑ YES ☐ NO
CCO DESCRIPTION: Delete Call Boxes	**PROJECT DESCRIPTION:** Construct bridge, roadway, building and electrical system.

Original Contract Time:	Time Adj. This Change:	Previously Approved CCO Time Adjustments:	Percentage Time Adjusted: (including this change)	Total # of Unreconciled Deferred Time CCO(s): (including this change)
810 Day(s)	**0** Day(s)	**0** Day(s)	**0** %	**5**

THIS CHANGE ORDER PROVIDES FOR:

Elimination of the following call boxes shown on Sheets E-170 and E-171:

Westbound:

CB-156A
CB-156B
CB-158A
CB-158B
CB-160A

Eastbound:

CB-256A
CB-256B

The above call boxes are being eliminated because distance between call boxes has been increased. This is due to less frequent usage of call boxes as a result of increased cell phone usage. This CCO is part of an overall change to the New East Span to reduce the number of call boxes on the entire bridge. The spacing is in accordance with MTC guidelines.

For eliminating this work the Contractor will credit the State $2,208.00, which will be returned to the contingency fund. A cost analysis is on file.

This change was requested by Steven Hulsebus, Toll Bridge Design Chief, and discuss and concurred with Jaime Gutierrez, Project Engineer. Peter Lee of Bay Area Toll Authority has concurred with this change for all New East Span projects.

No adjustment of contract time is warranted as this change does not affect the controlling operation.

ADA Notice: For individuals with sensory disabilities, this document is available in alternate formats. For information call: (916) 654-6410 or TDD (916) 654-3880 or write Records and Forms Management, 1120 N Street, MS-89, Sacramento, CA 95814.

CONCURRED BY:		
Construction Engineer:	Ben Ghafghazi	Date 6/27/08
Bridge Engineer:		Date
Project Engineer:	Jaime Gutierrez	Date 10/24/07
Project Manager:		Date
FHWA Rep.:		Date
Environmental:		Date
Other (specify):	Steve Hulsebus, Toll Bridge Desig	Date 10/24/07
Other (specify):	Peter Lee, BATA	Date 2/26/07
District Prior Approval By:		Date
HQ (Issue Approve) By:		Date
Resident Engineer's Signature:		Date 6/27/08

ESTIMATE OF COST

	THIS REQUEST	TOTAL TO DATE
ITEMS	$0.00	$0.00
FORCE ACCOUNT	$0.00	$0.00
AGREED PRICE	$0.00	$0.00
ADJUSTMENT	($2,208.00)	($2,208.00)
TOTAL	($2,208.00)	($2,208.00)

FEDERAL PARTICIPATION

☐ PARTICIPATING ☐ PARTICIPATING IN PART ☐ NONE
☐ NON-PARTICIPATING (MAINTENANCE) ☐ NON-PARTICIPATING

FEDERAL SEGREGATION (if more than one Funding Source or P.I.P. type)
☑ CCO FUNDED PER CONTRACT ☐ CCO FUNDED AS FOLLOWS

FEDERAL FUNDING SOURCE	PERCENT

ADA Notice: For individuals with sensory disabilities, this document is available in alternate formats. For information call: (916) 654-6410 or TDD (916) 654-3880 or write Records and Forms Management, 1120 N Street, MS-89, Sacramento, CA 95814.

STATE OF CALIFORNIA - DEPARTMENT OF TRANSPORTATION

CONTRACT CHANGE ORDER

Change Requested by: Engineer

CCO 20	Suppl. No. 0	Contract No. 04 - 0120L4	Road ALA-80-1.6/2.7	FED. AID LOC.: NO FED AID

To: **M C M CONSTRUCTION INC**

You are directed to make the following changes from the plans and specifications or do the following described work not included in the plans and specifications for this contract. ***NOTE: This change order is not effective until approved by the Engineer.***

Description of work to be done, estimate of quantities and prices to be paid. (Segregate between additional work at contract price, agreed price and force account.) Unless otherwise stated, rates for rental of equipment cover only such time as equipment is actually used and no allowance will be made for idle time. This last percentage shown is the net accumulated increase or decrease from the original quantity in the Engineer's Estimate.

Extra Work at Force Account:

Provide and install oil containment booms in San Francisco Bay from Emeryville Crescent to the foot of the Bay Bridge. Exact locations to be determined by the Engineer in the field.

Estimated cost of Extra Work at Force Account $125,000.00

Estimated Cost: Increase ☑ Decrease ☐ $125,000.00

By reason of this order the time of completion will be adjusted as follows: 0 days

Submitted by		
Signature	Resident Engineer BEN GHAFGHAZI	Date 12/12/07
Approval Recommended by		
Signature	Construction Engineer Ben Ghafghazi	Date 12/12/07
Engineer Approval by		
Signature	Construction Manager Amer Bata	Date 12/12/07

We the undersigned contractor, have given careful consideration to the change proposed and agree, if this proposal is approved, that we will provide all equipment, furnish the materials, except as may otherwise be noted above, and perform all services necessary for the work above specified, and will accept as full payment therefor the prices shown above.

NOTE: If you, the contractor, do not sign acceptance of this order, your attention is directed to the requirements of the specifications as to proceeding with the ordered work and filing a written protest within the time therein specified.

Contractor Acceptance by		
Signature	(Print name and title) Edmundo A. Ruiz, Treasurer	Date 12-12-2007

STATE OF CALIFORNIA - DEPARTMENT OF TRANSPORTATION

CONTRACT CHANGE ORDER MEMORANDUM

TO: AMER BATA / BEN GHAFGHAZI	FILE: E.A. 04 - 0120L4
FROM: BEN GHAFGHAZI	CO-RTE-PM ALA-80-1.6/2.7
	FED. NO. NO FED AID
CCO#: 20 SUPPLEMENT#: 0 Category Code: CXXX	CONTINGENCY BALANCE (incl. this change) **$17,876,284.84**
COST: **$125,000.00** INCREASE ☑ DECREASE ☐	HEADQUARTERS APPROVAL REQUIRED? ☐ YES ☑ NO
SUPPLEMENTAL FUNDS PROVIDED: **$0.00**	IS THIS REQUEST IN ACCORDANCE WITH ENVIRONMENTAL DOCUMENTS? ☑ YES ☐ NO
CCO DESCRIPTION: Provide and install oil booms	**PROJECT DESCRIPTION:** Construct bridge, roadway, building and electrical system.

Original Contract Time:	Time Adj. This Change:	Previously Approved CCO Time Adjustments:	Percentage Time Adjusted: (including this change)	Total # of Unreconciled Deferred Time CCO(s): (including this change)
810 Day(s)	0 Day(s)	0 Day(s)	0 %	0

THIS CHANGE ORDER PROVIDES FOR:

Providing and installing oil containment booms in San Francisco Bay from Emeryville Crescent to the foot of the Bay Bridge. Exact locations to be determined in the field.

This change is necessary to protect Bay shore from oil contamination from oil spill from Cosco Busan container ship. The ship collided with the West Span of the Bay Bridge on November 7, 2007, resulting in the release of approximately 220,000 liters of oil.

This work is not covered by any contract items, therefore, payment for this work will be at Extra Work at Force Account for an estimated cost of $125,000.00, which can be financed from the contingency fund.

Design and Maintenance concurrence is not necessary since this work is temporary.

CONCURRED BY:

Construction Engineer:	Ben Ghafghazi	Date 12/12/07
Bridge Engineer:		Date
Project Engineer:		Date
Project Manager:		Date
FHWA Rep.:		Date
Environmental:		Date
Other (specify):		Date
Other (specify):		Date
District Prior Approval By:		Date
HQ (Issue Approve) By:		Date
Resident Engineer's Signature:		Date 12/12/07

ESTIMATE OF COST

	THIS REQUEST	TOTAL TO DATE
ITEMS	$0.00	$0.00
FORCE ACCOUNT	$125,000.00	$125,000.00
AGREED PRICE	$0.00	$0.00
ADJUSTMENT	$0.00	$0.00
TOTAL	$125,000.00	$125,000.00

FEDERAL PARTICIPATION

☐ PARTICIPATING ☐ PARTICIPATING IN PART ☑ NONE
☐ NON-PARTICIPATING (MAINTENANCE) ☐ NON-PARTICIPATING

FEDERAL SEGREGATION (if more than one Funding Source or P.I.P. type)
☐ CCO FUNDED PER CONTRACT ☑ CCO FUNDED AS FOLLOWS

FEDERAL FUNDING SOURCE	PERCENT

ADA Notice: For individuals with sensory disabilities, this document is available in alternate formats. For information call: (916) 654-6410 or TDD (916) 654-3880 or write Records and Forms Management, 1120 N Street, MS-89, Sacramento, CA 95814.

STATE OF CALIFORNIA - DEPARTMENT OF TRANSPORTATION

CONTRACT CHANGE ORDER MEMORANDUM

DATE: 1/15/2008 Page 1 of 1

TO: AMER BATA / BEN GHAFGHAZI

FROM: BEN GHAFGHAZI

FILE: E.A. 04 - 0120L4
CO-RTE-PM ALA-80-1.6/2.7
FED. NO. NO FED AID

CCO#: 20 | SUPPLEMENT#: 1 | Category Code: CXXX

CONTINGENCY BALANCE (incl. this change) $17,075,004.84

COST: $70,000.00 INCREASE ☑ DECREASE ☐

HEADQUARTERS APPROVAL REQUIRED? ☐ YES ☑ NO

SUPPLEMENTAL FUNDS PROVIDED: $0.00

IS THIS REQUEST IN ACCORDANCE WITH ENVIRONMENTAL DOCUMENTS? ☑ YES ☐ NO

CCO DESCRIPTION:
Provide and install oil booms

PROJECT DESCRIPTION:
Construct bridge, roadway, building and electrical system.

Original Contract Time:	Time Adj. This Change:	Previously Approved CCO Time Adjustments:	Percentage Time Adjusted: (including this change)	Total # of Unreconciled Deferred Time CCO(s): (including this change)
810 Day(s)	0 Day(s)	0 Day(s)	0 %	0

THIS CHANGE ORDER PROVIDES FOR:

Additional funds for providing and installing oil containment booms in San Francisco Bay from Emeryville Crescent to the foot of the Bay Bridge. Exact locations to be determined in the field.

This change is necessary to protect Bay shore from oil contamination from oil spill from Cosco Busan container ship. The ship collided with the West Span of the Bay Bridge on November 7, 2007, resulting in the release of approximately 220,000 liters of oil.

Additional funds are required for this work. At the time the original CCO was written the extent of work was not known. Since that time the work has been completed. This CCO will provide the additional funds needed to pay for the work. This work is not covered by any contract items, therefore, payment for this work will be at Extra Work at Force Account for an estimated cost of $70,000.00, which can be financed from the contingency fund.

Design and Maintenance concurrence is not necessary since this work is temporary.

CONCURRED BY:

Construction Engineer:	Ben Ghafghazi	Date 1/15/08
Bridge Engineer:		Date
Project Engineer:		Date
Project Manager:		Date
FHWA Rep.:		Date
Environmental:		Date
Other (specify):		Date
Other (specify):		Date
District Prior Approval By:		Date
HQ (Issue Approve) By:		Date
Resident Engineer's Signature:		Date 1/15/08

ESTIMATE OF COST

	THIS REQUEST	TOTAL TO DATE
ITEMS	$0.00	$0.00
FORCE ACCOUNT	$70,000.00	$195,000.00
AGREED PRICE	$0.00	$0.00
ADJUSTMENT	$0.00	$0.00
TOTAL	$70,000.00	$195,000.00

FEDERAL PARTICIPATION

☐ PARTICIPATING ☐ PARTICIPATING IN PART ☑ NONE
☐ NON-PARTICIPATING (MAINTENANCE) ☐ NON-PARTICIPATING

FEDERAL SEGREGATION (if more than one Funding Source or P.I.P. type)
☑ CCO FUNDED PER CONTRACT ☐ CCO FUNDED AS FOLLOWS

FEDERAL FUNDING SOURCE	PERCENT

ADA Notice: For individuals with sensory disabilities, this document is available in alternate formats. For information call: (916) 654-6410 or TDD (916) 654-3880 or write Records and Forms Management, 1120 N Street, MS-89, Sacramento, CA 95814.

CONTRACT CHANGE ORDER

Change Requested by: Engineer

CCO 20	Suppl. No. 1	Contract No. 04 - 0120L4	Road ALA-80-1.6/2.7	FED. AID LOC.: NO FED AID

To: **M C M CONSTRUCTION INC**

You are directed to make the following changes from the plans and specifications or do the following described work not included in the plans and specifications for this contract. ***NOTE: This change order is not effective until approved by the Engineer.***

Description of work to be done, estimate of quantities and prices to be paid. (Segregate between additional work at contract price, agreed price and force account.) Unless otherwise stated, rates for rental of equipment cover only such time as equipment is actually used and no allowance will be made for idle time. This last percentage shown is the net accumulated increase or decrease from the original quantity in the Engineer's Estimate.

Extra Work at Force Account:

Additional funds to provide and install oil containment booms in San Francisco Bay from Emeryville Crescent to the foot of the Bay Bridge. Exact locations to be determined by the Engineer in the field.

Estimated cost of Extra Work at Force Account $70,000.00

Estimated Cost: Increase ☑ **Decrease** ☐ **$70,000.00**

By reason of this order the time of completion will be adjusted as follows: 0 days

Submitted by

Signature	Resident Engineer BEN GHAFGHAZI	Date 1/15/08

Approval Recommended by

Signature	Construction Engineer Ben Ghafghazi	Date 1/15/08

Engineer Approval by

Signature	Construction Manager Amer Bata	Date 1/15/08

We the undersigned contractor, have given careful consideration to the change proposed and agree, if this proposal is approved, that we will provide all equipment, furnish the materials, except as may otherwise be noted above, and perform all services necessary for the work above specified, and will accept as full payment therefor the prices shown above.

NOTE: If you, the contractor, do not sign acceptance of this order, your attention is directed to the requirements of the specifications as to proceeding with the ordered work and filing a written protest within the time therein specified.

Contractor Acceptance by

Signature Not Required	(Print name and title)	Date

STATE OF CALIFORNIA - DEPARTMENT OF TRANSPORTATION

CONTRACT CHANGE ORDER MEMORANDUM

DATE: 5/15/2008 Page 1 of 1

TO: AMER BATA / BEN GHAFGHAZI

FROM: BEN GHAFGHAZI

FILE: E.A. 04 - 0120L4
CO-RTE-PM ALA-80-1.6/2.7
FED. NO. NO FED AID

CCO#: 20 SUPPLEMENT#: 2 Category Code: CXXX

CONTINGENCY BALANCE (incl. this change) **$14,959,836.10**

COST: **$20,000.00** INCREASE ☑ DECREASE ☐

HEADQUARTERS APPROVAL REQUIRED? ☑ YES ☐ NO

SUPPLEMENTAL FUNDS PROVIDED: **$0.00**

IS THIS REQUEST IN ACCORDANCE WITH ENVIRONMENTAL DOCUMENTS? ☑ YES ☐ NO

CCO DESCRIPTION:
Provide and install oil booms

PROJECT DESCRIPTION:
Construct bridge, roadway, building and electrical system.

Original Contract Time:	Time Adj. This Change:	Previously Approved CCO Time Adjustments:	Percentage Time Adjusted: (including this change)	Total # of Unreconciled Deferred Time CCO(s): (including this change)
810 Day(s)	0 Day(s)	0 Day(s)	0 %	3

THIS CHANGE ORDER PROVIDES FOR:
Additional funds for providing and installing oil containment booms in San Francisco Bay from Emeryville Crescent to the foot of the Bay Bridge. Exact locations to be determined in the field.

This change is necessary to protect Bay shore from oil contamination from oil spill from Cosco Busan container ship. The ship collided with the West Span of the Bay Bridge on November 7, 2007, resulting in the release of approximately 220,000 liters of oil. This work was directed by Tony Anziano, Toll Program Manager, on November 7, 2007.

Additional funds are required for this work. At the time the original CCO was written the extent of the work was not known. Since that time the work has been completed. Supplement 1 for $70,000.00 was issued to pay for known extra work bills at the time. Since then additional EWB's have been submitted which exceed the amount of the supplement. This CCO will provide the additional funds needed to pay the remaining outstanding EWB's. This work is not covered by any contract items, therefore, payment for this work will be at Extra Work at Force Account for an estimated cost of $20,000.00, which can be financed from the contingency fund. Caltrans is currently pursuing reimbursement of costs from the shipping company's insurance.

This change has been discussed and concurred with Mike Forner, Principal Transportation Engineer, SFOBB, Patrick Treacy, Headquarters Construction Coordinator, and Ken Terpstra, Project Manager. Design and Maintenance concurrence is not necessary since this work is temporary. An Issue and Approve was received from Ken Darby on June 3, 2008.

No adjustment of contract time is warranted, as this change does not affect the controlling operation.

CONCURRED BY:

Construction Engineer:	Ben Ghafghazi	Date	6/3/08
Bridge Engineer:		Date	
Project Engineer:		Date	
Project Manager:	Ken Terprstra	Date	5/30/08
FHWA Rep.:		Date	
Environmental:		Date	
Other (specify):	Tony Anziano, Toll Prog. Manager	Date	11/7/07
Other (specify):	Patrick Treacy, HQ Const. Coord.	Date	5/20/08
District Prior Approval By:	Mike Forner, Principal TE	Date	5/16/08
HQ (Issue Approve) By:	Ken Darby	Date	6/3/08
Resident Engineer's Signature:		Date	6/3/08

ESTIMATE OF COST

	THIS REQUEST	TOTAL TO DATE
ITEMS	$0.00	$0.00
FORCE ACCOUNT	$20,000.00	$215,000.00
AGREED PRICE	$0.00	$0.00
ADJUSTMENT	$0.00	$0.00
TOTAL	$20,000.00	$215,000.00

FEDERAL PARTICIPATION

☐ PARTICIPATING ☐ PARTICIPATING IN PART ☑ NONE
☐ NON-PARTICIPATING (MAINTENANCE) ☐ NON-PARTICIPATING

FEDERAL SEGREGATION (if more than one Funding Source or P.I.P. type)
☑ CCO FUNDED PER CONTRACT ☐ CCO FUNDED AS FOLLOWS

FEDERAL FUNDING SOURCE	PERCENT

ADA Notice: For individuals with sensory disabilities, this document is available in alternate formats. For information call: (918) 654-6410 or TDD (916) 654-3880 or write Records and Forms Management, 1120 N Street, MS-89, Sacramento, CA 95814.

STATE OF CALIFORNIA - DEPARTMENT OF TRANSPORTATION

CONTRACT CHANGE ORDER

Change Requested by: Engineer

CCO 20	Suppl. No. 2	Contract No. 04 - 0120L4	Road ALA-80-1.6/2.7	FED. AID LOC.: NO FED AID

TO: M C M CONSTRUCTION INC

You are directed to make the following changes from the plans and specifications or do the following described work not included in the plans and specifications for this contract. ***NOTE: This change order is not effective until approved by the Engineer.***

Description of work to be done, estimate of quantities and prices to be paid. (Segregate between additional work at contract price, agreed price and force account.) Unless otherwise stated, rates for rental of equipment cover only such time as equipment is actually used and no allowance will be made for idle time. This last percentage shown is the net accumulated increase or decrease from the original quantity in the Engineer's Estimate.

Extra Work at Force Account:

Additional funds to provide and install oil containment booms in San Francisco Bay from Emeryville Crescent to the foot of the Bay Bridge. Exact locations to be determined by the Engineer in the field.

Estimated cost of Extra Work at Force Account $20,000.00

Estimated Cost: **Increase** ☑ **Decrease** ☐ **$20,000.00**

By reason of this order the time of completion will be adjusted as follows: 0 days

Submitted by

Signature	Resident Engineer BEN GHAFGHAZI	Date 5/22/08

Approval Recommended by

Signature	Construction Manager Amer Bata	Date 5/23/08

Engineer Approval by

Signature	Construction Manager Amer Bata	Date 6/3/08

We the undersigned contractor, have given careful consideration to the change proposed and agree, if this proposal is approved, that we will provide all equipment, furnish the materials, except as may otherwise be noted above, and perform all services necessary for the work above specified, and will accept as full payment therefor the prices shown above.

NOTE: If you, the contractor, do not sign acceptance of this order, your attention is directed to the requirements of the specifications as to proceeding with the ordered work and filing a written protest within the time therein specified.

Contractor Acceptance by

Signature Not Required	(Print name and title)	Date

STATE OF CALIFORNIA - DEPARTMENT OF TRANSPORTATION

CONTRACT CHANGE ORDER

Change Requested by: Engineer

CCO 21	Suppl. No. 0	Contract No. 04 - 0120L4	Road ALA-80-1.6/2.7	FED. AID LOC.: NO FED AID

T[illegible] M C M CONSTRUCTION INC

You are directed to make the following changes from the plans and specifications or do the following described work not included in the plans and specifications for this contract. ***NOTE: This change order is not effective until approved by the Engineer.***

Description of work to be done, estimate of quantities and prices to be paid. (Segregate between additional work at contract price, agreed price and force account.) Unless otherwise stated, rates for rental of equipment cover only such time as equipment is actually used and no allowance will be made for idle time. This last percentage shown is the net accumulated increase or decrease from the original quantity in the Engineer's Estimate.

Extra Work at Lump Sum:

In accordance with Section 10-1.17, "Document Management System," subsection "Schedule of Values," of the Special Provisions, provide Electronic Data Delivery (EDD) and Daily Diary Report (DDR) modules for PMIV as follows:

Description	Unit	Quantity
EDD License	EA	5
DDR License	EA	40
Annual Maintenance for EDD	EA	10
Annual Maintenance for DDR	EA	80
Technical Support	Hrs	240
Training	EA	5
Customization	Hrs	150

For this work the contractor will be paid the sum of $114,809.70. This sum constitutes full compensation, including [illegible]markups, for this change.

Estimated cost of Extra Work at Lump Sum $114,809.70

Estimated Cost: Increase ☑ Decrease ☐ $114,809.70

By reason of this order the time of completion will be adjusted as follows: 0 days

Submitted by

Signature	Resident Engineer BEN GHAFGHAZI	Date 11/26/07

Approval Recommended by

Signature	Construction Engineer Ben Ghafghazi	Date 11/26/07

Engineer Approval by

Signature	Construction Manager Amer Bata	Date 01/14/08

We the undersigned contractor, have given careful consideration to the change proposed and agree, if this proposal is approved, that we will provide all equipment, furnish the materials, except as may otherwise be noted above, and perform all services necessary for the work above specified, and will accept as full payment therefor the prices shown above.

NOTE: If you, the contractor, do not sign acceptance of this order, your attention is directed to the requirements of the specifications as to p[illegible]eeding with the ordered work and filing a written protest within the time therein specified.

Contractor Acceptance by

Signature	(Print name and title) EDMUNDO PUCHI, TREASURER	Date 12/20/07

STATE OF CALIFORNIA - DEPARTMENT OF TRANSPORTATION

CONTRACT CHANGE ORDER MEMORANDUM

DATE: 11/14/2007 Page 1 of 1

TO: AMER BATA / BEN GHAFGHAZI

FROM: BEN GHAFGHAZI

FILE: E.A. 04 - 0120L4
CO-RTE-PM ALA-80-1.6/2.7
FED. NO. NO FED AID

CCO#: 21 | SUPPLEMENT#: 0 | Category Code: CXSA

CONTINGENCY BALANCE (incl. this change) $18,091,276.84

COST: $114,809.70 INCREASE ☑ DECREASE ☐

HEADQUARTERS APPROVAL REQUIRED? ☐ YES ☑ NO

SUPPLEMENTAL FUNDS PROVIDED: $0.00

IS THIS REQUEST IN ACCORDANCE WITH ENVIRONMENTAL DOCUMENTS? ☑ YES ☐ NO

CCO DESCRIPTION:
PMIV Diary

PROJECT DESCRIPTION:
Construct bridge, roadway, building and electrical system.

Original Contract Time:	Time Adj. This Change:	Previously Approved CCO Time Adjustments:	Percentage Time Adjusted: (including this change)	Total # of Unreconciled Deferred Time CCO(s): (including this change)
810 Day(s)	0 Day(s)	0 Day(s)	0 %	0

THIS CHANGE ORDER PROVIDES FOR:
Adding Electronic Data Delivery (EDD) and Daily Diary Report (DDR) modules for PMIV as shown on the CCO.

Item #3, Electronic Mobile Daily Diary (EMDD), requires the Contractor to submit labor and equipment each month for the EMDD item. EMDD is no longer available through District 4. EMDD is required to provide a means of researching diaries and tracking items of work and extra work. Since EMDD is not being provided by the District, it will be added to the contract as a CCO. Providing this service though PMIV allows full integration of the daily diaries with other project documents and will provide a useful tool for analyzing costs and resolving issues. Section 10-1.17, "Document Management System," subsection, "Schedule of Values," of the Special Provisions allows changes to be made to the Document Management System and specifies payment as extra work in accordance with Section 4-1.03D,"Extra Work," of the Standard Specifications.

The work will be paid as extra work at lump sum for an price of $114,809.70, which can be financed for the contingency fund.

Design an Maintenance concurrence is not needed since this CCO is for contract administration only.

CONCURRED BY:

Construction Engineer:	Ben Ghafghazi	Date 11/26/07
Bridge Engineer:		Date
Project Engineer:		Date
Project Manager:		Date
FHWA Rep.:		Date
Environmental:		Date
Other (specify):		Date
Other (specify):		Date
District Prior Approval By:		Date
HQ (Issue Approve) By:		Date
Resident Engineer's Signature:		Date 11/26/07

ESTIMATE OF COST

	THIS REQUEST	TOTAL TO DATE
ITEMS	$0.00	$0.00
FORCE ACCOUNT	$0.00	$0.00
AGREED PRICE	$114,809.70	$114,809.70
ADJUSTMENT	$0.00	$0.00
TOTAL	$114,809.70	$114,809.70

FEDERAL PARTICIPATION

☐ PARTICIPATING ☐ PARTICIPATING IN PART ☑ NONE
☐ NON-PARTICIPATING (MAINTENANCE) ☐ NON-PARTICIPATING

FEDERAL SEGREGATION (if more than one Funding Source or P.I.P. type)
☑ CCO FUNDED PER CONTRACT ☐ CCO FUNDED AS FOLLOWS

FEDERAL FUNDING SOURCE	PERCENT

ADA Notice: For individuals with sensory disabilities, this document is available in alternate formats. For information call: (916) 654-6410 or TDD (916) 654-3880 or write Records and Forms Management, 1120 N Street, MS-89, Sacramento, CA 95814.

STATE OF CALIFORNIA - DEPARTMENT OF TRANSPORTATION

CONTRACT CHANGE ORDER MEMORANDUM

DATE: 5/21/2008 Page 1 of 1

TO: AMER BATA / BEN GHAFGHAZI	FILE: E.A. 04 - 0120L4
FROM: BEN GHAFGHAZI	CO-RTE-PM ALA-80-1.6/2.7
	FED. NO. NO FED AID
CCO#: 21 SUPPLEMENT#: 1 Category Code: ~~CXSA~~ AX22	CONTINGENCY BALANCE (incl. this change) $14,871,263.10
COST: $19,411.37 INCREASE ☑ DECREASE ☐	HEADQUARTERS APPROVAL REQUIRED? ☐ YES ☑ NO
SUPPLEMENTAL FUNDS PROVIDED: $0.00	IS THIS REQUEST IN ACCORDANCE WITH ENVIRONMENTAL DOCUMENTS? ☑ YES ☐ NO
CCO DESCRIPTION: PMIV Diary	**PROJECT DESCRIPTION:** Construct bridge, roadway, building and electrical system.

Original Contract Time:	Time Adj. This Change:	Previously Approved CCO Time Adjustments:	Percentage Time Adjusted: (including this change)	Total # of Unreconciled Deferred Time CCO(s): (including this change)
810 Day(s)	0 Day(s)	0 Day(s)	0 %	3

THIS CHANGE ORDER PROVIDES FOR:

Adding ten Daily Diary Report (DDR) modules for PMIV as shown on the CCO.

CCO #21 was written to add Electronic Mobile Daily Diary (EMDD) to the contract. CCO #21 provided forty DDR modules. Ten are being added due to staff increases since the time CCO #21 was issued. These modules are being added in accordance with Section 10-1.17, "Document Management System," subsection, "Schedule of Values," of the Special Provisions. Section 10-1.17 specifies payment as extra work in accordance with Section 4-1.03D,"Extra Work," of the Standard Specifications.

This work will be paid as extra work at lump sum of $19,411.37, which can be financed for the contingency fund.

Design and Maintenance concurrence is not needed since this CCO is for contract administration only.

No adjustment of contract time is warranted, as this change does not affect the controlling operation.
No

CONCURRED BY:		
Construction Engineer:	Ben Ghafghazi	Date 5/21/08
Bridge Engineer:		Date
Project Engineer:		Date
Project Manager:		Date
FHWA Rep.:		Date
Environmental:		Date
Other (specify):		Date
Other (specify):		Date
District Prior Approval By:		Date
HQ (Issue Approve) By:		Date
Resident Engineer's Signature:		Date 5/21/08

ESTIMATE OF COST

	THIS REQUEST	TOTAL TO DATE
ITEMS	$0.00	$0.00
FORCE ACCOUNT	$0.00	$0.00
AGREED PRICE	$19,411.37	$134,221.07
ADJUSTMENT	$0.00	$0.00
TOTAL	$19,411.37	$134,221.07

FEDERAL PARTICIPATION

☐ PARTICIPATING ☐ PARTICIPATING IN PART ☑ NONE
☐ NON-PARTICIPATING (MAINTENANCE) ☐ NON-PARTICIPATING

FEDERAL SEGREGATION (if more than one Funding Source or P.I.P. type)
☑ CCO FUNDED PER CONTRACT ☐ CCO FUNDED AS FOLLOWS

FEDERAL FUNDING SOURCE	PERCENT

ADA Notice: For individuals with sensory disabilities, this document is available in alternate formats. For information call: (916) 654-6410 or TDD (916) 654-3880 or write Records and Forms Management, 1120 N Street, MS-89, Sacramento, CA 95814.

STATE OF CALIFORNIA - DEPARTMENT OF TRANSPORTATION

CONTRACT CHANGE ORDER

Change Requested by: Engineer

CCO 21	Suppl. No. 1	Contract No. 04 - 0120L4	Road ALA-80-1.6/2.7	FED. AID LOC.: NO FED AID

M C M CONSTRUCTION INC

You are directed to make the following changes from the plans and specifications or do the following described work not included in the plans and specifications for this contract. ***NOTE: This change order is not effective until approved by the Engineer.***

Description of work to be done, estimate of quantities and prices to be paid. (Segregate between additional work at contract price, agreed price and force account.) Unless otherwise stated, rates for rental of equipment cover only such time as equipment is actually used and no allowance will be made for idle time. This last percentage shown is the net accumulated increase or decrease from the original quantity in the Engineer's Estimate.

Extra Work at Lump Sum:

In accordance with Section 10-1.17, "Document Management System," subsection "Schedule of Values," of the Special Provisions, provide Electronic Data Delivery (EDD) and Daily Diary Report (DDR) modules for PMIV as follows:

Description	Unit	Quantity
DDR License	EA	10
Annual Maintenance for DDR	EA	20
Technical Support	Hrs	40
Training	EA	2

For this work the contractor will be paid the sum of $19,411.37. This sum constitutes full compensation, including markups for this change.

~~Estimated~~ Total cost of Extra Work at Lump Sum $19,411.37

Estimated Cost: Increase ☑ **Decrease** ☐ **$19,411.37**

By reason of this order the time of completion will be adjusted as follows: 0 days

Submitted by

Signature	Resident Engineer BEN GHAFGHAZI	Date 5/21/08

Approval Recommended by

Signature	Construction Engineer Ben Ghafghazi	Date 5/21/08

Engineer Approval by

Signature	Construction Manager Amer Bata	Date 6/3/08

We the undersigned contractor, have given careful consideration to the change proposed and agree, if this proposal is approved, that we will provide all equipment, furnish the materials, except as may otherwise be noted above, and perform all services necessary for the work above specified, and will accept as full payment therefor the prices shown above.

NOTE: If you, the contractor, do not sign acceptance of this order, your attention is directed to the requirements of the specifications as to proceeding with the ordered work and filing a written protest within the time therein specified.

Contractor Acceptance by

Signature	(Print name and title) EDMUNDO A. TUCHI, TREASURER	Date 5/30/08

STATE OF CALIFORNIA - DEPARTMENT OF TRANSPORTATION

CONTRACT CHANGE ORDER MEMORANDUM

DATE: 4/1/2009 Page 1 of 1

TO: AMER BATA / BEN GHAFGHAZI	FILE: **E.A.** 04 - 0120L4
FROM: BEN GHAFGHAZI	**CO-RTE-PM** ALA-80-1.6/2.7
	FED. NO. NO FED AID
CCO#: **21** SUPPLEMENT#: **2** Category Code: **CXSA**	CONTINGENCY BALANCE (incl. this change) **$8,272,720.00**
COST: **$11,235.84** INCREASE ☑ DECREASE ☐	HEADQUARTERS APPROVAL REQUIRED? ☐ YES ☑ NO
SUPPLEMENTAL FUNDS PROVIDED: **$0.00**	IS THIS REQUEST IN ACCORDANCE WITH ENVIRONMENTAL DOCUMENTS? ☑ YES ☐ NO
CCO DESCRIPTION: PMIV Diary.	**PROJECT DESCRIPTION:** Construct bridge, roadway, building and electrical system.

Original Contract Time:	Time Adj. This Change:	Previously Approved CCO Time Adjustments:	Percentage Time Adjusted: (including this change)	Total # of Unreconciled Deferred Time CCO(s): (including this change)
810 Day(s)	**0** Day(s)	**184** Day(s)	**23** %	**11**

THIS CHANGE ORDER PROVIDES FOR:
Adding ten Daily Diary Report (DDR) modules for PMIV as shown on the CCO.

CCO No. 21 was written to add Electronic Mobile Daily Diary (EMDD) to the contract. CCO No. 21 provided forty DDR modules. Supplement 1 was written to add ten DDR modules due to staff increases after CCO No. 21 was issued. Staff has increased further since Supplement 1 and therefore another ten DDR modules will be added on this CCO. These modules are being added in accordance with Section 10-1.17, "Document Management System," subsection, "Schedule of Values," of the Special Provisions. Section 10-1.17 specifies payment as extra work in accordance with Section 4-1.03D,"Extra Work," of the Standard Specifications.

This work will be paid as extra work at lump sum of $11,235.84, which can be financed for the contingency fund.

Design an Maintenance concurrence is not needed since this CCO is for contract administration only.

No adjustment of contract time is warranted, as this change does not affect the controlling operation.

CONCURRED BY:		
Construction Engineer:	Ben Ghafghazi	Date 4/2/09
Bridge Engineer:		Date
Project Engineer:		Date
Project Manager:		Date
FHWA Rep.:		Date
Environmental:		Date
Other (specify):		Date
Other (specify):		Date
District Prior Approval By:		Date
HQ (Issue Approve) By:		Date
Resident Engineer's Signature:		Date 4/2/09

ESTIMATE OF COST

	THIS REQUEST	TOTAL TO DATE
ITEMS	$0.00	$0.00
FORCE ACCOUNT	$0.00	$0.00
AGREED PRICE	$11,235.84	$145,456.91
ADJUSTMENT	$0.00	$0.00
TOTAL	$11,235.84	$145,456.91

FEDERAL PARTICIPATION

☐ PARTICIPATING ☐ PARTICIPATING IN PART ☑ NONE
☐ NON-PARTICIPATING (MAINTENANCE) ☐ NON-PARTICIPATING

FEDERAL SEGREGATION (if more than one Funding Source or P.I.P. type)
☑ CCO FUNDED PER CONTRACT ☐ CCO FUNDED AS FOLLOWS

FEDERAL FUNDING SOURCE	PERCENT

ADA Notice: For individuals with sensory disabilities, this document is available in alternate formats. For information call: (916) 654-6410 or TDD (916) 654-3880 or write Records and Forms Management, 1120 N Street, MS-89, Sacramento, CA 95814.

CONTRACT CHANGE ORDER

Change Requested by: Engineer

CCO 21	Suppl. No. 2	Contract No. 04 - 0120L4	Road ALA-80-1.6/2.7	FED. AID LOC.: NO FED AID

To: **M C M CONSTRUCTION INC**

You are directed to make the following changes from the plans and specifications or do the following described work not included in the plans and specifications for this contract. ***NOTE: This change order is not effective until approved by the Engineer.***

Description of work to be done, estimate of quantities and prices to be paid. (Segregate between additional work at contract price, agreed price and force account.) Unless otherwise stated, rates for rental of equipment cover only such time as equipment is actually used and no allowance will be made for idle time. This last percentage shown is the net accumulated increase or decrease from the original quantity in the Engineer's Estimate.

Extra Work at Lump Sum:

In accordance with Section 10-1.17, "Document Management System," subsection "Schedule of Values," of the Special Provisions, provide Electronic Data Delivery (EDD) and Daily Diary Report (DDR) modules for PMIV as follows:

Description	Unit	Quantity
DDR License	EA	10
Annual Maintenance for DDR	EA	20

For this work the contractor will be paid the sum of $11,235.84. This sum constitutes full compensation, including markups for this change.

Extra Work at Agreed Lump Sum $11,235.84

Estimated Cost: Increase ☑ **Decrease** ☐ **$11,235.84**

By reason of this order the time of completion will be adjusted as follows: 0 days

Submitted by

Signature	Resident Engineer BEN GHAFGHAZI	Date 4/2/09

Approval Recommended by

Signature	Construction Engineer Ben Ghafghazi	Date 4/2/09

Engineer Approval by

Signature	Construction Manager Amer Bata	Date 4/13/09

We the undersigned contractor, have given careful consideration to the change proposed and agree, if this proposal is approved, that we will provide all equipment, furnish the materials, except as may otherwise be noted above, and perform all services necessary for the work above specified, and will accept as full payment therefor the prices shown above.

NOTE: If you, the contractor, do not sign acceptance of this order, your attention is directed to the requirements of the specifications as to proceeding with the ordered work and filing a written protest within the time therein specified.

Contractor Acceptance by

Signature	(Print name and title) EDMUND A. IUCHI, TREASURER	Date 4/7/09

CONTRACT CHANGE ORDER

Change Requested by: Engineer

CCO 22	Suppl. No. 0	Contract No. 04 - 0120L4	Road ALA-80-1.6/2.7	FED. AID LOC.: NO FED AID

To: **M C M CONSTRUCTION INC**

You are directed to make the following changes from the plans and specifications or do the following described work not included in the plans and specifications for this contract. ***NOTE: This change order is not effective until approved by the Engineer.***

Description of work to be done, estimate of quantities and prices to be paid. (Segregate between additional work at contract price, agreed price and force account.) Unless otherwise stated, rates for rental of equipment cover only such time as equipment is actually used and no allowance will be made for idle time. This last percentage shown is the net accumulated increase or decrease from the original quantity in the Engineer's Estimate.

Extra Work at Lump Sum:

Provide labor, material and equipment to install additional conduits, pullboxes, conductors, and miscellaneous other materials per sheets 2 of 4 through 4 of 4 of this CCO. All work shall be in accordance with Section 10-3, "Signals, Lighting and Electrical Systems," of the Special Provisions and Section 86, "Signals, Lighting and Electrical Systems," of the Standard Specification.

For this work, the contractor will be paid the sum of $16,050.00. This sum constitutes full compensation, including markups, for this change.

Estimated cost of Extra Work at Lump Sum $16,050.00

Estimated Cost: Increase ☑ Decrease ☐ $16,050.00

By reason of this order the time of completion will be adjusted as follows: 0 days

Submitted by

Signature	Resident Engineer BEN GHAFGHAZI	Date 11/19/07

Approval Recommended by

Signature	Construction Engineer Ben Ghafghazi	Date 11/19/07

Engineer Approval by

Signature	Construction Engineer Ben Ghafghazi	Date 2/1/08

We the undersigned contractor, have given careful consideration to the change proposed and agree, if this proposal is approved, that we will provide all equipment, furnish the materials, except as may otherwise be noted above, and perform all services necessary for the work above specified, and will accept as full payment therefor the prices shown above.

NOTE: If you, the contractor, do not sign acceptance of this order, your attention is directed to the requirements of the specifications as to proceeding with the ordered work and filing a written protest within the time therein specified.

Contractor Acceptance by

Signature	(Print name and title) EDMUNDO A. PUCHI, TREASURER	Date 1/22/08

STATE OF CALIFORNIA - DEPARTMENT OF TRANSPORTATION

CONTRACT CHANGE ORDER MEMORANDUM

DATE: 11/15/2007 Page 1 of 1

TO: AMER BATA / BEN GHAFGHAZI

FROM: BEN GHAFGHAZI

FILE: E.A. 04 - 0120L4
CO-RTE-PM ALA-80-1.6/2.7
FED. NO. NO FED AID

CCO#: 22	SUPPLEMENT#: 0	Category Code: CBPC	CONTINGENCY BALANCE (incl. this change) $18,206,086.54
COST: $16,050.00	INCREASE ☑ DECREASE ☐		HEADQUARTERS APPROVAL REQUIRED? ☐ YES ☑ NO
SUPPLEMENTAL FUNDS PROVIDED: $16,050.00			IS THIS REQUEST IN ACCORDANCE WITH ENVIRONMENTAL DOCUMENTS? ☑ YES ☐ NO

CCO DESCRIPTION:
Separate 120 and 480 volt conductors

PROJECT DESCRIPTION:
Construct bridge, roadway, building and electrical system.

Original Contract Time:	Time Adj. This Change:	Previously Approved CCO Time Adjustments:	Percentage Time Adjusted: (including this change)	Total # of Unreconciled Deferred Time CCO(s): (including this change)
810 Day(s)	0 Day(s)	0 Day(s)	0 %	0

THIS CHANGE ORDER PROVIDES FOR:
Installing additional conduits, pullboxes, conductors, and miscellaneous other materials per sheets 2 of 4 through 4 of 4 of this CCO. All work shall be in accordance with Section 10-3, "Signals, Lighting and Electrical Systems," of the Special Provisions and Section 86, "Signals, Lighting and Electrical Systems," of the Standard Specification.

This change is necessary to install 120V and 480V condusctors in separate conduits.

This work will be paid as Extra Work at Lump Sum for $16,050.00, which can be financed from the supplemental funds of which $100,000.00 were allotted for this work. A detailed cost analysis is on file.

This CCO was requested by Parviz Boozarpour and Sean Coughlin of Electrical Design. This CCO was concurred with Jaime Gutierrez of Project Development.

No adjustment of contract time is warranted, as this change does not affect the controlling operation.

CONCURRED BY:

Construction Engineer:	Ben Ghafghazi	Date 11/9/07
Bridge Engineer:		Date
Project Engineer:	Jaime Gutierrez	Date 10/23/07
Project Manager:		Date
FHWA Rep.:		Date
Environmental:		Date
Other (specify):	Parviz Boozarpour, Electrical Desig	Date 10/23/07
Other (specify):	Sean Coughlin, Electrical Design	Date 10/23/07
District Prior Approval By:		Date
HQ (Issue Approve) By:		Date
Resident Engineer's Signature:		Date 11/9/07

ESTIMATE OF COST

	THIS REQUEST	TOTAL TO DATE
ITEMS	$0.00	$0.00
FORCE ACCOUNT	$0.00	$0.00
AGREED PRICE	$16,050.00	$16,050.00
ADJUSTMENT	$0.00	$0.00
TOTAL	$16,050.00	$16,050.00

FEDERAL PARTICIPATION

☐ PARTICIPATING ☐ PARTICIPATING IN PART ☑ NONE
☐ NON-PARTICIPATING (MAINTENANCE) ☐ NON-PARTICIPATING

FEDERAL SEGREGATION (if more than one Funding Source or P.I.P. type)
☑ CCO FUNDED PER CONTRACT ☐ CCO FUNDED AS FOLLOWS

FEDERAL FUNDING SOURCE	PERCENT

ADA Notice: For individuals with sensory disabilities, this document is available in alternate formats. For information call: (916) 654-6410 or TDD (916) 654-3880 or write Records and Forms Management, 1120 N Street, MS-89, Sacramento, CA 95814.

DIST	COUNTY	ROUTE	KILOMETER POST TOTAL PROJECT	SHEET No	TOTAL SHEETS
04	Ala	80	1.6/2.7	561	643

REGISTERED ELECTRICAL ENGINEER 05/15/06 DATE

1-29-07
PLANS APPROVAL DATE

PB POWER, inc.
A Parsons Brinckerhoff Company
303 Second St., Suite 700N
San Francisco, CA 94107-1317

The State of California or its officers or agents shall not be responsible for the accuracy or completeness of electronic copies of this plan sheet.

To get to the Caltrans web site, go to: http://www.dot.ca.gov

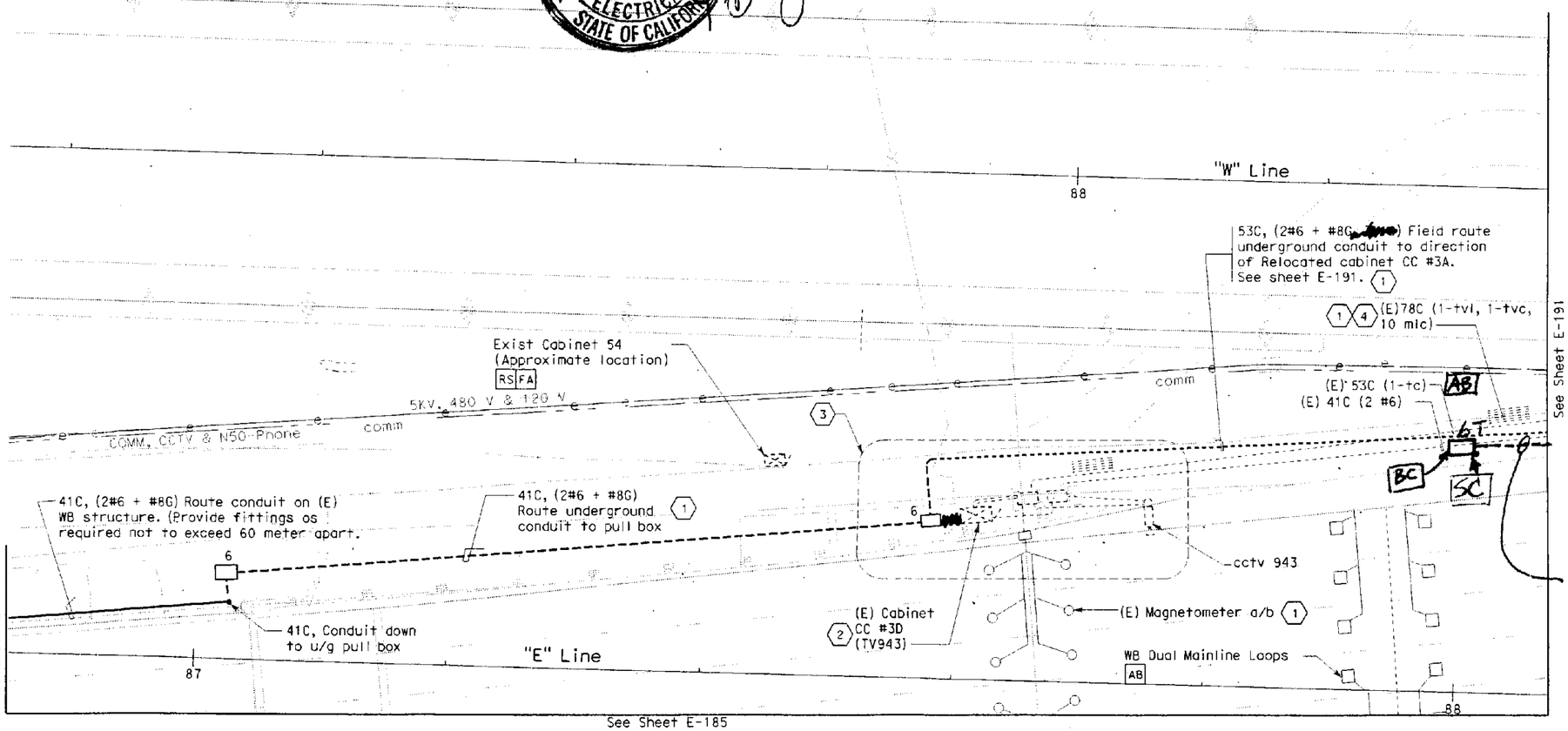

41C, 2#6 (120 VAC)

SHEET NOTES:

1. Contractor to protect installation for duration as specified by the Engineer.
2. Controller cabinets shall be provided with wireless communication Type GPRS. See TOS special provisions.
3. See Detail 1, sheet E-194.
4. Contractor to pull out cable 10 mlc back to adjacent (E) magnetomer pull box, see Detail 1, sheet E-194.

NOTES:

1. References:
   - TOS equipment is shown for routing conduit only. For details on when TOS equipment shall be installed, see special provisions.
2. Contractor shall locate all existing installations prior to proceeding with new installation.
3. All Temporary Underground and Roadway At-Grade work is to remain in place at the end of the contract.

C.C.O. No.: 22
Suppl. No.:
Contract No. 04-0120L4
Sheet of 2 of 4
Date: 11/15/07

TEMPORARY UNDERGROUND AND ROADWAY AT-GRADE
(LIGHTING AND ELECTRICAL SYSTEMS EXISTING NORTH SIDE)

SCALE: 1:200

E-190

DATE	BY	AB	2/06	DATE REVISED
CHECKED				

BEHZAD GOLEMOHAMMADI

LAST REVISION 00-00-00 | DATE PLOTTED = 31-JAN-2007 | TIME PLOTTED = 15:46

FOR REDUCED PLANS ORIGINAL SCALE IS IN MILLIMETERS 0 20 40 60 80

DGN FILE =>40120lua190.dgn
USERNAME =>trphils

CU 04251 | EA 0120L1

DIST	COUNTY	ROUTE	KILOMETER POST TOTAL PROJECT	SHEET NO	TOTAL SHEETS
04	Ala	80	1.6/2.7	565	643

REGISTERED ELECTRICAL ENGINEER 05/15/06 DATE

1-29-07
PLANS APPROVAL DATE

REGISTERED PROFESSIONAL ENGINEER JENS ERLINGSSON No. 8249 Exp. 9/30/08 ELECTRICAL STATE OF CALIFORNIA

PB POWER, Inc.
A Parsons Brinckerhoff Company
303 Second St., Suite 700N
San Francisco, CA 94107-1317

The State of California or its officers or agents shall not be responsible for the accuracy or completeness of electronic copies of this plan sheet.

To get to the Caltrans web site, go to: http://www.dot.ca.gov

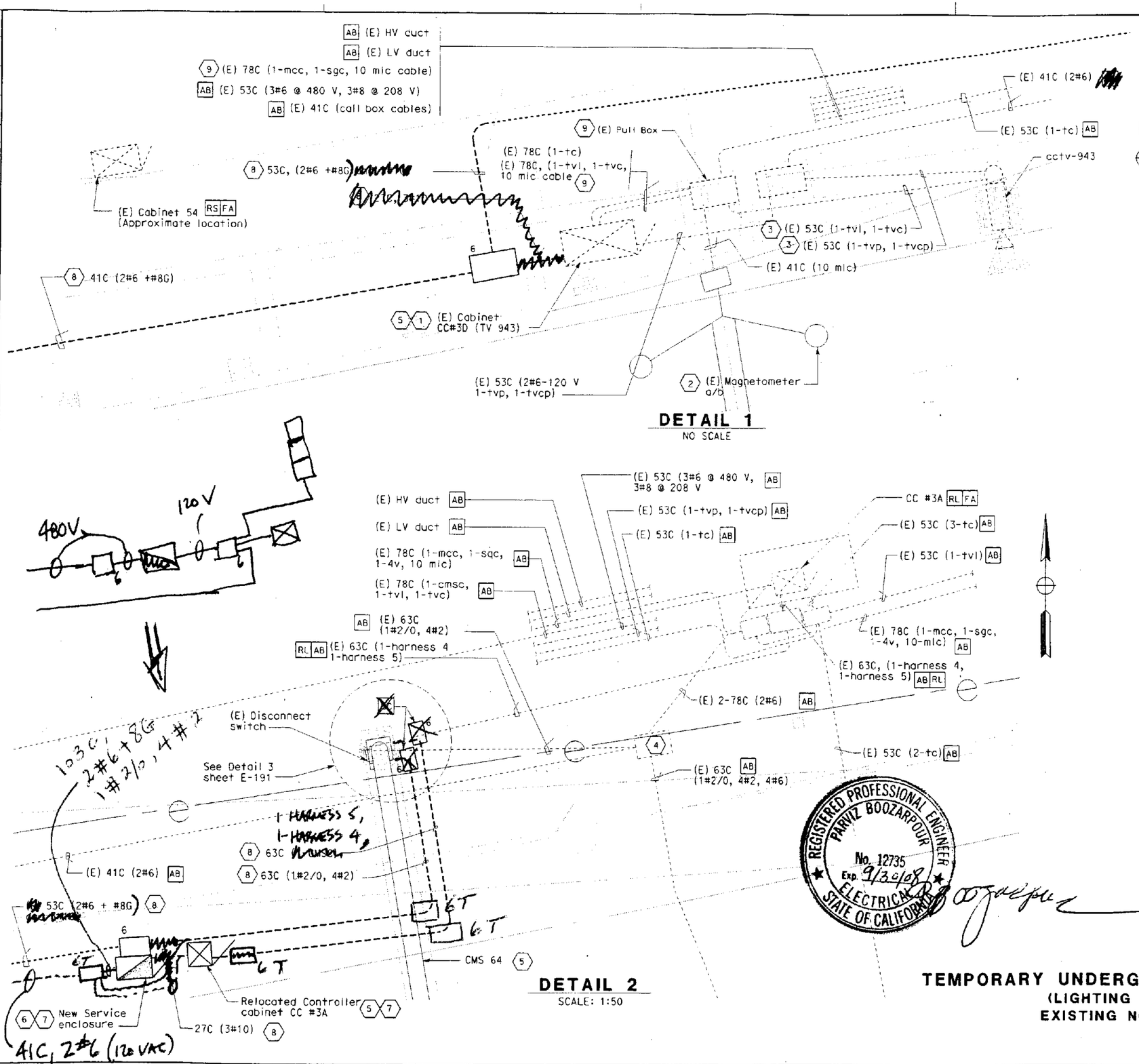

DETAIL 1
NO SCALE

DETAIL 2
SCALE: 1:50

SHEET NOTES:

1. Contractor shall install and connect five State furnished magnetometer sensor units in CC#3D.
2. Magnetometer a/b shall remain operational.
3. Existing conduit and applicable pull boxes including new installation installed by Contractor shall be protected for duration as specified by Engineer.
4. Pull box shall be removed and become the property of the Contractor.
5. Controller cabinets shall be provided with wireless communication type GPRS. See special provisions.
6. Contractor shall provide and install new Service enclosure Type III-3A. See sheet E-196.
7. Contractor to provide concrete foundation pads per Caltrans ES-2D and ES-3C Install conduits as required and connections per special provisions.
8. Contractor to protect installation for duration as specified by the Engineer.
9. Contractor to pull out (E) 10 mic cable back to adjacent to (E) magnetomer pull box and route cable to (E) Cabinet CC#3D. No cable splices is allowed.

NOTES:

1. References:
   - TOS are shown for conduit routing only. For additional details of TOS controllers and devices, see Special Provisions.
2. Contractor shall verify the location of existing installations prior to proceeding with new installation.
3. All Temporary Underground Roadway At-Grade work is to remain in place at the end of the contract.

REGISTERED PROFESSIONAL ENGINEER PARVIZ BOOZARPOUR No. 12735 Exp. 9/30/08 ELECTRICAL STATE OF CALIFORNIA

C.C.O. No.: 22
Suppl. No.:
Contract No. 04-0120L4
Sheet of 4 of 4
Date: 11/15/07

DETAILS
TEMPORARY UNDERGROUND AND ROADWAY AT-GRADE
(LIGHTING AND ELECTRICAL SYSTEMS EXISTING NORTH SIDE PARTIAL PLANS)

SCALE AS NOTED

E-194

STATE OF CALIFORNIA - DEPARTMENT OF TRANSPORTATION
Caltrans
DESIGN OVERSIGHT BEHZAD GOLEMOHAMMADI
CALCULATED/DESIGNED BY FK DATE 2/06
CHECKED BY AB 2/06
REVISED BY DATE REVISED

LAST REVISION 00-00-00 | DATE PLOTTED => 31-JAN-2007 | TIME PLOTTED => 15:47

FOR REDUCED PLANS ORIGINAL SCALE IS IN MILLIMETERS 0 20 40 60 80
DGN FILE =>40120lu0194.dgn
USERNAME =>trphills
CU 04251 | EA 0120L1

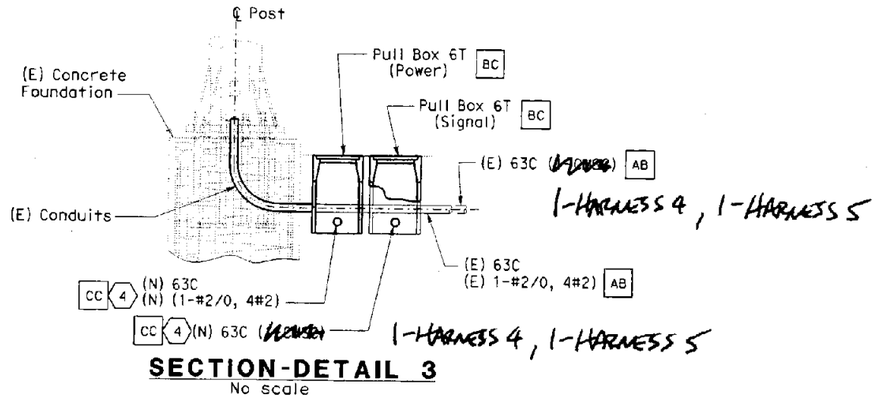

SECTION-DETAIL 3
No scale

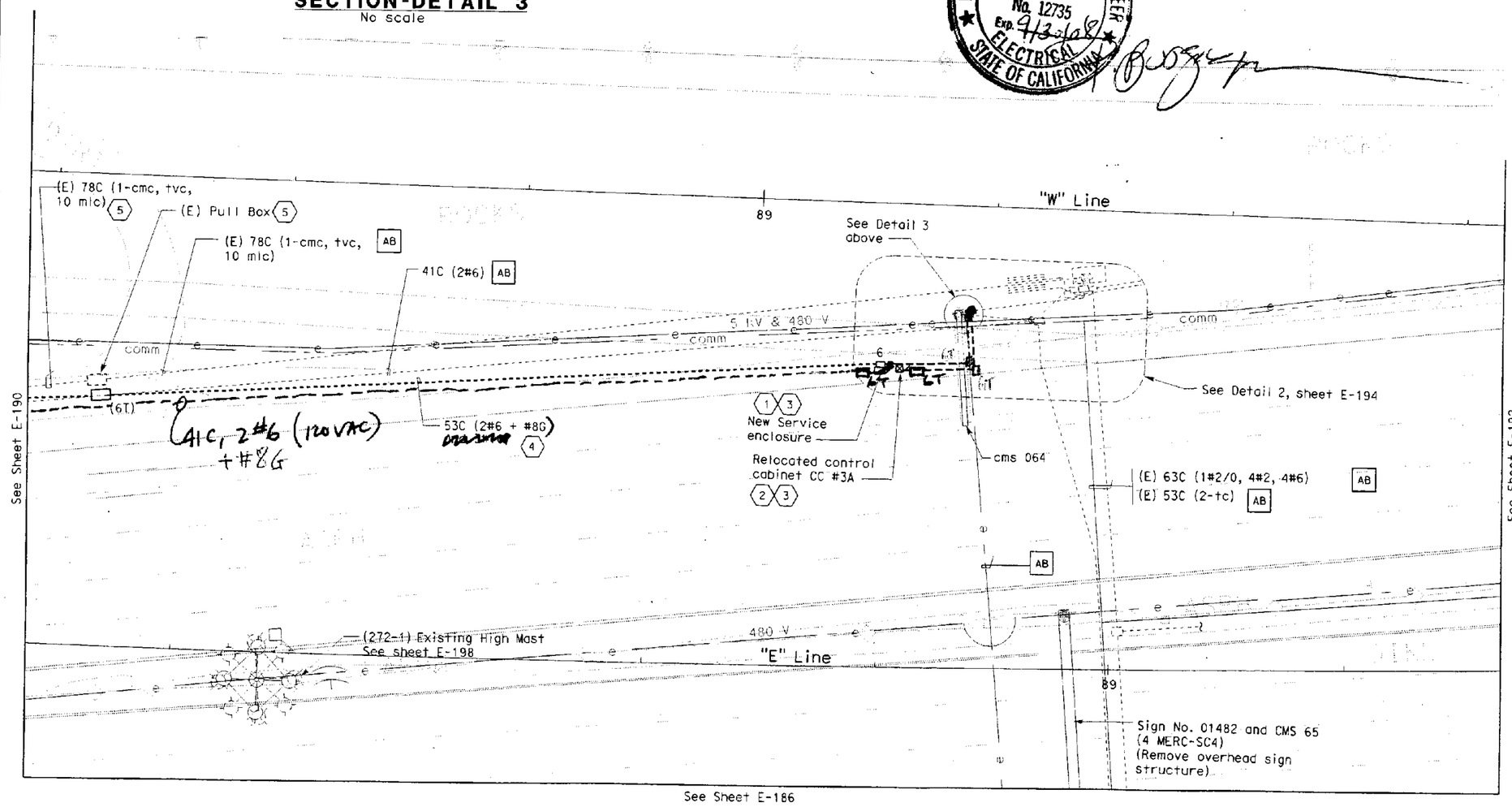

DIST	COUNTY	ROUTE	KILOMETER POST TOTAL PROJECT	SHEET No.
04	Ala	80	1.6/2.7	562

REGISTERED ELECTRICAL ENGINEER — DATE 05/15/06

1-29-07
PLANS APPROVAL DATE

PB POWER, Inc.
A Parsons Brinckerhoff Company
303 Second St., Suite 700N
San Francisco, CA 94107-1317

REGISTERED PROFESSIONAL ENGINEER JENS ERLINGSSON No. 6249 Exp. 9/30/08 ELECTRICAL STATE OF CALIFORNIA

The State of California or its officers or agents shall not be responsible for the accuracy or completeness of electronic copies of this plan sheet.

To get to the Caltrans web site, go to: http://www.dot.ca.gov

REGISTERED PROFESSIONAL ENGINEER PARVIZ BOOZARPOUR No. 12735 Exp. 9/3/08 ELECTRICAL STATE OF CALIFORNIA

SHEET NOTES:

1. Contractor to provide and install new Service enclosure Type III-3A See sheet E-196.
2. Contractor to relocate (E) Control cabinet CC #3A as shown on this sheet.
3. Contractor to provide concrete foundation pads per Caltrans ES-2D and ES-3C. Contractor to install conduits and cannnections per special provisions.
4. Contractor to protect installation for duration as specified by the Engineer.
5. Contractor to cut (E) 10 mlc cable at this location and pull out cable back to adjacent (E) magnetomer pull box, see Detail 1 sheet E-194.

C.O.O. No.: 22
Suppl. No.:
Contract No. 04-0120L4
Sheet of 3 of 4
Date: 11/15/07

NOTES:

1. References:
   - TOS are shown for conduit routing only. For details of TOS controllers installed, see Special Provisions.
   - For underground and Roadway At-Grade, Plans, Manholes and Duct Bank Sections, see sheets starting at E-80.
2. Contractor shall locate all existing installations prior to proceeding with new installation.
3. All Temporary Underground and Roadway At-Grade work is to remain in place at the end of the contract.

TEMPORARY UNDERGROUND AND ROADWAY AT-GRADE
(LIGHTING AND ELECTRICAL SYSTEMS EXISTING NORTH SIDE)
SCALE: 1:200

STATE OF CALIFORNIA - DEPARTMENT OF TRANSPORTATION
Caltrans

DESIGN OVERSIGHT: BEHZAD GOLEMOHAMMADI
CALCULATED/DESIGNED BY: FK — DATE 2/06 — REVISED BY
CHECKED BY: AB — 2/06 — DATE REVISED

FOR REDUCED PLANS ORIGINAL SCALE IS IN MILLIMETERS 0 20 40 60 80
DGN FILE =>40120lu0191.dgn
USERNAME =>trcarol

E-191

STATE OF CALIFORNIA - DEPARTMENT OF TRANSPORTATION

CONTRACT CHANGE ORDER

Change Requested by: Engineer

CCO 24	Suppl. No. 0	Contract No. 04 - 0120L4	Road ALA-80-1.6/2.7	FED. AID LOC.: NO FED AID

M C M CONSTRUCTION INC

You are directed to make the following changes from the plans and specifications or do the following described work not included in the plans and specifications for this contract. ***NOTE: This change order is not effective until approved by the Engineer.***

Description of work to be done, estimate of quantities and prices to be paid. (Segregate between additional work at contract price, agreed price and force account.) Unless otherwise stated, rates for rental of equipment cover only such time as equipment is actually used and no allowance will be made for idle time. This last percentage shown is the net accumulated increase or decrease from the original quantity in the Engineer's Estimate.

Extra Work at Force Account:

Reset duct bank manholes to match original grade as determined by the Engineer.

Estimated cost of Extra Work at Force Account $15,000.00

RECEIVED
DEC 04 2007
MCM PAYROLL DEPT.

Estimated Cost: Increase ☑ Decrease ☐ **$15,000.00**

By reason of this order the time of completion will be adjusted as follows: 0 days

Submitted by		
Signature	Resident Engineer BEN GHAFGHAZI	Date 11/29/07
Approval Recommended by		
Signature	Construction Engineer Ben Ghafghazi	Date 11/29/07
Engineer Approval by		
Signature	Construction Engineer Ben Ghafghazi	Date 1/10/08

We the undersigned contractor, have given careful consideration to the change proposed and agree, if this proposal is approved, that we will provide all equipment, furnish the materials, except as may otherwise be noted above, and perform all services necessary for the work above specified, and will accept as full payment therefor the prices shown above.

NOTE: If you, the contractor, do not sign acceptance of this order, your attention is directed to the requirements of the specifications as to proceeding with the ordered work and filing a written protest within the time therein specified.

Contractor Acceptance by		
Signature	(Print name and title) EDMUNDO A. PUCHI, TREASURER	Date 1/9/08

STATE OF CALIFORNIA - DEPARTMENT OF TRANSPORTATION

CONTRACT CHANGE ORDER MEMORANDUM

DATE: 11/27/2007 Page 1 of 1

TO: AMER BATA / BEN GHAFGHAZI

FROM: BEN GHAFGHAZI

CLPY

FILE: E.A. 04 - 0120L4
CO-RTE-PM ALA-80-1.6/2.7
FED. NO. NO FED AID

CCO#: 24 | SUPPLEMENT#: 0 | Category Code: ~~CBPC~~

CONTINGENCY BALANCE (incl. this change) **$18,070,684.84**

COST: **$15,000.00** INCREASE ☑ DECREASE ☐

HEADQUARTERS APPROVAL REQUIRED? ☐ YES ☑ NO

SUPPLEMENTAL FUNDS PROVIDED: **$15,000.00**

IS THIS REQUEST IN ACCORDANCE WITH ENVIRONMENTAL DOCUMENTS? ☑ YES ☐ NO

CCO DESCRIPTION:
Adjust manholes to grade

PROJECT DESCRIPTION:
Construct bridge, roadway, building and electrical system.

Original Contract Time:	Time Adj. This Change:	Previously Approved CCO Time Adjustments:	Percentage Time Adjusted: (including this change)	Total # of Unreconciled Deferred Time CCO(s): (including this change)
810 Day(s)	0 Day(s)	0 Day(s)	0 %	0

THIS CHANGE ORDER PROVIDES FOR:
Resetting utility duct bank manholes that were installed at wrong grade.

This change is necessary to reset manholes that were installed to plan elevation that did not match original ground (OG) elevations. The plan elevations are 0.15 to .025 M higher that OG. The manholes must be removed and reset to match OG.

This work will be paid as extra work at force account for an estimated $15,000.00 which can be financed from the contingency fund.

No adjustment of contract time is warranted, as this change does not affect the controlling operation.

Design and Maintenance concurrence is not necessary because this CCO is for a field adjustment and does not change the duct bank or manholes.

CONCURRED BY:

Construction Engineer:	Ben Ghafghazi	Date 11/29/07
Bridge Engineer:		Date
Project Engineer:		Date
Project Manager:		Date
FHWA Rep.:		Date
Environmental:		Date
Other (specify):		Date
Other (specify):		Date
District Prior Approval By:		Date
HQ (Issue Approve) By:		Date
Resident Engineer's Signature:		Date 11/29/07

ESTIMATE OF COST

	THIS REQUEST	TOTAL TO DATE
ITEMS	$0.00	$0.00
FORCE ACCOUNT	$15,000.00	$15,000.00
AGREED PRICE	$0.00	$0.00
ADJUSTMENT	$0.00	$0.00
TOTAL	$15,000.00	$15,000.00

FEDERAL PARTICIPATION

☐ PARTICIPATING ☐ PARTICIPATING IN PART ☑ NONE
☐ NON-PARTICIPATING (MAINTENANCE) ☐ NON-PARTICIPATING

FEDERAL SEGREGATION (if more than one Funding Source or P.I.P. type)
☑ CCO FUNDED PER CONTRACT ☐ CCO FUNDED AS FOLLOWS

FEDERAL FUNDING SOURCE	PERCENT

ADA Notice: For individuals with sensory disabilities, this document is available in alternate formats. For information call: (916) 654-6410 or TDD (916) 654-3880 or write Records and Forms Management, 1120 N Street, MS-89, Sacramento, CA 95814.

STATE OF CALIFORNIA - DEPARTMENT OF TRANSPORTATION

CONTRACT CHANGE ORDER

Change Requested by: Engineer

CCO 25	Suppl. No. 0	Contract No. 04 - 0120L4	Road ALA-80-1.6/2.7	FED. AID LOC.: NO FED AID

To: **M C M CONSTRUCTION INC**

You are directed to make the following changes from the plans and specifications or do the following described work not included in the plans and specifications for this contract. ***NOTE: This change order is not effective until approved by the Engineer.***

Description of work to be done, estimate of quantities and prices to be paid. (Segregate between additional work at contract price, agreed price and force account.) Unless otherwise stated, rates for rental of equipment cover only such time as equipment is actually used and no allowance will be made for idle time. This last percentage shown is the net accumulated increase or decrease from the original quantity in the Engineer's Estimate.

Extra Work at Force Account:

Remove and dispose of buried man made objects in accordance with Section 19-1.04, "Removal and Disposal of Buried Man-Made Objects" of the Standard Specifications.

Estimated cost of Extra Work at Force Account $200,000.00

Estimated Cost: Increase ☑ Decrease ☐ $200,000.00

By reason of this order the time of completion will be adjusted as follows: Deferred

Submitted by		
Signature	Resident Engineer BEN GHAFGHAZI	Date 2/26/08
Approval Recommended by		
Signature	Construction Engineer Ben Ghafghazi	Date 2/26/08
Engineer Approval by		
Signature	Construction Manager Amer Bata	Date 3/26/08

We the undersigned contractor, have given careful consideration to the change proposed and agree, if this proposal is approved, that we will provide all equipment, furnish the materials, except as may otherwise be noted above, and perform all services necessary for the work above specified, and will accept as full payment therefor the prices shown above.

NOTE: If you, the contractor, do not sign acceptance of this order, your attention is directed to the requirements of the specifications as to proceeding with the ordered work and filing a written protest within the time therein specified.

Contractor Acceptance by		
Signature	(Print name and title) EDMUNDO A. PUCHI, TREASURER	Date 3/3/08

STATE OF CALIFORNIA - DEPARTMENT OF TRANSPORTATION

CONTRACT CHANGE ORDER MEMORANDUM

TO: AMER BATA / BEN GHAFGHAZI	FILE: E.A. 04 - 0120L4
FROM: BEN GHAFGHAZI	CO-RTE-PM ALA-80-1.6/2.7
	FED. NO. NO FED AID
CCO#: 25 SUPPLEMENT#: 0 Category Code: ALZZ	CONTINGENCY BALANCE (incl. this change) $17,931,284.84
COST: $200,000.00 INCREASE ☑ DECREASE ☐	HEADQUARTERS APPROVAL REQUIRED? ☐ YES ☑ NO
SUPPLEMENTAL FUNDS PROVIDED: $200,000.00	IS THIS REQUEST IN ACCORDANCE WITH ENVIRONMENTAL DOCUMENTS? ☑ YES ☐ NO
CCO DESCRIPTION: Remove buried man made objects	**PROJECT DESCRIPTION:** Construct bridge, roadway, building and electrical system.

Original Contract Time:	Time Adj. This Change:	Previously Approved CCO Time Adjustments:	Percentage Time Adjusted: (including this change)	Total # of Unreconciled Deferred Time CCO(s): (including this change)
810 Day(s)	DEF Day(s)	0 Day(s)	0 %	0

THIS CHANGE ORDER PROVIDES FOR:

Removal and disposal of buried man made objects in accordance with Section 19-1.04, "Removal and Disposal of Buried Man-Made Objects" of the Standard Specifications.

This change is necessary for the removal of buried man made objects that were encountered during excavation for contract item work. This is for objects not indicated in the plans or Special Provisions or that could be visibly ascertained prior to excavation.

This work is not covered by any contract items, therefore, payment for this work will be at Extra Work at Force Account for an estimated cost of $200,000.00, which can be supplemental funds of $800,000.00 allotted for this work.

Design and Maintenance concurrence are not necessary since this change was anticipated in the contract.

Adjustment of contract time is deferred pending completion of the work specified in this change as it may[affect the controlling operation.

CONCURRED BY:

Construction Engineer:	Ben Ghafghazi	Date 2/26/08
Bridge Engineer:		Date
Project Engineer:		Date
Project Manager:		Date
FHWA Rep.:		Date
Environmental:		Date
Other (specify):		Date
Other (specify):		Date
District Prior Approval By:		Date
HQ (Issue Approve) By:		Date
Resident Engineer's Signature:		Date 2/26/08

ESTIMATE OF COST

	THIS REQUEST	TOTAL TO DATE
ITEMS	$0.00	$0.00
FORCE ACCOUNT	$200,000.00	$200,000.00
AGREED PRICE	$0.00	$0.00
ADJUSTMENT	$0.00	$0.00
TOTAL	$200,000.00	$200,000.00

FEDERAL PARTICIPATION

☐ PARTICIPATING ☐ PARTICIPATING IN PART ☑ NONE
☐ NON-PARTICIPATING (MAINTENANCE) ☐ NON-PARTICIPATING

FEDERAL SEGREGATION (if more than one Funding Source or P.I.P. type)
☑ CCO FUNDED PER CONTRACT ☐ CCO FUNDED AS FOLLOWS

FEDERAL FUNDING SOURCE	PERCENT

ADA Notice: For individuals with sensory disabilities, this document is available in alternate formats. For information call: (916) 654-6410 or TDD (916) 654-3880 or write Records and Forms Management, 1120 N Street, MS-89, Sacramento, CA 95814.

STATE OF CALIFORNIA - DEPARTMENT OF TRANSPORTATION

CONTRACT CHANGE ORDER MEMORANDUM

AMER BATA / BEN GHAFGHAZI

FROM: BEN GHAFGHAZI

FILE: **E.A.** 04 - 0120L4
CO-RTE-PM ALA-80-1.6/2.7
FED. NO. NO FED AID

CCO#: **25** | SUPPLEMENT#: **1** | Category Code: **ALZZ**

CONTINGENCY BALANCE (incl. this change) **$4,646,552.40**

COST: **$150,000.00** INCREASE ☑ DECREASE ☐

HEADQUARTERS APPROVAL REQUIRED? ☐ YES ☑ NO

SUPPLEMENTAL FUNDS PROVIDED: **$150,000.00**

IS THIS REQUEST IN ACCORDANCE WITH ENVIRONMENTAL DOCUMENTS? ☑ YES ☐ NO

CCO DESCRIPTION:
Remove buried man made objects.

PROJECT DESCRIPTION:
Construct bridge, roadway, building and electrical system.

Original Contract Time:	Time Adj. This Change:	Previously Approved CCO Time Adjustments:	Percentage Time Adjusted: (including this change)	Total # of Unreconciled Deferred Time CCO(s): (including this change)
810 Day(s)	**DEF** Day(s)	**184** Day(s)	**23** %	**11**

THIS CHANGE ORDER PROVIDES FOR:

Additional funds for removal and disposal of buried man made objects in accordance with Section 19-1.04, "Removal and Disposal of Buried Man-Made Objects" of the Standard Specifications.

This change is necessary for the removal of buried man made objects that were encountered during excavation for contract item work. This is for objects not indicated in the plans or Special Provisions or that could be visibly ascertained prior to excavation. The extent of buried man made objects has been greater than originally anticipated in CCO 25. It is also anticipated that additional buried man made objects may be encountered during construction of the eastbound 80 detour.

This work is not covered by any contract items, therefore, payment for this work will be at Extra Work at Force Account for an estimated cost of $150,000.00, which can be supplemental funds of $800,000.00 allotted for this work.

Design and Maintenance concurrence are not necessary since this change was anticipated in the contract.

Adjustment of contract time is deferred pending completion of the work specified in this change as it may affect the controlling operation.

CONCURRED BY:

Construction Engineer:	Ben Ghafghazi	Date 9/16/09
Bridge Engineer:		Date
Project Engineer:		Date
Project Manager:		Date
FHWA Rep.:		Date
Environmental:		Date
Other (specify):		Date
Other (specify):		Date
District Prior Approval By:		Date
HQ (Issue Approve) By:		Date
Resident Engineer's Signature:		Date 9/16/09

ESTIMATE OF COST

	THIS REQUEST	TOTAL TO DATE
ITEMS	$0.00	$0.00
FORCE ACCOUNT	$150,000.00	$350,000.00
AGREED PRICE	$0.00	$0.00
ADJUSTMENT	$0.00	$0.00
TOTAL	$150,000.00	$350,000.00

FEDERAL PARTICIPATION

☐ PARTICIPATING ☐ PARTICIPATING IN PART ☑ NONE
☐ NON-PARTICIPATING (MAINTENANCE) ☐ NON-PARTICIPATING

FEDERAL SEGREGATION (if more than one Funding Source or P.I.P. type)
☑ CCO FUNDED PER CONTRACT ☐ CCO FUNDED AS FOLLOWS

FEDERAL FUNDING SOURCE	PERCENT

ADA Notice: For individuals with sensory disabilities, this document is available in alternate formats. For information call: (916) 654-6410 or TDD (916) 654-3880 or write Records and Forms Management, 1120 N Street, MS-89, Sacramento, CA 95814.

STATE OF CALIFORNIA - DEPARTMENT OF TRANSPORTATION

CONTRACT CHANGE ORDER

Change Requested by: Engineer

CCO 25	Suppl. No. 1	Contract No. 04 - 0120L4	Road ALA-80-1.6/2.7	FED. AID LOC.: NO FED AID

To: **M C M CONSTRUCTION INC**

You are directed to make the following changes from the plans and specifications or do the following described work not included in the plans and specifications for this contract. ***NOTE: This change order is not effective until approved by the Engineer.***

Description of work to be done, estimate of quantities and prices to be paid. (Segregate between additional work at contract price, agreed price and force account.) Unless otherwise stated, rates for rental of equipment cover only such time as equipment is actually used and no allowance will be made for idle time. This last percentage shown is the net accumulated increase or decrease from the original quantity in the Engineer's Estimate.

Additional funds for removal and disposal of buried man made objects.

Extra Work at Force Account:

Remove and dispose of buried man made objects in accordance with Section 19-1.04, "Removal and Disposal of Buried Man-Made Objects" of the Standard Specifications.

Estimated cost of Extra Work at Force Account $150,000.00

Estimated Cost: Increase ☑ **Decrease** ☐ **$150,000.00**

By reason of this order the time of completion will be adjusted as follows: Deferred

Signature	**Resident Engineer** BEN GHAFGHAZI	**Date** 9/16/09
Signature	**Construction Manager** Amer Bata	**Date** 9/16/09
Signature	**Construction Manager** Amer Bata	**Date** 9/16/09

We the undersigned contractor, have given careful consideration to the change proposed and agree, if this proposal is approved, that we will provide all equipment, furnish the materials, except as may otherwise be noted above, and perform all services necessary for the work above specified, and will accept as full payment therefor the prices shown above.

NOTE: If you, the contractor, do not sign acceptance of this order, your attention is directed to the requirements of the specifications as to proceeding with the ordered work and filing a written protest within the time therein specified.

Signature N/A	**(Print name and title)**	**Date**

STATE OF CALIFORNIA - DEPARTMENT OF TRANSPORTATION

CONTRACT CHANGE ORDER MEMORANDUM

DATE: 12/28/2010 Page 1 of 1

TO: AMER BATA / BEN GHAFGHAZI	FILE: E.A. 04 - 0120L4
FROM: BEN GHAFGHAZI	CO-RTE-PM ALA-80-1.6/2.7
	FED. NO. NO FED AID
CCO#: 25 SUPPLEMENT#: 2 Category Code: ALZZ	CONTINGENCY BALANCE (incl. this change): $845,847.90
COST: $50,000.00 INCREASE ☑ DECREASE ☐	HEADQUARTERS APPROVAL REQUIRED? ☐ YES ☑ NO
SUPPLEMENTAL FUNDS PROVIDED: $50,000.00	IS THIS REQUEST IN ACCORDANCE WITH ENVIRONMENTAL DOCUMENTS? ☑ YES ☐ NO
CCO DESCRIPTION: Remove and Dispose of Buried Man Made Ob	**PROJECT DESCRIPTION:** Construct bridge, roadway, building and electrical system.

Original Contract Time:	Time Adj. This Change:	Previously Approved CCO Time Adjustments:	Percentage Time Adjusted: (including this change)	Total # of Unreconciled Deferred Time CCO(s): (including this change)
810 Day(s)	0 Day(s)	0 Day(s)	0 %	0

THIS CHANGE ORDER PROVIDES FOR:

Additional funding for removing and disposing of buried man-made objects as specified under the original Change Order No. 25.

The original Change Order No. 25 provided for the contractor to remove and dispose of buried man-made objects encountered during the structural and roadway excavations which were not identified on the contract plans. Change Order No. 25, Supplement No. 1 provided additional funding for this work. Additional concrete and asphalt debris was encountered during the excavation for the eastbound structure which exceeded the previous estimates for this work.

It is now anticipated that additional funding of $50,000.00 will be required to fund the work.

The work shall be compensated as extra work at force account at an estimated cost of $50,000.00 which shall be financed from the contract provided supplemental funds of $800,000.00 allotted for this work. A cost analysis is on file.

No adjustment of contract time is warranted as the change will not affect the controlling operation.

Maintenance concurrence is not required as the change does not affect any permanent roadway features.

CONCURRED BY:

Construction Engineer:	Ben Ghafghazi	Date 12/28/2010
Bridge Engineer:		Date
Project Engineer:		Date
Project Manager:		Date
FHWA Rep.:		Date
Environmental:		Date
Other (specify):		Date
Other (specify):		Date
District Prior Approval By:		Date
HQ (Issue Approve) By:		Date
Resident Engineer's Signature:		Date 12/28/2010

ESTIMATE OF COST

	THIS REQUEST	TOTAL TO DATE
ITEMS	$0.00	$0.00
FORCE ACCOUNT	$50,000.00	$400,000.00
AGREED PRICE	$0.00	$0.00
ADJUSTMENT	$0.00	$0.00
TOTAL	$50,000.00	$400,000.00

FEDERAL PARTICIPATION

☐ PARTICIPATING ☐ PARTICIPATING IN PART ☑ NONE
☐ NON-PARTICIPATING (MAINTENANCE) ☐ NON-PARTICIPATING

FEDERAL SEGREGATION (if more than one Funding Source or P.I.P. type)
☐ CCO FUNDED PER CONTRACT ☐ CCO FUNDED AS FOLLOWS

FEDERAL FUNDING SOURCE	PERCENT

ADA Notice: For individuals with sensory disabilities, this document is available in alternate formats. For information call: (916) 654-6410 or TDD (916) 654-3880 or write Records and Forms Management, 1120 N Street, MS-89, Sacramento, CA 95814.

STATE OF CALIFORNIA - DEPARTMENT OF TRANSPORTATION

CONTRACT CHANGE ORDER

Change Requested by: Engineer

CCO: 25	Suppl. No. 2	Contract No. 04 - 0120L4	Road ALA-80-1.6/2.7	FED. AID LOC.: NO FED AID

To: **M C M CONSTRUCTION INC**

You are directed to make the following changes from the plans and specifications or do the following described work not included in the plans and specifications for this contract. ***NOTE: This change order is not effective until approved by the Engineer.***

Description of work to be done, estimate of quantities and prices to be paid. (Segregate between additional work at contract price, agreed price and force account.) Unless otherwise stated, rates for rental of equipment cover only such time as equipment is actually used and no allowance will be made for idle time. This last percentage shown is the net accumulated increase or decrease from the original quantity in the Engineer's Estimate.

Extra Work at Force Account:

Provide additional funds for the work specified under the original Change Order No. 25.

Estimated cost of Extra Work at Force Account $50,000.00

Estimated Cost: Increase ☑ Decrease ☐ **$50,000.00**

By reason of this order the time of completion will be adjusted as follows: 0 days

Submitted by

Signature	Resident Engineer BEN GHAFGHAZI	Date 12/28/2010

Approval Recommended by

Signature	Construction Manager For Hazem El-Mahmoud Amer Bata	Date 12/29/10

Engineer Approval by

Signature	Construction Manager For Hazem El-Mahmoud Amer Bata	Date 12/29/10

We the undersigned contractor, have given careful consideration to the change proposed and agree, if this proposal is approved, that we will provide all equipn furnish the materials, except as may otherwise be noted above, and perform all services necessary for the work above specified, and will accept as full paymer therefor the prices shown above.

NOTE: If you, the contractor, do not sign acceptance of this order, your attention is directed to the requirements of the specifications as to proceeding with the ordered work and filing a written protest within the time therein specified.

Contractor Acceptance by

Signature	(Print name and title)	Date

STATE OF CALIFORNIA - DEPARTMENT OF TRANSPORTATION

CONTRACT CHANGE ORDER

Change Requested by: Engineer

CCO 26	Suppl. No. 0	Contract No. 04 - 0120L4	Road ALA-80-1.6/2.7	FED. AID LOC.: NO FED AID

To: **M C M CONSTRUCTION INC**

You are directed to make the following changes from the plans and specifications or do the following described work not included in the plans and specifications for this contract. ***NOTE: This change order is not effective until approved by the Engineer.***

Description of work to be done, estimate of quantities and prices to be paid. (Segregate between additional work at contract price, agreed price and force account.) Unless otherwise stated, rates for rental of equipment cover only such time as equipment is actually used and no allowance will be made for idle time. This last percentage shown is the net accumulated increase or decrease from the original quantity in the Engineer's Estimate.

Reclassify Item #64, Structure Excavation (Type D), from non-hazardous to Class II. Dispose of material at a landfill that accepts Class II soils.

Adjustment of Compensation at Unit Price:

Compensate the Contractor for additional transportation and disposal fees incurred due to the change in classification of Item #64, Structure Excavation (Type D). Removal and disposal of spoils shall be in accordance with Section 10-1.41, "Earthwork," subsection, "Hazardous Material Excavation," of the Special Provisions. For this work, the contractor will be paid an additional $30 for each M3 of Item #64 paid.

Adjustment of Compensation at Agreed Unit Price .....14,000 M3 @ $30.00 = $420,000.00

This sum constitutes full and final compensation for all issues related to the removal and disposal of structural excavation for Item #64 and no further compensation will be allowed. The price above includes all markups for the work of this change.

Estimated Cost: **Increase** ☑ **Decrease** ☐ **$420,000.00**

By reason of this order the time of completion will be adjusted as follows: 0 days

Submitted by		
Signature	Resident Engineer BEN GHAFGHAZI	Date 3/26/08
Approval Recommended by		
Signature	Construction Manager Amer Bata	Date 3/26/08
Engineer Approval by		
Signature	Construction Manager Amer Bata	Date 8/20/08

We the undersigned contractor, have given careful consideration to the change proposed and agree, if this proposal is approved, that we will provide all equipment, furnish the materials, except as may otherwise be noted above, and perform all services necessary for the work above specified, and will accept as full payment therefor the prices shown above.

NOTE: If you, the contractor, do not sign acceptance of this order, your attention is directed to the requirements of the specifications as to proceeding with the ordered work and filing a written protest within the time therein specified.

Contractor Acceptance by		
Signature	(Print name and title) EDMUNDO A. PUCHI, TREASURER	Date 8/18/08

STATE OF CALIFORNIA - DEPARTMENT OF TRANSPORTATION

CONTRACT CHANGE ORDER MEMORANDUM

DATE: 12/6/2007

TO: AMER BATA / BEN GHAFGHAZI	FILE: **E.A.** 04 - 0120L4
FROM: BEN GHAFGHAZI	**CO-RTE-PM** ALA-80-1.6/2.7
	FED. NO. NO FED AID
CCO#: **26** SUPPLEMENT#: **0** Category Code: **CDMB**	CONTINGENCY BALANCE (incl. this change) **$17,166,678.50**
COST: **$420,000.00** INCREASE ☑ DECREASE ☐	HEADQUARTERS APPROVAL REQUIRED? ☑ YES ☐ NO
SUPPLEMENTAL FUNDS PROVIDED: **$420,000.00**	IS THIS REQUEST IN ACCORDANCE WITH ENVIRONMENTAL DOCUMENTS? ☑ YES ☐ NO
CCO DESCRIPTION: Additional disposal cost for Item #64.	**PROJECT DESCRIPTION:** Construct bridge, roadway, building and electrical system.

Original Contract Time:	Time Adj. This Change:	Previously Approved CCO Time Adjustments:	Percentage Time Adjusted: (including this change)	Total # of Unreconciled Deferred Time CCO(s): (including this change)
810 Day(s)	**0** Day(s)	**0** Day(s)	**0** %	**2**

THIS CHANGE ORDER PROVIDES FOR:

Compensation to the Contractor for the additional disposal fees incurred due to the change of disposal site for Item # 64, Structure Excavation (Type D).

The Contractor has provided documentation showing that the disposal site that the Contractor was planning to use rejected the material. The soil analytical prepared by the Department and furnished to bidders during bidding for Structure Excavation (Type D) was based on the assumption that the contractor will be using an In-Bay disposal site. Subsequent to the disposal site rejection of the material, the Department did a more detailed soil analysis. The analysis showed this material to meet parameters for Class II. Based on these results the initial landfill location did not accept the material as Type D material and the Contractor had to find a new location. This change order compensates the Contractor for the additional cost to dispose of the material at a landfill that will accept it as Class II material.

It should be noted that the contractor has chosen to provide a land based access to the in-Bay work sites by building a trestle in lieu of dredging for a marine access. Excavated materials will be contained and properly disposed of at an on land facility. This method will reduce the environmental impacts of the dredging on the San Francisco Bay waters.

The Department will compensate the contractor $30/M3 for 14,000 M3 for a total of $420,000. This amount will cover the cost of the additional transportation and dump fees. A detailed cost analysis is on file in the project records. Payment for this work will be financed from supplemental funds of which $588,000.00 was allotted for this work.

This change was discussed and concurred with Tony Anziano, Toll Program Manager, Brian Maroney, Bridge Design Oversight, Jon Tapping, Headquarters Construction, and Rob Kobal, Headquarters Construction Coordinator on March 24, 2008. Jaime Gutierrez, Project Engineer, and Ken Terpstra, Project Manager, also concur with this change. Issue and Approve was granted by Ken Darby on July 31, 2008. Maintenance concurrence is not necessary because this CCO does not make any design changes.

No adjustment of the contract time is warranted as this change does not affect the controlling operation.

ADA Notice: For individuals with sensory disabilities, this document is available in alternate formats. For information call: (916) 654-6410 or TDD (916) 654-3880 or write Records and Forms Management, 1120 N Street, MS-89, Sacramento, CA 95814.

CONCURRED BY:			
Construction Engineer:	Ben Ghafghazi	Date	8/25/08
Bridge Engineer:		Date	
Project Engineer:	Jaime Gutierrez	Date	7/31/08
Project Manager:	Ken Terprstra	Date	8/3/08
FHWA Rep.:		Date	
Environmental:		Date	
Other (specify):	Tony Anziano, Toll Manager	Date	3/24/08
Other (specify):	Brian Maroney, Bridge Design Ove	Date	3/24/08
District Prior Approval By:		Date	
HQ (Issue Approve) By:	Ken Darby	Date	7/31/08
Resident Engineer's Signature:		Date	8/25/08

ESTIMATE OF COST

	THIS REQUEST	TOTAL TO DATE
ITEMS	$0.00	$0.00
FORCE ACCOUNT	$0.00	$0.00
AGREED PRICE	$0.00	$0.00
ADJUSTMENT	$420,000.00	$420,000.00
TOTAL	$420,000.00	$420,000.00

FEDERAL PARTICIPATION

☐ PARTICIPATING ☐ PARTICIPATING IN PART ☑ NONE
☐ NON-PARTICIPATING (MAINTENANCE) ☐ NON-PARTICIPATING

FEDERAL SEGREGATION (if more than one Funding Source or P.I.P. type)
☑ CCO FUNDED PER CONTRACT ☐ CCO FUNDED AS FOLLOWS

FEDERAL FUNDING SOURCE	PERCENT

ADA Notice: For individuals with sensory disabilities, this document is available in alternate formats. For information call: (916) 654-6410 or TDD (916) 654-3880 or write Records and Forms Management, 1120 N Street, MS-89, Sacramento, CA 95814.

STATE OF CALIFORNIA - DEPARTMENT OF TRANSPORTATION

CONTRACT CHANGE ORDER

Change Requested by: Engineer

CCO 27	Suppl. No. 0	Contract No. 04 - 0120L4	Road ALA-80-1.6/2.7	FED. AID LOC.: NO FED AID

To: **M C M CONSTRUCTION INC**

You are directed to make the following changes from the plans and specifications or do the following described work not included in the plans and specifications for this contract. ***NOTE: This change order is not effective until approved by the Engineer.***

Description of work to be done, estimate of quantities and prices to be paid. (Segregate between additional work at contract price, agreed price and force account.) Unless otherwise stated, rates for rental of equipment cover only such time as equipment is actually used and no allowance will be made for idle time. This last percentage shown is the net accumulated increase or decrease from the original quantity in the Engineer's Estimate.

Extra Work at Force Account:

In accordance with Sections 10-1.18, "Obstructions," of the Special Provisions and 8-1.10, "Utility and Non-highway Facilities," of the Standard Specifications, for utilities not indicated on the plans or in the Special Provisions pothole, relocate or rearrange underground utilities which are in conflict with contract item work as determined by the Engineer.

Compensate the Contractor for delays related to utilities that have not been removed or relocated per the table in Section 10-1.18 of the Special Provisions.

Estimated cost of Extra Work at Force Account $150,000.00

Estimated Cost: Increase ☑ **Decrease** ☐ **$150,000.00**

By reason of this order the time of completion will be adjusted as follows: Deferred

Submitted by

Signature	Resident Engineer BEN GHAFGHAZI	Date 1/10/08

Approval Recommended by

Signature	Construction Engineer Ben Ghafghazi	Date 1/10/08

Engineer Approval by

Signature	Construction Manager Amer Bata	Date 2/1/08

We the undersigned contractor, have given careful consideration to the change proposed and agree, if this proposal is approved, that we will provide all equipment, furnish the materials, except as may otherwise be noted above, and perform all services necessary for the work above specified, and will accept as full payment therefor the prices shown above.

NOTE: If you, the contractor, do not sign acceptance of this order, your attention is directed to the requirements of the specifications as to proceeding with the ordered work and filing a written protest within the time therein specified.

Contractor Acceptance by

Signature	(Print name and title) EDMUNDO A. PUCHI, TREASURER	Date 1/23/08

STATE OF CALIFORNIA - DEPARTMENT OF TRANSPORTATION

CONTRACT CHANGE ORDER MEMORANDUM

TO: AMER BATA / BEN GHAFGHAZI	FILE: E.A. 04 - 0120L4
FROM: BEN GHAFGHAZI	CO-RTE-PM ALA-80-1.6/2.7
	FED. NO. NO FED AID
CCO#: 27 SUPPLEMENT#: 0 Category Code: CLPC	CONTINGENCY BALANCE (incl. this change) $17,185,004.84
COST: $150,000.00 INCREASE ☑ DECREASE ☐	HEADQUARTERS APPROVAL REQUIRED? ☐ YES ☑ NO
SUPPLEMENTAL FUNDS PROVIDED: $125,000.00	IS THIS REQUEST IN ACCORDANCE WITH ENVIRONMENTAL DOCUMENTS? ☑ YES ☐ NO
CCO DESCRIPTION: Existing Utilities	**PROJECT DESCRIPTION:** Construct bridge, roadway, building and electrical system.

Original Contract Time:	Time Adj. This Change:	Previously Approved CCO Time Adjustments:	Percentage Time Adjusted: (including this change)	Total # of Unreconciled Deferred Time CCO(s): (including this change)
810 Day(s)	0 Day(s)	0 Day(s)	0 %	0

THIS CHANGE ORDER PROVIDES FOR:

Potholing for utilities not indicated on the plans or in the Special Provisions and relocating or rearranging underground utilities which are in conflict with contract item work in accordance with Sections 10-1.18, "Obstructions," of the Special Provisions and 8-1.10, "Utility and Non-highway Facilities," of the Standard Specifications.

This change is necessary to identify and relocate any utilities that are in conflict with the contract work and are not addressed in the plans or special provisions or identified in the field as requiring relocation. This CCO also compensates for delays in the Contractor's operations for any utilities not relocated or abandoned per the table in Section 10-1.18 of the Special Provisions.

This work is not covered by any contract items, therefore, payment for this work will be at Extra Work at Force Account for an estimated cost of $150,000.00. This CCO can financed from a combination of the contingency fund and supplemental funds of $125,000.00 allotted for this work.

No adjustment of the contract time is warranted as this change does not affect the controlling operation.

Design and Maintenance concurrence is not necessary since this work was contemplated in the contract documents.

CONCURRED BY:

Construction Engineer:	Ben Ghafghazi	Date 1/10/08
Bridge Engineer:		Date
Project Engineer:		Date
Project Manager:		Date
FHWA Rep.:		Date
Environmental:		Date
Other (specify):		Date
Other (specify):		Date
District Prior Approval By:		Date
HQ (Issue Approve) By:		Date
Resident Engineer's Signature:		Date 1/10/08

ESTIMATE OF COST

	THIS REQUEST	TOTAL TO DATE
ITEMS	$0.00	$0.00
FORCE ACCOUNT	$150,000.00	$150,000.00
AGREED PRICE	$0.00	$0.00
ADJUSTMENT	$0.00	$0.00
TOTAL	$150,000.00	$150,000.00

FEDERAL PARTICIPATION

☐ PARTICIPATING ☐ PARTICIPATING IN PART ☑ NONE
☐ NON-PARTICIPATING (MAINTENANCE) ☐ NON-PARTICIPATING

FEDERAL SEGREGATION (if more than one Funding Source or P.I.P. type)
☑ CCO FUNDED PER CONTRACT ☐ CCO FUNDED AS FOLLOWS

FEDERAL FUNDING SOURCE PERCENT

ADA Notice: For individuals with sensory disabilities, this document is available in alternate formats. For information call: (916) 654-6410 or TDD (916) 654-3880 or write Records and Forms Management, 1120 N Street, MS-89, Sacramento, CA 95814.

Z.C. Roadway

CONTRACT CHANGE ORDER

Change Requested by: Engineer

CCO 28	Suppl. No. 0	Contract No. 04 - 0120L4	Road ALA-80-1.6/2.7	FED. AID LOC.: NO FED AID

M C M CONSTRUCTION INC

You are directed to make the following changes from the plans and specifications or do the following described work not included in the plans and specifications for this contract. ***NOTE: This change order is not effective until approved by the Engineer.***

Description of work to be done, estimate of quantities and prices to be paid. (Segregate between additional work at contract price, agreed price and force account.) Unless otherwise stated, rates for rental of equipment cover only such time as equipment is actually used and no allowance will be made for idle time. This last percentage shown is the net accumulated increase or decrease from the original quantity in the Engineer's Estimate.

Make modifications to electrical work as shown sheets 3 of 15 through 15 of 15 of this CCO.

Extra Work at Lump Sum:

Revise electrical plans as follows:

1. Sheet E-109:
- Change sections D1-D1 and D3-D3 of the duct banks between MH-6 to MH-10 and MH-8 to MH-12 from rectangular to round configuration.
- Add conduits designated as 0323, 0326, 0325 and 0328 in sections D1-D1 and D3-D3 between MH-8 to MH-12.
- Add 500 Kcmil GND and 4/0 AWG GND to section D2-D2.

2. Sheet E-198, Note #5:
Temporary 310 W HPS shall be installed after the completion of the MRDTR.

3. Sheets E-198 and E-199:
High Mast Lighting Standards shall remain in place. The High Mast Lights shall remain functional throughout the duration of the contract.

4. Sheet E-127:
Change the breaker designation for directional relay to 52-18N.

5. Sheet E-110:
Replace PVC spacers with rigid galvanized steel.

6. Sheet E-204,:
"Preformed Loop Schedule," revise stationing from E 84+15 to W 84+15, E 86+13 to W 86+13 and W 83+86 to E 83+86

7. Sheets # E-185, E-186, E-189, E-190, E193 and E194:
- CMS 65, CMS 65 controller cabinet and service enclosure shall remain in place.
- Magnetometer and inductive loops detectors shall not to be abandoned and shall be kept functional..
- Foundations, conduits and pullboxes shall be installed for the future relocation of CMS 65 controller cabinet and service enclosure.

8. Add wireless CCTV equipment for CCTV-945 (Sheet E-185) and CCTV-943 (Sheet E-190) as follows:
2 each Vbrick 9174-4200 encoder;
2 each Junction Box JB-110e with Cingular GT Max wireless card;
2 each AP8500/18000-S antenna with MC card adapter.

For this work, the contractor will be paid the sum of $76,636.61. This sum constitutes full compensation, including markups, for this change.

Estimated cost of Extra Work at Lump Sum $76,636.61

CONTRACT CHANGE ORDER

Change Requested by: Engineer

CCO 28	Suppl. No. 0	Contract No. 04 - 0120L4	Road ALA-80-1.6/2.7	FED. AID LOC.: NO FED AID

Estimated Cost: Increase ☑ Decrease ☐ $76,636.61

By reason of this order the time of completion will be adjusted as follows: 0 days

Submitted by

Signature	Resident Engineer BEN GHAFGHAZI	Date 1/10/08

Approval Recommended by

Signature	Construction Engineer Ben Ghafghazi	Date 1/10/08

Engineer Approval by

Signature	Construction Manager Amer Bata	Date 2/26/08

We the undersigned contractor, have given careful consideration to the change proposed and agree, if this proposal is approved, that we will provide all equipment, furnish the materials, except as may otherwise be noted above, and perform all services necessary for the work above specified, and will accept as full payment therefor the prices shown above.

NOTE: If you, the contractor, do not sign acceptance of this order, your attention is directed to the requirements of the specifications as to proceeding with the ordered work and filing a written protest within the time therein specified.

Contractor Acceptance by

Signature	(Print name and title) EDMUNDO A. PUCHI, TREASURER	Date 2/13/08

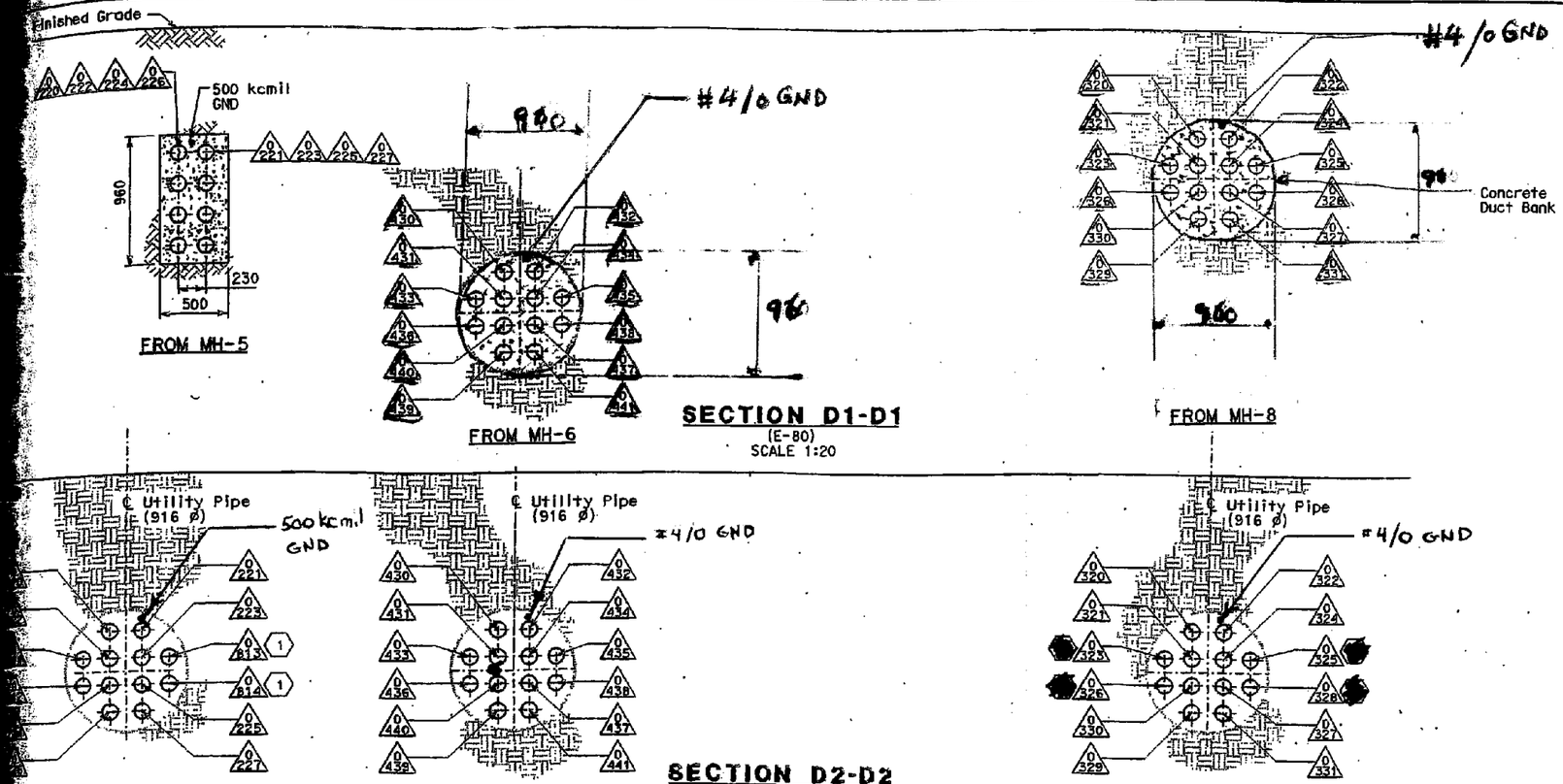

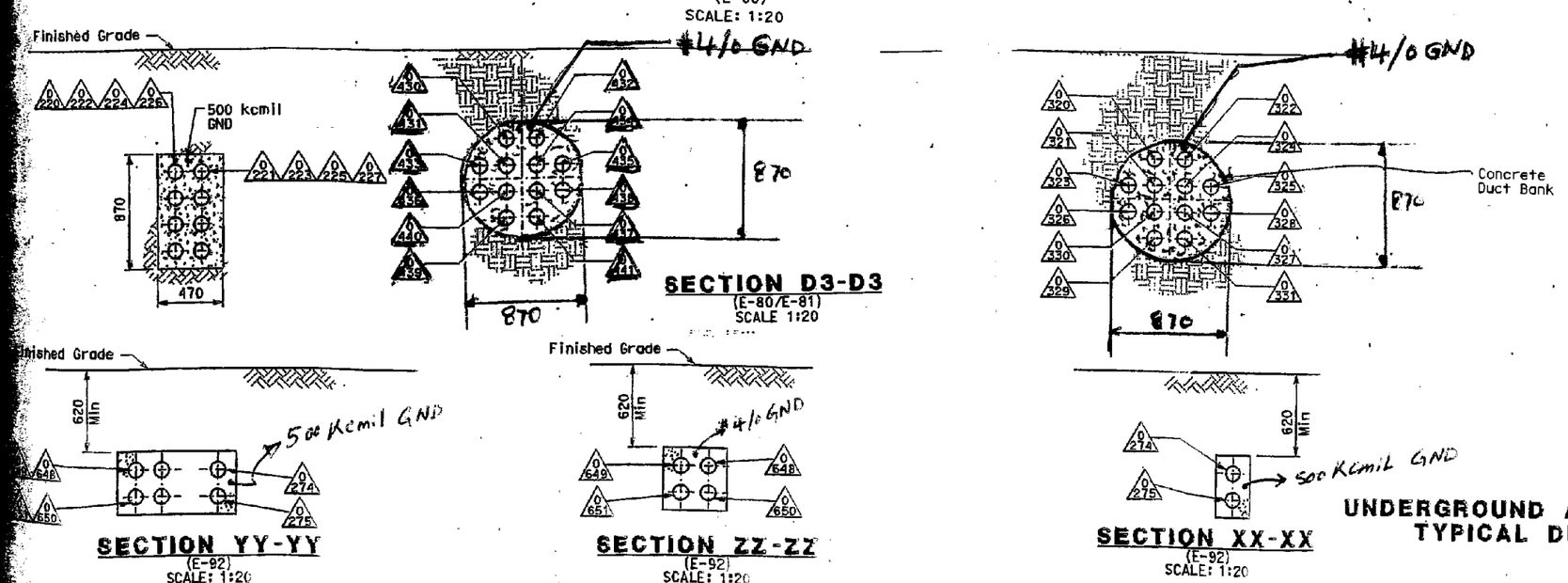

DIST	COUNTY	ROUTE	KILOMETER POST TOTAL PROJECT	SHEET No	TOTAL SHEETS
04	Ala	80	1.6/2.7	480	643

REGISTERED ELECTRICAL ENGINEER 05/15/06 DATE

1-29-07
PLANS APPROVAL DATE

REGISTERED PROFESSIONAL ENGINEER JENS ERLINGSSON No. 8248 Exp. 9/30/08 ELECTRICAL STATE OF CALIFORNIA

PB POWER, Inc.
A Parsons Brinckerhoff Company
303 Second St., Suite 700N
San Francisco, CA 94107-1317

The State of California or its officers or agents shall not be responsible for the accuracy or completeness of electronic copies of this plan sheet.

To get to the caltrans web site, go to http://www.dot.ca.gov

NOTES:

1. References:
   - For location of manholes where these section cuts are taken, see sheets E-80 and E-92.
   - For manhole plans and sections, see sheets starting at E-111.
   - For typical manhole and duct bank details, see sheet E-119.
   - For conduit and cable tray schedules, see sheets starting at E-224.

SHEET NOTES:

(1) Conduit ends of spare conduit shall be capped.

REGISTERED PROFESSIONAL ENGINEER FARVIZ BOOZARPOUR No. 12735 Exp. 9/30/08 ELECTRICAL STATE OF CALIFORNIA

C.C.O. No.: 28
Suppl. No.:
Contract No. 04-012064
Sheet of 3 of 15
Date: 1/8/08

DETAILS
UNDERGROUND AND ROADWAY AT-GRADE TYPICAL DUCT BANK SECTIONS
SCALE AS NOTED

REVISION 10-00 DATE 31-JAN-2007 Fri 13:43

DIST	COUNTY	ROUTE	KILOMETER POST TOTAL PROJECT	SHEET NO	TOTAL SHEETS
04	Ala	80	1.6/2.7	569	643

Carol Light 05/15/06
REGISTERED ELECTRICAL ENGINEER DATE

1-29-07
PLANS APPROVAL DATE

REGISTERED PROFESSIONAL ENGINEER CAROL LIGHT No. 10145 Exp. 09/30/07 ELECTRICAL STATE OF CALIFORNIA

SILVERMAN & LIGHT
1201 PARK AVENUE - SUITE 100
EMERYVILLE, CA 94608-3632

The State of California or its officers or agents shall not be responsible for the accuracy or completeness of electronic copies of this plan sheet.

To get to the Caltrans web site, go to: http://www.dot.ca.gov

Caltrans Metric

SHEET NOTES:

1. Existing 70C, 3#6 (480 V, Lighting ckt 272)
   3#6 (480 V, Lighting ckt 272)
2. Disconnect existing High Mast standard from existing circuit (ckt 272) When High Mask Lighting is install and energized.
3. Protect existing conduit conductors and pull box during construction.
4. Install temporary riser and conduit (Size as indicated on plan) on temporary wood pole. Install riser conduit into existing manhole (Verify in field for exact location) and splice temporary conductors to existing conductors (ckt 272) in existing pull box.
5. Install temporary 310 W HPS, 480 V luminaire on wood pole and put into operation ~~at the start of the construction~~ after MRDTR completion. Remove when directed by the Engineer. See detail on E-200.
6. Install temporary 10 mm messenger wire with 2#6 (480 V, Lighting). Extend temporary power aerially along temporary poles. Remove when directed by the Engineer.
7. Existing to remain in place and to be used as temporary lighting for construction. Remove as shown on contract plans when directed by the Engineer.

NOTES:

1. For Notes, Abbreviations and Legends, see E-9.
2. References:
   - for conduit schedules see sheet starting at E-224.
3. All temporary Underground and Roadway At-Grade work is to remain in place at the end of the contract.

REGISTERED PROFESSIONAL ENGINEER PARVIZ BOOZARPOUR No. 12735 Exp. 9/30/08 ELECTRICAL STATE OF CALIFORNIA

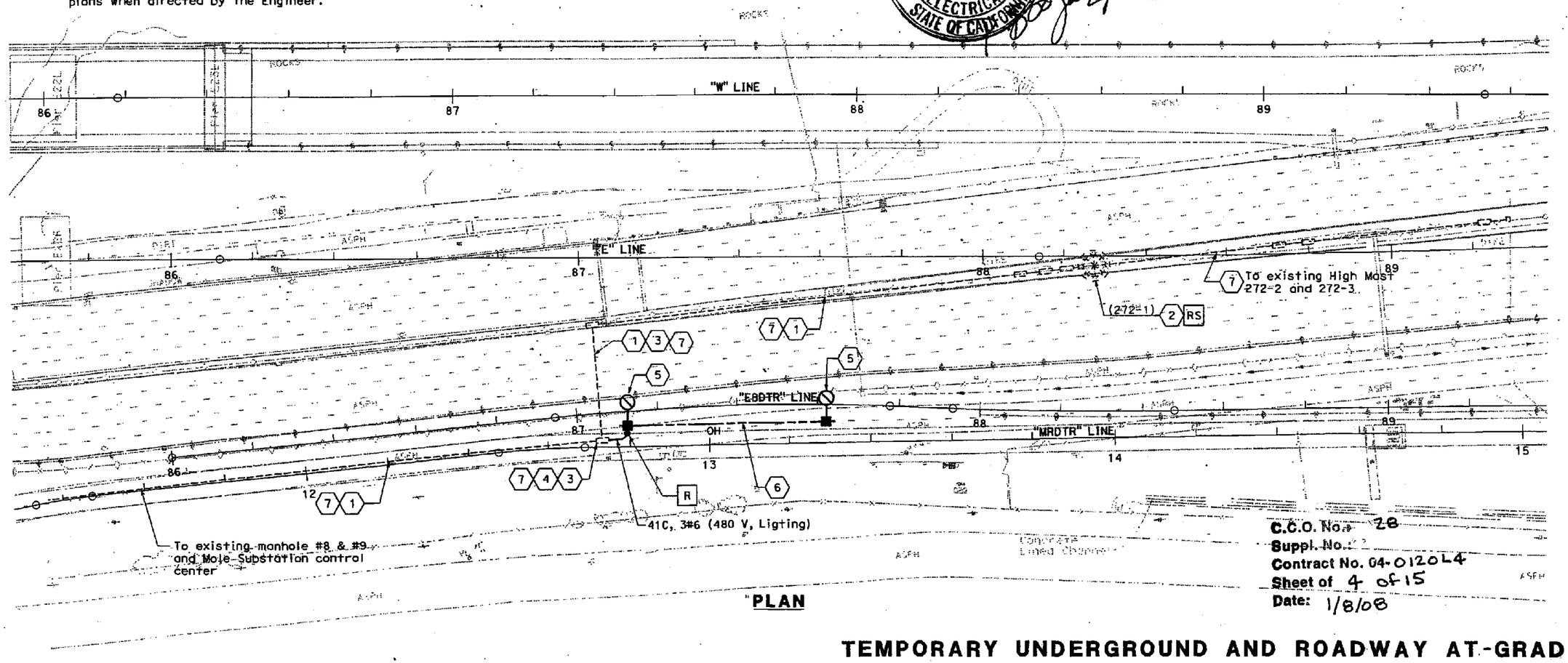

C.C.O. No.: 28
Suppl. No.:
Contract No. 04-0120L4
Sheet of 4 of 15
Date: 1/8/08

"PLAN

TEMPORARY UNDERGROUND AND ROADWAY AT-GRADE
(HIGH MAST LIGHTING)

SCALE: 1:500

THIS PLAN ACCURATE FOR ELECTRICAL WORK ONLY

ALL DIMENSIONS ARE IN METERS UNLESS OTHERWISE SHOWN

E-198

CALCULATED/DESIGNED BY	BJ	DATE 2/9/06	REVISED BY
CHECKED BY	CL	2/9/06	DATE REVISED

DESIGN OVERSIGHT: Behzad Golemohammadi

STATE OF CALIFORNIA - DEPARTMENT OF TRANSPORTATION
Caltrans

LAST REVISION 00-00-00 | DATE PLOTTED => 31-JAN-2007 | TIME PLOTTED => 15:47

FOR REDUCED PLANS ORIGINAL SCALE IS IN MILLIMETERS: 0 20 40 60 80

DGN FILE => 40120lua198.dgn
USERNAME => trohils

CU 04251 | EA 0120L1

DIST	COUNTY	ROUTE	KILOMETER POST TOTAL PROJECT	SHEET No	TOTAL SHEETS
04	Ala	80	1.6/2.7	569	643

Carol Light 05/15/06
REGISTERED ELECTRICAL ENGINEER DATE

1-29-07
PLANS APPROVAL DATE

REGISTERED PROFESSIONAL ENGINEER CAROL LIGHT No. 10145 Exp. 09/30/07 ELECTRICAL STATE OF CALIFORNIA

SILVERMAN & LIGHT
1201 PARK AVENUE - SUITE 100
EMERYVILLE, CA 94608-3632

The State of California or its officers or agents shall not be responsible for the accuracy or completeness of electronic copies of this plan sheet.

To get to the Caltrans web site, go to: http://www.dot.ca.gov

Caltrans Metric

SHEET NOTES:

1. Existing 70C, 3#6 (480 V, Lighting ckt 272)
   3#6 (480 V, Lighting ckt 272)
2. ~~Disconnect existing High Mast standard from existing Circuit (ckt 272). When High Mast Lighting is install and energized.~~
3. Protect existing conduit conductors and pull box during construction.
4. Install temporary riser and conduit (Size as indicated on plan) on temporary wood pole. Install riser conduit into existing manhole (Verify in field for exact location) and splice temporary conductors to existing conductors (ckt 272) in existing pull box.
5. Install temporary 310 W HPS, 480 V luminaire on wood pole and put into operation at the start of the construction. Remove when directed by the Engineer. See detail on E-200.
6. Install temporary 10 mm messenger wire with 2#6 (480 V, Lighting). Extend temporary power aerially along temporary poles. Remove when directed by the Engineer.
7. Existing to remain in place and to be used as temporary lighting for construction. Remove as shown on contract plans when directed by the Engineer.

NOTES:

1. For Notes, Abbreviations and Legends, see E-9.
2. References:
   - for conduit schedules see sheet starting at E-224.
3. All temporary Underground and Roadway At-Grade work is to remain in place at the end of the contract.

REGISTERED PROFESSIONAL ENGINEER PARVIZ BOOZARPOUR No. 12735 Exp. 9/30/08 ELECTRICAL STATE OF CALIFORNIA

Existing High Mast Lighting standard shall be maintained in effective operational During the Entire Project.

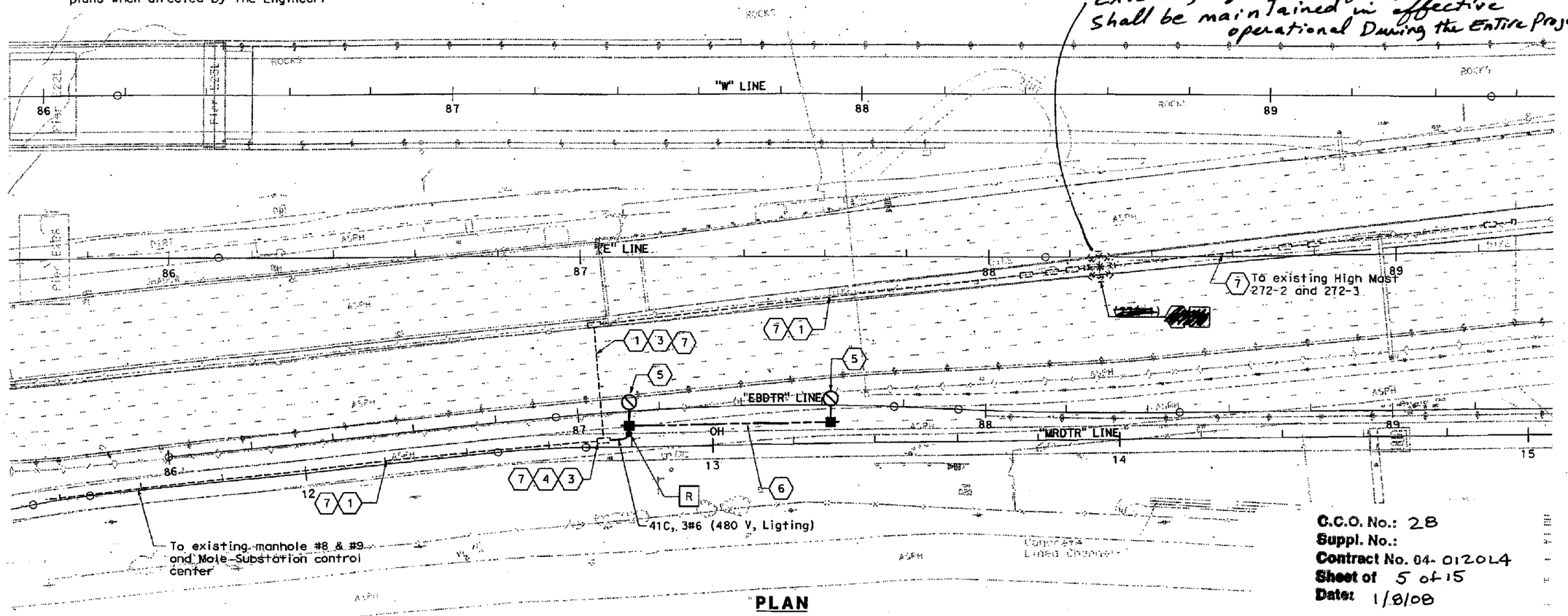

C.C.O. No.: 28
Suppl. No.:
Contract No. 04-0120L4
Sheet of 5 of 15
Date: 1/8/08

PLAN

TEMPORARY UNDERGROUND AND ROADWAY AT-GRADE
(HIGH MAST LIGHTING)

SCALE: 1:500

THIS PLAN ACCURATE FOR ELECTRICAL WORK ONLY

ALL DIMENSIONS ARE IN METERS UNLESS OTHERWISE SHOWN

E-198

CALCULATED/DESIGNED BY	BJ	DATE 2/9/06	REVISED BY
CHECKED BY	CL	2/9/06	DATE REVISED

DESIGN OVERSIGHT: Behzad Golemohammadi

STATE OF CALIFORNIA / DEPARTMENT OF TRANSPORTATION — Caltrans

LAST REVISION 00-00-00 | DATE PLOTTED => 31-JAN-2007 | TIME PLOTTED => 15:47

FOR REDUCED PLANS ORIGINAL SCALE IS IN MILLIMETERS 0 20 40 60 80

DGN FILE => 40120lua198.dgn
USERNAME => trphils

CU 04251 | EA 0120L1

DIST	COUNTY	ROUTE	KILOMETER POST TOTAL PROJECT	SHEET NO	TOTAL SHEETS
04	Ala	80	1.6/2.7	570	643

Carol Light 05/15/06
REGISTERED ELECTRICAL ENGINEER DATE

1-29-07
PLANS APPROVAL DATE

REGISTERED PROFESSIONAL ENGINEER CAROL LIGHT No. 10145 Exp. 09/30/07 ELECTRICAL STATE OF CALIFORNIA

SILVERMAN & LIGHT
1201 PARK AVENUE - SUITE 100
EMERYVILLE, CA 94608-3632

The State of California or its officers or agents shall not be responsible for the accuracy or completeness of electronic copies of this plan sheet.

To get to the Caltrans web site, go to: http://www.dot.ca.gov

Caltrans Metric

SHEET NOTES:

(1) Existing High Mast Lighting Standard shall be maintained in effective operational ~~and illuminated (Not High Mast Standard) & installed and functional~~. During the Entire Project.

(2) Existing to remain in place and to be used as temporary lighting for construction. Remove as shown on contract plans when directed by the Engineer.

NOTES:

1. For Notes, Abbreviations and Legends, see E-9.
2. References:
   - for conduit schedules see sheet starting at E-224.
3. All Temporary Underground and Roadway At-Grade work is to remain in place at the end of the contract.

REGISTERED PROFESSIONAL ENGINEER PARVIZ BOOZARPOUR No. 12735 Exp. 9/30/08 ELECTRICAL STATE OF CALIFORNIA

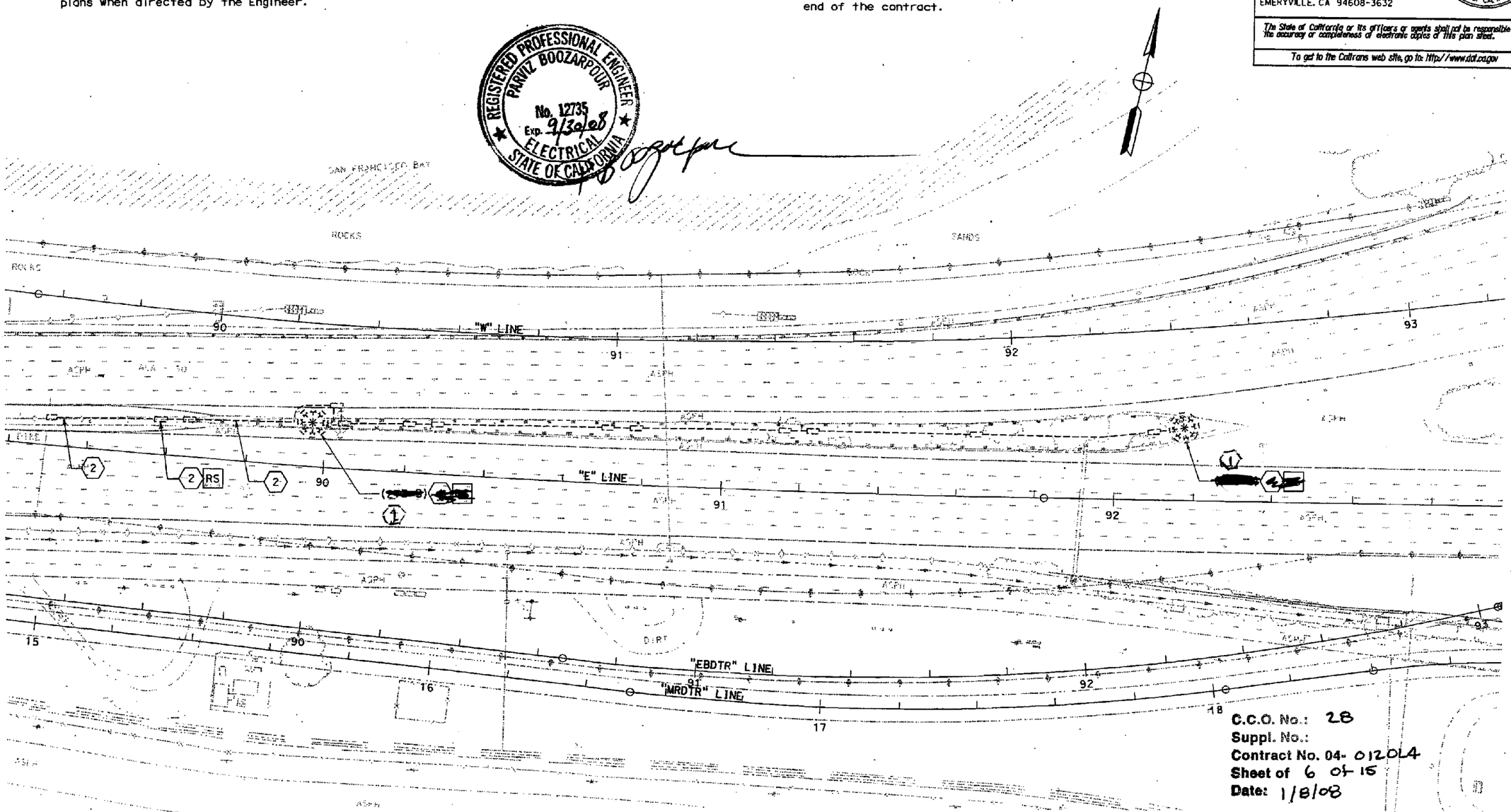

PLAN

TEMPORARY UNDERGROUND AND ROADWAY AT-GRADE

(HIGH MAST LIGHTING)

SCALE 1:500

ALL DIMENSIONS ARE IN METERS UNLESS OTHERWISE SHOWN

THIS PLAN ACCURATE FOR ELECTRICAL WORK ONLY

E-199

DATE	REVISED BY	DATE	REVISED

CALCULATED/DESIGNED BY: BJ 2/9/06
CHECKED BY: CL 2/9/06

DESIGN OVERSIGHT: Behzad Golemohammadi

STATE OF CALIFORNIA - DEPARTMENT OF TRANSPORTATION
Caltrans

LAST REVISION 00-00-00
DATE PLOTTED => 31-JAN-2007
TIME PLOTTED => 16:04

FOR REDUCED PLANS ORIGINAL SCALE IS IN MILLIMETERS 0 20 40 60 80

DGN FILE => 40120lua199.dgn
USERNAME => trmnguye

CU 04251 | EA 0120L1

DIST	COUNTY	ROUTE	KILOMETER POST TOTAL PROJECT	SHEET No	TOTAL SHEETS
04	Ala	80	1.6/2.7	498	643

REGISTERED ELECTRICAL ENGINEER 05/15/06 DATE

1-29-07
PLANS APPROVAL DATE

PB POWER, Inc.
A Parsons Brinckerhoff Company
303 Second St., Suite 700N
San Francisco, CA 94107-1317

REGISTERED PROFESSIONAL ENGINEER JENS ERLINGSSON No. 8249 Exp. 9/30/08 ELECTRICAL STATE OF CALIFORNIA

The State of California or its officers or agents shall not be responsible for the accuracy or completeness of electronic copies of this plan sheet.

To get to the Caltrans web site, go to http://www.dot.ca.gov

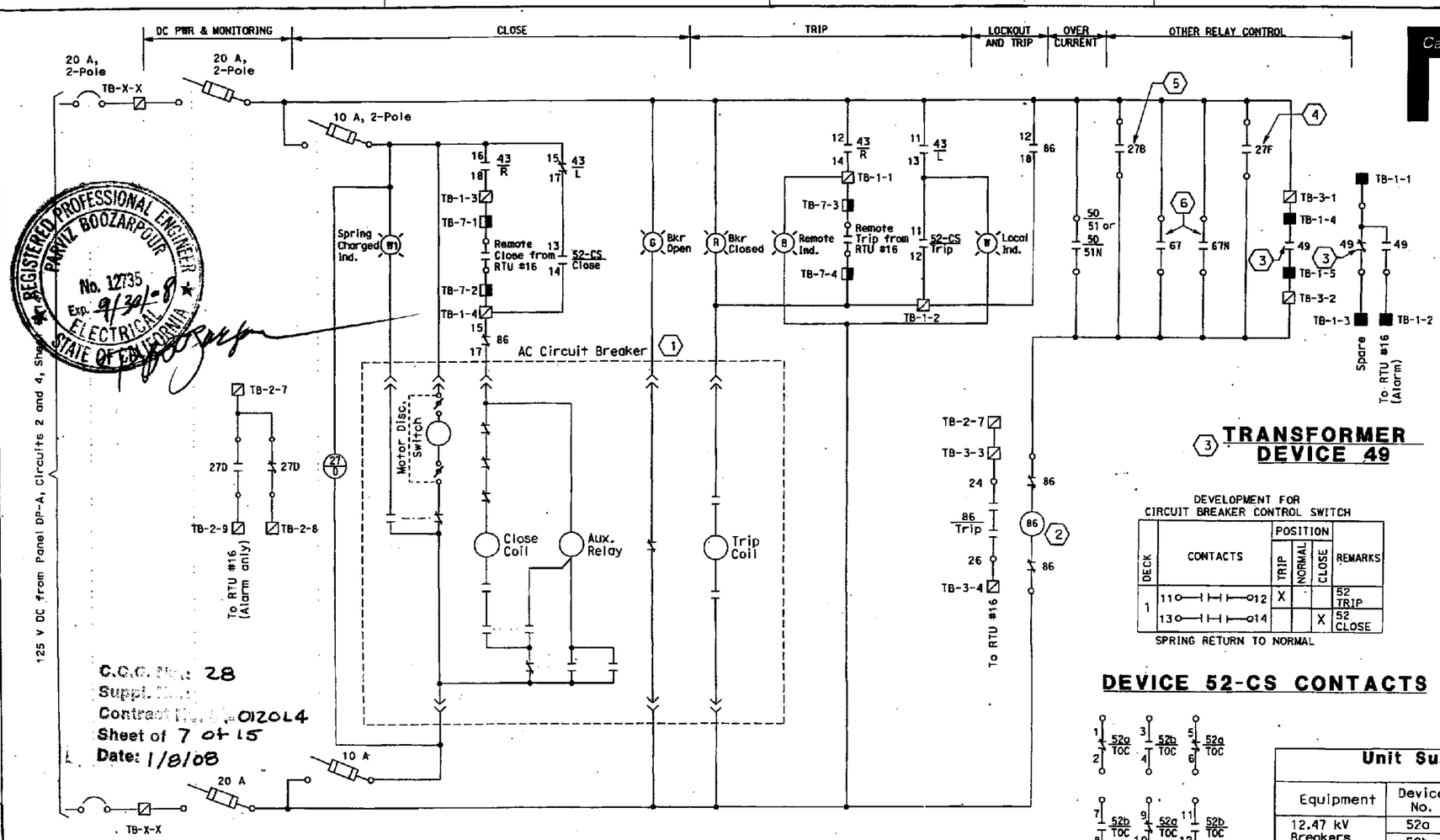

⑦ 12.47 kV CIRCUIT BREAKER ELEMENTARY DIAGRAM

③ TRANSFORMER DEVICE 49

DEVELOPMENT FOR CIRCUIT BREAKER CONTROL SWITCH

DECK	CONTACTS	POSITION TRIP	POSITION NORMAL	POSITION CLOSE	REMARKS
1	11 — 12	X			52 TRIP
	13 — 14			X	52 CLOSE

SPRING RETURN TO NORMAL

DEVICE 52-CS CONTACTS

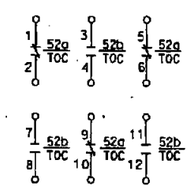

BKR 52-TOC CONTACTS

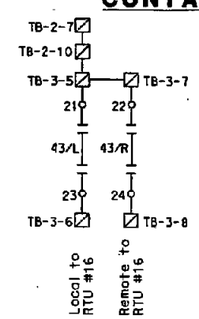

NOTES:

① 12.47 kV circuit breaker contacts are shown with the breaker in open position.

② Device 86 Lock-out relay contacts and wiring are shown in reset position.

③ Device 49, Transformer Over-Temperature, is required only for 12.47 kV circuit breaker 52-20N, See sheet E-144.

④ Device 27F Feeder Undervoltage relay and wiring is not required for 12.47 kV circuit breakers 52-17N, 52-18N and 52-19N only.

⑤ Device 27B Bus Undervoltage relay and wiring is required for 12.47 kV circuit breaker 52-20N only.

⑥ Device 67 and 67N Directional Overcurrent relays and wiring are required for 12.47 kV circuit breakers 52-17N, 52-18N, 52-19N and 52-18NT only.

⑦ Elementary diagram is typical with exceptions noted for breakers 52-17N, 52-18N, 52-19N, 52-20N and ~~52-18NT~~ 52-18N.

NOTES:

1. References:
   - For unit substation connection diagrams, see sheets E-139, E-140, E-143 and E-144.
   - For single line diagram, see sheet E-126.
   - For RTU #16 wiring diagrams, see sheets E-156 thru E-158.

Unit Substation SCADA Inputs/Outputs (To RTU #16)

	Equipment	Device No.	Description	Digital Input	Digital Output	Low Level Com.
	12.47 kV Breakers 52-17N 52-18N 52-19N 52-20N 52-21N	52a	Breaker Open	1		
		52b	Breaker Closed	1		
		52a	Breaker Open		1	
		52b	Breaker Closed		1	
		27D	DC Undervoltage	1		
		86	Lock-out Relay	1		
④		27F	Feeder Undervoltage	1		
		43 L/R	Local/Remote	2		
		(SSPP) 50/51 50/51N	Overcurrent	1		
		MM	3-phase amps			1
			Power Factor			1
			Kilowatt			1
			Kilovars			1
③	Transformer	49	Over-temperature	1		
⑤	12.47 kV Swgr	27B	12.47 kV Bus Undervoltage	1		
	480 V Swgr	27UV	480 V Bus Undervoltage	1		

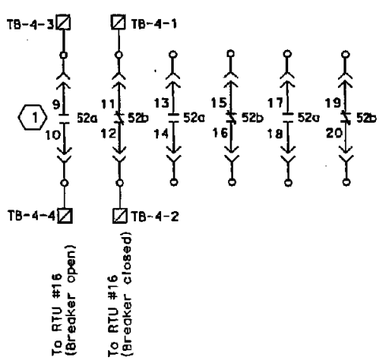

BKR 52 CONTACTS

DEVELOPMENT FOR LOCKOUT RELAY (MANUALLY RESET)

DECK	CONTACTS	POS. TRIP	POS. RESET	REMARKS
1	11 — 13		X	SPARE
	12 — 18	X		52 TRIP
	15 — 17		X	52 CLOSE
	14 — 16	X		SPARE
2	21 — 23		X	SPARE
	22 — 28	X		SPARE
	25 — 27		X	SPARE
	24 — 26	X		To RTU #16

DEVICE 86 CONTACTS

DEVELOPMENT FOR LOCAL - REMOTE CONTROL SWITCH

DECK	CONTACTS	POS. LOCAL	POS. REMOTE	
1	11 — 13	X		52 TRIP
	12 — 14		X	52 TRIP
	15 — 17	X		52 CLOSE
	16 — 18		X	52 CLOSE
2	21 — 23	X		TO RTU #16
	22 — 24		X	To RTU #16
	25 — 27	X		SPARE
	26 — 28		X	SPARE

DEVICE 43 L/R CONTACTS

DETAILS
MOLE SUBSTATION ELECTRICAL
12.47 kV CIRCUIT BREAKER ELEMENTARY DIAGRAM
NO SCALE

E-127

REGISTERED PROFESSIONAL ENGINEER PARVIZ BOOZARPOUR No. 12735 Exp. 9/30/08 ELECTRICAL STATE OF CALIFORNIA

	DATE	REVISED BY	DATE REVISED
CALCULATED/DESIGNED BY	AB 2/06	FK	2/06
CHECKED BY			
DESIGN OVERSIGHT	BEHZAD GOLEMOHAMMADI		

STATE OF CALIFORNIA - DEPARTMENT OF TRANSPORTATION
Caltrans

DATE PLOTTED => 31-JAN-2007
TIME PLOTTED => 14:00

LAST REVISION 00-00-00

FOR REDUCED PLANS ORIGINAL SCALE IS IN MILLIMETERS 0 20 40 60 80

DGN FILE => 40120lua127.dgn
USERNAME => trmariak

CU 04251 EA 012014

DIST	COUNTY	ROUTE
04	Ala	80

REGISTERED ELECTRICAL ENGINEER

1-29-07
PLANS APPROVAL DATE

PB POWER, Inc.
A Parsons Brinckerhoff Company
303 Second St., Suite 700N
San Francisco, CA 94107-1317

The State of California or its officers or agents shall not be responsible for the accuracy or completeness of electronic copies of this document.

To get to the caltrans web site, go to: www.dot.ca.gov

Caltrans Metric

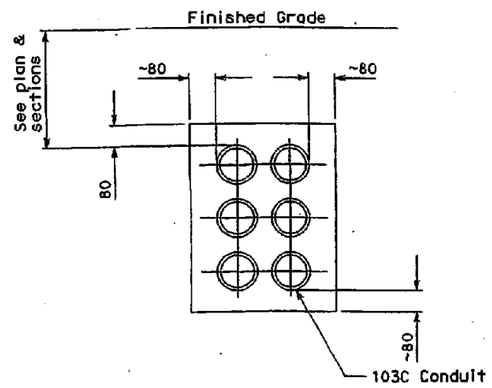

SECTION A-A

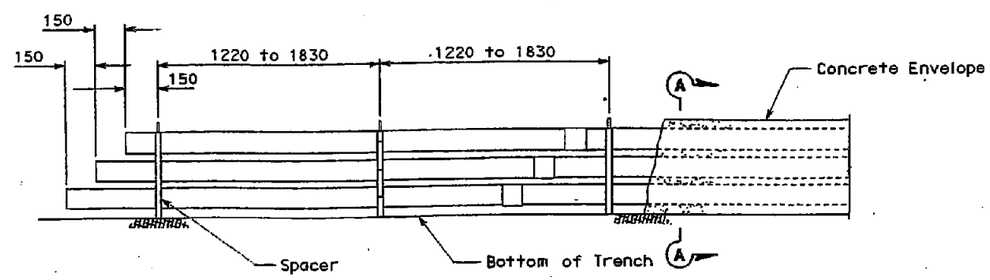

FRONT VIEW

TYPICAL STRAIGHT RUN INSTALLATION

(103 mm Conduit 6-Way Shown)

C.C.O. No.:
Suppl. No.:
Contract No.:
Sheet of
Date:

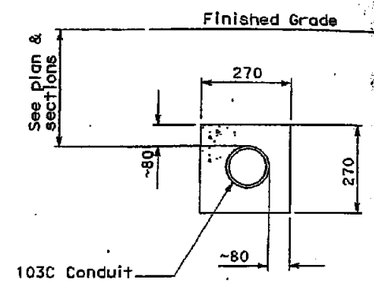

SINGLE DUCT

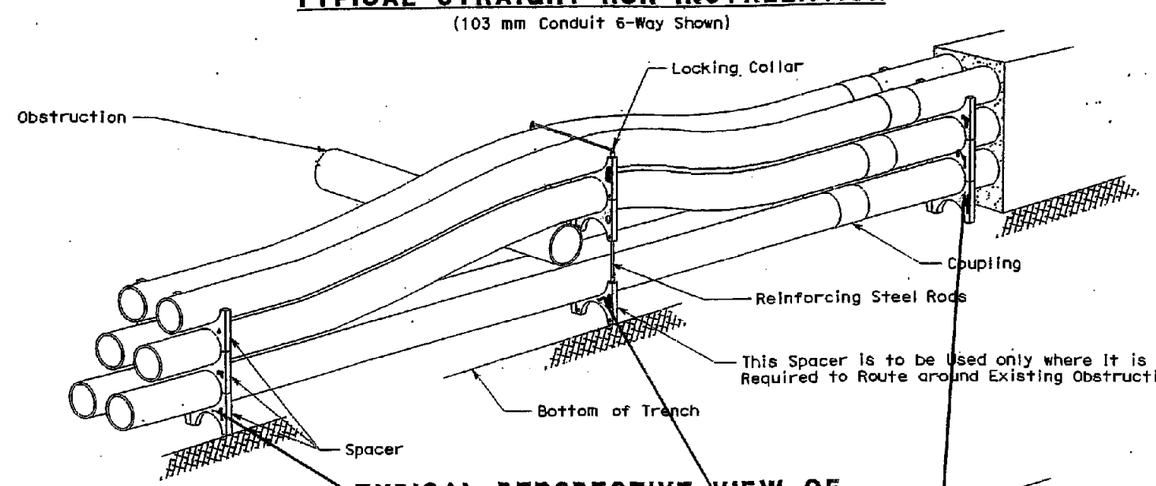

TYPICAL PERSPECTIVE VIEW OF INSTALLATION AROUND OBSTRUCTION

REGISTERED PROFESSIONAL ENGINEER
PARVIZ BOOZARPOUR
No. 12735
Exp. 9/30/08
ELECTRICAL
STATE OF CALIFORNIA

Boozarpour

GENERAL NOTES:

1. Quantities are approximate and include 10% added for variations encountered in Construction.
2. Where width of Trench is greater than the required width of the Envelope, the horizontal spacing between Conduits may be increased as long as 80 mm spacing between Conduit and outside edge of Envelope is Maintained.
3. For typical duct bank detail, see sheet E-119.

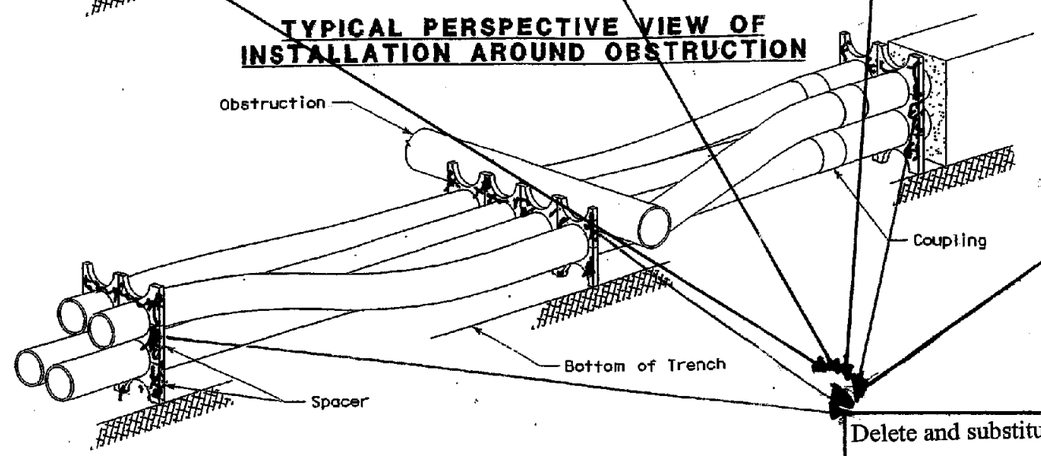

TYPICAL PERSPECTIVE VIEW OF INSTALLATION UNDER OBSTRUCTION

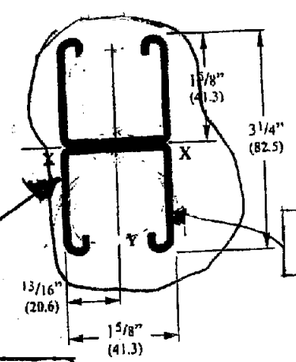

Rigid galvanized steel

Delete and substitute the indicated spacers

C.C.O. No.: 28
Suppl. No.:
Contract No. 04-0120L4
Sheet of 8 of 15
Date: 1/8/08

DETAILS
UNDERGROUND AND ROADWAY AT-GRADE TYPICAL DUCT BANK SECTIONS

NO SCALE

E-110

STATE OF CALIFORNIA - DEPARTMENT OF TRANSPORTATION

Caltrans

DESIGN OVERSIGHT: BEHZAD GOLEMOHAMMADI

CALCULATED/DESIGNED BY	FK	DATE 2/06	REVISED BY	DATE REVISED
CHECKED BY	AB	2/06		

ALL DIMENSIONS IN MILIMETERS UNLESS OTHERWISE SHOWN

FOR REDUCED PLANS ORIGINAL SCALE IS IN MILLIMETERS 0 20 40 60 80

DGN FILE =>40120lua110.dgn
USERNAME =>trnhills

CU 04251 | EA 0120L1

DIST	COUNTY	ROUTE	KILOMETER POST TOTAL PROJECT	SHEET No.	TOTAL SHEETS
04	Ala	80	1.6/2.7	575	643

REGISTERED ELECTRICAL ENGINEER 1-19-07

1-29-07
PLANS APPROVAL DATE

The State of California or its officers or agents shall not be responsible for the accuracy or completeness of electronic copies of this plan sheet.

REGISTERED PROFESSIONAL ENGINEER SEAN COUGHLIN No. 12221 Exp. 9/30/08 ELECTRICAL STATE OF CALIFORNIA

To get to the Caltrans web site, go to: http://www.dot.ca.gov

Caltrans Metric

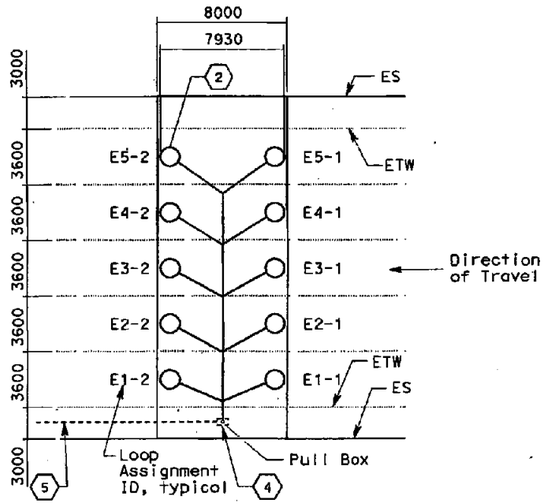

TYPICAL PREFORMED LOOP DETECTOR STATION CONFIGURATION

NO SCALE

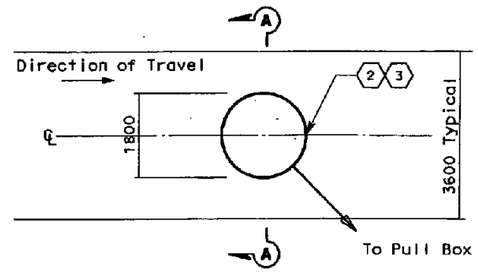

TYPICAL TYPE E LOOP DETECTOR PER LANE DETAIL

SEE SHEET ES-5B FOR ADDITIONAL DETAILS
NO SCALE

SHEET NOTES:

1. Modify No. 6 (T) pull box as shown.
2. Type E Preformed Loops
3. Loops shall be centered in each lane.
4. Loop wires will be coiled in pull box for future termination to DLC.
5. For conduit routing to service platform refer to Service Platform Reference Sheet listed in the Preformed Loop Schedule. Future DLC cable shall be routed through this conduit to the appropriate cabinet identified in the Preformed Loop Schedule.

LOOP ASSIGNMENT ID

E 4-1

- First row of loops
- Lone number
- Direction
  - E-Eastbound
  - W- Westbound

PREFORMED LOOP SCHEDULE

	STATION	CABINET ID #	SERVICE PLATFORM REFERENCE SHEET	NO. OF LANES
PL-W08 W	~~E~~ 84+15	TOS-22WA	E-20	5
PL-W09 W	~~E~~ 86+13	TOS-23WA	E-21	5
PL-E09 E	~~W~~ 83+86	TOS-22EA	E-53	5
PL-W10	W 87+83			5
PL-W11	W 89+08			5

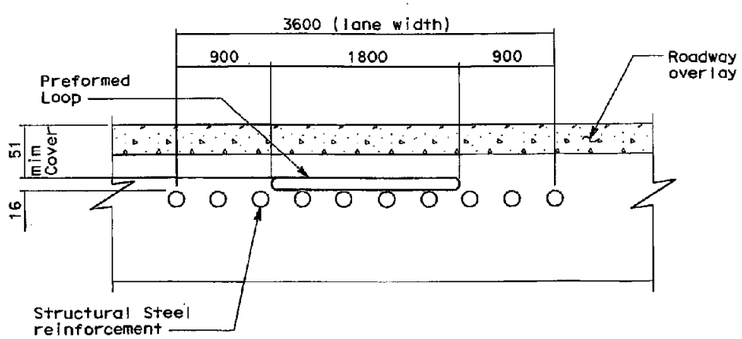

SECTION A-A

NO SCALE

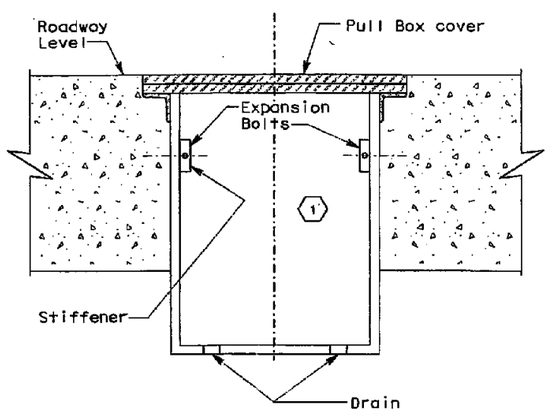

PULL BOX

NO SCALE

REGISTERED PROFESSIONAL ENGINEER PARVIZ BOOZARPOUR No. 12735 Exp. 9/30/08 ELECTRICAL STATE OF CALIFORNIA

C.C.O. No.: 28
Suppl. No.:
Contract No. 04-0120L4
Sheet of 9 of 15
Date: 1/8/08

DETAILS
TRAFFIC OPERATIONS SYSTEM
PREFORMED LOOP DETECTOR STATION INSTALLATION

SCALE AS NOTED

E-204

THIS PLAN IS ACCURATE FOR ELECTRICAL WORK ONLY

ALL DIMENSIONS IN MILLIMETERS UNLESS OTHERWISE SHOWN

RELATIVE BORDER SCALE IS IN MILLIMETERS 0 20 40 60 80

DGN FILE => 40120tua204.dgn
USERNAME => trmnguye

CU 04251 | EA 0120L1

LAST REVISION 00-00-00 | DATE PLOTTED => 31-JAN-2007 | TIME PLOTTED => 16:05

STATE OF CALIFORNIA - DEPARTMENT OF TRANSPORTATION | PROJECT ENGINEER SEAN COUGHLIN | CALCULATED/DESIGNED BY | CHECKED BY | DATE REVISED BY | DATE REVISED

G:\tjob\0120l1\resubmit\t01l903\40120tua204.dgn

Caltrans

DIST	COUNTY	ROUTE	KILOMETER POST TOTAL PROJECT	SHEET No.	TOTAL SHEETS
04	Ala	80	1.6/2.7	556	643

REGISTERED ELECTRICAL ENGINEER 05/15/06 DATE

1-29-07
PLANS APPROVAL DATE

REGISTERED PROFESSIONAL ENGINEER JENS ERLINGSSON No. 8249 Exp. 9/30/08 ELECTRICAL STATE OF CALIFORNIA

PB POWER, Inc.
A Parsons Brinckerhoff Company
303 Second St., Suite 700N
San Francisco, CA 94107-1317

The State of California or its officers or agents shall not be responsible for the accuracy or completeness of electronic copies of this plan sheet.

To get to the Caltrans web site, go to: http://www.dot.ca.gov

Caltrans Metric

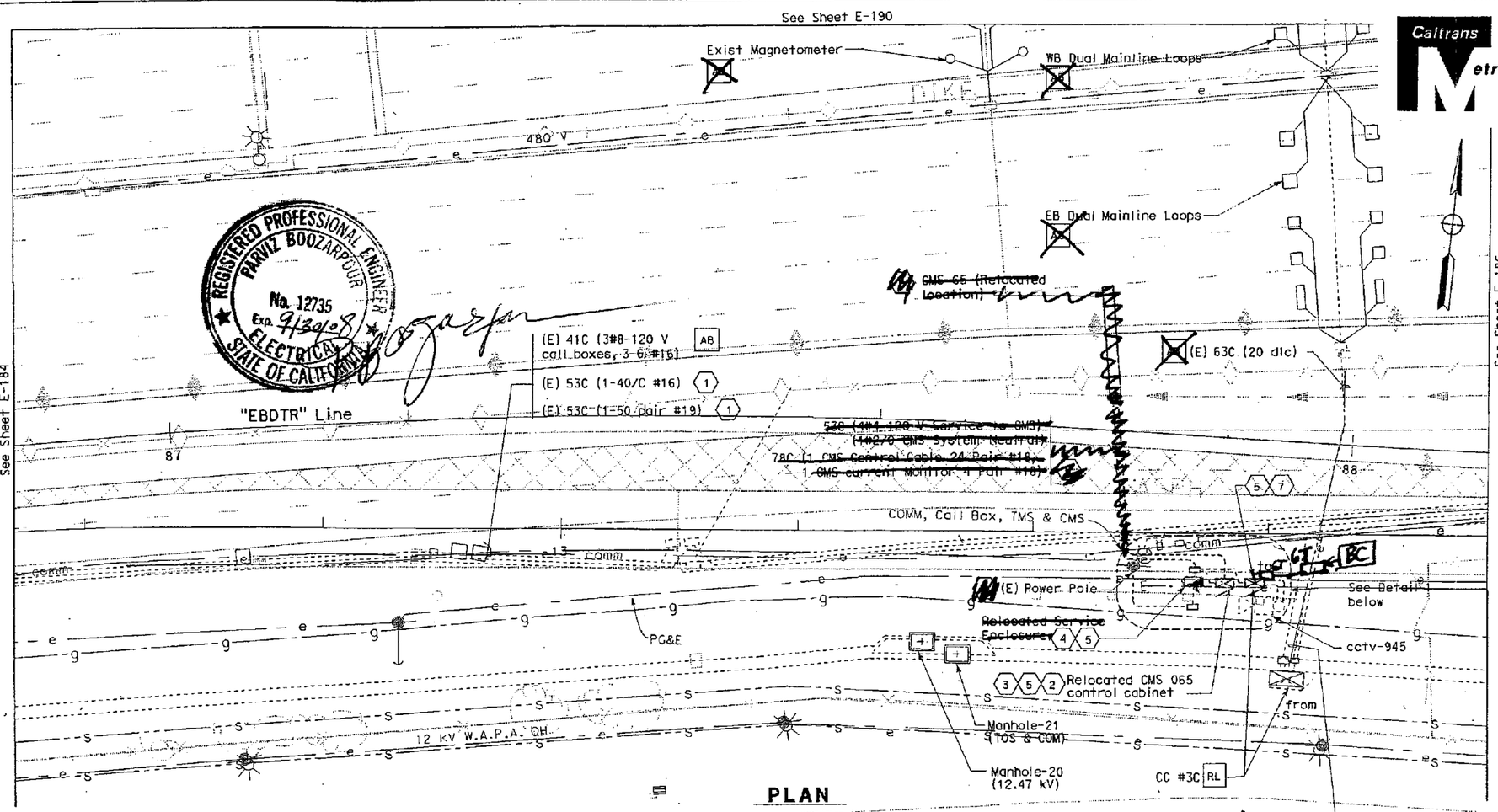

PLAN

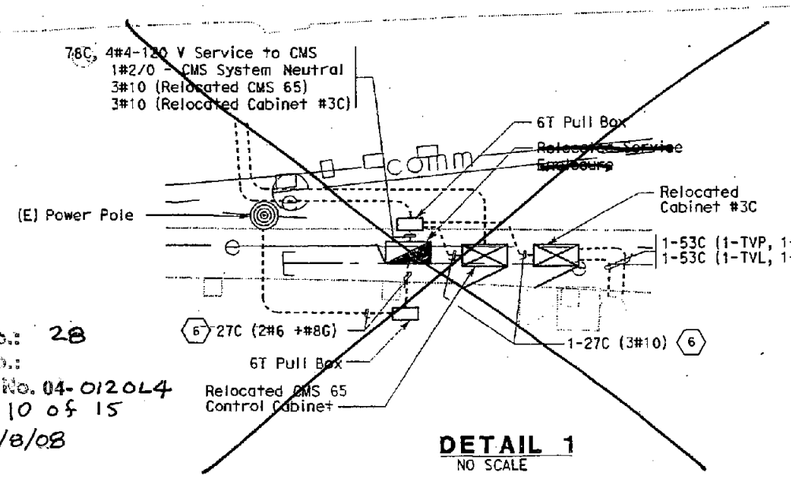

DETAIL 1
NO SCALE

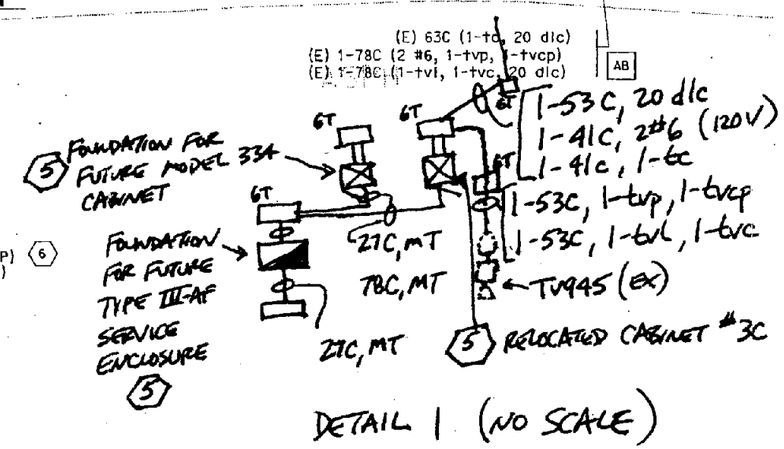

DETAIL 1 (NO SCALE)

SHEET NOTES:

1. Once the new duct bank has been completed and all cables have been installed and connected, these conduits shall be abandoned and the cables removed. Removed cables shall become the property of the contractor.
2. Controller cabinet shall be provided with wireless communication Type GPRS. See special provisions.
3. ~~Contractor to relocate (E) CMS 65 controller cabinet to location as shown on this sheet. For existing location, see sheet E-186 and E-193.~~
4. ~~Contractor to relocate (E) Service Panel enclosure Type III AF to location as shown on this sheet. For existing location, see E-193. Paid for under seperate bid item.~~
5. Contractor shall provide concrete foundation pads per Caltrans ES-2D and ES-3C Install conduits as required and connections per special provisions. ~~Paid for under seperate bid item~~.
6. Contractor to protect installation for duration as specified by the Engineer.
7. Controller cabinet shall be provided with wireless CCTV equipment.
8. ~~Contractor to provide riser conduit and connections to (E) 480 V 0/4 conductors. Install 0/4 non fusible disconnect switch.~~
9. ~~Relocation of CMS sign No. 65. Paid for under separate bid item.~~

NOTES:

1. References:
   - For underground and roadway at-grade, plans, manholes and duct bank sections, see sheets starting at E-80.
   - TOS equipment is shown for routing only. For details on when TOS equipment shall be installe, see special provisions.
2. Contractor shall locate all the existing equipment, conduits and pull boxes shown on plan prior to installing any new electrical item. Removed devices shall become the property of the contractor
3. Contractor shall verify exact location of existing gas and sewer outfall lines. For additional information, see utility plans.
4. All Temporary Underground and Roadway At-Grade work is to remain in place at the end of the contract.

C.O.O. No.: 28
Suppl. No.:
Contract No. 04-0120L4
Sheet of 10 of 15
Date: 1/8/08

TEMPORARY UNDERGROUND AND ROADWAY AT-GRADE
(LIGHTING AND ELECTRICAL SYSTEMS)

SCALE: 1:200

E-185

ALL DIMENSIONS ARE IN MILLIMETERS UNLESS OTHERWISE SHOWN

FOR REDUCED PLANS ORIGINAL SCALE IS IN MILLIMETERS 0 20 40 60 80

DGN FILE =>401201ug185.dgn
USERNAME =>trcarol

CU 04251 | EA 0120L1

LAST REVISION 00-00-00 | DATE PLOTTED => 06-FEB-2007 | TIME PLOTTED => 12:51

STATE OF CALIFORNIA - DEPARTMENT OF TRANSPORTATION
Caltrans

DESIGN OVERSIGHT BENZAD GOLEMOHAMMADI

CALCULATED/DESIGNED BY FK | CHECKED BY AB | DATE 2/06 REVISED BY | DATE 2/06 REVISED

DIST	COUNTY	ROUTE	KILOMETER POST TOTAL PROJECT	SHEET No	TOTAL SHEETS
04	Ala	80	1.6/2.7	557	643

REGISTERED ELECTRICAL ENGINEER 05/15/06 DATE

1-29-07
PLANS APPROVAL DATE

REGISTERED PROFESSIONAL ENGINEER JENS ERLINGSSON No. 8249 Exp. 9/30/08 ELECTRICAL STATE OF CALIFORNIA

PB POWER, Inc.
A Parsons Brinckerhoff Company
303 Second St., Suite 700N
San Francisco, CA 94107-1317

The State of California or its officers or agents shall not be responsible for the accuracy or completeness of electronic copies of this plan sheet.

To get to the Caltrans web site, go to: http://www.dot.ca.gov

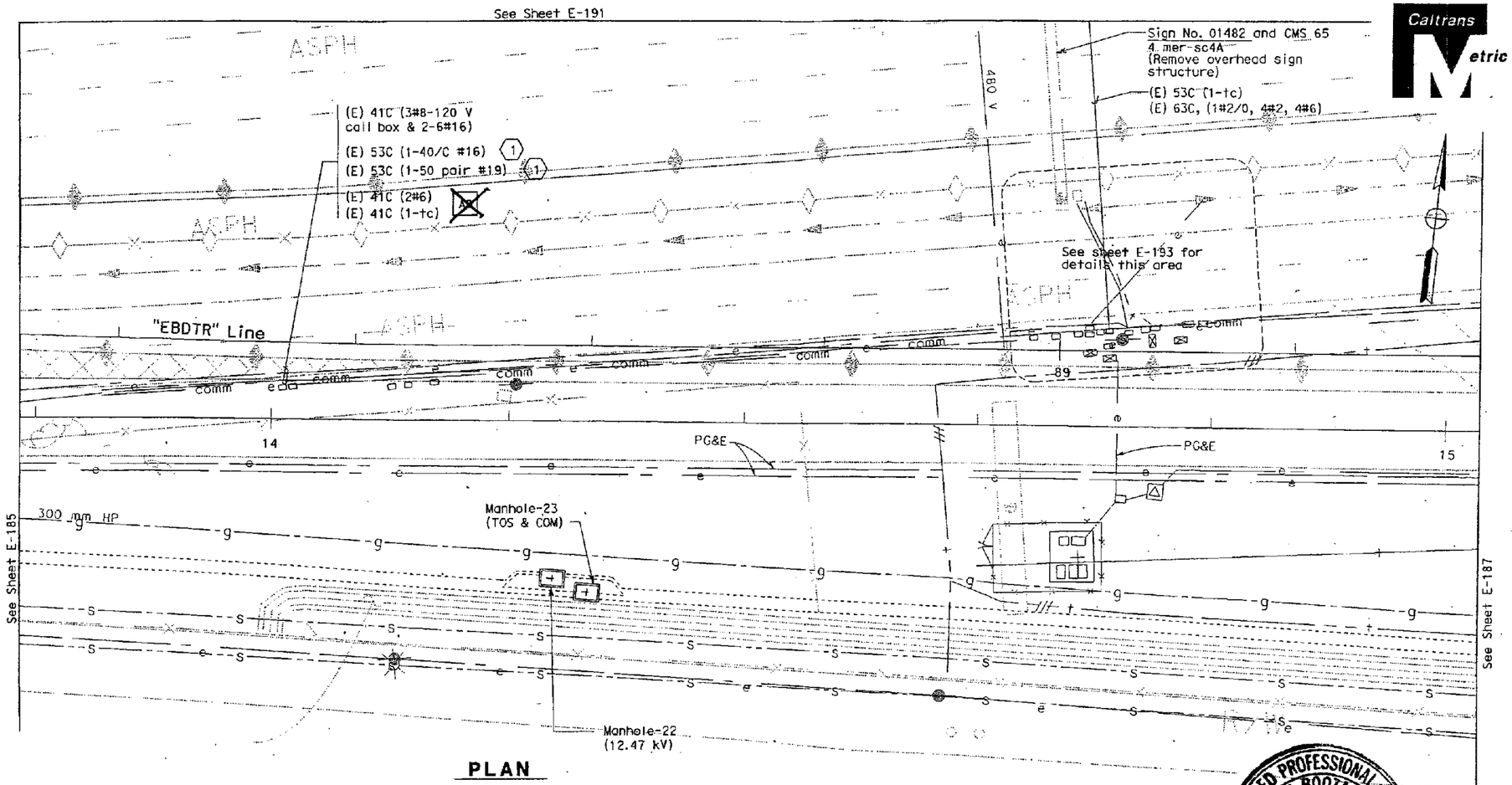

PLAN

C.C.O. No.: 28
Suppl. No.:
Contract No. 04-0120L4
Sheet of 11 of 15
Date: 1/8/08

REGISTERED PROFESSIONAL ENGINEER PARVIZ BOOZARPOUR No. 12735 Exp. 9/30/08 ELECTRICAL STATE OF CALIFORNIA

SHEET NOTES:

(1) Once the new duct bank has been completed and all cables have been installed and connected, these conduits shall be abandoned and the cables removed. Removed cables shall become the property of the contractor. Pull boxes shall be removed and become the property of the contractor.

NOTES:

1. References:
   - For underground and roadway at grade, plans, manholes, duct bank sections, see sheets E-80 thru E-122.
   - TOS equipment is shown for conduit routing only. For additional details on when TOS equipment shall be installed, see Special Provisions.
2. Contractor shall verify all existing installations prior to proceeding with new installation.
3. Contractor shall verify exact location of existing gas and sewer outfall lines. For additional information, see utility plans.
4. All Temporary Underground and Roadway At-Grade work is to remain in place at the end of the contract.

TEMPORARY UNDERGROUND AND ROADWAY AT-GRADE
(LIGHTING AND ELECTRICAL SYSTEMS)
SCALE: 1:200

E-186

THIS PLAN ACCURATE FOR ELECTRICAL WORK ONLY.

ALL DIMENSIONS ARE IN MILLIMETERS UNLESS OTHERWISE SHOWN

FOR REDUCED PLANS ORIGINAL SCALE IS IN MILLIMETERS 0 20 40 60 80

DGN FILE =>401201ue186.dgn
USERNAME =>trmikesl

CU 04251 EA 0120L1

LAST REVISION 00-00-00 DATE PLOTTED => 31-JAN-2007 TIME PLOTTED => 14:00

STATE OF CALIFORNIA - DEPARTMENT OF TRANSPORTATION
Caltrans

DESIGN OVERSIGHT BEHZAD GOLEMOHAMMADI

CALCULATED/DESIGNED BY FK DATE 2/06 REVISED BY
CHECKED BY AB 2/06 DATE REVISED

DIST	COUNTY	ROUTE	KILOMETER POST TOTAL PROJECT	SHEET No	TOTAL SHEETS
04	Ala	80	1.6/2.7	560	643

REGISTERED ELECTRICAL ENGINEER 05/15/06 DATE

1-29-07
PLANS APPROVAL DATE

REGISTERED PROFESSIONAL ENGINEER JENS ERLINGSSON No. 8249 Exp. 9/30/08 ELECTRICAL STATE OF CALIFORNIA

PB POWER, Inc.
A Parsons Brinckerhoff Company
303 Second St., Suite 700N
San Francisco, CA 94107-1317

The State of California or its officers or agents shall not be responsible for the accuracy or completeness of electronic copies of this plan sheet.

To get to the Caltrans web site, go to: http://www.dot.ca.gov

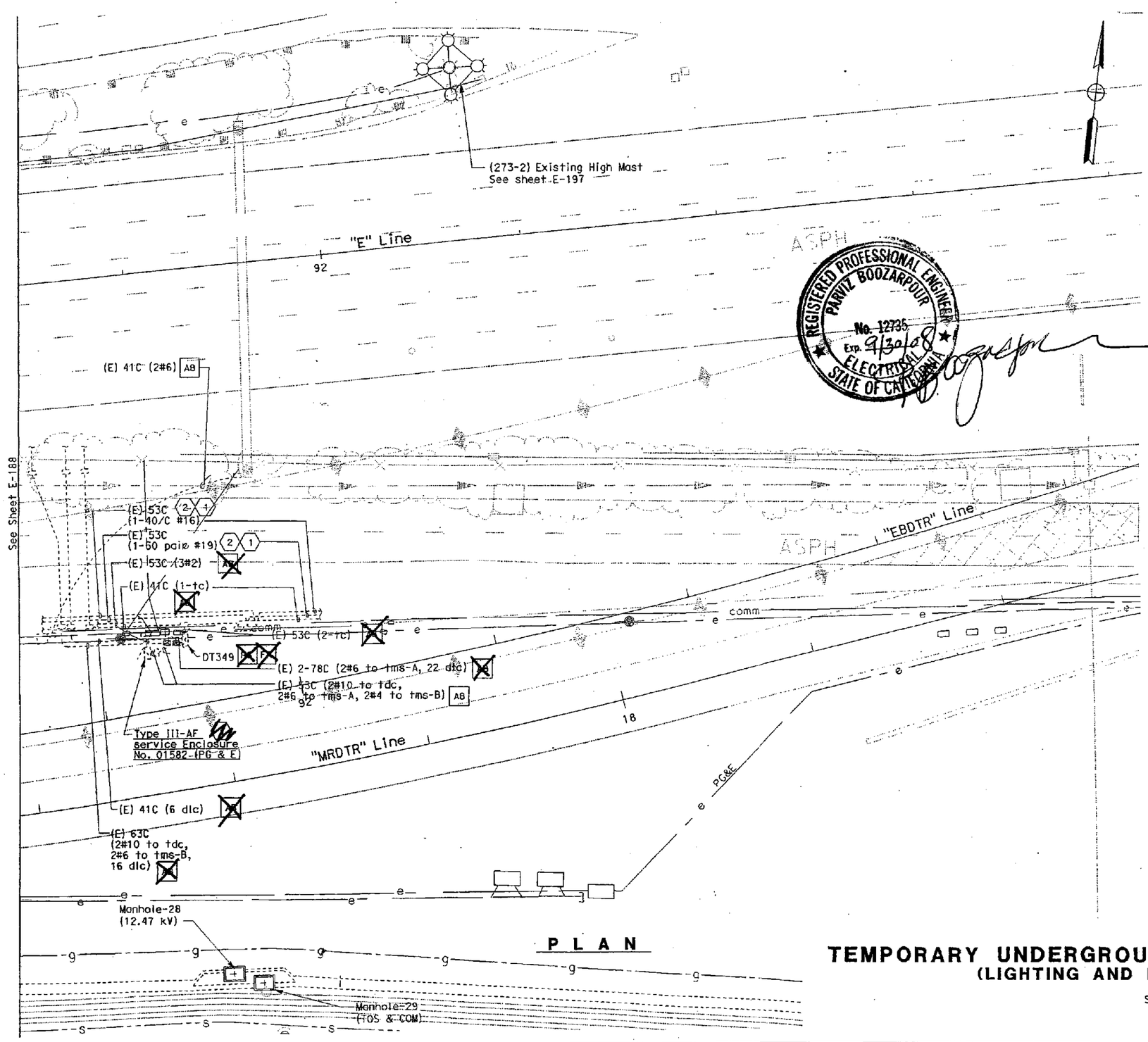

REGISTERED PROFESSIONAL ENGINEER PARVIZ BOOZARPOUR No. 12735 Exp. 9/30/08 ELECTRICAL STATE OF CALIFORNIA

NOTES:

1. References:
   - For underground and roadway at grade, plans, manholes and duct bank sections, see sheets E-80 thru E-122
2. Contractor shall verify all existing installations prior to proceeding with new installation.
3. Contractor shall verify exact location of existing gas and sewer outfall lines. For additional information, see utility plans.
4. TOS equipment is shown for conduit routing only. For details on when TOS equipment shall be installed see special provisions.
5. All Temporary Underground and Roadway At-Grade work is to remain in place at the end of the contract.

SHEET NOTES:

(1) The conduits with the 40/C #16 cable and the 50 pair #19 cable respectively, continue to the existing Maintenance Buiding. Field to verify

(2) Once the new duct bank has been completed and all cables have been installed and connected, these conduits shall be abandoned and the cables removed. Removed cables shall become the property of the contractor. Pull boxes shall be removed and become the property of the contractor.

(3) ~~Service enclosure cabinet shall be relocated as shown on sheet E-185.~~

C.C.O. No.: 28
Suppl. No.:
Contract No. 04-0120L4
Sheet of 12 of 15
Date: 1/8/08

TEMPORARY UNDERGROUND AND ROADWAY AT-GRADE
(LIGHTING AND ELECTRICAL SYSTEMS)

SCALE: 1:200

E-189

STATE OF CALIFORNIA - DEPARTMENT OF TRANSPORTATION
Caltrans

DESIGN OVERSIGHT: BEHZAD GOLEMOHAMMADI

CALCULATED/DESIGNED BY	FK	DATE 2/06	REVISED BY	DATE REVISED
CHECKED BY	AB	2/06		

LAST REVISION 00-00-00 | DATE PLOTTED => 31-JAN-2007 TIME PLOTTED => 15:46

FOR REDUCED PLANS ORIGINAL SCALE IS IN MILLIMETERS 0 20 40 60 80

DGN FILE =>40120lud189.dgn
USERNAME =>trphills

CU 04251 | EA 0120L1

DIST	COUNTY	ROUTE	KILOMETER POST TOTAL PROJECT	SHEET No	TOTAL SHEETS
04	. Ala	80	1.6/2.7	561	643

REGISTERED ELECTRICAL ENGINEER 05/15/06 DATE

1-29-07
PLANS APPROVAL DATE

REGISTERED PROFESSIONAL ENGINEER JENS ERLINGSSON No. 8249 Exp. 9/30/08 ELECTRICAL STATE OF CALIFORNIA

PB POWER, Inc.
A Parsons Brinckerhoff Company
303 Second St., Suite 700N
San Francisco, CA 94107-1317

The State of California or its officers or agents shall not be responsible for the accuracy or completeness of electronic copies of this plan sheet.

To get to the Caltrans web site, go to: http://www.dot.ca.gov

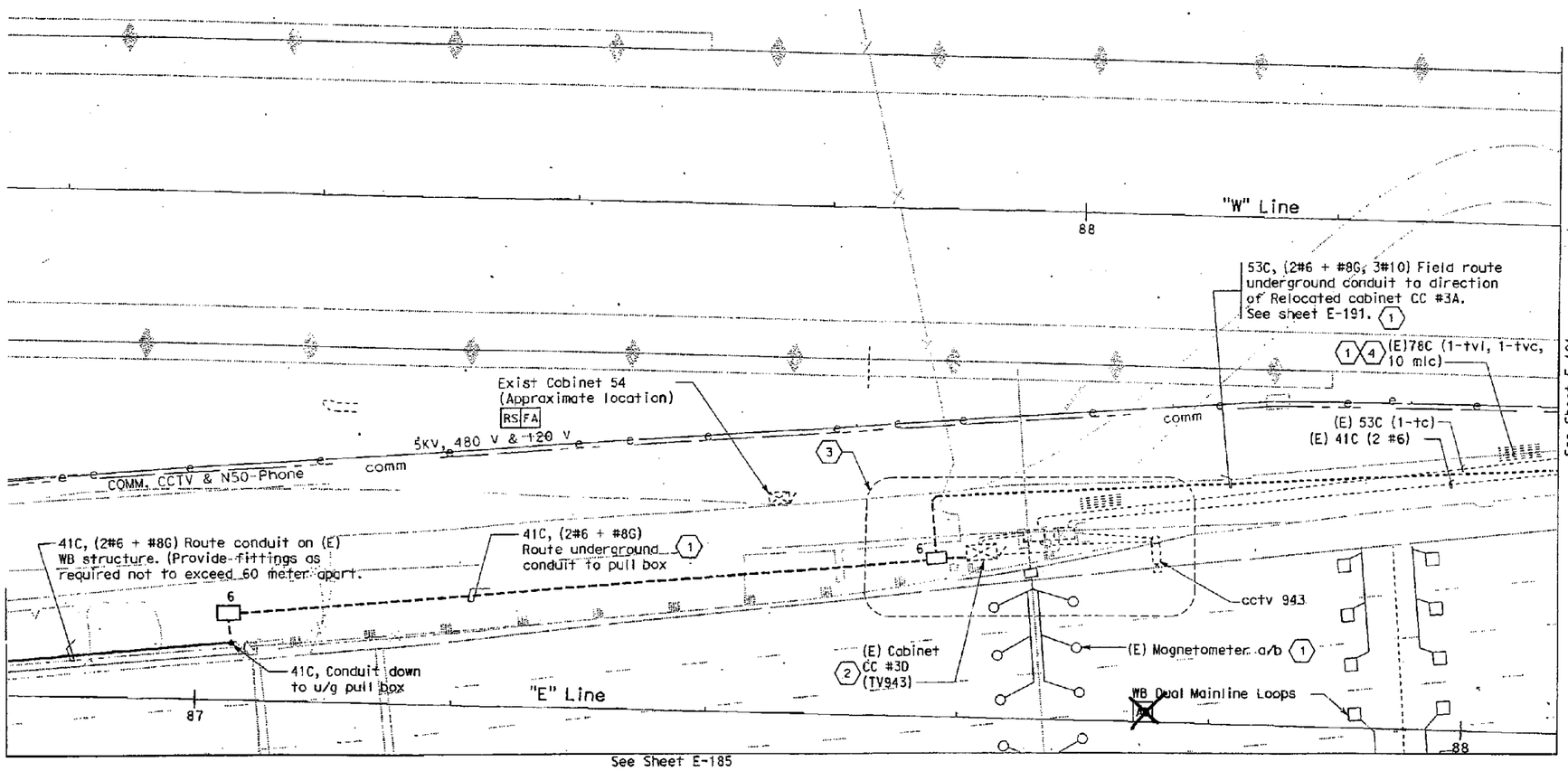

SHEET NOTES:

(1) Contractor to protect installation for duration as specified by the Engineer.

(2) Controller cabinets shall be provided with wireless communication type GPRS. See TOS special provisions.

(3) See Detail 1, sheet E-194.

(4) Contractor to pull out cable 10 mic back to adjacent (E) magnetomer pull box, see Detail 1, sheet E-194.

C.C.O. No.: 28
Suppl. No.:
Contract No. 04-0120L4
Sheet of 13 of 15
Date: 1/8/08

NOTES

1. References:
   - TOS equipment is shown for routing conduit only. For details on when TOS equipment shall be installed, see special provisions.
2. Contractor shall locate all existing installations prior to proceeding with new installation.
3. All Temporary Underground and Roadway At-Grade work is to remain in place at the end of the contract.

REGISTERED PROFESSIONAL ENGINEER PARVIZ BOOZARPOUR No. 12735 Exp. 9/30/08 ELECTRICAL STATE OF CALIFORNIA

TEMPORARY UNDERGROUND AND ROADWAY AT-GRADE
(LIGHTING AND ELECTRICAL SYSTEMS EXISTING NORTH SIDE)

SCALE: 1:200

E-190

CALCULATED/DESIGNED BY	FK	DATE 2/06	REVISED BY
CHECKED BY	AB	2/06	DATE REVISED

DESIGN OVERSIGHT: BEHZAD GOLEMOHAMMADI

STATE OF CALIFORNIA - DEPARTMENT OF TRANSPORTATION

Caltrans

LAST REVISION 00-00-00 | DATE PLOTTED => 31-JAN-2007 | TIME PLOTTED => 15:46

FOR REDUCED PLANS ORIGINAL SCALE IS IN MILLIMETERS 0 20 40 60 80

DGN FILE =>40120lual90.dgn
USERNAME =>trphlis

CU 04251 | EA 0120L1

DIST	COUNTY	ROUTE	KILOMETER POST TOTAL PROJECT	SHEET No	TOTAL SHEETS
04	Ala	80	1.6/2.7	564	643

Caltrans Metric

REGISTERED ELECTRICAL ENGINEER 05/15/06 DATE

1-29-07
PLANS APPROVAL DATE

REGISTERED PROFESSIONAL ENGINEER JENS ERLINGSSON No. 8249 Exp. 9/30/08 ELECTRICAL STATE OF CALIFORNIA

PB POWER, Inc.
A Parsons Brinckerhoff Company
303 Second St., Suite 700N
San Francisco, CA 94107-1317

The State of California or its officers or agents shall not be responsible for the accuracy or completeness of electronic copies of this plan sheet.

To get to the Caltrans web site, go to: http://www.dot.ca.gov

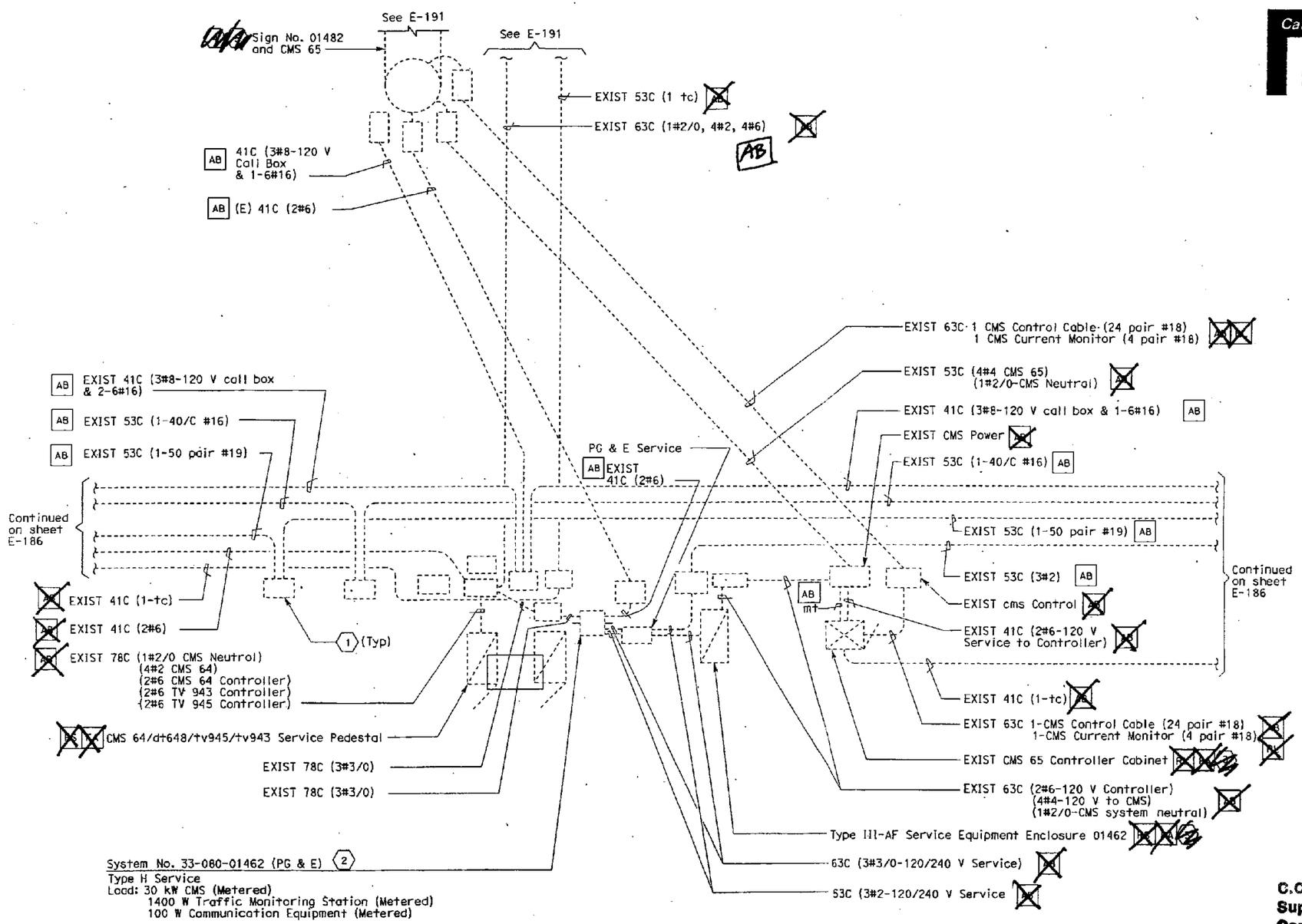

SHEET NOTES:

1. Pull box shall be removed and become the property of the Contractor.
2. To be removed by others.
3. ~~Relocated to location shown on E-185.~~
4. ~~CMS 65 shall be relocated to location shown on E-185.~~
5. ~~Sign panels shall be removed and salvaged to a location determined by the Engineer.~~

NOTES:

1. References:
   - TOS are shown for conduit routing only. For typical details of TOS controllers and devices, see Special Provisions.
2. Contractor shall verify all the existing equipment, conduits and pull boxes shown on plan, prior to installing any new electrical item.
3. All Temporary Underground and Roadway At-Grade work is to remain in place at the end of the contract.

REGISTERED PROFESSIONAL ENGINEER PARVIZ BOOZARPOUR No. 12735 Exp. 9/30/08 ELECTRICAL STATE OF CALIFORNIA

C.C.O. No.: 28
Suppl. No.:
Contract No. 04-0120L4
Sheet of 14 of 15
Date: 1/8/08

DETAILS
TEMPORARY UNDERGROUND AND ROADWAY AT-GRADE PARTIAL PLAN
NO SCALE

E-193

DATE 2/06	REVISED BY	DATE REVISED
FK	AB	2/06

CALCULATED/DESIGNED BY
CHECKED BY

DESIGN OVERSIGHT
BEHZAD GOLEMOHAMMADI

STATE OF CALIFORNIA - DEPARTMENT OF TRANSPORTATION
Caltrans

LAST REVISION 00-00-00
DATE PLOTTED => 31-JAN-2007
TIME PLOTTED => 15:47

FOR REDUCED PLANS ORIGINAL SCALE IS IN MILLIMETERS 0 20 40 60 80

DGN FILE =>40120tuo193.cgn
USERNAME =>trphils

CU 04251 EA 0120L1

DIST	COUNTY	ROUTE	KILOMETER POST TOTAL PROJECT	SHEET NO	TOTAL SHEETS
04	Ala	80	1.6/2.7	565	643

REGISTERED ELECTRICAL ENGINEER 05/15/06 DATE

1-29-07
PLANS APPROVAL DATE

REGISTERED PROFESSIONAL ENGINEER JENS ERLINGSSON No. 8249 Exp. 9/30/08 ELECTRICAL STATE OF CALIFORNIA

PB POWER, Inc.
A Parsons Brinckerhoff Company
303 Second St., Suite 700N
San Francisco, CA 94107-1317

The State of California or its officers or agents shall not be responsible for the accuracy or completeness of electronic copies of this plan sheet.

To get to the Caltrans web site, go to: http://www.dot.ca.gov

Caltrans Metric

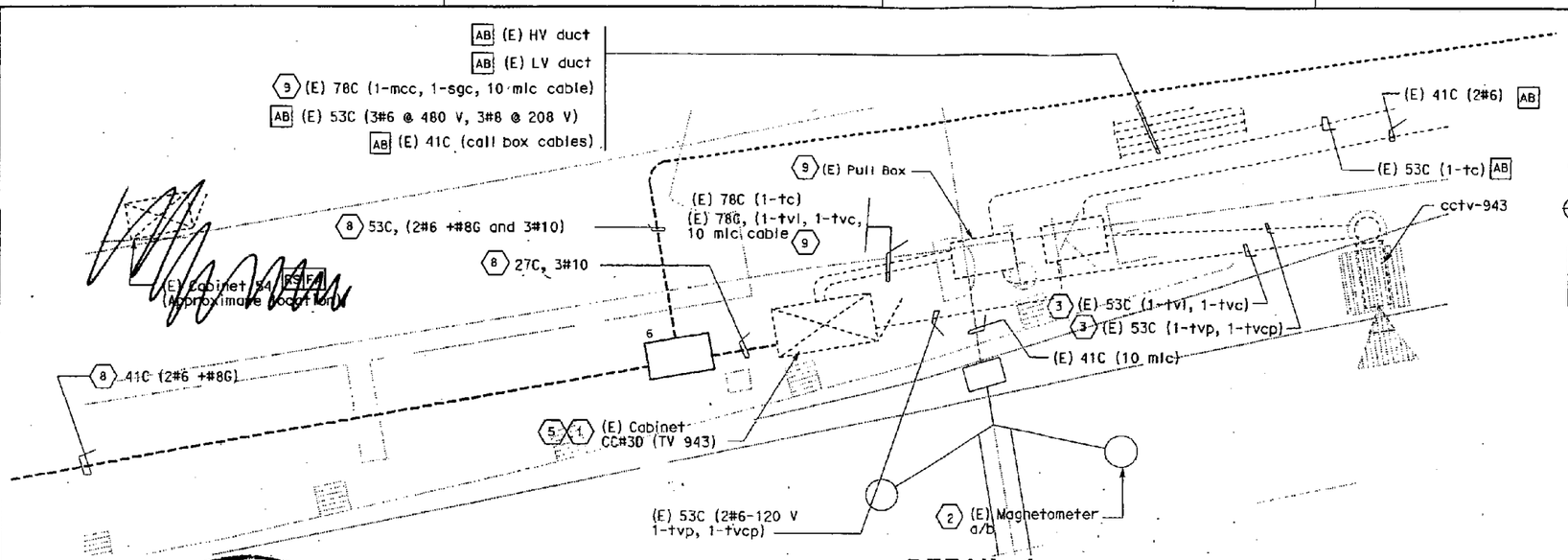

DETAIL 1
NO SCALE

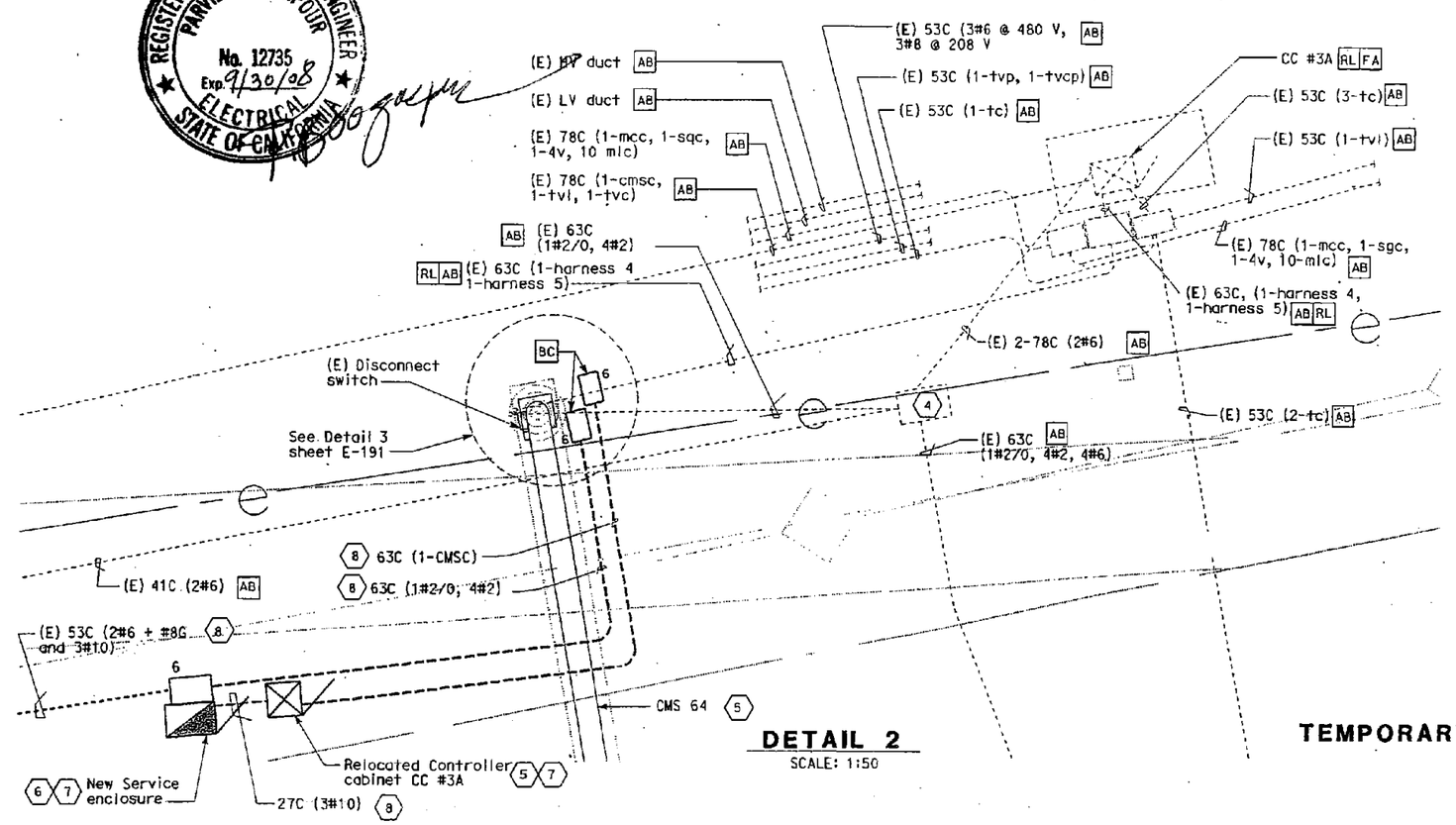

DETAIL 2
SCALE: 1:50

REGISTERED PROFESSIONAL ENGINEER PARVIZ BOOZARPOUR No. 12735 Exp. 9/30/08 ELECTRICAL STATE OF CALIFORNIA

SHEET NOTES:

1. Contractor shall install and connect five State furnished magnetometer sensor units in CC#3D.
2. Magnetometer a/b shall remain operational.
3. Existing conduit and applicable pull boxes including new installation installed by Contractor shall be protected for duration as specified by Engineer.
4. Pull box shall be removed and become the property of the Contractor.
5. Controller cabinets shall be provided with wireless communication type GPRS. See special provisions.
6. Contractor shall provide and install new Service enclosure Type III-3A. See sheet E-196.
7. Contractor to provide concrete foundation pads per Caltrans ES-2D and ES-3C Install conduits as required and connections per special provisions.
8. Contractor to protect installation for duration as specified by the Engineer.
9. Contractor to pull out (E) 10 mlc cable back to adjacent to (E) magnetomer pull box and route cable to (E) Cabinet CC#3D. No cable splices is allowed.

NOTES:

1. References:
   - TOS are shown for conduit routing only. For additional details of TOS controllers and devices, see Special Provisions.
2. Contractor shall verify the location of existing installations prior to proceeding with new installation.
3. All Temporary Underground Roadway At-Grade work is to remain in place at the end of the contract.

C.C.O. No.: 28
Suppl. No.:
Contract No. 04-0120L4
Sheet of 15 of 15
Date: 1/8/08

DETAILS
TEMPORARY UNDERGROUND AND ROADWAY AT-GRADE
(LIGHTING AND ELECTRICAL SYSTEMS EXISTING NORTH SIDE PARTIAL PLANS)

SCALE AS NOTED

E-194

DATE	REVISED BY	DATE REVISED
2/06	AB	2/06

CALCULATED/DESIGNED BY FK
CHECKED BY AB

DESIGN OVERSIGHT
BEHZAD GOLEMOHAMMADI

STATE OF CALIFORNIA - DEPARTMENT OF TRANSPORTATION
Caltrans

LAST REVISION 00-00-00
DATE PLOTTED => 31-JAN-2007
TIME PLOTTED => 15:47

FOR REDUCED PLANS ORIGINAL SCALE IS IN MILLIMETERS 0 20 40 60 80
DGN FILE =>40120lua194.dgn
USERNAME =>rphills
CU 04251
EA 0120L1

STATE OF CALIFORNIA - DEPARTMENT OF TRANSPORTATION

CONTRACT CHANGE ORDER MEMORANDUM

DATE: 1/2/2008

TO: AMER BATA / BEN GHAFGHAZI	FILE: E.A. 04 - 0120L4
FROM: BEN GHAFGHAZI	CO-RTE-PM ALA-80-1.6/2.7
	FED. NO. NO FED AID
CCO#: 28 SUPPLEMENT#: 0 Category Code: CBPC	CONTINGENCY BALANCE (incl. this change) $17,170,004.84
COST: $76,636.61 INCREASE ☑ DECREASE ☐	HEADQUARTERS APPROVAL REQUIRED? ☐ YES ☑ NO
SUPPLEMENTAL FUNDS PROVIDED: $76,636.61	IS THIS REQUEST IN ACCORDANCE WITH ENVIRONMENTAL DOCUMENTS? ☑ YES ☐ NO
CCO DESCRIPTION: Electrical Plan Revisions	**PROJECT DESCRIPTION:** Construct bridge, roadway, building and electrical system.

Original Contract Time:	Time Adj. This Change:	Previously Approved CCO Time Adjustments:	Percentage Time Adjusted: (including this change)	Total # of Unreconciled Deferred Time CCO(s): (including this change)
810 Day(s)	0 Day(s)	0 Day(s)	0 %	0

THIS CHANGE ORDER PROVIDES FOR:

Revisions to electrical work per sheets 3 of 15 through 15 of 15 of the CCO.

The revisions are needed because of the following reasons:

1. Sheet E-109:

- Duct bank cross sections D1-D1, from MH-6 to MH-10, and D3-D3, from MH-8 to MH-12, are being changed from rectangular to round. These duct banks must tie into conduits in jacked utility pipes. The configuration of the conduits in the pipe do not match the configuration in the duct banks. To avoid excessive conduit bends to conform the duct banks with the utility pipes the duct banks will be changed to the same section as the jacked pipe
- The conduits designated as 0323, 0326, 0325 and 0328 on section D2-D2 on the plans are incorrectly shown as spares. These conduits are required from MH-8 through MH-12. Sections D1-D1 and D3-D3 will have these conduits added to proved a continuous run between the manholes.
- Add 500 Kcmil GND and 4/0 AWG GND to section D2-D2. This is missing from the original plans.

2. Sheet E-198, Note #5:

Note #5 calls for installing the temporary 310 W HPS luminaires on wood pole at the beginning of construction. The poles are located within the existing Maintenance Road. The Maintenance Road must be kept open to traffic and therefore the poles cannot be installed until the Maintenance Road detour is constructed.

3. Sheets E-198 and 199:

These sheets call for removal of existing high mast lighting in the median. The plans do not call for any replacement lighting. To provide proper lighting for the roadway the high mast lighting will not be removed.

4. Sheet E-127:

The directional relays 52-18NT on sheet E-127, Note #7, is incorrect. The correct breaker designation is 52-18N.

5. Sheet E-110:

The plans show PVC spacers. PVC spacers are designed to be used with PVC conduit. The conduit in the contract is specified to be rigid galvanized steel. PVC spacers cannot withstand the weight of steel conduit, therefore, the spacers will be changed to galvanized steel.

6. Sheet E-204:

The stationing of the preformed loops are incorrect.

7. Sheets # E-185, E-186, E-189, E-190, E193 and E194:

- The plans call for relocating CMS 65. If the CMS is relocated as shown on the plans it will be within the existing Maintenance Road. Since this road needs to be open to traffic the CMS will not be relocated at this time. Foundation for future relocation of CMS controller cabinet will be installed
- The plans show mainline loop detectors being abandoned. Electrical Design and Traffic Systems Operations requested that the loop detectors be kept functional so traffic counts can continue to be performed.
- Sheet E-185 shows existing magnetometers to be abandoned. Sheet E-194 shows the magnetometers to remain functional. Electrical Design and Traffic Systems Operations require the magnetometers remain functional so traffic counts can continue to be performed. Therefore the magnetometers will not be abandoned.

ADA Notice: For individuals with sensory disabilities, this document is available in alternate formats. For information call: (916) 654-6410 or TDD (916) 654-3880 or write Records and Forms Management, 1120 N Street, MS-89, Sacramento, CA 95814.

8 Wireless CCTV equipment for CCTV-945 (E-185) and CCTV-943 (E-190) is shown to be installed on the plans. There are details for the equipment in the plans or the Special Provisions. This CCO specifies the equipment to be installed.

Payment for these changes will be as Extra Work at Lump Sum of $76,636.61 which can be financed from the supplemental funds of which $100,000 were allotted for this work.

These changes have been discussed and concurred with Parviz Boozarpour of Electrical Design and Sean Coughlin of Traffic Systems Operations. Maintenance concurrence is not necessary because these changes are detail changes and do not affect the function of the permanent electrical system.

No adjustment of contract time is warranted as this change does not affect the controlling operation.

CONCURRED BY:		
Construction Engineer:	Ben Ghafghazi	Date 1/10/08
Bridge Engineer:		Date
Project Engineer:		Date
Project Manager:		Date
FHWA Rep.:		Date
Environmental:		Date
Other (specify):	Parviz Boozarpour, Elec. Design	Date 12/18/07
Other (specify):	Sean Coughlin, Operations	Date 12/18/07
District Prior Approval By:		Date
HQ (Issue Approve) By:		Date
Resident Engineer's Signature:		Date 1/10/08

ESTIMATE OF COST

	THIS REQUEST	TOTAL TO DATE
ITEMS	$0.00	$0.00
FORCE ACCOUNT	$0.00	$0.00
AGREED PRICE	$76,636.61	$76,636.61
ADJUSTMENT	$0.00	$0.00
TOTAL	$76,636.61	$76,636.61

FEDERAL PARTICIPATION

☐ PARTICIPATING ☐ PARTICIPATING IN PART ☑ NONE
☐ NON-PARTICIPATING (MAINTENANCE) ☐ NON-PARTICIPATING

FEDERAL SEGREGATION (if more than one Funding Source or P.I.P. type)
☑ CCO FUNDED PER CONTRACT ☐ CCO FUNDED AS FOLLOWS

FEDERAL FUNDING SOURCE	PERCENT

ADA Notice: For individuals with sensory disabilities, this document is available in alternate formats. For information call: (916) 654-6410 or TDD (916) 654-3880 or write Records and Forms Management, 1120 N Street, MS-89, Sacramento, CA 95814.

C.C. Roadway

STATE OF CALIFORNIA - DEPARTMENT OF TRANSPORTATION

CONTRACT CHANGE ORDER

Change Requested by: Engineer

CCO 29	Suppl. No. 0	Contract No. 04 - 0120L4	Road ALA-80-1.6/2.7	FED. AID LOC.: NO FED AID

M C M CONSTRUCTION INC

You are directed to make the following changes from the plans and specifications or do the following described work not included in the plans and specifications for this contract. ***NOTE: This change order is not effective until approved by the Engineer.***

Description of work to be done, estimate of quantities and prices to be paid. (Segregate between additional work at contract price, agreed price and force account.) Unless otherwise stated, rates for rental of equipment cover only such time as equipment is actually used and no allowance will be made for idle time. This last percentage shown is the net accumulated increase or decrease from the original quantity in the Engineer's Estimate.

Extra Work at Force Account:

Remove and dispose of existing trash and debris along MRDTR Line. Materials to be removed include metal beam guard rail, tires, concrete pile, steel posts, discarded machinery, and other items as determined by the Engineer. Materials are to be disposed of outside the right of way in accordance with Section 7-1.13, "Disposal of Material Outside the Highway Right of Way," of the Standard Specifications.

Estimated cost of Extra Work at Force Account $10,000.00

Estimated Cost: Increase ☑ Decrease ☐ $10,000.00

By reason of this order the time of completion will be adjusted as follows: 0 days

Submitted by

Signature	Resident Engineer BEN GHAFGHAZI	Date 1/3/08

Approval Recommended by

Signature	Construction Engineer Ben Ghafghazi	Date 1/3/08

Engineer Approval by

Signature	Construction Engineer Ben Ghafghazi	Date 2/1/08

We the undersigned contractor, have given careful consideration to the change proposed and agree, if this proposal is approved, that we will provide all equipment, furnish the materials, except as may otherwise be noted above, and perform all services necessary for the work above specified, and will accept as full payment therefor the prices shown above.

NOTE: If you, the contractor, do not sign acceptance of this order, your attention is directed to the requirements of the specifications as to proceeding with the ordered work and filing a written protest within the time therein specified.

Contractor Acceptance by

Signature	(Print name and title) EDMUNDO A. PUCHI, TREASURER	Date 1/23/08

C.C. Roadway

STATE OF CALIFORNIA - DEPARTMENT OF TRANSPORTATION

CONTRACT CHANGE ORDER

Change Requested by: Engineer

CCO 29	Suppl. No. 0	Contract No. 04 - 0120L4	Road ALA-80-1.6/2.7	FED. AID LOC.: NO FED AID

M C M CONSTRUCTION INC

You are directed to make the following changes from the plans and specifications or do the following described work not included in the plans and specifications for this contract. ***NOTE: This change order is not effective until approved by the Engineer.***

Description of work to be done, estimate of quantities and prices to be paid. (Segregate between additional work at contract price, agreed price and force account.) Unless otherwise stated, rates for rental of equipment cover only such time as equipment is actually used and no allowance will be made for idle time. This last percentage shown is the net accumulated increase or decrease from the original quantity in the Engineer's Estimate.

Extra Work at Force Account:

Remove and dispose of existing trash and debris along MRDTR Line. Materials to be removed include metal beam guard rail, tires, concrete pile, steel posts, discarded machinery, and other items as determined by the Engineer. Materials are to be disposed of outside the right of way in accordance with Section 7-1.13, "Disposal of Material Outside the Highway Right of Way," of the Standard Specifications.

Estimated cost of Extra Work at Force Account $10,000.00

Estimated Cost: Increase ☑ Decrease ☐ $10,000.00

By reason of this order the time of completion will be adjusted as follows: 0 days

Submitted by

Signature	Resident Engineer BEN GHAFGHAZI	Date 1/3/08

Approval Recommended by

Signature	Construction Engineer Ben Ghafghazi	Date 1/3/08

Engineer Approval by

Signature	Construction Engineer Ben Ghafghazi	Date 2/1/08

We the undersigned contractor, have given careful consideration to the change proposed and agree, if this proposal is approved, that we will provide all equipment, furnish the materials, except as may otherwise be noted above, and perform all services necessary for the work above specified, and will accept as full payment therefor the prices shown above.

NOTE: If you, the contractor, do not sign acceptance of this order, your attention is directed to the requirements of the specifications as to proceeding with the ordered work and filing a written protest within the time therein specified.

Contractor Acceptance by

Signature	(Print name and title) EDMUNDO A. PUCHI, TREASURER	Date 1/23/08

STATE OF CALIFORNIA - DEPARTMENT OF TRANSPORTATION

CONTRACT CHANGE ORDER

Change Requested by: Engineer

CCO 30	Suppl. No. 0	Contract No. 04 - 0120L4	Road ALA-80-1.6/2.7	FED. AID LOC.: NO FED AID

To: **M C M CONSTRUCTION INC**

You are directed to make the following changes from the plans and specifications or do the following described work not included in the plans and specifications for this contract. ***NOTE: This change order is not effective until approved by the Engineer.***

Description of work to be done, estimate of quantities and prices to be paid. (Segregate between additional work at contract price, agreed price and force account.) Unless otherwise stated, rates for rental of equipment cover only such time as equipment is actually used and no allowance will be made for idle time. This last percentage shown is the net accumulated increase or decrease from the original quantity in the Engineer's Estimate.

Extra Work at Force Account:

As directed by the Engineer, at Bents 18L, 19L, and 20L, prior to placing leveling slab:

1) Place 150 mm to 300 mm rock until subgrade is stable as determined by the Engineer
2) Place heavy duty filter fabric and 19 mm drain rock to bottom elevation of leveling course
3) Remove and dispose of any spoils resulting from placement of rock

Estimated cost of Extra Work at Force Account $180,000.00

Estimated Cost: Increase ☑ **Decrease** ☐ **$180,000.00**

By reason of this order the time of completion will be adjusted as follows: Deferred

Submitted by

Signature	Resident Engineer BEN GHAFGHAZI	Date 4/21/08

Approval Recommended by

Signature	Construction Engineer Ben Ghafghazi	Date 4/21/08

Engineer Approval by

Signature	Construction Manager Amer Bata	Date 4/30/08

We the undersigned contractor, have given careful consideration to the change proposed and agree, if this proposal is approved, that we will provide all equipment, furnish the materials, except as may otherwise be noted above, and perform all services necessary for the work above specified, and will accept as full payment therefor the prices shown above.

NOTE: If you, the contractor, do not sign acceptance of this order, your attention is directed to the requirements of the specifications as to proceeding with the ordered work and filing a written protest within the time therein specified.

Contractor Acceptance by

Signature	(Print name and title) EDMUNDO A. PUCHI, TREASURER	Date 4/24/08

STATE OF CALIFORNIA - DEPARTMENT OF TRANSPORTATION

CONTRACT CHANGE ORDER MEMORANDUM

DATE: 2/5/2008 Page 1 of 1

TO: AMER BATA / BEN GHAFGHAZI	FILE: E.A. 04 - 0120L4
FROM: BEN GHAFGHAZI AMZZ	CO-RTE-PM ALA-80-1.6/2.7
	FED. NO. NO FED AID
CCO#: 30 SUPPLEMENT#: 0 Category Code: ~~CMPR~~	CONTINGENCY BALANCE (incl. this change) $15,190,914.70
COST: $180,000.00 INCREASE ☑ DECREASE ☐	HEADQUARTERS APPROVAL REQUIRED? ☐ YES ☑ NO
SUPPLEMENTAL FUNDS PROVIDED: $0.00	IS THIS REQUEST IN ACCORDANCE WITH ENVIRONMENTAL DOCUMENTS? ☑ YES ☐ NO
CCO DESCRIPTION: Stabilize Subgrade at Bents 18, 19,& 20L	**PROJECT DESCRIPTION:** Construct bridge, roadway, building and electrical system.

Original Contract Time:	Time Adj. This Change:	Previously Approved CCO Time Adjustments:	Percentage Time Adjusted: (including this change)	Total # of Unreconciled Deferred Time CCO(s): (including this change)
810 Day(s)	DEF Day(s)	0 Day(s)	0 %	1

THIS CHANGE ORDER PROVIDES FOR:

Placing 150 mm to 300 mm rock until subgrade is stable, and placing heavy duty filter fabric and 19 mm drain rock to bottom elevation of leveling slab at Bents 18L, 19L, and 20L.

This change is necessary because the subgrade under the leveling slab is super saturated and highly consolidatable. The soil does not have sufficient bearing capacity to support the footing. The leveling slab on its own is not adequate to carry the load.

This work is not covered by any contract items, therefore, payment for this work will be at Extra Work at Force Account for an estimated cost of $180,000.00, which can be financed from the contingency fund.

This CCO has been discussed and concurred with Ade Akinsanya, Structures Design, and Saba Mohan, Geotechnical Design. Maintenance concurrence is not necessary since this CCO does not make changes to the footing.

Adjustment of contract time is deferred pending completion of the work specified in this change as it may affect the controlling operation.

CONCURRED BY:

Construction Engineer:	Ben Ghafghazi	Date 5/8/08
Bridge Engineer:	Rich Foley	Date
Project Engineer:		Date
Project Manager:		Date
FHWA Rep.:		Date
Environmental:		Date
Other (specify):	Ade Akinsanya, Structures Design	Date 1/22/08
Other (specify):	Saba Mohan, Geotechnical	Date 1/22/08
District Prior Approval By:		Date
HQ (Issue Approve) By:		Date
Resident Engineer's Signature:		Date 5/8/08

ESTIMATE OF COST

	THIS REQUEST	TOTAL TO DATE
ITEMS	$0.00	$0.00
FORCE ACCOUNT	$180,000.00	$180,000.00
AGREED PRICE	$0.00	$0.00
ADJUSTMENT	$0.00	$0.00
TOTAL	$180,000.00	$180,000.00

FEDERAL PARTICIPATION

☐ PARTICIPATING ☐ PARTICIPATING IN PART ☑ NONE
☐ NON-PARTICIPATING (MAINTENANCE) ☐ NON-PARTICIPATING

FEDERAL SEGREGATION (if more than one Funding Source or P.I.P. type)
☑ CCO FUNDED PER CONTRACT ☐ CCO FUNDED AS FOLLOWS

FEDERAL FUNDING SOURCE	PERCENT

ADA Notice: For individuals with sensory disabilities, this document is available in alternate formats. For information call: (916) 654-6410 or TDD (916) 654-3880 or write Records and Forms Management, 1120 N Street, MS-89, Sacramento, CA 95814.

STATE OF CALIFORNIA - DEPARTMENT OF TRANSPORTATION

CONTRACT CHANGE ORDER MEMORANDUM

DATE: 7/25/2008 Page 1 of 1

TO: AMER BATA / BEN GHAFGHAZI	FILE: E.A. 04 - 0120L4
FROM: BEN GHAFGHAZI	CO-RTE-PM ALA-80-1.6/2.7
	FED. NO. NO FED AID
CCO#: 30 SUPPLEMENT#: 1 Category Code: CHPR	CONTINGENCY BALANCE (incl. this change) $12,408,864.20
COST: $540,000.00 INCREASE ☑ DECREASE ☐	HEADQUARTERS APPROVAL REQUIRED? ☑ YES ☐ NO
SUPPLEMENTAL FUNDS PROVIDED: $0.00	IS THIS REQUEST IN ACCORDANCE WITH ENVIRONMENTAL DOCUMENTS? ☑ YES ☐ NO
CCO DESCRIPTION: Stabilize Subgrade	**PROJECT DESCRIPTION:** Construct bridge, roadway, building and electrical system.

Original Contract Time:	Time Adj. This Change:	Previously Approved CCO Time Adjustments:	Percentage Time Adjusted: (including this change)	Total # of Unreconciled Deferred Time CCO(s): (including this change)
810 Day(s)	DEF Day(s)	0 Day(s)	0 %	5

THIS CHANGE ORDER PROVIDES FOR:

Placing 150 mm to 300 mm rock until subgrade is stable, and placing 19 mm drain rock to bottom elevation of leveling slab at Piers E17L&R, E18R, E19R, E20R, E21L&R, and E22L&R. Spoils resulting from this operation will be removed and disposed of.

This change is necessary because the subgrade under the leveling slab is super saturated and highly consolidatable. The soil does not have sufficient bearing capacity to support the footing. The rock is needed to provide a stable base with adequate bearing capacity to support the footing. The foundation design did not take into account the degree of saturation of the subgrade and the need for a firm base before placing the leveling slab. This CCO is a supplement to CCO #30. CCO #30 addressed Piers E18L, E19L, and E20L. This CCO provides funds to place rock at all other footings on the contract.

This work is not covered by any contract items, therefore, payment for this work will be at Extra Work at Force Account for estimated cost of $540,000.00, which can be financed from the contingency fund.

This CCO has been discussed and concurred with Ade Akinsanya of Structures Design, Saba Mohan of Geotechnical Design, Jime Gutierrez of Project Development, and Alec Melkonians acting on behalf of Project Manger Ken Terpstra. Maintenance concurrence is not necessary since this CCO does not make changes to the footing. Issue and approve was granted by Headquarters on August 12, 2008.

Adjustment of contract time is deferred pending completion of the work specified in this change as it may affect the controlling operation.

CONCURRED BY:			
Construction Engineer:	Ben Ghafghazi	Date	8/21/08
Bridge Engineer:	Mehran Ardakanian	Date	8/21/08
Project Engineer:	Jaime Gutierrez	Date	8/4/08
Project Manager:	Alec Melkonians for Ken Terpstra	Date	8/4/08
FHWA Rep.:		Date	
Environmental:		Date	
Other (specify):	Ade Akinsanya, Structures Design	Date	1/22/08
Other (specify):	Saba Mohan, Geotechnical	Date	1/22/08
District Prior Approval By:		Date	
HQ (Issue Approve) By:	Ken Darby	Date	8/12/08
Resident Engineer's Signature:		Date	8/21/08

ESTIMATE OF COST

	THIS REQUEST	TOTAL TO DATE
ITEMS	$0.00	$0.00
FORCE ACCOUNT	$540,000.00	$720,000.00
AGREED PRICE	$0.00	$0.00
ADJUSTMENT	$0.00	$0.00
TOTAL	$540,000.00	$720,000.00

FEDERAL PARTICIPATION

☐ PARTICIPATING ☐ PARTICIPATING IN PART ☑ NONE
☐ NON-PARTICIPATING (MAINTENANCE) ☐ NON-PARTICIPATING

FEDERAL SEGREGATION (if more than one Funding Source or P.I.P. type)
☑ CCO FUNDED PER CONTRACT ☐ CCO FUNDED AS FOLLOWS

FEDERAL FUNDING SOURCE	PERCENT

ADA Notice: For individuals with sensory disabilities, this document is available in alternate formats. For information call: (916) 654-6410 or TDD (916) 654-3880 or write Records and Forms Management, 1120 N Street, MS-89, Sacramento, CA 95814.

STATE OF CALIFORNIA - DEPARTMENT OF TRANSPORTATION

CONTRACT CHANGE ORDER

Change Requested by: Engineer

CCO 30	Suppl. No. 1	Contract No. 04 - 0120L4	Road ALA-80-1.6/2.7	FED. AID LOC.: NO FED AID

M C M CONSTRUCTION INC

You are directed to make the following changes from the plans and specifications or do the following described work not included in the plans and specifications for this contract. ***NOTE: This change order is not effective until approved by the Engineer.***

Description of work to be done, estimate of quantities and prices to be paid. (Segregate between additional work at contract price, agreed price and force account.) Unless otherwise stated, rates for rental of equipment cover only such time as equipment is actually used and no allowance will be made for idle time. This last percentage shown is the net accumulated increase or decrease from the original quantity in the Engineer's Estimate.

Extra Work at Force Account:

As directed by the Engineer, at Piers E17L&R, E18R, E19R, E20R, E21L&R, and E22L&R, prior to placing leveling slab:

1) Place 150 mm to 300 mm rock until subgrade is stable as determined by the Engineer
2) Place 19 mm drain rock to bottom elevation of leveling course
3) Remove and dispose of any spoils resulting from placement of rock

Estimated cost of Extra Work at Force Account $540,000.00

Consideration of a time adjustment will be deferred until completion of the work specified herein. Determination of a commensurate time extension will be made in accordance with Section 10-1.14, "Progress Schedule (Critical Path Method)," of the Special Provisions and Section 8-1.07, "Liquidated Damages," of the Standard Specifications.

Estimated Cost: Increase ☑ **Decrease** ☐ **$540,000.00**

By reason of this order the time of completion will be adjusted as follows: Deferred

Submitted by

Signature	Resident Engineer BEN GHAFGHAZI	Date 7/25/08

Approval Recommended by

Signature	Construction Manager Amer Bata	Date 7/30/08

Engineer Approval by

Signature	Construction Manager Amer Bata	Date 8/20/08

We the undersigned contractor, have given careful consideration to the change proposed and agree, if this proposal is approved, that we will provide all equipment, furnish the materials, except as may otherwise be noted above, and perform all services necessary for the work above specified, and will accept as full payment therefor the prices shown above.

NOTE: If you, the contractor, do not sign acceptance of this order, your attention is directed to the requirements of the specifications as to proceeding with the ordered work and filing a written protest within the time therein specified.

Contractor Acceptance by

Signature	(Print name and title) H.D. McGIVERN, GENERAL MANAGER	Date 8/18/08

STATE OF CALIFORNIA - DEPARTMENT OF TRANSPORTATION

CONTRACT CHANGE ORDER MEMORANDUM

DATE: 1/12/2009 Page 1 of 1

TO: AMER BATA / BEN GHAFGHAZI	FILE: E.A. 04 - 0120L4
FROM: BEN GHAFGHAZI	CO-RTE-PM ALA-80-1.6/2.7
	FED. NO. NO FED AID
CCO#: 30 SUPPLEMENT#: 2 Category Code: CHPR	CONTINGENCY BALANCE (incl. this change) $9,004,741.20
COST: $200,000.00 INCREASE ☑ DECREASE ☐	HEADQUARTERS APPROVAL REQUIRED? ☑ YES ☐ NO
SUPPLEMENTAL FUNDS PROVIDED: $0.00	IS THIS REQUEST IN ACCORDANCE WITH ENVIRONMENTAL DOCUMENTS? ☑ YES ☐ NO
CCO DESCRIPTION: Additional funds for CCO #30.	**PROJECT DESCRIPTION:** Construct bridge, roadway, building and electrical system.

Original Contract Time:	Time Adj. This Change:	Previously Approved CCO Time Adjustments:	Percentage Time Adjusted: (including this change)	Total # of Unreconciled Deferred Time CCO(s): (including this change)
810 Day(s)	0 Day(s)	178 Day(s)	22 %	5

THIS CHANGE ORDER PROVIDES FOR:

Additional funds for placing 150 mm to 300 mm rock until subgrade is stable, and placing 19 mm drain rock to bottom elevation of leveling slab at all Piers. Spoils resulting from this operation will be removed and disposed of. Locations are specified in CCOs #30 Supplement 0 and #30 Supplement 1. This CCO also closes out the contract time for this work.

This change is necessary because the subgrade under the leveling slab is super saturated and highly consolidatable. The soil does not have sufficient bearing capacity to support the footing. The rock is needed to provide a stable base with adequate bearing capacity to support the footing. The foundation design did not take into account the degree of saturation of the subgrade and the need for a firm base before placing the leveling slab. The extent of subgrade preparation was greater than originally anticipated. This CCO provides additional funds for the work.

This work is not covered by any contract items, therefore, payment for this work will be at Extra Work at Force Account for an estimated cost of $200,000.00, which can be financed from the contingency fund.

A determination of the delay in completion of the contract due to the work specified by Contract Change Order #30 has been made in accordance with Section 8-1.07, "Liquidated Damages," of the Standard Specifications, Sections 10-1.14, "Progress Schedule (Critical Path Method)," 10-1.15, "Time Related Overhead," and Section 4, "Beginning of Work, Time of Completion and Liquidated Damages," of the Special Provisions. The contract time issue has been resolved under CCO #75 (copy attached) and no additional time shall be granted for CCO #30.

This change has been discussed and concurred with Patrick Treacy, Headquarters Construction Coordinator, Mike Forner, SFOBB Construction Manager, and Ken Terpstra, Project Manager. Design and Maintenance concurrence is not necessary because this CCO does not add any new work. Issue and approve was granted by Headquarters on February 26, 2009.

CONCURRED BY:			
Construction Engineer:	Ben Ghafghazi	Date	3/10/09
Bridge Engineer:	Mehran Ardakanian	Date	3/10/09
Project Engineer:		Date	
Project Manager:	Ken Terprstra	Date	2/20/09
FHWA Rep.:		Date	
Environmental:		Date	
Other (specify):	Patrick Treacy, HQ Const. Coord.	Date	2/9/09
Other (specify):		Date	
District Prior Approval By:	Mike Forner, Principal TE	Date	2/10/09
HQ (Issue Approve) By:	Bob Molera	Date	2/26/09
Resident Engineer's Signature:		Date	3/10/09

ESTIMATE OF COST

	THIS REQUEST	TOTAL TO DATE
ITEMS	$0.00	$0.00
FORCE ACCOUNT	$200,000.00	$920,000.00
AGREED PRICE	$0.00	$0.00
ADJUSTMENT	$0.00	$0.00
TOTAL	$200,000.00	$920,000.00

FEDERAL PARTICIPATION

☐ PARTICIPATING ☐ PARTICIPATING IN PART ☑ NONE
☑ NON-PARTICIPATING (MAINTENANCE) ☐ NON-PARTICIPATING

FEDERAL SEGREGATION (if more than one Funding Source or P.I.P. type)
☑ CCO FUNDED PER CONTRACT ☐ CCO FUNDED AS FOLLOWS

FEDERAL FUNDING SOURCE	PERCENT

ADA Notice: For individuals with sensory disabilities, this document is available in alternate formats. For information call: (916) 654-6410 or TDD (916) 654-3880 or write Records and Forms Management, 1120 N Street, MS-89, Sacramento, CA 95814.

CONTRACT CHANGE ORDER

Change Requested by: Engineer

CCO 30	Suppl. No. 2	Contract No. 04 - 0120L4	Road ALA-80-1.6/2.7	FED. AID LOC.: NO FED AID

To: **M C M CONSTRUCTION INC**

You are directed to make the following changes from the plans and specifications or do the following described work not included in the plans and specifications for this contract. ***NOTE: This change order is not effective until approved by the Engineer.***

Description of work to be done, estimate of quantities and prices to be paid. (Segregate between additional work at contract price, agreed price and force account.) Unless otherwise stated, rates for rental of equipment cover only such time as equipment is actually used and no allowance will be made for idle time. This last percentage shown is the net accumulated increase or decrease from the original quantity in the Engineer's Estimate.

Provide additional funds and resolve contract time.

Extra Work at Force Account:

As directed by the Engineer prior to placing leveling slab:

1) Place 150 mm to 300 mm rock until subgrade is stable as determined by the Engineer
2) Place 19 mm drain rock to bottom elevation of leveling course
3) Remove and dispose of any spoils resulting from placement of rock

Locations are as specified in CCOs #30 supplement 0 and #30 supplement 1.

Estimated cost of Extra Work at Force Account $200,000.00

A determination of the delay in completion of the contract due to the work specified by Contract Change Order #30 has been made in accordance with Section 8-1.07, "Liquidated Damages," of the Standard Specifications, Sections 10-1.14, "Progress Schedule (Critical Path Method)," 10-1.15, "Time Related Overhead," and Section 4, "Beginning of Work, Time of Completion and Liquidated Damages," of the Special Provisions. The contract time issue has been resolved under CCO #75 and no additional time shall be granted for CCO #30.

Estimated Cost: Increase ☑ **Decrease** ☐ **$200,000.00**

By reason of this order the time of completion will be adjusted as follows: 0 days

Submitted by		
Signature	**Resident Engineer** BEN GHAFGHAZI	**Date** 1/12/09
Approval Recommended by		
Signature	**Construction Manager** Amer Bata	**Date** 2/9/09
Engineer Approval by		
Signature	**Construction Manager** Amer Bata	**Date** 3/20/09

We the undersigned contractor, have given careful consideration to the change proposed and agree, if this proposal is approved, that we will provide all equipment, furnish the materials, except as may otherwise be noted above, and perform all services necessary for the work above specified, and will accept as full payment therefor the prices shown above.

NOTE: If you, the contractor, do not sign acceptance of this order, your attention is directed to the requirements of the specifications as to proceeding with the ordered work and filing a written protest within the time therein specified.

Contractor Acceptance by		
Signature	**(Print name and title)** EDMUNDO A. PUCHI, TREASURER	**Date** 3/18/09

STATE OF CALIFORNIA - DEPARTMENT OF TRANSPORTATION

CONTRACT CHANGE ORDER MEMORANDUM

DATE: 6/15/2010 Page 1 of 1

TO: AMER BATA / BEN GHAFGHAZI	FILE: E.A. 04 - 0120L4
FROM: BEN GHAFGHAZI	CO-RTE-PM ALA-80-1.6/2.7
	FED. NO. NO FED AID
CCO#: 30 SUPPLEMENT#: 3 Category Code: CHPR	CONTINGENCY BALANCE (incl. this change): $1,024,598.90
COST: $70,000.00 INCREASE ☑ DECREASE ☐	HEADQUARTERS APPROVAL REQUIRED? ☑ YES ☐ NO
SUPPLEMENTAL FUNDS PROVIDED: $0.00	IS THIS REQUEST IN ACCORDANCE WITH ENVIRONMENTAL DOCUMENTS? ☑ YES ☐ NO
CCO DESCRIPTION: Additional Funds for CCO #30	**PROJECT DESCRIPTION:** Construct bridge, roadway, building and electrical system.

Original Contract Time:	Time Adj. This Change:	Previously Approved CCO Time Adjustments:	Percentage Time Adjusted: (including this change)	Total # of Unreconciled Deferred Time CCO(s): (including this change)
810 Day(s)	0 Day(s)	184 Day(s)	23 %	0

THIS CHANGE ORDER PROVIDES FOR:

Additional funding for stabilizing the foundation subgrade at 12 bent locations as specified under the original Change Order No. 30 and Change Order No. 30, Supplement No. 1.

The original Change Order No. 30 along with Supplement No. 1 provided for the contractor to place rock at 12 bent locations prior to placing the column foundations in order to stabilize the subgrade. This work was concurred by the Office of Engineering Services. The work includes excavating and disposing of the existing super saturated and highly consolidatable soil and then furnishing and placing rock, drain rock and filter fabric.

The cost of the work has exceeded the previous estimate and it is now anticipated that additional funding of $70,000.00 will be required to fund the work.

The work shall be compensated as extra work at force account at an estimated cost of $70,000 which shall be financed from the contract contingency funds. A cost analysis is on file. An Issue and Approved was granted by Larry Salhaney of Headquarters Construction on January 3, 2011.

No adjustment of contract time is warranted as the change will not affect the controlling operation.

CONCURRED BY:

Construction Engineer:	Ben Ghafghazi	Date 1/3/2011
Bridge Engineer:		Date
Project Engineer:		Date
Project Manager:		Date
FHWA Rep.:		Date
Environmental:		Date
Other (specify):		Date
Other (specify):		Date
District Prior Approval By:		Date
HQ (Issue Approve) By:	Larry Salhaney	Date 1/3/11
Resident Engineer's Signature:		Date 1/3/2011

ESTIMATE OF COST

	THIS REQUEST	TOTAL TO DATE
ITEMS	$0.00	$0.00
FORCE ACCOUNT	$70,000.00	$990,000.00
AGREED PRICE	$0.00	$0.00
ADJUSTMENT	$0.00	$0.00
TOTAL	$70,000.00	$990,000.00

FEDERAL PARTICIPATION

☐ PARTICIPATING ☐ PARTICIPATING IN PART ☑ NONE
☐ NON-PARTICIPATING (MAINTENANCE) ☐ NON-PARTICIPATING

FEDERAL SEGREGATION (if more than one Funding Source or P.I.P. type)
☐ CCO FUNDED PER CONTRACT ☐ CCO FUNDED AS FOLLOWS

FEDERAL FUNDING SOURCE	PERCENT

ADA Notice: For individuals with sensory disabilities, this document is available in alternate formats. For information call: (916) 654-6410 or TDD (916) 654-3880 or write Records and Forms Management, 1120 N Street, MS-89, Sacramento, CA 95814.

CONTRACT CHANGE ORDER

Change Requested by: Engineer

CCO: 30	Suppl. No. 3	Contract No. 04 - 0120L4	Road ALA-80-1.6/2.7	FED. AID LOC.: NO FED AID

To: **M C M CONSTRUCTION INC**

You are directed to make the following changes from the plans and specifications or do the following described work not included in the plans and specifications for this contract. ***NOTE: This change order is not effective until approved by the Engineer.***

Description of work to be done, estimate of quantities and prices to be paid. (Segregate between additional work at contract price, agreed price and force account.) Unless otherwise stated, rates for rental of equipment cover only such time as equipment is actually used and no allowance will be made for idle time. This last percentage shown is the net accumulated increase or decrease from the original quantity in the Engineer's Estimate.

Provide additional funds for the work specified in Contract Change Order No. 30, Supplements 0 through 2.

Extra Work at Force Account:

Provide additional funds for the work specified under the original Change Order No. 30 and Change Order No. 30, Supplement No. 1.

Estimated cost of Extra Work at Force Account $70,000.00

Estimated Cost: Increase ☑ Decrease ☐ **$70,000.00**

By reason of this order the time of completion will be adjusted as follows: 0 days

Submitted by

Signature	Resident Engineer Ben Ghafghazi	Date 12/28/2010

Approval Recommended by

Signature	Construction Manager For Hazem El-Mahmoud Amer Bata	Date 12/29/10

Engineer Approval by

Signature	Construction Manager Amer Bata	Date 1/4/11

We the undersigned contractor, have given careful consideration to the change proposed and agree, if this proposal is approved, that we will provide all equipn furnish the materials, except as may otherwise be noted above, and perform all services necessary for the work above specified, and will accept as full paymer therefor the prices shown above.

NOTE: If you, the contractor, do not sign acceptance of this order, your attention is directed to the requirements of the specifications as to proceeding with the ordered work and filing a written protest within the time therein specified.

Contractor Acceptance by

Signature Not Required	(Print name and title)	Date

STATE OF CALIFORNIA - DEPARTMENT OF TRANSPORTATION

CONTRACT CHANGE ORDER

Change Requested by: Engineer

CCO 31	Suppl. No. 0	Contract No. 04 - 0120L4	Road ALA-80-1.6/2.7	FED. AID LOC.: NO FED AID

To: **M C M CONSTRUCTION INC**

You are directed to make the following changes from the plans and specifications or do the following described work not included in the plans and specifications for this contract. ***NOTE: This change order is not effective until approved by the Engineer.***

Description of work to be done, estimate of quantities and prices to be paid. (Segregate between additional work at contract price, agreed price and force account.) Unless otherwise stated, rates for rental of equipment cover only such time as equipment is actually used and no allowance will be made for idle time. This last percentage shown is the net accumulated increase or decrease from the original quantity in the Engineer's Estimate.

Extra Work at Force Account:

As directed by the Engineer, provide, install, maintain, and remove approximately 5,574 M2 of filter fabric and 16 mm BB plywood decking on surface of temporary trestle.

Estimated cost of Extra Work at Force Account $180,000.00

Estimated Cost: Increase ☑ Decrease ☐ **$180,000.00**

By reason of this order the time of completion will be adjusted as follows: 0 days

Submitted by

Signature	Resident Engineer BEN GHAFGHAZI	Date 3/10/08

Approval Recommended by

Signature	Construction Engineer Ben Ghafghazi	Date 3/18/08

Engineer Approval by

Signature	Construction Manager Amer Bata	Date 5/20/08

We the undersigned contractor, have given careful consideration to the change proposed and agree, if this proposal is approved, that we will provide all equipment, furnish the materials, except as may otherwise be noted above, and perform all services necessary for the work above specified, and will accept as full payment therefor the prices shown above.

NOTE: If you, the contractor, do not sign acceptance of this order, your attention is directed to the requirements of the specifications as to proceeding with the ordered work and filing a written protest within the time therein specified.

Contractor Acceptance by

Signature	(Print name and title) EDMUNDO A. PUCHI, TREASURER	Date 3/18/08

STATE OF CALIFORNIA - DEPARTMENT OF TRANSPORTATION

CONTRACT CHANGE ORDER MEMORANDUM

DATE: 2/19/2008 Page 1 of 1

TO: AMER BATA / BEN GHAFGHAZI	FILE: E.A. 04 - 0120L4
FROM: BEN GHAFGHAZI	CO-RTE-PM ALA-80-1.6/2.7
	FED. NO. NO FED AID
CCO#: 31 SUPPLEMENT#: 0 Category Code: AWZZ	CONTINGENCY BALANCE (incl. this change) $16,898,204.50
COST: $180,000.00 INCREASE ☑ DECREASE ☐	HEADQUARTERS APPROVAL REQUIRED? ☐ YES ☑ NO
SUPPLEMENTAL FUNDS PROVIDED: $47,000.00	IS THIS REQUEST IN ACCORDANCE WITH ENVIRONMENTAL DOCUMENTS? ☑ YES ☐ NO
CCO DESCRIPTION: Trestle BMP's	**PROJECT DESCRIPTION:** Construct bridge, roadway, building and electrical system.

Original Contract Time:	Time Adj. This Change:	Previously Approved CCO Time Adjustments:	Percentage Time Adjusted: (including this change)	Total # of Unreconciled Deferred Time CCO(s): (including this change)
810 Day(s)	0 Day(s)	0 Day(s)	0 %	0

THIS CHANGE ORDER PROVIDES FOR:

Providing and installing approximately 5,574 M2 of filter fabric and 16 mm BB plywood decking to cover surface of temporary trestle as SWPPP BMP measures.

This change is necessary to prevent discharges of pollutants into San Francisco Bay. Since this contract did not anticipate land based operations for bridge construction there are no BMP's in the contract to address the trestle decking. The decking has gaps between the planks. These gaps may allow pollutants such as diesel, oil, and anti-freeze from equipment, and sediment from footing excavations to enter the bay. Eliminating the gaps will ensure that pollutants will stay on the deck where they can be contained and managed.

This work is not covered by any contract items, therefore, payment for this work will be at Extra Work at Force Account for an estimated cost of $180,000.00. The CCO can be financed from a combination of $47,000.00 in supplemental funds and $133,000.00 in contingency funds.

This change has been discussed and concurred with Brian Maroney, Bridge Design Oversight. Maintenance concurrence is not necessary since this is temporary work.

CONCURRED BY:

Construction Engineer:	Ben Ghafghazi	Date 2/25/08
Bridge Engineer:		Date
Project Engineer:		Date
Project Manager:		Date
FHWA Rep.:		Date
Environmental:		Date
Other (specify):	Brian Maroney, Bridge Design Ove	Date 2/15/08
Other (specify):	Amer Bata, Const. Manger	Date 2/15/08
District Prior Approval By:	Mike Forner, Principle TE	Date 2/15/08
HQ (Issue Approve) By:		Date
Resident Engineer's Signature:		Date 2/25/08

ESTIMATE OF COST

	THIS REQUEST	TOTAL TO DATE
ITEMS	$0.00	$0.00
FORCE ACCOUNT	$180,000.00	$180,000.00
AGREED PRICE	$0.00	$0.00
ADJUSTMENT	$0.00	$0.00
TOTAL	$180,000.00	$180,000.00

FEDERAL PARTICIPATION

☐ PARTICIPATING ☐ PARTICIPATING IN PART ☑ NONE
☐ NON-PARTICIPATING (MAINTENANCE) ☐ NON-PARTICIPATING

FEDERAL SEGREGATION (if more than one Funding Source or P.I.P. type)
☑ CCO FUNDED PER CONTRACT ☐ CCO FUNDED AS FOLLOWS

FEDERAL FUNDING SOURCE	PERCENT

ADA Notice: For individuals with sensory disabilities, this document is available in alternate formats. For information call: (916) 654-6410 or TDD (916) 654-3880 or write Records and Forms Management, 1120 N Street, MS-89, Sacramento, CA 95814.

STATE OF CALIFORNIA - DEPARTMENT OF TRANSPORTATION

CONTRACT CHANGE ORDER MEMORANDUM

DATE: 4/15/2009 Page 1 of 1

TO: AMER BATA / BEN GHAFGHAZI	FILE: E.A. 04 - 0120L4
FROM: BEN GHAFGHAZI	CO-RTE-PM ALA-80-1.6/2.7
	FED. NO. NO FED AID
CCO#: 31 SUPPLEMENT#: 1 Category Code: AXZZ	CONTINGENCY BALANCE (incl. this change) $7,807,198.80
COST: $40,000.00 INCREASE ☑ DECREASE ☐	HEADQUARTERS APPROVAL REQUIRED? ☐ YES ☑ NO
SUPPLEMENTAL FUNDS PROVIDED: $0.00	IS THIS REQUEST IN ACCORDANCE WITH ENVIRONMENTAL DOCUMENTS? ☑ YES ☐ NO
CCO DESCRIPTION: Additional funds for trestle BMP's	**PROJECT DESCRIPTION:** Construct bridge, roadway, building and electrical system.

Original Contract Time:	Time Adj. This Change:	Previously Approved CCO Time Adjustments:	Percentage Time Adjusted: (including this change)	Total # of Unreconciled Deferred Time CCO(s): (including this change)
810 Day(s)	0 Day(s)	184 Day(s)	23 %	12

THIS CHANGE ORDER PROVIDES FOR:

Additional funds for maintaining trestle plywood and filter fabric BMPs which were installed under CCO #31 through the end of the contract.

This change is necessary because the cost of maintaining the trestle is higher than originally anticipated due to damage of the plywood and filter fabric from heavy equipment. This CCO will provide funding to maintain the BMPs until the end of the contract and will also provide funds for removal of the BMPs.

CCO #31 was issued to install filter fabric and plywood decking on the temporary trestle to prevent discharge of pollutants into San Francisco Bay. This was necessary because there are no BMPs in the contract to address the trestle decking. The decking has gaps between the planks which allow pollutants to enter the bay. Eliminating the gaps ensures that pollutants will stay on the deck where they can be contained and managed.

This work will be paid as Extra Work at Force Account for $40,000.00, which can be financed from the contingency fund.

Design and Maintenance concurrence is not necessary since this CCO is only for additional funds.

No adjustment of contract time is warranted as this change does not affect the controlling operation.

CONCURRED BY:

Construction Engineer:	Ben Ghafghazi	Date 4/20/09
Bridge Engineer:		Date
Project Engineer:		Date
Project Manager:		Date
FHWA Rep.:		Date
Environmental:		Date
Other (specify):		Date
Other (specify):		Date
District Prior Approval By:	Mike Forner, Principal TE	Date 4-21-09
HQ (Issue Approve) By:		Date
Resident Engineer's Signature:		Date 4/20/09

ESTIMATE OF COST

	THIS REQUEST	TOTAL TO DATE
ITEMS	$0.00	$0.00
FORCE ACCOUNT	$40,000.00	$220,000.00
AGREED PRICE	$0.00	$0.00
ADJUSTMENT	$0.00	$0.00
TOTAL	$40,000.00	$220,000.00

FEDERAL PARTICIPATION

☐ PARTICIPATING ☐ PARTICIPATING IN PART ☑ NONE
☐ NON-PARTICIPATING (MAINTENANCE) ☐ NON-PARTICIPATING

FEDERAL SEGREGATION (if more than one Funding Source or P.I.P. type)
☐ CCO FUNDED PER CONTRACT ☐ CCO FUNDED AS FOLLOWS

FEDERAL FUNDING SOURCE	PERCENT

ADA Notice: For individuals with sensory disabilities, this document is available in alternate formats. For information call: (916) 654-6410 or TDD (916) 654-3880 or write Records and Forms Management, 1120 N Street, MS-89, Sacramento, CA 95814.

CONTRACT CHANGE ORDER

Change Requested by: Engineer

CCO 31	Suppl. No. 1	Contract No. 04 - 0120L4	Road ALA-80-1.6/2.7	FED. AID LOC.: NO FED AID

M C M CONSTRUCTION INC

You are directed to make the following changes from the plans and specifications or do the following described work not included in the plans and specifications for this contract. ***NOTE: This change order is not effective until approved by the Engineer.***

Description of work to be done, estimate of quantities and prices to be paid. (Segregate between additional work at contract price, agreed price and force account.) Unless otherwise stated, rates for rental of equipment cover only such time as equipment is actually used and no allowance will be made for idle time. This last percentage shown is the net accumulated increase or decrease from the original quantity in the Engineer's Estimate.

Additional funds for temporary trestle BMPs.

Extra Work at Force Account:

As directed by the Engineer, provide, install, maintain, and remove approximately 5,574 M2 of filter fabric and 16 mm BB plywood decking on surface of temporary trestle.

Estimated cost of Extra Work at Force Account $40,000.00

Estimated Cost: Increase ☑ Decrease ☐ $40,000.00

By reason of this order the time of completion will be adjusted as follows: 0 days

Submitted by		
Signature	Resident Engineer BEN GHAFGHAZI	Date 4/20/09
Approval Recommended by		
Signature	Construction Manager Amer Bata	Date 4/21/09
Engineer Approval by		
Signature Michael Hoover for	Construction Manager Amer Bata	Date 4-21-09

We the undersigned contractor, have given careful consideration to the change proposed and agree, if this proposal is approved, that we will provide all equipment, furnish the materials, except as may otherwise be noted above, and perform all services necessary for the work above specified, and will accept as full payment therefor the prices shown above.

NOTE: If you, the contractor, do not sign acceptance of this order, your attention is directed to the requirements of the specifications as to proceeding with the ordered work and filing a written protest within the time therein specified.

Contractor Acceptance by		
Signature	(Print name and title)	Date

STATE OF CALIFORNIA - DEPARTMENT OF TRANSPORTATION

CONTRACT CHANGE ORDER MEMORANDUM

DATE: 7/27/2009 Page 1 of 1

TO: AMER BATA / BEN GHAFGHAZI

FROM: BEN GHAFGHAZI

FILE: E.A. 04 - 0120L4
CO-RTE-PM ALA-80-1.6/2.7
FED. NO. NO FED AID

CCO#: 31 | SUPPLEMENT#: 2 | Category Code: **AWZZ**

CONTINGENCY BALANCE (incl. this change) **$5,781,256.20**

COST: **$120,000.00** INCREASE ☑ DECREASE ☐

HEADQUARTERS APPROVAL REQUIRED? ☑ YES ☐ NO

SUPPLEMENTAL FUNDS PROVIDED: **$0.00**

IS THIS REQUEST IN ACCORDANCE WITH ENVIRONMENTAL DOCUMENTS? ☑ YES ☐ NO

CCO DESCRIPTION:
Additional funds for trestle BMP's.

PROJECT DESCRIPTION:
Construct bridge, roadway, building and electrical system.

Original Contract Time:	Time Adj. This Change:	Previously Approved CCO Time Adjustments:	Percentage Time Adjusted: (including this change)	Total # of Unreconciled Deferred Time CCO(s): (including this change)
810 Day(s)	0 Day(s)	184 Day(s)	23 %	10

THIS CHANGE ORDER PROVIDES FOR:
Additional funds for maintaining trestle plywood and filter fabric BMPs, which were installed under CCO #31 SO, and CCO #31 Supplement No. 1, through the end of the contract.

This change is necessary because the cost of maintaining the trestle is higher than originally anticipated due to damage of the plywood and filter fabric from heavy equipment. This CCO will provide funding to maintain the BMPs until the end of the contract and will also provide funds for removal of the BMPs.

CCO #31 was issued to install filter fabric and plywood decking on the temporary trestle to prevent discharge of pollutants into San Francisco Bay. This was necessary because there are no BMPs in the contract to address the trestle decking. The decking has gaps between the planks which allow pollutants to enter the bay. Eliminating the gaps ensures that pollutants will stay on the deck where they can be contained and managed. A supplement of $40,000.00 was issued in April 2009 to provide for maintaining the BMPs through the end of the contract. Additional plywood replacement and higher than anticipated maintenance has resulted in additional costs for this work.

This work will be paid as Extra Work at Force Account for $120,000.00, which can be financed from the contingency fund.

This change was discussed and concurred with Patrick Treacy, HQ Construction Coordinator; Mike Forner, SFOBB Construction Manager; and Ken Terpstra, Project Manager. An Issue and Approve was granted by Headquarters on August 10, 2009. Design and Maintenance concurrence is not necessary since this CCO is only for additional funds.

No adjustment of contract time is warranted as this change does not affect the controlling operation.

CONCURRED BY:

Construction Engineer:	Ben Ghafghazi	Date 8/10/09
Bridge Engineer:		Date
Project Engineer:		Date
Project Manager:	Ken Terprstra	Date 7/28/09
FHWA Rep.:		Date
Environmental:		Date
Other (specify):	Patrick Treacy, HQ Const. Coord.	Date 7/28/09
Other (specify):		Date
District Prior Approval By:	Mike Forner, Principal TE	Date 7/28/09
HQ (Issue Approve) By:	Bob Molera	Date 8/10/09
Resident Engineer's Signature:		Date 8/10/09

ESTIMATE OF COST

	THIS REQUEST	TOTAL TO DATE
ITEMS	$0.00	$0.00
FORCE ACCOUNT	$120,000.00	$340,000.00
AGREED PRICE	$0.00	$0.00
ADJUSTMENT	$0.00	$0.00
TOTAL	$120,000.00	$340,000.00

FEDERAL PARTICIPATION

☐ PARTICIPATING ☐ PARTICIPATING IN PART ☑ NONE
☐ NON-PARTICIPATING (MAINTENANCE) ☐ NON-PARTICIPATING

FEDERAL SEGREGATION (if more than one Funding Source or P.I.P. type)
☑ CCO FUNDED PER CONTRACT ☐ CCO FUNDED AS FOLLOWS

FEDERAL FUNDING SOURCE	PERCENT

ADA Notice: For individuals with sensory disabilities, this document is available in alternate formats. For information call: (916) 654-6410 or TDD (916) 654-3880 or write Records and Forms Management, 1120 N Street, MS-89, Sacramento, CA 95814.

STATE OF CALIFORNIA - DEPARTMENT OF TRANSPORTATION

CONTRACT CHANGE ORDER

Change Requested by: Engineer

CCO 31	Suppl. No. 2	Contract No. 04 - 0120L4	Road ALA-80-1.6/2.7	FED. AID LOC.: NO FED AID

To: **M C M CONSTRUCTION INC**

You are directed to make the following changes from the plans and specifications or do the following described work not included in the plans and specifications for this contract. ***NOTE: This change order is not effective until approved by the Engineer.***

Description of work to be done, estimate of quantities and prices to be paid. (Segregate between additional work at contract price, agreed price and force account.) Unless otherwise stated, rates for rental of equipment cover only such time as equipment is actually used and no allowance will be made for idle time. This last percentage shown is the net accumulated increase or decrease from the original quantity in the Engineer's Estimate.

Additional funds for temporary trestle BMPs.

Extra Work at Force Account:

As directed by the Engineer, provide, install, maintain, and remove approximately 5,574 M2 of filter fabric and 16 mm BB plywood decking on surface of temporary trestle.

Estimated cost of Extra Work at Force Account $120,000.00

Estimated Cost: **Increase** ☑ **Decrease** ☐ **$120,000.00**

By reason of this order the time of completion will be adjusted as follows: 0 days

Signature	**Resident Engineer** BEN GHAFGHAZI	**Date** 7/29/09
Signature	**Construction Manager** for Amer Bata / Mehran Ardakani	**Date** 7/29/09
Signature	**Construction Manager** Amer Bata	**Date** 8/12/09

We the undersigned contractor, have given careful consideration to the change proposed and agree, if this proposal is approved, that we will provide all equipment, furnish the materials, except as may otherwise be noted above, and perform all services necessary for the work above specified, and will accept as full payment therefor the prices shown above.

NOTE: If you, the contractor, do not sign acceptance of this order, your attention is directed to the requirements of the specifications as to proceeding with the ordered work and filing a written protest within the time therein specified.

Signature N/A	**(Print name and title)**	**Date**

STATE OF CALIFORNIA - DEPARTMENT OF TRANSPORTATION

CONTRACT CHANGE ORDER MEMORANDUM

TO: AMER BATA / BEN GHAFGHAZI	FILE: E.A. 04 - 0120L4
FROM: BEN GHAFGHAZI	CO-RTE-PM ALA-80-1.6/2.7
	FED. NO. NO FED AID
CCO#: 31 SUPPLEMENT#: 3 Category Code: AWZZ	CONTINGENCY BALANCE (incl. this change): $1,029,598.90
COST: $20,000.00 INCREASE ☑ DECREASE ☐	HEADQUARTERS APPROVAL REQUIRED? ☑ YES ☐ NO
SUPPLEMENTAL FUNDS PROVIDED: $0.00	IS THIS REQUEST IN ACCORDANCE WITH ENVIRONMENTAL DOCUMENTS? ☑ YES ☐ NO
CCO DESCRIPTION: Additional Funds for Trestle BMPs	**PROJECT DESCRIPTION:** Construct bridge, roadway, building and electrical system.

Original Contract Time:	Time Adj. This Change:	Previously Approved CCO Time Adjustments:	Percentage Time Adjusted: (including this change)	Total # of Unreconciled Deferred Time CCO(s): (including this change)
810 Day(s)	0 Day(s)	0 Day(s)	0 %	0

THIS CHANGE ORDER PROVIDES FOR:

Additional funding for installing filter fabric and plywood decking to cover the surface of the contractor's temporary access trestle as part of storm water pollution prevention best management practices.

The original Change Order No. 31 along with the additional funding provided under Supplements No. 1 and No. 2 provided force account funding for the contractor to furnish and install filter fabric and plywood decking to cover the surface of the contractor's temporary access trestle. The trestle extends out over the San Francisco Bay and the contract didn't provide a payment mechanism to compensate the contractor for the cost of covering the gaps in the trestle to prevent pollutants from entering the bay.

The cost of the work has exceeded the previous estimate and it is now anticipated that additional funding of $20,000.00 will be required to fund the work.

The work shall be compensated as extra work at force account at an estimated cost of $20,000 which shall be financed from the contract contingency funds. A cost analysis is on file. An Issue and Approved was granted by Larry Salhaney of Headquarters Construction on January 3, 2011.

No adjustment of contract time is warranted as the change will not affect the controlling operation.

Maintenance concurrence is not required as this change doesn't affect any permanent roadway features.

CONCURRED BY:

Construction Engineer:	Ben Ghafghazi	Date	1/3/2011
Bridge Engineer:		Date	
Project Engineer:		Date	
Project Manager:	Ken Terprstra	Date	7/28/09
FHWA Rep.:		Date	
Environmental:		Date	
Other (specify):	Patrick Treacy, HQ Const. Coord.	Date	7/28/09
Other (specify):		Date	
District Prior Approval By:	Mike Forner, Principal TE	Date	7/28/09
HQ (Issue Approve) By:	Larry Salhaney	Date	1/3/11
Resident Engineer's Signature:		Date	1/3/2011

ESTIMATE OF COST

	THIS REQUEST	TOTAL TO DATE
ITEMS	$0.00	$0.00
FORCE ACCOUNT	$20,000.00	$360,000.00
AGREED PRICE	$0.00	$0.00
ADJUSTMENT	$0.00	$0.00
TOTAL	$20,000.00	$360,000.00

FEDERAL PARTICIPATION

☐ PARTICIPATING ☐ PARTICIPATING IN PART ☑ NONE
☐ NON-PARTICIPATING (MAINTENANCE) ☐ NON-PARTICIPATING

FEDERAL SEGREGATION (if more than one Funding Source or P.I.P. type)
☐ CCO FUNDED PER CONTRACT ☐ CCO FUNDED AS FOLLOWS

FEDERAL FUNDING SOURCE	PERCENT

ADA Notice: For individuals with sensory disabilities, this document is available in alternate formats. For information call: (916) 654-6410 or TDD (916) 654-3880 or write Records and Forms Management, 1120 N Street, MS-89, Sacramento, CA 95814.

STATE OF CALIFORNIA - DEPARTMENT OF TRANSPORTATION

CONTRACT CHANGE ORDER

Change Requested by: Engineer

CCO: 31	Suppl. No. 3	Contract No. 04 - 0120L4	Road ALA-80-1.6/2.7	FED. AID LOC.: NO FED AID

To: **M C M CONSTRUCTION INC**

You are directed to make the following changes from the plans and specifications or do the following described work not included in the plans and specifications for this contract. ***NOTE: This change order is not effective until approved by the Engineer.***

Description of work to be done, estimate of quantities and prices to be paid. (Segregate between additional work at contract price, agreed price and force account.) Unless otherwise stated, rates for rental of equipment cover only such time as equipment is actually used and no allowance will be made for idle time. This last percentage shown is the net accumulated increase or decrease from the original quantity in the Engineer's Estimate.

Extra Work at Force Account:

Provide additional funds for the work specified under the original Change Order No. 31.

Estimated cost of Extra Work at Force Account $20,000.00

Estimated Cost: Increase ☑ Decrease ☐ **$20,000.00**

By reason of this order the time of completion will be adjusted as follows: 0 days

Submitted by

Signature	Resident Engineer BEN GHAFGHAZI	Date 12/28/2011

Approval Recommended by

Signature	Construction Manager For Hazem El-Mahmoud Amer Bata	Date 12/29/10

Engineer Approval by

Signature	Construction Manager Amer Bata	Date 1/4/11

We the undersigned contractor, have given careful consideration to the change proposed and agree, if this proposal is approved, that we will provide all equipm furnish the materials, except as may otherwise be noted above, and perform all services necessary for the work above specified, and will accept as full paymer therefor the prices shown above.

NOTE: If you, the contractor, do not sign acceptance of this order, your attention is directed to the requirements of the specifications as to proceeding with the ordered work and filing a written protest within the time therein specified.

Contractor Acceptance by

Signature NOT Required	(Print name and title)	Date

CONTRACT CHANGE ORDER

Change Requested by: Engineer

CCO 32	Suppl. No. 0	Contract No. 04 - 0120L4	Road ALA-80-1.6/2.7	FED. AID LOC.: NO FED AID

M C M CONSTRUCTION INC

You are directed to make the following changes from the plans and specifications or do the following described work not included in the plans and specifications for this contract. ***NOTE: This change order is not effective until approved by the Engineer.***

Description of work to be done, estimate of quantities and prices to be paid. (Segregate between additional work at contract price, agreed price and force account.) Unless otherwise stated, rates for rental of equipment cover only such time as equipment is actually used and no allowance will be made for idle time. This last percentage shown is the net accumulated increase or decrease from the original quantity in the Engineer's Estimate.

Extra Work at Force Account:

Provide labor, equipment, and materials to maintain, repair, remove, replace, and relocate existing and temporary electrical systems as determined by the Engineer. All work shall be in accordance with Section 86-1.06, "Maintaining Existing and Temporary Electrical Systems," of the Standard Specifications.

Estimated cost of Extra Work at Force Account $25,000.00

Estimated Cost: Increase ☑ Decrease ☐ **$25,000.00**

By reason of this order the time of completion will be adjusted as follows: 0 days

Submitted by

Signature	Resident Engineer BEN GHAFGHAZI	Date 2/29/08

Approval Recommended by

Signature	Construction Engineer Ben Ghafghazi	Date 2/29/08

Engineer Approval by

Signature	Construction Engineer Ben Ghafghazi	Date 4/8/08

We the undersigned contractor, have given careful consideration to the change proposed and agree, if this proposal is approved, that we will provide all equipment, furnish the materials, except as may otherwise be noted above, and perform all services necessary for the work above specified, and will accept as full payment therefor the prices shown above.

NOTE: If you, the contractor, do not sign acceptance of this order, your attention is directed to the requirements of the specifications as to proceeding with the ordered work and filing a written protest within the time therein specified.

Contractor Acceptance by

Signature	(Print name and title) EDMUNDO A. TUCHI, TREASURER	Date 3/31/08

STATE OF CALIFORNIA - DEPARTMENT OF TRANSPORTATION

CONTRACT CHANGE ORDER MEMORANDUM

DATE: 2/27/2008 Page 1 of 1

TO: AMER BATA / BEN GHAFGHAZI	FILE: E.A. 04 - 0120L4
FROM: BEN GHAFGHAZI	CO-RTE-PM ALA-80-1.6/2.7
	FED. NO. NO FED AID
CCO#: 32 SUPPLEMENT#: 0 Category Code: CBSB	CONTINGENCY BALANCE (incl. this change) $16,903,804.50
COST: $25,000.00 INCREASE ☑ DECREASE ☐	HEADQUARTERS APPROVAL REQUIRED? ☐ YES ☑ NO
SUPPLEMENTAL FUNDS PROVIDED: $0.00	IS THIS REQUEST IN ACCORDANCE WITH ENVIRONMENTAL DOCUMENTS? ☑ YES ☐ NO
CCO DESCRIPTION: Maintain electrical systems	**PROJECT DESCRIPTION:** Construct bridge, roadway, building and electrical system.

Original Contract Time:	Time Adj. This Change:	Previously Approved CCO Time Adjustments:	Percentage Time Adjusted: (including this change)	Total # of Unreconciled Deferred Time CCO(s): (including this change)
810 Day(s)	0 Day(s)	0 Day(s)	0 %	1

THIS CHANGE ORDER PROVIDES FOR:

Maintaining, repairing, removing, replacing, and relocating existing and temporary electrical systems as determined by the Engineer. All work shall be in accordance with Section 86-1.06, "Maintaining Existing and Temporary Electrical Systems," of the Standard Specifications.

This change is necessary to maintain such facilities as ramp metering, highway lighting, traffic monitoring systems, and sign illumination within project limits that are required to remain functional. This is only for facilities that are not covered in the Contract Plans or Special Provisions.

This work is not covered by any contract items, therefore, payment for this work will be at Extra Work at Force Account for an estimated cost of $25,000.00, which can be financed from the contingency fund.

Design and Maintenance concurrence is not necessary since this work does not change any permanent features.

No adjustment of contract time is warranted as this change does not affect the controlling operation.

CONCURRED BY:		
Construction Engineer:	Ben Ghafghazi	Date 2/29/08
Bridge Engineer:		Date
Project Engineer:		Date
Project Manager:		Date
FHWA Rep.:		Date
Environmental:		Date
Other (specify):		Date
Other (specify):		Date
District Prior Approval By:		Date
HQ (Issue Approve) By:		Date
Resident Engineer's Signature:		Date 2/29/08

ESTIMATE OF COST

	THIS REQUEST	TOTAL TO DATE
ITEMS	$0.00	$0.00
FORCE ACCOUNT	$25,000.00	$25,000.00
AGREED PRICE	$0.00	$0.00
ADJUSTMENT	$0.00	$0.00
TOTAL	$25,000.00	$25,000.00

FEDERAL PARTICIPATION

☐ PARTICIPATING ☐ PARTICIPATING IN PART ☑ NONE
☐ NON-PARTICIPATING (MAINTENANCE) ☐ NON-PARTICIPATING

FEDERAL SEGREGATION (if more than one Funding Source or P.I.P. type)
☑ CCO FUNDED PER CONTRACT ☐ CCO FUNDED AS FOLLOWS

FEDERAL FUNDING SOURCE	PERCENT

ADA Notice: For individuals with sensory disabilities, this document is available in alternate formats. For information call: (916) 654-6410 or TDD (916) 654-3880 or write Records and Forms Management, 1120 N Street, MS-89, Sacramento, CA 95814.

STATE OF CALIFORNIA - DEPARTMENT OF TRANSPORTATION

CONTRACT CHANGE ORDER MEMORANDUM

DATE: 3/24/2010 Page 1 of 1

TO: AMER BATA / BEN GHAFGHAZI	FILE: E.A. 04 - 0120L4
FROM: BEN GHAFGHAZI	CO-RTE-PM ALA-80-1.6/2.7
	FED. NO. NO FED AID
CCO#: 32 SUPPLEMENT#: 1 Category Code: CBSB	CONTINGENCY BALANCE (incl. this change) $2,256,663.40
COST: $25,000.00 INCREASE ☑ DECREASE ☐	HEADQUARTERS APPROVAL REQUIRED? ☐ YES ☑ NO
SUPPLEMENTAL FUNDS PROVIDED: $0.00	IS THIS REQUEST IN ACCORDANCE WITH ENVIRONMENTAL DOCUMENTS? ☑ YES ☐ NO
CCO DESCRIPTION: Add'l funds to maintain electrical sys.	**PROJECT DESCRIPTION:** Construct bridge, roadway, building and electrical system.

Original Contract Time:	Time Adj. This Change:	Previously Approved CCO Time Adjustments:	Percentage Time Adjusted: (including this change)	Total # of Unreconciled Deferred Time CCO(s): (including this change)
810 Day(s)	0 Day(s)	184 Day(s)	23 %	15

THIS CHANGE ORDER PROVIDES FOR:

Additional funds for maintaining, repairing, removing, replacing, and relocating existing and temporary electrical systems as determined by the Engineer, through the end of the contract. All work shall be in accordance with Section 86-1.06, "Maintaining Existing and Temporary Electrical Systems," of the Standard Specifications.

This change is necessary because the cost of maintaining the existing and temporary electrical systems is higher than originally anticipated. CCO #32 was issued to maintain such facilities as ramp metering, highway lighting, traffic monitoring systems, and sign illumination within project limits that are required to remain functional. This is only for facilities that are not covered in the Contract Plans or Special Provisions. This CCO will provide funding to maintain the electrical systems until the end of the contract.

The payment for this work will be Extra Work at Force Account for an estimated cost of $25,000.00, which can be financed from the contingency fund.

This change was discussed and concurred with Patrick Treacy, HQ Construction Coordinator; Mike Forner, SFOBB Construction Manager; ~~and Ke~~n Terpstra, Project Manager. Design and Maintenance concurrence is not necessary since this CCO is only for additional funds.

No adjustment of contract time is warranted as this change does not affect the controlling operation.

CONCURRED BY:

Construction Engineer:	Ben Ghafghazi	Date 3/24/2010
Bridge Engineer:		Date
Project Engineer:		Date
Project Manager:	~~Ken Terpstra~~	Date
FHWA Rep.:		Date
Environmental:		Date
Other (specify):	Mike Forner, Principal TE	Date 4/2/10
Other (specify):	Patrick Treacy, HQ Const. Coord.	Date 4/3/10
District Prior Approval By:		Date
HQ (Issue Approve) By:		Date
Resident Engineer's Signature:		Date 3/24/2010

ESTIMATE OF COST

	THIS REQUEST	TOTAL TO DATE
ITEMS	$0.00	$0.00
FORCE ACCOUNT	$25,000.00	$50,000.00
AGREED PRICE	$0.00	$0.00
ADJUSTMENT	$0.00	$0.00
TOTAL	$25,000.00	$50,000.00

FEDERAL PARTICIPATION

☐ PARTICIPATING ☐ PARTICIPATING IN PART ☑ NONE
☐ NON-PARTICIPATING (MAINTENANCE) ☐ NON-PARTICIPATING

FEDERAL SEGREGATION (if more than one Funding Source or P.I.P. type)
☑ CCO FUNDED PER CONTRACT ☐ CCO FUNDED AS FOLLOWS

FEDERAL FUNDING SOURCE	PERCENT

ADA Notice: For individuals with sensory disabilities, this document is available in alternate formats. For information call: (916) 654-6410 or TDD (916) 654-3880 or write Records and Forms Management, 1120 N Street, MS-89, Sacramento, CA 95814.

STATE OF CALIFORNIA - DEPARTMENT OF TRANSPORTATION

CONTRACT CHANGE ORDER

Change Requested by: Engineer

CCO: 32	Suppl. No. 1	Contract No. 04 - 0120L4	Road ALA-80-1.6/2.7	FED. AID LOC.: NO FED AID

To: **M C M CONSTRUCTION INC**

You are directed to make the following changes from the plans and specifications or do the following described work not included in the plans and specifications for this contract. ***NOTE: This change order is not effective until approved by the Engineer.***

Description of work to be done, estimate of quantities and prices to be paid. (Segregate between additional work at contract price, agreed price and force account.) Unless otherwise stated, rates for rental of equipment cover only such time as equipment is actually used and no allowance will be made for idle time. This last percentage shown is the net accumulated increase or decrease from the original quantity in the Engineer's Estimate.

Additional funds for maintaining electrical systems.

Extra Work at Force Account:

Provide labor, equipment, and materials to to maintain, repair, remove, replace, and relocate existing and temporary electrical systems as determined by the Engineer. All work shall be in accordance with Section 86-1.06, "Maintaining Existing and Temporary Electrical Systems," of the Standard Specifications.

Estimated cost of Extra Work at Force Account $25,000.00

Estimated Cost: Increase ☑ **Decrease** ☐ **$25,000.00**

By reason of this order the time of completion will be adjusted as follows: 0 days

Signature	**Resident Engineer** BEN GHAFGHAZI	**Date** 3/24/2010
Signature	**Construction Engineer** Ben Ghafghazi	**Date** 3/24/2010
Signature	**Construction Engineer** Ben Ghafghazi	**Date** 4/2/2010

We the undersigned contractor, have given careful consideration to the change proposed and agree, if this proposal is approved, that we will provide all equipment, furnish the materials, except as may otherwise be noted above, and perform all services necessary for the work above specified, and will accept as full payment therefor the prices shown above.

NOTE: If you, the contractor, do not sign acceptance of this order, your attention is directed to the requirements of the specifications as to proceeding with the ordered work and filing a written protest within the time therein specified.

Signature Not Required	**(Print name and title)**	**Date**

STATE OF CALIFORNIA - DEPARTMENT OF TRANSPORTATION

CONTRACT CHANGE ORDER MEMORANDUM

DATE: 9/1/2010 Page 1 of 1

TO: AMER BATA / BEN GHAFGHAZI	FILE: E.A. 04 - 0120L4
FROM: BEN GHAFGHAZI AP22	CO-RTE-PM ALA-80-1.6/2.7
	FED. NO. NO FED AID
CCO#: 32 SUPPLEMENT#: 3 Category Code: CBSB	CONTINGENCY BALANCE (incl. this change): $1,036,318.90
COST: $45,000.00 INCREASE ☑ DECREASE ☐	HEADQUARTERS APPROVAL REQUIRED? ☐ YES ☑ NO
SUPPLEMENTAL FUNDS PROVIDED: $0.00	IS THIS REQUEST IN ACCORDANCE WITH ENVIRONMENTAL DOCUMENTS? ☑ YES ☐ NO
CCO DESCRIPTION: Add'l funds to maintain electrical sys.	**PROJECT DESCRIPTION:** Construct bridge, roadway, building and electrical system.

Original Contract Time:	Time Adj. This Change:	Previously Approved CCO Time Adjustments:	Percentage Time Adjusted: (including this change)	Total # of Unreconciled Deferred Time CCO(s): (including this change)
810 Day(s)	0 Day(s)	0 Day(s)	0 %	0

THIS CHANGE ORDER PROVIDES FOR:

Providing additional funds for maintaining, repairing, removing, replacing, and relocating existing and temporary electrical systems as determined by the Engineer. All work shall be in accordance with Section 86-1.06, "Maintaining Existing and Temporary Electrical Systems," of the Standard Specifications.

This change is necessary to maintain such facilities as ramp metering, highway lighting, traffic monitoring systems, and sign illumination within project limits that are required to remain functional. This is only for facilities that are not covered in the Contract Plans or Special Provisions.

This work is not covered by any contract items, therefore, payment for this work will be at Extra Work at Force Account for an estimated cost of $45,000.00, which can be financed from the contingency fund.

Design and Maintenance concurrence is not necessary since this work does not change any permanent features.

No adjustment of contract time is warranted as this change does not affect the controlling operation.

CONCURRED BY:

Construction Engineer:	Ben Ghafghazi	Date 9/1/10
Bridge Engineer:		Date
Project Engineer:		Date
Project Manager:		Date
FHWA Rep.:		Date
Environmental:		Date
Other (specify):		Date
Other (specify):		Date
District Prior Approval By:		Date
HQ (Issue Approve) By:		Date
Resident Engineer's Signature:		Date 9/1/2010

ESTIMATE OF COST

	THIS REQUEST	TOTAL TO DATE
ITEMS	$0.00	$0.00
FORCE ACCOUNT	$45,000.00	$95,000.00
AGREED PRICE	$0.00	$0.00
ADJUSTMENT	$0.00	$0.00
TOTAL	$45,000.00	$95,000.00

FEDERAL PARTICIPATION

☐ PARTICIPATING ☐ PARTICIPATING IN PART ☒ NONE
☐ NON-PARTICIPATING (MAINTENANCE) ☐ NON-PARTICIPATING

FEDERAL SEGREGATION (if more than one Funding Source or P.I.P. type)
☐ CCO FUNDED PER CONTRACT ☐ CCO FUNDED AS FOLLOWS

FEDERAL FUNDING SOURCE	PERCENT

ADA Notice: For individuals with sensory disabilities, this document is available in alternate formats. For information call: (916) 654-6410 or TDD (916) 654-3880 or write Records and Forms Management, 1120 N Street, MS-89, Sacramento, CA 95814.

STATE OF CALIFORNIA - DEPARTMENT OF TRANSPORTATION

CONTRACT CHANGE ORDER

Change Requested by: Engineer

CCO: 32	Suppl. No. 3	Contract No. 04 - 0120L4	Road ALA-80-1.6/2.7	FED. AID LOC.: NO FED AID

To: **M C M CONSTRUCTION INC**

You are directed to make the following changes from the plans and specifications or do the following described work not included in the plans and specifications for this contract. ***NOTE: This change order is not effective until approved by the Engineer.***

Description of work to be done, estimate of quantities and prices to be paid. (Segregate between additional work at contract price, agreed price and force account.) Unless otherwise stated, rates for rental of equipment cover only such time as equipment is actually used and no allowance will be made for idle time. This last percentage shown is the net accumulated increase or decrease from the original quantity in the Engineer's Estimate.

Provide Additional Funds

Extra Work at Force Account:

Provide additional funds for providing labor, equipment, and materials to maintain, repair, remove, replace, and relocate existing and temporary electrical systems as determined by the Engineer. All work shall be in accordance with Section 86-1.06, "Maintaining Existing and Temporary Electrical Systems," of the Standard Specifications.

Estimated cost of Extra Work at Force Account $45,000.00

Estimated Cost: Increase ☑ Decrease ☐ **$45,000.00**

By reason of this order the time of completion will be adjusted as follows: 0 days

Submitted by

Signature	Resident Engineer BEN GHAFGHAZI	Date 9/1/2010

Approval Recommended by

Signature	Construction Engineer Ben Ghafghazi	Date 9/1/2010

Engineer Approval by

Signature	Construction Manager Amer Bata	Date 9/3/10

We the undersigned contractor, have given careful consideration to the change proposed and agree, if this proposal is approved, that we will provide all equipn furnish the materials, except as may otherwise be noted above, and perform all services necessary for the work above specified, and will accept as full paymer therefor the prices shown above.

NOTE: If you, the contractor, do not sign acceptance of this order, your attention is directed to the requirements of the specifications as to proceeding with the ordered work and filing a written protest within the time therein specified.

Contractor Acceptance by

Signature Not Required	(Print name and title)	Date

STATE OF CALIFORNIA - DEPARTMENT OF TRANSPORTATION

CONTRACT CHANGE ORDER

Change Requested by: Engineer

CCO 33	Suppl. No. 0	Contract No. 04 - 0120L4	Road ALA-80-1.6/2.7	FED. AID LOC.: NO FED AID

To: **M C M CONSTRUCTION INC**

You are directed to make the following changes from the plans and specifications or do the following described work not included in the plans and specifications for this contract. ***NOTE: This change order is not effective until approved by the Engineer.***

Description of work to be done, estimate of quantities and prices to be paid. (Segregate between additional work at contract price, agreed price and force account.) Unless otherwise stated, rates for rental of equipment cover only such time as equipment is actually used and no allowance will be made for idle time. This last percentage shown is the net accumulated increase or decrease from the original quantity in the Engineer's Estimate.

Revise footing details for Bridge No. 34-0006L.

Estimate of Increase in Contract Item at Contract Price:

Item No. 130: BAR REINFORCING STEEL (EPOXY COATED)
34141 KG (+0.63%) $2.40 /KG = +$81,938.40 (+0.63%)

Total cost for Increase in Contract Item.....$81,938.40

The quantity shown herein for Item #130, Bar Reinforcing Steel (Epoxy Coated)(Bridge), when combined with the quantities specified in the Engineer's Estimate, and as modified by any previous change orders, shall be the final quantity for which payment will be made.

Adjustment of Compensation at Lump Sum:

Revise rebar details at Piers E-17L through E-22L as shown on revised plan sheets 136R1, 137R1, 138R1, 140R1, 141R1, 142R1, 143R1, 144R1, 145R1, and 146R1 per Sheets 3 of 12 through 12 of 12 of this CCO. These sheets shall replace sheets 136, 137, 138, 140, 141, 142, 143, 144, 145, and 146 of 643 of the contract plans. Work involves replacing the #57 U-Shaped reinforcement bars with circumferential confining reinforcement bars around the perimeter of the footings. Make other adjustments to rebar as shown in the attached revised plan sheets. For this work the Contractor will be paid the sum of $1,062,646.70. This sum constitutes full compensation, including markups, for this change.

Adjustment of Compensation at Agreed Lump Sum $1,062,646.70

Consideration of a time adjustment will be deferred until completion of the work specified herein. Determination of a commensurate time extension will be made in accordance with Section 10-1.14, "Progress Schedule (Critical Path Method)," of the Special Provisions and Section 8-1.07, "Liquidated Damages," of the Standard Specifications.

Estimated Cost: **Increase** ☑ **Decrease** ☐ **$1,144,585.10**

By reason of this order the time of completion will be adjusted as follows: Deferred

Submitted by:		
Signature	Resident Engineer BEN GHAFGHAZI	Date 6/25/08
Approval Recommended by:		
Signature Mike Forner	Principal TE Mike Forner	Date 6/25/08
Engineer Approval by:		
Signature Michael Forner	Principal TE Mike Forner	Date 7-14-08

We the undersigned contractor, have given careful consideration to the change proposed and agree, if this proposal is approved, that we will provide all equipment, furnish the materials, except as may otherwise be noted above, and perform all services necessary for the work above specified, and will accept as full payment therefor the prices shown above.

NOTE: If you, the contractor, do not sign acceptance of this order, your attention is directed to the requirements of the specifications as to proceeding with the ordered work and filing a written protest within the time therein specified.

Contractor Acceptance By:		
Signature	(Print name and title) EDMUNDO A. PUCHI, TREASURER	Date 7/10/08

MARK	DATE	DESCRIPTIONS	BY	CH'D	CCO#
1	4/28/08	REVISE CLOSURE WALL CONCRETE STRENGTH AND REVISE NOTE	VT	JSK	
		REVISIONS			

CONTRACT CHANGE ORDER NO. 33
SHEET 2 OF 12 04-0120L4

REGISTERED PROFESSIONAL ENGINEER VINH DIEU TRINH No. 50685 Exp. 9-30-2009 CIVIL STATE OF CALIFORNIA

STAMP IS VALID FOR REVISION 1 ONLY

To get to the Caltrans web site, go to: http://www.dot.ca.gov

DIST	COUNTY	ROUTE	KILOMETER POST TOTAL PROJECT	SHEET NO.	TOTAL SHEETS
04	Ala	80	1.6/2.7	117R1	643

Adam Wang
REGISTERED ENGINEER - CIVIL
1-29-07
PLANS APPROVAL DATE

REGISTERED PROFESSIONAL ENGINEER ADAM TH WANG No. 40402 Exp. 3-31-2007 CIVIL STATE OF CALIFORNIA

The State of California or its officers or agents shall not be responsible for the accuracy or completeness of electronic copies of this plan sheet.

T.Y. LIN / MOFFATT & NICHOL
TWO HARRISON STREET, SUITE 500
SAN FRANCISCO, CA 94105

W. KOO & ASSOCIATES, INC
625 THE CITY DRIVE SOUTH, SUITE 200
ORANGE, CA 92868

Caltrans Metric

GENERAL NOTES

Load Factor Design

Design: Bridge Design Specifications-April 2000 (LFD)
(1996 AASHTO with interims and revisions by Caltrans)
Dead Load: Includes 1675 N/m^2 for future wearing surface
Live Load: HS20-44 and alternative and permit design load
Future Mass Transit Loading:

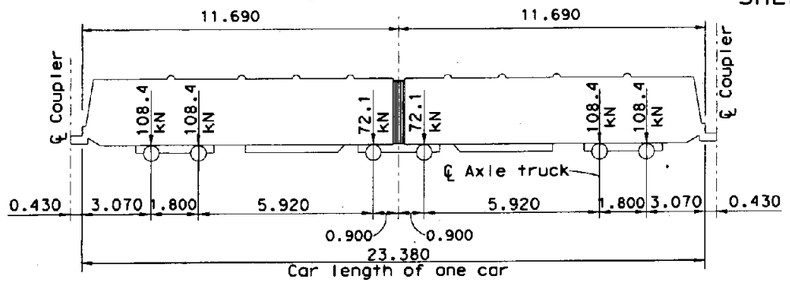

Seismic Loading: Refer to design criteria for San Francisco Bay Bridge East Span Seismic Safety Project Dated 05-01-99. See "Design ARS Curve"

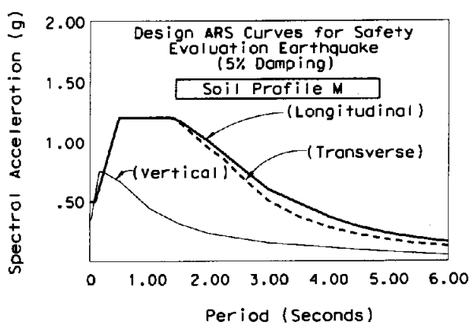

Piers E17L thru E22L & E17R thru E22R

Reinforced Concrete:

Transverse Deck Slabs
(Working Stress Design)
Fs = 140 MPa
F'c = 8 MPa
n = 10

Headed Bars:
1. At the request of the Contractor, the Engineer will consider the substitution of bars with standard hooks (90 or 135 deg) for headed bars shown on the plans, however, it is the Contractor's responsibility to demonstrate that such a subsititution can be made without compromising placement or bar spacing and cover requirements.
2. At all locations round plates shall be substituted for square plates at the ends of headed reinforcement shown on the plans, unless the Contractor can demonstrate that square plates will provide adequate clearances for placing and compaction of concrete.

Epoxy Coated Reinforcement: All reinforcement in footing, pedestals, columns, closure walls, barrier and inclined bars as stated in Hinge "FW" & West portion of Hinge "FE" shall be epoxy coated prefabicated reinforcement with purple coating.

Prestressed Concrete: See "Prestressing Notes" on "WB/EB Girder Layout" & "WB Pile Details No. 1" sheets

Pile Data: See "Pile Data" sheet

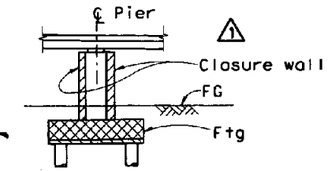

CLOSURE WALL (WB & EB)

No Scale

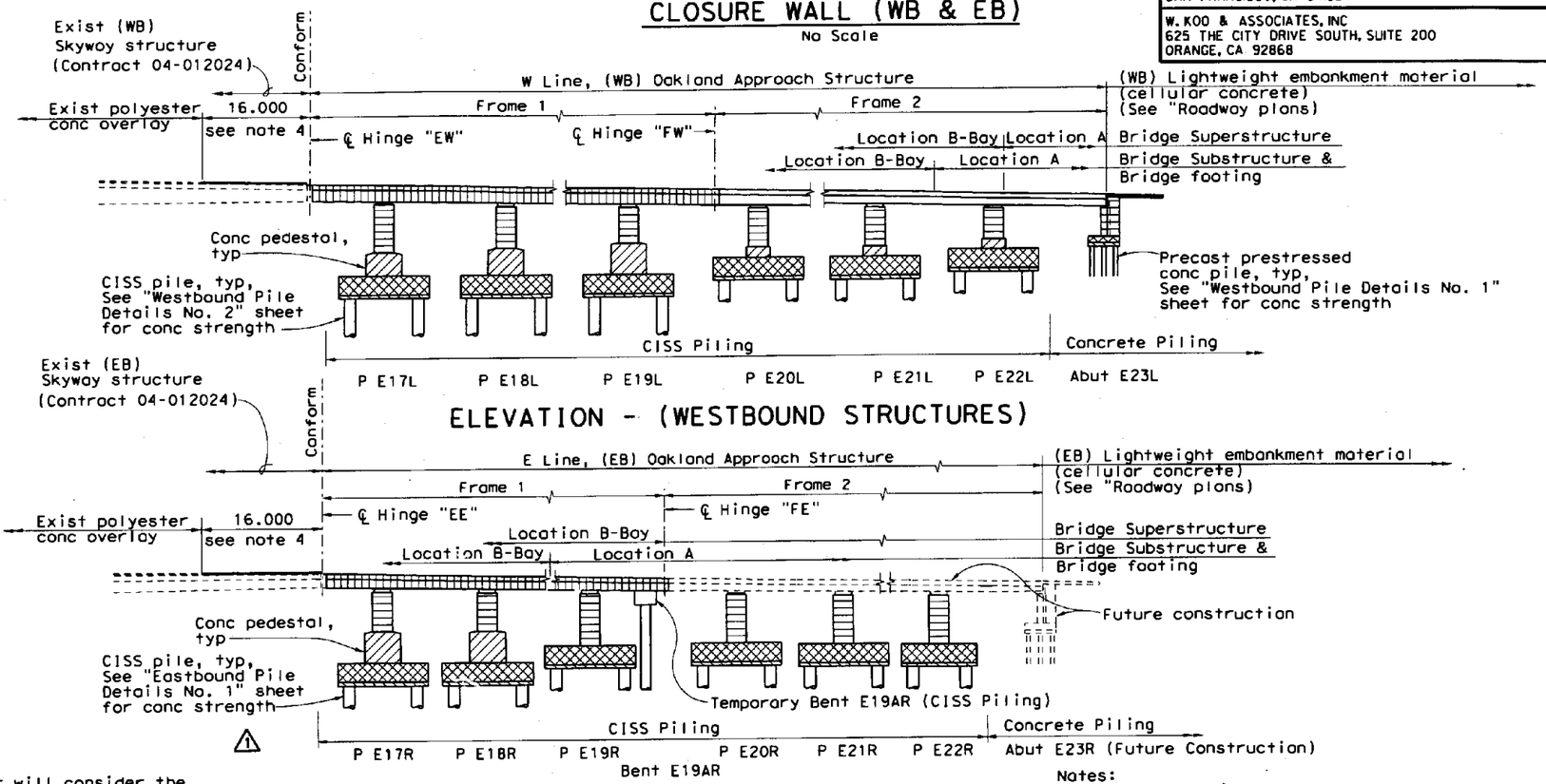

ELEVATION - (WESTBOUND STRUCTURES)

ELEVATION - (EASTBOUND STRUCTURES)

CONCRETE STRENGTH, TYPE LIMITS AND LOCATIONS

No Scale

Notes:
1. Not all piles shown.
2. Concrete strength for bikepath, see "Eastbound Bikepath Details No. 1" sheet.
3. For max concrete strength limits, see "Special Provisions" for details.
4. Place 16m polyester conc overlay over exist deck @ Skyway Structure after Hinges EW & EE coupled, see "Construction Sequence at Hinge E" sheet.
5. Utility vaults and/or precast wall are not shown, see "Service Platform Utility Vaults and Precast Wall General Plan 1" sheet.

LEGEND

4 32 MPa MPa

- Structural Concrete, Bridge (45 MPa at 28 days)
- Structural Concrete, Bridge (38 ~~MPa~~ at 28 days)
- Structural Concrete, Bridge (~~35 MPa~~ at 28 days), see note 3
- Structural Concrete, Bridge (25 MPa at 28 days, 35 MPa at 56 days), ~~see note 3~~ 4
- Structural Concrete, Bridge Footing (25 MPa at 28 days, 30 MPa at 56 days)
- Leveling Concrete (25 MPa @ 28 days)
- Structural Concrete, Approach Slab Type N (25 MPa at 28 days)

4 REVISED PER ADDENDUM No. 4 DATED MAY 24, 2007

ALL DIMENSIONS ARE IN METERS UNLESS OTHERWISE SHOWN

SAN FRANCISCO OAKLAND BAY BRIDGE
EAST SPAN SEISMIC SAFETY PROJECT

OAKLAND APPROACH STRUCTURES-PHASE 1

GENERAL NOTES NO. 1

DESIGN OVERSIGHT
SAB AKKAD FRANCISCO CARPIO BERNARD CHAN HASAN EL-NATUR
8-10-06
SIGN OFF DATE

	BY	CHECKED
DESIGN	A. Wang	A. Moubayed
DETAILS	G. Buelow	A. Moubayed
QUANTITIES	O. Jaradat	H. Haroun

PREPARED FOR THE STATE OF CALIFORNIA DEPARTMENT OF TRANSPORTATION

Adam Wang
PROJECT ENGINEER

BRIDGE NO. 34-0006L/R
KILOMETER POST 1.6

CU 04
EA 0120L1

DISREGARD PRINTS BEARING EARLIER REVISION DATES

REVISION DATES (PRELIMINARY STAGE ONLY) 5/8/03 10/20/03 8/20/04 10/29/04 2/28/05 8/24/05 11/14/05 1/13/06 4/13/06 7/28/06

SHEET 4R1 OF 224

Rev. Date: 5-18-98

ORIGINAL SCALE IN MILLIMETERS FOR REDUCED PLANS 0 10 20 30 40 50 60 70 80 90 100

FILE => ...\04-0120L1-34-006-b-gnote1-add_NoBub.dgn

USERNAME => $USER DATE PLOTTED => 6/16/2008 TIME PLOTTED => 9:52:22 AM

DIST	COUNTY	ROUTE	KILOMETER POST TOTAL PROJECT	SHEET NO.	TOTAL SHEETS
04	Ala	80	1.6/2.7	136R1	643

Adam Wang
REGISTERED ENGINEER - CIVIL
1-29-07
PLANS APPROVAL DATE

REGISTERED PROFESSIONAL ENGINEER ADAM TM WANG No. 40402 Exp. 3-31-2009 CIVIL STATE OF CALIFORNIA

The State of California or its officers or agents shall not be responsible for the accuracy or completeness of electronic copies of this plan sheet.

T.Y. LIN / MOFFATT & NICHOL
TWO HARRISON STREET, SUITE 500
SAN FRANCISCO, CA 94105

W. KOO & ASSOCIATES, INC
625 THE CITY DRIVE SOUTH, SUITE 200
ORANGE, CA 92868

To get to the Caltrans web site, go to: http://www.dot.ca.gov

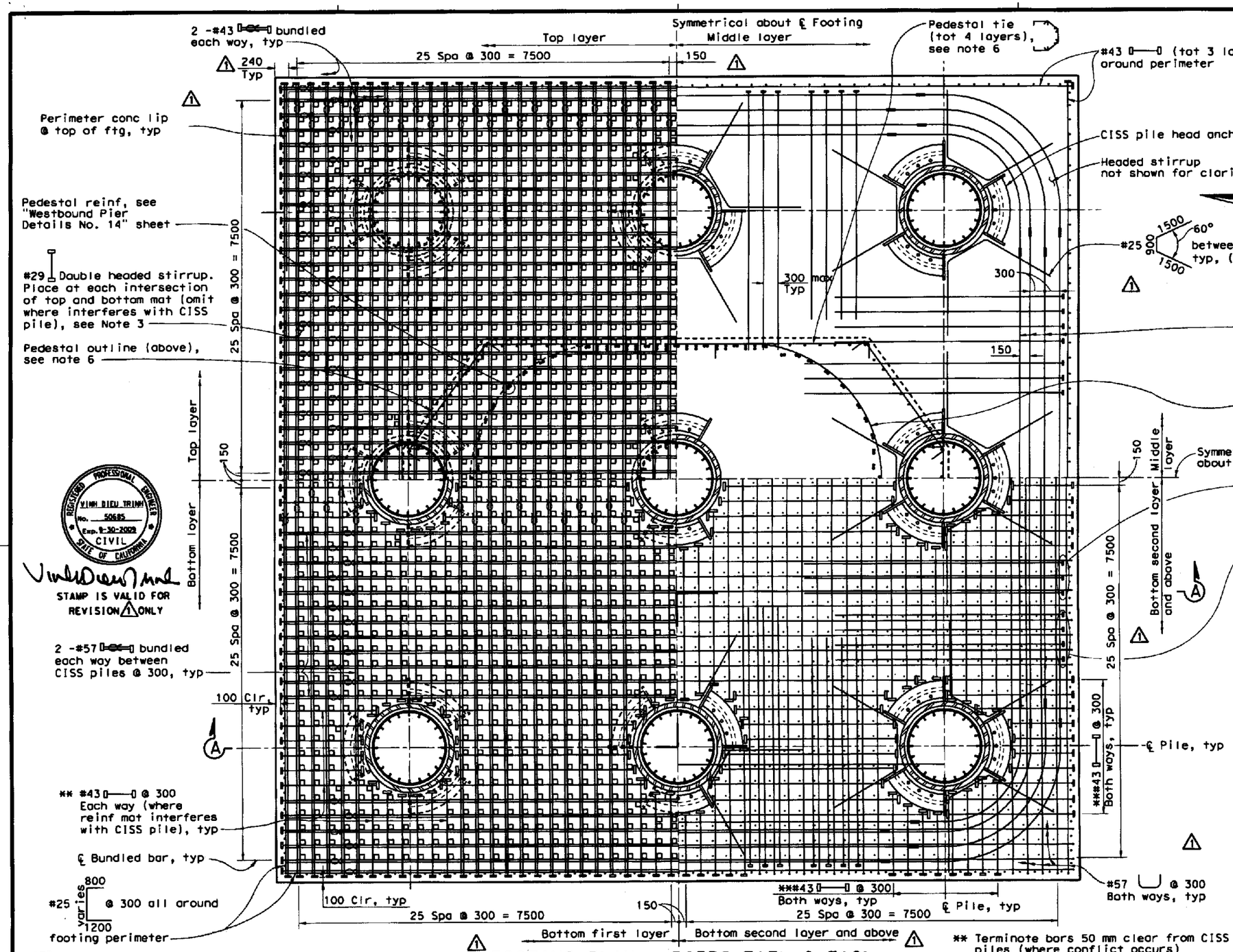

NOTE:
The Contractor shall verify all controlling field dimensions before ordering or fabricating any material

FOOTING PLAN - PIERS E17L & E19L
1:40

** Terminate bars 50 mm clear from CISS piles (where conflict occurs)

ALL DIMENSIONS ARE IN MILLIMETERS UNLESS OTHERWISE SHOWN

LEGEND:

- Denotes headed bar (both ends)
- Denotes bundled headed bar (alternate ends)
- Denotes bundled bars

NOTES:

1. For CISS pile and head anchorage details, see "WB Pile Det No. 2 & No. 3" sheets.
2. For "Section A-A" see "Westbound Footing Details No. 4" sheet.
3. Stirrups shall be spaced @ 300 max where possible. Move stirrups to clear the middle layer reinf. Min No. of stirrups shall not be less than those shown as "□" on plan.
4. Pier E17L shown, Pier E19L similar.
5. For pedestal reinf, see "Westbound pier Details No. 15" sheet.
6. Field cut pedestal reinf, if conflicts with pile.
7. All couplers shall be ultimate butt splices.

MARK	DATE	DESCRIPTIONS	BY	CH'D	CCO#
1	3/5/08	"U" BAR REVISION	AW	VT	

REVISIONS

CONTRACT CHANGE ORDER NO. 33
SHEET 3 OF 12 04-0120L4

SAN FRANCISCO OAKLAND BAY BRIDGE
EAST SPAN SEISMIC SAFETY PROJECT

OAKLAND APPROACH STRUCTURES-PHASE 1

WESTBOUND FOOTING DETAILS NO. 3

DESIGN OVERSIGHT
SAM ARKAD FRANCISCO CARPIO BERNARD CHAN HASAN EL-NATUR
8-10-06
SIGN OFF DATE

Rev. Octm 5-18-98

DESIGN	BY X. Wu	CHECKED	V. Trinh
DETAILS	BY G. Buelow	CHECKED	V. Trinh
QUANTITIES	BY O. Jaradat	CHECKED	H. Haroun

PREPARED FOR THE STATE OF CALIFORNIA DEPARTMENT OF TRANSPORTATION

Adam Wang
PROJECT ENGINEER

BRIDGE NO. 34-0006L/R
KILOMETER POST 1.6

CU 04
EA 0120L1

DISREGARD PRINTS BEARING EARLIER REVISION DATES

REVISION DATES (PRELIMINARY STAGE ONLY) 10/20/03 11/20/03 12/20/04 2/21/05 5/20/05 11/21/05 1/13/06 4/13/06 1/20/06 3/5/08

SHEET 23 OF 224

ORIGINAL SCALE IN MILLIMETERS FOR REDUCED PLANS 0 10 20 30 40 50 60 70 80 90 100

FILE => ...\04-0120L1-34-006-f-foot3.dgn

USERNAME => 82/SER DATE PLOTTED => 6/16/2008 TIME PLOTTED => 9:47:54 AM

DIST	COUNTY	ROUTE	KILOMETER POST TOTAL PROJECT	SHEET NO.	TOTAL SHEETS
04	Ala	80	1.6/2.7	137R1	643

Adam Wang
REGISTERED ENGINEER / CIVIL
1-29-07
PLANS APPROVAL DATE

REGISTERED PROFESSIONAL ENGINEER — ADAM TN WANG — No. 40402 — Exp. 3-31-2009 — CIVIL — STATE OF CALIFORNIA

The State of California or its officers or agents shall not be responsible for the accuracy or completeness of electronic copies of this plan sheet.

T.Y. LIN / MOFFATT & NICHOL
TWO HARRISON STREET, SUITE 500
SAN FRANCISCO, CA 94105

W. KOO & ASSOCIATES, INC
625 THE CITY DRIVE SOUTH, SUITE 200
ORANGE, CA 92868

To get to the Caltrans web site, go to: http://www.dot.ca.gov

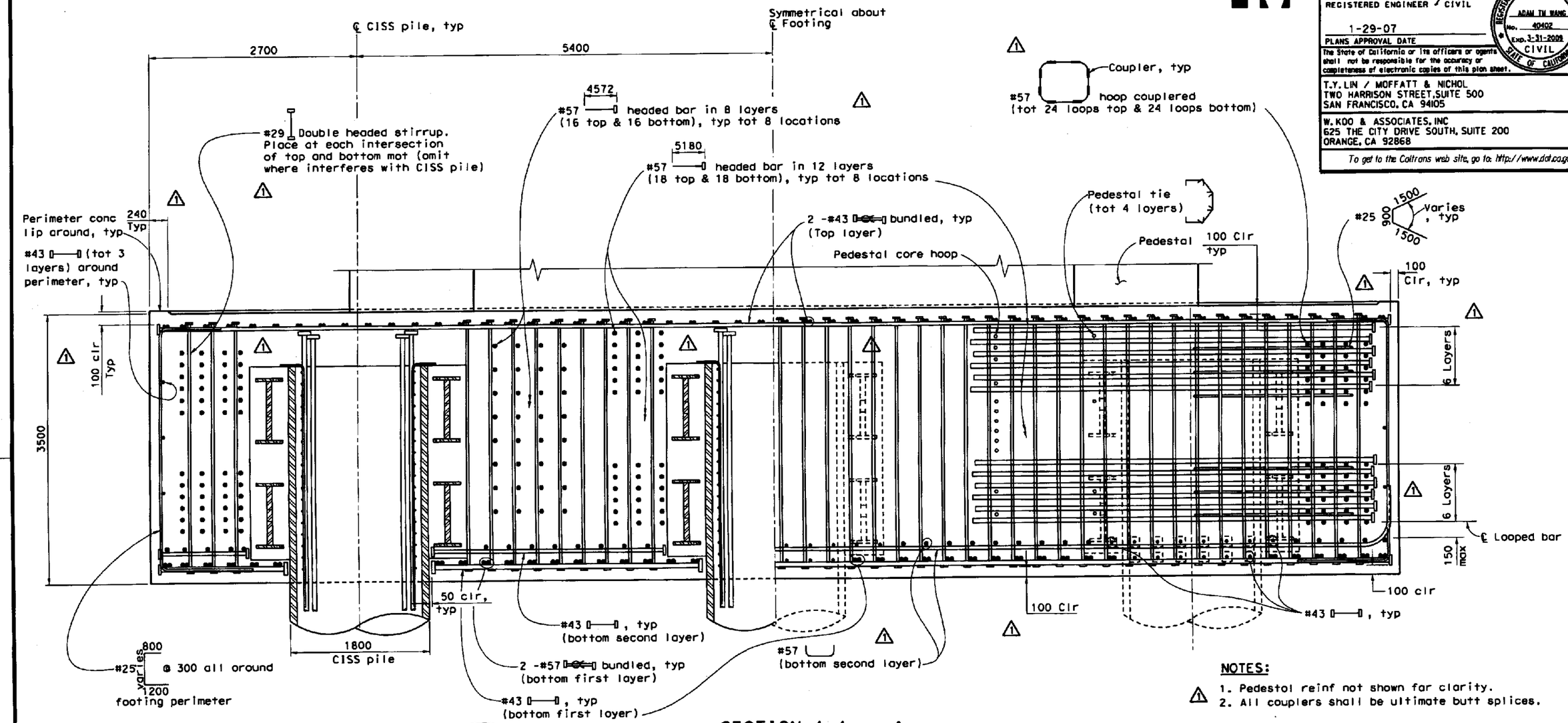

SECTION A-A
PIERS E17L & E19L
1:25

NOTES:

1. Pedestal reinf not shown for clarity.
2. All couplers shall be ultimate butt splices.

LEGEND:

- Denotes headed bar (both ends)
- Denotes bundled headed bar (alternate ends)
- Denotes bundled bars

MARK	DATE	DESCRIPTIONS	BY	CH'D	CCO#
1	3/5/08	"U" BAR REVISION	AW	VT	

REVISIONS

CONTRACT CHANGE ORDER NO. 33
SHEET 4 OF 12 04-0120L4

REGISTERED PROFESSIONAL ENGINEER — VINH DIEU TRINH — No. 50685 — Exp. 9-30-2009 — CIVIL — STATE OF CALIFORNIA

STAMP IS VALID FOR REVISION 1 ONLY

ALL DIMENSIONS ARE IN MILLIMETERS UNLESS OTHERWISE SHOWN

SAN FRANCISCO OAKLAND BAY BRIDGE
EAST SPAN SEISMIC SAFETY PROJECT

OAKLAND APPROACH STRUCTURES-PHASE 1

WESTBOUND FOOTING DETAILS NO. 4

DESIGN OVERSIGHT: SAM AKKAD, FRANCISCO CARPIO, BERNARD CHAN, HASAN EL-NATUR
8-10-06
SIGN OFF DATE

Rev. Date: 5-18-98

	BY	CHECKED
DESIGN	X. Wu	V. Trinh
DETAILS	G. Buelow	V. Trinh
QUANTITIES	O. Jaradat	H. Haroun

PREPARED FOR THE STATE OF CALIFORNIA DEPARTMENT OF TRANSPORTATION

Adam Wang
PROJECT ENGINEER

BRIDGE NO. 34-0006L/R
KILOMETER POST 1.6

CU 04
EA 0120L1

DISREGARD PRINTS BEARING EARLIER REVISION DATES

REVISION DATES (PRELIMINARY STAGE ONLY): 10/20/03 2/20/04 10/29/04 2/28/05 8/24/05 11/14/06 1/31/06 4/13/06 3/28/06 3/5/08

SHEET 24 OF 224

ORIGINAL SCALE IN MILLIMETERS FOR REDUCED PLANS 0 10 20 30 40 50 60 70 80 90 100

FILE => ...\04-0120L1-34-006-f-foot4.dgn

USERNAME => $USER DATE PLOTTED => 6/16/2008 TIME PLOTTED => 9:48:25 AM

DIST	COUNTY	ROUTE	KILOMETER POST TOTAL PROJECT	SHEET NO.	TOTAL SHEETS
04	Ala	80	1.6/2.7	138R1	643

Adam Wang
REGISTERED ENGINEER - CIVIL
1-29-07
PLANS APPROVAL DATE

The State of California or its officers or agents shall not be responsible for the accuracy or completeness of electronic copies of this plan sheet.

T.Y. LIN / MOFFATT & NICHOL
TWO HARRISON STREET, SUITE 500
SAN FRANCISCO, CA 94105

W. KOO & ASSOCIATES, INC
625 THE CITY DRIVE SOUTH, SUITE 200
ORANGE, CA 92868

To get to the Caltrans web site, go to: http://www.dot.ca.gov

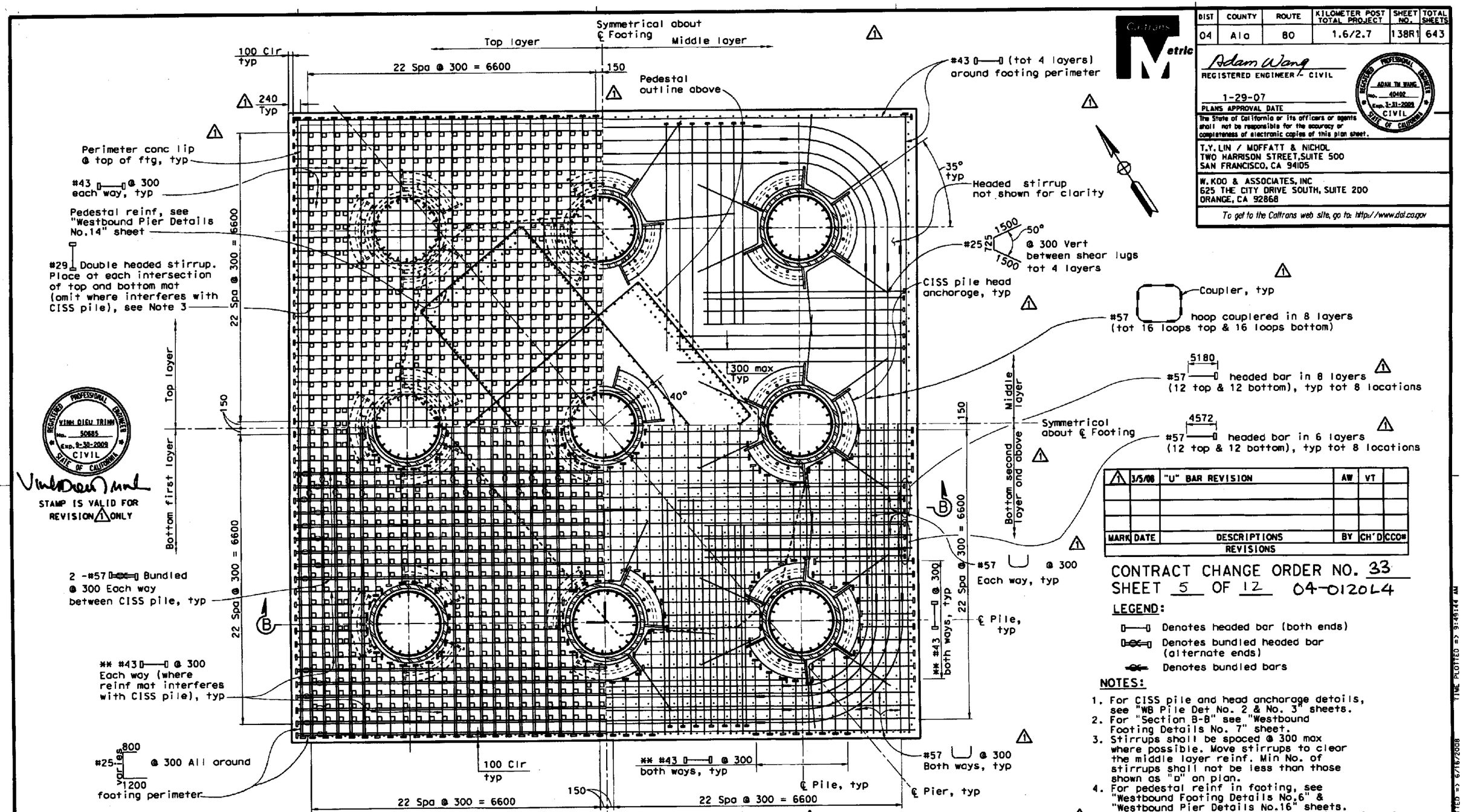

STAMP IS VALID FOR REVISION 1 ONLY

VINH DIEU TRINH
No. 50685
Exp. 9-30-2009
CIVIL
STATE OF CALIFORNIA

1 FOOTING PLAN - PIER E18L
1:40

** Terminate bars 50 mm clear from CISS piles (where conflict occurs)

ALL DIMENSIONS ARE IN MILLIMETERS UNLESS OTHERWISE SHOWN

NOTE:
The Contractor shall verify all controlling field dimensions before ordering or fabricating any material.

MARK	DATE	DESCRIPTIONS	BY	CH'D	CCO#
1	3/5/08	"U" BAR REVISION	AW	VT	

REVISIONS

CONTRACT CHANGE ORDER NO. 33
SHEET 5 OF 12 04-0120L4

LEGEND:

- Denotes headed bar (both ends)
- Denotes bundled headed bar (alternate ends)
- Denotes bundled bars

NOTES:

1. For CISS pile and head anchorage details, see "WB Pile Det No. 2 & No. 3" sheets.
2. For "Section B-B" see "Westbound Footing Details No. 7" sheet.
3. Stirrups shall be spaced @ 300 max where possible. Move stirrups to clear the middle layer reinf. Min No. of stirrups shall not be less than those shown as "D" on plan.
4. For pedestal reinf in footing, see "Westbound Footing Details No.6" & "Westbound Pier Details No.16" sheets.
5. 1 Field cut pedestal reinf, if conflicts with pile.
6. All couplers shall be ultimate butt splices.

SAN FRANCISCO OAKLAND BAY BRIDGE
EAST SPAN SEISMIC SAFETY PROJECT

OAKLAND APPROACH STRUCTURES-PHASE 1

WESTBOUND FOOTING DETAILS NO.5

DESIGN OVERSIGHT
SAM AKRAD FRANCISCO CARPIO BERNARD CHAN HASAN EL-NATUR
8-10-06
SIGN OFF DATE

Rev. Date: 5-18-98

DESIGN	BY X. Wu	CHECKED V. Trinh	
DETAILS	BY A. Segura	CHECKED V. Trinh	
QUANTITIES	BY O. Jaradat	CHECKED H. Haroun	

PREPARED FOR THE STATE OF CALIFORNIA DEPARTMENT OF TRANSPORTATION

Adam Wang
PROJECT ENGINEER

CU 04
EA 0120L1

BRIDGE NO. 34-0006L/R
KILOMETER POST 1.6

DISREGARD PRINTS BEARING EARLIER REVISION DATES

REVISION DATES (PRELIMINARY STAGE ONLY) 12/20/07 2/20/08 10/20/08 2/20/09 5/20/09 11/20/09 1/20/10 4/20/10 7/20/10 1/5/11

SHEET 25 OF 224

ORIGINAL SCALE IS MILLIMETERS FOR REDUCED PLANS 0 10 20 30 40 50 60 70 80 90 100

FILE => ...\04-0120L1-34-006-f-foot5.dgn

USERNAME => BUSER DATE PLOTTED => 6/16/2008 TIME PLOTTED => 9:49:44 AM

DIST	COUNTY	ROUTE	KILOMETER POST TOTAL PROJECT	SHEET NO.	TOTAL SHEETS
04	Ala	80	1.6/2.7	140R1	643

Adam Wang
REGISTERED ENGINEER - CIVIL
1-29-07
PLANS APPROVAL DATE

REGISTERED PROFESSIONAL ENGINEER ADAM TN WANG NO. 40402 EXP. 3-31-2009 CIVIL STATE OF CALIFORNIA

The State of California or its officers or agents shall not be responsible for the accuracy or completeness of electronic copies of this plan sheet.

T.Y. LIN / MOFFATT & NICHOL
TWO HARRISON STREET, SUITE 500
SAN FRANCISCO, CA 94105

W. KOO & ASSOCIATES, INC
625 THE CITY DRIVE SOUTH, SUITE 200
ORANGE, CA 92868

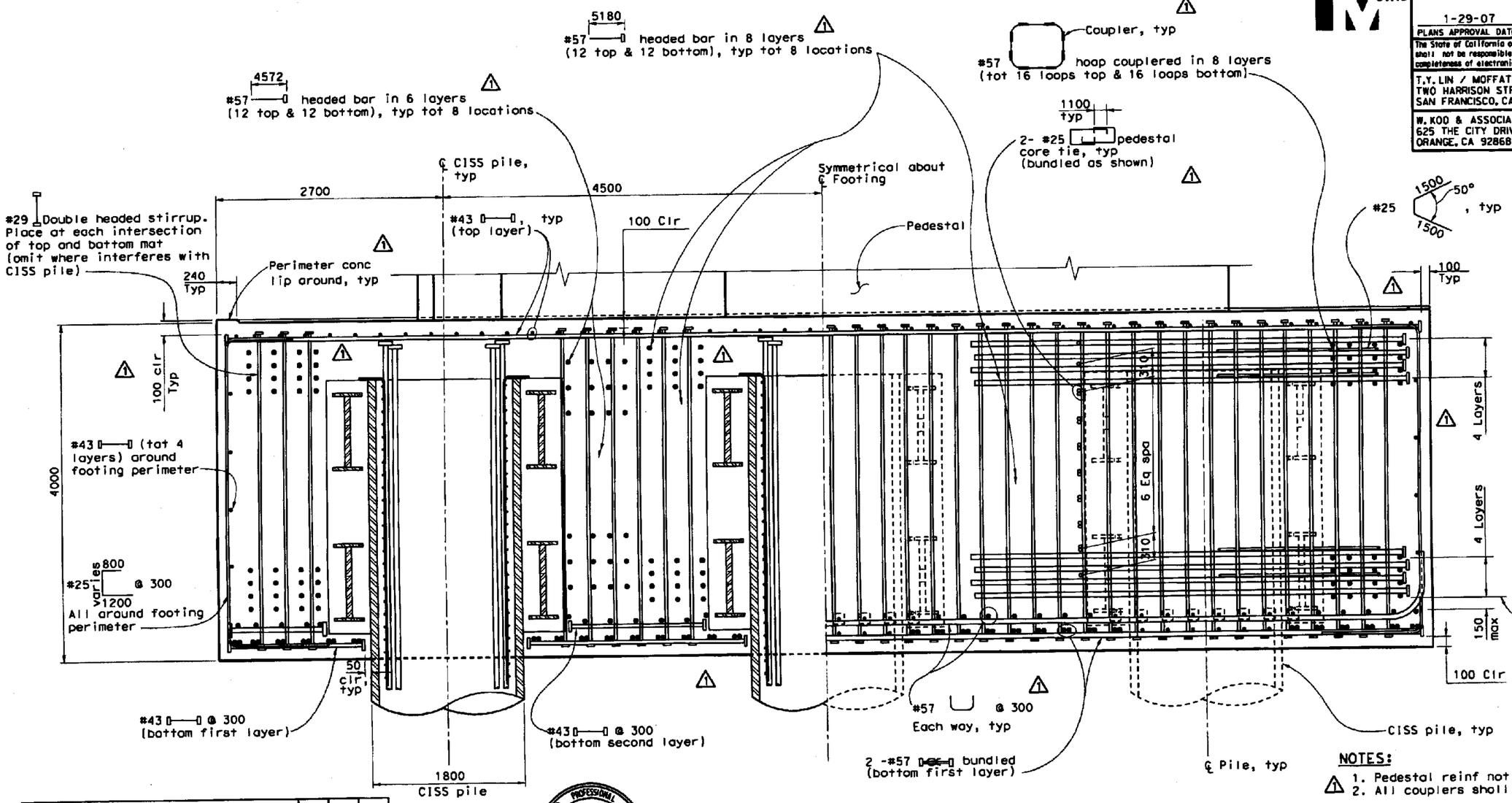

SECTION B-B
PIER E18L
1:25

NOTES:
1. Pedestal reinf not shown for clarity.
2. All couplers shall be ultimate butt splices.

LEGEND:
- Denotes headed bar (both ends)
- Denotes bundled headed bar (alternate ends)
- Denotes bundled bars

MARK	DATE	DESCRIPTIONS	BY	CH'D	CCO#
1	3/5/08	"U" BAR REVISION	AW	VT	

REVISIONS

REGISTERED PROFESSIONAL ENGINEER NINH DIEU TRINH NO. 50685 EXP. 9-30-2009 CIVIL STATE OF CALIFORNIA

STAMP IS VALID FOR REVISION 1 ONLY

CONTRACT CHANGE ORDER NO. 33
SHEET 6 OF 12 04-0120L4

ALL DIMENSIONS ARE IN MILLIMETERS UNLESS OTHERWISE SHOWN

SAN FRANCISCO OAKLAND BAY BRIDGE
EAST SPAN SEISMIC SAFETY PROJECT

OAKLAND APPROACH STRUCTURES-PHASE 1

WESTBOUND FOOTING DETAILS NO. 7

DESIGN OVERSIGHT
SAM AKKAR FRANCISCO CARPIO BERNARD CHAN HASAN EL-NATUR
8-10-06
SIGN OFF DATE

	BY	CHECKED
DESIGN	X. Wu	A. Moubayed
DETAILS	A. Segura	A. Moubayed
QUANTITIES	O. Jaradat	H. Haraun

PREPARED FOR THE STATE OF CALIFORNIA DEPARTMENT OF TRANSPORTATION

Adam Wang
PROJECT ENGINEER

CU 04
EA 0120L1

BRIDGE NO. 34-0006L/R
KILOMETER POST 1.6

DISREGARD PRINTS BEARING EARLIER REVISION DATES

REVISION DATES (PRELIMINARY STAGE ONLY) 10/20/06 8/24/06 10/20/06 2/20/06 5/24/06 11/24/06 1/22/06 6/22/06 7/28/06 3/5/08

SHEET 27 OF 224

ORIGINAL SCALE IN MILLIMETERS FOR REDUCED PLANS 0 10 20 30 40 50 60 70 80 90 100

FILE => ...\04-0120L1-34-006-f-foot7.dgn

Rev. Date: 5-18-98

USERNAME => $USER DATE PLOTTED => 6/16/2008 TIME PLOTTED => 9:50:02 AM

DIST	COUNTY	ROUTE	KILOMETER POST TOTAL PROJECT	SHEET NO.	TOTAL SHEETS
04	Ala	80	1.6/2.7	141R1	643

Adam Wang
REGISTERED ENGINEER / CIVIL
1-29-07
PLANS APPROVAL DATE

REGISTERED PROFESSIONAL ENGINEER ADAM TN WANG No. 40402 Exp. 3-31-2009 CIVIL STATE OF CALIFORNIA

The State of California or its officers or agents shall not be responsible for the accuracy or completeness of electronic copies of this plan sheet.

T.Y. LIN / MOFFATT & NICHOL
TWO HARRISON STREET, SUITE 500
SAN FRANCISCO, CA 94105

W. KOO & ASSOCIATES, INC
625 THE CITY DRIVE SOUTH, SUITE 200
ORANGE, CA 92868

To get to the Caltrans web site, go to: http://www.dot.ca.gov

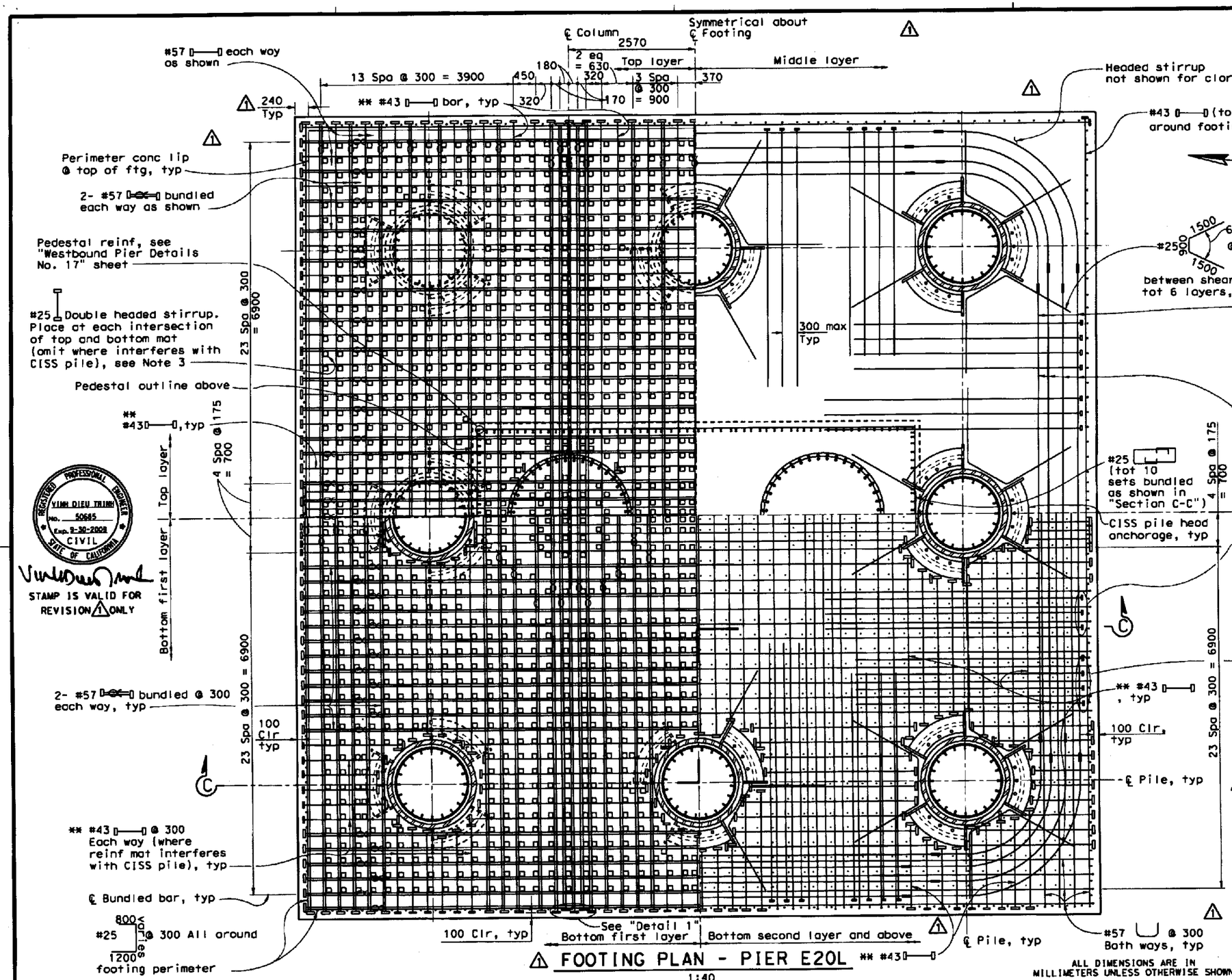

FOOTING PLAN - PIER E20L
1:40

ALL DIMENSIONS ARE IN MILLIMETERS UNLESS OTHERWISE SHOWN

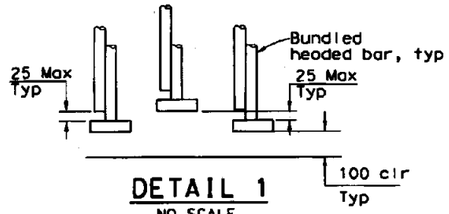

DETAIL 1
NO SCALE

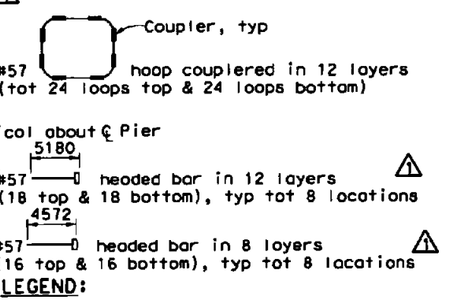

LEGEND:
- Denotes headed bar (both ends)
- Denotes bundled headed bar (alternate ends)
- Denotes bundled bars

NOTES:
1. For CISS pile and head anchorage details, see "Westbound Pile Det No. 2 & No. 3" sheets.
2. For "Section C-C" see "Westbound Footing Details No. 9" sheet.
3. Stirrups shall be spaced @ 300 Max where possible. Move stirrups to clear the middle layer reinf. Min No. of stirrups shall not be less than those shown as "□" on plan.
4. Field cut pedestal reinf, if conflicts with pile.
5. All couplers shall be ultimate butt splices.

MARK	DATE	DESCRIPTIONS	BY	CH'D	CCOM
1	3/5/08	"U" BAR REVISION	AW	VT	
		REVISIONS			

CONTRACT CHANGE ORDER NO. 33
SHEET 7 OF 12 04-0120L4

STAMP IS VALID FOR REVISION 1 ONLY

REGISTERED PROFESSIONAL ENGINEER VINH DIEU TRINH No. 50645 Exp. 9-30-2008 CIVIL STATE OF CALIFORNIA

DESIGN OVERSIGHT
SAM AKKAD FRANCISCO CARPIO BERNARD CHAN HASAN EL-NATUR
8-10-06
SIGN OFF DATE
Rev. Date: 5-18-98

DESIGN	X. Wu	V. Trinh	
DETAILS	A. Segura	V. Trinh	
QUANTITIES	O. Joradat	H. Haroun	

PREPARED FOR THE STATE OF CALIFORNIA DEPARTMENT OF TRANSPORTATION

Adam Wang
PROJECT ENGINEER

CU 04
EA 0120L1

BRIDGE NO. 34-0006L/R
KILOMETER POST 1.6

SAN FRANCISCO OAKLAND BAY BRIDGE
EAST SPAN SEISMIC SAFETY PROJECT

OAKLAND APPROACH STRUCTURES-PHASE 1

WESTBOUND FOOTING DETAILS NO. 8

DISREGARD PRINTS BEARING EARLIER REVISION DATES
REVISION DATES (PRELIMINARY STAGE ONLY) 10/20/03 8/24/04 10/27/04 2/24/05 5/24/05 11/21/05 12/14/05 4/21/06 7/20/06 3/5/08
SHEET 28 OF 224

ORIGINAL SCALE IN MILLIMETERS FOR REDUCED PLANS 0 10 20 30 40 50 60 70 80 90 100

FILE => ...\04-0120L1-34-006-f-foot8.dgn

USERNAME => RUSER DATE PLOTTED => 6/16/2008 TIME PLOTTED => 9:50:21 AM

MARK	DATE	DESCRIPTIONS	BY	CH'D	CCO#
1	3/5/08	"U" BAR REVISION	AW	VT	

REVISIONS

CONTRACT CHANGE ORDER NO. 33
SHEET 8 OF 12 04-0120L4

PROFESSIONAL ENGINEER — VINH DIEU TRINH — No. 50685 — Exp. 9-30-2009 — CIVIL — STATE OF CALIFORNIA

STAMP IS VALID FOR REVISION 1 ONLY

Caltrans Metric

DIST	COUNTY	ROUTE	KILOMETER POST TOTAL PROJECT	SHEET NO.	TOTAL SHEETS
04	Ala	80	1.6/2.7	142R1	643

Adam Wang
REGISTERED ENGINEER - CIVIL
1-29-07
PLANS APPROVAL DATE

PROFESSIONAL ENGINEER — ADAM TW WANG — No. 40402 — Exp. 3-31-2009 — CIVIL — STATE OF CALIFORNIA

The State of California or its officers or agents shall not be responsible for the accuracy or completeness of electronic copies of this plan sheet.

T.Y. LIN / MOFFATT & NICHOL
TWO HARRISON STREET, SUITE 500
SAN FRANCISCO, CA 94105

W. KOO & ASSOCIATES, INC
625 THE CITY DRIVE SOUTH, SUITE 200
ORANGE, CA 92868

To get to the Caltrans web site, go to: http://www.dot.ca.gov

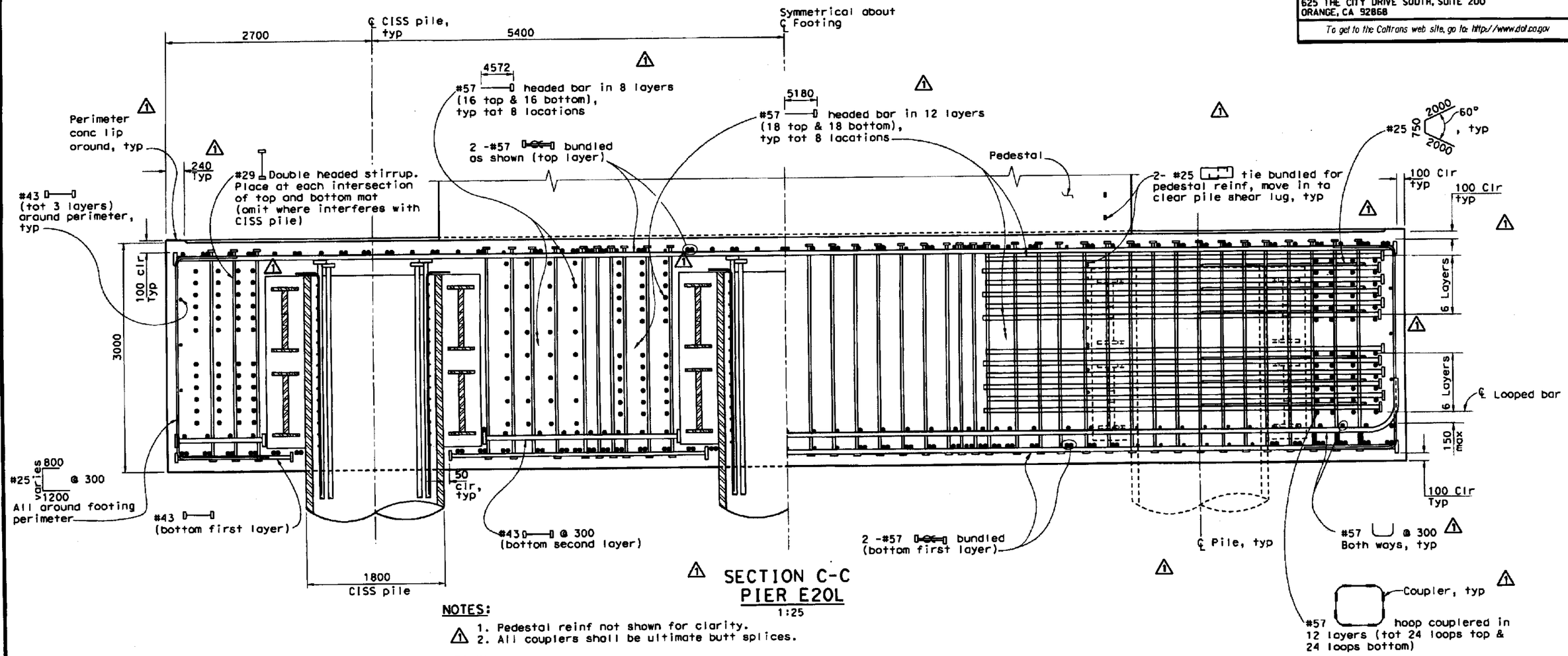

SECTION C-C
PIER E20L
1:25

NOTES:

1. Pedestal reinf not shown for clarity.
2. All couplers shall be ultimate butt splices.

LEGEND:

Denotes headed bar (both ends)

Denotes bundled headed bar (alternate ends)

Denotes bundled bars

ALL DIMENSIONS ARE IN MILLIMETERS UNLESS OTHERWISE SHOWN

DESIGN OVERSIGHT
SAB AKKAD FRANCISCO CARPIO BERNARD CHAN HASAN EL-HATUR
8-10-06
SIGN OFF DATE
Rev. Date: 5-18-98

DESIGN	BY X. Wu	CHECKED V. Trinh	
DETAILS	BY A. Segura	CHECKED V. Trinh	
QUANTITIES	BY O. Jaradat	CHECKED H. Haroun	

PREPARED FOR THE STATE OF CALIFORNIA DEPARTMENT OF TRANSPORTATION

Adam Wang
PROJECT ENGINEER

CU 04
EA 0120L1

BRIDGE NO. 34-0006L/R
KILOMETER POST 1.6

DISREGARD PRINTS BEARING EARLIER REVISION DATES

REVISION DATES (PRELIMINARY STAGE ONLY) 10/20/05 8/28/06 10/27/06 2/23/06 5/30/06 11/21/06 1/31/06 6/1/06 7/28/06 3/5/08

SHEET 29 OF 224

ORIGINAL SCALE IN MILLIMETERS FOR REDUCED PLANS 0 10 20 30 40 50 60 70 80 90 100

FILE => ...\04-0120L1-34-006-f-foot9.dgn

SAN FRANCISCO OAKLAND BAY BRIDGE
EAST SPAN SEISMIC SAFETY PROJECT

OAKLAND APPROACH STRUCTURES-PHASE 1

WESTBOUND FOOTING DETAILS NO. 9

USERNAME => $USER DATE PLOTTED => 6/16/2008 TIME PLOTTED => 9:50:39 AM

DIST	COUNTY	ROUTE	KILOMETER POST TOTAL PROJECT	SHEET NO.	TOTAL SHEETS
04	Ala	80	1.6/2.7	143R1	643

Adam Wang
REGISTERED ENGINEER - CIVIL
1-29-07
PLANS APPROVAL DATE

REGISTERED PROFESSIONAL ENGINEER ADAM TM WANG No. 40402 Exp. 9-31-2009 CIVIL STATE OF CALIFORNIA

The State of California or its officers or agents shall not be responsible for the accuracy or completeness of electronic copies of this plan sheet.

T.Y. LIN / MOFFATT & NICHOL
TWO HARRISON STREET, SUITE 500
SAN FRANCISCO, CA 94105

W. KOO & ASSOCIATES, INC
625 THE CITY DRIVE SOUTH, SUITE 200
ORANGE, CA 92868

To get to the Caltrans web site, go to: http://www.dot.ca.gov

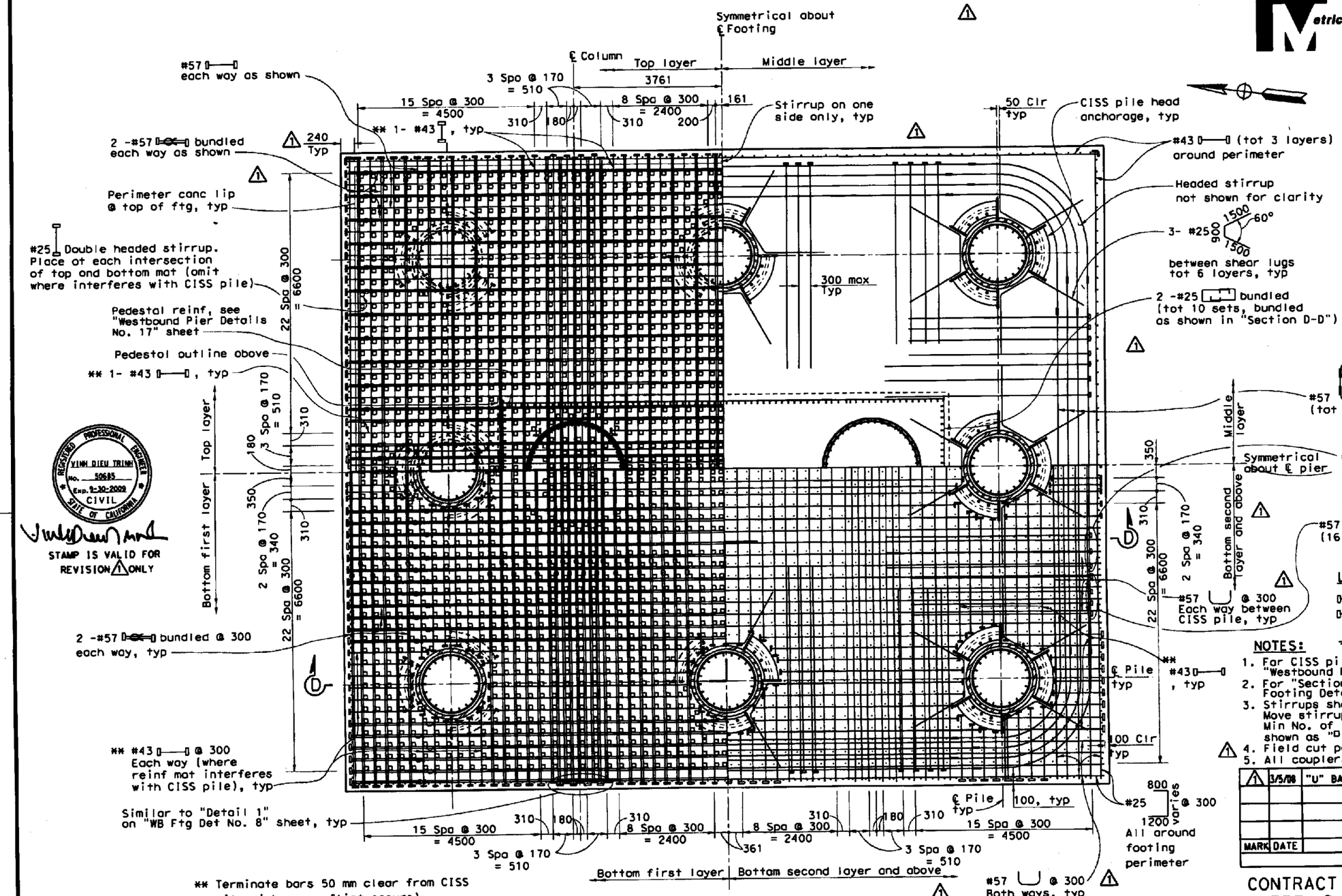

STAMP IS VALID FOR REVISION ⚠ ONLY

REGISTERED PROFESSIONAL ENGINEER VINH DIEU TRINH No. 50685 Exp. 9-30-2009 CIVIL STATE OF CALIFORNIA

NOTE:

The Contractor shall verify all controlling field dimensions before ordering or fabricating any material.

** Terminate bars 50 mm clear from CISS piles (where conflict occurs)

⚠ FOOTING PLAN - PIER E21L

1:50

ALL DIMENSIONS ARE IN MILLIMETERS UNLESS OTHERWISE SHOWN

LEGEND:

- Denotes headed bar (both ends)
- Denotes headed bar (alternate end) bundled
- Denotes bundled bars

NOTES:

1. For CISS pile and head anchorage details, see "Westbound Pile Det No. 2 & No. 3" sheets.
2. For "Section D-D" see "Westbound Footing Details No. 11" sheet.
3. Stirrups shall be spaced @ 300 Max where possible. Move stirrups to clear the middle layer reinf. Min No. of stirrups shall not be less than those shown as "D" on plan.
4. ⚠ Field cut pedestal reinf, if conflicts with pile.
5. All couplers shall be ultimate butt splices.

MARK	DATE	DESCRIPTIONS	BY	CH'D	CCO#
⚠	3/5/08	"U" BAR REVISION	AW	VT	

REVISIONS

CONTRACT CHANGE ORDER NO. 33
SHEET 9 OF 12

SAN FRANCISCO OAKLAND BAY BRIDGE
EAST SPAN SEISMIC SAFETY PROJECT

OAKLAND APPROACH STRUCTURES-PHASE 1

WESTBOUND FOOTING DETAILS NO. 10

DESIGN OVERSIGHT: SAM AKBAR, FRANCISCO CARPIO, BERNARD CHAN, HASAN EL-NATUR
8-10-06
SIGN OFF DATE

Rev. Date: 5-18-99

DESIGN	BY X. Wu	CHECKED V. Trinh	
DETAILS	BY A. Segura	CHECKED V. Trinh	
QUANTITIES	BY O. Jaradat	CHECKED H. Haroun	

ORIGINAL SCALE IN MILLIMETERS FOR REDUCED PLANS 0 10 20 30 40 50 60 70 80 90 100

PREPARED FOR THE STATE OF CALIFORNIA DEPARTMENT OF TRANSPORTATION

Adam Wang
PROJECT ENGINEER

CU 04
EA 0120L1

BRIDGE NO. 34-0006L/R
KILOMETER POST 1.6

DISREGARD PRINTS BEARING EARLIER REVISION DATES

REVISION DATES (PRELIMINARY STAGE ONLY) 10/20/03 1/20/04 10/20/04 2/10/05 5/20/05 11/20/05 1/20/06 1/20/06 1/20/06 2/1/06 2/1/06

SHEET 30 OF 224

FILE => ...\04-012011-34-006-f-footx10.dgn

USERNAME => BUSER DATE PLOTTED => 6/16/2008 TIME PLOTTED => 9:50:57 AM

DIST	COUNTY	ROUTE	KILOMETER POST TOTAL PROJECT	SHEET NO.	TOTAL SHEETS
04	Ala	80	1.6/2.7	144R1	643

Adam Wang
REGISTERED ENGINEER - CIVIL
1-29-07
PLANS APPROVAL DATE

REGISTERED PROFESSIONAL ENGINEER ADAM TM WANG No. 40402 Exp. 3-31-2009 CIVIL STATE OF CALIFORNIA

The State of California or its officers or agents shall not be responsible for the accuracy or completeness of electronic copies of this plan sheet.

T.Y. LIN / MOFFATT & NICHOL
TWO HARRISON STREET, SUITE 500
SAN FRANCISCO, CA 94105

W. KOO & ASSOCIATES, INC
625 THE CITY DRIVE SOUTH, SUITE 200
ORANGE, CA 92868

To get to the Caltrans web site, go to: http://www.dot.ca.gov

Caltrans Metric

MARK	DATE	DESCRIPTIONS	BY	CH'D	CCO#
1	3/5/08	"U" BAR REVISION	AW	VT	

REVISIONS

REGISTERED PROFESSIONAL ENGINEER VINH DIEU TRINH No. 50685 Exp. 9-30-2009 CIVIL STATE OF CALIFORNIA

CONTRACT CHANGE ORDER NO. 33
SHEET 10 OF 12 04-0120L4

STAMP IS VALID FOR REVISION 1 ONLY

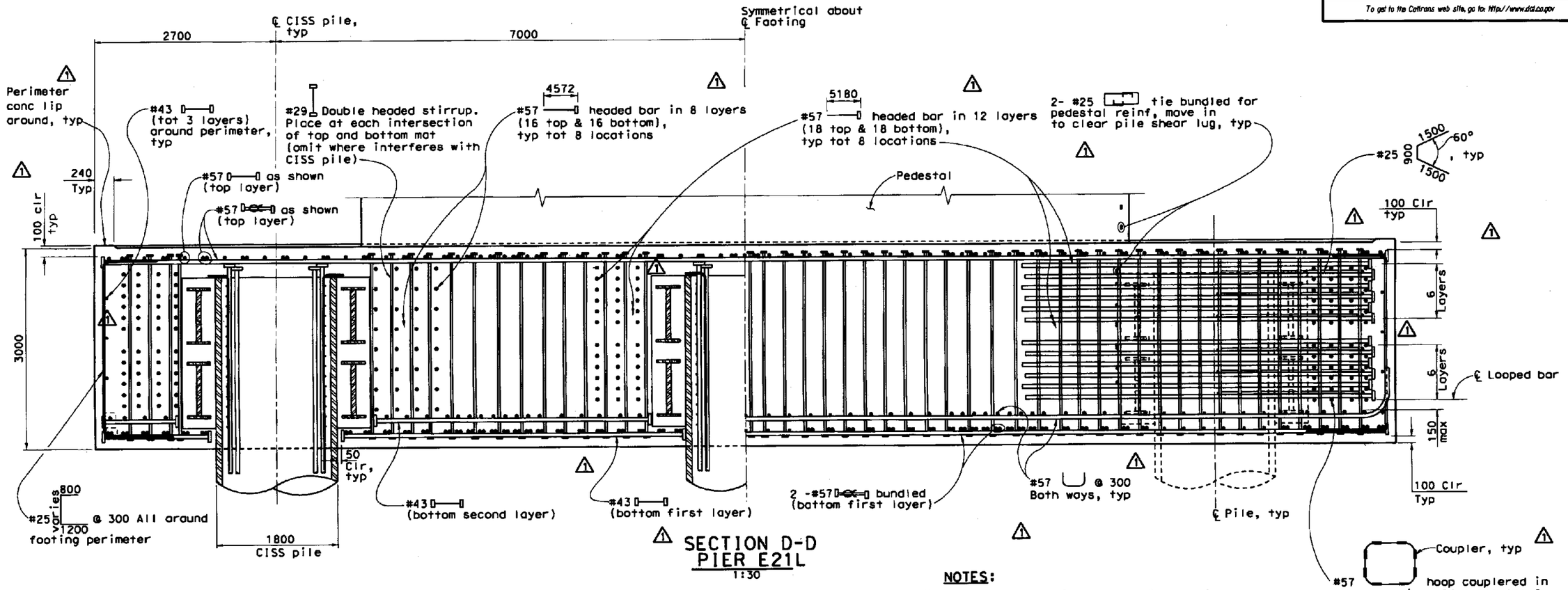

SECTION D-D
PIER E21L
1:30

NOTES:
1. Pedestal reinf not shown for clarity.
2. All couplers shall be ultimate butt splices.

LEGEND
- Denotes headed bar (both ends)
- Denotes bundled headed bar (alternate ends)
- Denotes bundled bars

Note:
The Contractor shall verify all controlling field dimensions before ordering or fabricating any material

ALL DIMENSIONS ARE IN MILLIMETERS UNLESS OTHERWISE SHOWN

DESIGN OVERSIGHT
SAM AKKAD FRANCISCO CARPIO BERNARD CHAN HASAN EL-NATUR
8-10-06
SIGN OFF DATE
Rev. Date: 5-18-98

DESIGN	BY X. Wu	CHECKED V. Trinh
DETAILS	BY A. Seguro	CHECKED V. Trinh
QUANTITIES	BY O. Jaradat	CHECKED H. Haroun

ORIGINAL SCALE IN MILLIMETERS FOR REDUCED PLANS 0 10 20 30 40 50 60 70 80 90 100

PREPARED FOR THE STATE OF CALIFORNIA DEPARTMENT OF TRANSPORTATION

Adam Wang
PROJECT ENGINEER

CU 04
EA 0120L1

BRIDGE NO. 34-0006L/R
KILOMETER POST 1.6

DISREGARD PRINTS BEARING EARLIER REVISION DATES

REVISION DATES (PRELIMINARY STAGE ONLY) 10/20/03 1/29/04 10/27/04 2/28/05 5/24/05 11/21/05 1/31/06 4/3/06 7/28/06 3/5/08

SHEET 31 OF 224

SAN FRANCISCO OAKLAND BAY BRIDGE
EAST SPAN SEISMIC SAFETY PROJECT

OAKLAND APPROACH STRUCTURES-PHASE 1

WESTBOUND FOOTING DETAILS NO. 11

FILE => ...\04-0120L1-34-006-f-footx11.dgn

USERNAME => BUSER DATE PLOTTED => 6/16/2008 TIME PLOTTED => 9:51:18 AM

DIST	COUNTY	ROUTE	KILOMETER POST TOTAL PROJECT	SHEET NO.	TOTAL SHEETS
04	Ala	80	1.6/2.7	145R1	643

Adam Wang
REGISTERED ENGINEER - CIVIL
1-29-07
PLANS APPROVAL DATE

REGISTERED PROFESSIONAL ENGINEER ADAM TW WANG No. 40402 Exp. 3-31-2009 CIVIL STATE OF CALIFORNIA

The State of California or its officers or agents shall not be responsible for the accuracy or completeness of electronic copies of this plan sheet.

T.Y. LIN / MOFFATT & NICHOL
TWO HARRISON STREET, SUITE 500
SAN FRANCISCO, CA 94105

W. KOO & ASSOCIATES, INC
625 THE CITY DRIVE SOUTH, SUITE 200
ORANGE, CA 92868

To get to the Caltrans web site, go to: http://www.dot.ca.gov

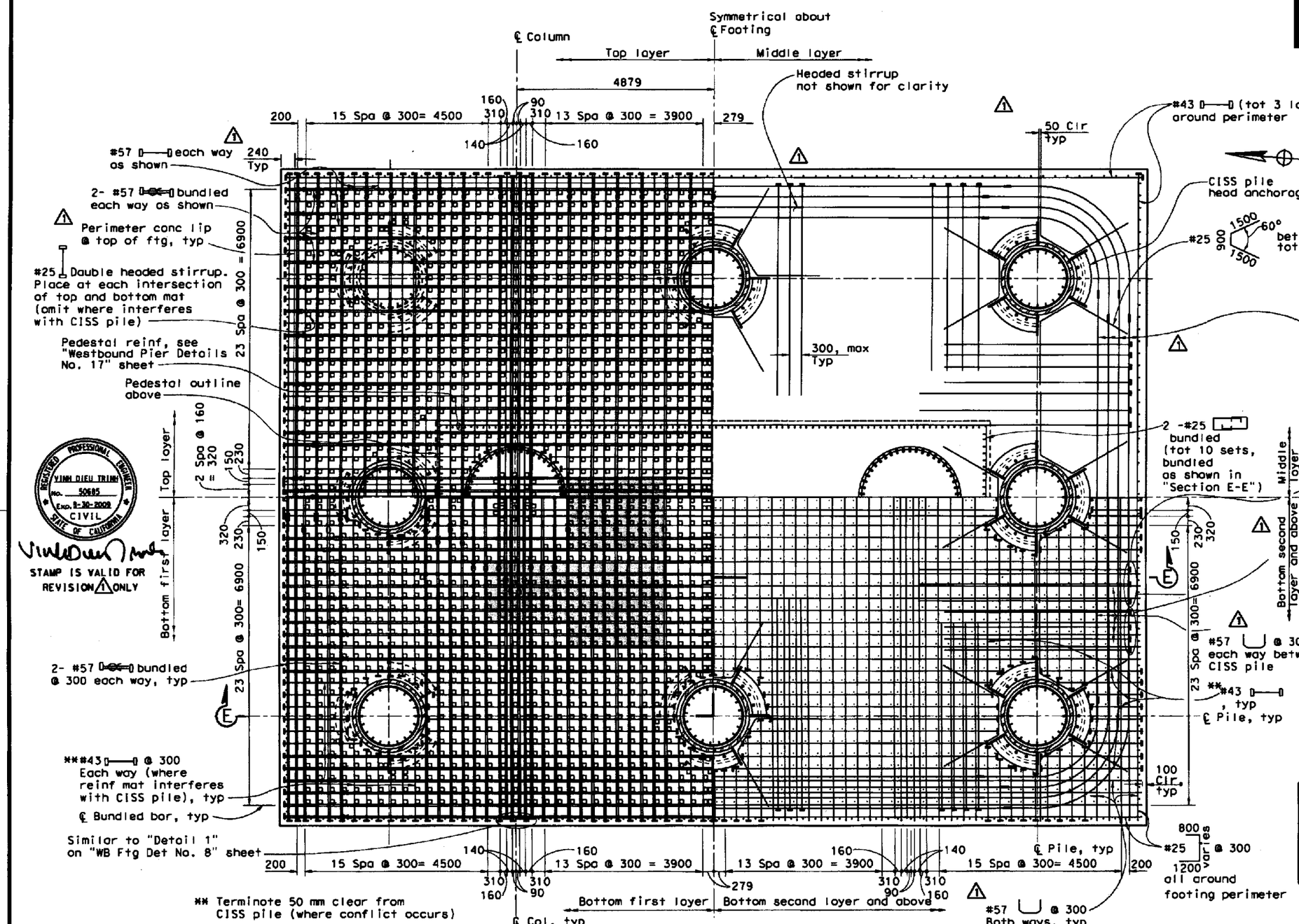

FOOTING PLAN - PIER E22L
1:50

Note:
The Contractor shall verify all controlling field dimensions before ordering or fabricating any material

ALL DIMENSIONS ARE IN MILLIMETERS UNLESS OTHERWISE SHOWN

5180 #57 headed bar in 12 layers (18 top & 18 bottom), typ tot 8 locations

4572 #57 headed bar in 8 layers (16 top & 16 bottom), typ tot 8 locations

LEGEND

- Denotes headed bar (both ends)
- Denotes bundled headed bar (alternate ends)
- Denotes bundled bars

NOTES:

1. For CISS pile and head anchorage details, see "WB Pile Details No. 2 & No. 3" sheets.
2. For "Section E-E" see "Westbound Footing Details No. 13" sheet.
3. Stirrups shall be spaced @ 300 max where possible. Move stirrups to clear the middle layer reinf. Min No. of stirrups shall not be less than those shown as "□" on plan.
4. Field cut pedestal reinf, if conflicts with pile.
5. All couplers shall be ultimate butt splices.

MARK	DATE	DESCRIPTIONS	BY	CH'D	CCO#
1	3/5/08	"U" BAR REVISION	AW	VT	
		REVISIONS			

CONTRACT CHANGE ORDER NO. 33
SHEET 11 OF 12 04-0120L4

REGISTERED PROFESSIONAL ENGINEER VINH DIEU TRINH No. 50605 Exp. 9-30-2009 CIVIL STATE OF CALIFORNIA
STAMP IS VALID FOR REVISION 1 ONLY

SAN FRANCISCO OAKLAND BAY BRIDGE
EAST SPAN SEISMIC SAFETY PROJECT

OAKLAND APPROACH STRUCTURES-PHASE 1

WESTBOUND FOOTING DETAILS NO. 12

DESIGN OVERSIGHT: SAM AKKAD, FRANCISCO CARPIO, BERNARD CHAN, HASAN EL-HATUR
8-10-06
SIGN OFF DATE

	BY	CHECKED
DESIGN	X. Wu	V. Trinh
DETAILS	A. Segura	V. Trinh
QUANTITIES	O. Jaradat	H. Haroun

PREPARED FOR THE STATE OF CALIFORNIA DEPARTMENT OF TRANSPORTATION

Adam Wang
PROJECT ENGINEER

BRIDGE NO. 34-0006L/R
KILOMETER POST 1.6

CU 04
EA 0120L1

DISREGARD PRINTS BEARING EARLIER REVISION DATES

REVISION DATES (PRELIMINARY STAGE ONLY) 10/20/03 1/20/04 10/27/04 1/13/05 6/24/05 11/21/05 1/31/06 4/21/06 7/26/06 3/5/08

SHEET 32 OF 224

Rev. Date: 5-18-98

ORIGINAL SCALE IN MILLIMETERS FOR REDUCED PLANS 0 10 20 30 40 50 60 70 80 90 100

FILE => ...\04-0120L1-34-006-f-footx12.dgn

USERNAME => BUSER DATE PLOTTED => 6/16/2008 TIME PLOTTED => 9:51:36 AM

MARK	DATE	DESCRIPTIONS	BY	CH'D	CCO#
1	3/5/08	"U" BAR REVISION	AW	VT	

REVISIONS

CONTRACT CHANGE ORDER NO. 33
SHEET 12 OF 12 04-012014

REGISTERED PROFESSIONAL ENGINEER VINH DIEU TRINH No. 50685 Exp. 9-30-2009 CIVIL STATE OF CALIFORNIA

STAMP IS VALID FOR REVISION 1 ONLY

Caltrans Metric

DIST	COUNTY	ROUTE	KILOMETER POST TOTAL PROJECT	SHEET NO.	TOTAL SHEETS
04	Ala	80	1.6/2.7	146R1	643

Adam Wang
REGISTERED ENGINEER / CIVIL

1-29-07
PLANS APPROVAL DATE

REGISTERED PROFESSIONAL ENGINEER ADAM TN WANG No. 40402 Exp. 3-31-2009 CIVIL STATE OF CALIFORNIA

The State of California or its officers or agents shall not be responsible for the accuracy or completeness of electronic copies of this plan sheet.

T.Y. LIN / MOFFATT & NICHOL
TWO HARRISON STREET, SUITE 500
SAN FRANCISCO, CA 94105

W. KOO & ASSOCIATES, INC
625 THE CITY DRIVE SOUTH, SUITE 200
ORANGE, CA 92868

To get to the Caltrans web site, go to: http://www.dot.ca.gov

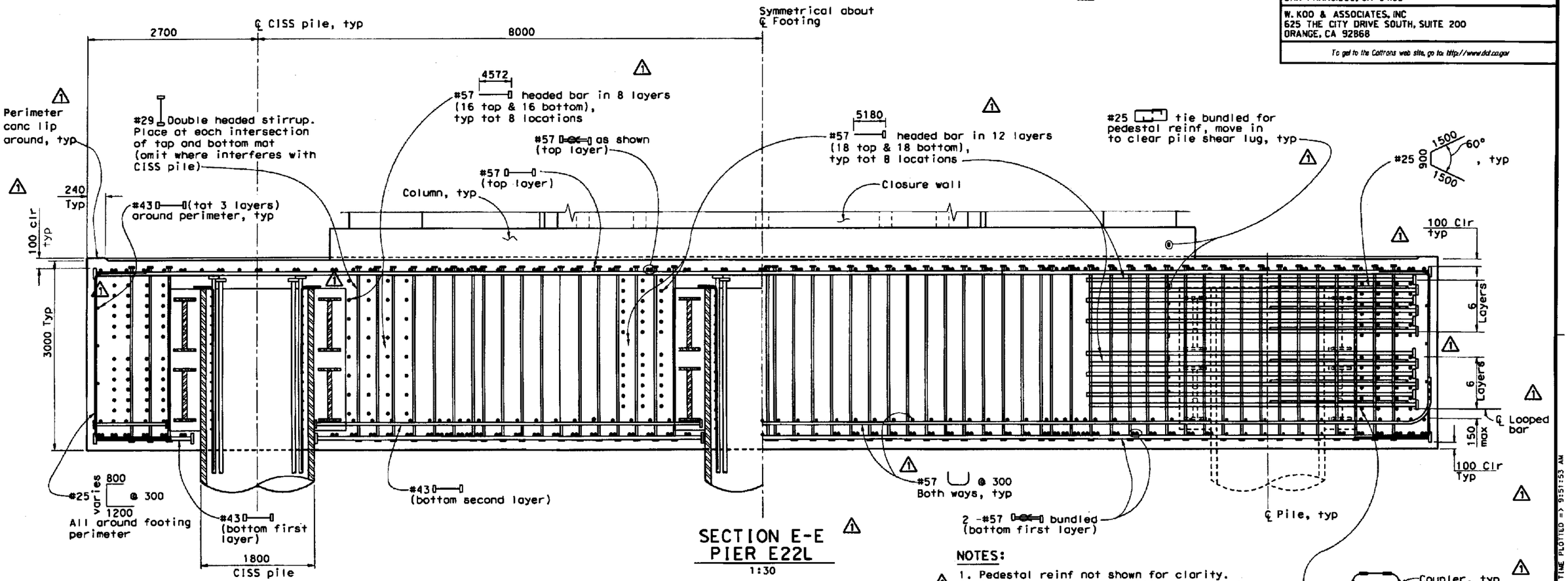

SECTION E-E
PIER E22L
1:30

NOTES:

1. Pedestal reinf not shown for clarity.
2. All couplers shall be ultimate butt splices.

LEGEND

- Denotes headed bar (both ends)
- Denotes bundled headed bar (alternate ends)
- Denotes bundled bars

Note:
The Contractor shall verify all controlling field dimensions before ordering or fabricating any material

ALL DIMENSIONS ARE IN MILLIMETERS UNLESS OTHERWISE SHOWN

DESIGN OVERSIGHT
SAM AKKAD FRANCISCO CARPIO BERNARD CHAN HASAN EL-NATUR
8-10-06
SIGN OFF DATE

	BY	CHECKED
DESIGN	X. Wu	V. Trinh
DETAILS	A. Segura	V. Trinh
QUANTITIES	O. Jaradat	H. Haroun

PREPARED FOR THE STATE OF CALIFORNIA DEPARTMENT OF TRANSPORTATION

Adam Wang
PROJECT ENGINEER

BRIDGE NO. 34-0006L/R
KILOMETER POST 1.6

SAN FRANCISCO OAKLAND BAY BRIDGE
EAST SPAN SEISMIC SAFETY PROJECT

OAKLAND APPROACH STRUCTURES-PHASE 1

WESTBOUND FOOTING DETAILS NO. 13

Rev. Date: 5-18-98

ORIGINAL SCALE IN MILLIMETERS FOR REDUCED PLANS 0 10 20 30 40 50 60 70 80 90 100

CU 04
EA 0120L1

DISREGARD PRINTS BEARING EARLIER REVISION DATES

REVISION DATES (PRELIMINARY STAGE ONLY) 10/20/03 8/30/04 10/22/04 2/18/05 5/20/05 11/21/05 1/31/06 4/17/06 7/20/06 1/5/07

SHEET 33 OF 224

FILE => ...\04-012011-34-006-f-footx13.dgn

USERNAME => RUSER DATE PLOTTED => 6/18/2008 TIME PLOTTED => 9:51:53 AM

STATE OF CALIFORNIA - DEPARTMENT OF TRANSPORTATION

CONTRACT CHANGE ORDER MEMORANDUM

TO: AMER BATA / BEN GHAFGHAZI	FILE: E.A. 04 - 0120L4
FROM: BEN GHAFGHAZI	CO-RTE-PM ALA-80-1.6/2.7
	FED. NO. NO FED AID
CCO#: 33 SUPPLEMENT#: 0 Category Code: CHSX	CONTINGENCY BALANCE (incl. this change) $15,006,372.10
COST: $1,144,585.10 INCREASE ☑ DECREASE ☐	HEADQUARTERS APPROVAL REQUIRED? ☑ YES ☐ NO
SUPPLEMENTAL FUNDS PROVIDED: $450,000.00	IS THIS REQUEST IN ACCORDANCE WITH ENVIRONMENTAL DOCUMENTS? ☑ YES ☐ NO
CCO DESCRIPTION: Revise footing details for Br.34-0006L	**PROJECT DESCRIPTION:** Construct bridge, roadway, building and electrical system.

Original Contract Time:	Time Adj. This Change:	Previously Approved CCO Time Adjustments:	Percentage Time Adjusted: (including this change)	Total # of Unreconciled Deferred Time CCO(s): (including this change)
810 Day(s)	DEF Day(s)	0 Day(s)	0 %	4

THIS CHANGE ORDER PROVIDES FOR:

Revision in rebar details at Piers E-17L through E-22L as shown on Sheets 3 of 12, through 12 of 12, of the CCO, due to constructability issues identified in accordance with Section 5-1.15, "Integrated Shop Drawings," of the Special Provisions.

After a review of the Integrated Shop Drawings for the Piers E-17L through E-22L, the designers determined that the number 57 U-Shaped bars could not be manufactured to tolerance required per the contract plans. These bars will be replaced with circumferential confining reinforcement bars as shown on the CCO drawings. This CCO is being generated by the State to incorporate the changes to the contract plans. Payment will be in accordance with Section 4-1.03, "Changes," of the Standard Specifications as specified in Addendum #4 to Section 5-1.15, "Integrated Shop Drawings," of the Special Provisions. This CCO will be paid as an adjustment of compensation at lump sum for an estimated cost of $1,062,646.70 and an increase in Item #130, Bar Reinforcing Steel (Epoxy Coated)(Bridge), of 34,414 kg for $81,938.40. Total cost of this CCO is $1,144,585.10. This CCO can be financed from supplemental funds of $450,000.00 and the contingency fund. A detailed cost analysis has been performed and is in the contract files.

This CCO addresses all of the footings for the westbound structure, Bridge No. 34-006L. Revised contract plans for the eastbound structure, Bridge No. 34-006R have been developed. The cost is still under negotiation, but it is anticipated to be in the same range as westbound. Once the cost is agreed on a supplemental CCO will be issued. It is anticipated that the cost of this CCO and the supplement will be approximately $2,200,000.00.

Adjustment of contract time is deferred pending completion of the work specified in this change as it may affect the controlling operation. Adjustment of contract time will be made in accordance with Section 8-1.07, "Liquidated Damages", of the Standard Specifications.

This change was discussed and concurred by Ade Akinsanya, Structures Design, Jal N. Birdy, Project Engineer for Moffatt & Nichol, Adam Wang, designer for PBS&J, Patrick Treacy, Headquarters Construction Coordinator, Mike Forner, Principal Construction Engineer, and Ken Terpstra, Project Manager. This CCO was approved by TBPOC on May 2, 2008. Issue and approve was granted by Headquarters on June 6, 2008.

Maintenance concurrence is not necessary since this CCO only changes reinforcement details and no new work is being added.

ADA Notice: For individuals with sensory disabilities, this document is available in alternate formats. For information call: (916) 654-6410 or TDD (916) 654-3880 or write Records and Forms Management, 1120 N Street, MS-89, Sacramento, CA 95814.

CONCURRED BY:			
Construction Engineer:	Ben Ghafghazi	Date	7/15/08
Bridge Engineer:	Mehran Ardakanian	Date	
Project Engineer:	Ade Akinsanya, Structures Design	Date	3/6/08
Project Manager:	Ken Terprstra	Date	4/2/08
FHWA Rep.:		Date	
Environmental:		Date	
Other (specify):	Jal Birdy, Moffat Nichol	Date	3/6/08
Other (specify):	Adam Wang, PBS&J	Date	3/6/08
District Prior Approval By:	Mike Forner, Principal TE	Date	4/2/08
HQ (Issue Approve) By:	Ken Darby	Date	6/6/08
Resident Engineer's Signature:		Date	7/15/08

ESTIMATE OF COST

	THIS REQUEST	TOTAL TO DATE
ITEMS	$81,938.40	($460,555.20)
FORCE ACCOUNT	$0.00	$0.00
AGREED PRICE	$0.00	$0.00
ADJUSTMENT	$1,062,646.70	$2,197,175.38
TOTAL	$1,144,585.10	$1,736,620.18

FEDERAL PARTICIPATION

☐ PARTICIPATING ☐ PARTICIPATING IN PART ☑ NONE
☐ NON-PARTICIPATING (MAINTENANCE) ☐ NON-PARTICIPATING

FEDERAL SEGREGATION (if more than one Funding Source or P.I.P. type)
☑ CCO FUNDED PER CONTRACT ☐ CCO FUNDED AS FOLLOWS

FEDERAL FUNDING SOURCE	PERCENT

ADA Notice: For individuals with sensory disabilities, this document is available in alternate formats. For information call: (916) 654-6410 or TDD (916) 654-3880 or write Records and Forms Management, 1120 N Street, MS-89, Sacramento, CA 95814.

STATE OF CALIFORNIA - DEPARTMENT OF TRANSPORTATION

CONTRACT CHANGE ORDER MEMORANDUM

TO: AMER BATA / BEN GHAFGHAZI	FILE: E.A. 04 - 0120L4
FROM: BEN GHAFGHAZI	CO-RTE-PM ALA-80-1.6/2.7
	FED. NO. NO FED AID
CCO#: 33 SUPPLEMENT#: 1 Category Code: CHSX	CONTINGENCY BALANCE (incl. this change) $14,286,428.70
COST: $592,035.08 INCREASE ☑ DECREASE ☐	HEADQUARTERS APPROVAL REQUIRED? ☑ YES ☐ NO
SUPPLEMENTAL FUNDS PROVIDED: $0.00	IS THIS REQUEST IN ACCORDANCE WITH ENVIRONMENTAL DOCUMENTS? ☑ YES ☐ NO
CCO DESCRIPTION: Revise footing details for Br.34-0006R.	**PROJECT DESCRIPTION:** Construct bridge, roadway, building and electrical system.

Original Contract Time:	Time Adj. This Change:	Previously Approved CCO Time Adjustments:	Percentage Time Adjusted: (including this change)	Total # of Unreconciled Deferred Time CCO(s): (including this change)
810 Day(s)	DEF Day(s)	0 Day(s)	0 %	5

THIS CHANGE ORDER PROVIDES FOR:

Revision in rebar details at Piers E-17R through E-22R as shown on Sheets 3 of 13 through 13 of 13 of this CCO, due to constructability issues identified in accordance with Section 5-1.15, "Integrated Shop Drawings," of the Special Provisions.

After a review of the Integrated Shop Drawings for the Piers E-17R through E-22R, the designers determined that the number 57 U-Shaped bars could not be manufactured to tolerance required per the contract plans. These bars will be replaced with circumferential confining reinforcement bars as shown on the CCO drawings. This CCO is being generated by the State to incorporate the changes to the contract plans. Payment will be in accordance with Section 4-1.03, "Changes," of the Standard Specifications as specified in Addendum #4 to Section 5-1.15, "Integrated Shop Drawings," of the Special Provisions. This CCO will be paid as an adjustment of compensation at lump sum of $1,129,725.52 and a decrease in Item #130, Bar Reinforcing Steel (Epoxy Coated)(Bridge), of 226,039 kg for a decrease $542,493.60. The Contractor is also being compensated for professional design services to produce new ISD's for the CCO plans. This work is to be paid as and adjustment of compensation at lump sum of $4,803.16. Total cost of this CCO is $592,035.08. This CCO can be financed from the contingency fund. A detailed cost analysis has been performed and is in the contract files.

This CCO addresses all of the footings for the eastbound structure, Bridge No. 34-0006R CCO #33 was previously issued for the westbound structure, Bridge No. 34-0006L The CCO for the eastbound structure was deferred until a price was agreed on with the Contractor. Total cost for CCO's #33 and #33-1 is $1,736,620.18.

Adjustment of contract time is deferred pending completion of the work specified in this change as it may affect the controlling operation. Adjustment of contract time will be made in accordance with Section 8-1.07, "Liquidated Damages", of the Standard Specifications.

This change was discussed and concurred by Ade Akinsanya, Structures Design, Jal N. Birdy, Project Engineer for Moffatt & Nichol, Adam Wang, designer for PBS&J, Patrick Treacy, Headquarters Construction Coordinator, Mike Forner, Principal Construction Engineer, and Ken Terpstra, Project Manager. This CCO was approved by TBPOC on May 2, 2008. Issue and approve was granted by Headquarters on June 6, 2008.

Maintenance concurrence is not necessary since this CCO only changes reinforcement details and no new work is being added.

ADA Notice: For individuals with sensory disabilities, this document is available in alternate formats. For information call: (916) 654-6410 or TDD (916) 654-3880 or write Records and Forms Management, 1120 N Street, MS-89, Sacramento, CA 95814.

CONCURRED BY:			
Construction Engineer:	Ben Ghafghazi	Date	8/18/08
Bridge Engineer:	Mehran Ardakanian	Date	8/18/08
Project Engineer:	Ade Akinsanya, Structures Design	Date	3/6/08
Project Manager:	Ken Terprstra	Date	4/2/08
FHWA Rep.:		Date	
Environmental:		Date	
Other (specify):	Jal Birdy, Moffat Nichol	Date	3/6/08
Other (specify):	Adam Wang, PBS&J	Date	3/6/08
District Prior Approval By:	Mike Forner, Principal TE	Date	4/2/08
HQ (Issue Approve) By:	Ken Darby	Date	6/6/08
Resident Engineer's Signature:		Date	8/18/08

ESTIMATE OF COST

	THIS REQUEST	TOTAL TO DATE
ITEMS	($542,493.60)	($460,555.20)
FORCE ACCOUNT	$0.00	$0.00
AGREED PRICE	$0.00	$0.00
ADJUSTMENT	$1,134,528.68	$2,197,175.38
TOTAL	$592,035.08	$1,736,620.18

FEDERAL PARTICIPATION

☐ PARTICIPATING ☐ PARTICIPATING IN PART ☑ NONE
☐ NON-PARTICIPATING (MAINTENANCE) ☐ NON-PARTICIPATING

FEDERAL SEGREGATION (if more than one Funding Source or P.I.P. type)
☑ CCO FUNDED PER CONTRACT ☐ CCO FUNDED AS FOLLOWS

FEDERAL FUNDING SOURCE	PERCENT

ADA Notice: For individuals with sensory disabilities, this document is available in alternate formats. For information call: (916) 654-6410 or TDD (916) 654-3880 or write Records and Forms Management, 1120 N Street, MS-89, Sacramento, CA 95814.

Date: 6/6/2008

Contract No.: 4 - 0120L4

Road: ALA-80-1.6/2.7

FED. NO.:

CCO No. 033 **Sup. No.** 1 **Rev. No.** 0 **CCO Category Code:** C - H - S - X

Continued:

Division of Construction
1120 "N" Street, MS-44, Sacramento, CA 95814
Fax Number: (916) 654-5735
To Confirm Transmission, Call (916) 654-5259

CONTRACT CHANGE ORDER

Change Requested by: Engineer

CCO 33	Suppl. No. 1	Contract No. 04 - 0120L4	Road ALA-80-1.6/2.7	FED. AID LOC.: NO FED AID

To: **M C M CONSTRUCTION INC**

You are directed to make the following changes from the plans and specifications or do the following described work not included in the plans and specifications for this contract. ***NOTE: This change order is not effective until approved by the Engineer.***

Description of work to be done, estimate of quantities and prices to be paid. (Segregate between additional work at contract price, agreed price and force account.) Unless otherwise stated, rates for rental of equipment cover only such time as equipment is actually used and no allowance will be made for idle time. This last percentage shown is the net accumulated increase or decrease from the original quantity in the Engineer's Estimate.

Revise footing details for Bridge No. 34-0006R.

Estimate of Decrease in Contract Item at Contract Price:

Item No. 130: BAR REINFORCING STEEL (EPOXY COATED)
-226039 KG (–4.20%) $2.40 /KG = –$542,493.60 (–3.57%)

Total cost for Decrease in Contract Item.....($542,493.60)

The quantity shown herein for Item #130, Bar Reinforcing Steel (Epoxy Coated)(Bridge), when combined with the quantities specified in the Engineer's Estimate, and as modified by any previous change orders, shall be the final quantity for which payment will be made.

Adjustment of Compensation at Lump Sum:

1) Revise rebar details at Piers E-17R through E-22R as shown on revised plan sheets 148R2, 149R2, 150R2, 151R2, 152R2, 153R2, 154R2, 155R2, 156R2, 157R2, 158R2, and 159R2 per Sheets 3 of 13 through 13 of 13 of this CCO. These sheets shall replace sheets 148, 149, 150, 151, 152, 153, 154, 155, 156, 157, 158, and 159 of 643 of the contract plans. Work involves replacing the #57 U-Shaped reinforcement bars with circumferential confining reinforcement bars around the perimeter of the footings. Make other adjustments to rebar as shown in the attached revised plan sheets.

Adjustment of Compensation at Agreed Lump Sum $1,129,725.52

2) Provide professional design services to produce ISD's for CCO plans in accordance with Section 5-1.15, "Integrated Shop Drawings," of the Special Provisions.

Adjustment of Compensation at Agreed Lump Sum $4,803.16

For the work above the Contractor will be paid the sum of $1,134,528.68. This sum constitutes full compensation, including markups, for this change.

Total Adjustment of Compensation at Agreed Lump Sum $1,134,528.68

Consideration of a time adjustment will be deferred until completion of the work specified herein. Determination of a commensurate time extension will be made in accordance with Section 10-1.14, "Progress Schedule (Critical Path Method)," of the Special Provisions and Section 8-1.07, "Liquidated Damages," of the Standard Specifications.

CONTRACT CHANGE ORDER

Change Requested by: Engineer

CCO 33	Suppl. No. 1	Contract No. 04 - 0120L4	Road ALA-80-1.6/2.7	FED. AID LOC.: NO FED AID

Estimated Cost: **Increase** ☑ **Decrease** ☐ **$592,035.08**

By reason of this order the time of completion will be adjusted as follows: Deferred

Submitted by

Signature	Resident Engineer BEN GHAFGHAZI	Date 6/23/08

Approval Recommended by

Signature Mike Forner	Principal TE Mike Forner	Date 6/25/08

Engineer Approval by

Signature Michael Forner	Principal TE Mike Forner	Date 8-18-08

We the undersigned contractor, have given careful consideration to the change proposed and agree, if this proposal is approved, that we will provide all equipment, furnish the materials, except as may otherwise be noted above, and perform all services necessary for the work above specified, and will accept as full payment therefor the prices shown above.

NOTE: If you, the contractor, do not sign acceptance of this order, your attention is directed to the requirements of the specifications as to proceeding with the ordered work and filing a written protest within the time therein specified.

Contractor Acceptance by

Signature	(Print name and title) Edmundo A. Pucki	Date 7/29/2008

DIST.	COUNTY	ROUTE	KILOMETER POST TOTAL PROJECT	SHEET NO.	TOTAL SHEETS
04	Ala	80	1.6/2.7	148R2	643

Caltrans Metric

REGISTERED ENGINEER - CIVIL

1-29-07
PLANS APPROVAL DATE

The State of California or its officers or agents shall not be responsible for the accuracy or completeness of electronic copies of this plan sheet.

REGISTERED PROFESSIONAL ENGINEER MOHAN S. CHAR No. C057894 Exp. 6/30/08 CIVIL STATE OF CALIFORNIA

T.Y. LIN / MOFFATT & NICHOL
TWO HARRISON STREET, SUITE 500
SAN FRANCISCO, CA 94105

LIM & NASCIMENTO ENGINEERING CORPORATION
12 MAUCHLY, BLDG L
IRVINE, CA 92618

To get to the Caltrans web site, go to: http://www.dot.ca.gov

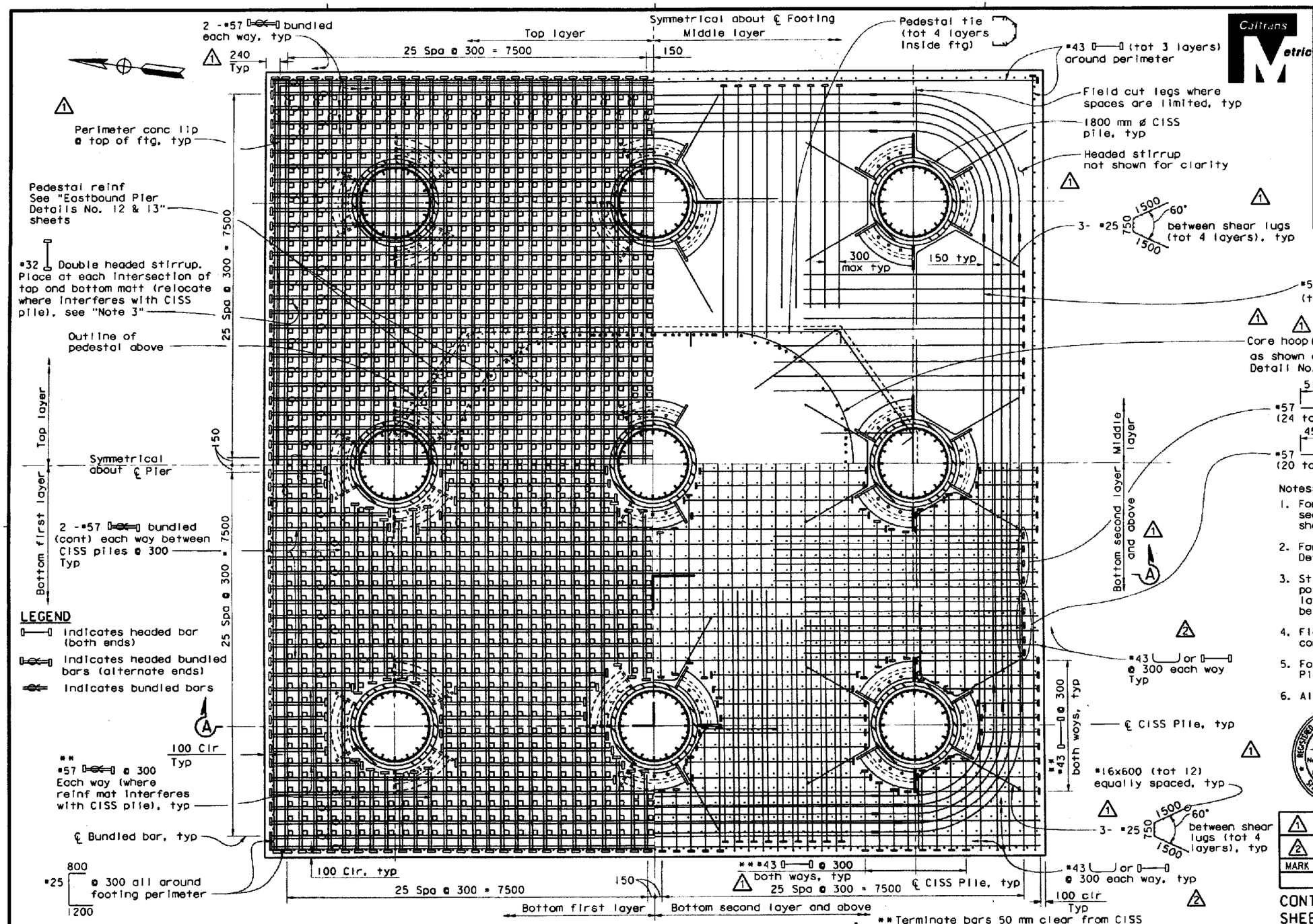

LEGEND

- indicates headed bar (both ends)
- indicates headed bundled bars (alternate ends)
- indicates bundled bars

** Terminate bars 50 mm clear from CISS piles (where conflict occurs)

ALL DIMENSIONS ARE IN MILLIMETERS UNLESS OTHERWISE SHOWN

Note: The Contractor shall verify all controlling field dimensions before ordering or fabricating any material.

FOOTING PLAN - PIER E17R

1:40

1. For CISS pile and head anchorage details, see "Eastbound Pile Details No. 1 & No. 2" sheets.
2. For "Section A-A" see "Eastbound Footing Details No. 3" sheet.
3. Stirrups shall be spaced @ 300 max where possible. Move stirrups to clear the middle layer reinf. Min No. of stirrups shall not be less than those shown as "a" on plan.
4. Field cut pedestal reinforcement if conflict occurs with pile.
5. For pedestal reinforcement, see "Eastbound Pier Details No. 13" sheet.
6. All couplers shall be service butt splices.

REGISTERED PROFESSIONAL ENGINEER MOHAN S. CHAR No. C057894 Exp. 6/30/10 CIVIL STATE OF CALIFORNIA

STAMP IS VALID FOR REVISION 1 & 2 ONLY

MARK	DATE	DESCRIPTIONS	BY	CH'D
1	4/22/08	"U" BAR REVISION	MSC	TWD
2	5/1/08	#43 HOOK OR HEAD OPTION	MSC	TWD
REVISION(S)				

CONTRACT CHANGE ORDER NO. 33-1
SHEET 3 OF 14 04-0120L4

SAN FRANCISCO OAKLAND BAY BRIDGE
EAST SPAN SEISMIC SAFETY PROJECT

OAKLAND APPROACH STRUCTURES - PHASE I

EASTBOUND FOOTING DETAILS NO. 2

DESIGN OVERSIGHT: SAM AKKAD, FRANCISCO CARPIO, BERNARD CHAN, NASAN EL-NATUR

SIGN OFF DATE

Rev. Date: 5-16-98

DESIGN	M. CHAR	T. DUDLEY
DETAILS	N. MORCILLO/M. ANDRASEK	M. CHAR
QUANTITIES	N. MORCILLO/Y. KIM	V. SIVAKOLUNDU/T. DUDLEY

PREPARED FOR THE STATE OF CALIFORNIA DEPARTMENT OF TRANSPORTATION

MOHAN S. CHAR, PROJECT ENGINEER

BRIDGE NO. 34-0006L/R
KILOMETER POST 1.6

CU 04
EA 0120L1

ORIGINAL SCALE IN MILLIMETERS FOR REDUCED PLANS 0 10 20 30 40 50 60 70 80 90 100

DISREGARD PRINTS BEARING EARLIER REVISION DATES 3/28/01 3/30/06 1/28/04 3/30/06 7/28/05 1/28/05 1/28/05 1/28/06 4/28/06 7/28/06

REVISION DATES (PRELIMINARY STAGE ONLY)

SHEET 35 OF 224

DIST.	COUNTY	ROUTE	KILOMETER POST TOTAL PROJECT	SHEET NO.	TOTAL SHEETS
04	Ala	80	1.6/2.7	149R2	643

REGISTERED ENGINEER - CIVIL

1-29-07
PLANS APPROVAL DATE

REGISTERED PROFESSIONAL ENGINEER MOHAN S. CHAR No. C057894 Exp. 6/30/08 CIVIL STATE OF CALIFORNIA

The State of California or its officers or agents shall not be responsible for the accuracy or completeness of electronic copies of this plan sheet.

T.Y. LIN / MOFFATT & NICHOL
TWO HARRISON STREET, SUITE 500
SAN FRANCISCO, CA 94105

LIM & NASCIMENTO ENGINEERING CORPORATION
12 MAUCHLY, BLDG L
IRVINE, CA 92618

To get to the Caltrans web site, go to: http://www.dot.ca.gov

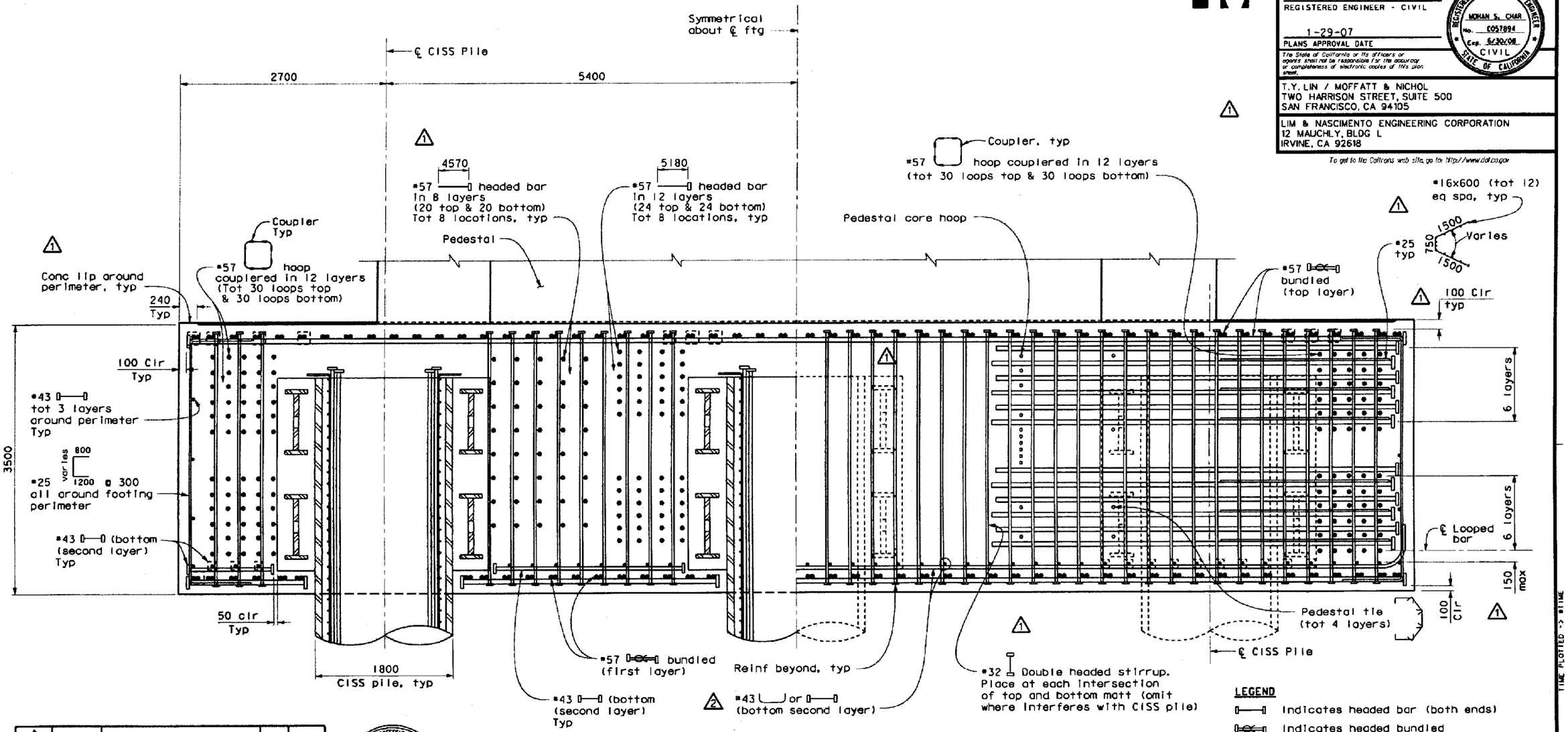

SECTION A-A
PIER E17R
1:25

LEGEND

- indicates headed bar (both ends)
- indicates headed bundled bars (alternate ends)
- indicates bundled bars

Notes:

1. Pedestal reinforcement not shown for clarity.
2. All couplers shall be service butt splices.

MARK	DATE	DESCRIPTIONS	BY	CH'D
1	4/22/08	"U" BAR REVISION	MSC	TWD
2	5/1/08	#43 HOOK OR HEAD OPTION	MSC	TWD
		REVISION(S)		

REGISTERED PROFESSIONAL ENGINEER MOHAN S. CHAR No. C057894 Exp. 6/30/10 CIVIL STATE OF CALIFORNIA

STAMP IS VALID FOR REVISION 1 & 2 ONLY

CONTRACT CHANGE ORDER NO. 33-1
SHEET 4 OF 14 04-012064

ALL DIMENSIONS ARE IN MILLIMETERS UNLESS OTHERWISE SHOWN

SAN FRANCISCO OAKLAND BAY BRIDGE
EAST SPAN SEISMIC SAFETY PROJECT

OAKLAND APPROACH STRUCTURES - PHASE I

EASTBOUND FOOTING DETAILS NO. 3

DESIGN OVERSIGHT: SAM AKKAD, FRANCISCO CARPIO, BERNARD CHAN, HASAN EL-NATUR
SIGN OFF DATE

	BY	CHECKED
DESIGN	M. CHAR	T. DUDLEY
DETAILS	N. MORCILLO/M. ANDRASEK	M. CHAR
QUANTITIES	N. MORCILLO/Y. KIM	V. SIYAKOLUNDU/T. DUDLEY

PREPARED FOR THE STATE OF CALIFORNIA DEPARTMENT OF TRANSPORTATION

MOHAN S. CHAR
PROJECT ENGINEER

BRIDGE NO. 34-0006L/R
KILOMETER POST 1.6

CU 04
EA 0120L1

DISREGARD PRINTS BEARING EARLIER REVISION DATES

SHEET 36 OF 224

Rev. Date: 5-18-98

ORIGINAL SCALE IN MILLIMETERS FOR REDUCED PLANS 0 10 20 30 40 50 60 70 80 90 100

TIME PLOTTED -> 8:11AM
DATE PLOTTED -> 8/12/08
-SCRNAME -> 8-CSER

DIST.	COUNTY	ROUTE	KILOMETER POST TOTAL PROJECT	SHEET NO.	TOTAL SHEETS
04	Ala	80	1.6/2.7	150R2	643

REGISTERED ENGINEER - CIVIL

1-29-07
PLANS APPROVAL DATE

The State of California or its officers or agents shall not be responsible for the accuracy or completeness of electronic copies of this plan sheet.

T.Y. LIN / MOFFATT & NICHOL
TWO HARRISON STREET, SUITE 500
SAN FRANCISCO, CA 94105

LIM & NASCIMENTO ENGINEERING CORPORATION
12 MAUCHLY, BLDG L
IRVINE, CA 92618

To get to the Caltrans web site, go to: http://www.dot.ca.gov

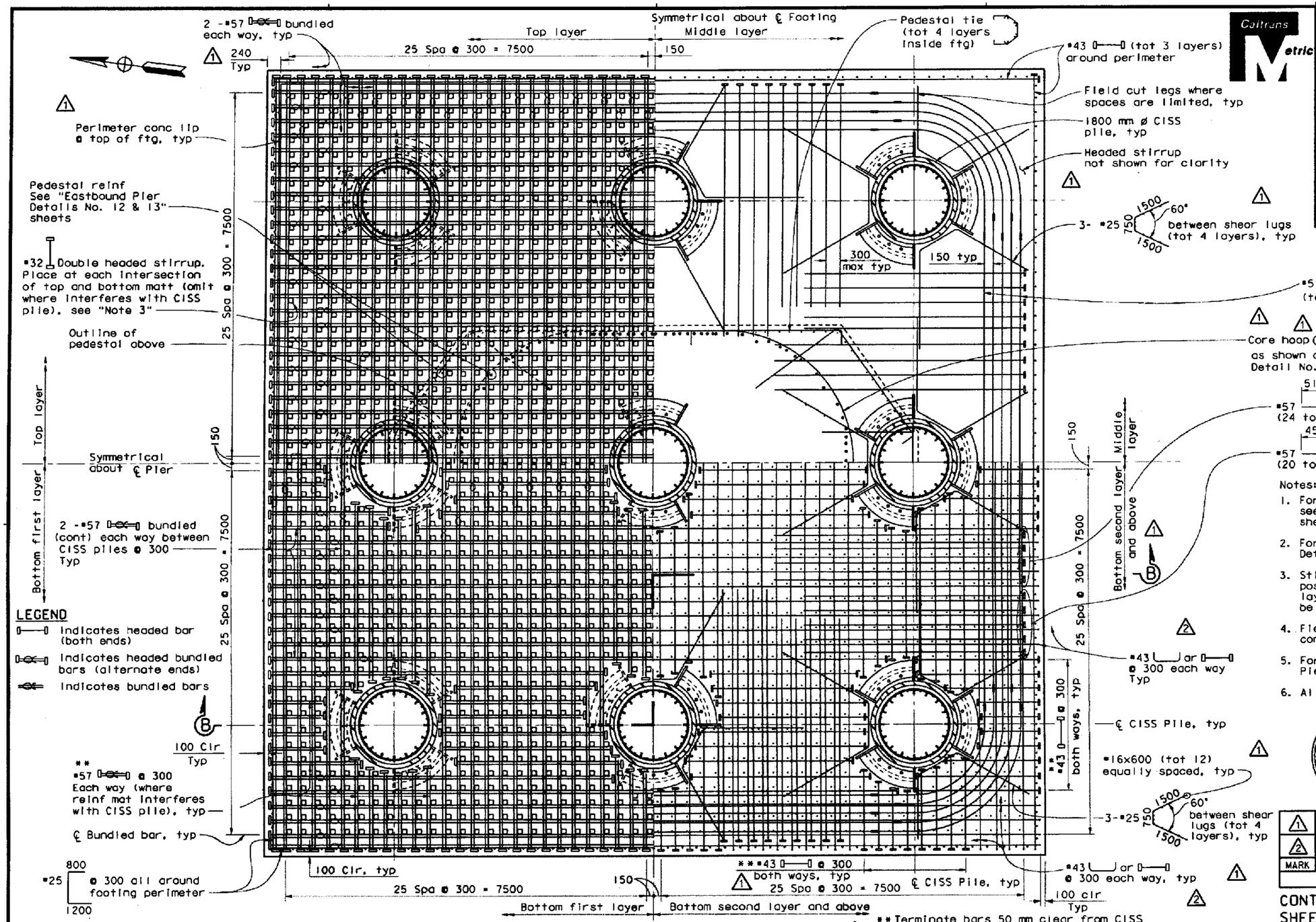

Note: The Contractor shall verify all controlling field dimensions before ordering or fabricating any material.

FOOTING PLAN - PIERS E18R

1:40

ALL DIMENSIONS ARE IN MILLIMETERS UNLESS OTHERWISE SHOWN

Notes:

1. For CISS pile and head anchorage details, see "Eastbound Pile Details No.1 & No.2" sheets.
2. For "Section B-B" see "Eastbound Footing Details No. 5" sheet.
3. Stirrups shall be spaced @ 300 max where possible. Move stirrups to clear the middle layer reinf. Min No. of stirrups shall not be less than those shown as "a" on plan.
4. Field cut pedestal reinforcement if conflict occurs with pile.
5. For pedestal reinforcement, see "Eastbound Pier Details No. 13" sheet.
6. All couplers shall be service butt splices.

STAMP IS VALID FOR REVISION 1 & 2 ONLY

MARK	DATE	DESCRIPTIONS	BY	CH'D
1	4/22/08	"U" BAR REVISION	MSC	TWD
2	5/1/08	#43 HOOK OR HEAD OPTION	MSC	TWD

REVISION(S)

CONTRACT CHANGE ORDER NO. 33-1
SHEET 5 OF 14 04-0120L4

SAN FRANCISCO OAKLAND BAY BRIDGE
EAST SPAN SEISMIC SAFETY PROJECT

OAKLAND APPROACH STRUCTURES - PHASE I

EASTBOUND FOOTING DETAILS NO. 4

DESIGN OVERSIGHT: SAM AKRAD, FRANCISCO CARPIO, BERNARD CHAN, HASAN EL-NATUR
SIGN OFF DATE

	BY	CHECKED
DESIGN	M. CHAR	T. DUDLEY
DETAILS	N. MORCILLO/M. ANDRASEK	M. CHAR
QUANTITIES	N. MORCILLO/Y. KIM	V. SIVAKOLUNDU/T. DUDLEY

PREPARED FOR THE STATE OF CALIFORNIA DEPARTMENT OF TRANSPORTATION

MOHAN S. CHAR
PROJECT ENGINEER

BRIDGE NO. 34-0006L/R
KILOMETER POST 1.6

CU 04
EA 0120L1

Rev. Date: 5-18-98

ORIGINAL SCALE IN MILLIMETERS FOR REDUCED PLANS 0 10 20 30 40 50 60 70 80 90 100

DISREGARD PRINTS BEARING EARLIER REVISION DATES

REVISION DATES (PROJ. MANAGER STAMP ONLY)

SHEET 37 OF 224

DIST.	COUNTY	ROUTE	KILOMETER POST TOTAL PROJECT	SHEET NO.	TOTAL SHEETS
04	Ala	80	1.6/2.7	151R2	643

REGISTERED ENGINEER - CIVIL

1-29-07
PLANS APPROVAL DATE

The State of California or its officers or agents shall not be responsible for the accuracy or completeness of electronic copies of this plan sheet.

MOHAN S. CHAR No. C057894 Exp. 6/30/08 CIVIL STATE OF CALIFORNIA

T.Y. LIN / MOFFATT & NICHOL
TWO HARRISON STREET, SUITE 500
SAN FRANCISCO, CA 94105

LIM & NASCIMENTO ENGINEERING CORPORATION
12 MAUCHLY, BLDG L
IRVINE, CA 92618

To get to the Caltrans web site, go to: http://www.dot.ca.gov

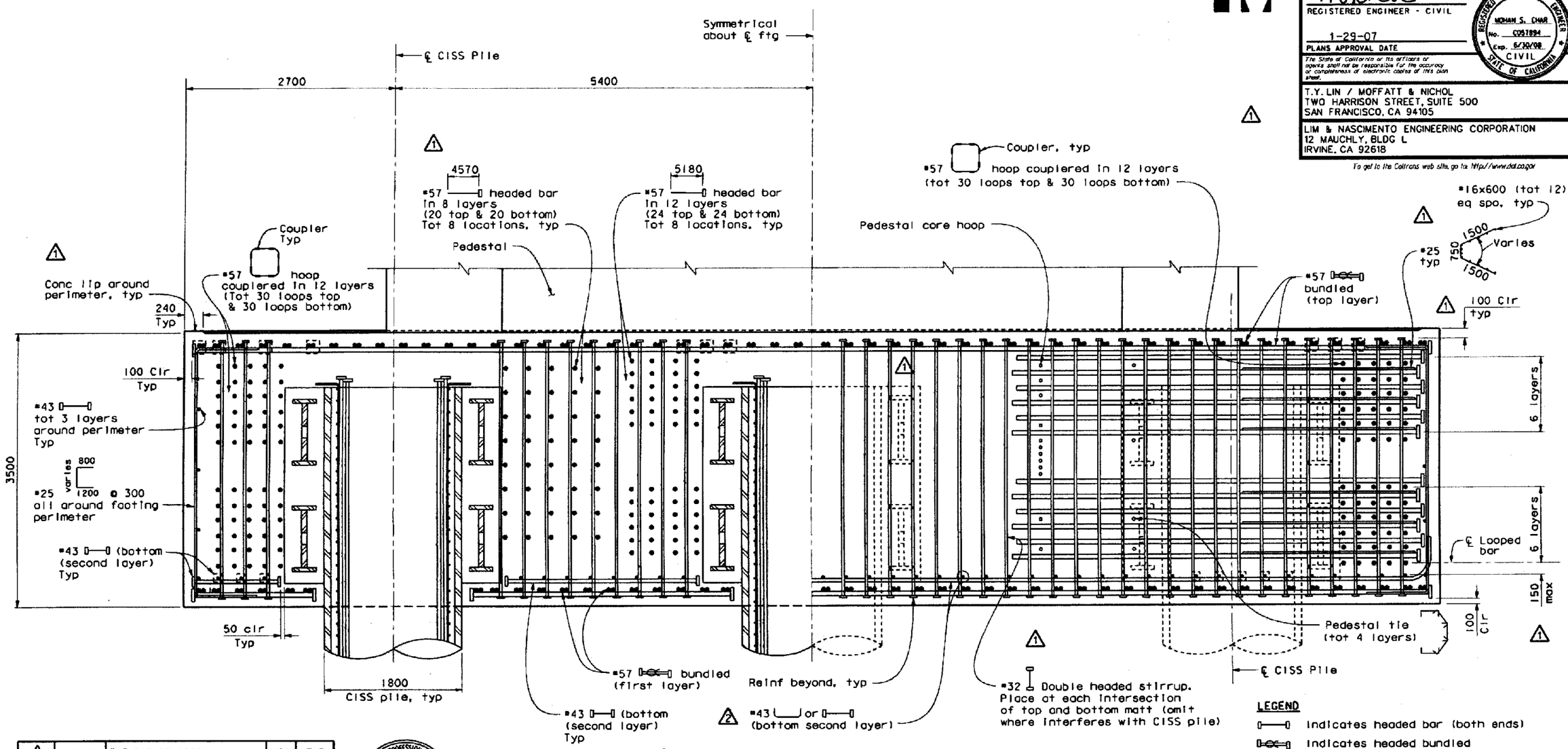

MARK	DATE	DESCRIPTIONS	BY	CH'D
1	4/22/08	"U" BAR REVISION	MSC	TWD
2	5/1/08	#43 HOOK OR HEAD OPTION	MSC	TWD

REVISION(S)

CONTRACT CHANGE ORDER NO. 33-1
SHEET 6 OF 14 04-0120L4

MOHAN S. CHAR No. C057894 Exp. 6/30/10 CIVIL STATE OF CALIFORNIA

STAMP IS VALID FOR REVISION 1 & 2 ONLY

SECTION B-B
PIER E18R
1:25

LEGEND

- indicates headed bar (both ends)
- indicates headed bundled bars (alternate ends)
- indicates bundled bars

Notes:

1. Pedestal reinforcement not shown for clarity.
2. All couplers shall be service butt splices.

ALL DIMENSIONS ARE IN MILLIMETERS UNLESS OTHERWISE SHOWN

DESIGN OVERSIGHT
SAM AKKAD FRANCISCO CARPIO BERNARD CHAN HASAN EL-MATUR
SIGN OFF DATE

	BY	CHECKED
DESIGN	M. CHAR	T. DUDLEY
DETAILS	N. MORCILLO/M. ANDRASER	M. CHAR
QUANTITIES	N. MORCILLO/Y. KIM	V. SIVAKOLUNDU/T. DUDLEY

PREPARED FOR THE STATE OF CALIFORNIA DEPARTMENT OF TRANSPORTATION

MOHAN S. CHAR
PROJECT ENGINEER

BRIDGE NO. 34-0006L/R
KILOMETER POST 1.6

SAN FRANCISCO OAKLAND BAY BRIDGE
EAST SPAN SEISMIC SAFETY PROJECT

OAKLAND APPROACH STRUCTURES - PHASE I

EASTBOUND FOOTING DETAILS NO. 5

Rev. Date: 5-18-98

ORIGINAL SCALE IN MILLIMETERS FOR REDUCED PLANS 0 10 20 30 40 50 60 70 80 90 100

CU 04
EA 0120L1

DISREGARD PRINTS BEARING EARLIER REVISION DATES

NEW SIGN DATES (PRELIMINARY STAGE ONLY)

SHEET 38 OF 224

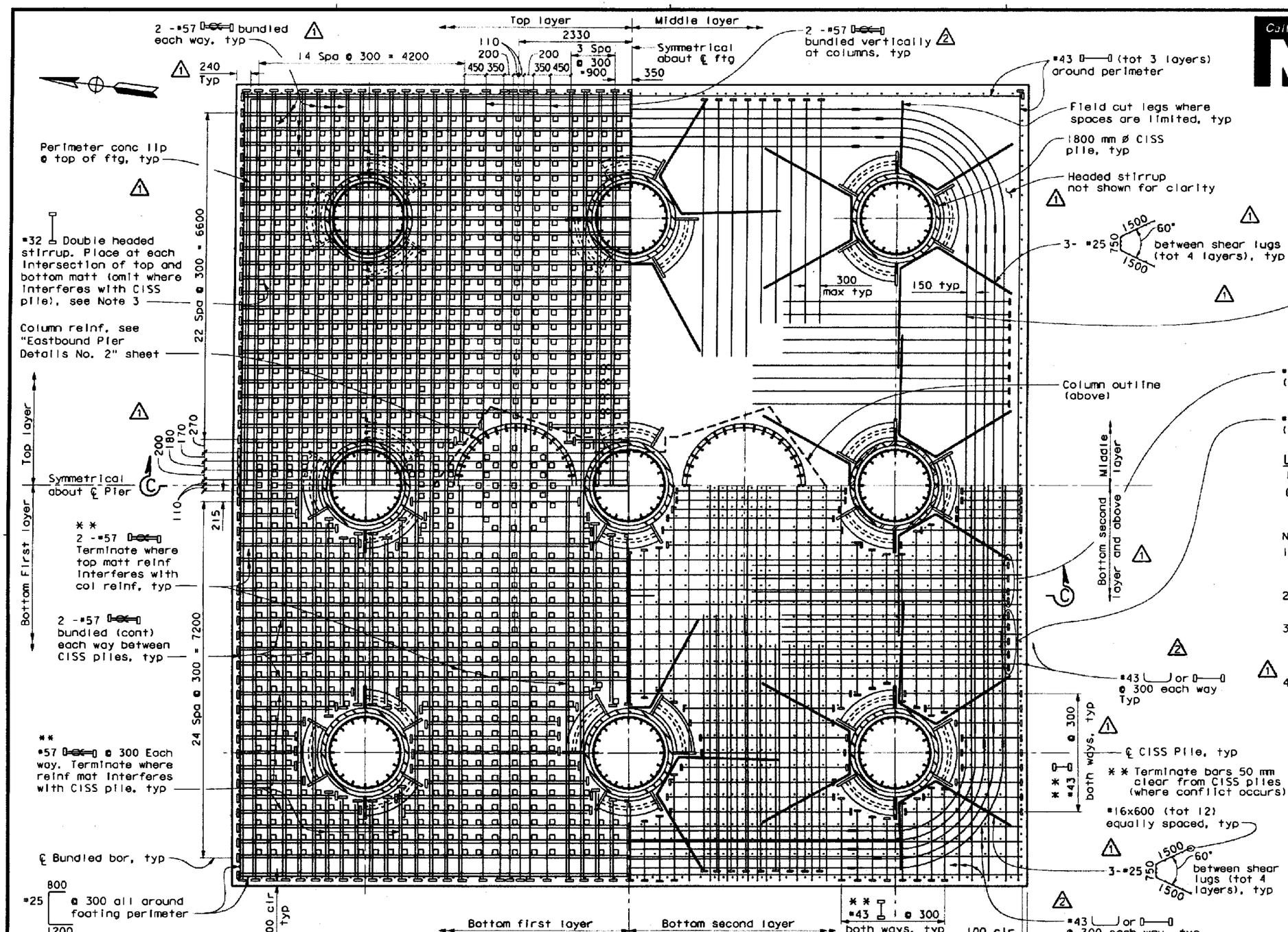

FOOTING PLAN - PIER E19R

1:40

Note: The Contractor shall verify all controlling field dimensions before ordering or fabricating any material.

ALL DIMENSIONS ARE IN MILLIMETERS UNLESS OTHERWISE SHOWN

LEGEND

- Indicates headed bar (both ends)
- Indicates headed bundled bars (alternate ends)
- Indicates bundled bars

Notes:

1. For CISS pile and head anchorage details, see "Eastbound Pile Details No. 1 & No. 2" sheets.
2. For "Section C-C" see "Eastbound Footing Details No. 7" sheet.
3. Stirrups shall be spaced @ 300 max where possible. Move stirrups to clear the middle layer reinf. Min No. of stirrups shall not be less than those shown as "a" on plan.
4. All couplers shall be service butt splices.

DIST.	COUNTY	ROUTE	KILOMETER POST TOTAL PROJECT	SHEET NO.	TOTAL SHEETS
04	Ala	80	1.6/2.7	152R2	643

REGISTERED ENGINEER - CIVIL

1-29-07

PLANS APPROVAL DATE

The State of California or its officers or agents shall not be responsible for the accuracy or completeness of electronic copies of this plan sheet.

REGISTERED PROFESSIONAL ENGINEER MOHAN S. CHAR No. C057894 Exp. 6/30/08 CIVIL STATE OF CALIFORNIA

T.Y. LIN / MOFFATT & NICHOL
TWO HARRISON STREET, SUITE 500
SAN FRANCISCO, CA 94105

LIM & NASCIMENTO ENGINEERING CORPORATION
12 MAUCHLY, BLDG L
IRVINE, CA 92618

To get to the Caltrans web site, go to: http://www.dot.ca.gov

STAMP IS VALID FOR REVISION 1 & 2 ONLY

MARK	DATE	DESCRIPTIONS	BY	CH'D
1	4/22/08	"U" BAR REVISION	MSC	TWD
2	5/1/08	#43 HOOK OR HEAD OPTION #57 VERTICAL BUNDLES	MSC	TWD

REVISION(S)

CONTRACT CHANGE ORDER NO. 33-1

SHEET 7 OF 14 04-0120L4

SAN FRANCISCO OAKLAND BAY BRIDGE
EAST SPAN SEISMIC SAFETY PROJECT

OAKLAND APPROACH STRUCTURES - PHASE I

EASTBOUND FOOTING DETAILS NO. 6

DESIGN OVERSIGHT: SAM AKRAD, FRANCISCO CARRIO, BERNARD CHAN, HASAN EL-NATUR

SIGN OFF DATE

	BY	CHECKED
DESIGN	M. CHAR	T. DUDLEY
DETAILS	N. MORCILLO/M. ANDRASEK	M. CHAR
QUANTITIES	N. MORCILLO/Y. KIM	V. SIVAKOLUNDU/T. DUDLEY

PREPARED FOR THE STATE OF CALIFORNIA DEPARTMENT OF TRANSPORTATION

MOHAN S. CHAR, PROJECT ENGINEER

BRIDGE NO. 34-0006L/R

KILOMETER POST 1.6

CU 04
EA 0120L1

DISREGARD PRINTS BEARING EARLIER REVISION DATES

SHEET 39 OF 224

Rev. Date: 3-18-98

ORIGINAL SCALE IN MILLIMETERS FOR REDUCED PLANS 0 10 20 30 40 50 60 70 80 90 100

FILE PLOTTER => $FILE

DATE PLOTTED => $DATE

FILENAME => $LSCFG

DIST.	COUNTY	ROUTE	KILOMETER POST TOTAL PROJECT	SHEET NO.	TOTAL SHEETS
04	Ala	80	1.6/2.7	153R2	643

REGISTERED ENGINEER - CIVIL

1-29-07
PLANS APPROVAL DATE

The State of California or its officers or agents shall not be responsible for the accuracy or completeness of electronic copies of this plan sheet.

REGISTERED PROFESSIONAL ENGINEER MOHAN S. CHAR No. C057894 Exp. 6/30/08 CIVIL STATE OF CALIFORNIA

T.Y. LIN / MOFFATT & NICHOL
TWO HARRISON STREET, SUITE 500
SAN FRANCISCO, CA 94105

LIM & NASCIMENTO ENGINEERING CORPORATION
12 MAUCHLY, BLDG L
IRVINE, CA 92618

To get to the Caltrans web site, go to: http://www.dot.ca.gov

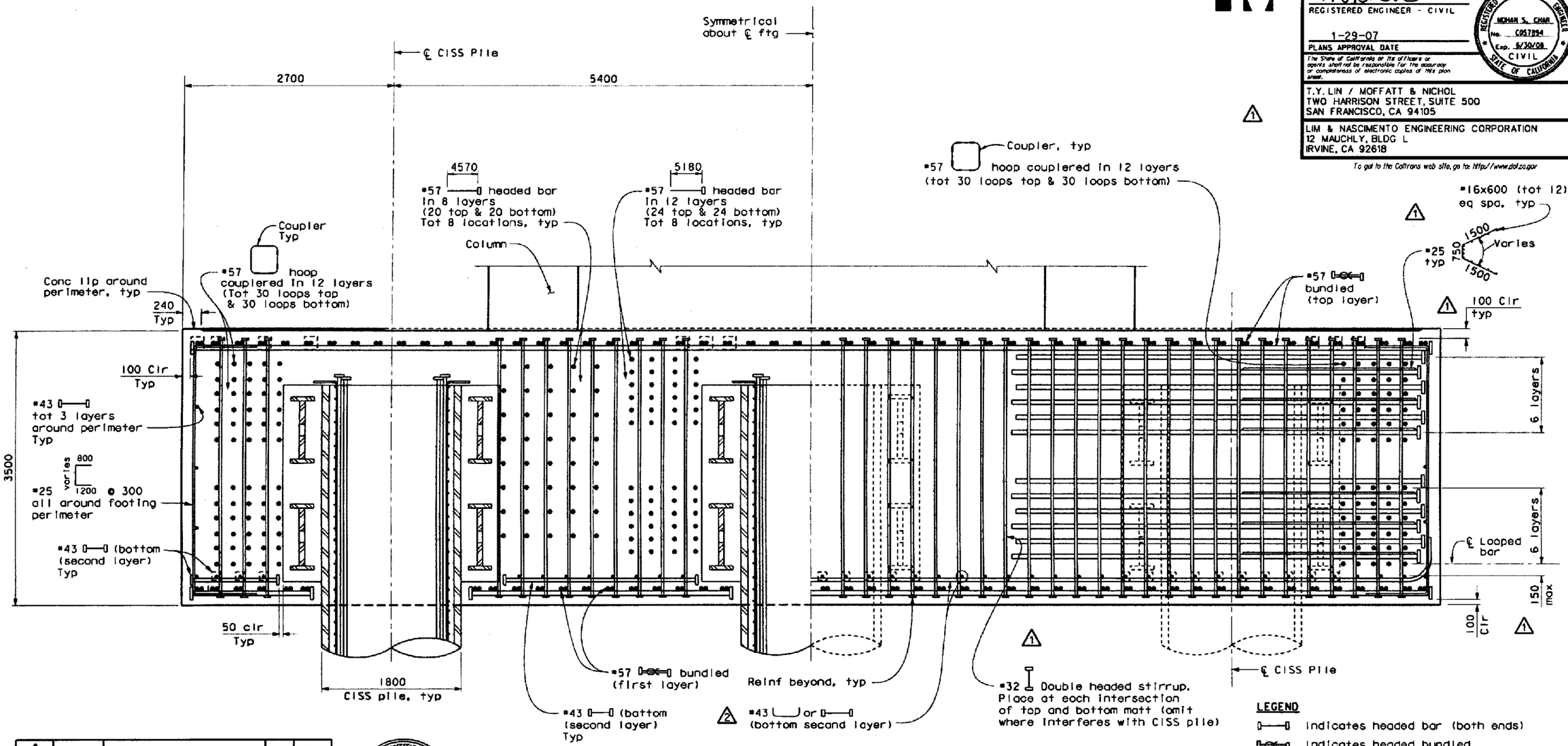

LEGEND

- indicates headed bar (both ends)
- indicates headed bundled bars (alternate ends)
- indicates bundled bars

MARK	DATE	DESCRIPTIONS	BY	CH'D
1	4/22/08	"U" BAR REVISION	MSC	TWD
2	5/1/08	#43 HOOK OR HEAD OPTION	MSC	TWD

REVISION(S)

CONTRACT CHANGE ORDER NO. 33-1
SHEET 8 OF 14 04-0120L4

REGISTERED PROFESSIONAL ENGINEER MOHAN S. CHAR No. C057894 Exp. 6/30/10 CIVIL STATE OF CALIFORNIA

STAMP IS VALID FOR REVISION 1 & 2 ONLY

SECTION C-C
PIER E19R
1:25

Notes:

1. Column reinforcement not shown for clarity.
2. All couplers shall be service butt splices.

ALL DIMENSIONS ARE IN MILLIMETERS UNLESS OTHERWISE SHOWN

SAN FRANCISCO OAKLAND BAY BRIDGE
EAST SPAN SEISMIC SAFETY PROJECT

DESIGN OVERSIGHT
SAM AKRAD FRANCISCO CARPIO BERNARD CHAN HASAN EL-NATUR
SIGN OFF DATE

	BY	CHECKED
DESIGN	M. CHAR	T. DUDLEY
DETAILS	N. MORCILLO/M. ANDRASEK	M. CHAR
QUANTITIES	N. MORCILLO/T. KIM	V. SIVAKOLUNDU/T. DUDLEY

PREPARED FOR THE STATE OF CALIFORNIA DEPARTMENT OF TRANSPORTATION

MOHAN S. CHAR
PROJECT ENGINEER

BRIDGE NO. 34-0006L/R
KILOMETER POST 1.6

OAKLAND APPROACH STRUCTURES - PHASE I
EASTBOUND FOOTING DETAILS NO. 7

CU 04
EA 0120L1

Rev. Date: 3-18-98

ORIGINAL SCALE IN MILLIMETERS FOR REDUCED PLANS 0 10 20 30 40 50 60 70 80 90 100

DISREGARD PRINTS BEARING EARLIER REVISION DATES

REVISION DATES (PRELIMINARY STAGE ONLY) 1/29/07 2/14/07 2/28/07 3/28/07 4/27/07 5/25/07 6/29/07 7/27/07 8/24/07 9/28/07 10/26/07

SHEET 40 OF 224

TIME PLOTTED: 11:45AM
DATE PLOTTED: 11-NOV-2008
FILENAME: 11-NOV-2008

DIST.	COUNTY	ROUTE	KILOMETER POST TOTAL PROJECT	SHEET NO.	TOTAL SHEETS
04	Ala	80	1.6/2.7	154R2	643

REGISTERED ENGINEER - CIVIL

1-29-07
PLANS APPROVAL DATE

The State of California or its officers or agents shall not be responsible for the accuracy or completeness of electronic copies of this plan sheet.

REGISTERED PROFESSIONAL ENGINEER MOHAN S. CHAR No. C057894 Exp. 6/30/08 CIVIL STATE OF CALIFORNIA

T.Y. LIN / MOFFATT & NICHOL
TWO HARRISON STREET, SUITE 500
SAN FRANCISCO, CA 94105

LIM & NASCIMENTO ENGINEERING CORPORATION
12 MAUCHLY, BLDG L
IRVINE, CA 92618

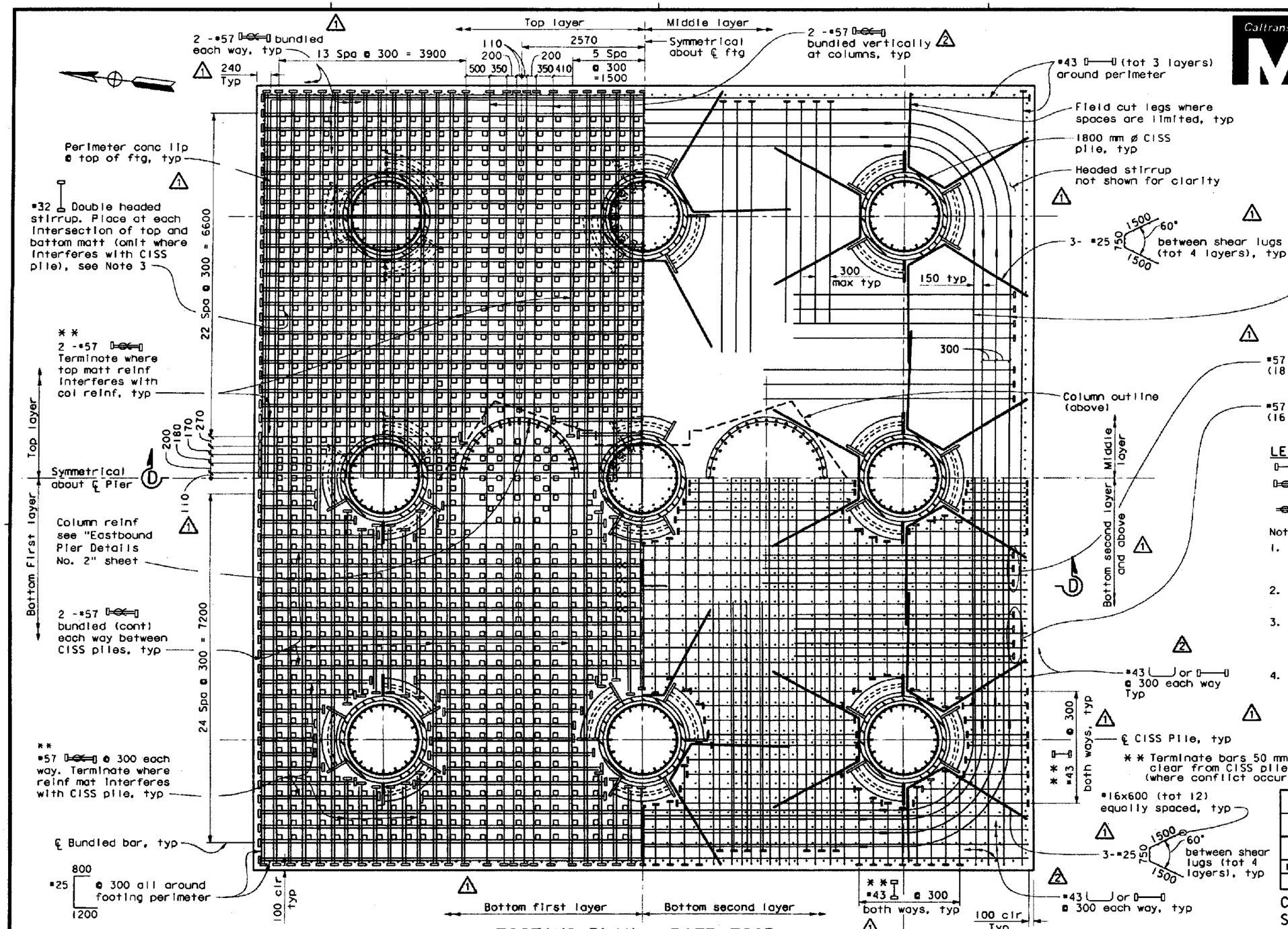

LEGEND

- Indicates headed bar (both ends)
- Indicates headed bundled bars (alternate ends)
- Indicates bundled bars

Notes:

1. For CISS pile and head anchorage details, see "Eastbound Pile Details No. 1 & No. 2" sheets.
2. For "Section D-D" see "Eastbound Footing Details No. 9" sheet.
3. Stirrups shall be spaced @ 300 max where possible. Move stirrups to clear the middle layer reinf. Min No. of stirrups shall not be less than those shown as "a" on plan.
4. All couplers shall be service butt splices.

REGISTERED PROFESSIONAL ENGINEER MOHAN S. CHAR No. C057894 Exp. 6/30/10 CIVIL STATE OF CALIFORNIA

STAMP IS VALID FOR REVISION 1 & 2 ONLY

MARK	DATE	DESCRIPTIONS	BY	CH'D
1	4/22/08	"U" BAR REVISION	MSC	TWD
2	5/1/08	#43 HOOK OR HEAD OPTION #57 VERTICAL BUNDLES	MSC	TWD

REVISION(S)

CONTRACT CHANGE ORDER NO. 334
SHEET 9 OF 14 04-0120L4

FOOTING PLAN - PIER E20R

1:40

Note: The Contractor shall verify all controlling field dimensions before ordering or fabricating any material.

ALL DIMENSIONS ARE IN MILLIMETERS UNLESS OTHERWISE SHOWN

DESIGN OVERSIGHT
SAM AKKAD FRANCISCO CARPIO BERNARD CHAN HASAN EL-MATUR
SIGN OFF DATE

	BY	CHECKED
DESIGN	M. CHAR	T. DUDLEY
DETAILS	N. MORCILLO/M. ANDRASEK	M. CHAR
QUANTITIES	N. MORCILLO/Y. KIM	V. SIVAKOLUNDU/T. DUDLEY

PREPARED FOR THE STATE OF CALIFORNIA DEPARTMENT OF TRANSPORTATION

MOHAN S. CHAR
PROJECT ENGINEER

BRIDGE NO. 34-0006L/R
KILOMETER POST 1.6

SAN FRANCISCO OAKLAND BAY BRIDGE
EAST SPAN SEISMIC SAFETY PROJECT

OAKLAND APPROACH STRUCTURES - PHASE I

EASTBOUND FOOTING DETAILS NO. 8

Rev. Date: 5-18-98

ORIGINAL SCALE IN MILLIMETERS FOR REDUCED PLANS 0 10 20 30 40 50 60 70 80 90 100

CU 04
EA 0120L1

DISREGARD PRINTS BEARING EARLIER REVISION DATES

REVISION DATES (PRELIMINARY STAGE ONLY)

SHEET 41 OF 224

DIST.	COUNTY	ROUTE	KILOMETER POST TOTAL PROJECT	SHEET NO.	TOTAL SHEETS
04	Ala	80	1.6/2.7	155R2	643

REGISTERED ENGINEER - CIVIL

1-29-07

PLANS APPROVAL DATE

REGISTERED PROFESSIONAL ENGINEER — MOHAN S. CHAR, No. C057894, Exp. 6/30/08, CIVIL, STATE OF CALIFORNIA

The State of California or its officers or agents shall not be responsible for the accuracy or completeness of electronic copies of this plan sheet.

T.Y. LIN / MOFFATT & NICHOL
TWO HARRISON STREET, SUITE 500
SAN FRANCISCO, CA 94105

LIM & NASCIMENTO ENGINEERING CORPORATION
12 MAUCHLY, BLDG L
IRVINE, CA 92618

To get to the Caltrans web site, go to: http://www.dot.ca.gov

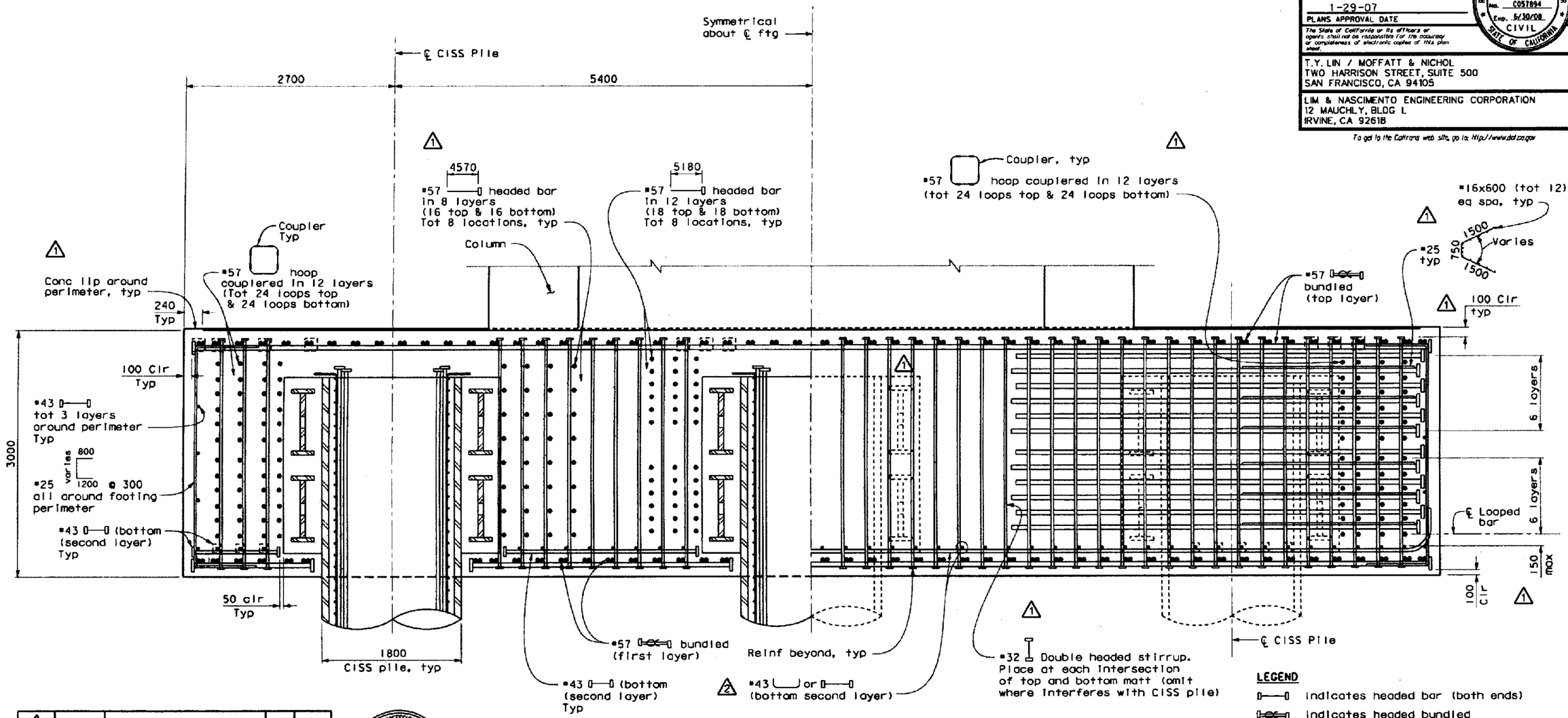

LEGEND

- indicates headed bar (both ends)
- indicates headed bundled bars (alternate ends)
- indicates bundled bars

MARK	DATE	DESCRIPTIONS	BY	CH'D
1	4/22/08	"U" BAR REVISION	MSC	TWD
2	5/1/08	#43 HOOK OR HEAD OPTION	MSC	TWD
		REVISION(S)		

REGISTERED PROFESSIONAL ENGINEER — MOHAN S. CHAR, No. C057894, Exp. 6/30/10, CIVIL, STATE OF CALIFORNIA

STAMP IS VALID FOR REVISION 1 & 2 ONLY

SECTION D-D
PIER E20R
1:25

Notes:

1. Column reinforcement not shown for clarity.
2. All couplers shall be service butt splices.

CONTRACT CHANGE ORDER NO. 33-1
SHEET 10 OF 14

ALL DIMENSIONS ARE IN MILLIMETERS UNLESS OTHERWISE SHOWN

SAN FRANCISCO OAKLAND BAY BRIDGE
EAST SPAN SEISMIC SAFETY PROJECT

OAKLAND APPROACH STRUCTURES - PHASE I
EASTBOUND FOOTING DETAILS NO. 9

DESIGN OVERSIGHT: SAM AKKAD, FRANCISCO CARPIO, BERNARD CHAN, HASAN EL-NATUR

SIGN OFF DATE

Rev. Date: 5-18-98

	BY	CHECKED
DESIGN	M. CHAR	T. DUDLEY
DETAILS	N. MORCILLO/M. ANDRASEK	M. CHAR
QUANTITIES	N. MORCILLO/Y. KIM	V. SIVAKOLUNDU/T. DUDLEY

ORIGINAL SCALE IN MILLIMETERS FOR REDUCED PLANS 0 10 20 30 40 50 60 70 80 90 100

PREPARED FOR THE STATE OF CALIFORNIA DEPARTMENT OF TRANSPORTATION

MOHAN S. CHAR, PROJECT ENGINEER

BRIDGE NO. 34-0006L/R
KILOMETER POST 1.6

CU 04
EA 0120L1

DISREGARD PRINTS BEARING EARLIER REVISION DATES

REVISION DATES (PRELIMINARY STAGE ONLY)

SHEET 42 OF 224

DIST.	COUNTY	ROUTE	KILOMETER POST TOTAL PROJECT	SHEET NO.	TOTAL SHEETS
04	Ala	80	1.6/2.7	156R2	643

REGISTERED ENGINEER - CIVIL

1-29-07
PLANS APPROVAL DATE

The State of California or its officers or agents shall not be responsible for the accuracy or completeness of electronic copies of this plan sheet.

REGISTERED PROFESSIONAL ENGINEER MOHAN S. CHAR No. C057894 Exp. 6/30/09 CIVIL STATE OF CALIFORNIA

T.Y. LIN / MOFFATT & NICHOL
TWO HARRISON STREET, SUITE 500
SAN FRANCISCO, CA 94105

LIM & NASCIMENTO ENGINEERING CORPORATION
12 MAUCHLY, BLDG L
IRVINE, CA 92618

STAMP IS VALID FOR REVISION 1 & 2 ONLY

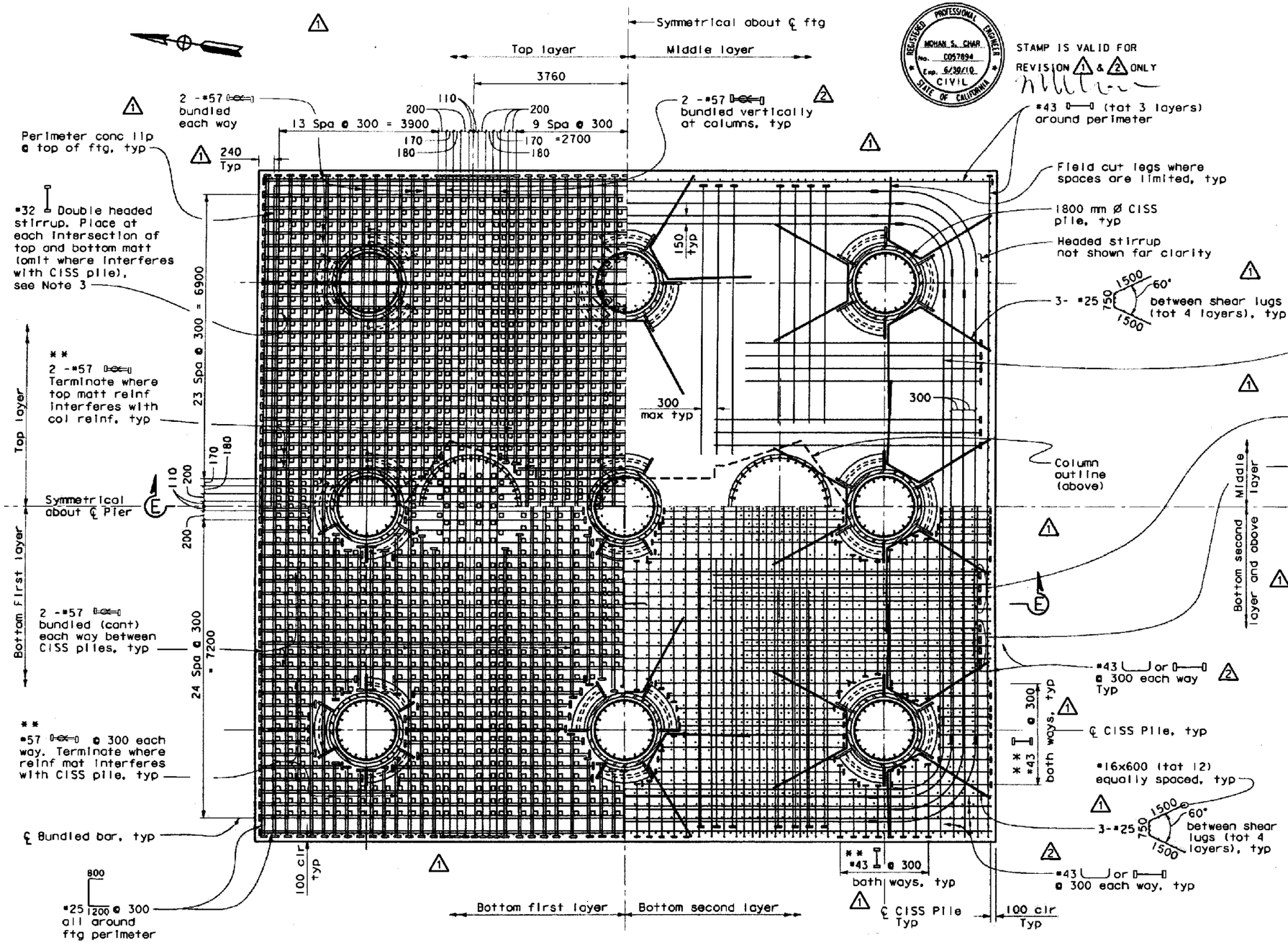

FOOTING PLAN - PIER E21R

1:50

** Terminate bars 50 mm clear from CISS piles (where conflict occurs)

LEGEND

- Indicates headed bar (both ends)
- Indicates headed bundled bars (alternate ends)
- Indicates bundled bars

Notes:

1. For CISS pile and head ancharage details, see "Eastbound Pile Details No. 1 & No. 2" sheets.
2. For "Section E-E" see "Eastbound Footing Details No. 11" sheet.
3. Stirrups shall be spaced @ 300 max where possible. Move stirrups to clear the middle layer reinf. Min No. of stirrups shall not be less than those shown as "a" on plan.
4. All couplers shall be service butt splices.

MARK	DATE	DESCRIPTIONS	BY	CH'D
1	4/22/08	"U" BAR REVISION	MSC	TWD
2	5/1/08	#43 HOOK OR HEAD OPTION #57 VERTICAL BUNDLES	MSC	TWD

REVISION(S)

CONTRACT CHANGE ORDER NO. 33-1
SHEET 11 OF 14 04-0120L4

Note: The Contractor shall verify all controlling field dimensions before ordering or fabricating any material.

ALL DIMENSIONS ARE IN MILLIMETERS UNLESS OTHERWISE SHOWN

SAN FRANCISCO OAKLAND BAY BRIDGE
EAST SPAN SEISMIC SAFETY PROJECT

OAKLAND APPROACH STRUCTURES - PHASE I

EASTBOUND FOOTING DETAILS NO. 10

DESIGN OVERSIGHT: SAM AKKAD, FRANCISCO CARPIO, BERNARD CHAN, HASAN EL-NATUR
SIGN OFF DATE

	BY	CHECKED
DESIGN	M. CHAR	T. DUDLEY
DETAILS	N. MORCILLO/M. ANDRASEK	M. CHAR
QUANTITIES	N. MORCILLO/Y. KIM	V. SIVAKOLUNDU/T. DUDLEY

Rev. Date: 5-18-98

ORIGINAL SCALE IN MILLIMETERS FOR REDUCED PLANS 0 10 20 30 40 50 60 70 80 90 100

PREPARED FOR THE STATE OF CALIFORNIA DEPARTMENT OF TRANSPORTATION

MOHAN S. CHAR
PROJECT ENGINEER

BRIDGE NO. 34-0006L/R
KILOMETER POST 1.6

CU 04
EA 0120L1

DISREGARD PRINTS BEARING EARLIER REVISION DATES

REVISION DATES (PRELIMINARY STAGE ONLY) 11/27/06 12/27/06 1/26/06 2/27/06 3/27/06 4/27/06 5/27/06 6/27/06 7/27/06 8/27/06 7/28/06

SHEET 43 OF 224

DIST.	COUNTY	ROUTE	KILOMETER POST TOTAL PROJECT	SHEET NO.	TOTAL SHEETS
04	Ala	80	1.6/2.7	157R2	643

REGISTERED ENGINEER - CIVIL

1-29-07
PLANS APPROVAL DATE

REGISTERED PROFESSIONAL ENGINEER MOHAN S. CHAR No. C057894 Exp. 6/30/08 CIVIL STATE OF CALIFORNIA

The State of California or its officers or agents shall not be responsible for the accuracy or completeness of electronic copies of this plan sheet.

T.Y. LIN / MOFFATT & NICHOL
TWO HARRISON STREET, SUITE 500
SAN FRANCISCO, CA 94105

LIM & NASCIMENTO ENGINEERING CORPORATION
12 MAUCHLY, BLDG L
IRVINE, CA 92618

To get to the Caltrans web site, go to: http://www.dot.ca.gov

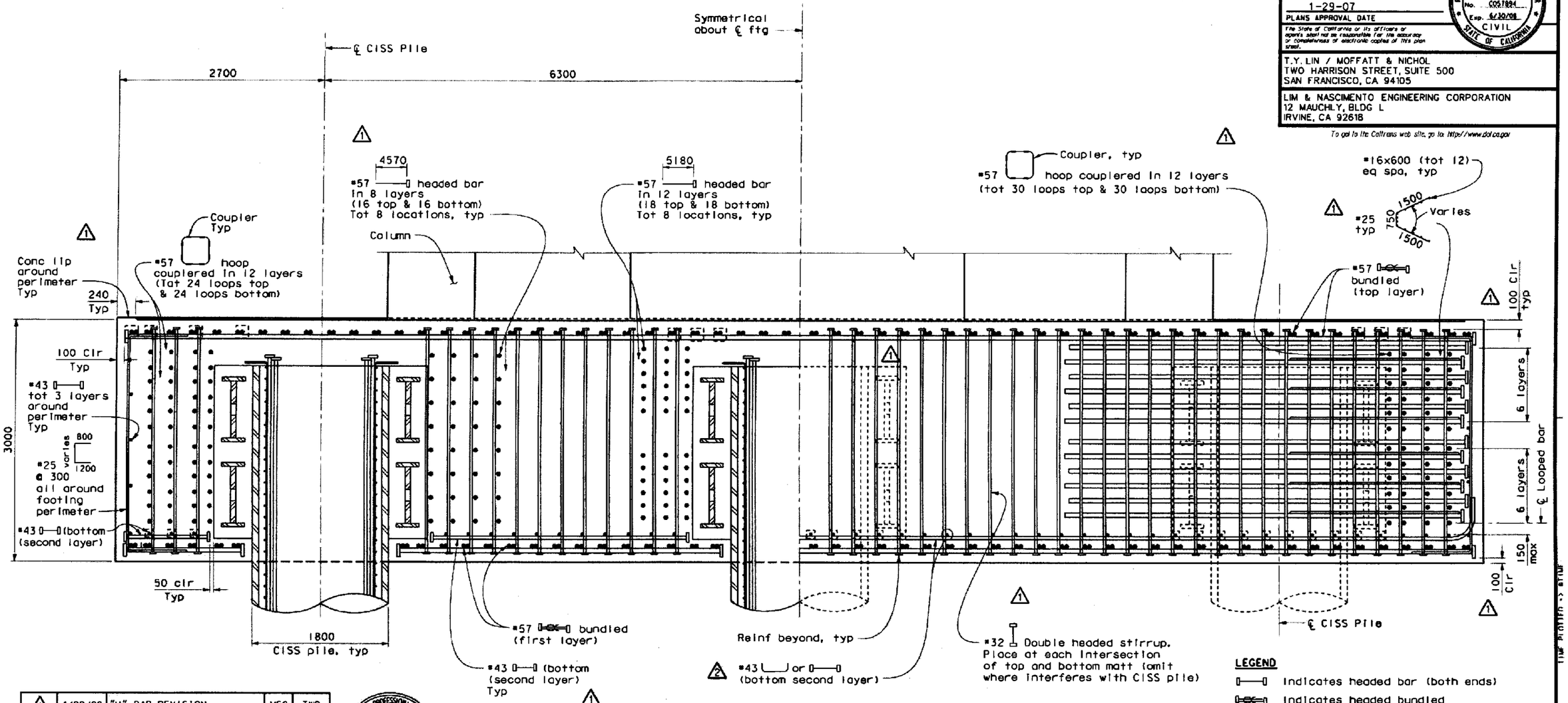

LEGEND

- Indicates headed bar (both ends)
- Indicates headed bundled bars (alternate ends)
- Indicates bundled bars

MARK	DATE	DESCRIPTIONS	BY	CH'D
1	4/22/08	"U" BAR REVISION	MSC	TWD
2	5/1/08	#43 HOOK OR HEAD OPTION	MSC	TWD
		REVISION(S)		

REGISTERED PROFESSIONAL ENGINEER MOHAN S. CHAR No. C057894 Exp. 6/30/10 CIVIL STATE OF CALIFORNIA

STAMP IS VALID FOR REVISION 1 & 2 ONLY

CONTRACT CHANGE ORDER NO. 33-1
SHEET 12 OF 14 04-0120L4

SECTION E-E
PIER E2IR
1:25

Notes:

1. Column reinforcement not shown for clarity.
2. All couplers shall be service butt splices.

ALL DIMENSIONS ARE IN MILLIMETERS UNLESS OTHERWISE SHOWN

DESIGN OVERSIGHT
SAM AKRAD FRANCISCO CARPIO BERNARD CHAN HASAN EL-NATUR
SIGN OFF DATE

	BY	CHECKED
DESIGN	M. CHAR	T. DUDLEY
DETAILS	N. MORCILLO/M. ANDRASEK	M. CHAR
QUANTITIES	N. MORCILLO/Y. KIM	V. SIVAKOLUNDU/T. DUDLEY

PREPARED FOR THE STATE OF CALIFORNIA DEPARTMENT OF TRANSPORTATION

MOHAN S. CHAR
PROJECT ENGINEER

BRIDGE NO. 34-0006L/R
KILOMETER POST 1.6

SAN FRANCISCO OAKLAND BAY BRIDGE
EAST SPAN SEISMIC SAFETY PROJECT

OAKLAND APPROACH STRUCTURES - PHASE I

EASTBOUND FOOTING DETAILS NO. 11

Rev Date: 5-15-98

ORIGINAL SCALE IN MILLIMETERS FOR REDUCED PLANS 0 10 20 30 40 50 60 70 80 90 100

CU 04
EA 0120L1

DISREGARD PRINTS BEARING EARLIER REVISION DATES

REVISION DATES (PRELIMINARY STAGE ONLY)

SHEET 44 OF 224

TIME PLOTTED -> 07:17
DATE PLOTTED -> 07-MAR-2008
USERNAME -> BAKER

DIST.	COUNTY	ROUTE	KILOMETER POST TOTAL PROJECT	SHEET NO.	TOTAL SHEETS
04	Ala	80	1.6/2.7	158R2	643

REGISTERED ENGINEER - CIVIL

1-29-07

PLANS APPROVAL DATE

The State of California or its officers or agents shall not be responsible for the accuracy or completeness of electronic copies of this plan sheet.

REGISTERED PROFESSIONAL ENGINEER MOHAN S. CHAR No. C057894 Exp. 6/30/08 CIVIL STATE OF CALIFORNIA

T.Y. LIN / MOFFATT & NICHOL
TWO HARRISON STREET, SUITE 500
SAN FRANCISCO, CA 94105

LIM & NASCIMENTO ENGINEERING CORPORATION
12 MAUCHLY, BLDG L
IRVINE, CA 92618

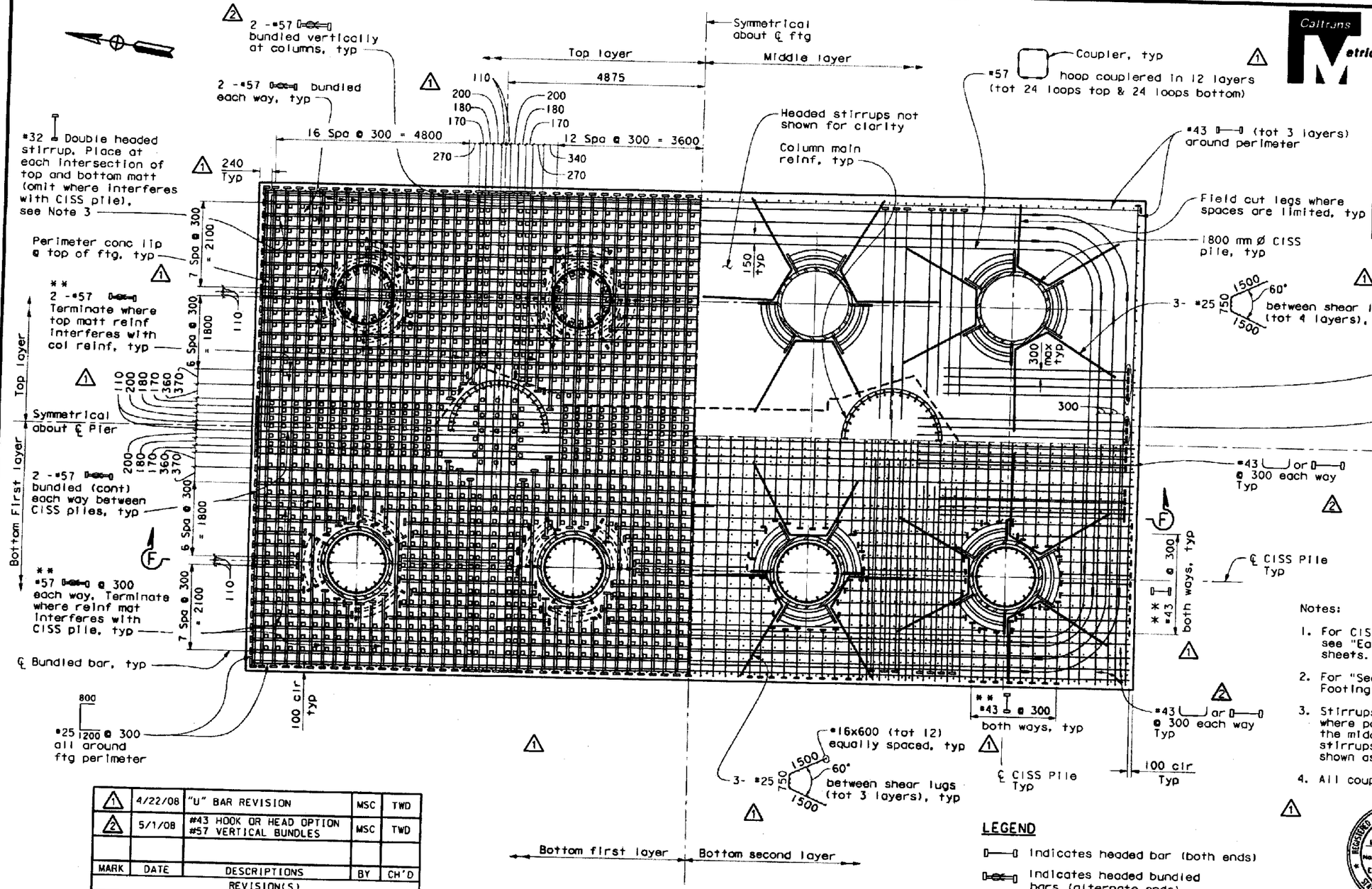

MARK	DATE	DESCRIPTIONS	BY	CH'D
1	4/22/08	"U" BAR REVISION	MSC	TWD
2	5/1/08	#43 HOOK OR HEAD OPTION #57 VERTICAL BUNDLES	MSC	TWD
		REVISION(S)		

CONTRACT CHANGE ORDER NO. 33-1
SHEET 13 OF 14 04-0120L4

FOOTING PLAN - PIER E22R

1:50

Notes:

1. For CISS pile and head anchorage details, see "Eastbound Pile Details No. 1 & No. 2" sheets.
2. For "Section F-F" see "Eastbound Footing Details No. 13" sheet.
3. Stirrups shall be spaced @ 300 max where possible. Move stirrups to clear the middle layer reinf. Min No. of stirrups shall not be less than those shown as "a" on plan.
4. All couplers shall be service butt splices.

LEGEND

- Indicates headed bar (both ends)
- Indicates headed bundled bars (alternate ends)
- Indicates bundled bars
- ** Terminate bars 50 mm clear (where conflict occurs)

REGISTERED PROFESSIONAL ENGINEER MOHAN S. CHAR No. C057894 Exp. 6/30/10 CIVIL STATE OF CALIFORNIA

STAMP IS VALID FOR REVISION 1 & 2 ONLY

Note: The Contractor shall verify all controlling field dimensions before ordering or fabricating any material.

DESIGN OVERSIGHT
SAM AKKAD FRANCISCO CARPIO BERNARD CHAN HASAN EL-HATUR
SIGN OFF DATE
Rev. Date: 5-16-98

	BY	CHECKED
DESIGN	M. CHAR	T. DUDLEY
DETAILS	N. MORCILLO	M. CHAR
QUANTITIES	N. MORCILLO/Y. KIM	V. SIVAKOLUNDU/T. DUDLEY

PREPARED FOR THE STATE OF CALIFORNIA DEPARTMENT OF TRANSPORTATION

MOHAN S. CHAR
PROJECT ENGINEER

ALL DIMENSIONS ARE IN MILLIMETERS UNLESS OTHERWISE SHOWN

ORIGINAL SCALE IN MILLIMETERS FOR REDUCED PLANS 0 10 20 30 40 50 60 70 80 90 100

CU 04
EA 0120L1

BRIDGE NO. 34-0006L/R
KILOMETER POST 1.6

SAN FRANCISCO OAKLAND BAY BRIDGE
EAST SPAN SEISMIC SAFETY PROJECT

OAKLAND APPROACH STRUCTURES - PHASE I

EASTBOUND FOOTING DETAILS NO. 12

DISREGARD PRINTS BEARING EARLIER REVISION DATES

REVISION DATES (PRELIMINARY STAGE ONLY)

SHEET 45 OF 224

DIST.	COUNTY	ROUTE	KILOMETER POST TOTAL PROJECT	SHEET NO.	TOTAL SHEETS
04	Ala	80	1.6/2.7	159R2	643

REGISTERED ENGINEER - CIVIL

1-29-07
PLANS APPROVAL DATE

The State of California or its officers or agents shall not be responsible for the accuracy or completeness of electronic copies of this plan sheet.

REGISTERED PROFESSIONAL ENGINEER MOHAN S. CHAR No. C057894 Exp. 6/30/08 CIVIL STATE OF CALIFORNIA

T.Y. LIN / MOFFATT & NICHOL
TWO HARRISON STREET, SUITE 500
SAN FRANCISCO, CA 94105

LIM & NASCIMENTO ENGINEERING CORPORATION
12 MAUCHLY, BLDG L
IRVINE, CA 92618

REGISTERED PROFESSIONAL ENGINEER MOHAN S. CHAR No. C057894 Exp. 6/30/10 CIVIL STATE OF CALIFORNIA

STAMP IS VALID FOR REVISION 1 & 2 ONLY

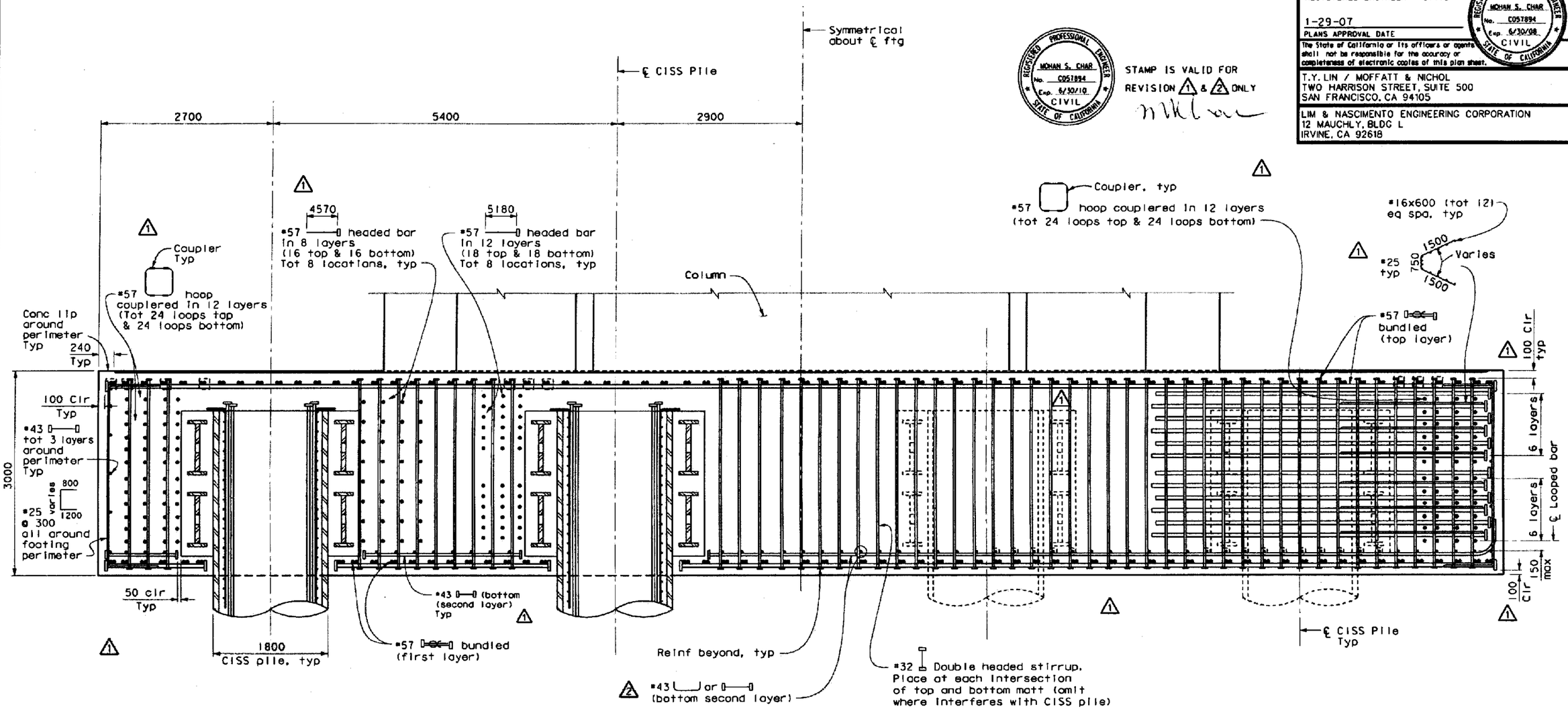

MARK	DATE	DESCRIPTIONS	BY	CH'D
1	4/22/08	"U" BAR REVISION	MSC	TWD
2	5/1/08	#43 HOOK OR HEAD OPTION	MSC	TWD
REVISION(S)				

CONTRACT CHANGE ORDER NO. 33-1
SHEET 14 OF 14 04-0120L4

SECTION F-F
PIER E22R
1:30

LEGEND

- Indicates headed bar (both ends)
- Indicates headed bundled bars (alternate ends)
- Indicates bundled bars

Notes:

1. Column reinforcement not shown for clarity.
2. All couplers shall be service butt splices.

ALL DIMENSIONS ARE IN MILLIMETERS UNLESS OTHERWISE SHOWN

SAN FRANCISCO OAKLAND BAY BRIDGE
EAST SPAN SEISMIC SAFETY PROJECT

OAKLAND APPROACH STRUCTURES - PHASE I

EASTBOUND FOOTING DETAILS NO. 13

DESIGN OVERSIGHT: SAM AKKAD, FRANCISCO CARRIO, BERNARD CHAN, HASAN EL-NATUR
SIGN OFF DATE

	BY	CHECKED
DESIGN	M. CHAR	T. DUDLEY
DETAILS	N. MORCILLO/M. ANDRASEK	M. CHAR
QUANTITIES	N. MORCILLO/Y. KIM	V. SIVAKOLUNDU/T. DUDLEY

PREPARED FOR THE STATE OF CALIFORNIA DEPARTMENT OF TRANSPORTATION

MOHAN S. CHAR
PROJECT ENGINEER

BRIDGE NO. 34-0006L/R
KILOMETER POST 1.6

CU 04
EA 0120L1

DISREGARD PRINTS BEARING EARLIER REVISION DATES

SHEET 46 OF 224

Rev. Date: 5-18-98

ORIGINAL SCALE IN MILLIMETERS FOR REDUCED PLANS 0 10 20 30 40 50 60 70 80 90 100

STATE OF CALIFORNIA - DEPARTMENT OF TRANSPORTATION

CONTRACT CHANGE ORDER

Change Requested by: Engineer

CCO 34	Suppl. No. 0	Contract No. 04 - 0120L4	Road ALA-80-1.6/2.7	FED. AID LOC.: NO FED AID

To: M C M CONSTRUCTION INC

You are directed to make the following changes from the plans and specifications or do the following described work not included in the plans and specifications for this contract. ***NOTE: This change order is not effective until approved by the Engineer.***

Description of work to be done, estimate of quantities and prices to be paid. (Segregate between additional work at contract price, agreed price and force account.) Unless otherwise stated, rates for rental of equipment cover only such time as equipment is actually used and no allowance will be made for idle time. This last percentage shown is the net accumulated increase or decrease from the original quantity in the Engineer's Estimate.

Extra Work at Force Account:

As authorized by the Engineer and in accordance with Section 10-1.11, "Photo Survey/Public Relations," of the Special Provisions furnish the following time-lapse photography and video equipment, and other related equipment:

1) 1 ea. 50" plasma television (1080p resolution; inputs: S-Video, composite, 2 HDMI, 2 component; 16:9 aspect ratio;15000:1 contrast ratio; picture in picture).
2) 1 ea. tilt plasma wall mount up to 50".
3) 1 ea. 50' VGA cable.
4) 1 ea. flat panel antenna (Tranzeo wireless bridge kit; maximum range; configured wireless bridge pair; flat panel; power over Ethernet; 30ft).
5) 1000' foot Cat 5 cable.
6) 1 ea. 14 gauge power cables 1000' sj cord.
7) 2 ea. junction boxes.
8) 1 ea. switch.
9) Misc. hardware.
10) 1 ea. camera (Canon VB-50iR pan/tilt/zoom 26x zoom internet camera).
11) 1 ea. dome enclosure with heater, blower, lightning arrestor and integrated 13 VDC power for the Canon VB-50iR.
12) 1 ea. computer server with SiteProxy license: (2.4 Ghz processor, 1GB RAM, 750 GB HDD aid on MB, dual SVGA monitor output, tower configuration, SiteProxy software, Norton 360, Win XP Pro).

Estimated cost of Extra Work at Force Account $20,000.00

Estimated Cost: Increase ☑ Decrease ☐ $20,000.00

By reason of this order the time of completion will be adjusted as follows: 0 days

Submitted by		
Signature	Resident Engineer BEN GHAFGHAZI	Date 4/11/08
Approval Recommended by		
Signature	Construction Engineer Ben Ghafghazi	Date 4/11/08
Engineer Approval by		
Signature	Construction Engineer Ben Ghafghazi	Date 4/30/08

We the undersigned contractor have given careful consideration to the change proposed and agree, if this proposal is approved, that we will provide all equipment, furnish the materials, except as may otherwise be noted above, and perform all services necessary for the work above specified, and will accept as full payment therefor the prices shown above.

NOTE: If you, the contractor, do not sign acceptance of this order, your attention is directed to the requirements of the specifications as to proceeding with the ordered work and filing a written protest within the time therein specified.

Contractor Acceptance by		
Signature	(Print name and title) EDMUNDO A. IUCHI, TREASURER	Date 4/24/08

STATE OF CALIFORNIA - DEPARTMENT OF TRANSPORTATION

CONTRACT CHANGE ORDER MEMORANDUM

TO: AMER BATA / BEN GHAFGHAZI	FILE: E.A. 04 - 0120L4
FROM: BEN GHAFGHAZI	CO-RTE-PM ALA-80-1.6/2.7
	FED. NO. NO FED AID
CCO#: 34 SUPPLEMENT#: 0 Category Code: AWZZ	CONTINGENCY BALANCE (incl. this change) $16,195,914.70
COST: $20,000.00 INCREASE ☑ DECREASE ☐	HEADQUARTERS APPROVAL REQUIRED? ☐ YES ☑ NO
SUPPLEMENTAL FUNDS PROVIDED: $20,000.00	IS THIS REQUEST IN ACCORDANCE WITH ENVIRONMENTAL DOCUMENTS? ☑ YES ☐ NO
CCO DESCRIPTION: Provide video equipment	**PROJECT DESCRIPTION:** Construct bridge, roadway, building and electrical system.

Original Contract Time:	Time Adj. This Change:	Previously Approved CCO Time Adjustments:	Percentage Time Adjusted: (including this change)	Total # of Unreconciled Deferred Time CCO(s): (including this change)
810 Day(s)	0 Day(s)	0 Day(s)	0 %	2

THIS CHANGE ORDER PROVIDES FOR:

Furnishing time-lapse video, still photography, video survey equipment, and other related equipment materials to document and monitor construction activities, progress and completion of construction of the San Francisco-Oakland Bay Bridge (SFOBB) new east span in accordance with Section 10-1.11, "Photo Survey/Public Relations," of the Special Provisions.

The video and photography equipment and services will capture real time and time lapse photography to document the construction progress of the Oakland Touchdown Project (OTD). The equipment included in this change order will monitor on-site progress of the construction activities from the OTD command center located on Pier 7 in Oakland.

The following equipment was originally used on South South Detour project. It has been moved to another location and must be replaced:

1) 1 ea. 50" plasma television (1080p resolution; inputs: S-Video, composite, 2 HDMI, 2 component; 16:9 aspect ratio;15000:1 contrast ratio; picture in picture).
2) 1 ea. tilt plasma wall mount up to 50".
3) 1 ea. 50' VGA cable.
4) 1 ea. flat panel antenna (Tranzeo wireless bridge kit; maximum range; configured wireless bridge pair; flat panel; power over Ethernet; 30ft).
5) 1000' foot Cat 5 cable.
6) 1 ea. 14 gauge power cables 1000' sj cord.
7) 2 ea. junction boxes.
8) 1 ea. switch.
9) Misc. hardware.
10) 1 ea. camera (Canon VB-50iR pan/tilt/zoom 26x zoom internet camera).
11) 1 ea. dome enclosure with heater, blower, lightning arrestor and integrated 13 VDC power for the Canon VB-50iR.

The following equipment is new:

1) 1 ea. computer server with SiteProxy license: (2.4 Ghz processor, 1GB RAM, 750 GB HDD aid on MB, dual SVGA monitor output, tower configuration, SiteProxy software, Norton 360, Win XP Pro).

This work will be paid for as extra work at force account, for the estimated cost of $20,000.00, which can be financed from the supplemental funds of $20,000.00 allotted for this work.

Design and Maintenance concurrence is not necessary since this work is included in the contract documents.

No adjustment of contract time is warranted as this change does not affect the controlling operation.

ADA Notice: For individuals with sensory disabilities, this document is available in alternate formats. For information call: (916) 654-6410 or TDD (916) 654-3880 or write Records and Forms Management, 1120 N Street, MS-89, Sacramento, CA 95814.

CONCURRED BY:		
Construction Engineer:	Ben Ghafghazi	Date 4/11/08
Bridge Engineer:		Date
Project Engineer:		Date
Project Manager:		Date
FHWA Rep.:		Date
Environmental:		Date
Other (specify):		Date
Other (specify):		Date
District Prior Approval By:		Date
HQ (Issue Approve) By:		Date
Resident Engineer's Signature:		Date 4/11/08

ESTIMATE OF COST

	THIS REQUEST	TOTAL TO DATE
ITEMS	$0.00	$0.00
FORCE ACCOUNT	$20,000.00	$20,000.00
AGREED PRICE	$0.00	$0.00
ADJUSTMENT	$0.00	$0.00
TOTAL	$20,000.00	$20,000.00

FEDERAL PARTICIPATION

☐ PARTICIPATING ☐ PARTICIPATING IN PART ☑ NONE
☐ NON-PARTICIPATING (MAINTENANCE) ☐ NON-PARTICIPATING

FEDERAL SEGREGATION (if more than one Funding Source or P.I.P. type)
☑ CCO FUNDED PER CONTRACT ☐ CCO FUNDED AS FOLLOWS

FEDERAL FUNDING SOURCE	PERCENT

ADA Notice: For individuals with sensory disabilities, this document is available in alternate formats. For information call: (916) 654-6410 or TDD (916) 654-3880 or write Records and Forms Management, 1120 N Street, MS-89, Sacramento, CA 95814.

CONTRACT CHANGE ORDER

Change Requested by: Engineer

CCO 39	Suppl. No. 0	Contract No. 04 - 0120L4	Road ALA-80-1.6/2.7	FED. AID LOC.: NO FED AID

To: **M C M CONSTRUCTION INC**

You are directed to make the following changes from the plans and specifications or do the following described work not included in the plans and specifications for this contract. ***NOTE: This change order is not effective until approved by the Engineer.***

Description of work to be done, estimate of quantities and prices to be paid. (Segregate between additional work at contract price, agreed price and force account.) Unless otherwise stated, rates for rental of equipment cover only such time as equipment is actually used and no allowance will be made for idle time. This last percentage shown is the net accumulated increase or decrease from the original quantity in the Engineer's Estimate.

Revise Section 10-3.18, "Roadway Lighting Assembly," of the Special Provisions to increase the number of demonstration roadway lighting assembly units from three to four. Two of the units shall be welded steel poles as specified in the contract and two shall be brake bent style per the Contractor's submittal, MCM-SUB-000424, dated February 28, 2008. Use "Base Plate" detail on Sheet E-244 of the contract plans for pole installation. "Base Plate" detail shown on Sheet E-16 of the contract plans shall not be used.

Poles shall be delivered no later than 90 days after approved submittals are received by the Contractor from the State.

The following language shall be added to the beginning of the third paragraph of Section 10-3.18, "Roadway Lighting Assembly," of the Special Provisions:

"Design details of the light pole assemblies are not to be considered proprietary. If the Department selects the brake bent design there will be loss of proprietary ownership with regard to shop drawings and submittals."

Extra Work at Force Account:

Provide labor, equipment and materials as necessary to install and wire brake bent pole on existing foundation at Station WB 74+43 as shown on 3 of 3 of this CCO.

Estimated cost of Extra Work at Force Account $15,000.00

Extra Work at Lump Sum:

Replace one welded steel pole as specified in the contract with a brake bent pole and provide one additional brake bent pole. Brake bent poles shall be furnished by the Contractor in accordance with Contractor's submittal MCM-SUB-000424 and shall include the designers' comments to this submittal.

For this work, the contractor will be paid the sum of $200,523.00. This sum constitutes full compensation, including markups, for this change.

Extra Work at Agreed Lump Sum $200,523.00

CONTRACT CHANGE ORDER

Change Requested by: Engineer

CCO 39	Suppl. No. 0	Contract No. 04 - 0120L4	Road ALA-80-1.6/2.7	FED. AID LOC.: NO FED AID

Estimated Cost: **Increase** ☑ **Decrease** ☐ **$215,523.00**

By reason of this order the time of completion will be adjusted as follows: 0 days

Submitted by

Signature	Resident Engineer BEN GHAFGHAZI	Date 9/4/08

Approval Recommended by

Signature	Construction Manager Amer Bata	Date 9/9/08

Engineer Approval by

Signature	Construction Manager Amer Bata	Date 9/18/08

We the undersigned contractor, have given careful consideration to the change proposed and agree, if this proposal is approved, that we will provide all equipment, furnish the materials, except as may otherwise be noted above, and perform all services necessary for the work above specified, and will accept as full payment therefor the prices shown above.

NOTE: If you, the contractor, do not sign acceptance of this order, your attention is directed to the requirements of the specifications as to proceeding with the ordered work and filing a written protest within the time therein specified.

Contractor Acceptance by

Signature	(Print name and title) EDMUNDO A. PUCHI, TREASURER	Date 9/15/08

DIST	COUNTY	ROUTE	KILOMETER POST TOTAL PROJECT	SHEET No	TOTAL SHEETS
04	Ala	80	1.6/2.7	379R1	643

REGISTERED ELECTRICAL ENGINEER 05/15/06 DATE

1-29-07
PLANS APPROVAL DATE

PB POWER, Inc.
A Parsons Brinckerhoff Company
303 Second St., Suite 700N
San Francisco, CA 94107-1317

REGISTERED PROFESSIONAL ENGINEER JENS ERLINGSSON No. 8249 Exp. 9/30/08 ELECTRICAL STATE OF CALIFORNIA

The State of California or its officers or agents shall not be responsible for the accuracy or completeness of electronic copies of this plan sheet.

To get to the Caltrans web site, go to: http://www.dot.ca.gov

Caltrans Metric

SHEET NOTES:

(1) For Call Box conduit installation, see sheet E-39.

(2) The Demonstration Roadway Lighting Assembly is to be powered from the Skyway Westbound Midspan Substation. The 480 V conductors + ground from the Midspan Substation to the pull box (PB-LTG), adjacent to the lighting assembly, have been installed under a different contract. The Contractor shall splice the existing 480 V + ground conductors in the two PB-LTG pull boxes nearest the lighting assembly to provide for conductor continuity from the Midspan Substation to the lighting assembly. In addition, the Contractor shall install 2#10 + #10 ground conductors from the lighting assembly to the nearest PB-LTG pull box and splice the conductors to the existing conductors in the PB-LTG.

(3) Except for the Demonstration Roadway Lighting assembly.

NOTES:

1. References:
   - For typical details and locations of conduit connections to light poles, barrier outlet boxes, call boxes and CMS, see sheets E-37 and E-38.
   - For types of pull boxes, splice boxes and enclosures, see sheet E-44.
   - For Call Box schedule and wiring diagram, see sheets E-170 to E-172.
   - For light pole location, see sheet E-38.
   - For 480 V roadway lighting wiring diagram, see sheet E-47 and E-48.
   - For conduit and cable tray schedules, see sheets starting at E-224.
   - For details of Roadway Lighting Assembly see sheets starting at E-243.
   - For installation of conduits inside demonstration lighting pole, see sheets E-15A and E-15B.

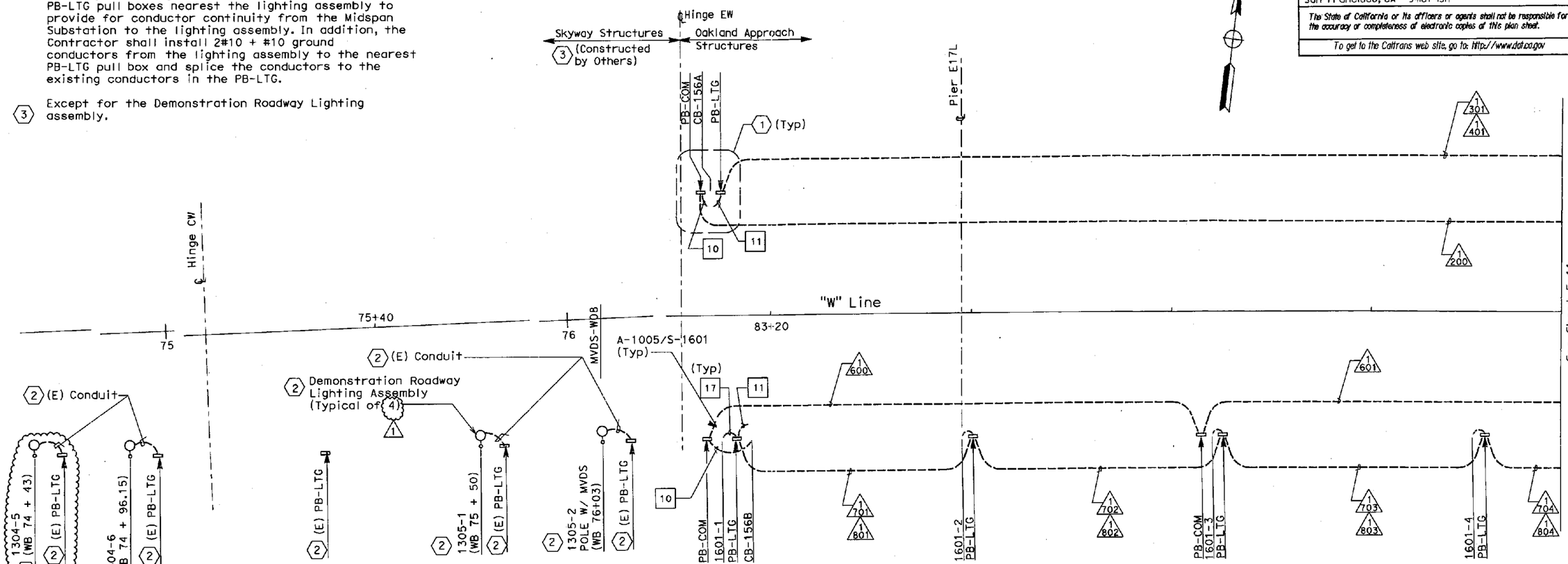

ROADWAY CONDUIT PLAN

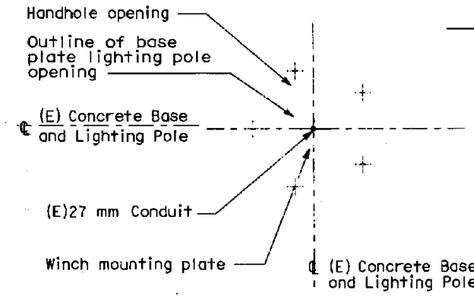

CONDUIT STUB UP PLAN

FOR 20 METER HIGH LIGHTING POLES (1304-5, 1304-6 AND 1305-1)
NO SCALE

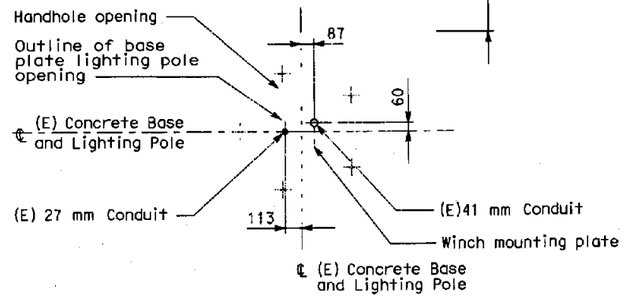

CONDUIT STUB UP PLAN

20 METER HIGH LIGHTING POLE (1305-2) WITH MVDS
NO SCALE

REGISTERED PROFESSIONAL ENGINEER S. A. ESTOQUE, JR. No. E-10151 Exp. 12/31/2008 ELECTRICAL STATE OF CALIFORNIA

MARK	DATE	DESCRIPTIONS	REV	CK	CCO NO.
1	1/9/08	Added Demonstration Pole 1304-5	EJL	SE	

REVISIONS

CONTRACT CHANGE ORDER NO. 39
SHEET 3 OF 3 04-0120L4
8/6/08

ROADWAY AND GIRDER LEVEL WESTBOUND
(LIGHTING AND ELECTRICAL SYSTEMS)

SCALE: 1:200

THIS PLAN IS ACCURATE FOR ELECTRICAL WORK ONLY.

E-10

STATE OF CALIFORNIA - DEPARTMENT OF TRANSPORTATION
Caltrans

DESIGN OVERSIGHT: BEHZAD GOLEMOHAMMADI

CALCULATED/DESIGNED BY	FK	DATE 2/06	REVISED BY	DATE REVISED
CHECKED BY	AB	2/06		

LAST REVISION 00-00-00 | DATE PLOTTED => 1/10/2008 | TIME PLOTTED => $TIME

FOR REDUCED PLANS ORIGINAL SCALE IS IN MILLIMETERS 0 20 40 60 80

DGN FILE =>T:\13103\MS\pse\OTD-Contract 1\CCO\Electrical\CCO-xx\40120luad10.dgn
USERNAME =>$USER

CU 04251 | EA 0120L1

STATE OF CALIFORNIA - DEPARTMENT OF TRANSPORTATION

CONTRACT CHANGE ORDER MEMORANDUM

TO: AMER BATA / BEN GHAFGHAZI	FILE: **E.A.** 04 - 0120L4
FROM: BEN GHAFGHAZI	**CO-RTE-PM** ALA-80-1.6/2.7
	FED. NO. NO FED AID
CCO#: **39** SUPPLEMENT#: **0** Category Code: **CBSA**	CONTINGENCY BALANCE (incl. this change) **$16,966,678.50**
COST: **$215,523.00** INCREASE ☑ DECREASE ☐	HEADQUARTERS APPROVAL REQUIRED? ☑ YES ☐ NO
SUPPLEMENTAL FUNDS PROVIDED: **$0.00**	IS THIS REQUEST IN ACCORDANCE WITH ENVIRONMENTAL DOCUMENTS? ☑ YES ☐ NO
CCO DESCRIPTION: Revise 10-3.18 of the Special Provisions	**PROJECT DESCRIPTION:** Construct bridge, roadway, building and electrical system.

Original Contract Time:	Time Adj. This Change:	Previously Approved CCO Time Adjustments:	Percentage Time Adjusted: (including this change)	Total # of Unreconciled Deferred Time CCO(s): (including this change)
810 Day(s)	**0** Day(s)	**0** Day(s)	**0** %	**5**

THIS CHANGE ORDER PROVIDES FOR:

Revising Section 10-3.18, "Roadway Lighting Assembly," of the Special Provisions to increase the number of demonstration roadway lighting assembly units from three to four. Two of the units shall be welded steel poles as specified in the contract and two shall be break bent style per Contractor's submittal MCM-SUB-000424 dated February 28, 2008. Installation and wiring of additional break bent pole at Sta. WB 74+43 per sheet 3 of 3 of the CCO.

Brake bent poles shall be subject to the following conditions:

1) Designers' comments will be incorporated into the submittal.
2) Brake bent poles will be delivered no later than 90 days after approved submittals are received by the Contractor from the State.
3) Contractor will not own design of brake bent pole.

This change is necessary to evaluate the brake bent style of pole submitted by the Contractor for possible future use on the New East Span of the Bay Bridge. The contract calls for three pentagonal section poles constructed of steel plate with a welded seam along the length of the pole. The Contractor has proposed a design that is brake bent. In lieu of welding, the steel plate will be bent into the section required. Caltrans Management has requested two poles be constructed per contract and two per the Contractor's submittal. Ken Terpstra, Project Manager, concurs with this request. This work was formally requested by memo from Steven Hulsebus, Office Chief, Toll Bridge Design, on March 14, 2008. This change has been discussed and concurred by Jaime Gutierrez, Project Engineer, Patrick Treacy, Headquarters Construction Coordinator, and Mike Forner, Principal Transportation Engineer, SFOBB. Electrical Maintenance concurrence will be addressed during the evaluation phase for each of the two pole types. Issue and approve was granted by Headquarters on August 12, 2008.

Providing brake bent poles will be paid as extra work at lump sum because: 1) Item #181, Roadway Lighting Assembly, is a lump sum item that cannot be increased, and 2) the brake bent pole is not included in the original contract. The cost of this work is $200,523.00. A detailed cost analysis is on file. Installation and wiring of the additional brake bent pole will be paid as extra work at force account for an estimated $15,000.00. Total cost of this CCO is $215,523.00, which can be financed from the contingency fund.

No adjustment of contract time is warranted as this change does not affect the controlling operation.

ADA Notice: For individuals with sensory disabilities, this document is available in alternate formats. For information call: (916) 654-6410 or TDD (916) 654-3880 or write Records and Forms Management, 1120 N Street, MS-89, Sacramento, CA 95814.

CONCURRED BY:			
Construction Engineer:	Ben Ghafghazi	Date	9/4/08
Bridge Engineer:		Date	
Project Engineer:	Jaime Gutierrez	Date	3/14/08
Project Manager:	Ken Terprstra	Date	2/28/08
FHWA Rep.:		Date	
Environmental:		Date	
Other (specify):	Steven Hulsebus	Date	3/14/08
Other (specify):		Date	
District Prior Approval By:	Mike Forner, Principal TE	Date	4/2/08
HQ (Issue Approve) By:	Ken Darby	Date	8/12/08
Resident Engineer's Signature:		Date	9/4/08

ESTIMATE OF COST

	THIS REQUEST	TOTAL TO DATE
ITEMS	$0.00	$0.00
FORCE ACCOUNT	$15,000.00	$15,000.00
AGREED PRICE	$200,523.00	$200,523.00
ADJUSTMENT	$0.00	$0.00
TOTAL	$215,523.00	$215,523.00

FEDERAL PARTICIPATION

☐ PARTICIPATING ☐ PARTICIPATING IN PART ☑ NONE
☐ NON-PARTICIPATING (MAINTENANCE) ☐ NON-PARTICIPATING

FEDERAL SEGREGATION (if more than one Funding Source or P.I.P. type)
☑ CCO FUNDED PER CONTRACT ☐ CCO FUNDED AS FOLLOWS

FEDERAL FUNDING SOURCE	PERCENT

ADA Notice: For individuals with sensory disabilities, this document is available in alternate formats. For information call: (916) 654-6410 or TDD (916) 654-3880 or write Records and Forms Management, 1120 N Street, MS-89, Sacramento, CA 95814.

STATE OF CALIFORNIA - DEPARTMENT OF TRANSPORTATION

CONTRACT CHANGE ORDER MEMORANDUM

DATE: 9/21/2009 Page 1 of 1

TO: AMER BATA / BEN GHAFGHAZI

FROM: BEN GHAFGHAZI

FILE: E.A. 04 - 0120L4
CO-RTE-PM ALA-80-1.6/2.7
FED. NO. NO FED AID

CCO#: 39 SUPPLEMENT#: 1 Category Code: CBSA

CONTINGENCY BALANCE (incl. this change) $4,610,103.40

COST: $40,000.00 INCREASE ☑ DECREASE ☐

HEADQUARTERS APPROVAL REQUIRED? ☑ YES ☐ NO

SUPPLEMENTAL FUNDS PROVIDED: $0.00

IS THIS REQUEST IN ACCORDANCE WITH ENVIRONMENTAL DOCUMENTS? ☑ YES ☐ NO

CCO DESCRIPTION:
Additional funds to install poles.

PROJECT DESCRIPTION:
Construct bridge, roadway, building and electrical system.

Original Contract Time:	Time Adj. This Change:	Previously Approved CCO Time Adjustments:	Percentage Time Adjusted: (including this change)	Total # of Unreconciled Deferred Time CCO(s): (including this change)
810 Day(s)	0 Day(s)	184 Day(s)	23 %	11

THIS CHANGE ORDER PROVIDES FOR:
Additional funds for installation of brake bent pole.

This change is necessary to cover the cost of installing the demonstration lighting pole at Sta. W 74+73. Per CCO No. 39, Supplement No. 0, brake bent pole at Sta. W 74+73 was added to the contract and installation was performed at EWFA. The pole is to be installed on an existing foundation on the Skyway structure. Fitting the pole to the foundation required more time and effort than originally planned.

This work will be paid as Extra Work at Force Account for $40,000.00, which can be financed from the contingency fund.

This change has been discussed and concurred with Mike Forner, SFOBB Construction Manager; Rich Foley, Headquarters Construction Coordinator; and Ken Terpstra, Project Manger. Design and maintenance concurrence is not necessary since this CCO is only for additional funds only and does not add any new work. An Issue and Approve was granted by Headquarters on 10/07/09

No adjustment of contract time is warranted as this change does not affect the controlling operation.

CONCURRED BY:

Construction Engineer:	Ben Ghafghazi	Date 9/23/09
Bridge Engineer:		Date
Project Engineer:		Date
Project Manager:	Ken Terprstra	Date
FHWA Rep.:		Date
Environmental:		Date
Other (specify):		Date
Other (specify):		Date
District Prior Approval By:	Mike Forner, Principal TE	Date
HQ (Issue Approve) By:		Date
Resident Engineer's Signature:		Date 9/23/09

ESTIMATE OF COST

	THIS REQUEST	TOTAL TO DATE
ITEMS	$0.00	$0.00
FORCE ACCOUNT	$40,000.00	$55,000.00
AGREED PRICE	$0.00	$200,523.00
ADJUSTMENT	$0.00	$0.00
TOTAL	$40,000.00	$255,523.00

FEDERAL PARTICIPATION

☐ PARTICIPATING ☐ PARTICIPATING IN PART ☑ NONE
☐ NON-PARTICIPATING (MAINTENANCE) ☐ NON-PARTICIPATING

FEDERAL SEGREGATION (if more than one Funding Source or P.I.P. type)
☑ CCO FUNDED PER CONTRACT ☐ CCO FUNDED AS FOLLOWS

FEDERAL FUNDING SOURCE	PERCENT

ADA Notice: For individuals with sensory disabilities, this document is available in alternate formats. For information call: (916) 654-6410 or TDD (916) 654-3880 or write Records and Forms Management, 1120 N Street, MS-89, Sacramento, CA 95814.

STATE OF CALIFORNIA - DEPARTMENT OF TRANSPORTATION

CONTRACT CHANGE ORDER

Change Requested by: Engineer

CCO 39	Suppl. No. 1	Contract No. 04 - 0120L4	Road ALA-80-1.6/2.7	FED. AID LOC.: NO FED AID

To: **M C M CONSTRUCTION INC**

You are directed to make the following changes from the plans and specifications or do the following described work not included in the plans and specifications for this contract. ***NOTE: This change order is not effective until approved by the Engineer.***

Description of work to be done, estimate of quantities and prices to be paid. (Segregate between additional work at contract price, agreed price and force account.) Unless otherwise stated, rates for rental of equipment cover only such time as equipment is actually used and no allowance will be made for idle time. This last percentage shown is the net accumulated increase or decrease from the original quantity in the Engineer's Estimate.

Additional funds for installation of brake bent pole.

Extra Work at Force Account:

Provide labor, equipment and materials as necessary to install and wire brake bent pole on existing foundation at Station WB 74+43 per the details specified in CCO No. 39, Supplement No. 0.

Estimated cost of Extra Work at Force Account $40,000.00

Estimated Cost: **Increase** ☑ **Decrease** ☐ **$40,000.00**

By reason of this order the time of completion will be adjusted as follows: 0 days

Submitted by

Signature	Resident Engineer BEN GHAFGHAZI	Date 9/25/09

Recommended for Approval by

Signature	Construction Manager Amer Bata	Date 9/26/09

Approved by

Signature	Construction Manager Amer Bata	Date 9/26/09

We the undersigned contractor, have given careful consideration to the change proposed and agree, if this proposal is approved, that we will provide all equipment, furnish the materials, except as may otherwise be noted above, and perform all services necessary for the work above specified, and will accept as full payment therefor the prices shown above.

NOTE: If you, the contractor, do not sign acceptance of this order, your attention is directed to the requirements of the specifications as to proceeding with the ordered work and filing a written protest within the time therein specified.

Contractor Accepts and Agrees by

Signature	(Print name and title)	Date

STATE OF CALIFORNIA - DEPARTMENT OF TRANSPORTATION

CONTRACT CHANGE ORDER

Change Requested by: Engineer

CCO 40	Suppl. No. 0	Contract No. 04 - 0120L4	Road ALA-80-1.6/2.7	FED. AID LOC.: NO FED AID

To: **M C M CONSTRUCTION INC**

You are directed to make the following changes from the plans and specifications or do the following described work not included in the plans and specifications for this contract. ***NOTE: This change order is not effective until approved by the Engineer.***

Description of work to be done, estimate of quantities and prices to be paid. (Segregate between additional work at contract price, agreed price and force account.) Unless otherwise stated, rates for rental of equipment cover only such time as equipment is actually used and no allowance will be made for idle time. This last percentage shown is the net accumulated increase or decrease from the original quantity in the Engineer's Estimate.

Revise Dimension "A" to extend to the corners of the pentagonal columns as shown on revised plan sheet 171R1 of 643 per sheet 3 of 3 of this CCO. This sheet replaces sheet 171 of 643 of the original contract plans.

There will be no cost or credit due to this change.

Estimated Cost: **Increase** ☐ **Decrease** ☐ **$0.00**

By reason of this order the time of completion will be adjusted as follows: 0 days

Submitted by

Signature	Resident Engineer BEN GHAFGHAZI	Date 3/17/08

Approval Recommended by

Signature	Construction Engineer Ben Ghafghazi	Date 3/17/08

Engineer Approval

Signature	Construction Engineer Ben Ghafghazi	Date 6/25/08

We the undersigned contractor, have given careful consideration to the change proposed and agree, if this proposal is approved, that we will provide all equipment, furnish the materials, except as may otherwise be noted above, and perform all services necessary for the work above specified, and will accept as full payment therefor the prices shown above.

NOTE: If you, the contractor, do not sign acceptance of this order, your attention is directed to the requirements of the specifications as to proceeding with the ordered work and filing a written protest within the time therein specified.

Contractor Acceptance by

Signature	(Print name and title) EDMUNDO A. PUCHI, TREASURER	Date 5/5/08

DIST	COUNTY	ROUTE	KILOMETER POST TOTAL PROJECT	SHEET NO.	TOTAL SHEETS
04	Ala	80	1.6/2.7	171R1	643

Adam Wang
REGISTERED ENGINEER - CIVIL
1-29-07
PLANS APPROVAL DATE

REGISTERED PROFESSIONAL ENGINEER ADAM TN WANG No. 40402 Exp. 3-31-2009 CIVIL STATE OF CALIFORNIA

The State of California or its officers or agents shall not be responsible for the accuracy or completeness of electronic copies of this plan sheet.

T.Y. LIN / MOFFATT & NICHOL
TWO HARRISON STREET, SUITE 500
SAN FRANCISCO, CA 94105

W. KOO & ASSOCIATES, INC
625 THE CITY DRIVE SOUTH, SUITE 200
ORANGE, CA 92868

To get to the Caltrans web site, go to: http://www.dot.ca.gov

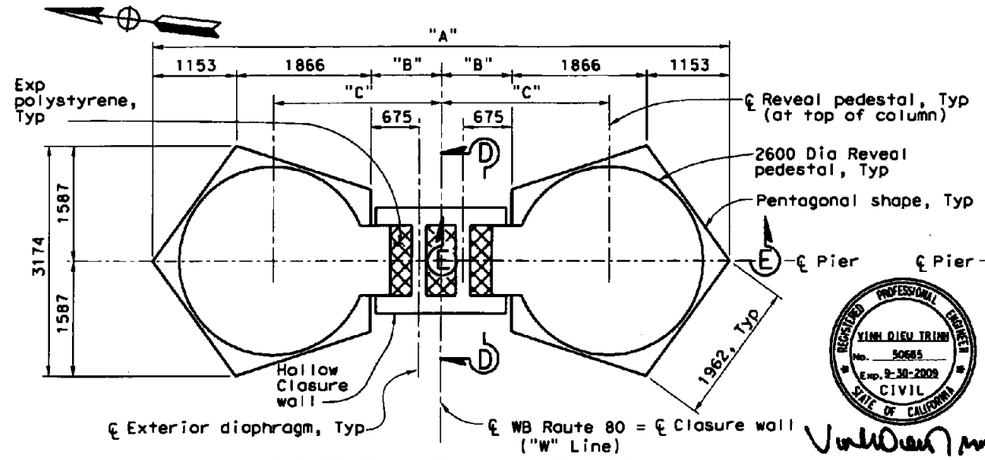

PIERS E17L, E18L AND E20L

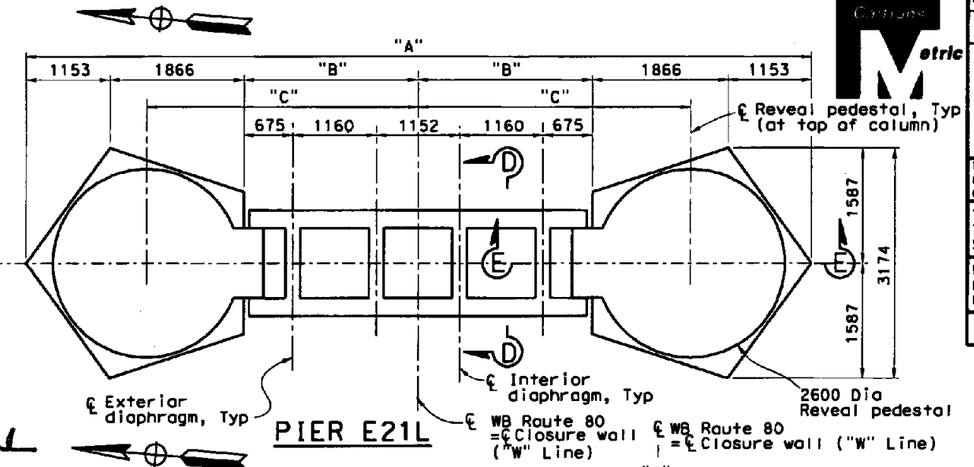

PIER E21L

REGISTERED PROFESSIONAL ENGINEER VINH DIEU TRINH No. 50685 Exp. 9-30-2009 CIVIL STATE OF CALIFORNIA

STAMP IS VALID FOR REVISION 1 ONLY

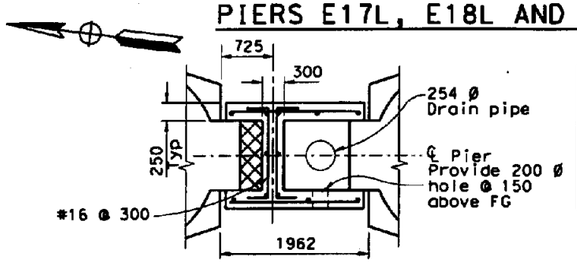

PIER E19L

MARK	DATE	DESCRIPTIONS	BY	CH'D	CCO#
1	3/13/08	REVISE DIMENSION LINE	VT	JSK	

REVISIONS

CONTRACT CHANGE ORDER NO. 40
SHEET 3 OF 3 04-0120L4

CLOSURE WALL LAYOUT
1:40

PIER E22L

Note:
For Section "F-F", see "WB Pier Details No. 1" sheet.

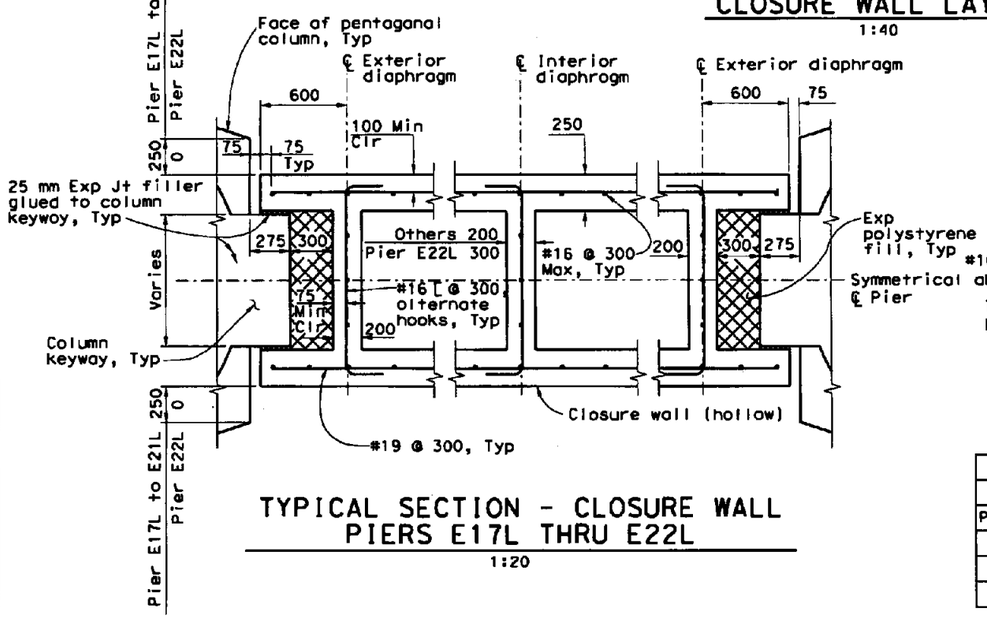

TYPICAL SECTION - CLOSURE WALL
PIERS E17L THRU E22L
1:20

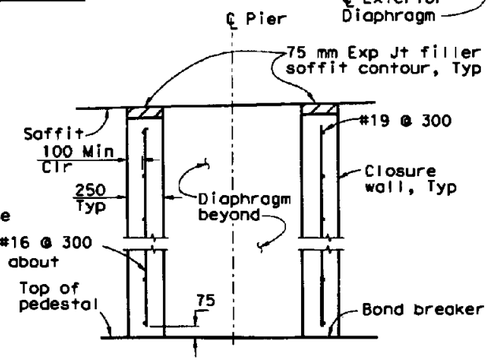

SECTION D-D
1:20

PIER DIMENSION TABLE			
Location	"A"	"B"	"C"
Piers E17L-E19L	8000	981	2331
Pier E20L	8478	1220	2570
Pier E21L	10 860	2411	3761
Pier E22L	13 096	3529	4879

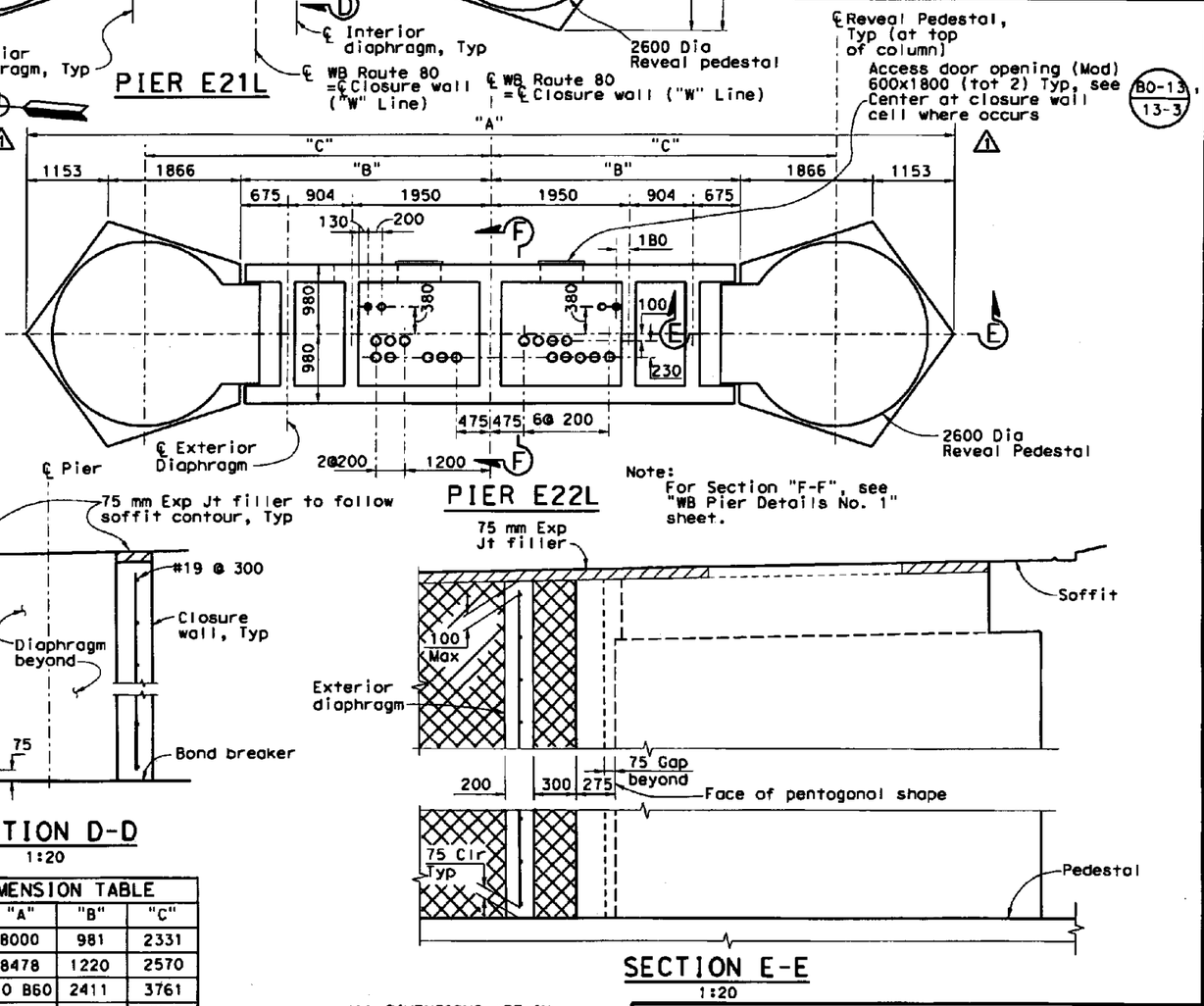

SECTION E-E
1:20

ALL DIMENSIONS ARE IN MILLIMETERS UNLESS OTHERWISE SHOWN

SAN FRANCISCO OAKLAND BAY BRIDGE
EAST SPAN SEISMIC SAFETY PROJECT

OAKLAND APPROACH STRUCTURES-PHASE 1

WESTBOUND PIER DETAILS NO. 3

DESIGN OVERSIGHT
SAB MIKAD FRANCISCO CARPIO BERNARD CHAN HASAN EL-NATUR
8-10-06
SIGN OFF DATE

DESIGN	BY X. Wu	CHECKED A. Moubayed	
DETAILS	BY A. Segura	CHECKED A. Moubayed	
QUANTITIES	BY O. Jaradot	CHECKED H. Haroun	

PREPARED FOR THE STATE OF CALIFORNIA DEPARTMENT OF TRANSPORTATION

Adam Wang
PROJECT ENGINEER

BRIDGE NO. 34-0006L/R
KILOMETER POST 1.6

CU 04
EA 0120L1

DISREGARD PRINTS BEARING EARLIER REVISION DATES
REVISION DATES (PRELIMINARY STAGE ONLY) 10/28/03 1/28/04 10/27/04 2/24/05 5/24/05 11/24/05 1/31/06 4/21/06 7/28/06 3/13/08

SHEET 58 OF 224

Rev. Date: 5-18-98

ORIGINAL SCALE IN MILLIMETERS FOR REDUCED PLANS 0 10 20 30 40 50 60 70 80 90 100

FILE => ...\04-0120L1-34-006-1-pierdet3.dgn

USERNAME => $USER DATE PLOTTED => 6/16/2008 TIME PLOTTED => 9:54:23 AM

STATE OF CALIFORNIA - DEPARTMENT OF TRANSPORTATION

CONTRACT CHANGE ORDER MEMORANDUM

DATE: 3/17/2008 Page 1 of 1

TO: AMER BATA / BEN GHAFGHAZI	FILE: E.A. 04 - 0120L4
FROM: BEN GHAFGHAZI	CO-RTE-PM ALA-80-1.6/2.7
	FED. NO. NO FED AID
CCO#: 40 SUPPLEMENT#: 0 Category Code: CHPT	CONTINGENCY BALANCE (incl. this change) $17,166,678.50
COST: $0.00 INCREASE ☐ DECREASE ☐	HEADQUARTERS APPROVAL REQUIRED? ☐ YES ☑ NO
SUPPLEMENTAL FUNDS PROVIDED: $0.00	IS THIS REQUEST IN ACCORDANCE WITH ENVIRONMENTAL DOCUMENTS? ☑ YES ☐ NO
CCO DESCRIPTION: Pier E22L Column Dimension Change	**PROJECT DESCRIPTION:** Construct bridge, roadway, building and electrical system.

Original Contract Time:	Time Adj. This Change:	Previously Approved CCO Time Adjustments:	Percentage Time Adjusted: (including this change)	Total # of Unreconciled Deferred Time CCO(s): (including this change)
810 Day(s)	0 Day(s)	0 Day(s)	0 %	1

THIS CHANGE ORDER PROVIDES FOR:

Revision in plan details at Pier E-22L as shown on Sheet 3 of 3 of the CCO.

The dimension line for Dimension "A" on sheet 171 of 643 of the Contract Plans was found to be incorrect. The Dimension line only went to the centerline of each column and should extend to the corners of the pentagonal columns per the Pier Dimension Table on plan sheet 171 of 643. This CCO is being generated to incorporate this change to the contract plans..

No adjustment of the contract time is warranted, as this change does not affect the controlling operation.

This change was discussed and concurred by Ade Akinsanya, Structures Design, Jal N. Birdy, Project Engineer for Moffatt & Nichol, and Adam Wang, designer for PBS&J on 3/14/08.

Maintenance concurrence is not necessary since this CCO only changes plan details and no new work is being added.

CONCURRED BY:			
Construction Engineer:	Ben Ghafghazi	Date	6/19/08
Bridge Engineer:	Mehran Ardakanian	Date	
Project Engineer:		Date	
Project Manager:		Date	
FHWA Rep.:		Date	
Environmental:		Date	
Other (specify):	Ade Akinsanya, Structures Design	Date	3/14/08
Other (specify):	Jal Birdy, Moffat Nichol	Date	3/14/08
District Prior Approval By:		Date	
HQ (Issue Approve) By:		Date	
Resident Engineer's Signature:		Date	6/19/08

ESTIMATE OF COST

	THIS REQUEST	TOTAL TO DATE
ITEMS	$0.00	$0.00
FORCE ACCOUNT	$0.00	$0.00
AGREED PRICE	$0.00	$0.00
ADJUSTMENT	$0.00	$0.00
TOTAL	$0.00	$0.00

FEDERAL PARTICIPATION

☐ PARTICIPATING ☐ PARTICIPATING IN PART ☑ NONE
☐ NON-PARTICIPATING (MAINTENANCE) ☐ NON-PARTICIPATING

FEDERAL SEGREGATION (if more than one Funding Source or P.I.P. type)
☑ CCO FUNDED PER CONTRACT ☐ CCO FUNDED AS FOLLOWS

FEDERAL FUNDING SOURCE	PERCENT

ADA Notice: For individuals with sensory disabilities, this document is available in alternate formats. For information call: (916) 654-6410 or TDD (916) 654-3880 or write Records and Forms Management, 1120 N Street, MS-89, Sacramento, CA 95814.

STATE OF CALIFORNIA - DEPARTMENT OF TRANSPORTATION

CONTRACT CHANGE ORDER

Change Requested by: Engineer

CCO 41	Suppl. No. 0	Contract No. 04 - 0120L4	Road ALA-80-1.6/2.7	FED. AID LOC.: NO FED AID

To: **M C M CONSTRUCTION INC**

You are directed to make the following changes from the plans and specifications or do the following described work not included in the plans and specifications for this contract. ***NOTE: This change order is not effective until approved by the Engineer.***

Description of work to be done, estimate of quantities and prices to be paid. (Segregate between additional work at contract price, agreed price and force account.) Unless otherwise stated, rates for rental of equipment cover only such time as equipment is actually used and no allowance will be made for idle time. This last percentage shown is the net accumulated increase or decrease from the original quantity in the Engineer's Estimate.

Extra Work at Lump Sum:

In lieu of placing column shear keys when column concrete is placed, block out column and install shear key at a later date. Details for this work are on sheet 3 of 3 of this CCO. Provide labor, equipment, and materials as necessary to perform this work. This CCO is for the westbound piers.

For this work, the contractor will be paid the sum of $139,000.00. This sum constitutes full compensation, including markups, for this change.

~~Estimated~~ Total cost of Extra Work at Lump Sum $139,000.00

Consideration of a time adjustment will be deferred until completion of the work specified herein. Determination of a commensurate time extension will be made in accordance with Section 10-1.14, "Progress Schedule (Critical Path Method)," of the Special Provisions and Section 8-1.07, "Liquidated Damages," of the Standard Specifications.

Estimated Cost: **Increase** ☑ **Decrease** ☐ **$139,000.00**

By reason of this order the time of completion will be adjusted as follows: Deferred

Submitted by

Signature	Resident Engineer BEN GHAFGHAZI	Date 5/7/08

Approval Recommended by

Signature	Construction Engineer Ben Ghafghazi	Date 5/7/08

Engineer Approval by

Signature	Construction Manager Amer Bata	Date 5/23/08

We the undersigned contractor, have given careful consideration to the change proposed and agree, if this proposal is approved, that we will provide all equipment, furnish the materials, except as may otherwise be noted above, and perform all services necessary for the work above specified, and will accept as full payment therefor the prices shown above.

NOTE: If you, the contractor, do not sign acceptance of this order, your attention is directed to the requirements of the specifications as to proceeding with the ordered work and filing a written protest within the time therein specified.

Contractor Acceptance by

Signature	(Print name and title) HARRY McGOVERN, GENERAL MANAGER	Date 5/19/08

DIST	COUNTY	ROUTE	KILOMETER POST TOTAL PROJECT	SHEET NO.	TOTAL SHEETS
04	Ala	80	1.6/2.7	179AS	643

REGISTERED ENGINEER - CIVIL

PLANS APPROVAL DATE

The State of California or its officers or agents shall not be responsible for the accuracy or completeness of electronic copies of this plan sheet.

REGISTERED PROFESSIONAL ENGINEER — VINH TRINH — No. 50695 — Exp. 09-30-09 — CIVIL — STATE OF CALIFORNIA

T.Y. LIN / MOFFATT & NICHOL
TWO HARRISON STREET, SUITE 500
SAN FRANCISCO, CA 94105

W. KOO & ASSOCIATES, INC
625 THE CITY DRIVE SOUTH, SUITE 200
ORANGE, CA 92868

To get to the Caltrans web site, go to: http://www.dot.ca.gov

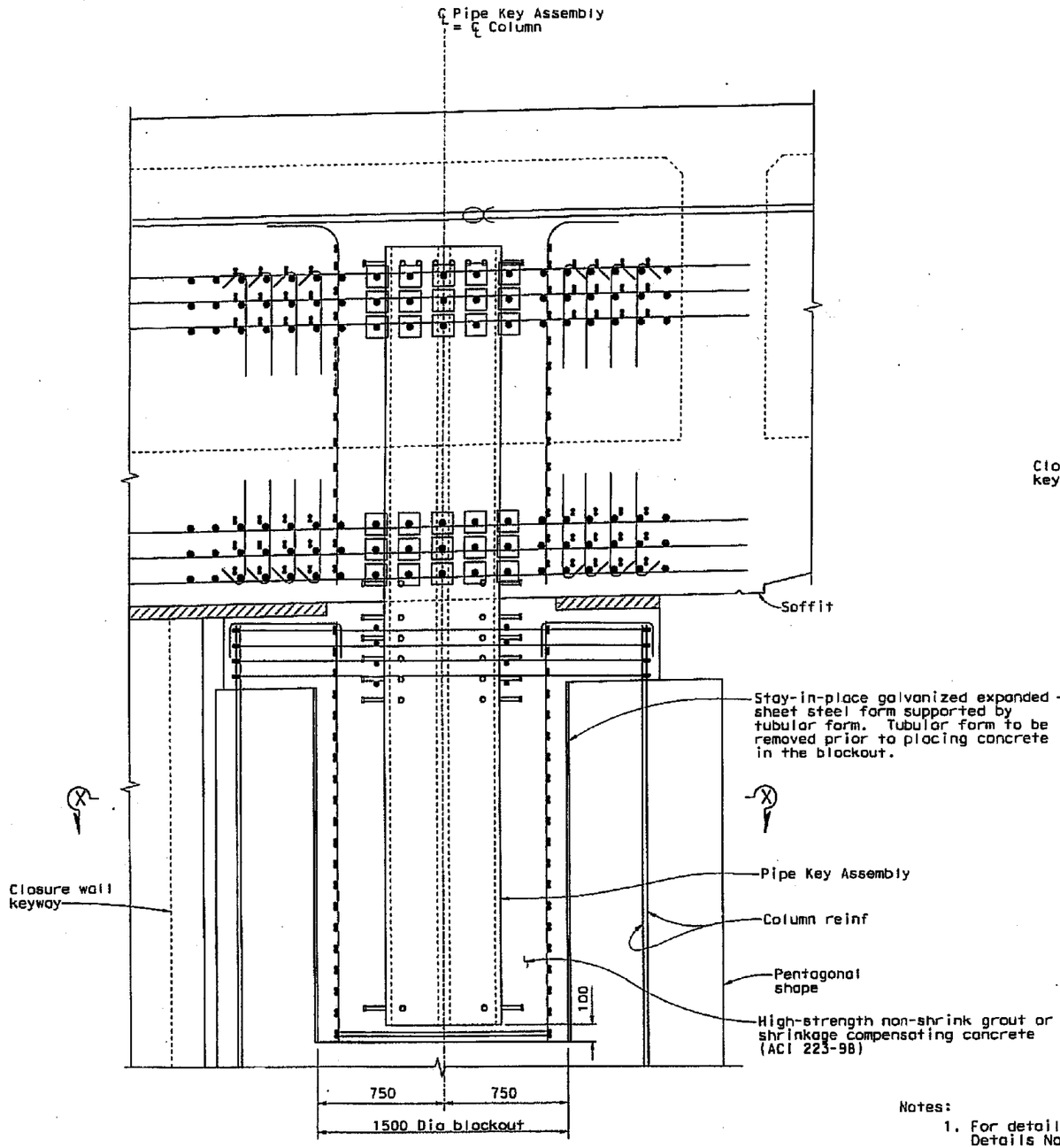

PIPE KEY BLOCKOUT (OPTIONAL)
1:15

LEGEND
Denotes bundled bars
Denotes headed bar

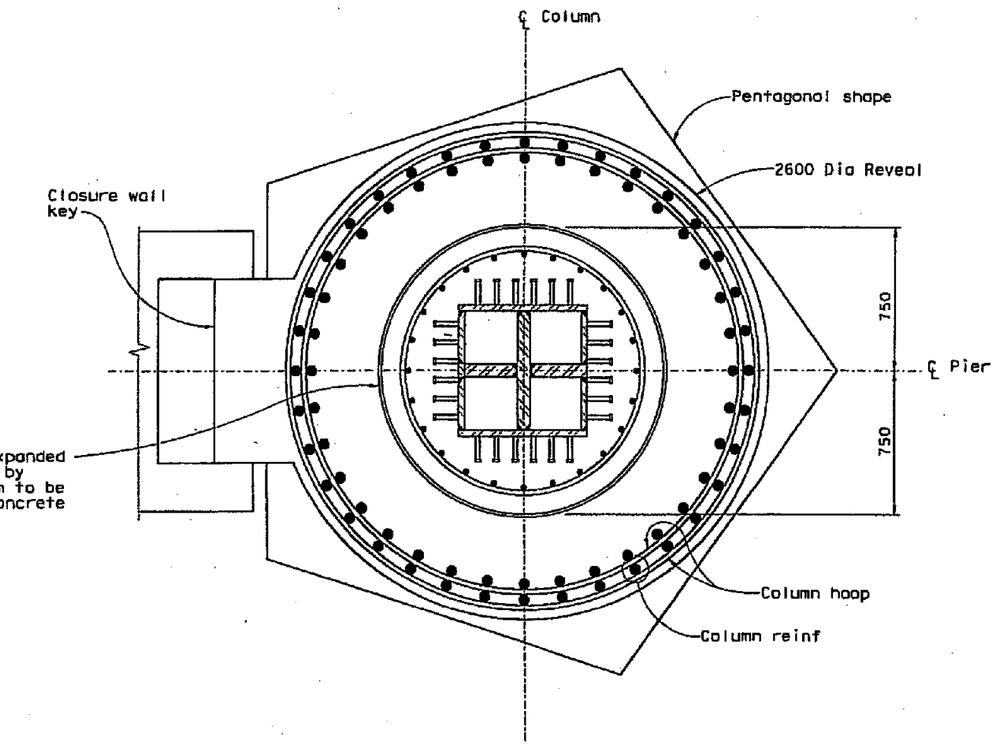

SECTION X-X
1:15

Notes:
1. For details not shown, see "Westbound Pier Details No. 11" Sheet.

SUPPLEMENTAL SHEET
CONTRACT CHANGE ORDER NO. 41
SHEET 3 OF 3

ALL DIMENSIONS ARE IN MILLIMETERS UNLESS OTHERWISE SHOWN

SAN FRANCISCO OAKLAND BAY BRIDGE
EAST SPAN SEISMIC SAFETY PROJECT

OAKLAND APPROACH STRUCTURES-PHASE 1

WESTBOUND PIER DETAILS NO. 11A

DESIGN OVERSIGHT — BERNARD CHAN — HASAN EL-HATUR — SIGN OFF DATE 4/9/08

Rev. Date 5-18-92

	BY	CHECKED
DESIGN	V. Trinh	Y. Shangkuan
DETAILS	N. Shu	Y. Shangkuan
QUANTITIES		

PREPARED FOR THE STATE OF CALIFORNIA DEPARTMENT OF TRANSPORTATION

Vinh Trinh — PROJECT ENGINEER

BRIDGE NO. 34-0006L/R
KILOMETER POST 1.6

CU 04
EA 0120L1

ORIGINAL SCALE IN MILLIMETERS FOR REDUCED PLANS 0 10 20 30 40 50 60 70 80 90 100

DISREGARD PRINTS BEARING EARLIER REVISION DATES

REVISION DATES (PRELIMINARY STAGE ONLY) — 5/18/92 10/26/93 5/20/94 10/26/94 2/21/95 5/24/95 11/17/95 1/31/96 2/21/96 4/9/96

SHEET 66AS OF 224

FILE => $REQUEST

USERNAME => $USER DATE PLOTTED => $DATE TIME PLOTTED => $TIME

T.Y.LIN INTERNATIONAL
MOFFATT & NICHOL

T.Y. Lin/Moffatt & Nichol Joint Venture
Two Harrison Street, Suite 500
San Francisco, CA 94105

REVISION MARKS ON CONTRACT PLAN CHANGES

SFOBB Oakland Approach Structures, Contract No. 04-0120L4

Revisions to the following plans were prepared under the supervision of the undersigned engineer.

Sheet 179AS/643 – WB Pier Details No. 11A

For the project in	SF/ALA	County
Route	80	
K Post Description	04-SF Ala-80, 1.6/2.7	
District/EA	0120L1	

(Signature)

Vinh Trinh
(Name)

Group Manager
(Title)

50685
(Registration No.)

09/30/2009
(Date of Expiration)

04/04/08
(Date)

P.E. Stamp / Company Name and Address

625 The City Drive South. Suite 200
Orange, CA 92868

REGISTERED PROFESSIONAL ENGINEER
VINH DIEU TRINH
NO. 50685
Exp. 9-30-09
CIVIL
STATE OF CALIFORNIA

Contract No. 04-0120L4
Page 2 of 3
CCO No. 41 Suppl. No. 0
Contractor MCM
Res. Engr. Ben Ghafghazi

DIST	COUNTY	ROUTE	KILOMETER POST TOTAL PROJECT	SHEET NO.	TOTAL SHEETS
04	Ala	80	1.6/2.7	179AS	643

REGISTERED ENGINEER - CIVIL

4/4/08

PLANS APPROVAL DATE

PROFESSIONAL ENGINEER — VINH TRINH — No. 50685 — Exp. 09-30-09 — CIVIL — STATE OF CALIFORNIA

The State of California or its officers or agents shall not be responsible for the accuracy or completeness of electronic copies of this plan sheet.

T.Y. LIN / MOFFATT & NICHOL
TWO HARRISON STREET, SUITE 500
SAN FRANCISCO, CA 94105

W. KOO & ASSOCIATES, INC
625 THE CITY DRIVE SOUTH, SUITE 200
ORANGE, CA 92868

To get to the Caltrans web site, go to: http://www.dot.ca.gov

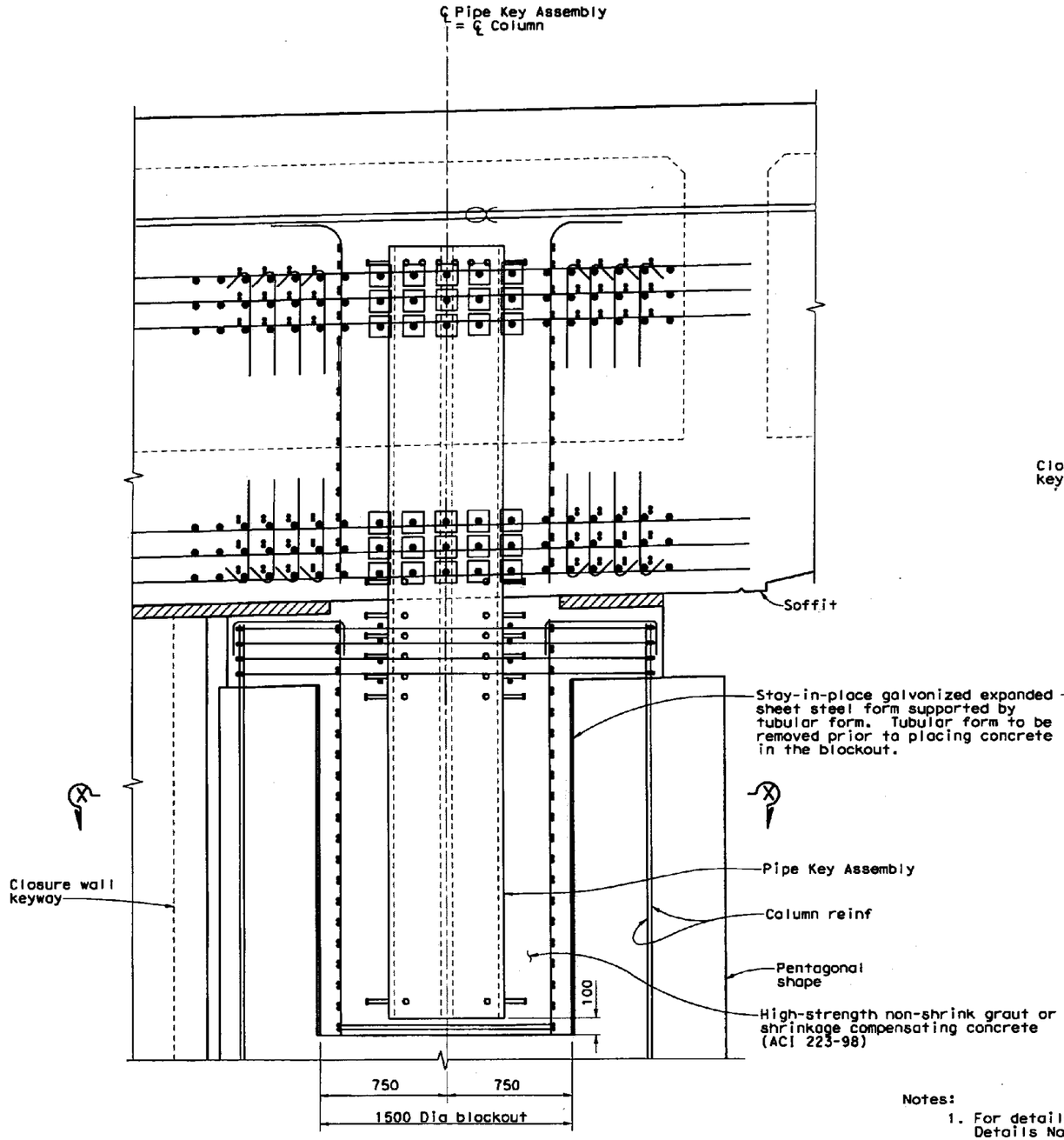

PIPE KEY BLOCKOUT (OPTIONAL)

1:15

LEGEND

Denotes bundled bars

Denotes headed bar

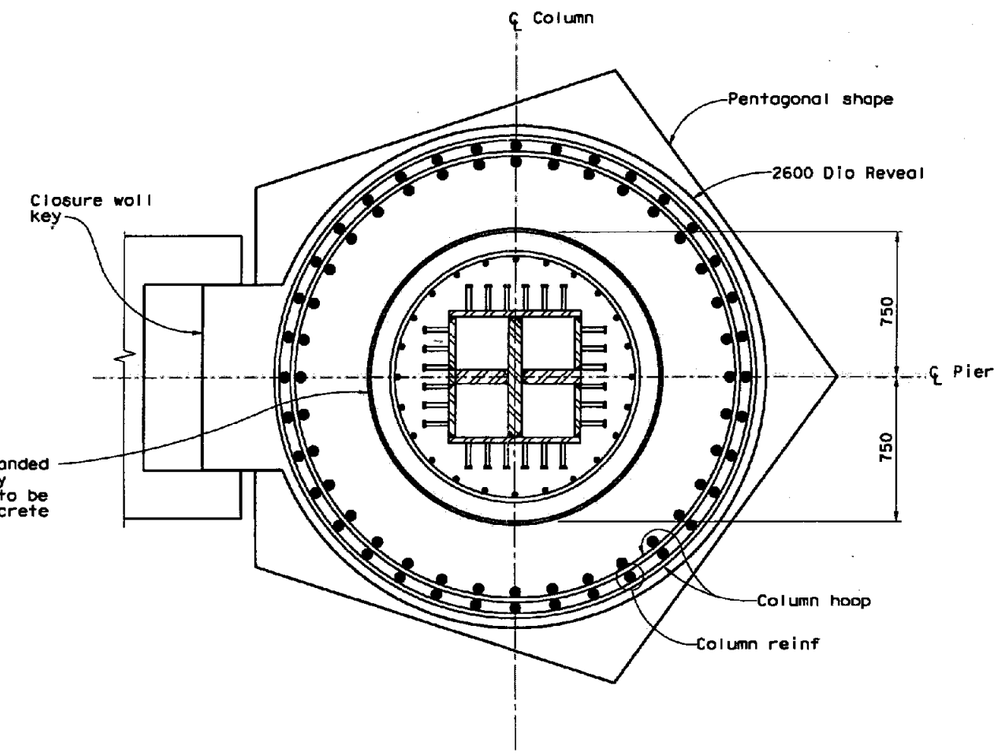

SECTION X-X

1:15

Notes:

1. For details not shown, see "Westbound Pier Details No. 11" Sheet.

SUPPLEMENTAL SHEET
CONTRACT CHANGE ORDER NO. 41
SHEET 3 OF 3 04-0120L4

ALL DIMENSIONS ARE IN MILLIMETERS UNLESS OTHERWISE SHOWN

SAN FRANCISCO OAKLAND BAY BRIDGE
EAST SPAN SEISMIC SAFETY PROJECT

OAKLAND APPROACH STRUCTURES-PHASE 1

WESTBOUND PIER DETAILS NO. 11A

DESIGN OVERSIGHT			
BERNARD CHAN	HASAN EL-HATUR		
SIGN OFF DATE			
DESIGN	BY V. Trinh	CHECKED Y. Shangkuan	
DETAILS	BY N. Shu	CHECKED Y. Shangkuan	
QUANTITIES	BY .	CHECKED .	

PREPARED FOR THE STATE OF CALIFORNIA DEPARTMENT OF TRANSPORTATION

Vinh Trinh
PROJECT ENGINEER

BRIDGE NO. 34-0006L/R
KILOMETER POST 1.6

CU 04
EA 0120L1

DISREGARD PRINTS BEARING EARLIER REVISION DATES

REVISION DATES (PRELIMINARY STAGE ONLY): 5/28/03 10/20/03 5/28/04 10/29/04 2/28/05 5/26/05 11/29/05 1/27/06 4/13/06 4/4/08

SHEET 66AS OF 224

Rev. Date: 5-18-99

ORIGINAL SCALE IN MILLIMETERS FOR REDUCED PLANS 0 10 20 30 40 50 60 70 80 90 100

FILE => ...\jepirlldet_CCO.dgn

USERNAME => $USER DATE PLOTTED => 6/19/2008 TIME PLOTTED => 1:50:21 PM

STATE OF CALIFORNIA - DEPARTMENT OF TRANSPORTATION

CONTRACT CHANGE ORDER MEMORANDUM

DATE: 3/18/2008 Page 1 of 1

TO: AMER BATA / BEN GHAFGHAZI

FROM: BEN GHAFGHAZI

FILE: E.A. 04 - 0120L4
CO-RTE-PM ALA-80-1.6/2.7
FED. NO. NO FED AID

CCO#: 41 | SUPPLEMENT#: 0 | Category Code: ~~CHXX~~ CHPR

CONTINGENCY BALANCE (incl. this change) **$15,051,914.70**

COST: **$139,000.00** INCREASE ☑ DECREASE ☐

HEADQUARTERS APPROVAL REQUIRED? ☐ YES ☑ NO

SUPPLEMENTAL FUNDS PROVIDED: **$0.00**

IS THIS REQUEST IN ACCORDANCE WITH ENVIRONMENTAL DOCUMENTS? ☑ YES ☐ NO

CCO DESCRIPTION:
Blockout for column shear key.

PROJECT DESCRIPTION:
Construct bridge, roadway, building and electrical system.

Original Contract Time:	Time Adj. This Change:	Previously Approved CCO Time Adjustments:	Percentage Time Adjusted: (including this change)	Total # of Unreconciled Deferred Time CCO(s): (including this change)
810 Day(s)	DEF Day(s)	0 Day(s)	0 %	3

THIS CHANGE ORDER PROVIDES FOR:
Providing a blockout for future installation of column shear key per modified plan sheet 179AS for all westbound piers as shown on sheet 3 of 3 of the CCO. A total of six piers will be modified.

This change is necessary because the steel supplier, ArcelorMittal USA, is not able to deliver steel for the pipe keys on schedule due to expedited orders from the US military. Military orders have priority over all others. The military order affected steel suppliers throughout the country. The Contractor was not able to find another source for the steel. To mitigate impacts to the piers, a blockout will be formed in the column and then the pipe shear key will be placed when the materials become available.

This work will be paid as Extra Work at Lump Sum of $139,000.00, which can be financed from the contingency fund. A detailed cost analysis is on file.

This change was discussed and concurred by Ade Akinsanya, Structures Design, and Jal N. Birdy, Project Engineer for Moffatt & Nichol.

Maintenance concurrence is not necessary as no new work is being added.

Adjustment of contract time is deferred pending completion of the work specified in this change as it may affect the controlling operation. Determination of a commensurate time extension will be made in accordance with Section 10-1.14, "Progress Schedule (Critical Path Method)," of the Special Provisions and Section 8-1.07, "Liquidated Damages," of the Standard Specifications.

CONCURRED BY:

Construction Engineer:	Ben Ghafghazi	Date 5/30/08
Bridge Engineer:	Mehran Ardakanian	Date 5/8/08
Project Engineer:		Date
Project Manager:		Date
FHWA Rep.:		Date
Environmental:		Date
Other (specify):	Jal Birdy, Moffat Nichol	Date 3/17/08
Other (specify):	Ade Akinsanya, Structures Design	Date 3/17/08
District Prior Approval By:		Date
HQ (Issue Approve) By:		Date
Resident Engineer's Signature:		Date 5/30/08

ESTIMATE OF COST

	THIS REQUEST	TOTAL TO DATE
ITEMS	$0.00	$0.00
FORCE ACCOUNT	$0.00	$0.00
AGREED PRICE	$139,000.00	$139,000.00
ADJUSTMENT	$0.00	$0.00
TOTAL	$139,000.00	$139,000.00

FEDERAL PARTICIPATION

☐ PARTICIPATING ☐ PARTICIPATING IN PART ☑ NONE
☐ NON-PARTICIPATING (MAINTENANCE) ☐ NON-PARTICIPATING

FEDERAL SEGREGATION (if more than one Funding Source or P.I.P. type)
☑ CCO FUNDED PER CONTRACT ☐ CCO FUNDED AS FOLLOWS

FEDERAL FUNDING SOURCE	PERCENT

ADA Notice: For individuals with sensory disabilities, this document is available in alternate formats. For information call: (916) 654-6410 or TDD (916) 654-3880 or write Records and Forms Management, 1120 N Street, MS-89, Sacramento, CA 95814.

STATE OF CALIFORNIA - DEPARTMENT OF TRANSPORTATION

CONTRACT CHANGE ORDER

Change Requested by: Engineer

CCO: 42	Suppl. No. 0	Contract No. 04 - 0120L4	Road ALA-80-1.6/2.7	FED. AID LOC.: NO FED AID

To: **M C M CONSTRUCTION INC**

You are directed to make the following changes from the plans and specifications or do the following described work not included in the plans and specifications for this contract. ***NOTE: This change order is not effective until approved by the Engineer.***

Description of work to be done, estimate of quantities and prices to be paid. (Segregate between additional work at contract price, agreed price and force account.) Unless otherwise stated, rates for rental of equipment cover only such time as equipment is actually used and no allowance will be made for idle time. This last percentage shown is the net accumulated increase or decrease from the original quantity in the Engineer's Estimate.

Extra Work at Unit Price:

Compensate the Contractor for toll fees for trucks transporting materials directly to and from the project site. This compensation shall only be for trucks hired by the Contractor from outside trucking firms to perform work specifically for this project.

Estimated extra work:

2,400 trips @ $12.38 per trip = $29,712.00

This price constitutes full compensation, including all markups, for the work of this change.

Estimated cost of Extra Work at Agreed Unit Price $29,712.00

Estimated Cost: Increase ☑ **Decrease** ☐ **$29,712.00**

By reason of this order the time of completion will be adjusted as follows: 0 days

Submitted by

Signature	Resident Engineer BEN GHAFGHAZI	Date 6/10/08

Approval Recommended by

Signature	Construction Engineer Ben Ghafghazi	Date 6/10/08

Engineer Approval by

Signature	Construction Engineer Ben Ghafghazi	Date 6/12/08

We the undersigned contractor, have given careful consideration to the change proposed and agree, if this proposal is approved, that we will provide all equipment, furnish the materials, except as may otherwise be noted above, and perform all services necessary for the work above specified, and will accept as full payment therefor the prices shown above.

NOTE: If you, the contractor, do not sign acceptance of this order, your attention is directed to the requirements of the specifications as to proceeding with the ordered work and filing a written protest within the time therein specified.

Contractor Acceptance by

Signature	(Print name and title) Edmundo A. Pucki Treasurer	Date 6-11-2008

STATE OF CALIFORNIA - DEPARTMENT OF TRANSPORTATION

CONTRACT CHANGE ORDER MEMORANDUM

DATE: 4/8/2008 Page 1 of 1

TO: AMER BATA / BEN GHAFGHAZI	FILE: E.A. 04 - 0120L4
FROM: BEN GHAFGHAZI	CO-RTE-PM ALA-80-1.6/2.7
	FED. NO. NO FED AID
CCO#: 42 SUPPLEMENT#: 0 Category Code: AXZZ	CONTINGENCY BALANCE (incl. this change) **$14,721,016.70**
COST: **$29,712.00** INCREASE ☑ DECREASE ☐	HEADQUARTERS APPROVAL REQUIRED? ☐ YES ☑ NO
SUPPLEMENTAL FUNDS PROVIDED: **$0.00**	IS THIS REQUEST IN ACCORDANCE WITH ENVIRONMENTAL DOCUMENTS? ☑ YES ☐ NO
CCO DESCRIPTION: Compensation for toll fees	**PROJECT DESCRIPTION:** Construct bridge, roadway, building and electrical system.

Original Contract Time:	Time Adj. This Change:	Previously Approved CCO Time Adjustments:	Percentage Time Adjusted: (including this change)	Total # of Unreconciled Deferred Time CCO(s): (including this change)
810 Day(s)	0 Day(s)	0 Day(s)	0 %	5

THIS CHANGE ORDER PROVIDES FOR:

Compensation to the Contractor for toll fees for trucks transporting materials directly to and from the project site. This compensation shall be for trucks hired by the Contractor from outside trucking firms to perform work on this project.

This change is necessary because Section 5-1.23, "Bridge Tolls," does not make a provision for trucks hired from outside companies by the Contractor to perform work specifically for this contract. This section allows the Contractor to obtain toll passes for vehicles marked with the Contractor's name. To obtain the passes Caltrans' Toll Captain requires the name of the driver, make, and license of the vehicle. Since hauling of materials is performed by an outside trucking firm the trucks and drivers are not the same for every shift and therefore the information Caltrans requires is not readily available. Toll passes are not issued without this information.

This work will be paid as extra work at unit price of $12.38 per truck for an estimated 2,400 trips for a total of $29,712.00. This work can be financed from the contingency fund.

Design and Maintenance concurrence is not necessary since this CCO is for administration purposed only.

CONCURRED BY:		
Construction Engineer:	Ben Ghafghazi	Date 6/10/08
Bridge Engineer:		Date
Project Engineer:		Date
Project Manager:		Date
FHWA Rep.:		Date
Environmental:		Date
Other (specify):		Date
Other (specify):		Date
District Prior Approval By:		Date
HQ (Issue Approve) By:		Date
Resident Engineer's Signature:		Date 6/10/08

ESTIMATE OF COST

	THIS REQUEST	TOTAL TO DATE
ITEMS	$0.00	$0.00
FORCE ACCOUNT	$0.00	$0.00
AGREED PRICE	$29,712.00	$29,712.00
ADJUSTMENT	$0.00	$0.00
TOTAL	$29,712.00	$29,712.00

FEDERAL PARTICIPATION

☐ PARTICIPATING ☐ PARTICIPATING IN PART ☑ NONE
☐ NON-PARTICIPATING (MAINTENANCE) ☐ NON-PARTICIPATING

FEDERAL SEGREGATION (if more than one Funding Source or P.I.P. type)
☑ CCO FUNDED PER CONTRACT ☐ CCO FUNDED AS FOLLOWS

FEDERAL FUNDING SOURCE	PERCENT

ADA Notice: For individuals with sensory disabilities, this document is available in alternate formats. For information call: (916) 654-6410 or TDD (916) 654-3880 or write Records and Forms Management, 1120 N Street, MS-89, Sacramento, CA 95814.

CONTRACT CHANGE ORDER

Change Requested by: Engineer

CCO 43	Suppl. No. 0	Contract No. 04 - 0120L4	Road ALA-80-1.6/2.7	FED. AID LOC.: NO FED AID

To: **M C M CONSTRUCTION INC**

You are directed to make the following changes from the plans and specifications or do the following described work not included in the plans and specifications for this contract. ***NOTE: This change order is not effective until approved by the Engineer.***

Description of work to be done, estimate of quantities and prices to be paid. (Segregate between additional work at contract price, agreed price and force account.) Unless otherwise stated, rates for rental of equipment cover only such time as equipment is actually used and no allowance will be made for idle time. This last percentage shown is the net accumulated increase or decrease from the original quantity in the Engineer's Estimate.

Extra Work at Force Account:

Revise louver and glass layout of the Mole Substation per revised plan sheet AA-6 on sheet 2 of 2 of this CCO. The layout shall be revised to match the layout given in Section BB on sheet AA-7 of the contract plans.

Estimated cost of Extra Work at Force Account $2,000.00

Estimated Cost: **Increase** ☑ **Decrease** ☐ **$2,000.00**

By reason of this order the time of completion will be adjusted as follows: 0 days

Submitted by		
Signature	**Resident Engineer** BEN GHAFGHAZI	**Date** 9/2/09
Approval Recommended by		
Signature	**Construction Engineer** Ben Ghafghazi	**Date** 9/2/09
Engineer Approved by		
Signature	**Construction Engineer** Ben Ghafghazi	**Date** 9/9/09

We the undersigned contractor, have given careful consideration to the change proposed and agree, if this proposal is approved, that we will provide all equipment, furnish the materials, except as may otherwise be noted above, and perform all services necessary for the work above specified, and will accept as full payment therefor the prices shown above.

NOTE: If you, the contractor, do not sign acceptance of this order, your attention is directed to the requirements of the specifications as to proceeding with the ordered work and filing a written protest within the time therein specified.

Contractor Acceptance By		
Signature Unilateral	**(Print name and title)**	**Date**

STATE OF CALIFORNIA-BUSINESS, TRANSPORTATION AND HOUSING AGENCY ARNOLD SCHWARZENEGGER, Governor

DEPARTMENT OF TRANSPORTATION - District 4 Toll Bridge Program
345 Burma Rd.
Oakland, CA 94607
(510) 286-0352, (510) 622-5165 fax

MCM CONSTRUCTION, INC.
6413 32ND STREET
NORTH HIGHLANDS, CA 95660

October 29, 2008

Contract No. 04-0120L4
04-Ala-80-1.6/2.7
Oakland Touchdown
SFOBB-ESSSP

Letter No. 05.03.01-001153

Attn: Mr. Greg Allen
Project Manager

Subject: Cost Estimate for CCO #43
MCM-TRN-000497

Dear Mr. Allen,

After reviewing the drawings and quote for CCO 43 - MCM letter dated 10-8-08 with attached sub quote from Statewide Construction dated 10-2-08, we cannot understand why the windows should cost more (from original $22,000 to "now" $36,000), since the drawing change shows them reduced in size. Also, we cannot understand why the Louvers are costing double (quote shows orig $4230 to "new" $8566), while the drawing change shows them enlarged by only 38% (original dimension = 2632, new is approx 3600).

The back up information you have provided with MCM-TRN-000497 for additional costs of doing the work of CCO #43 is not detailed enough to help us verify the increased costs. Please provide your calculations and justification for the increased costs and revise and resubmit your cost estimate so that we may be able to process CCO #43 as soon as possible.

Sincerely,

<<< ORIGINAL SIGNED >>>

Ben Ghafghazi
Resident Engineer

file: 05.03.01
49.043

MARK	DATE	DESCRIPTIONS	BY	CH'D	CCO#
4		MODIFIED LOUVER DIMENSIONS	RH	BN	##

REVISIONS

CONTRACT CHANGE ORDER NO. 43
SHEET 2 OF 2

REGISTERED PROFESSIONAL ENGINEER ROBERT BROOKS HOWELL No. C 8157 Exp. 11/30/09 Architectural STATE OF CALIFORNIA

Robert Brooks Howell

CALIFORNIA STATE FIRE MARSHAL
APPROVED

Approval of this plan does not authorize or approve any omission or deviation from applicable regulations. Final approval is subject to field inspection. One set of approved plans shall be available on the project site at all times.

Reviewed by: Roy Stetter 7-25-06

NOTES:

1. All concrete pours shall terminate at reveals.
2. All concrete pours shall extend to the full height of walls.
3. See drawing C-1 for exterior grading.

Caltrans Metric

DIST	COUNTY	ROUTE	KILOMETER POST TOTAL PROJECT	SHEET No	TOTAL SHEETS
04	Ala	80	1.6/2.7	607	643

Robert Brooks Howell 12/15/03
REGISTERED ARCHITECT

1-29-07
PLANS APPROVAL DATE

REGISTERED PROFESSIONAL ENGINEER ROBERT BROOKS HOWELL No. C 8157 Exp. 11/30/07 Architectural STATE OF CALIFORNIA

The State of California or its officers or agents shall not be responsible for the accuracy or completeness of electronic copies of this plan sheet.

Parsons Brinckerhoff Quade & Douglas, Inc.
303 Second Street, Suite 700N
San Francisco, CA 94107

To get to the Caltrans web site, go to: http://www.dot.ca.gov

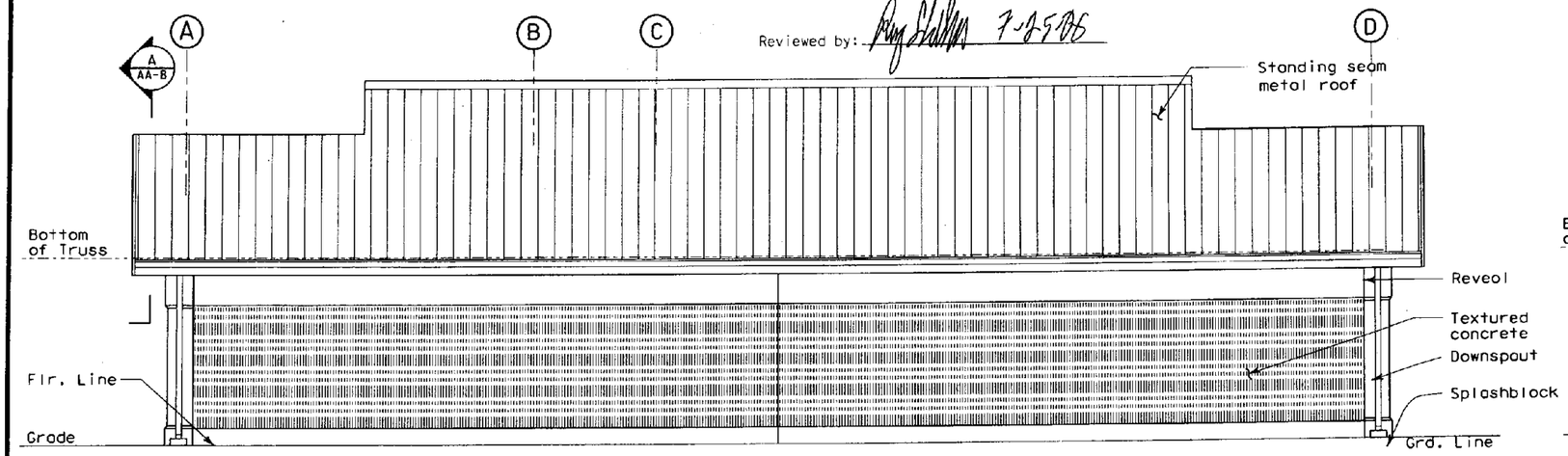

1 AA-3 **NORTH ELEVATION**
SCALE: 1:50

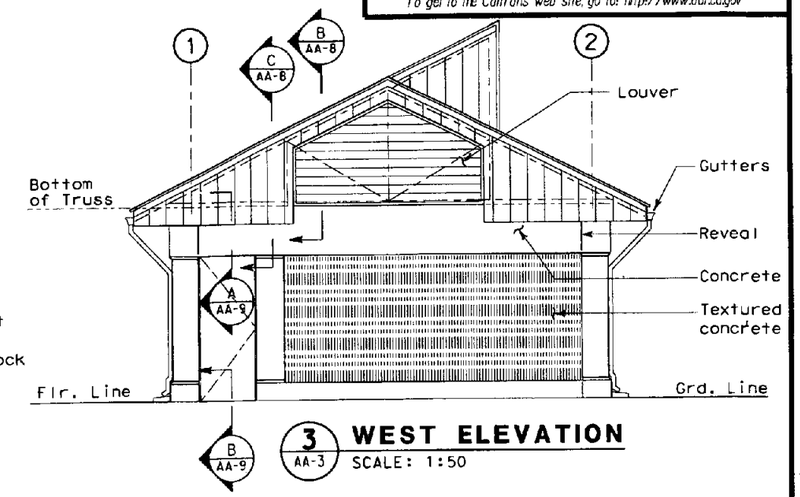

3 AA-3 **WEST ELEVATION**
SCALE: 1:50

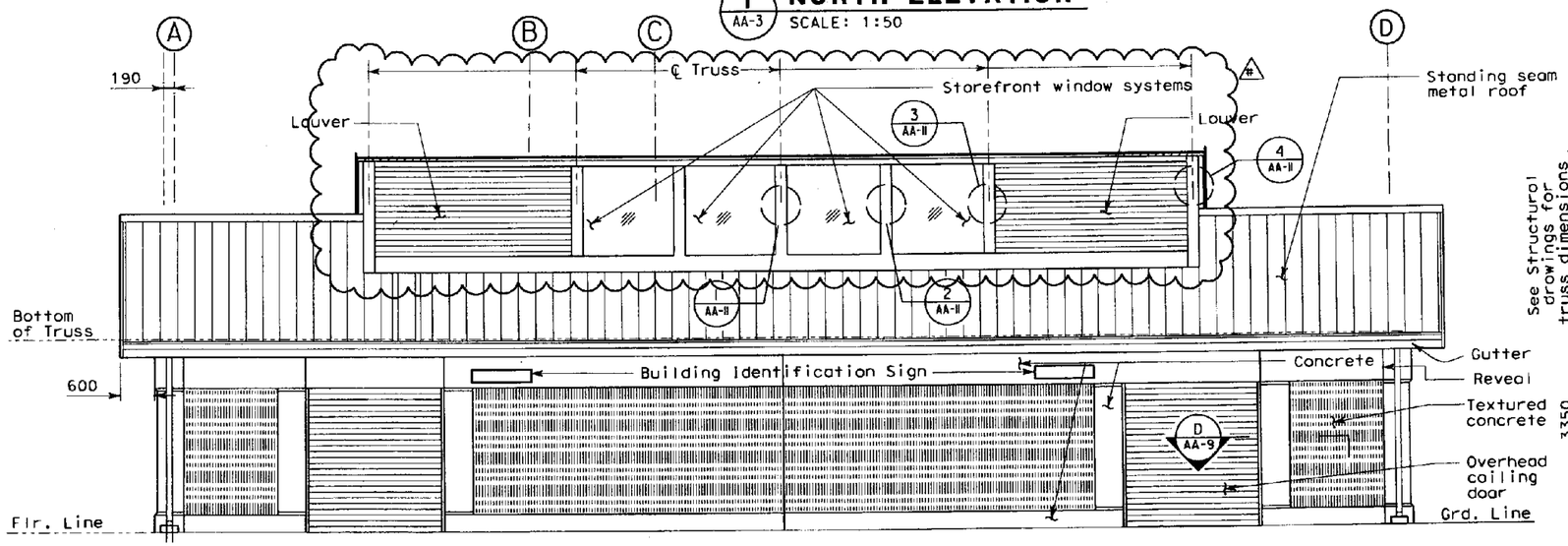

2 AA-3 **SOUTH ELEVATION**
SCALE: 1:50

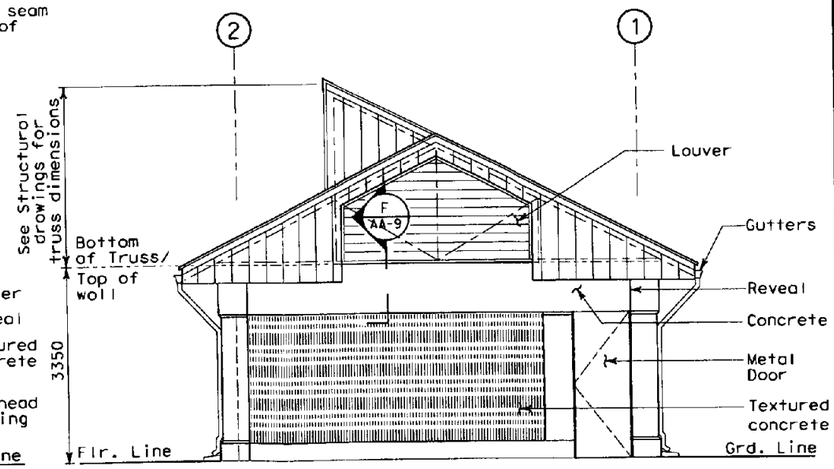

4 AA-3 **EAST ELEVATION**
SCALE: 1:50

ALL DIMENSIONS ARE IN MILLIMETERS UNLESS OTHERWISE SHOWN

Dave Stow, DESIGN OVERSIGHT	DESIGN	R. Howell	T. Advani
	DETAILS	L. Reyes	R. Howell
SIGN OFF DATE	QUANTITIES	P. Mcnamee	R. Howell

PREPARED FOR THE STATE OF CALIFORNIA DEPARTMENT OF TRANSPORTATION

Mark Grodzki, PROJECT ENGINEER

BRIDGE NO. 34-0006
KILOMETER POST

MOLE SUBSTATION ARCHITECTURAL ELEVATIONS

AA-6

SHEET OF

DESIGN DETAIL SHEET (METRIC) (REV. 3/1/98)

ORIGINAL SCALE IN MILLIMETERS FOR REDUCED PLANS 0 10 20 30 40 50 60 70 80 90 100

CU 04251
EA 0120L1

DISREGARD PRINTS BEARING EARLIER REVISION DATES

REVISION DATES (PRELIMINARY STAGE ONLY)

FILE => T:\13103\MS\pse\OTD-Contract 1\CCO\CCO - Mole Substation Dimensional Errors - MCM-RFI-000327R00\401201ab006C.dgn

USERNAME => reyesl DATE PLOTTED => 5/29/2008 TIME PLOTTED => 8:51:04 AM

STATE OF CALIFORNIA - DEPARTMENT OF TRANSPORTATION

CONTRACT CHANGE ORDER MEMORANDUM

DATE: 9/2/2009 Page 1 of 1

TO: AMER BATA / BEN GHAFGHAZI

FROM: BEN GHAFGHAZI

FILE: **E.A.** 04 - 0120L4
CO-RTE-PM ALA-80-1.6/2.7
FED. NO. NO FED AID

CCO#: **43** SUPPLEMENT#: **0** Category Code: **CAPD**

CONTINGENCY BALANCE (incl. this change) **$4,733,352.40**

COST: **$2,000.00** INCREASE ☑ DECREASE ☐

HEADQUARTERS APPROVAL REQUIRED? ☐ YES ☑ NO

SUPPLEMENTAL FUNDS PROVIDED: **$0.00**

IS THIS REQUEST IN ACCORDANCE WITH ENVIRONMENTAL DOCUMENTS? ☑ YES ☐ NO

CCO DESCRIPTION:
Substation plan revisions.

PROJECT DESCRIPTION:
Construct bridge, roadway, building and electrical system.

Original Contract Time:	Time Adj. This Change:	Previously Approved CCO Time Adjustments:	Percentage Time Adjusted: (including this change)	Total # of Unreconciled Deferred Time CCO(s): (including this change)
810 Day(s)	**0** Day(s)	**184** Day(s)	**23** %	**11**

THIS CHANGE ORDER PROVIDES FOR:

Changes to the louver and glass layout of the Mole Substation per revised plan sheet AA-6 as shown on sheet 2 of 2 of the CCO. The layout will be revised to match the layout shown on Section BB on sheet AA-7 of the contract plans.

The layout for louvers and glass on sheet AA-6 of the contract plans are incorrect. Per Design the louvers and glass are to be installed between the roof trusses of the substation. Section BB reflects this layout.

This change was discussed and concurred with Jaime Gutierrez of Project Development and Brady Nadell of Parsons Brinkerhoff. Maintenance concurrence is not necessary because this CCO does not add any new work.

This work will be paid as Extra Work at Force Account for $2,000.00, which can be financed from the contingency fund. This CCO is being processed unilaterally since the contractor does not agree to the cost (letter attached).

No adjustment of contract time is warranted as this change does not affect the controlling operation.

CONCURRED BY:

Construction Engineer:	Ben Ghafghazi	Date 9/2/09
Bridge Engineer:	Mehran Ardakanian	Date 9/8/09
Project Engineer:	Jaime Gutierrez	Date 4/14/08
Project Manager:		Date
FHWA Rep.:		Date
Environmental:		Date
Other (specify):	Brady Nadell, PB	Date 4/14/08
Other (specify):		Date
District Prior Approval By:		Date
HQ (Issue Approve) By:		Date
Resident Engineer's Signature:		Date 9/2/09

ESTIMATE OF COST

	THIS REQUEST	TOTAL TO DATE
ITEMS	$0.00	$0.00
FORCE ACCOUNT	$2,000.00	$2,000.00
AGREED PRICE	$0.00	$0.00
ADJUSTMENT	$0.00	$0.00
TOTAL	$2,000.00	$2,000.00

FEDERAL PARTICIPATION

☐ PARTICIPATING ☐ PARTICIPATING IN PART ☑ NONE
☐ NON-PARTICIPATING (MAINTENANCE) ☐ NON-PARTICIPATING

FEDERAL SEGREGATION (if more than one Funding Source or P.I.P. type)
☑ CCO FUNDED PER CONTRACT ☐ CCO FUNDED AS FOLLOWS

FEDERAL FUNDING SOURCE	PERCENT

ADA Notice: For individuals with sensory disabilities, this document is available in alternate formats. For information call: (916) 654-6410 or TDD (916) 654-3880 or write Records and Forms Management, 1120 N Street, MS-89, Sacramento, CA 95814.

CONTRACT CHANGE ORDER

Change Requested by: Engineer

CCO 44	Suppl. No. 0	Contract No. 04 - 0120L4	Road ALA-80-1.6/2.7	FED. AID LOC.: NO FED AID

To: **M C M CONSTRUCTION INC**

You are directed to make the following changes from the plans and specifications or do the following described work not included in the plans and specifications for this contract. ***NOTE: This change order is not effective until approved by the Engineer.***

Description of work to be done, estimate of quantities and prices to be paid. (Segregate between additional work at contract price, agreed price and force account.) Unless otherwise stated, rates for rental of equipment cover only such time as equipment is actually used and no allowance will be made for idle time. This last percentage shown is the net accumulated increase or decrease from the original quantity in the Engineer's Estimate.

Provide daily Environmental Quality Status Report and Safety Quality Status Reports.

Extra Work at Force Account:

Provide joint safety and environmental training to Contractor and Caltrans staff in addition to any training the required by the contract as determined necessary by the Engineer.

Estimated cost of Extra Work at Force Account $50,000.00

Extra Work at Unit Price:

In addition to environmental and safety requirements of the contract, the Contractor shall provide a daily Environmental Quality Status Report and Safety Quality Status Report. The reports shall be provided by a full time Environmental and Safety Quality Control Manager (ESQCM).

ESQCM shall have qualifications listed below:

1) Environmental Quality Control :

Shall have knowledge and experience in area of storm water protection measures and be up to date on all Caltrans and resource agency policies and procedures. The ESQCM shall continuously review the construction work plan, actual work, and contract required environmental protection measures, and submit daily status reports to the Engineer through the contractor's onsite construction manager as to the status of the contract required environmental protection measures.

Environmental reports shall include:

Documentation of daily work activity.
Documentation of environmental/SWPPP related field activities.
Documentation of environmental/SWPPP deficiencies and corrective actions taken.
Documentation of meetings, conversations, and other communications related to environmental/SWPPP issues.

2) Safety Quality Control:

Shall have knowledge in the area of safety procedures for all types of work being performed on this contract. Shall be up to date on Caltrans, Cal OSHA, OSHA and other safety agency requirements. The ESQCM shall continuously review the construction work plan and actual work, and submit daily status reports to the Engineer through the contractor's onsite construction manager on all activities underway to document safety conditions, and if necessary measures being taken to improve safety. The ESQCM shall respond to OSHA reports that are submitted to the State as part of the OSHA/Caltrans Partnership.

Safety reports shall include:

Documentation of daily work activity.
Documentation of safety related field activities.
Documentation of safety deficiencies and corrective actions taken.
Documentation of meetings, conversations, and other communications related to safety issues.

All reports shall include name of individual preparing report, date, and weather conditions.

CONTRACT CHANGE ORDER

Change Requested by: Engineer

CCO 44	Suppl. No. 0	Contract No. 04 - 0120L4	Road ALA-80-1.6/2.7	FED. AID LOC.: NO FED AID

For this work the Contractor shall be paid $17,250.00 per month for approximately 18 months. This price constitutes full compensation, including all markups, for the work of this change.

Estimated total cost $310,500.00

This Change Order does not relieve the Contractor of his responsibility to comply with all safety and SWPPP requirements of the contract.

The Contractor shall provide resumes/qualifications for ESQCM for review and approval by the Engineer.

The Contractor shall terminate and/or replace the ESQCM upon 2 weeks written notice from the Engineer.

The Contractor may terminate and/or replace the ESQCM upon 2 weeks written notice to the Engineer.

Estimated Cost: Increase ☑ **Decrease** ☐ **$360,500.00**

By reason of this order the time of completion will be adjusted as follows: 0 days

Submitted by

Signature	Resident Engineer BEN GHAFGHAZI	Date 8/19/08

Approval Recommended by

Signature	Construction Manager Amer Bata	Date 8/19/08

Engineer Approval by

Signature	Construction Manager Amer Bata	Date 8/19/08

We the undersigned contractor, have given careful consideration to the change proposed and agree, if this proposal is approved, that we will provide all equipment, furnish the materials, except as may otherwise be noted above, and perform all services necessary for the work above specified, and will accept as full payment therefor the prices shown above.

NOTE: If you, the contractor, do not sign acceptance of this order, your attention is directed to the requirements of the specifications as to proceeding with the ordered work and filing a written protest within the time therein specified.

Contractor Acceptance by

Signature	(Print name and title) Edmundo A. Ruchi	Date 8/19/08

STATE OF CALIFORNIA - DEPARTMENT OF TRANSPORTATION

CONTRACT CHANGE ORDER MEMORANDUM

TO: AMER BATA / BEN GHAFGHAZI	FILE: E.A. 04 - 0120L4
FROM: BEN GHAFGHAZI	CO-RTE-PM ALA-80-1.6/2.7
	FED. NO. NO FED AID
CCO#: 44 SUPPLEMENT#: 0 Category Code: CXXX	CONTINGENCY BALANCE (incl. this change) $14,723,728.70
COST: $360,500.00 INCREASE ☑ DECREASE ☐	HEADQUARTERS APPROVAL REQUIRED? ☑ YES ☐ NO
SUPPLEMENTAL FUNDS PROVIDED: $0.00	IS THIS REQUEST IN ACCORDANCE WITH ENVIRONMENTAL DOCUMENTS? ☑ YES ☐ NO
CCO DESCRIPTION: Provide environmental and safety reports	**PROJECT DESCRIPTION:** Construct bridge, roadway, building and electrical system.

Original Contract Time:	Time Adj. This Change:	Previously Approved CCO Time Adjustments:	Percentage Time Adjusted: (including this change)	Total # of Unreconciled Deferred Time CCO(s): (including this change)
810 Day(s)	0 Day(s)	0 Day(s)	0 %	5

THIS CHANGE ORDER PROVIDES FOR:

Providing daily Safety Status Report and Environmental Status Report and providing environmental and safety training above and beyond contract requirements.

This change is necessary to provide full time monitoring and reporting of this contract's environmental and safety programs. This contract is a part of the SFOBB East Span Replacement project. The contract also involves work within San Francisco Bay. This contract is highly visible to the public and outside agencies. Cal OSHA makes regular inspections of the project. This change is to enhance Caltrans' monitoring of environmental and safety issues. The reports shall be produced by the Contractor. The Contractor will appoint an Environmental and Safety Quality Control Manager (ESQCM) to produce the reports. The ESQCM shall meet the qualifications shown in the CCO.

Additional joint training for Caltrans' and Contractor's staff will be provided, when determined necessary by the State, as an assurance that sensitive environmental or safety issues are fully understood by all personnel on the project.

The work associated with the status reports will be paid as extra work at an agreed unit price of $17,250.00 per month for 18 months for a total of $310,500.00. A detailed cost analysis is on file. The additional training will be paid as extra work at force account for an estimated cost of $50,000.00, which can be financed from the contingency fund.

This change has been requested by Brian Maroney, Toll Bridge Design Chief. This change has been discussed and concurred with Dennis Turchon, Principal Transportation Engineer, Patrick Treacy, Headquarters Construction Coordinator, and Ken Terpstra, Project Manager. Issue and approve was granted by Headquarters on June 26, 2008. Maintenance concurrence is not required as this work is for contract administration only.

No adjustment of the contract time is warranted, as this change does not affect the controlling operation.

CONCURRED BY:

Construction Engineer:	Ben Ghafghazi	Date 6/26/08
Bridge Engineer:		Date
Project Engineer:		Date
Project Manager:	Ken Terprstra	Date 6/16/08
FHWA Rep.:		Date
Environmental:		Date
Other (specify):	Brian Maroney, Chief, Toll Design	Date 4/15/08
Other (specify):		Date
District Prior Approval By:	Dennis Turchon, Principal TE	Date 6/16/08
HQ (Issue Approve) By:	Ken Darby	Date 6/26/08
Resident Engineer's Signature:		Date 6/26/08

ESTIMATE OF COST

	THIS REQUEST	TOTAL TO DATE
ITEMS	$0.00	$0.00
FORCE ACCOUNT	$50,000.00	$50,000.00
AGREED PRICE	$310,500.00	$310,500.00
ADJUSTMENT	$0.00	$0.00
TOTAL	$360,500.00	$360,500.00

FEDERAL PARTICIPATION

☐ PARTICIPATING ☐ PARTICIPATING IN PART ☑ NONE
☐ NON-PARTICIPATING (MAINTENANCE) ☐ NON-PARTICIPATING

FEDERAL SEGREGATION (if more than one Funding Source or P.I.P. type)
☑ CCO FUNDED PER CONTRACT ☐ CCO FUNDED AS FOLLOWS

FEDERAL FUNDING SOURCE	PERCENT

ADA Notice: For individuals with sensory disabilities, this document is available in alternate formats. For information call: (916) 654-6410 or TDD (916) 654-3880 or write Records and Forms Management, 1120 N Street, MS-89, Sacramento, CA 95814.

CONTRACT CHANGE ORDER

Change Requested by: Engineer

CCO 45	Suppl. No. 0	Contract No. 04 - 0120L4	Road ALA-80-1.6/2.7	FED. AID LOC.: NO FED AID

To: **M C M CONSTRUCTION INC**

You are directed to make the following changes from the plans and specifications or do the following described work not included in the plans and specifications for this contract. ***NOTE: This change order is not effective until approved by the Engineer.***

Description of work to be done, estimate of quantities and prices to be paid. (Segregate between additional work at contract price, agreed price and force account.) Unless otherwise stated, rates for rental of equipment cover only such time as equipment is actually used and no allowance will be made for idle time. This last percentage shown is the net accumulated increase or decrease from the original quantity in the Engineer's Estimate.

Modify footing and pedestal dimensions at E17R and E18R as shown on sheets 3 of 4 and 4 of 4 of this CCO as follows:

1. Revise the footing thickness for Pier E18R, shown in the table for the Eastbound structure on sheet 187 of 643 as Dimension "B", from 4,000 mm to 3,500 mm.

2. Revise the pedestal heights for Piers E17R and E18R, shown in the table for the Eastbound structure on sheet 187 of 643 as Dimension "A", from 5,000 mm to 5,500 mm.

3. Revise the dimension for Piers E17R and E18R, shown on the Pedestal Elevation on sheet 197 of 643 from 4,750 mm to 5,250 mm.

Estimate of Increase in Contract Item at Contract Price:

Item No. 103: STRUCTURAL CONCRETE BRIDGE LOCATION B

55.3 M3 (+0.43%) $2,465.00 /M3 = +$136,314.50 (+0.43%)

Estimated total cost for Increase in Contract Item.....$136,314.50

Estimate of Decrease in Contract Item at Contract Price:

Item No. 101: STRUCTURAL CONCRETE BRIDGE FOOTING

-131.2 M3 (–1.99%) $450.00 /M3 = –$59,040.00 (–1.99%)

Estimated total cost for Decrease in Contract Item.....($59,040.00)

The quantities shown herein for Item(s) #101, Structural Concrete, Bridge Footing, Location B (Bay), and #103, Structural Concrete, Bridge, Location B (Bay), when combined with the quantities specified in the Engineer's Estimate, and as modified by any previous change orders, shall be the final quantity for which payment will be made.

Adjustment of Compensation at Lump Sum:

Provide and install additional reinforcement at Piers E17R and E18R as shown on sheets 3 of 4 and 4 of 4 of this CCO. For this work, the contractor will be paid the sum of $53,470.36. This sum constitutes full compensation, including markups, for this change.

Adjustment of Compensation at Agreed Lump Sum $53,470.36

CONTRACT CHANGE ORDER

Change Requested by: Engineer

CCO 45	Suppl. No. 0	Contract No. 04 - 0120L4	Road ALA-80-1.6/2.7	FED. AID LOC.: NO FED AID

Estimated Cost: **Increase** ☑ **Decrease** ☐ **$130,744.86**

By reason of this order the time of completion will be adjusted as follows: 0 days

Submitted by

Signature	Resident Engineer BEN GHAFGHAZI	Date 8/19/08

Approval Recommended by

Signature	Construction Engineer Ben Ghafghazi	Date 8/19/08

Engineer Approval by

Signature	Construction Manager Amer Bata	Date 8/12/08

We the undersigned contractor, have given careful consideration to the change proposed and agree, if this proposal is approved, that we will provide all equipment, furnish the materials, except as may otherwise be noted above, and perform all services necessary for the work above specified, and will accept as full payment therefor the prices shown above.

NOTE: If you, the contractor, do not sign acceptance of this order, your attention is directed to the requirements of the specifications as to proceeding with the ordered work and filing a written protest within the time therein specified.

Contractor Acceptance by

Signature	(Print name and title) Edmundo Arluchi, Treasurer	Date 8-19-2008

DIST.	COUNTY	ROUTE	KILOMETER POST TOTAL PROJECT	SHEET NO.	TOTAL SHEETS
04	Ala	80	1.6/2.7	187R1	643

Caltrans Metric

REGISTERED ENGINEER - CIVIL

1-29-07

PLANS APPROVAL DATE

REGISTERED PROFESSIONAL ENGINEER MOHAN S. CHAR No. C057894 Exp. 6/30/08 CIVIL STATE OF CALIFORNIA

The State of California or its officers or agents shall not be responsible for the accuracy or completeness of electronic copies of this plan sheet.

T.Y. LIN / MOFFATT & NICHOL
TWO HARRISON STREET, SUITE 500
SAN FRANCISCO, CA 94105

LIM & NASCIMENTO ENGINEERING CORPORATION
12 MAUCHLY, BLDG L
IRVINE, CA 92618

To get to the Caltrans web site, go to: http://www.dot.ca.gov

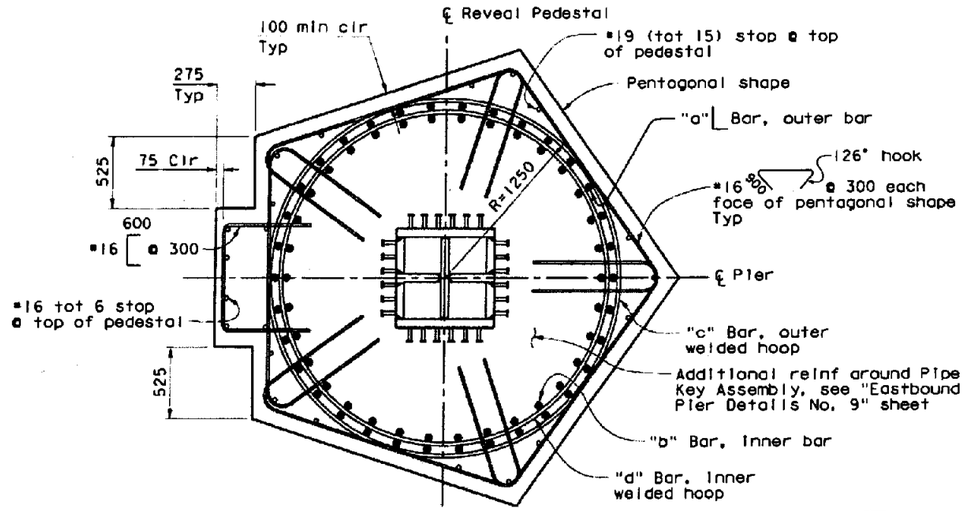

SECTION A-A

No Scale

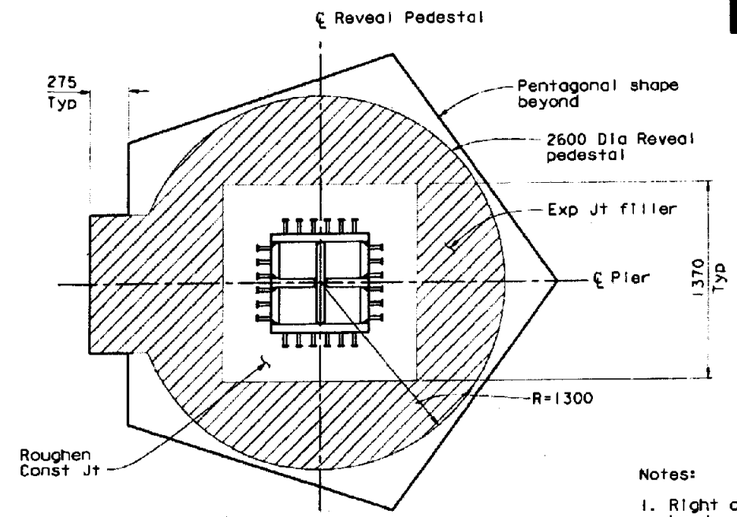

SECTION C-C

No Scale

STAMP IS VALID FOR REVISION 1 ONLY

MARK	DATE	DESCRIPTIONS	BY	CH'D
1	8/10/07	REVISED PEDESTAL DEPTH AT PIER E17R & PIER E18R	MA	MSC

REVISIONS

CONTRACT CHANGE ORDER NO. 45
SHEET 3 OF 4 04-0120L4

Notes:

1. Right column shown. Left column similar but opposite hand.
2. For pentagonal shape & dimension of columns, see "Eastbound Pier Details No. 3" sheet.
3. Column reinforcement shall be equally & symmetrically spaced.
4. Closure wall not shown for clarity see "Eastbound Pier Details No. 3" sheet.
5. No. of rebars shown on sections for illustration only. See "Column Reinforcement Schedule" for total No. at each Column.
6. All the reinforcement in the columns shall be purple epoxy coated reinforcement.
7. All welded hoops shall be ultimate butt spliced.

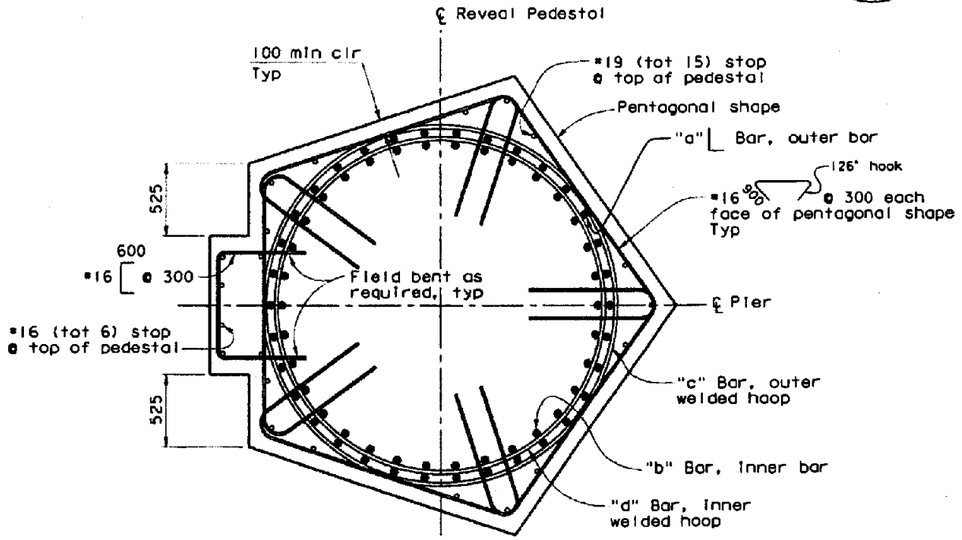

SECTION B-B

No Scale

COLUMN REINFORCEMENT SCHEDULE

Location	Dimensions "A"	Dimensions "B"	Reinforcement/each col "a" Bar	Reinforcement/each col "b" Bar	Welded hoop/each col "c" Bar	Welded hoop/each col "d" Bar
Pier E17R	5500	3500	36 - #57	36 - #57	#25 @ 100	#25 @ 100
Pier E18R	5500	3500	36 - #57	36 - #57	#25 @ 100	#25 @ 100
Pier E19R	—	—	36 - #57	36 - #57	#25 @ 100	#25 @ 100
Pier E20R	—	—	36 - #57	36 - #57	#25 @ 100	#25 @ 100
Pier E21R	—	—	36 - #57	36 - #57	#25 @ 100	#25 @ 100
Pier E22R	—	—	36 - #57	36 - #57	#25 @ 100	#25 @ 100

ALL DIMENSIONS ARE IN MILLIMETERS UNLESS OTHERWISE SHOWN

SAN FRANCISCO OAKLAND BAY BRIDGE
EAST SPAN SEISMIC SAFETY PROJECT

OAKLAND APPROACH STRUCTURES - PHASE I

EASTBOUND PIER DETAILS NO. 2

DESIGN OVERSIGHT
SAM AKKAD FRANCISCO CARPIO BERNARD CHAN HASAN EL-MATUR
SIGN OFF DATE

	BY	CHECKED
DESIGN	M. CHAR	T. DUDLEY
DETAILS	N. MORCILLO/M. ANDRASEK	M. CHAR
QUANTITIES	N. MORCILLO/Y. KIM	V. SIVAKOLUNDU/T. DUDLEY

PREPARED FOR THE STATE OF CALIFORNIA DEPARTMENT OF TRANSPORTATION

MOHAN S. CHAR
PROJECT ENGINEER

BRIDGE NO. 34-0006L/R
KILOMETER POST 1.6

CU 04
EA 0120L1

DISREGARD PRINTS BEARING EARLIER REVISION DATES

Rev. Date: 3-18-98

ORIGINAL SCALE IN MILLIMETERS FOR REDUCED PLANS 0 10 20 30 40 50 60 70 80 90 100

DIST.	COUNTY	ROUTE	KILOMETER POST TOTAL PROJECT	SHEET NO.	TOTAL SHEETS
04	Ala	80	1.6/2.7	197R1	643

REGISTERED ENGINEER - CIVIL

1-29-07

PLANS APPROVAL DATE

The State of California or its officers or agents shall not be responsible for the accuracy or completeness of electronic copies of this plan sheet.

REGISTERED PROFESSIONAL ENGINEER MOHAN S. CHAR No. C057894 Exp. 6/30/08 CIVIL STATE OF CALIFORNIA

T.Y. LIN / MOFFATT & NICHOL
TWO HARRISON STREET, SUITE 500
SAN FRANCISCO, CA 94105

LIM & NASCIMENTO ENGINEERING CORPORATION
12 MAUCHLY, BLDG L
IRVINE, CA 92618

To get to the Caltrans web site, go to: http://www.dot.ca.gov

REGISTERED PROFESSIONAL ENGINEER MOHAN S. CHAR No. C057894 Exp. 6/30/10 CIVIL STATE OF CALIFORNIA

STAMP IS VALID FOR REVISION 1 ONLY

MARK	DATE	DESCRIPTIONS	BY	CH'D
1	8/10/07	REVISED PEDESTAL DEPTH AT PIER E17R & PIER E18R	MA	MSC

REVISIONS

CONTRACT CHANGE ORDER NO. 45
SHEET 4 OF 4 04-0120L4

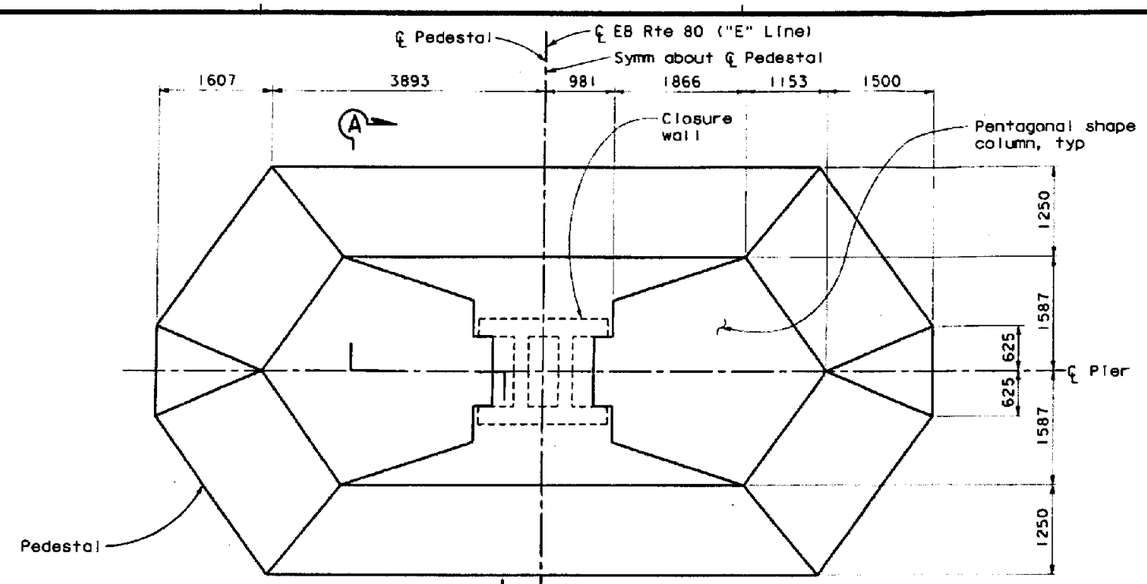

PLAN

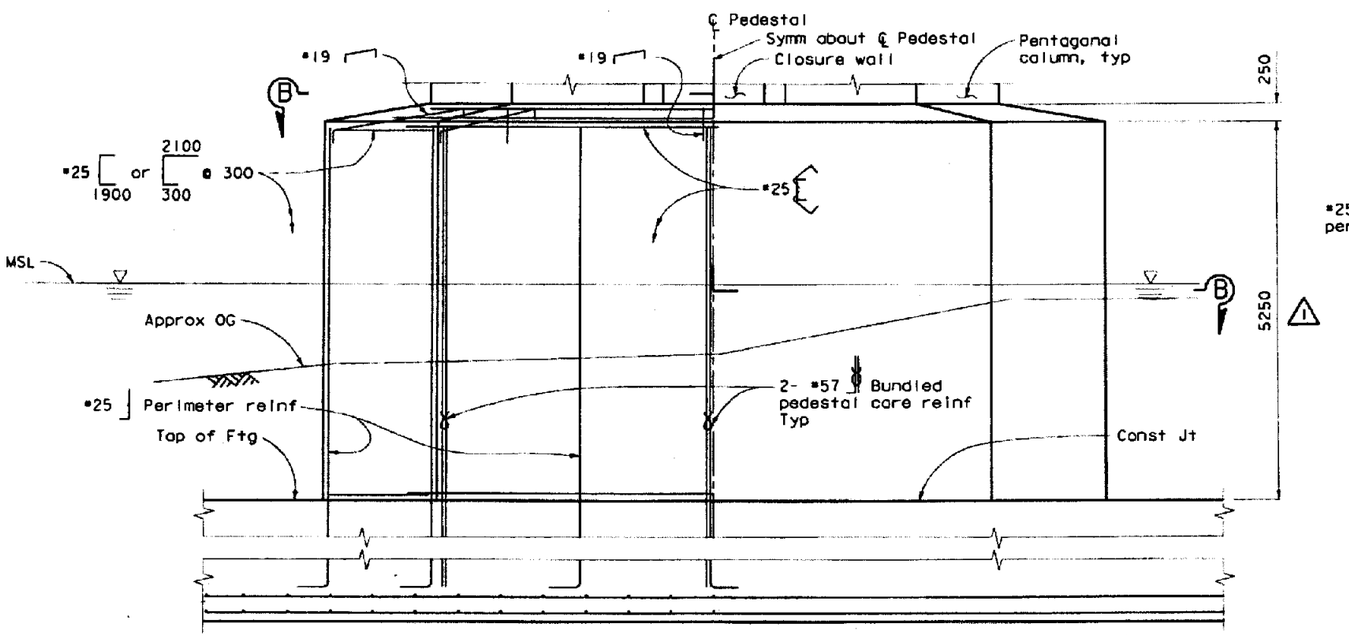

ELEVATION

PEDESTAL - PIERS E17R AND E18R

1:40

Notes:

1. Column & footing reinforcement and piles not shown for clarity.
2. For "Section B-B" see "Eastbound Pier Details No. 13" sheet.

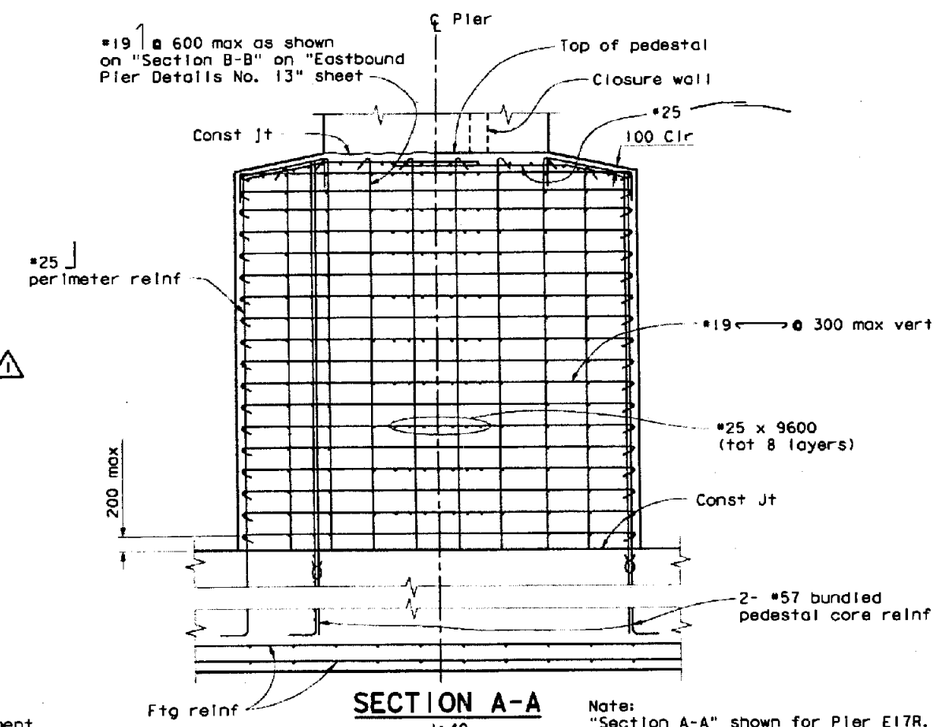

SECTION A-A

1:40

Note:
"Section A-A" shown for Pier E17R. Pier E18R similar.

ALL DIMENSIONS ARE IN MILLIMETERS UNLESS OTHERWISE SHOWN

SAN FRANCISCO OAKLAND BAY BRIDGE
EAST SPAN SEISMIC SAFETY PROJECT

OAKLAND APPROACH STRUCTURES - PHASE I

EASTBOUND PIER DETAILS NO. 12

DESIGN OVERSIGHT: SAM AKRAD, FRANCISCO CARPIO, BERNARD CHAN, HASAN EL-HATUR

SIGN OFF DATE

Rev. Date: 5-18-98

	BY	CHECKED
DESIGN	M. CHAR	T. DUDLEY
DETAILS	N. MORCILLO/M. ANDRASEK	M. CHAR
QUANTITIES	N. MORCILLO/Y. KIM	V. SIVAKOLUNDU/T. DUDLEY

PREPARED FOR THE STATE OF CALIFORNIA DEPARTMENT OF TRANSPORTATION

MOHAN S. CHAR
PROJECT ENGINEER

BRIDGE NO. 34-0006L/R
KILOMETER POST 1.6

CU 04
EA 0120L1

DISREGARD PRINTS BEARING EARLIER REVISION DATES

ORIGINAL SCALE IN MILLIMETERS FOR REDUCED PLANS 0 10 20 30 40 50 60 70 80 90 100

SHEET 84R1 224

STATE OF CALIFORNIA - DEPARTMENT OF TRANSPORTATION

CONTRACT CHANGE ORDER MEMORANDUM

TO: AMER BATA / BEN GHAFGHAZI	FILE: **E.A.** 04 - 0120L4
FROM: BEN GHAFGHAZI	**CO-RTE-PM** ALA-80-1.6/2.7
	FED. NO. NO FED AID
CCO#: **45** SUPPLEMENT#: **0** Category Code: **CHPG**	CONTINGENCY BALANCE (incl. this change) **$14,492,620.20**
COST: **$130,744.86** INCREASE ☑ DECREASE ☐	HEADQUARTERS APPROVAL REQUIRED? ☐ YES ☑ NO
SUPPLEMENTAL FUNDS PROVIDED: **$0.00**	IS THIS REQUEST IN ACCORDANCE WITH ENVIRONMENTAL DOCUMENTS? ☑ YES ☐ NO
CCO DESCRIPTION: Revise 17R and 18R dimensions	**PROJECT DESCRIPTION:** Construct bridge, roadway, building and electrical system.

Original Contract Time:	Time Adj. This Change:	Previously Approved CCO Time Adjustments:	Percentage Time Adjusted: (including this change)	Total # of Unreconciled Deferred Time CCO(s): (including this change)
810 Day(s)	**0** Day(s)	**0** Day(s)	**0** %	**5**

THIS CHANGE ORDER PROVIDES FOR:

Modifying footing and pedestal dimensions at E17R and E18R as shown on sheets 3 of 4 and 4 of 4 of this CCO as follows:

1. Revise the footing thickness for Pier E18R, shown in the table for the eastbound structure on sheet 187 of 643 as Dimension "B", from 4,000 mm to 3,500 mm.

2. Revise the pedestal heights for Piers E17R and E18R, shown in the table for the eastbound structure on sheet 187 of 643 as Dimension "A", from 5,000 mm to 5,500 mm.

3. Revise the dimension for Piers E17R and E18R, shown on the pedestal elevation on sheet 197 of 643 from 4,750 mm to 5,250 mm.

This change is necessary because the given top of pedestal elevation of +2.0 m shown for Pier E17R and E18R on plan sheet 166 does not match the elevation of +1.5 m calculated from the bottom of footing elevation shown on sheet 127, footing thicknesses shown on sheets 149 and 151, and pedestal heights shown on sheets 186 and 187. The correct top of pedestal elevation is +2.0 m, which is consistent with the rest of the piers on this project. The pedestal and footing dimensions have been revised by Design as appropriate to achieve the +2.0 m elevation.

This CCO will be paid as a decrease in Item #101, Structural Concrete, Bridge Footing, Location B (Bay), of $59,040.00 and an increase in Item #103, Structural Concrete, Bridge, Location B (Bay), of $136,314.50. An adjustment of compensation at lump sum of $53,470.36 will be paid for providing and installing additional bar reinforcing steel. Total cost of this CCO is $130,744.86, which can be financed from the contingency fund.

This CCO has been discussed and concurred by Hasan El-Natur of Structures Design, Jal Birdy of Moffat Nichol and Lina Ellis of Structures Maintenance.

No adjustment of the contract time is warranted, as this change does not affect the controlling operation.

ADA Notice: For individuals with sensory disabilities, this document is available in alternate formats. For information call: (916) 654-6410 or TDD (916) 654-3880 or write Records and Forms Management, 1120 N Street, MS-89, Sacramento, CA 95814.

CONCURRED BY:			
Construction Engineer:	Ben Ghafghazi	Date	8/20/08
Bridge Engineer:	Mehran Ardakanian	Date	8/20/08
Project Engineer:	Hasan El-Natur, Structures Design	Date	7/30/07
Project Manager:		Date	
FHWA Rep.:		Date	
Environmental:		Date	
Other (specify):	Jal Birdy, Moffat Nichol	Date	7/30/07
Other (specify):	Lina Ellis, Structures Maint.	Date	7/30/08
District Prior Approval By:		Date	
HQ (Issue Approve) By:		Date	
Resident Engineer's Signature:		Date	8/20/08

ESTIMATE OF COST

	THIS REQUEST	TOTAL TO DATE
ITEMS	$77,274.50	$77,274.50
FORCE ACCOUNT	$0.00	$0.00
AGREED PRICE	$0.00	$0.00
ADJUSTMENT	$53,470.36	$53,470.36
TOTAL	$130,744.86	$130,744.86

FEDERAL PARTICIPATION

☐ PARTICIPATING ☐ PARTICIPATING IN PART ☑ NONE
☐ NON-PARTICIPATING (MAINTENANCE) ☐ NON-PARTICIPATING

FEDERAL SEGREGATION (if more than one Funding Source or P.I.P. type)
☑ CCO FUNDED PER CONTRACT ☐ CCO FUNDED AS FOLLOWS

FEDERAL FUNDING SOURCE	PERCENT

ADA Notice: For individuals with sensory disabilities, this document is available in alternate formats. For information call: (916) 654-6410 or TDD (916) 654-3880 or write Records and Forms Management, 1120 N Street, MS-89, Sacramento, CA 95814.

STATE OF CALIFORNIA - DEPARTMENT OF TRANSPORTATION

CONTRACT CHANGE ORDER

Change Requested by: Engineer

CCO 46	Suppl. No. 0	Contract No. 04 - 0120L4	Road ALA-80-1.6/2.7	FED. AID LOC.: NO FED AID

To: **M C M CONSTRUCTION INC**

You are directed to make the following changes from the plans and specifications or do the following described work not included in the plans and specifications for this contract. ***NOTE: This change order is not effective until approved by the Engineer.***

Description of work to be done, estimate of quantities and prices to be paid. (Segregate between additional work at contract price, agreed price and force account.) Unless otherwise stated, rates for rental of equipment cover only such time as equipment is actually used and no allowance will be made for idle time. This last percentage shown is the net accumulated increase or decrease from the original quantity in the Engineer's Estimate.

Adjustment of Compensation at Lump Sum:

Reduce closure wall concrete compressive strength from 32 MPa at 28 days to 25 MPa at 28 days per revised plan sheet 117R1 as shown on sheet 2 of 2 of this CCO. Sheet 117R1 of this CCO shall replace sheet 117 of 643 of the contract plans. For this change the contractor will credit the State the sum of $1,000.00. This sum constitutes full compensation, including markups, for this change.

Adjustment of Compensation at Lump Sum .....($1,000.00)

Estimated Cost: Increase ☐ Decrease ☑ **($1,000.00)**

By reason of this order the time of completion will be adjusted as follows: 0 days

Submitted by

Signature	Resident Engineer BEN GHAFGHAZI	Date 1/14/09

Approval Recommended by

Signature	Construction Manager Amer Bata	Date 1/14/09

Engineer Approval by

Signature	Construction Manager Amer Bata	Date 1/15/09

We the undersigned contractor, have given careful consideration to the change proposed and agree, if this proposal is approved, that we will provide all equipment, furnish the materials, except as may otherwise be noted above, and perform all services necessary for the work above specified, and will accept as full payment therefor the prices shown above.

NOTE: If you, the contractor, do not sign acceptance of this order, your attention is directed to the requirements of the specifications as to proceeding with the ordered work and filing a written protest within the time therein specified.

Contractor Acceptance by

Signature	(Print name and title) Edmundo A. Pucchi - Treasurer	Date 1-14-09

MARK	DATE	DESCRIPTIONS	BY	CH'D	CCO#
1	4/28/08	REVISE CLOSURE WALL CONCRETE STRENGTH AND REVISE NOTE	VT	JSK	

REVISIONS

CONTRACT CHANGE ORDER NO. 46
SHEET 2 OF 2 04-0120L4

REGISTERED PROFESSIONAL ENGINEER VINH DIEU TRINH No. 50685 Exp. 9-30-2009 CIVIL STATE OF CALIFORNIA

STAMP IS VALID FOR REVISION 1 ONLY

To get to the Caltrans web site, go to: http://www.dot.ca.gov

DIST	COUNTY	ROUTE	KILOMETER POST TOTAL PROJECT	SHEET NO.	TOTAL SHEETS
04	Ala	80	1.6/2.7	117R1	643

Adam Wang
REGISTERED ENGINEER - CIVIL
1-29-07
PLANS APPROVAL DATE

REGISTERED PROFESSIONAL ENGINEER ADAM TN WANG No. 40402 Exp. 3-31-2007 CIVIL STATE OF CALIFORNIA

The State of California or its officers or agents shall not be responsible for the accuracy or completeness of electronic copies of this plan sheet.

T.Y. LIN / MOFFATT & NICHOL
TWO HARRISON STREET, SUITE 500
SAN FRANCISCO, CA 94105

W. KOO & ASSOCIATES, INC
525 THE CITY DRIVE SOUTH, SUITE 200
ORANGE, CA 92868

GENERAL NOTES

Load Factor Design

Design: Bridge Design Specifications-April 2000 (LFD) (1996 AASHTO with interims and revisions by Caltrans)
Dead Load: Includes 1675 N/m² for future wearing surface
Live Load: HS20-44 and alternative and permit design load
Future Mass Transit Loading:

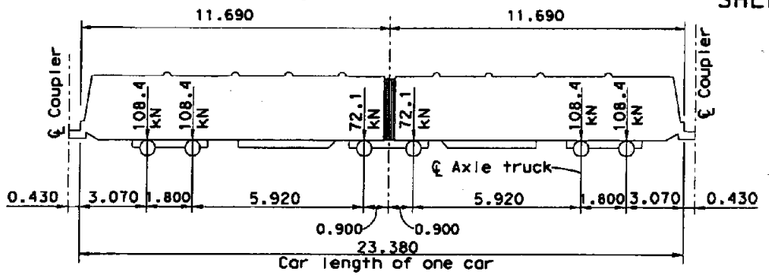

Seismic Loading: Refer to design criteria for San Francisco Bay Bridge East Span Seismic Safety Project Dated 05-01-99. See "Design ARS Curve"

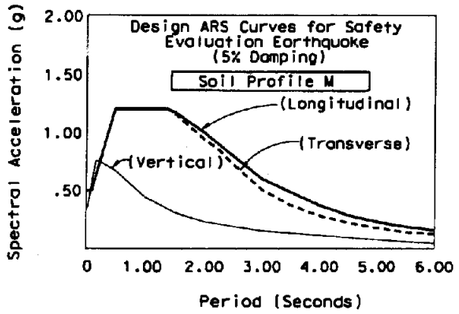

Piers E17L thru E22L & E17R thru E22R

Reinforced Concrete:

Transverse Deck Slabs
(Working Stress Design)
Fs = 140 MPa
F'c = 8 MPa
n = 10

Headed Bars:
1. At the request of the Contractor, the Engineer will consider the substitution of bars with standard hooks (90 or 135 deg) for headed bars shown on the plans, however, it is the Contractor's responsibility to demonstrate that such a subsititution can be made without compromising placement or bar spacing and cover requirements.
2. At all locations round plates shall be substituted for square plates at the ends of headed reinforcement shown on the plans, unless the Contractor can demonstrate that square plates will provide adequate clearances for placing and compaction of concrete.

Epoxy Coated Reinforcement: All reinforcement in footing, pedestals, columns, closure walls, barrier and inclined bars as stated in Hinge "FW" & West portion of Hinge "FE" shall be epoxy coated prefabricated reinforcement with purple coating.

Prestressed Concrete: See "Prestressing Notes" on "WB/EB Girder Layout" & "WB Pile Details No. 1" sheets

Pile Data: See "Pile Data" sheet

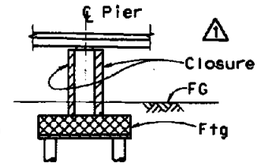

CLOSURE WALL (WB & EB)

No Scale

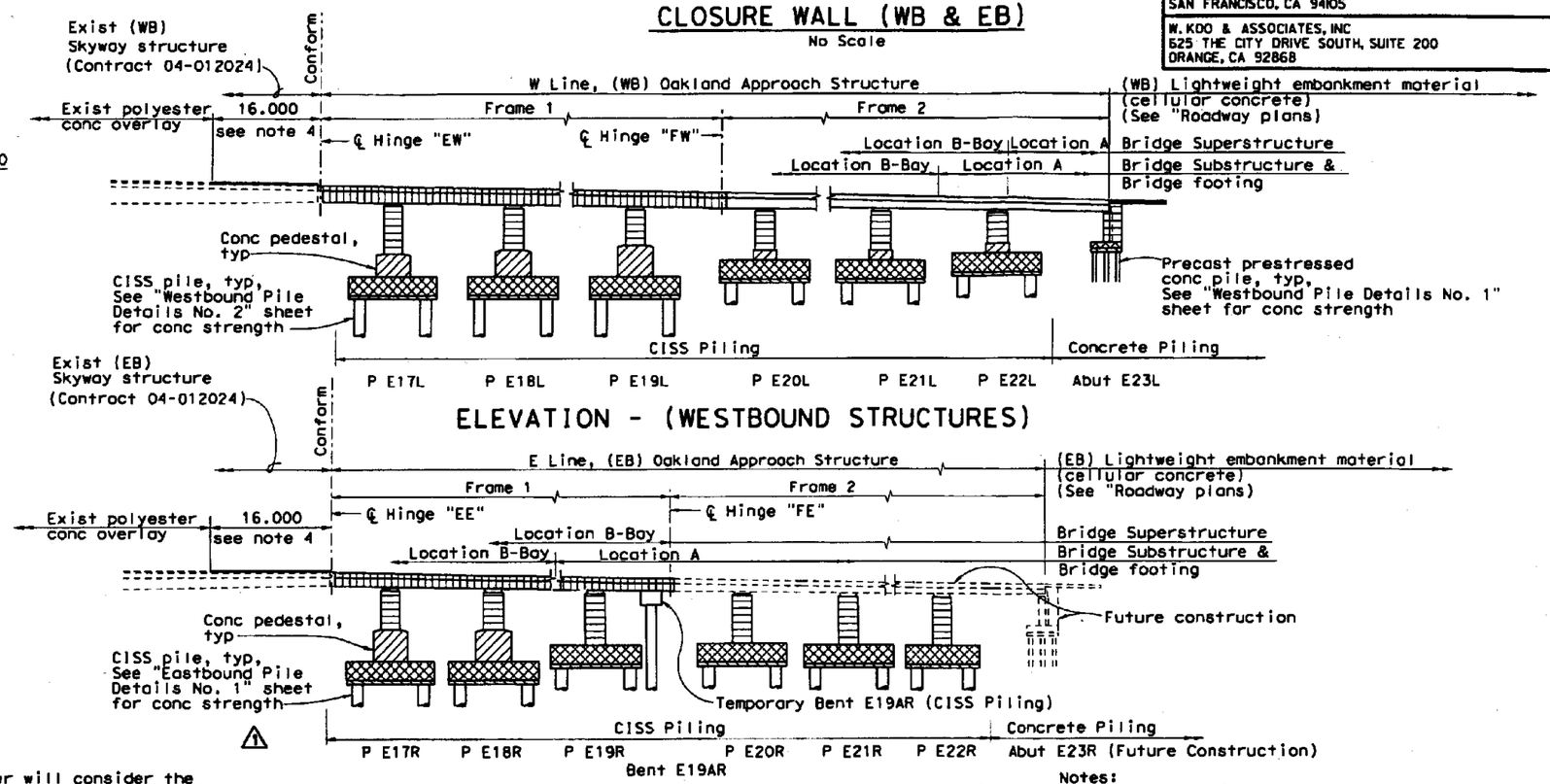

ELEVATION - (WESTBOUND STRUCTURES)

ELEVATION - (EASTBOUND STRUCTURES)

CONCRETE STRENGTH, TYPE LIMITS AND LOCATIONS

No Scale

Notes:
1. Not all piles shown.
2. Concrete strength for bikepath, see "Eastbound Bikepath Details No. 1" sheet.
3. For max concrete strength limits, see "Special Provisions" for details.
4. Place 16m polyester conc overlay over exist deck @ Skyway Structure after Hinges EW & EE coupled, see "Construction Sequence at Hinge E" sheet.
5. Utility vaults and/or precast wall are not shown, see "Service Platform Utility Vaults and Precast Wall General Plan 1" sheet.

LEGEND

- Structural Concrete, Bridge (45 MPa at 28 days) — 4 32 MPa
- Structural Concrete, Bridge (38 ~~Mpa~~ MPa at 28 days)
- Structural Concrete, Bridge (~~35 MPa~~ at 28 days), see note 3
- Structural Concrete, Bridge (25 MPa at 28 days, 35 MPa at 56 days), ~~see note 3~~ 4
- Structural Concrete, Bridge Footing (25 MPa at 28 days, 30 MPa at 56 days)
- Leveling Concrete (25 MPa @ 28 days)
- Structural Concrete, Approach Slab Type N (25 MPa at 28 days)

4 REVISED PER ADDENDUM No. 4 DATED MAY 24, 2007

ALL DIMENSIONS ARE IN METERS UNLESS OTHERWISE SHOWN

SAN FRANCISCO OAKLAND BAY BRIDGE
EAST SPAN SEISMIC SAFETY PROJECT

OAKLAND APPROACH STRUCTURES-PHASE 1

GENERAL NOTES NO. 1

DESIGN OVERSIGHT: SAM ARKAD, FRANCISCO CAMPIO, BERNARD CHAN, HASAN EL-NATUR
8-10-06
SIGN OFF DATE

	BY	CHECKED
DESIGN	A. Wang	A. Moubayed
DETAILS	G. Buelow	A. Moubayed
QUANTITIES	O. Jaradat	H. Haroun

PREPARED FOR THE STATE OF CALIFORNIA DEPARTMENT OF TRANSPORTATION

Adam Wang
PROJECT ENGINEER

BRIDGE NO. 34-0006L/R
KILOMETER POST 1.6

CU 04
EA 0120L1

DISREGARD PRINTS BEARING EARLIER REVISION DATES

REVISION DATES (PRELIMINARY STAGE ONLY): 5/24/05 10/28/05 8/28/06 10/27/06 2/23/06 6/26/06 11/27/06 1/23/06 4/23/06 7/28/06

SHEET 4R1 OF 224

Rev. Dates 5-18-99

ORIGINAL SCALE IN MILLIMETERS FOR REDUCED PLANS 0 10 20 30 40 50 60 70 80 90 100

FILE => ...\04-0120L1-34-006-b-gnote1-add_NoBub.dgn

USERNAME => BUSER DATE PLOTTED => 6/16/2008 TIME PLOTTED => 9:52:22 AM

STATE OF CALIFORNIA - DEPARTMENT OF TRANSPORTATION

CONTRACT CHANGE ORDER MEMORANDUM

DATE: 4/30/2008 Page 1 of 1

TO: AMER BATA / BEN GHAFGHAZI

FROM: BEN GHAFGHAZI

FILE: E.A. 04 - 0120L4
CO-RTE-PM ALA-80-1.6/2.7
FED. NO. NO FED AID

CCO#: 46	SUPPLEMENT#: 0	Category Code: CMPT	CONTINGENCY BALANCE (incl. this change) $14,890,674.10
COST: ($1,000.00)	INCREASE ☐ DECREASE ☑		HEADQUARTERS APPROVAL REQUIRED? ☑ YES ☐ NO
SUPPLEMENTAL FUNDS PROVIDED: $0.00			IS THIS REQUEST IN ACCORDANCE WITH ENVIRONMENTAL DOCUMENTS? ☑ YES ☐ NO

CCO DESCRIPTION:
Reduce Closure Wall Strength Requirement

PROJECT DESCRIPTION:
Construct bridge, roadway, building and electrical system.

Original Contract Time:	Time Adj. This Change:	Previously Approved CCO Time Adjustments:	Percentage Time Adjusted: (including this change)	Total # of Unreconciled Deferred Time CCO(s): (including this change)
810 Day(s)	0 Day(s)	0 Day(s)	0 %	3

THIS CHANGE ORDER PROVIDES FOR:
Reducing closure wall concrete compressive strength from 32 MPa at 28 days to 25 MPa at 28 days per revised plan sheet 117R1 as shown on sheet 2 of 2 of this CCO. Sheet 117R1 of this CCO shall replace sheet 117 of 643 of the contract plans.

This change is being made because the closure walls do not require the strength shown on the plans. The closure walls are not required to carry the same load as the bridge columns and therefore the designers determined that 25 MPa is adequate for the intended purpose of the walls.

For this change the Contractor will credit the State $1,000.00, which will be returned to the contingency fund. A detailed cost analysis is on file.

This change has been discussed and concurred with Hassan El-Natur, Structures Design, and Jal Birdy of Moffat Nichol. Maintenance concurrence is not necessary since the wall design and function has not changed. Ken Terpstra, Project Manager, concurs with this change.

No adjustment of the contract time is warranted, as this change does not affect the controlling operation.

CONCURRED BY:

Construction Engineer:		Date	
Bridge Engineer:		Date	
Project Engineer:	Hasan El-Natur, Structures Design	Date	4/21/08
Project Manager:	Ken Terprstra	Date	6/3/08
FHWA Rep.:		Date	
Environmental:		Date	
Other (specify):	Jal Birdy, Moffat Nichol	Date	4/21/08
Other (specify):		Date	
District Prior Approval By:		Date	
HQ (Issue Approve) By:		Date	
Resident Engineer's Signature:		Date	

ESTIMATE OF COST

	THIS REQUEST	TOTAL TO DATE
ITEMS	$0.00	$0.00
FORCE ACCOUNT	$0.00	$0.00
AGREED PRICE	$0.00	$0.00
ADJUSTMENT	($1,000.00)	($1,000.00)
TOTAL	($1,000.00)	($1,000.00)

FEDERAL PARTICIPATION

☐ PARTICIPATING ☐ PARTICIPATING IN PART ☑ NONE
☐ NON-PARTICIPATING (MAINTENANCE) ☐ NON-PARTICIPATING

FEDERAL SEGREGATION (if more than one Funding Source or P.I.P. type)
☑ CCO FUNDED PER CONTRACT ☐ CCO FUNDED AS FOLLOWS

FEDERAL FUNDING SOURCE	PERCENT

ADA Notice: For individuals with sensory disabilities, this document is available in alternate formats. For information call: (916) 654-6410 or TDD (916) 654-3880 or write Records and Forms Management, 1120 N Street, MS-89, Sacramento, CA 95814.

CONTRACT CHANGE ORDER

Change Requested by: Engineer

CCO 47	Suppl. No. 0	Contract No. 04 - 0120L4	Road ALA-80-1.6/2.7	FED. AID LOC.: NO FED AID

To: **M C M CONSTRUCTION INC**

You are directed to make the following changes from the plans and specifications or do the following described work not included in the plans and specifications for this contract. ***NOTE: This change order is not effective until approved by the Engineer.***

Description of work to be done, estimate of quantities and prices to be paid. (Segregate between additional work at contract price, agreed price and force account.) Unless otherwise stated, rates for rental of equipment cover only such time as equipment is actually used and no allowance will be made for idle time. This last percentage shown is the net accumulated increase or decrease from the original quantity in the Engineer's Estimate.

Revise temporary striping and provide traffic control as shown on sheets 3 of 33 through 33 of 33 of this CCO.

Estimate of Increase in Contract Item at Contract Price:

Item No. 34: REMOVE PAINTED TRAFFIC STRIPE
68 M (+5.11%) $5.00 /M = +$340.00 (+5.11%)

Item No. 35: REMOVE THERMOPLASTIC TRAFFIC STRIPE
67 M (+3.10%) $4.00 /M = +$268.00 (+3.10%)

Item No. 36: REMOVE PAVEMENT MARKER
27 EA (+2.84%) $2.00 /EA = +$54.00 (+2.84%)

Item No. 168: PAINT TRAFFIC STRIPE (2-COAT)
213 M (+7.63%) $1.00 /M = +$213.00 (+7.63%)

Item No. 172: PAVEMENT MARKER (RETROREFLECTIVE)
14 EA (+3.11%) $5.00 /EA = +$70.00 (+3.11%)

Total cost for Increase in Contract Item.....$945.00

Extra Work at Force Account:

Provide traffic control for striping work in accordance with Traffic Handling Plans on sheets 9 of 33 through 31 of 33 of this CCO. Place 300 mm white diagonal stripe per sheets 5 of 33 and 6 of 33 of this CCO. Traffic control work shall be in accordance with Section 10-1.25, "Maintaining Traffic," 10-1.26, "Closure Requirements and Conditions," and 10-1.27, "Traffic Control System for Lane Closure," of the Special Provisions. Diagonal stripe shall be in accordance with Section 10-1.28, "Temporary Pavement Delineation," of the Special Provisions.

Estimated cost of Extra Work at Force Account $20,000.00

Extra Work at Unit Price:

Install Object Marker (Type L-1) in accordance with Caltrans Standard Plan A73A at the location shown on sheet 6 of 33 of this CCO. For this work, the contractor will be paid $150.00. This price constitutes full compensation, including all markups, for the work of this change.

Extra Work at Agreed Unit Price $150.00

CONTRACT CHANGE ORDER

Change Requested by: Engineer

CCO 47	Suppl. No. 0	Contract No. 04 - 0120L4	Road ALA-80-1.6/2.7	FED. AID LOC.: NO FED AID

Estimated Cost: **Increase** ☑ **Decrease** ☐ **$21,095.00**

By reason of this order the time of completion will be adjusted as follows: 0 days

Submitted by

Signature	~~Resident~~ Engineer BEN GHAFGHAZI	Date 11/6/07

Approval Recommended by

Signature	Construction Engineer Ben Ghafghazi	Date 11/6/07

Engineer Approval by

Signature	Construction Engineer Ben Ghafghazi	Date 3/20/09

We the undersigned contractor, have given careful consideration to the change proposed and agree, if this proposal is approved, that we will provide all equipment, furnish the materials, except as may otherwise be noted above, and perform all services necessary for the work above specified, and will accept as full payment therefor the prices shown above.

NOTE: If you, the contractor, do not sign acceptance of this order, your attention is directed to the requirements of the specifications as to proceeding with the ordered work and filing a written protest within the time therein specified.

Contractor Acceptance by

Signature	(Print name and title) EDMUNDO A. TUCHI, TREASURER	Date 3/17/09

DIST	COUNTY	ROUTE	KILOMETER POST TOTAL PROJECT	SHEET NO	TOTAL SHEETS
04	Ala	80	1.6/2.7	75R2	643

REGISTERED CIVIL ENGINEER 8-29-06

1-29-07
PLANS APPROVAL DATE

REGISTERED PROFESSIONAL ENGINEER J.E. Gutierrez No. 52324 Exp. 12-31-08 CIVIL STATE OF CALIFORNIA

The State of California or its officers or agents shall not be responsible for the accuracy or completeness of electronic copies of this plan sheet.

To get to the Caltrans web site, go to: http://www.dot.ca.gov

Caltrans Metric

LEGEND (SHEETS TH-1 TO TH-7)

1. Construction Area
- Conc Barrier (Type K)
- Temporary MBGR
- Direction of Traffic
- Channelizers (Surface Mounted)
- T (No.) Temporary Traffic Stripe
- Guard Railing Delineator (spaced every other post)
2. Object Marker (Type L-1)

7-29-08
REGISTERED CIVIL ENGINEER

REGISTERED PROFESSIONAL ENGINEER Rodney Oto No. 42739 Exp. 3-31-10 CIVIL STATE OF CALIFORNIA

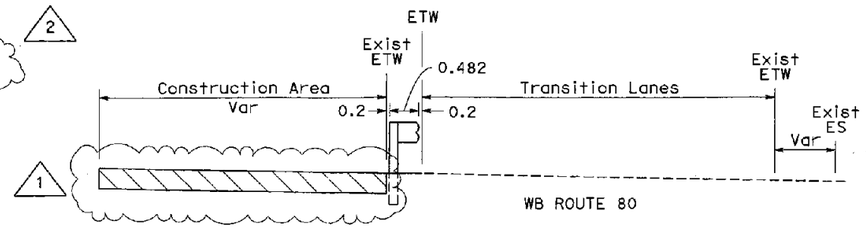

TYPICAL
W 89+29 to 93+65
NO SCALE

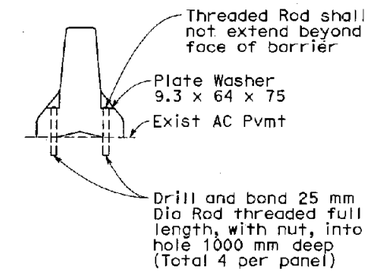

CONCRETE BARRIER (TYPE K) DOWELING DETAILS
NO SCALE

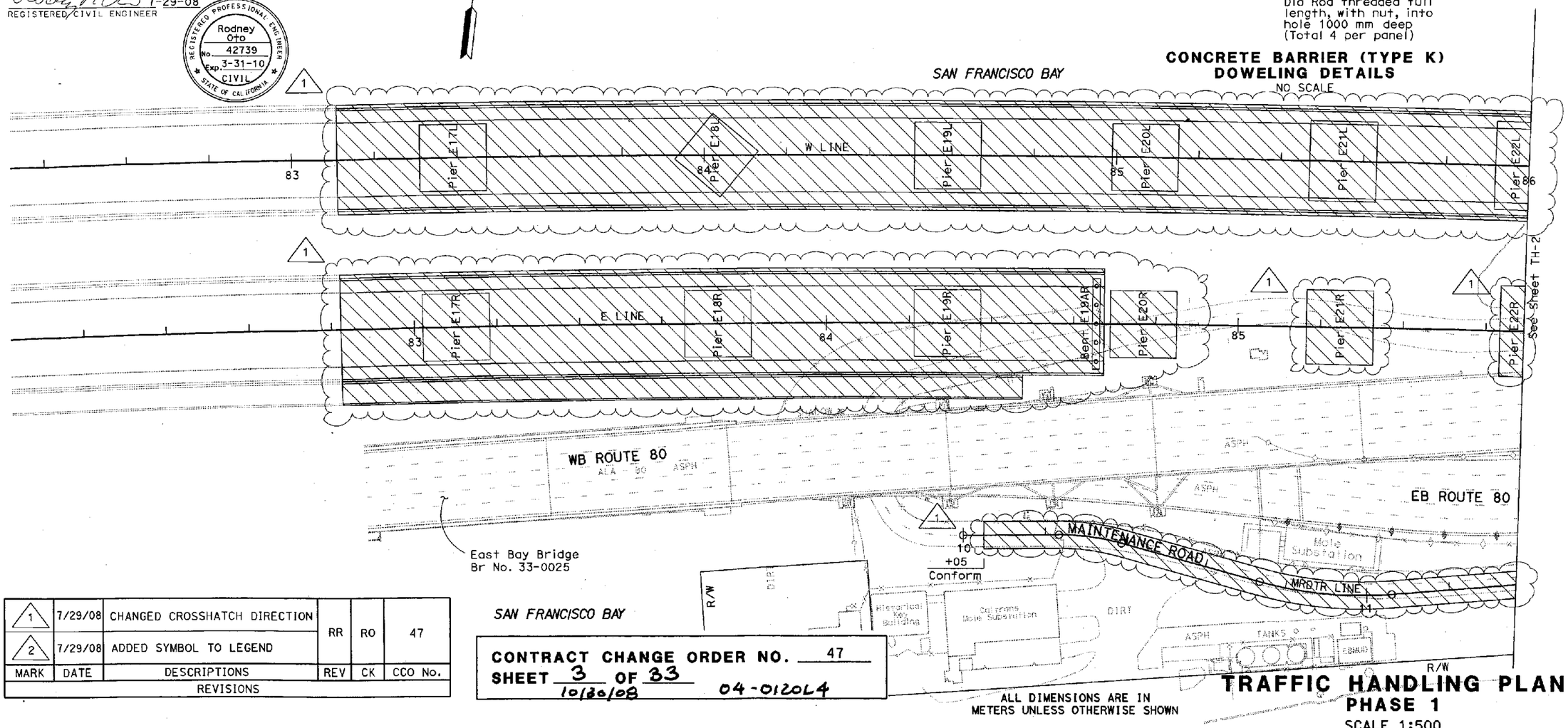

MARK	DATE	DESCRIPTIONS	REV	CK	CCO No.
1	7/29/08	CHANGED CROSSHATCH DIRECTION	RR	RO	47
2	7/29/08	ADDED SYMBOL TO LEGEND			

REVISIONS

CONTRACT CHANGE ORDER NO. 47
SHEET 3 **OF** 33
10/30/08 04-0120L4

ALL DIMENSIONS ARE IN METERS UNLESS OTHERWISE SHOWN

TRAFFIC HANDLING PLAN
PHASE 1
SCALE 1:500

THIS PLAN ACCURATE FOR TRAFFIC HANDLING WORK ONLY.

TH-1

STATE OF CALIFORNIA - DEPARTMENT OF TRANSPORTATION
Caltrans
TOLL BRIDGE
PROJECT ENGINEER J. E. GUTIERREZ
CALCULATED/DESIGNED BY
CHECKED BY
DATE REVISED BY
DATE REVISED

LAST REVISION 08-25-08
DATE PLOTTED => 25-AUG-2008
TIME PLOTTED => 10:32

FOR REDUCED PLANS ORIGINAL SCALE IS IN MILLIMETERS 0 20 40 60 80
USERNAME => s126849
CU 04351
EA 0120L4

MARK	DATE	DESCRIPTIONS	REV	CK	CCO No.
1	7/29/08	CHANGED CROSSHATCH DIRECTION	RR	RO	47

REVISIONS

CONTRACT CHANGE ORDER NO. 47
SHEET 4 OF 33
10/30/08 04-0120L4

DIST	COUNTY	ROUTE	KILOMETER POST TOTAL PROJECT	SHEET No	TOTAL SHEETS
04	Ala	80	1.6/2.7	76R1	643

REGISTERED CIVIL ENGINEER 8-29-06

1-29-07
PLANS APPROVAL DATE

REGISTERED PROFESSIONAL ENGINEER J.E. Gutierrez No. 52324 Exp. 12-31-08 CIVIL STATE OF CALIFORNIA

The State of California or its officers or agents shall not be responsible for the accuracy or completeness of electronic copies of this plan sheet.

To get to the Caltrans web site, go to: http://www.dot.ca.gov

Rodney Oto 7-29-08
REGISTERED CIVIL ENGINEER

REGISTERED PROFESSIONAL ENGINEER Rodney Oto No. 42739 Exp. 3-31-10 CIVIL STATE OF CALIFORNIA

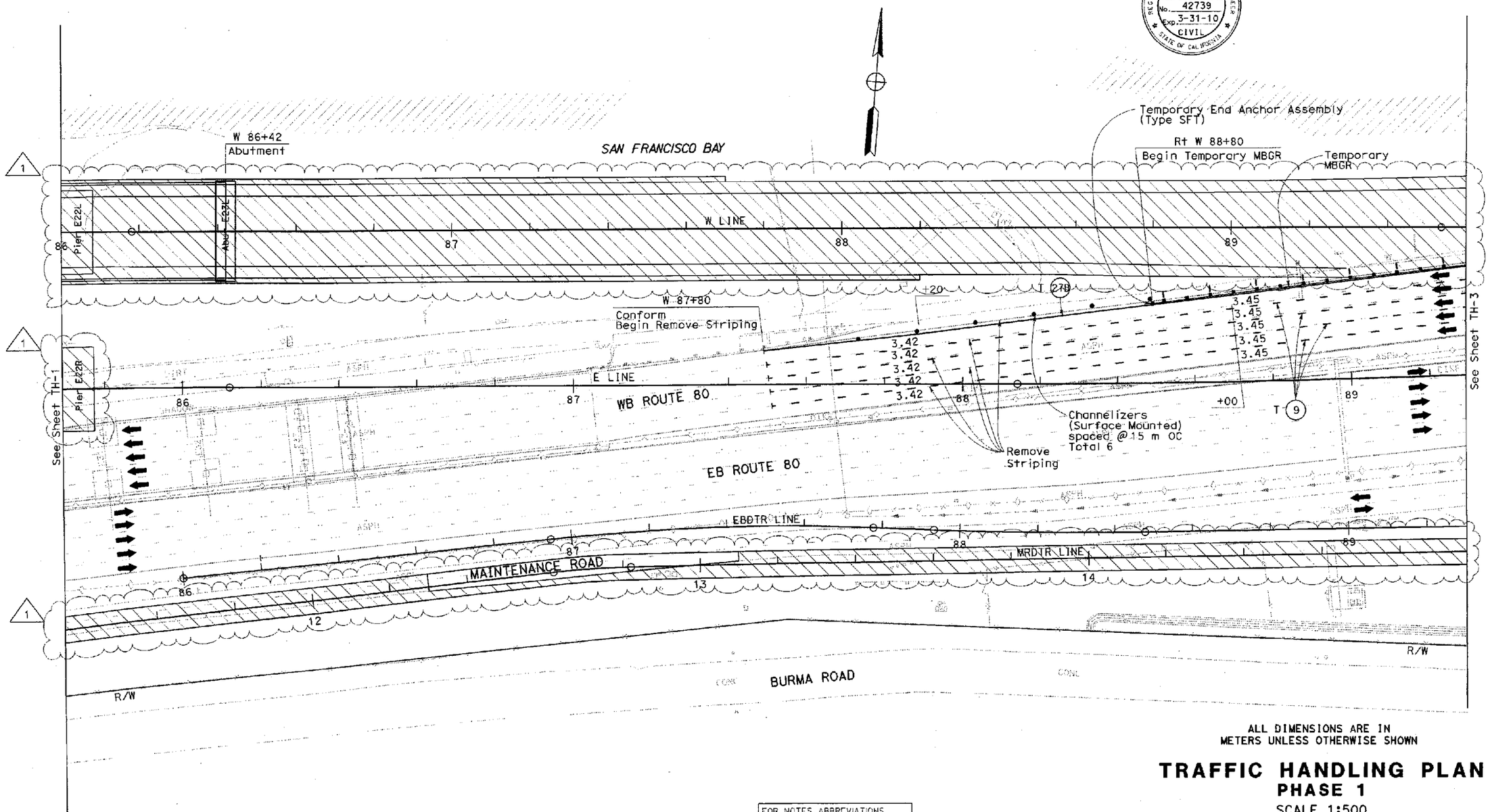

ALL DIMENSIONS ARE IN
METERS UNLESS OTHERWISE SHOWN

TRAFFIC HANDLING PLAN
PHASE 1
SCALE 1:500

FOR NOTES, ABBREVIATIONS &/OR LEGEND, SEE SHEET TH-1

THIS PLAN ACCURATE FOR TRAFFIC HANDLING WORK ONLY.

TH-2

DATE	REVISED BY	DATE REVISED

CALCULATED/DESIGNED BY
CHECKED BY

PROJECT ENGINEER J. E. GUTIERREZ

STATE OF CALIFORNIA - DEPARTMENT OF TRANSPORTATION
Caltrans
TOLL BRIDGE

LAST REVISION 07-30-08
DATE PLOTTED => 30 JUL 2008
TIME PLOTTED => 17:00

FOR REDUCED PLANS ORIGINAL SCALE IS IN MILLIMETERS 0 20 40 60 80

USERNAME => s126849
DGN FILE => 40120imd002.cco

CU 04251 EA 0120L1

MARK	DATE	DESCRIPTIONS	REV	CK	CCO No.
1	7/29/08	CHANGED CROSSHATCH DIRECTION	RR	RO	47
2	7/29/08	ADDED DIAGONAL STRIPE			

REVISIONS

CONTRACT CHANGE ORDER NO. 47
SHEET 5 **OF** 33
10/30/08 04-012064

DIST	COUNTY	ROUTE	KILOMETER POST TOTAL PROJECT	SHEET No	TOTAL SHEETS
04	Ala	80	1.6/2.7	77R1	643

REGISTERED CIVIL ENGINEER 8-29-06

1-29-07
PLANS APPROVAL DATE

REGISTERED PROFESSIONAL ENGINEER J.E. Gutierrez No. 52324 Exp. 12-31-08 CIVIL STATE OF CALIFORNIA

The State of California or its officers or agents shall not be responsible for the accuracy or completeness of electronic copies of this plan sheet.

To get to the Caltrans web site, go to: http://www.dot.ca.gov

Rodney Oto 7-29-08
REGISTERED CIVIL ENGINEER

REGISTERED PROFESSIONAL ENGINEER Rodney Oto No. 42739 Exp. 3-31-10 CIVIL STATE OF CALIFORNIA

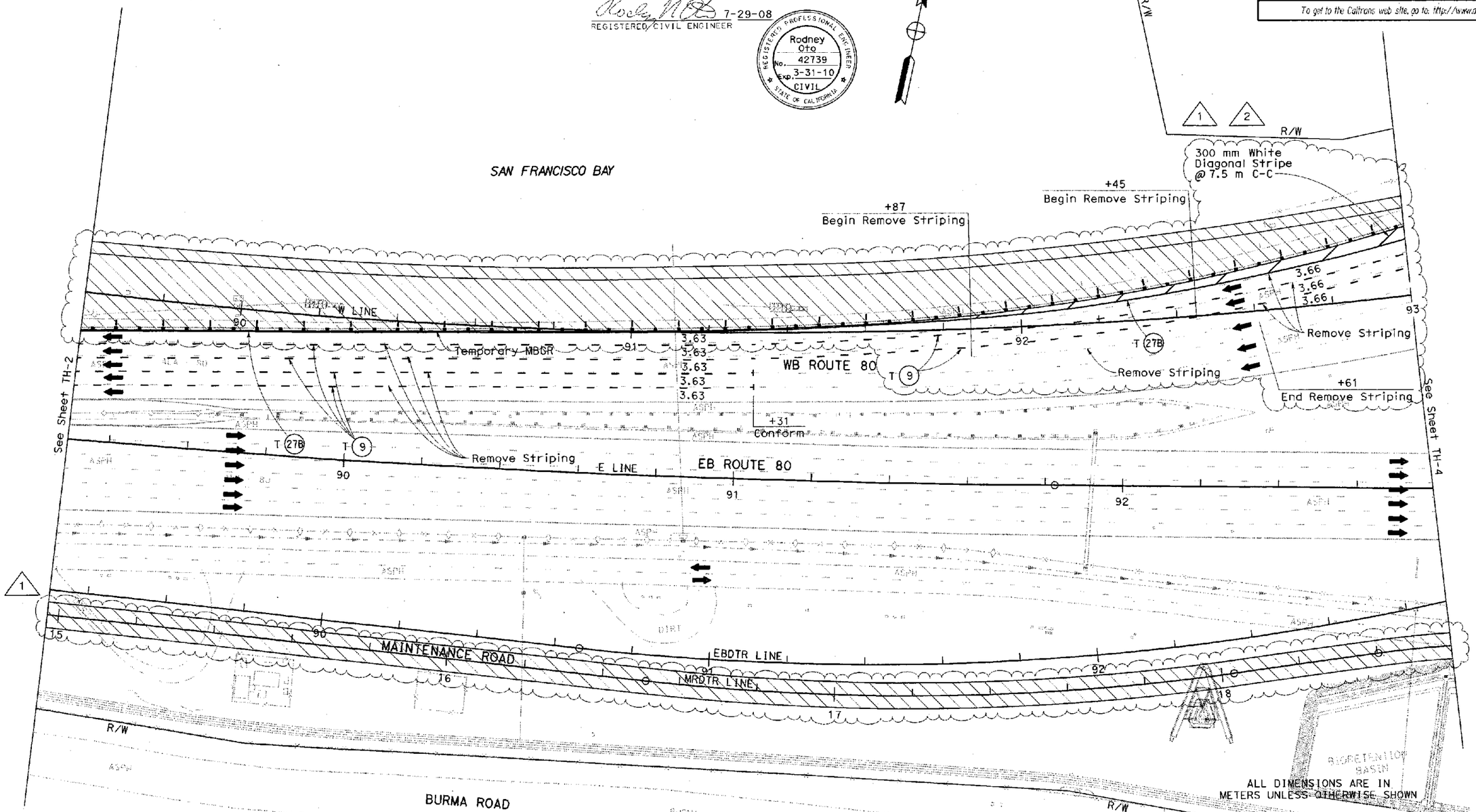

ALL DIMENSIONS ARE IN METERS UNLESS OTHERWISE SHOWN

TRAFFIC HANDLING PLAN
PHASE 1
SCALE 1:500

FOR NOTES, ABBREVIATIONS &/OR LEGEND, SEE SHEET TH-1

THIS PLAN ACCURATE FOR TRAFFIC HANDLING WORK ONLY.

TH-3

STATE OF CALIFORNIA - DEPARTMENT OF TRANSPORTATION
Caltrans
TOLL BRIDGE

PROJECT ENGINEER: J. E. GUTIERREZ
CALCULATED/DESIGNED BY
CHECKED BY
DATE REVISED BY
DATE REVISED

LAST REVISION 07-30-08
DATE PLOTTED => 30-JUL-2008
TIME PLOTTED => 17:02

FOR REDUCED PLANS ORIGINAL SCALE IS IN MILLIMETERS 0 20 40 60 80

USERNAME => s126849
DGN FILE => 40120ctd003.dgn

CU 04251 EA 0120L1

MARK	DATE	DESCRIPTIONS	REV	CK	CCO No.
1	7/29/08	CHANGED CROSSHATCH DIRECTION	RR	RO	47
2	7/29/08	ADDED TEMPORARY STRIPING AND DIAGONAL STRIPING			
3	7/29/08	ADDED OBJECT MARKER			

REVISIONS

Rodney Oto 7-29-08
REGISTERED CIVIL ENGINEER

REGISTERED PROFESSIONAL ENGINEER Rodney Oto No. 42739 Exp. 3-31-10 CIVIL STATE OF CALIFORNIA

CONTRACT CHANGE ORDER NO. 47
SHEET 6 OF 33
10/30/08 04-012064

Caltrans Metric

DIST	COUNTY	ROUTE	KILOMETER POST TOTAL PROJECT	SHEET NO.	TOTAL SHEETS
04	Ala	80	1.6/2.7	78R1	643

8-29-06
REGISTERED CIVIL ENGINEER

1-29-07
PLANS APPROVAL DATE

REGISTERED PROFESSIONAL ENGINEER J.E. Gutierrez No. 52324 Exp. 12-31-08 CIVIL STATE OF CALIFORNIA

The State of California or its officers or agents shall not be responsible for the accuracy or completeness of electronic copies of this plan sheet.

To get to the Caltrans web site, go to: http://www.dot.ca.gov

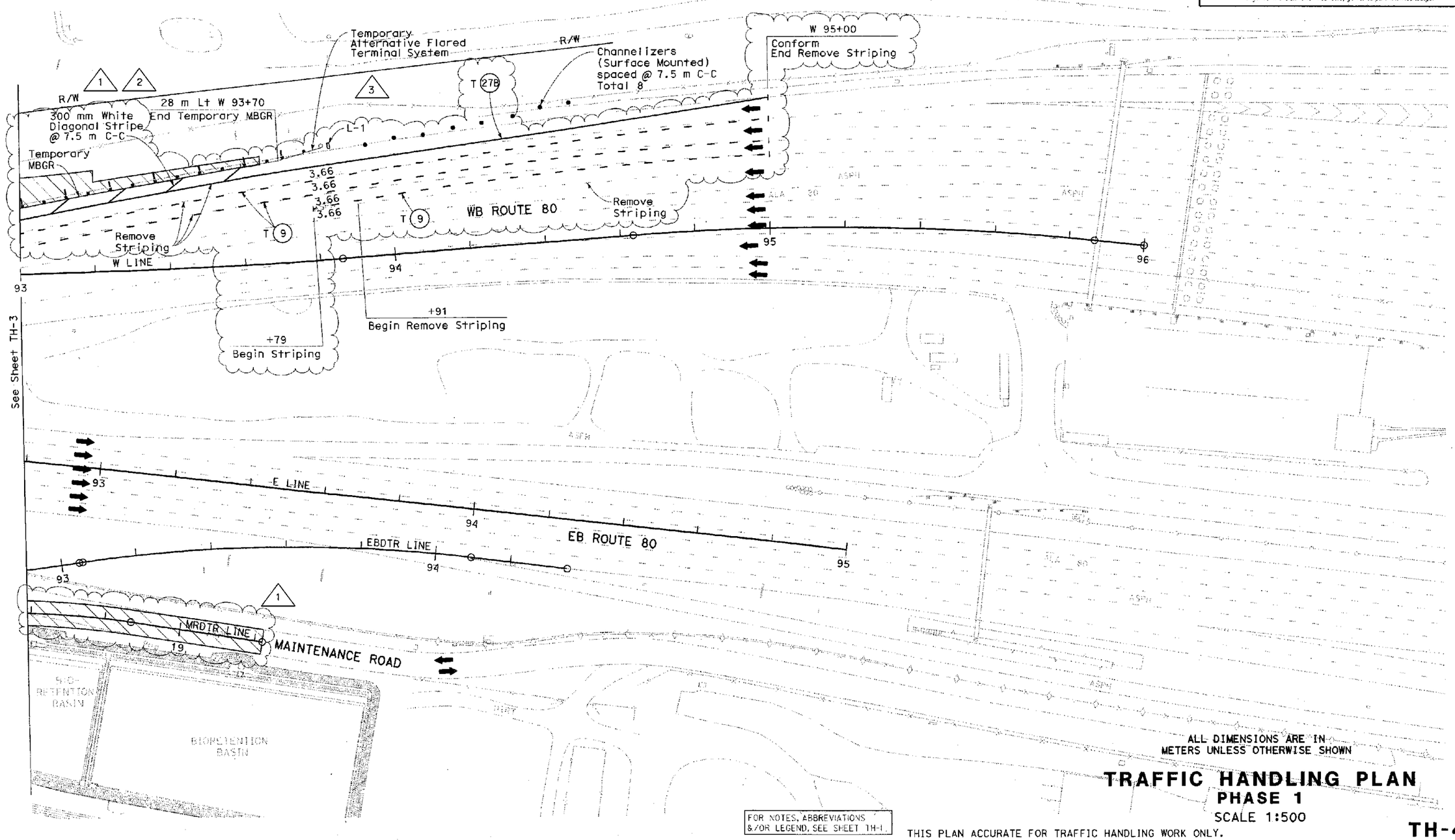

ALL DIMENSIONS ARE IN METERS UNLESS OTHERWISE SHOWN

TRAFFIC HANDLING PLAN
PHASE 1
SCALE 1:500

FOR NOTES, ABBREVIATIONS &/OR LEGEND, SEE SHEET TH-1

THIS PLAN ACCURATE FOR TRAFFIC HANDLING WORK ONLY.

TH-4

STATE OF CALIFORNIA - DEPARTMENT OF TRANSPORTATION
Caltrans
TOLL BRIDGE

PROJECT ENGINEER: J. E. GUTIERREZ
CALCULATED/DESIGNED BY
CHECKED BY
DATE | REVISED BY | DATE REVISED

LAST REVISION 07-30-08
DATE PLOTTED => 30-JUL-2008
TIME PLOTTED => 17:03

FOR REDUCED PLANS ORIGINAL SCALE IS IN MILLIMETERS 0 20 40 60 80
USERNAME => s126849
DGN FILE => 40120tmd004.cce
CU 04251
EA 0120L1

DIST	COUNTY	ROUTE	KILOMETER POST TOTAL PROJECT	SHEET NO.	TOTAL SHEETS
04	Ala	80	1.6/2.7	79R1	643

REGISTERED CIVIL ENGINEER 8-29-06

1-29-07
PLANS APPROVAL DATE

REGISTERED PROFESSIONAL ENGINEER J.E. Gutierrez No. 52324 Exp. 12-31-08 CIVIL STATE OF CALIFORNIA

The State of California or its officers or agents shall not be responsible for the accuracy or completeness of electronic copies of this plan sheet.

To get to the Caltrans web site, go to: http://www.dot.ca.gov

Caltrans Metric

MARK	DATE	DESCRIPTIONS	REV	CK	CCO No.
1	7/29/08	CHANGED CROSSHATCH DIRECTION	RR	JG	47

REVISIONS

CONTRACT CHANGE ORDER NO. 47
SHEET 7 OF 33
10/30/08 04-0120L4

REGISTERED CIVIL ENGINEER 7-28-08

REGISTERED PROFESSIONAL ENGINEER Rafael A. Ravelo No. 68941 Exp. 12-31-09 CIVIL STATE OF CALIFORNIA

STAMP IS VALID FOR REVISION 1 ONLY

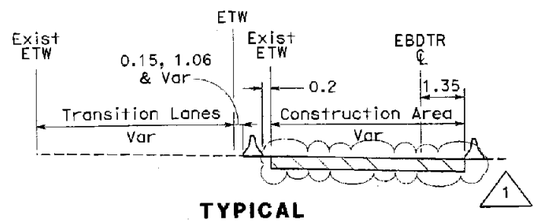

TYPICAL
EBDTR 86+75 to 93+70
NO SCALE

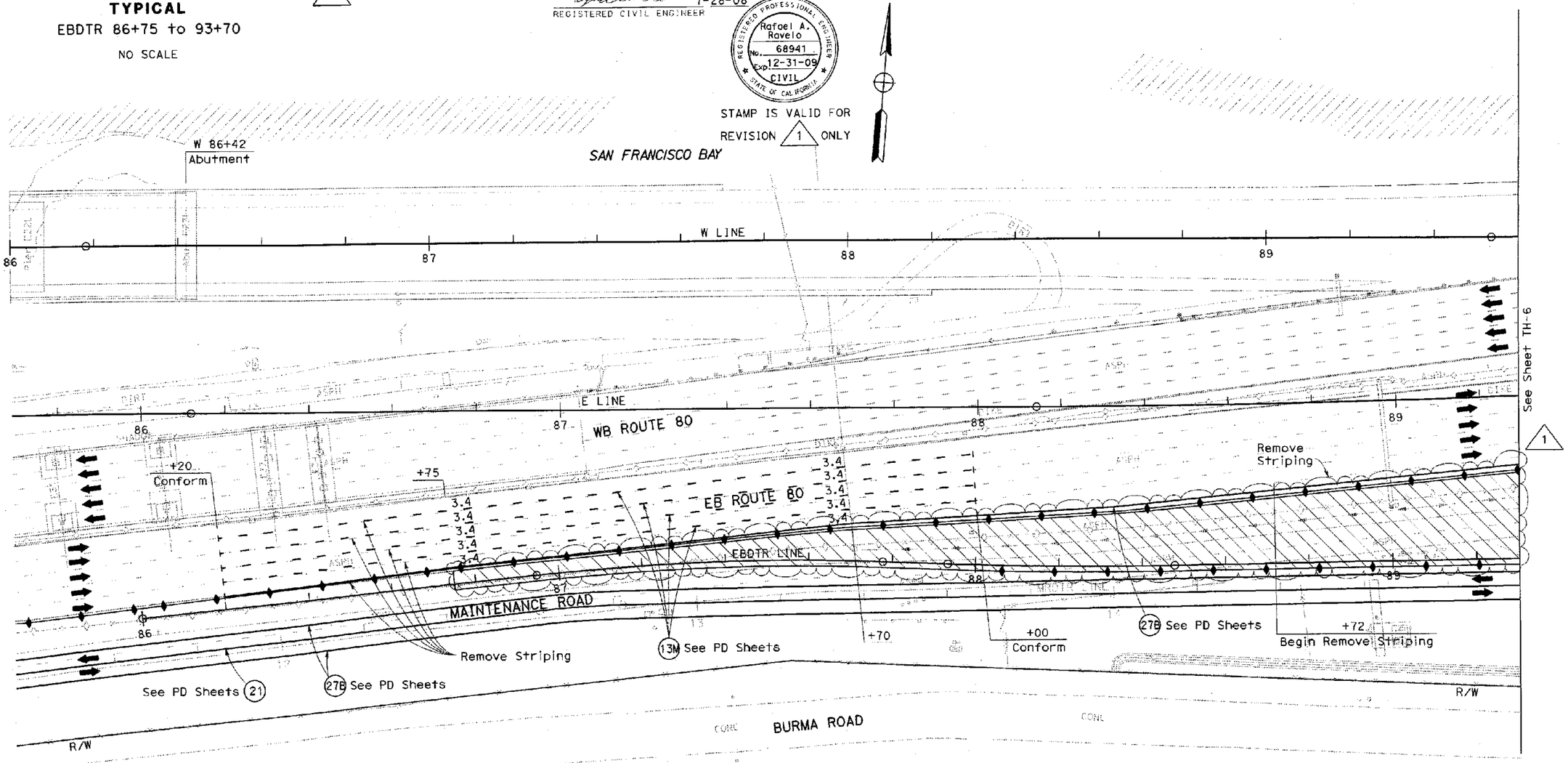

ALL DIMENSIONS ARE IN METERS UNLESS OTHERWISE SHOWN

TRAFFIC HANDLING PLAN
PHASE 2
SCALE 1:500

FOR NOTES, ABBREVIATIONS &/OR LEGEND, SEE SHEET TH-1

THIS PLAN ACCURATE FOR TRAFFIC HANDLING WORK ONLY.

TH-5

STATE OF CALIFORNIA - DEPARTMENT OF TRANSPORTATION
Caltrans
TOLL BRIDGE

PROJECT ENGINEER: J. E. GUTIERREZ

CALCULATED/DESIGNED BY | CHECKED BY | DATE | REVISED BY | DATE REVISED

LAST REVISION 07-30-08 | DATE PLOTTED => 30-JUL-2008 | TIME PLOTTED => 17:05

FOR REDUCED PLANS ORIGINAL SCALE IS IN MILLIMETERS 0 20 40 60 80

USERNAME => s126849
DGN FILE => 40120lmd005.cco

CU 04251 | EA 0120L1

MARK	DATE	DESCRIPTIONS	REV	CK	CCO No.
1	7/29/08	CHANGED CROSSHATCH DIRECTION	RR	JG	47

REVISIONS

CONTRACT CHANGE ORDER NO. 47
SHEET 8 OF 33
10/30/08 04-0120L4

DIST	COUNTY	ROUTE	KILOMETER POST TOTAL PROJECT	SHEET No	TOTAL SHEETS
04	Ala	80	1.6/2.7	80R1	643

REGISTERED CIVIL ENGINEER 8-29-06

1-29-07
PLANS APPROVAL DATE

J.E. Gutierrez No. 52324 Exp. 12-31-08 CIVIL — REGISTERED PROFESSIONAL ENGINEER — STATE OF CALIFORNIA

The State of California or its officers or agents shall not be responsible for the accuracy or completeness of electronic copies of this plan sheet.

To get to the Caltrans web site, go to: http://www.dot.ca.gov

Caltrans Metric

REGISTERED CIVIL ENGINEER 7-28-08

Rafael A. Ravelo No. 68941 Exp. 12-31-09 CIVIL — REGISTERED PROFESSIONAL ENGINEER — STATE OF CALIFORNIA

STAMP IS VALID FOR REVISION 1 ONLY

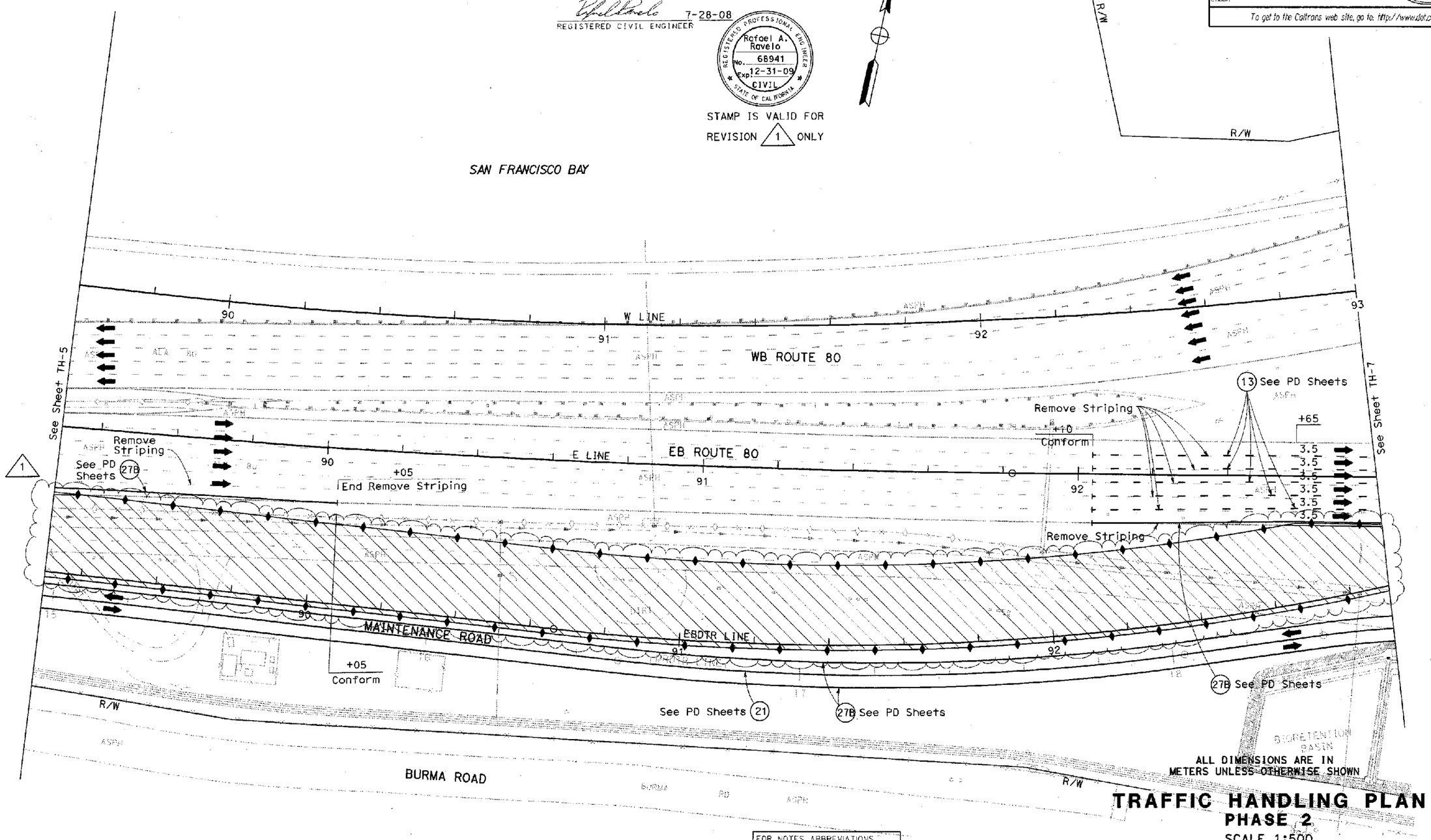

ALL DIMENSIONS ARE IN METERS UNLESS OTHERWISE SHOWN

TRAFFIC HANDLING PLAN
PHASE 2
SCALE 1:500

FOR NOTES, ABBREVIATIONS &/OR LEGEND, SEE SHEET TH-1

THIS PLAN ACCURATE FOR TRAFFIC HANDLING WORK ONLY.

TH-6

STATE OF CALIFORNIA - DEPARTMENT OF TRANSPORTATION
Caltrans
TOLL BRIDGE

PROJECT ENGINEER J. E. GUTIERREZ

CALCULATED/DESIGNED BY | CHECKED BY | DATE | REVISED BY | DATE REVISED

LAST REVISION 07-30-08 | DATE PLOTTED => 30-JUL-2008 | TIME PLOTTED => 17:07

FOR REDUCED PLANS ORIGINAL SCALE IS IN MILLIMETERS 0 20 40 60 80

USERNAME => s126849
DGN FILE => 40120lmd006.cco

CU 04251 | EA 0120L1

MARK	DATE	DESCRIPTIONS	REV	CK	CCO No.
1	7/29/08	CHANGED CROSSHATCH DIRECTION	RR	JG	47

REVISIONS

CONTRACT CHANGE ORDER NO. 47
SHEET 9 OF 33
10/30/08 04-0120L4

DIST	COUNTY	ROUTE	KILOMETER POST TOTAL PROJECT	SHEET No	TOTAL SHEETS
04	Ala	80	1.6/2.7	81R1	643

8-29-06
REGISTERED CIVIL ENGINEER

1-29-07
PLANS APPROVAL DATE

REGISTERED PROFESSIONAL ENGINEER J.E. Gutierrez No. 52324 Exp. 12-31-08 CIVIL STATE OF CALIFORNIA

The State of California or its officers or agents shall not be responsible for the accuracy or completeness of electronic copies of this plan sheet.

To get to the Caltrans web site, go to: http://www.dot.ca.gov

Caltrans Metric

7-28-08
REGISTERED CIVIL ENGINEER

REGISTERED PROFESSIONAL ENGINEER Rafael A. Ravelo No. 68941 Exp. 12-31-09 CIVIL STATE OF CALIFORNIA

STAMP IS VALID FOR REVISION 1 ONLY

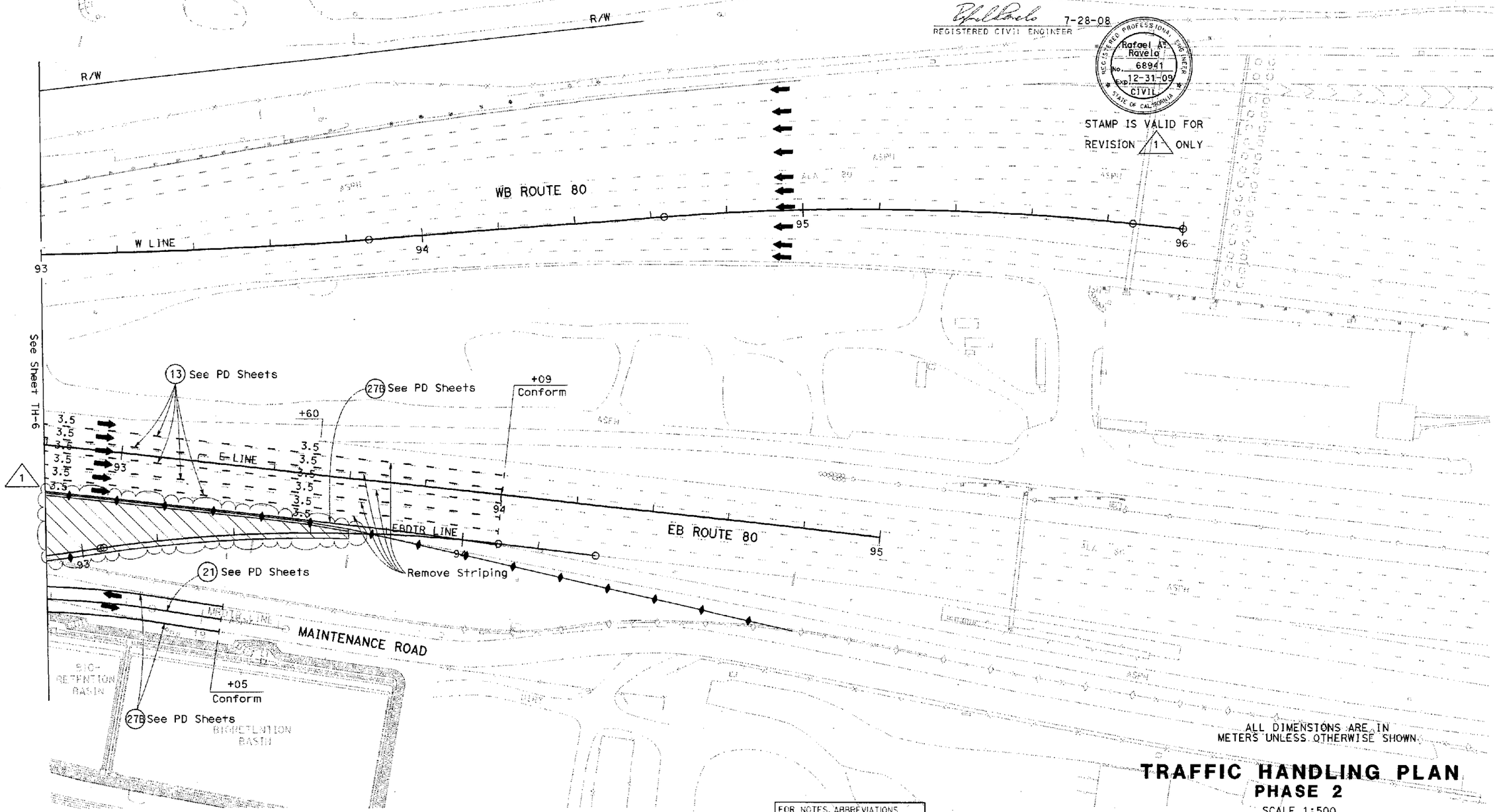

ALL DIMENSIONS ARE IN METERS UNLESS OTHERWISE SHOWN.

TRAFFIC HANDLING PLAN
PHASE 2
SCALE 1:500

FOR NOTES, ABBREVIATIONS &/OR LEGEND, SEE SHEET TH-1

THIS PLAN ACCURATE FOR TRAFFIC HANDLING WORK ONLY

TH-7

STATE OF CALIFORNIA - DEPARTMENT OF TRANSPORTATION
Caltrans
TOLL BRIDGE

PROJECT ENGINEER: J. E. GUTIERREZ
CALCULATED/DESIGNED BY
CHECKED BY
DATE REVISED BY
DATE REVISED

LAST REVISION 07-30-08
DATE PLOTTED => 30-JUL-2008
TIME PLOTTED => 17:10

FOR REDUCED PLANS ORIGINAL SCALE IS IN MILLIMETERS 0 20 40 60 80

USERNAME => s126849
DGN FILE => 40120lmd007.cce

CU 04251
EA 0120L1

DIST	COUNTY	ROUTE	KILOMETER POST TOTAL PROJECT	SHEET No	TOTAL SHEETS
04	Ala	80	1.6/2.7	81AR0	643

REGISTERED CIVIL ENGINEER 7-28-08

PLANS APPROVAL DATE

REGISTERED PROFESSIONAL ENGINEER Rafael A. Ravelo No. 68941 Exp. 12-31-09 CIVIL STATE OF CALIFORNIA

The State of California or its officers or agents shall not be responsible for the accuracy or completeness of electronic copies of this plan sheet.

Caltrans now has a web site! To get to the web site, go to: http://www.dot.ca.gov

Caltrans Metric

CONTRACT CHANGE ORDER NO. 47
SHEET 10 **OF** 33
10/30/08 04-0120L4

LEGEND: (SHEETS TH-8 TO TH-29)

- TRAFFIC CONE
- DIRECTION OF TRAFFIC
- PORTABLE SIGN
- FLASHING ARROW SIGN (FAS)
- FAS SUPPORT OR TRAILER
- BARRICADES

NOTES:

1. FOR DETAILS OF TRAFFIC CONTROL SYSTEM NOT SHOWN, SEE STANDARD PLAN T10 AND T14.
2. TRAFFIC CONES ARE 15 m (Max) SPACING.
3. TRAFFIC CONES ARE 30 m (Max) SPACING.
4. BARRICADES SHALL BE TYPE I, II, OR III.

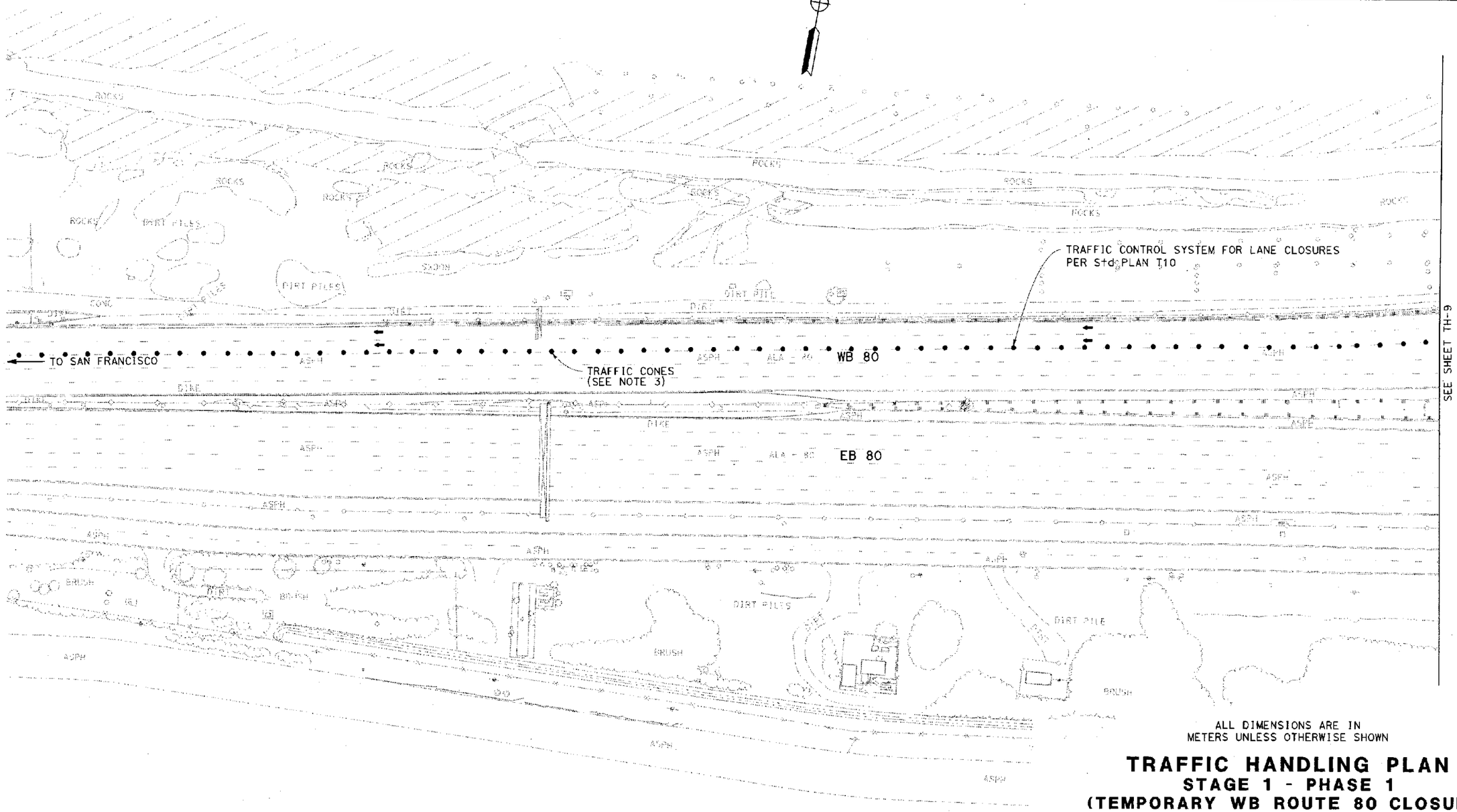

ALL DIMENSIONS ARE IN METERS UNLESS OTHERWISE SHOWN

TRAFFIC HANDLING PLAN
STAGE 1 - PHASE 1
(TEMPORARY WB ROUTE 80 CLOSURE)

SCALE 1:500

THIS PLAN ACCURATE FOR TRAFFIC HANDLING WORK ONLY.

TH-8

STATE OF CALIFORNIA - DEPARTMENT OF TRANSPORTATION
Caltrans
TOLL BRIDGE

PROJECT ENGINEER: J.E. GUTIERREZ

CALCULATED/DESIGNED BY | CHECKED BY

DATE | REVISED BY | DATE REVISED

LAST REVISION 07-30-08 | DATE PLOTTED => 30-JUL-2008 | TIME PLOTTED => 17:11

RELATIVE BORDER SCALE IS IN MILLIMETERS 0 20 40 60 80

USERNAME => s126849
DGN FILE => 401201md008.dgn

CU 04251 | EA 0120L1

DIST	COUNTY	ROUTE	KILOMETER POST TOTAL PROJECT	SHEET No	TOTAL SHEETS
04	Ala	80	1.6/2.7	81BR0	643

REGISTERED CIVIL ENGINEER 7-28-08

PLANS APPROVAL DATE

Rafael A. Ravelo No. 68941 Exp. 12-31-09 CIVIL STATE OF CALIFORNIA REGISTERED PROFESSIONAL ENGINEER

The State of California or its officers or agents shall not be responsible for the accuracy or completeness of electronic copies of this plan sheet.

Caltrans now has a web site! To get to the web site, go to: http://www.dot.ca.gov

CONTRACT CHANGE ORDER NO. 47
SHEET 11 OF 33
10/30/08 04-012014

Caltrans Metric

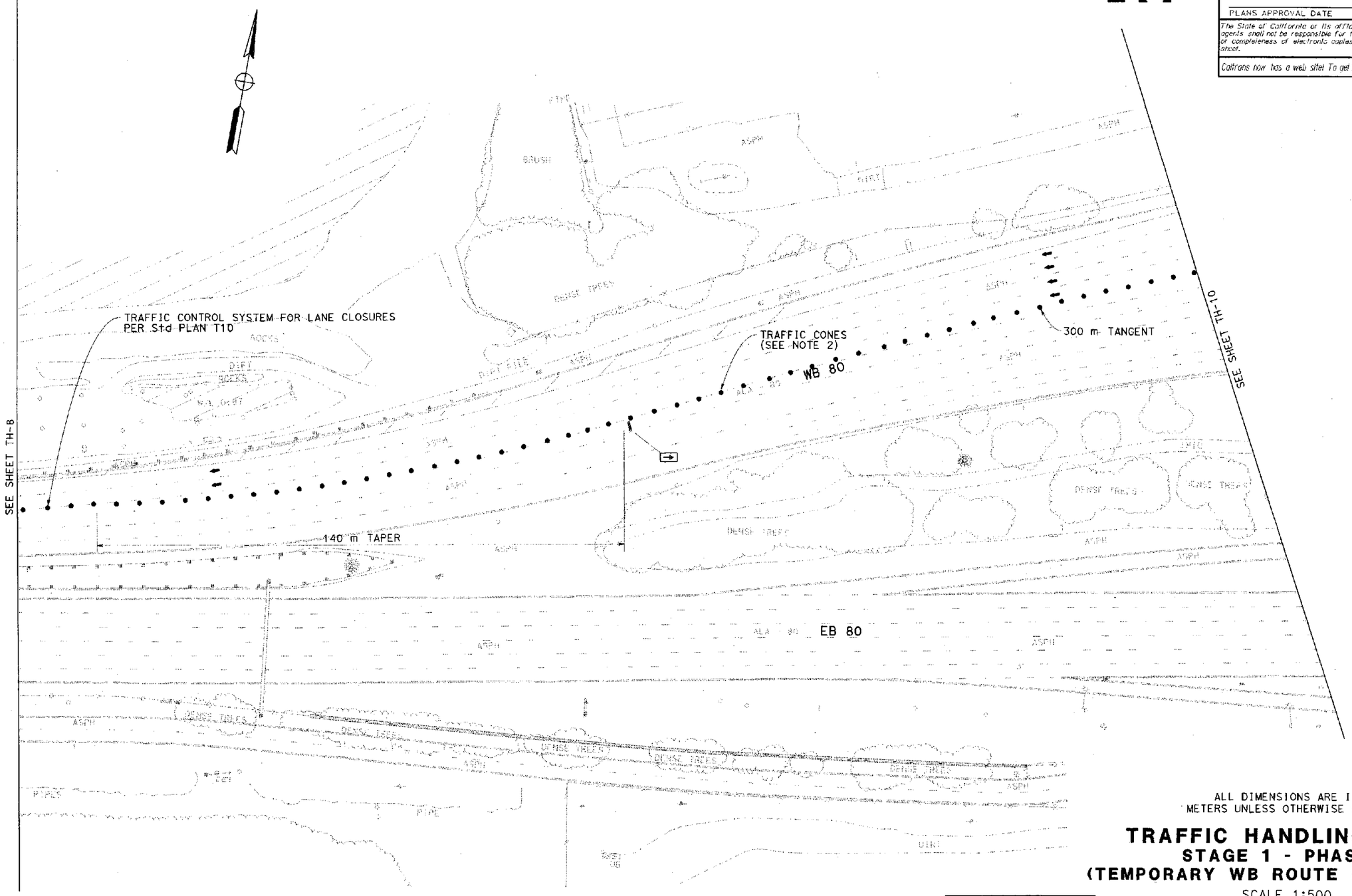

ALL DIMENSIONS ARE IN METERS UNLESS OTHERWISE SHOWN

TRAFFIC HANDLING PLAN
STAGE 1 - PHASE 1
(TEMPORARY WB ROUTE 80 CLOSURE)

SCALE 1:500

THIS PLAN ACCURATE FOR TRAFFIC HANDLING WORK ONLY.

FOR NOTES, ABBREVIATIONS &/OR LEGEND, SEE SHEET TH-8

TH-9

STATE OF CALIFORNIA - DEPARTMENT OF TRANSPORTATION
Caltrans
TOLL BRIDGE

PROJECT ENGINEER: J.E. GUTIERREZ

CALCULATED/DESIGNED BY | CHECKED BY

DATE | REVISED BY | DATE REVISED

LAST REVISION 07-30-08

DATE PLOTTED => 30-JUL-2008
TIME PLOTTED => 17:13

RELATIVE BORDER SCALE IS IN MILLIMETERS 0 20 40 60 80

USERNAME => s126849
DGN FILE => 401201md009.dgn

CU 04251

EA 0120L1

CONTRACT CHANGE ORDER NO. 47
SHEET 12 OF 33
10/30/08 04-012014

Caltrans Metric

DIST	COUNTY	ROUTE	KILOMETER POST TOTAL PROJECT	SHEET No.	TOTAL SHEETS
04	Ala	80	1.6/2.7	81CR0	643

REGISTERED CIVIL ENGINEER 7-28-08

Rafael A. Ravelo No. 68941 Exp. 12-31-09 CIVIL STATE OF CALIFORNIA REGISTERED PROFESSIONAL ENGINEER

PLANS APPROVAL DATE

The State of California or its officers or agents shall not be responsible for the accuracy or completeness of electronic copies of this plan sheet.

Caltrans now has a web site! To get to the web site, go to: http://www.dot.ca.gov

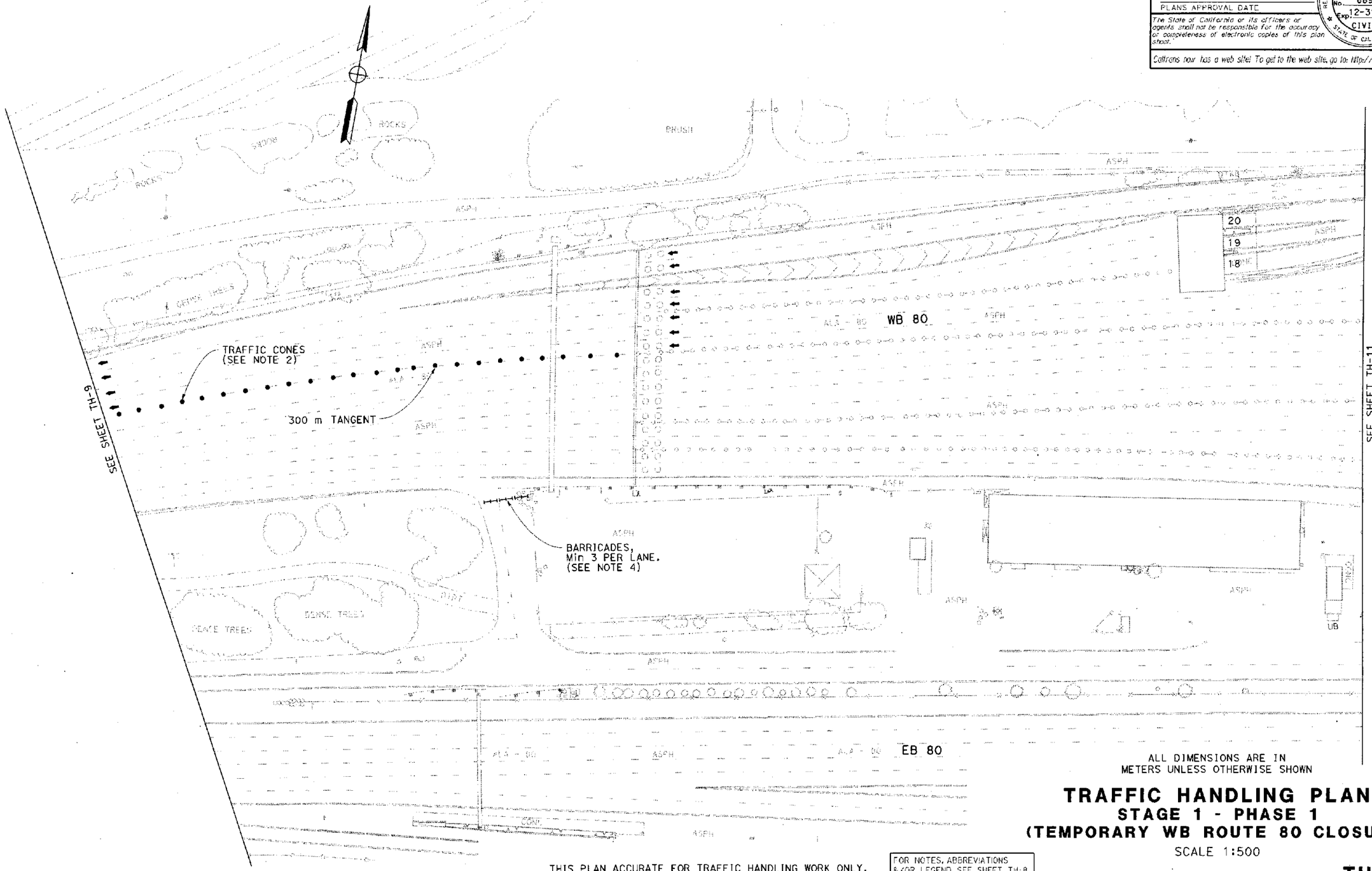

ALL DIMENSIONS ARE IN METERS UNLESS OTHERWISE SHOWN

TRAFFIC HANDLING PLAN
STAGE 1 - PHASE 1
(TEMPORARY WB ROUTE 80 CLOSURE)

SCALE 1:500

THIS PLAN ACCURATE FOR TRAFFIC HANDLING WORK ONLY.

FOR NOTES, ABBREVIATIONS &/OR LEGEND, SEE SHEET TH-8

TH-10

STATE OF CALIFORNIA - DEPARTMENT OF TRANSPORTATION
Caltrans
TOLL BRIDGE

PROJECT ENGINEER J.E.GUTIERREZ

CALCULATED/DESIGNED BY | CHECKED BY

DATE | REVISED BY | DATE REVISED

LAST REVISION 07-30-08

DATE PLOTTED => 30-JUL-2008
TIME PLOTTED => 7:14

RELATIVE BORDER SCALE IS IN MILLIMETERS 0 20 40 60 80

USERNAME => s126849
DGN FILE => 40120lmd010.cce

CU 04251

EA 0120L1

CONTRACT CHANGE ORDER NO. 47
SHEET 13 OF 33
10/30/08 04-0120L4

Caltrans Metric

DIST	COUNTY	ROUTE	KILOMETER POST TOTAL PROJECT	SHEET No	TOTAL SHEETS
04	Ala	80	1.6/2.7	81DR0	643

REGISTERED CIVIL ENGINEER 7-28-08

PLANS APPROVAL DATE

Rafael A. Ravelo No. 68941 Exp. 12-31-09 CIVIL STATE OF CALIFORNIA REGISTERED PROFESSIONAL ENGINEER

The State of California or its officers or agents shall not be responsible for the accuracy or completeness of electronic copies of this plan sheet.

Caltrans now has a web site! To get to the web site, go to: http://www.dot.ca.gov

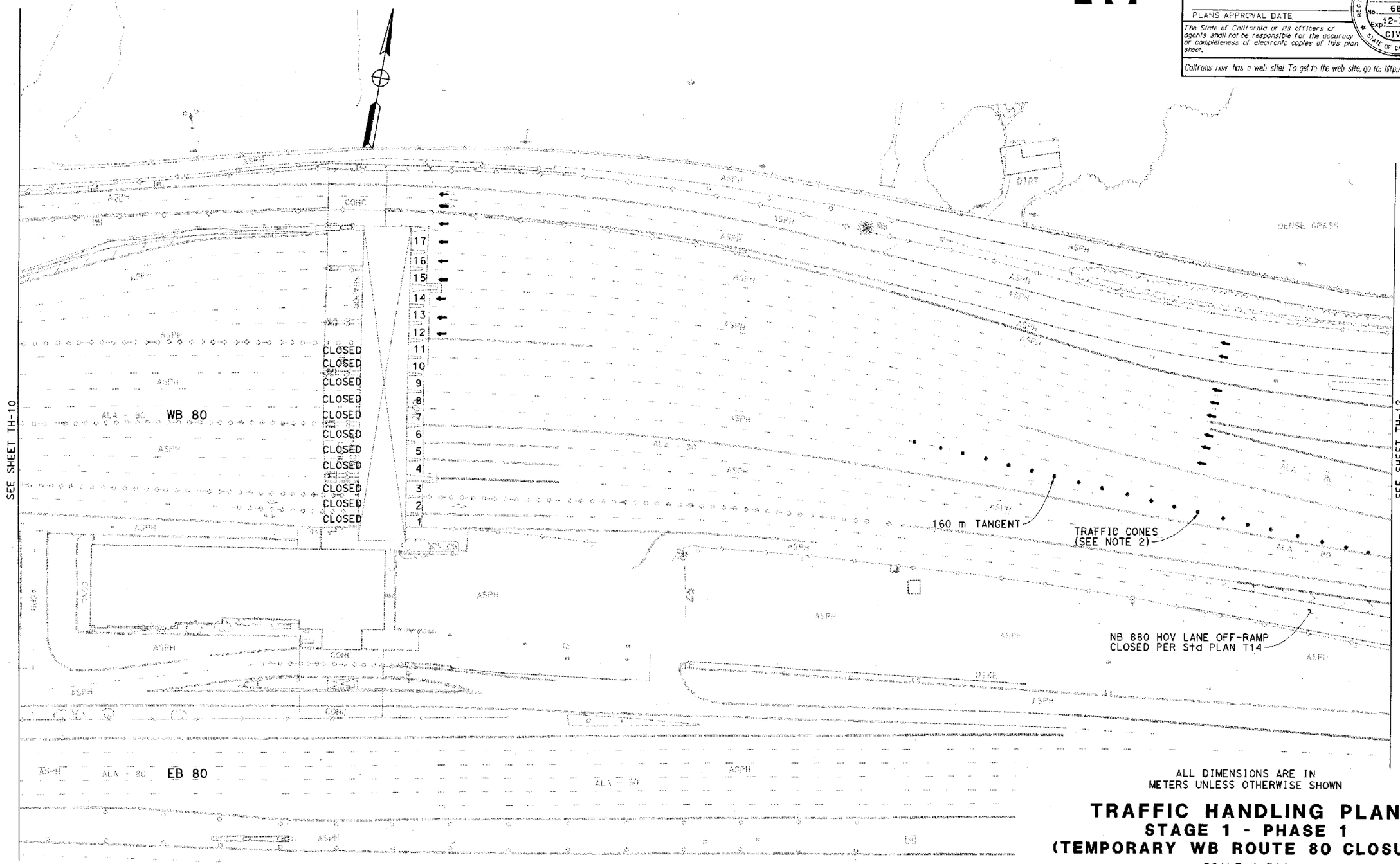

ALL DIMENSIONS ARE IN METERS UNLESS OTHERWISE SHOWN

TRAFFIC HANDLING PLAN
STAGE 1 - PHASE 1
(TEMPORARY WB ROUTE 80 CLOSURE)

SCALE 1:500

THIS PLAN ACCURATE FOR TRAFFIC HANDLING WORK ONLY.

FOR NOTES, ABBREVIATIONS &/OR LEGEND, SEE SHEET TH-8

TH-11

STATE OF CALIFORNIA - DEPARTMENT OF TRANSPORTATION
Caltrans
TOLL BRIDGE

PROJECT ENGINEER J.E.GUTIERREZ

CALCULATED/DESIGNED BY
CHECKED BY

DATE | REVISED BY | DATE REVISED

LAST REVISION 07-30-08
DATE PLOTTED => 30-JUL-2008
TIME PLOTTED => 7:16

RELATIVE BORDER SCALE IS IN MILLIMETERS 0 20 40 60 80

USERNAME => s126849
DGN FILE => 40120;md011.cco

CU 04251

EA 0120L1

CONTRACT CHANGE ORDER NO. 47
SHEET 14 OF 33
10/30/08 04-0120L4

Caltrans Metric

DIST	COUNTY	ROUTE	KILOMETER POST TOTAL PROJECT	SHEET No	TOTAL SHEETS
04	Ala	80	1.6/2.7	81ER0	643

REGISTERED CIVIL ENGINEER 7-28-08

PLANS APPROVAL DATE

Rafael A. Ravelo No. 68941 Exp. 12-31-09 CIVIL STATE OF CALIFORNIA REGISTERED PROFESSIONAL ENGINEER

The State of California or its officers or agents shall not be responsible for the accuracy or completeness of electronic copies of this plan sheet.

Caltrans now has a web site! To get to the web site, go to: http://www.dot.ca.gov

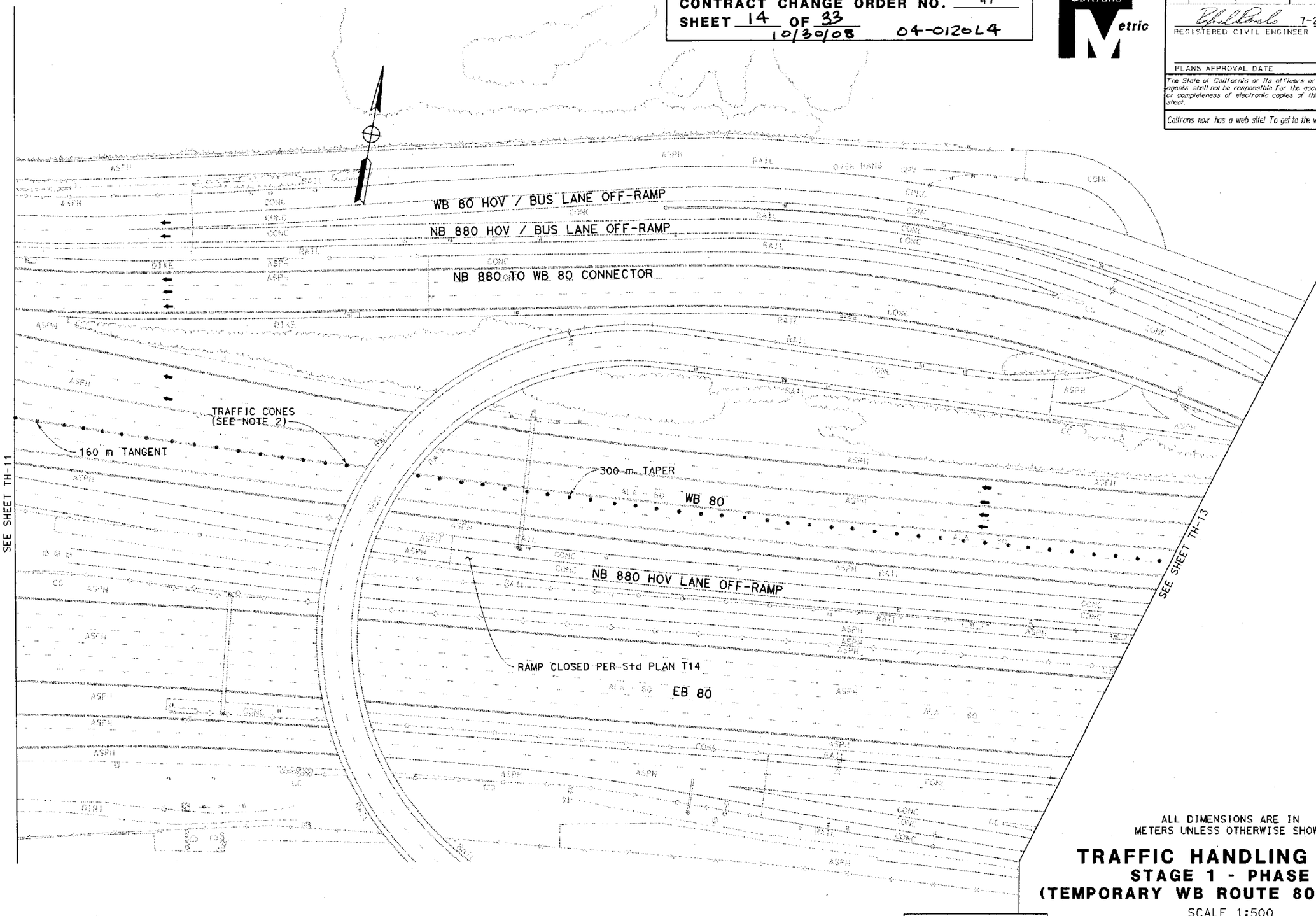

ALL DIMENSIONS ARE IN METERS UNLESS OTHERWISE SHOWN

TRAFFIC HANDLING PLAN
STAGE 1 - PHASE 1
(TEMPORARY WB ROUTE 80 CLOSURE)

SCALE 1:500

THIS PLAN ACCURATE FOR TRAFFIC HANDLING WORK ONLY.

FOR NOTES, ABBREVIATIONS &/OR LEGEND, SEE SHEET TH-8

TH-12

STATE OF CALIFORNIA - DEPARTMENT OF TRANSPORTATION
Caltrans
TOLL BRIDGE

PROJECT ENGINEER J.E. GUTIERREZ
CALCULATED/DESIGNED BY
CHECKED BY

DATE REVISED BY
DATE REVISED

LAST REVISION 07-30-08
DATE PLOTTED => 30-JUL-2008
TIME PLOTTED => 17:17

RELATIVE BORDER SCALE IS IN MILLIMETERS 0 20 40 60 80

USERNAME => s126849
DGN FILE => 40120lmd012.cso

CU 04251

EA 0120L1

CONTRACT CHANGE ORDER NO. 47
SHEET 15 OF 33
10/30/08
04-0120L4

Caltrans Metric

DIST	COUNTY	ROUTE	KILOMETER POST TOTAL PROJECT	SHEET No	TOTAL SHEETS
04	Ala	80	1.6/2.7	81FR0	643

REGISTERED CIVIL ENGINEER 7-28-08

PLANS APPROVAL DATE

REGISTERED PROFESSIONAL ENGINEER Rafael A. Ravelo No. 68941 Exp. 12-31-09 CIVIL STATE OF CALIFORNIA

The State of California or its officers or agents shall not be responsible for the accuracy or completeness of electronic copies of this plan sheet.

Caltrans now has a web site! To get to the web site, go to: http://www.dot.ca.gov

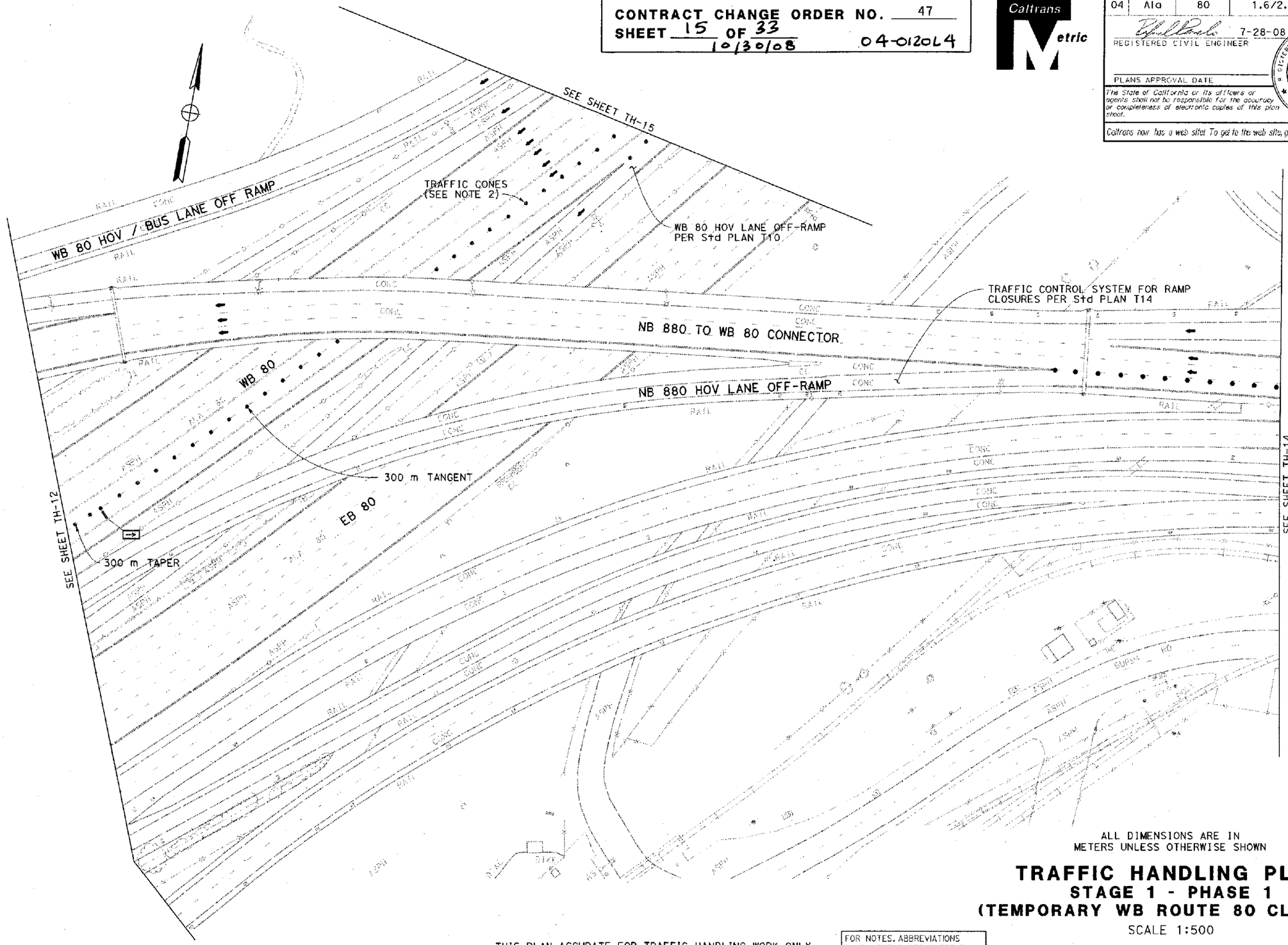

ALL DIMENSIONS ARE IN METERS UNLESS OTHERWISE SHOWN

TRAFFIC HANDLING PLAN
STAGE 1 - PHASE 1
(TEMPORARY WB ROUTE 80 CLOSURE)

SCALE 1:500

THIS PLAN ACCURATE FOR TRAFFIC HANDLING WORK ONLY.

FOR NOTES, ABBREVIATIONS &/OR LEGEND, SEE SHEET TH-8

TH-13

STATE OF CALIFORNIA - DEPARTMENT OF TRANSPORTATION
Caltrans
TOLL BRIDGE

PROJECT ENGINEER: J.E. GUTIERREZ

CALCULATED/DESIGNED BY
CHECKED BY

DATE | REVISED BY | DATE REVISED

LAST REVISION 07-30-08 DATE PLOTTED => 30-JUL-2008 TIME PLOTTED => 7:23

RELATIVE BORDER SCALE IS IN MILLIMETERS 0 20 40 60 80

USERNAME => s126849
DGN FILE => 0012014mc013.dgn

CU 04251

EA 0120L1

CONTRACT CHANGE ORDER NO. 47
SHEET 14 OF 33
10/30/08 04-012014

Caltrans Metric

DIST	COUNTY	ROUTE	KILOMETER POST TOTAL PROJECT	SHEET No.	TOTAL SHEETS
04	Ala	80	1.6/2.7	81GR0	643

REGISTERED CIVIL ENGINEER 7-28-08

PLANS APPROVAL DATE

REGISTERED PROFESSIONAL ENGINEER Rafael A. Ravelo No. 68941 Exp. 12-31-09 CIVIL STATE OF CALIFORNIA

The State of California or its officers or agents shall not be responsible for the accuracy or completeness of electronic copies of this plan sheet.

Caltrans now has a web site! To get to the web site, go to: http://www.dot.ca.gov

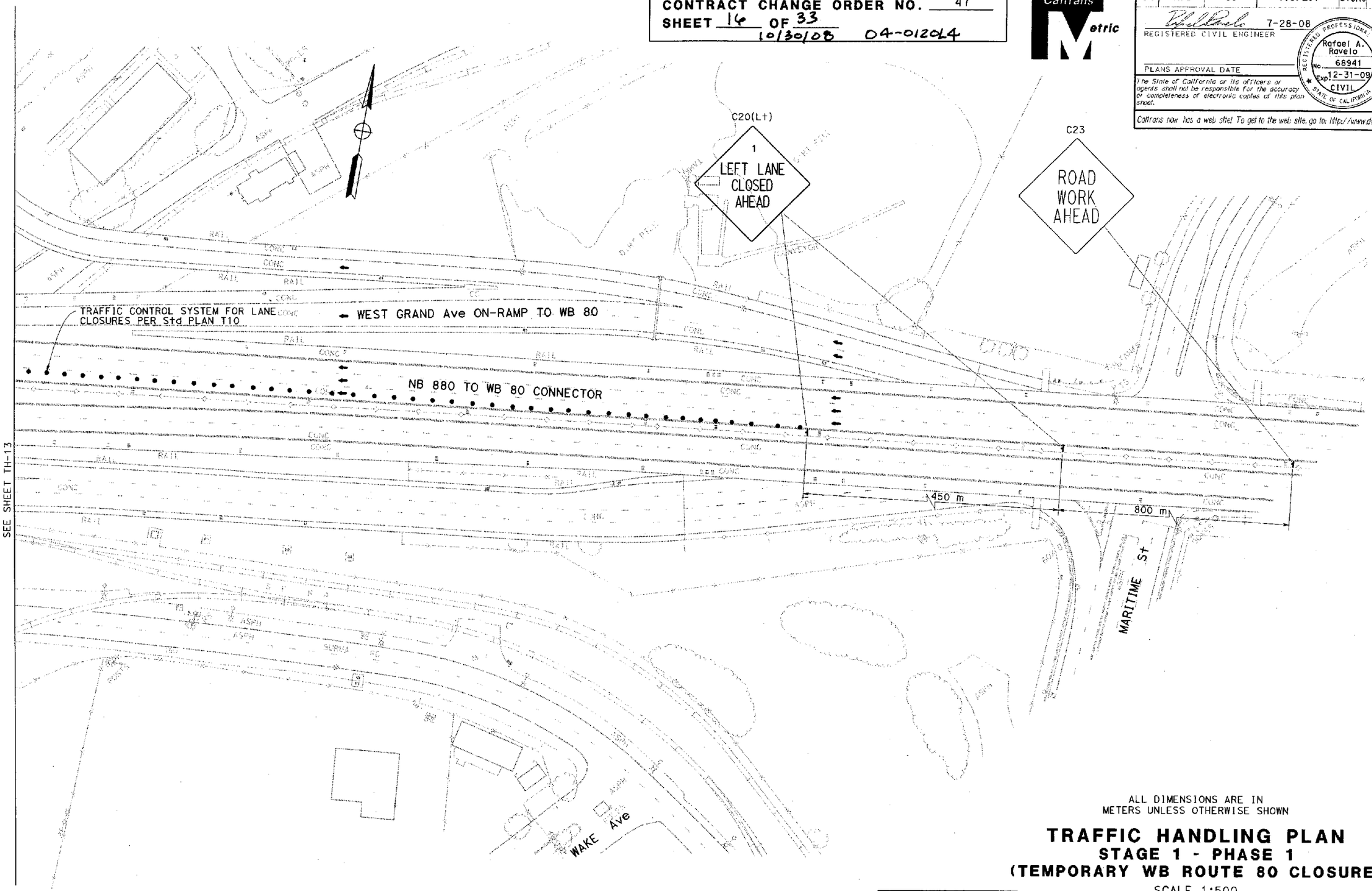

ALL DIMENSIONS ARE IN METERS UNLESS OTHERWISE SHOWN

TRAFFIC HANDLING PLAN
STAGE 1 - PHASE 1
(TEMPORARY WB ROUTE 80 CLOSURE)

SCALE 1:500

THIS PLAN ACCURATE FOR TRAFFIC HANDLING WORK ONLY.

FOR NOTES, ABBREVIATIONS &/OR LEGEND, SEE SHEET TH-8

TH-14

STATE OF CALIFORNIA - DEPARTMENT OF TRANSPORTATION
Caltrans
TOLL BRIDGE

PROJECT ENGINEER J.E.GUTIERREZ

CALCULATED/DESIGNED BY
CHECKED BY

DATE REVISED BY
DATE REVISED

LAST REVISION 07-30-08
DATE PLOTTED => 30-JUL-2008
TIME PLOTTED => 17:24

RELATIVE BORDER SCALE IS IN MILLIMETERS 0 20 40 60 80

USERNAME => s126849
DGN FILE => 401201md014.dgn

CU 04251

EA 0120L1

CONTRACT CHANGE ORDER NO. 47
SHEET 17 OF 33
10/30/08 04-012014

Caltrans Metric

DIST	COUNTY	ROUTE	KILOMETER POST TOTAL PROJECT	SHEET No	TOTAL SHEETS
04	Ala	80	1.6/2.7	81HR0	643

REGISTERED CIVIL ENGINEER 7-28-08

PLANS APPROVAL DATE

REGISTERED PROFESSIONAL ENGINEER Rafael A. Ravelo No. 68941 Exp. 12-31-09 CIVIL STATE OF CALIFORNIA

The State of California or its officers or agents shall not be responsible for the accuracy or completeness of electronic copies of this plan sheet.

Caltrans now has a web site! To get to the web site, go to: http://www.dot.ca.gov

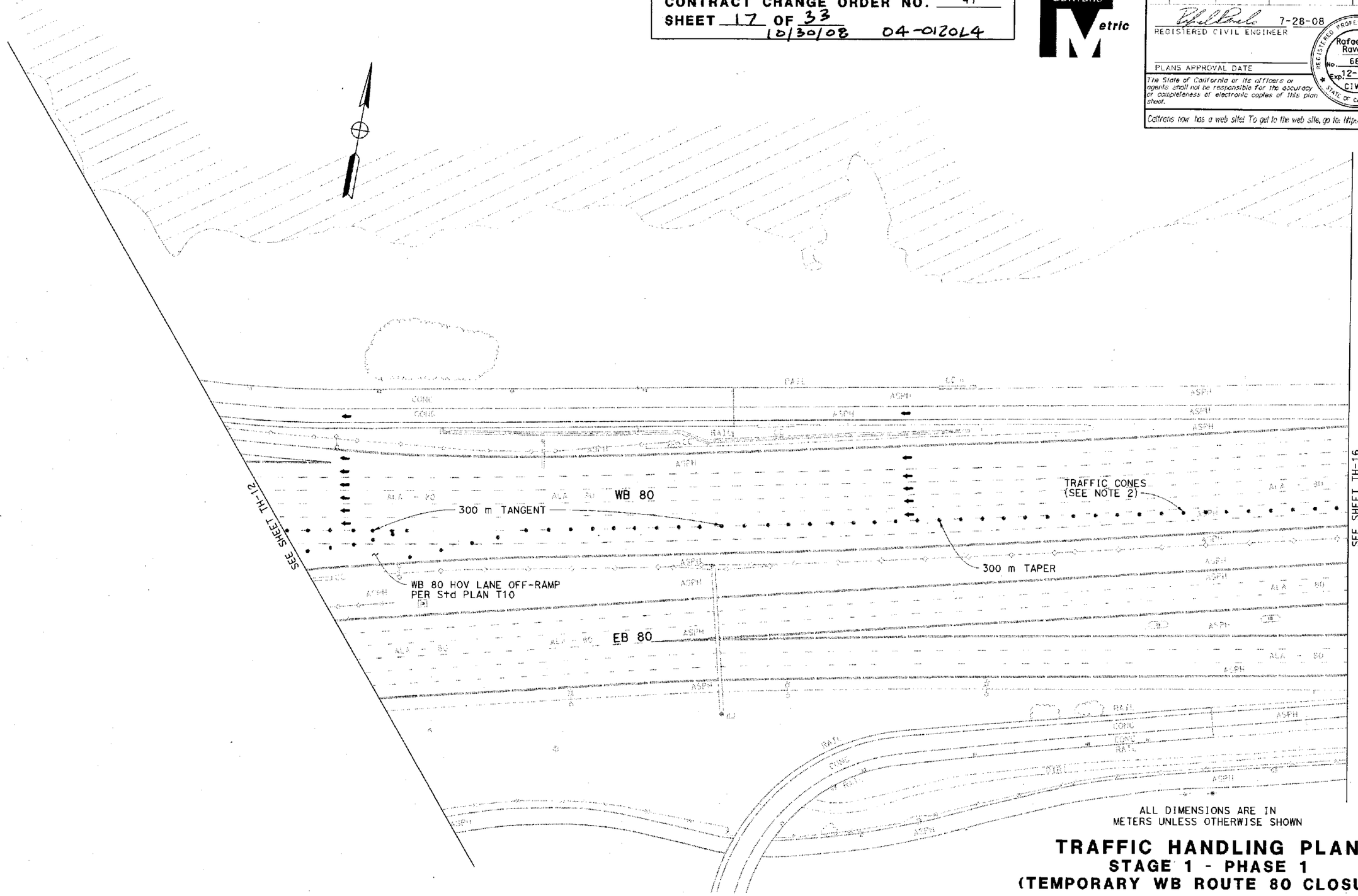

ALL DIMENSIONS ARE IN METERS UNLESS OTHERWISE SHOWN

TRAFFIC HANDLING PLAN
STAGE 1 - PHASE 1
(TEMPORARY WB ROUTE 80 CLOSURE)

SCALE 1:500

THIS PLAN ACCURATE FOR TRAFFIC HANDLING WORK ONLY.

FOR NOTES, ABBREVIATIONS &/OR LEGEND, SEE SHEET TH-8

TH-15

STATE OF CALIFORNIA - DEPARTMENT OF TRANSPORTATION
Caltrans
TOLL BRIDGE

PROJECT ENGINEER J.E.GUTIERREZ

CALCULATED/DESIGNED BY
CHECKED BY

DATE REVISED BY
DATE REVISED

LAST REVISION 07-30-08
DATE PLOTTED => 30-JUL-2008
TIME PLOTTED => 17:26

RELATIVE BORDER SCALE IS IN MILLIMETERS 0 20 40 60 80

USERNAME => s126849
DGN FILE => 40120imd015.cce

CU 04251

EA 0120L1

DIST	COUNTY	ROUTE	KILOMETER POST TOTAL PROJECT	SHEET No.	TOTAL SHEETS
04	Ala	80	1.6/2.7	81JR0	643

REGISTERED CIVIL ENGINEER 7-28-08

PLANS APPROVAL DATE

REGISTERED PROFESSIONAL ENGINEER Rafael A. Ravelo No. 68941 Exp. 12-31-09 CIVIL STATE OF CALIFORNIA

The State of California or its officers or agents shall not be responsible for the accuracy or completeness of electronic copies of this plan sheet.

Caltrans now has a web site! To get to the web site, go to: http://www.dot.ca.gov

CONTRACT CHANGE ORDER NO. 47
SHEET 18 OF 33
10/30/08 04-0120L4

Caltrans Metric

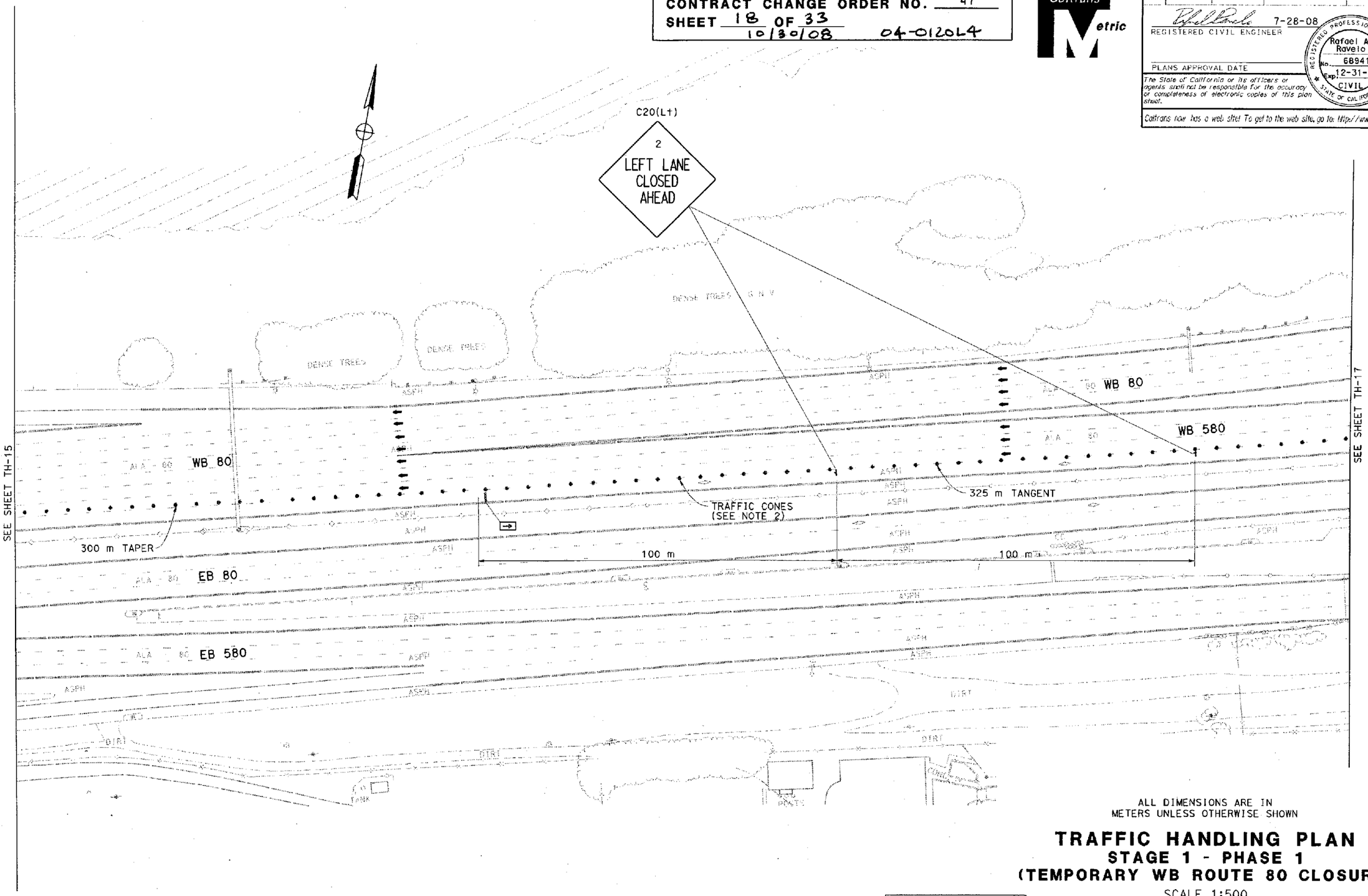

ALL DIMENSIONS ARE IN METERS UNLESS OTHERWISE SHOWN

TRAFFIC HANDLING PLAN
STAGE 1 - PHASE 1
(TEMPORARY WB ROUTE 80 CLOSURE)

SCALE 1:500

THIS PLAN ACCURATE FOR TRAFFIC HANDLING WORK ONLY.

FOR NOTES, ABBREVIATIONS &/OR LEGEND, SEE SHEET TH-8

TH-16

STATE OF CALIFORNIA - DEPARTMENT OF TRANSPORTATION
Caltrans
TOLL BRIDGE

PROJECT ENGINEER J.E. GUTIERREZ

CALCULATED/DESIGNED BY
CHECKED BY

DATE REVISED BY
DATE REVISED

LAST REVISION 07-30-08

DATE PLOTTED => 30-JUL-2008
TIME PLOTTED => 7:27

RELATIVE BORDER SCALE IS IN MILLIMETERS 0 20 40 60 80

USERNAME => s126849
DGN FILE => 40120lmd016.cco

CU 04251

EA 0120L1

CONTRACT CHANGE ORDER NO. 47
SHEET 19 OF 33
10/30/08 04-0120L4

Caltrans Metric

DIST	COUNTY	ROUTE	KILOMETER POST TOTAL PROJECT	SHEET NO	TOTAL SHEETS
04	Ala	80	1.6/2.7	81JR0	643

REGISTERED CIVIL ENGINEER 7-28-08

PLANS APPROVAL DATE

REGISTERED PROFESSIONAL ENGINEER Rafael A. Ravelo No. 68941 Exp. 12-31-09 CIVIL STATE OF CALIFORNIA

The State of California or its officers or agents shall not be responsible for the accuracy or completeness of electronic copies of this plan sheet.

Caltrans now has a web site! To get to the web site, go to: http://www.dot.ca.gov

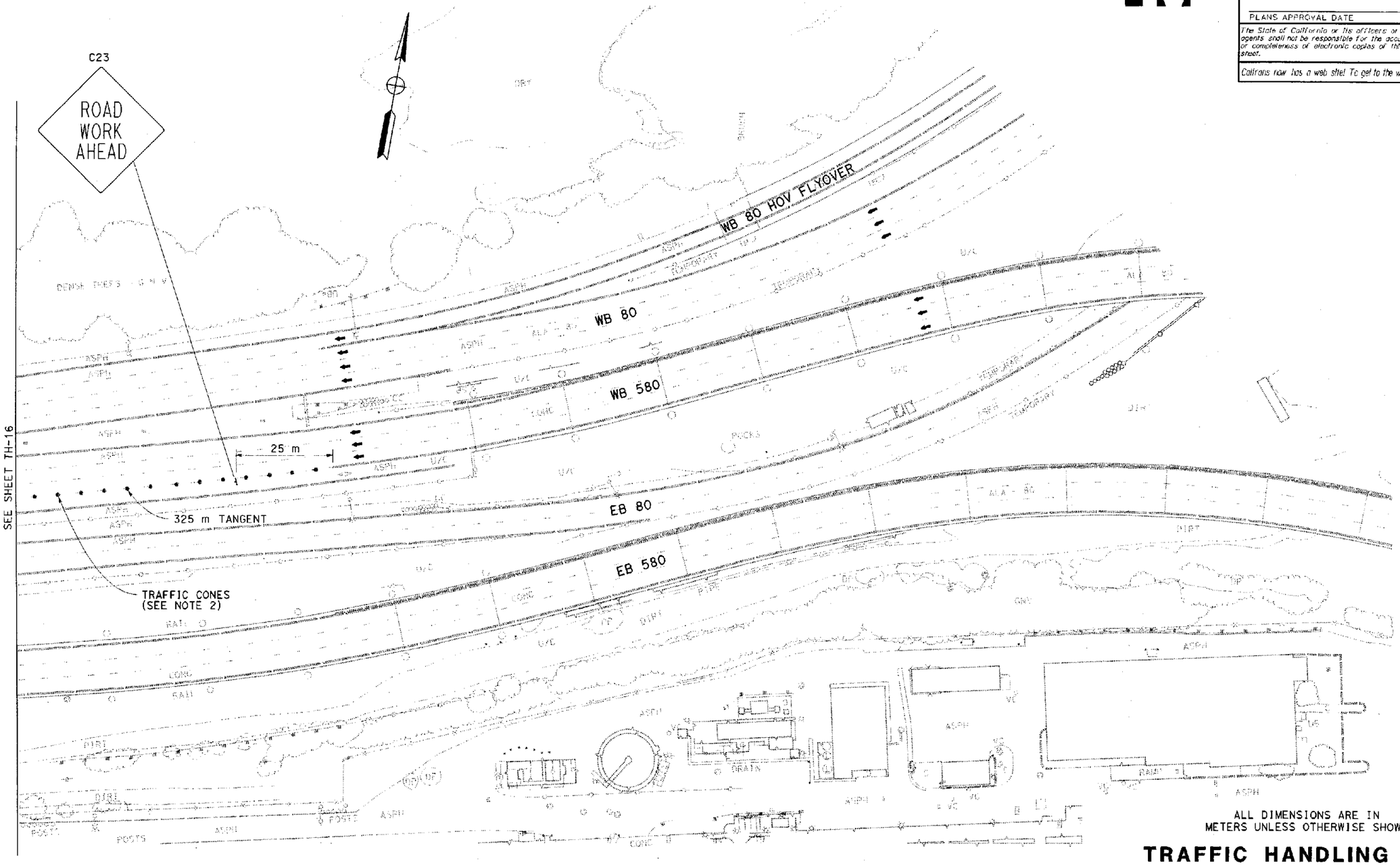

ALL DIMENSIONS ARE IN METERS UNLESS OTHERWISE SHOWN

TRAFFIC HANDLING PLAN
STAGE 1 - PHASE 1
(TEMPORARY WB ROUTE 80 CLOSURE)

SCALE 1:500

THIS PLAN ACCURATE FOR TRAFFIC HANDLING WORK ONLY.

FOR NOTES, ABBREVIATIONS &/OR LEGEND, SEE SHEET TH-8

TH-17

STATE OF CALIFORNIA - DEPARTMENT OF TRANSPORTATION
Caltrans
TOLL BRIDGE

PROJECT ENGINEER J.E.GUTIERREZ

CALCULATED/DESIGNED BY
CHECKED BY

DATE REVISED BY
DATE REVISED

LAST REVISION 07-30-08
DATE PLOTTED => 30-JUL-2008
TIME PLOTTED => 17:29

RELATIVE BORDER SCALE IS IN MILLIMETERS 0 20 40 60 80

USERNAME => s126349
DGN FILE => 401201mq017.cce

CU 04251

EA 0120L1

DIST	COUNTY	ROUTE	KILOMETER POST TOTAL PROJECT	SHEET No	TOTAL SHEETS
04	Ala	80	1.6/2.7	81KR0	643

REGISTERED CIVIL ENGINEER 7-28-08

PLANS APPROVAL DATE

REGISTERED PROFESSIONAL ENGINEER Rafael A. Ravela No. 68941 Exp. 12-31-09 CIVIL STATE OF CALIFORNIA

The State of California or its officers or agents shall not be responsible for the accuracy or completeness of electronic copies of this plan sheet.

Caltrans now has a web site! To get to the web site, go to: http://www.dot.ca.gov

CONTRACT CHANGE ORDER NO. 47
SHEET 20 OF 33
10/30/08 04-0120L4

Caltrans Metric

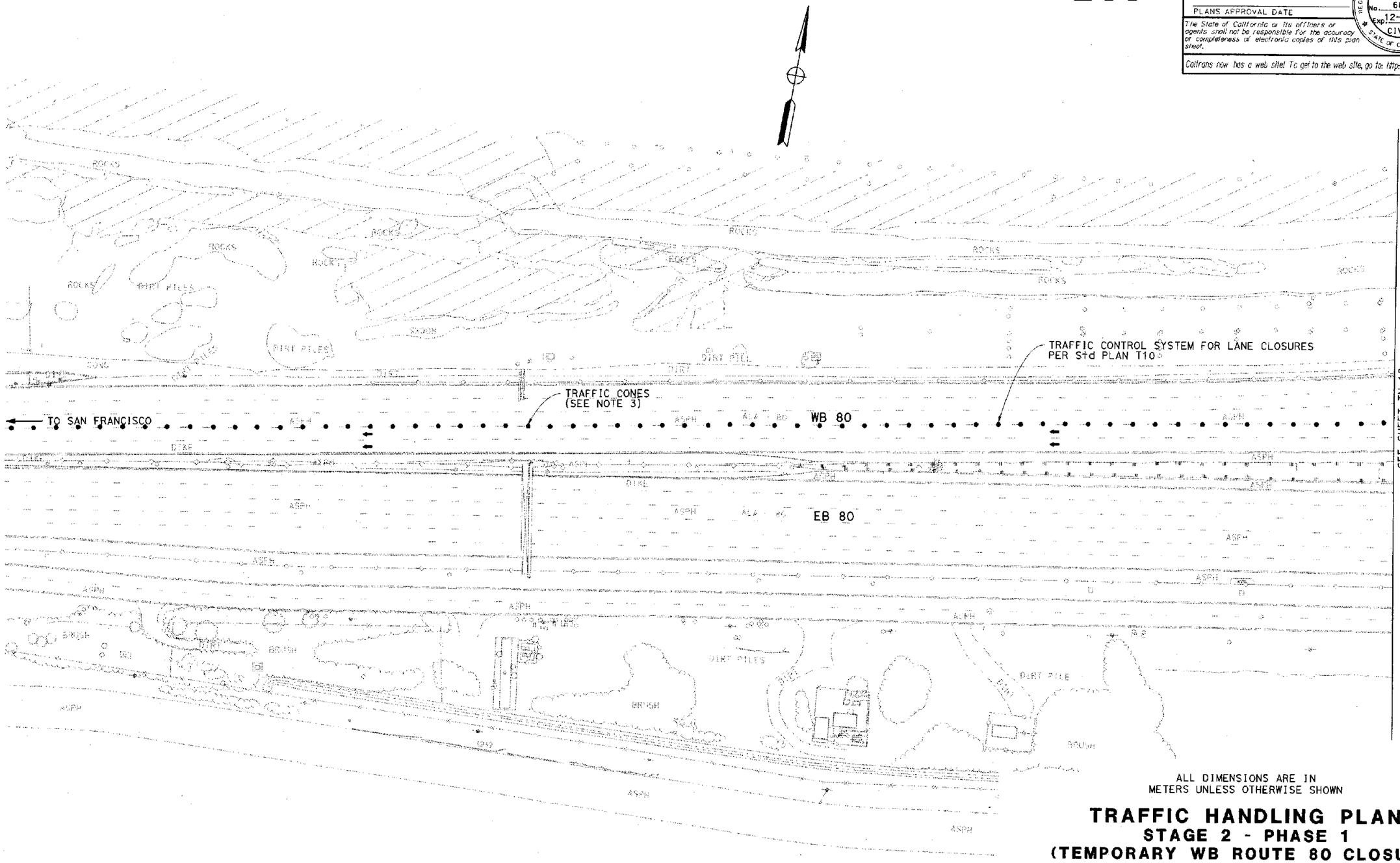

ALL DIMENSIONS ARE IN METERS UNLESS OTHERWISE SHOWN

TRAFFIC HANDLING PLAN
STAGE 2 - PHASE 1
(TEMPORARY WB ROUTE 80 CLOSURE)

SCALE 1:500

THIS PLAN ACCURATE FOR TRAFFIC HANDLING WORK ONLY.

FOR NOTES, ABBREVIATIONS &/OR LEGEND, SEE SHEET TH-8

TH-18

STATE OF CALIFORNIA - DEPARTMENT OF TRANSPORTATION
Caltrans
TOLL BRIDGE

PROJECT ENGINEER J.E.GUTIERREZ

CALCULATED/DESIGNED BY
CHECKED BY

DATE	REVISED BY	DATE REVISED

LAST REVISION 07-30-08

DATE PLOTTED => 30-JUL-2008
TIME PLOTTED => 17:30

RELATIVE BORDER SCALE IS IN MILLIMETERS 0 20 40 60 80

USERNAME => s126849
DGN FILE => 401201md018.cco

CU 04251

EA 0120L1

CONTRACT CHANGE ORDER NO. 47
SHEET 21 OF 33
10/30/08 04-0120L4

Caltrans Metric

DIST	COUNTY	ROUTE	KILOMETER POST TOTAL PROJECT	SHEET No.	TOTAL SHEETS
04	Ala	80	1.6/2.7	81LR0	643

REGISTERED CIVIL ENGINEER 7-28-08

PLANS APPROVAL DATE

Rafael A. Ravelo No. 68941 Exp. 12-31-09 CIVIL REGISTERED PROFESSIONAL ENGINEER STATE OF CALIFORNIA

The State of California or its officers or agents shall not be responsible for the accuracy or completeness of electronic copies of this plan sheet.

Caltrans now has a web site! To get to the web site, go to: http://www.dot.ca.gov

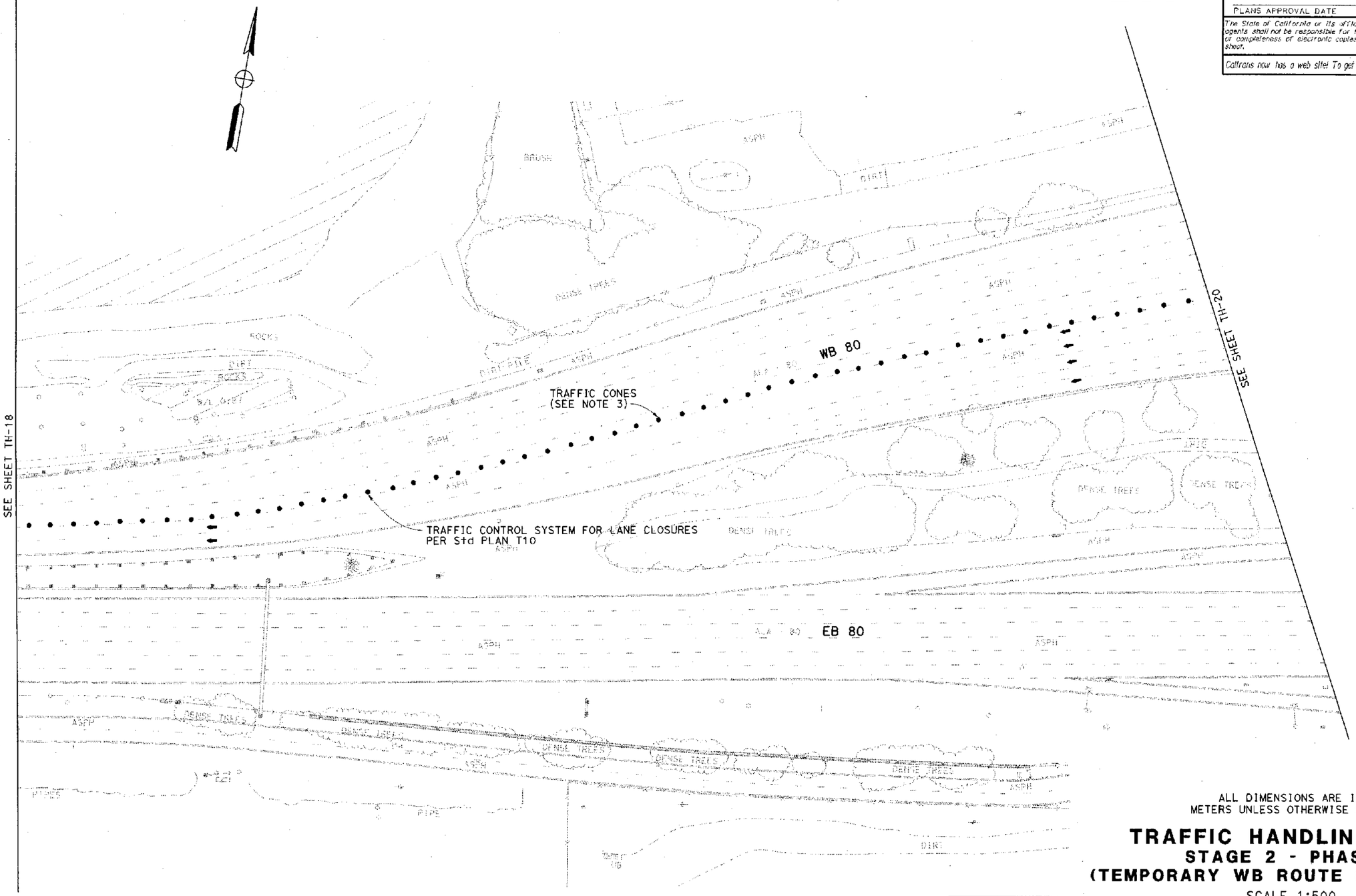

ALL DIMENSIONS ARE IN METERS UNLESS OTHERWISE SHOWN

TRAFFIC HANDLING PLAN
STAGE 2 - PHASE 1
(TEMPORARY WB ROUTE 80 CLOSURE)

SCALE 1:500

THIS PLAN ACCURATE FOR TRAFFIC HANDLING WORK ONLY.

FOR NOTES, ABBREVIATIONS &/OR LEGEND, SEE SHEET TH-8

TH-19

STATE OF CALIFORNIA - DEPARTMENT OF TRANSPORTATION
Caltrans
TOLL BRIDGE

PROJECT ENGINEER: J.E.GUTIERREZ

CALCULATED/DESIGNED BY | CHECKED BY | DATE | REVISED BY | DATE REVISED

LAST REVISION 07-30-08 | DATE PLOTTED => 30-JUL-2008 | TIME PLOTTED => 17:31

RELATIVE BORDER SCALE IS IN MILLIMETERS 0 20 40 60 80

USERNAME => s126849
DGN FILE => 401201mm019.cce

CU 04251 | EA 0120L1

CONTRACT CHANGE ORDER NO. 47
SHEET 22 OF 33
10/30/08 04-0120L4

Caltrans Metric

DIST	COUNTY	ROUTE	KILOMETER POST TOTAL PROJECT	SHEET No	TOTAL SHEETS
04	Ala	80	1.6/2.7	81MR0	643

REGISTERED CIVIL ENGINEER 7-28-08

PLANS APPROVAL DATE

Rafael A. Ravelo No. 68941 Exp. 12-31-09 CIVIL STATE OF CALIFORNIA REGISTERED PROFESSIONAL ENGINEER

The State of California or its officers or agents shall not be responsible for the accuracy or completeness of electronic copies of this plan sheet.

Caltrans now has a web site! To get to the web site, go to: http://www.dot.ca.gov

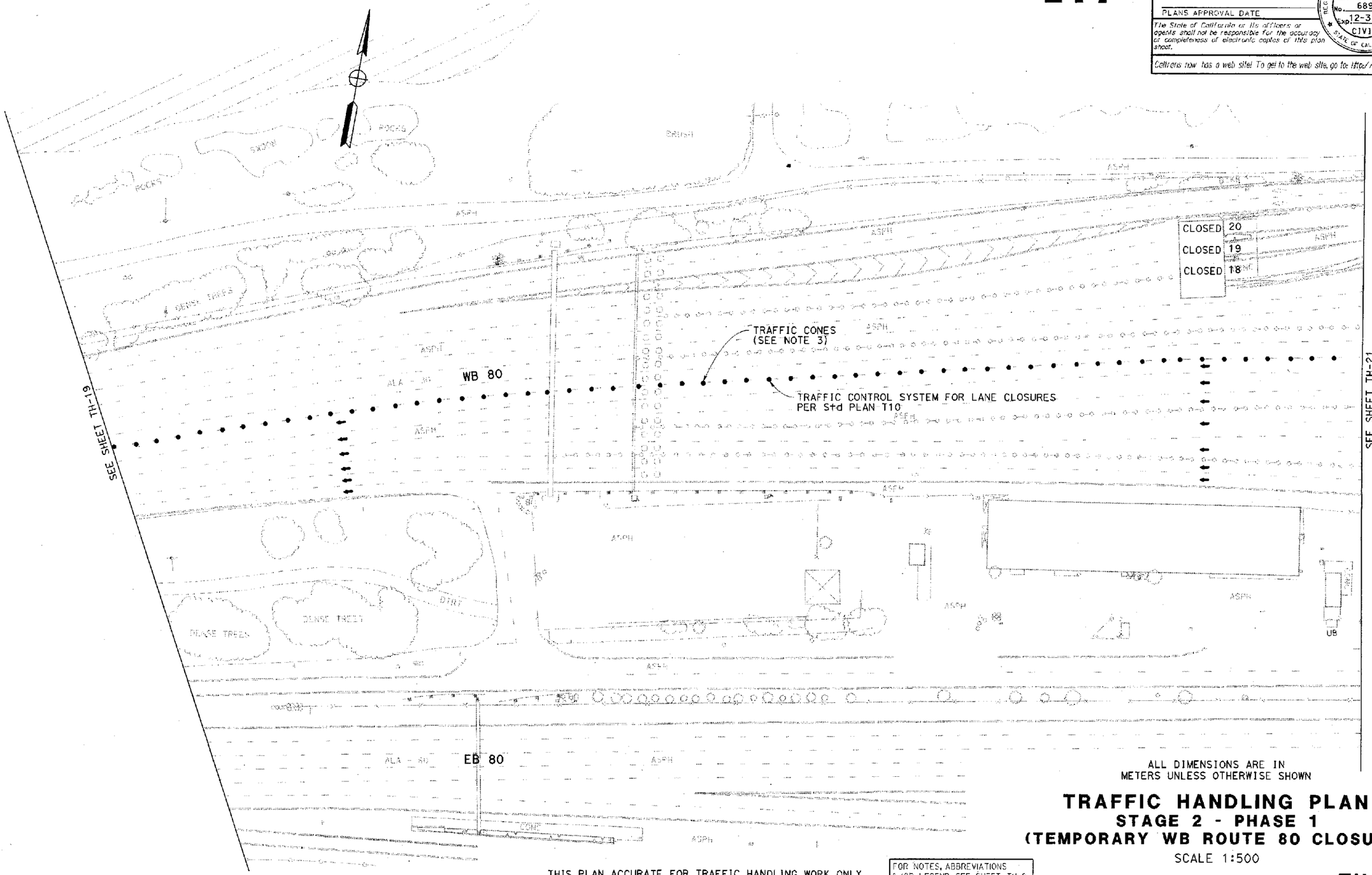

ALL DIMENSIONS ARE IN METERS UNLESS OTHERWISE SHOWN

TRAFFIC HANDLING PLAN
STAGE 2 - PHASE 1
(TEMPORARY WB ROUTE 80 CLOSURE)

SCALE 1:500

THIS PLAN ACCURATE FOR TRAFFIC HANDLING WORK ONLY.

FOR NOTES, ABBREVIATIONS &/OR LEGEND, SEE SHEET TH-8

TH-20

STATE OF CALIFORNIA - DEPARTMENT OF TRANSPORTATION
Caltrans TOLL BRIDGE

PROJECT ENGINEER J.E.GUTIERREZ

CALCULATED/DESIGNED BY
CHECKED BY

DATE REVISED BY
DATE REVISED

LAST REVISION 07-30-08 DATE PLOTTED => 30-JUL-2008 TIME PLOTTED => 17:37

RELATIVE BORDER SCALE IS IN MILLIMETERS 0 20 40 60 80

USERNAME => s126849
DGN FILE => 401201md120.dgn

CU 04251 EA 0120L1

CONTRACT CHANGE ORDER NO. 47
SHEET 23 OF 33
10/30/08 04-0120L4

Caltrans Metric

DIST	COUNTY	ROUTE	KILOMETER POST TOTAL PROJECT	SHEET No	TOTAL SHEETS
04	Ala	80	1.6/2.7	81NR0	643

REGISTERED CIVIL ENGINEER 7-28-08

PLANS APPROVAL DATE

Rafael A. Ravelo No. 68941 Exp. 12-31-09 CIVIL STATE OF CALIFORNIA REGISTERED PROFESSIONAL ENGINEER

The State of California or its officers or agents shall not be responsible for the accuracy or completeness of electronic copies of this plan sheet.

Caltrans now has a web site! To get to the web site, go to: http://www.dot.ca.gov

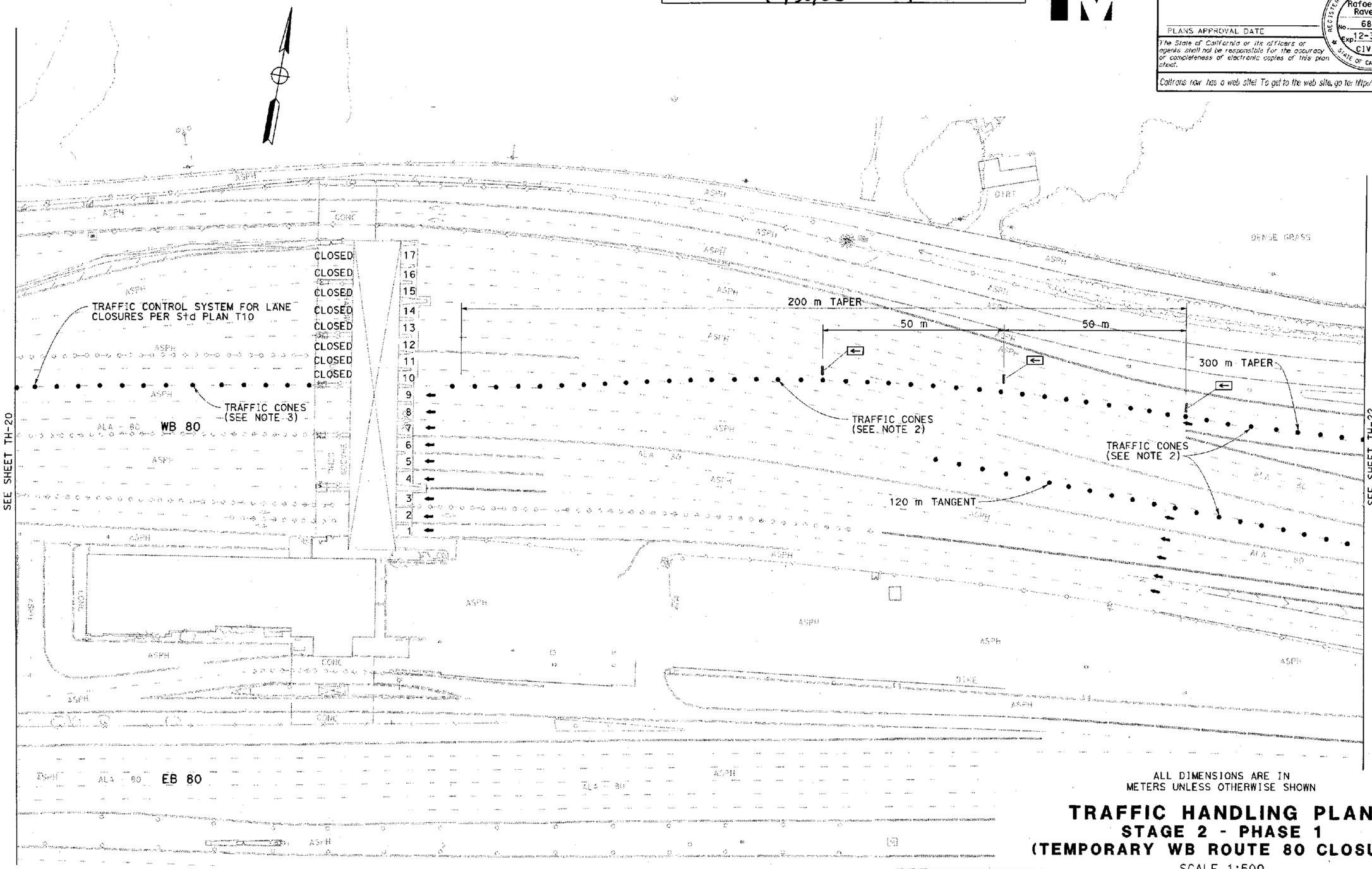

ALL DIMENSIONS ARE IN METERS UNLESS OTHERWISE SHOWN

TRAFFIC HANDLING PLAN
STAGE 2 - PHASE 1
(TEMPORARY WB ROUTE 80 CLOSURE)

SCALE 1:500

THIS PLAN ACCURATE FOR TRAFFIC HANDLING WORK ONLY.

FOR NOTES, ABBREVIATIONS &/OR LEGEND, SEE SHEET TH-8

TH-21

STATE OF CALIFORNIA - DEPARTMENT OF TRANSPORTATION
Caltrans
TOLL BRIDGE

PROJECT ENGINEER J.E.GUTIERREZ

CALCULATED/DESIGNED BY
CHECKED BY

DATE REVISED BY
DATE REVISED

LAST REVISION 07-30-08

DATE PLOTTED => 30-JUL-2008
TIME PLOTTED => 7:33

RELATIVE BORDER SCALE IS IN MILLIMETERS 0 20 40 60 80

USERNAME => s126849
DGN FILE => 40120md021.dgn

CU 04251

EA 0120L1

CONTRACT CHANGE ORDER NO. 47
SHEET 24 OF 33
10/30/08 04-012014

Caltrans Metric

DIST	COUNTY	ROUTE	KILOMETER POST TOTAL PROJECT	SHEET NO	TOTAL SHEETS
04	Ala	80	1.6/2.7	810R0	643

REGISTERED CIVIL ENGINEER 7-28-08

PLANS APPROVAL DATE

Rafael A. Ravelo No. 68941 Exp. 12-31-09 CIVIL STATE OF CALIFORNIA REGISTERED PROFESSIONAL ENGINEER

The State of California or its officers or agents shall not be responsible for the accuracy or completeness of electronic copies of this plan sheet.

Caltrans now has a web site! To get to the web site, go to: http://www.dot.ca.gov

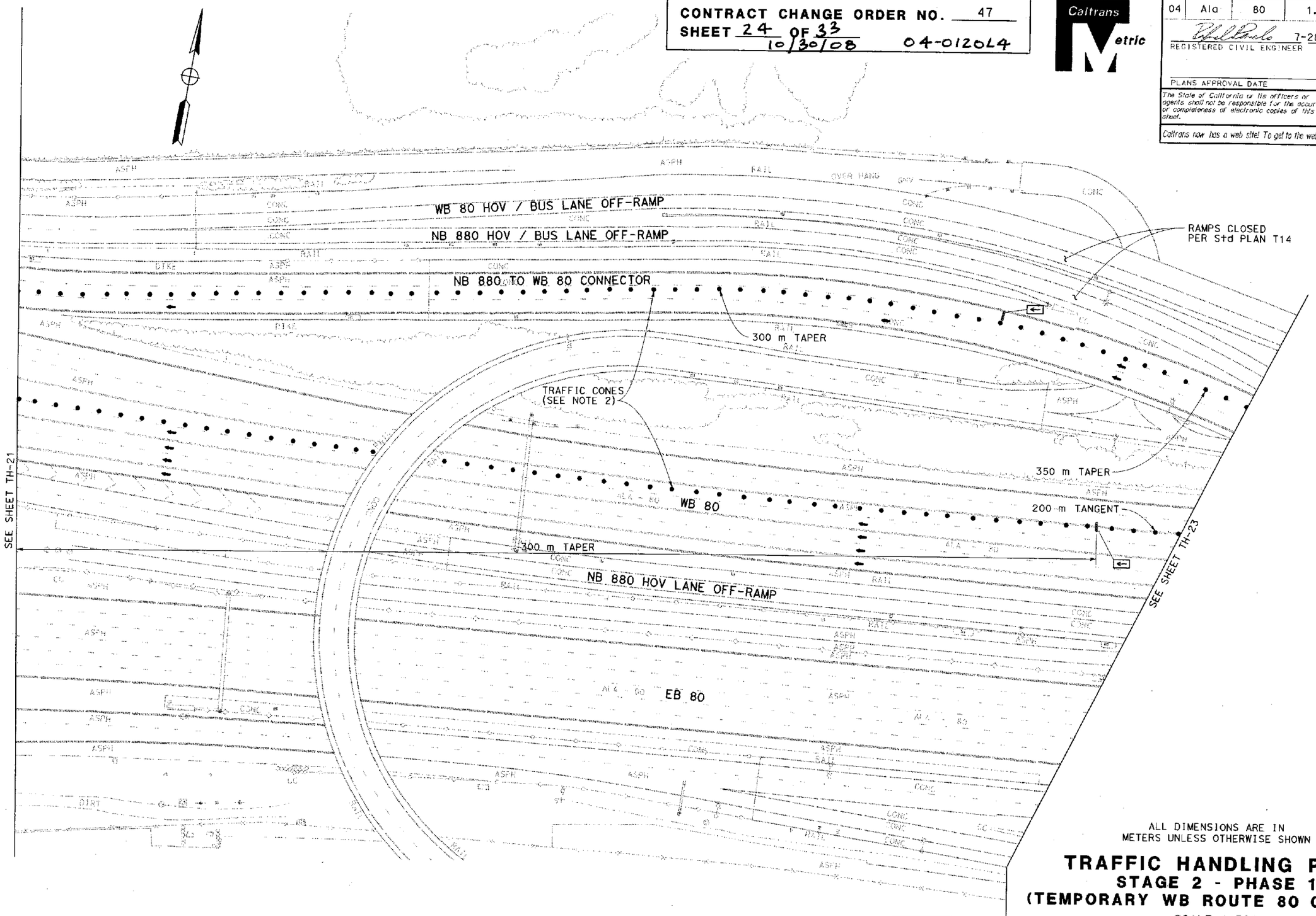

ALL DIMENSIONS ARE IN METERS UNLESS OTHERWISE SHOWN

TRAFFIC HANDLING PLAN
STAGE 2 - PHASE 1
(TEMPORARY WB ROUTE 80 CLOSURE)

SCALE 1:500

THIS PLAN ACCURATE FOR TRAFFIC HANDLING WORK ONLY.

FOR NOTES, ABBREVIATIONS &/OR LEGEND, SEE SHEET TH-8

TH-22

STATE OF CALIFORNIA - DEPARTMENT OF TRANSPORTATION
Caltrans
TOLL BRIDGE

PROJECT ENGINEER J.E. GUTIERREZ

CALCULATED/DESIGNED BY
CHECKED BY

DATE REVISED BY
DATE REVISED

LAST REVISION 07-31-08
DATE PLOTTED => 31-JUL-2008
TIME PLOTTED => 15:19

RELATIVE BORDER SCALE IS IN MILLIMETERS 0 20 40 60 80

USERNAME => s126849
DGN FILE => 401201md022.cce

CU 04251

EA 0120L1

CONTRACT CHANGE ORDER NO. 47
SHEET 25 OF 33
10/30/08 04-0120L4

Caltrans Metric

DIST	COUNTY	ROUTE	KILOMETER POST TOTAL PROJECT	SHEET No	TOTAL SHEETS
04	Ala	80	1.6/2.7	81PR0	643

REGISTERED CIVIL ENGINEER 7-28-08

PLANS APPROVAL DATE

REGISTERED PROFESSIONAL ENGINEER Rafael A. Ravelo No. 68941 Exp. 12-31-09 CIVIL STATE OF CALIFORNIA

The State of California or its officers or agents shall not be responsible for the accuracy or completeness of electronic copies of this plan sheet.

Caltrans now has a web site! To get to the web site, go to: http://www.dot.ca.gov

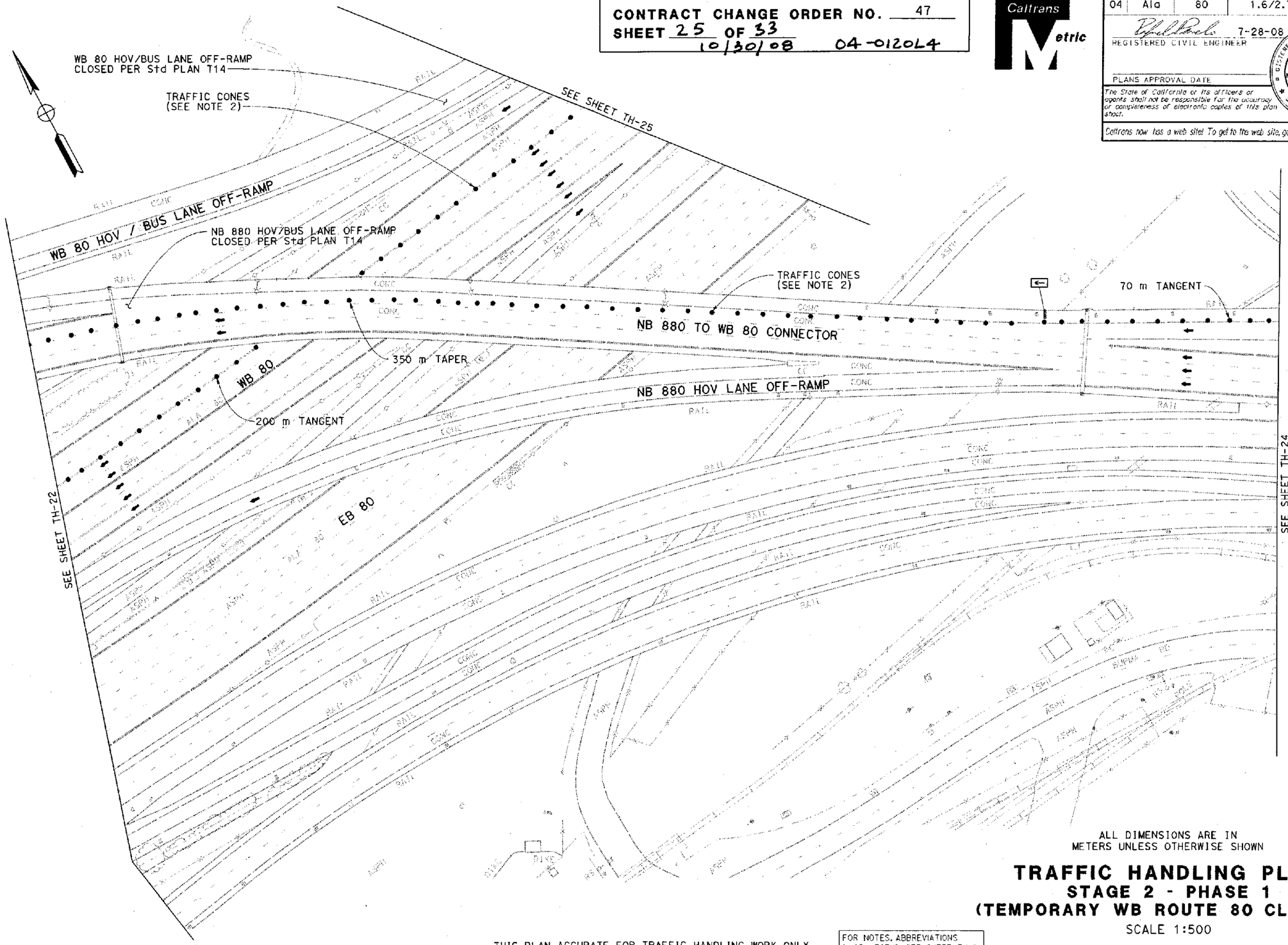

ALL DIMENSIONS ARE IN METERS UNLESS OTHERWISE SHOWN

TRAFFIC HANDLING PLAN
STAGE 2 - PHASE 1
(TEMPORARY WB ROUTE 80 CLOSURE)

SCALE 1:500

THIS PLAN ACCURATE FOR TRAFFIC HANDLING WORK ONLY.

FOR NOTES, ABBREVIATIONS &/OR LEGEND, SEE SHEET TH-8

TH-23

STATE OF CALIFORNIA - DEPARTMENT OF TRANSPORTATION
Caltrans
TOLL BRIDGE

PROJECT ENGINEER J.E.GUTIERREZ

CALCULATED/DESIGNED BY
CHECKED BY

DATE REVISED BY
DATE REVISED

LAST REVISION 07-30-08 DATE PLOTTED => 30-JUL-2008 TIME PLOTTED => 17:35

RELATIVE BORDER SCALE IS IN MILLIMETERS 0 20 40 60 80

USERNAME => s126849
DGN FILE => 401201mc023.cce

CU 04251

EA 0120L1

DIST	COUNTY	ROUTE	KILOMETER POST TOTAL PROJECT	SHEET No	TOTAL SHEETS
04	Ala	80	1.6/2.7	810R0	643

REGISTERED CIVIL ENGINEER 7-28-08

PLANS APPROVAL DATE

Rafael A. Ravelo No. 68941 Exp. 12-31-09 CIVIL STATE OF CALIFORNIA REGISTERED PROFESSIONAL ENGINEER

The State of California or its officers or agents shall not be responsible for the accuracy or completeness of electronic copies of this plan sheet.

Caltrans now has a web site! To get to the web site, go to: http://www.dot.ca.gov

CONTRACT CHANGE ORDER NO. 47
SHEET 26 OF 33
10/30/08 04-0120L4

Caltrans Metric

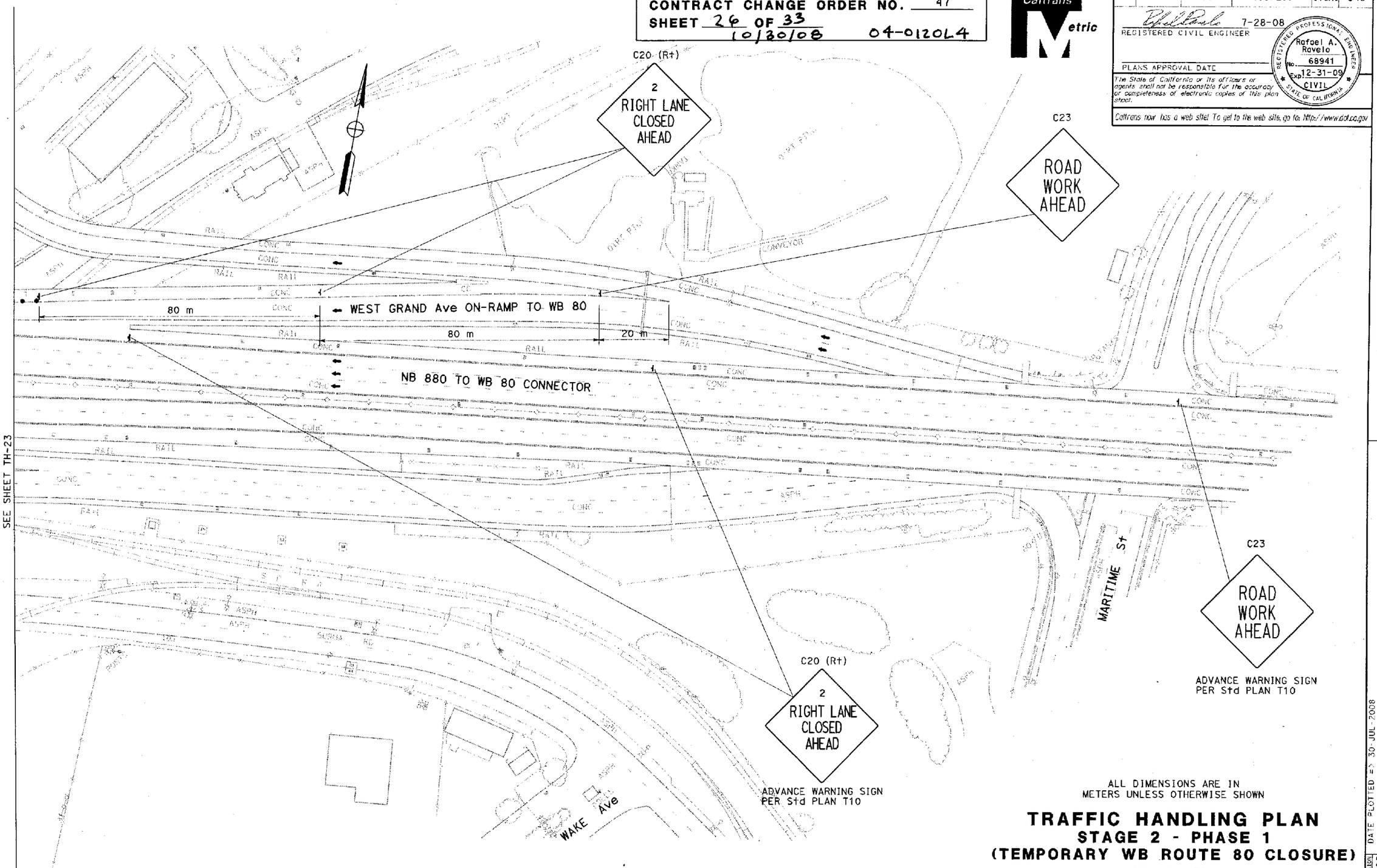

ALL DIMENSIONS ARE IN METERS UNLESS OTHERWISE SHOWN

TRAFFIC HANDLING PLAN
STAGE 2 - PHASE 1
(TEMPORARY WB ROUTE 80 CLOSURE)

SCALE 1:500

THIS PLAN ACCURATE FOR TRAFFIC HANDLING WORK ONLY.

FOR NOTES, ABBREVIATIONS &/OR LEGEND, SEE SHEET TH-8

TH-24

STATE OF CALIFORNIA - DEPARTMENT OF TRANSPORTATION
Caltrans
TOLL BRIDGE

PROJECT ENGINEER J.E.GUTIERREZ
CALCULATED/DESIGNED BY
CHECKED BY
DATE REVISED BY
DATE REVISED

LAST REVISION 07-30-08
DATE PLOTTED => 30-JUL-2008
TIME PLOTTED => 17:36

RELATIVE BORDER SCALE IS IN MILLIMETERS 0 20 40 60 80

USERNAME => s126849
DGN FILE => 4012Ol1md024.dgn

CU 04251

EA 0120L1

CONTRACT CHANGE ORDER NO. 47
SHEET 27 OF 33
10/30/08 04-0120L4

Caltrans Metric

DIST	COUNTY	ROUTE	KILOMETER POST TOTAL PROJECT	SHEET No.	TOTAL SHEETS
04	Ala	80	1.6/2.7	81RR0	643

REGISTERED CIVIL ENGINEER 7-28-08

PLANS APPROVAL DATE

Rafael A. Ravelo No. 68941 Exp. 12-31-09 CIVIL STATE OF CALIFORNIA REGISTERED PROFESSIONAL ENGINEER

The State of California or its officers or agents shall not be responsible for the accuracy or completeness of electronic copies of this plan sheet.

Caltrans now has a web site! To get to the web site, go to: http://www.dot.ca.gov

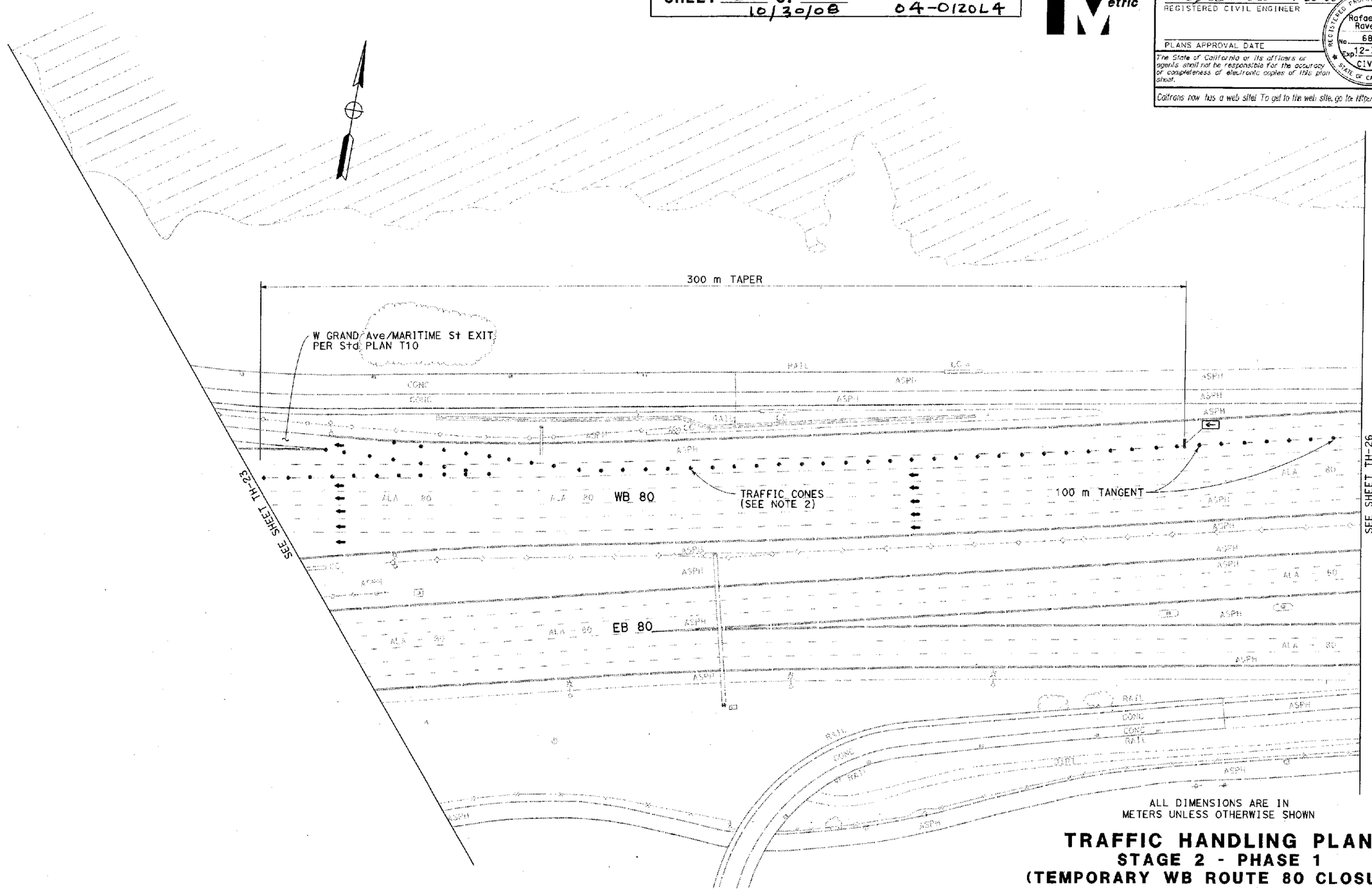

ALL DIMENSIONS ARE IN METERS UNLESS OTHERWISE SHOWN

TRAFFIC HANDLING PLAN
STAGE 2 - PHASE 1
(TEMPORARY WB ROUTE 80 CLOSURE)

SCALE 1:500

THIS PLAN ACCURATE FOR TRAFFIC HANDLING WORK ONLY.

FOR NOTES, ABBREVIATIONS &/OR LEGEND, SEE SHEET TH-8

TH-25

DATE	REVISED BY	DATE REVISED

CALCULATED/DESIGNED BY
CHECKED BY

PROJECT ENGINEER J.E.GUTIERREZ

STATE OF CALIFORNIA - DEPARTMENT OF TRANSPORTATION
Caltrans
TOLL BRIDGE

LAST REVISION 07-31-08
DATE PLOTTED => 31-JUL-2008
TIME PLOTTED => 15:22

RELATIVE BORDER SCALE IS IN MILLIMETERS 0 20 40 60 80
USERNAME => s126849
DGN FILE => 40120lmg025.cgo
CU 04251
EA 0120L1

CONTRACT CHANGE ORDER NO. 47
SHEET 28 OF 33
10/30/08 04-0120L4

Caltrans Metric

DIST	COUNTY	ROUTE	KILOMETER POST TOTAL PROJECT	SHEET No	TOTAL SHEETS
04	Ala	80	1.6/2.7	81SR0	643

REGISTERED CIVIL ENGINEER 7-28-08

PLANS APPROVAL DATE

REGISTERED PROFESSIONAL ENGINEER Rafael A. Ravelo No. 68941 Exp. 12-31-09 CIVIL STATE OF CALIFORNIA

The State of California or its officers or agents shall not be responsible for the accuracy or completeness of electronic copies of this plan sheet.

Caltrans now has a web site! To get to the web site, go to: http://www.dot.ca.gov

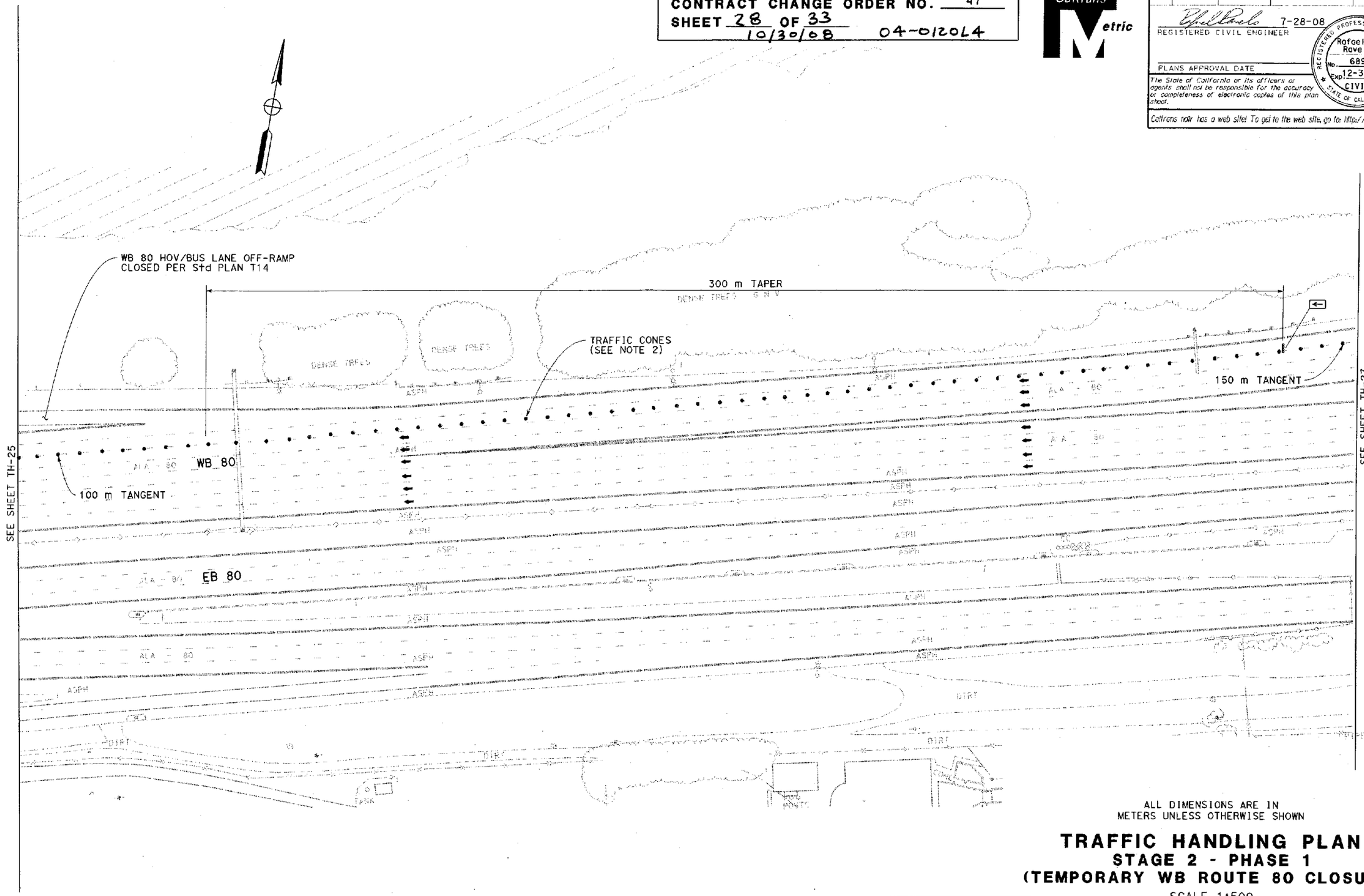

ALL DIMENSIONS ARE IN METERS UNLESS OTHERWISE SHOWN

TRAFFIC HANDLING PLAN
STAGE 2 - PHASE 1
(TEMPORARY WB ROUTE 80 CLOSURE)

SCALE 1:500

THIS PLAN ACCURATE FOR TRAFFIC HANDLING WORK ONLY.

FOR NOTES, ABBREVIATIONS &/OR LEGEND, SEE SHEET TH-8

TH-26

DATE	REVISED BY	DATE REVISED

CALCULATED/DESIGNED BY
CHECKED BY

PROJECT ENGINEER J.E.GUTIERREZ

STATE OF CALIFORNIA - DEPARTMENT OF TRANSPORTATION
Caltrans TOLL BRIDGE

LAST REVISION 07-31-08
DATE PLOTTED => 31-JUL-2008
TIME PLOTTED => 15:24

RELATIVE BORDER SCALE IS IN MILLIMETERS 0 20 40 60 80

USERNAME => s126849
DGN FILE => 40120lmd026.cce

CU 04251

EA 0120L1

DIST	COUNTY	ROUTE	KILOMETER POST TOTAL PROJECT	SHEET No	TOTAL SHEETS
04	Ala	80	1.6/2.7	81TR0	643

REGISTERED CIVIL ENGINEER 7-28-08

PLANS APPROVAL DATE

Rafael A. Ravelo No. 68941 Exp. 12-31-09 CIVIL STATE OF CALIFORNIA REGISTERED PROFESSIONAL ENGINEER

The State of California or its officers or agents shall not be responsible for the accuracy or completeness of electronic copies of this plan sheet.

Caltrans now has a web site! To get to the web site, go to: http://www.dot.ca.gov

CONTRACT CHANGE ORDER NO. 47
SHEET 29 OF 33
10/30/08 04-0120L4

Caltrans Metric

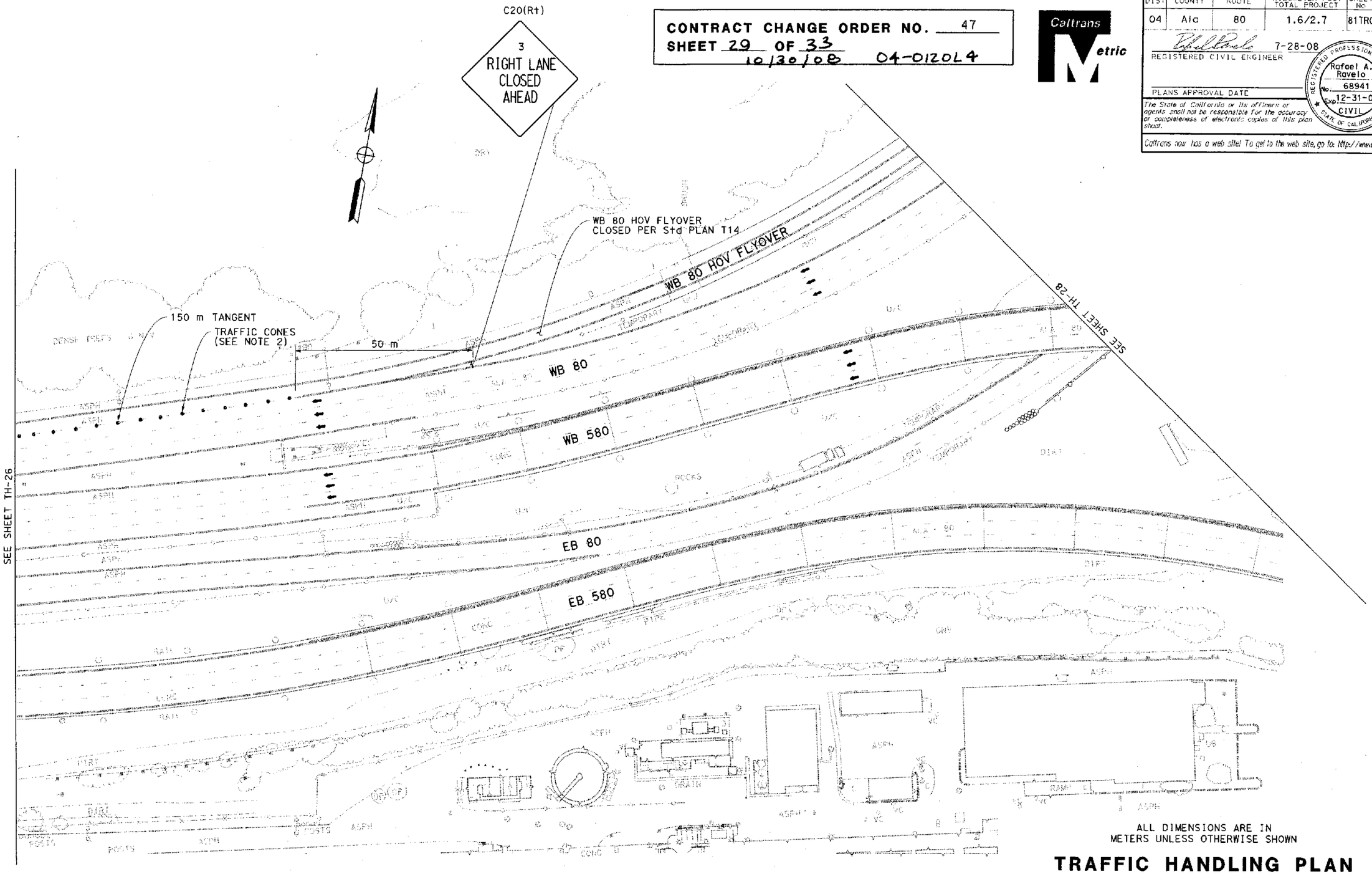

ALL DIMENSIONS ARE IN METERS UNLESS OTHERWISE SHOWN

TRAFFIC HANDLING PLAN
STAGE 2 - PHASE 1
(TEMPORARY WB ROUTE 80 CLOSURE)

SCALE 1:500

THIS PLAN ACCURATE FOR TRAFFIC HANDLING WORK ONLY.

FOR NOTES, ABBREVIATIONS &/OR LEGEND, SEE SHEET TH-8

TH-27

STATE OF CALIFORNIA - DEPARTMENT OF TRANSPORTATION
Caltrans
TOLL BRIDGE

PROJECT ENGINEER J.E. GUTIERREZ

CALCULATED/DESIGNED BY
CHECKED BY

DATE REVISED BY
DATE REVISED

LAST REVISION 07-31-08
DATE PLOTTED => 31-JUL-2008
TIME PLOTTED => 08:51

RELATIVE BORDER SCALE IS IN MILLIMETERS 0 20 40 60 80

USERNAME => s126849
DGN FILE => 40120lmq027.cco

CU 04251

EA 0120L1

DIST	COUNTY	ROUTE	KILOMETER POST TOTAL PROJECT	SHEET NO.	TOTAL SHEETS
04	Ala	80	1.6/2.7	81UR0	643

REGISTERED CIVIL ENGINEER 7-28-08

PLANS APPROVAL DATE

Rafael A. Ravelo No. 68941 Exp. 12-31-09 CIVIL STATE OF CALIFORNIA REGISTERED PROFESSIONAL ENGINEER

The State of California or its officers or agents shall not be responsible for the accuracy or completeness of electronic copies of this plan sheet.

Caltrans now has a web site! To go to the web site, go to: http://www.dot.ca.gov

CONTRACT CHANGE ORDER NO. 47
SHEET 30 OF 33
10/30/08 04-0120L4

Caltrans Metric

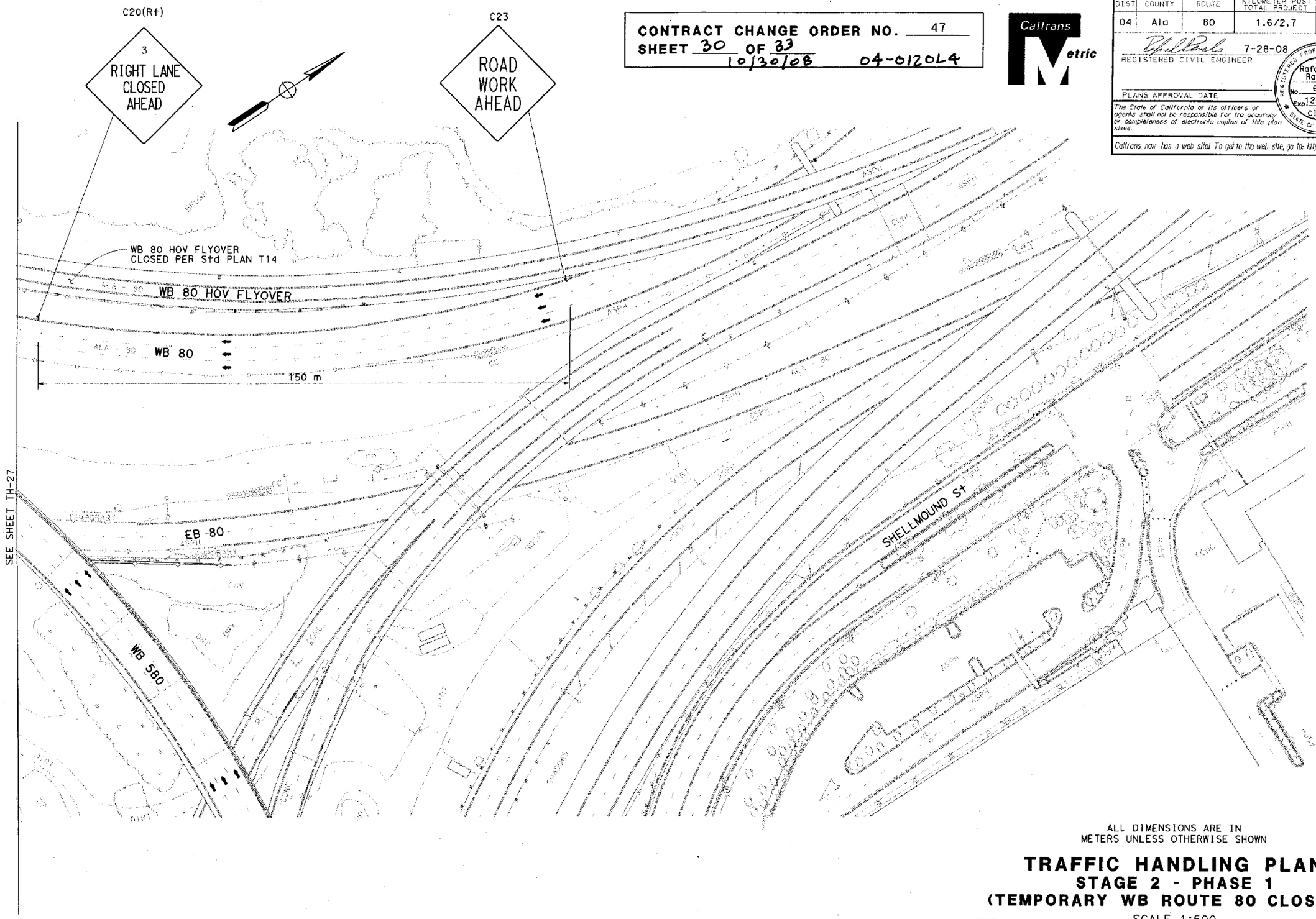

ALL DIMENSIONS ARE IN METERS UNLESS OTHERWISE SHOWN

TRAFFIC HANDLING PLAN
STAGE 2 - PHASE 1
(TEMPORARY WB ROUTE 80 CLOSURE)

SCALE 1:500

THIS PLAN ACCURATE FOR TRAFFIC HANDLING WORK ONLY.

FOR NOTES, ABBREVIATIONS &/OR LEGEND, SEE SHEET TH-8

TH-28

STATE OF CALIFORNIA - DEPARTMENT OF TRANSPORTATION
Caltrans
TOLL BRIDGE

PROJECT ENGINEER: J.E.GUTIERREZ

CALCULATED/DESIGNED BY
CHECKED BY

DATE REVISED BY
DATE REVISED

LAST REVISION 07-31-08
DATE PLOTTED => 3-JUL-2008
TIME PLOTTED => 08:52

RELATIVE BORDER SCALE IS IN MILLIMETERS 0 20 40 60 80

USERNAME => s176849
DGN FILE => 40120lmd028.cco

CU 04251

EA 0120L1

DIST	COUNTY	ROUTE	KILOMETER POST TOTAL PROJECT	SHEET No	TOTAL SHEETS
04	Ala	80	1.6/2.7	81WR0	643

REGISTERED CIVIL ENGINEER 7-28-08

PLANS APPROVAL DATE

REGISTERED PROFESSIONAL ENGINEER Rafael A. Ravelo No. 68941 Exp. 12-31-09 CIVIL STATE OF CALIFORNIA

The State of California or its officers or agents shall not be responsible for the accuracy or completeness of electronic copies of this plan sheet.

Caltrans now has a web site! To get to the web site, go to: http://www.dot.ca.gov

CONTRACT CHANGE ORDER NO. 47
SHEET 31 OF 33
10/30/08 04-0120L4

Caltrans Metric

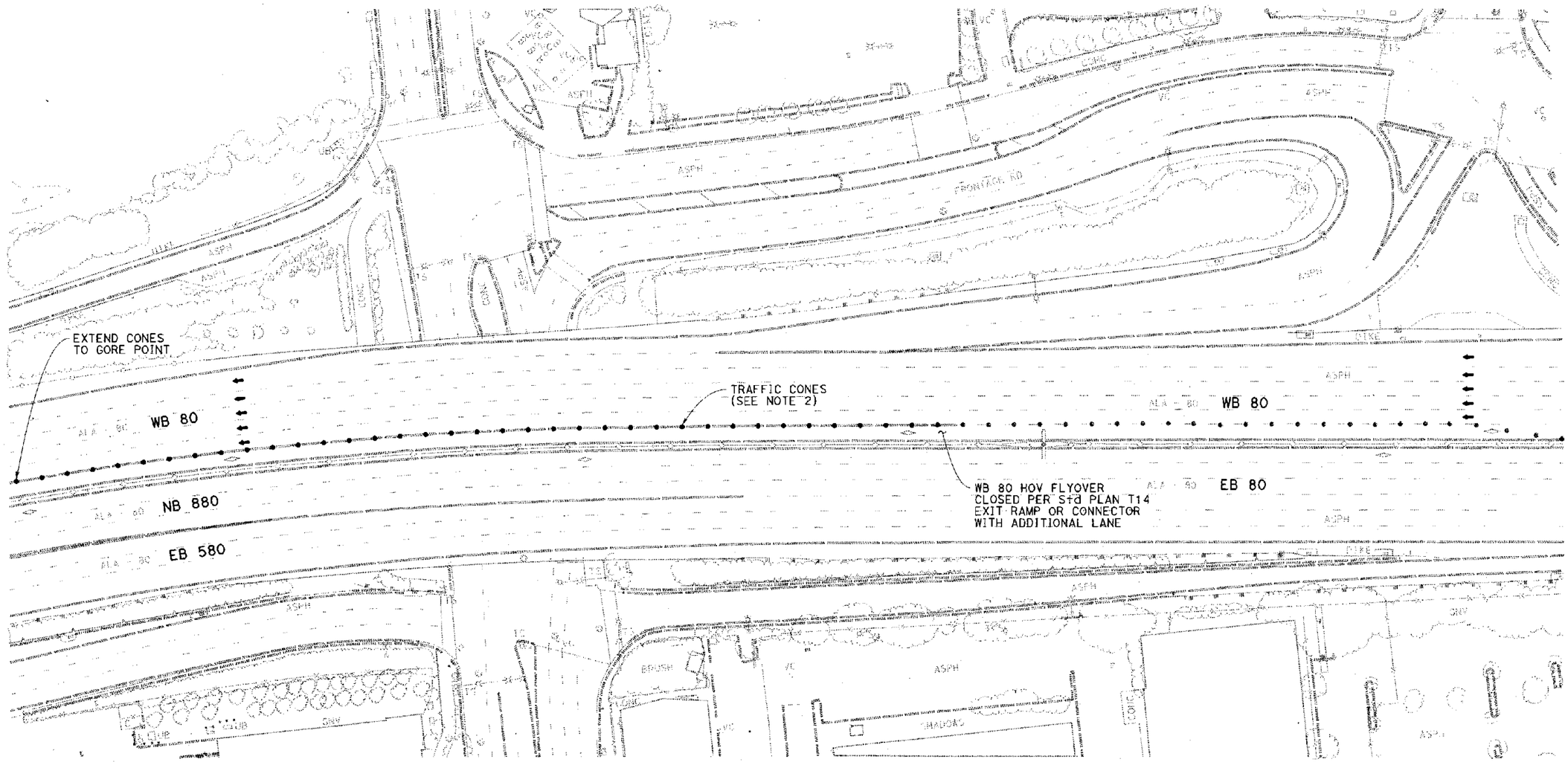

ALL DIMENSIONS ARE IN METERS UNLESS OTHERWISE SHOWN

TRAFFIC HANDLING PLAN
STAGE 2 - PHASE 1
(TEMPORARY WB ROUTE 80 CLOSURE)

SCALE 1:500

THIS PLAN ACCURATE FOR TRAFFIC HANDLING WORK ONLY.

FOR NOTES, ABBREVIATIONS &/OR LEGEND, SEE SHEET TH-8

TH-29

STATE OF CALIFORNIA - DEPARTMENT OF TRANSPORTATION
Caltrans
TOLL BRIDGE

PROJECT ENGINEER J.E. GUTIERREZ

CALCULATED/DESIGNED BY
CHECKED BY

DATE REVISED BY
DATE REVISED

LAST REVISION 07-31-08
DATE PLOTTED => 31-JUL-2008
TIME PLOTTED => 15:28

RELATIVE BORDER SCALE IS IN MILLIMETERS 0 20 40 60 80

USERNAME => s126849
DGN FILE => 40120lmd029.cce

CU 04251

EA 0120L1

MARK	DATE	DESCRIPTIONS	REV	CK	CCO No.
1	7/29/08	CHANGED QUANTITIES	RR	RP	47
2	7/29/08	ADDED QUANTITY			

REVISIONS

CONTRACT CHANGE ORDER NO. 47
SHEET 32 OF 33
10/30/08 04-012014

DIST	COUNTY	ROUTE	KILOMETER POST TOTAL PROJECT	SHEET NO	TOTAL SHEETS
04	Ala	80	1.6/2.7	82R1	643

Rodrigo Puente 8-29-06
REGISTERED CIVIL ENGINEER

1-29-07
PLANS APPROVAL DATE

REGISTERED PROFESSIONAL ENGINEER R. Puente No. 58612 Exp. 12-31-08 CIVIL STATE OF CALIFORNIA

The State of California or its officers or agents shall not be responsible for the accuracy or completeness of electronic copies of this plan sheet.

To get to the Caltrans web site, go to: http://www.dot.ca.gov

Rodrigo Puente 7-29-08
REGISTERED CIVIL ENGINEER

REGISTERED PROFESSIONAL ENGINEER R. Puente No. 58612 Exp. 12-31-08 CIVIL STATE OF CALIFORNIA

TEMPORARY PAVEMENT DELINEATION QUANTITIES

Station Limits or Location	Detail No. or Pavement Marking	Temporary Traffic Stripe (Paint) (2-Coat) 100 mm	Temporary Traffic Stripe (Paint) (2-Coat) 100 mm (Broken 5.18 m - 2.14 m)	Temporary Pavement Marker Retro-Reflective Type G
		White		
		m		EA
W 87+80 to 95+00	27B	724		
W 87+80 to 95+00	9		1448	100
W 87+80 to 91+31	9		708	50
W 93+79 to 95+00	9		122	10
Subtotal		724	2278	160
Total		3002		160

1

TEMPORARY METAL BEAM GUARD RAILING

Location	Quantity m
Rt W 88+80 to Lt W 93+70	491
Total	491

CHANNELIZER (SURFACE MOUNTED)

Location	Quantity EA
Rt W 88+04 to 88+80	6
Lt W 93+94 to 94+49	8
Total	14

TEMPORARY ALTERNATIVE FLARED TERMINAL SYSTEM

Location	Quantity EA
Lt W 93+70	1
Total	1

TEMPORARY END ANCHOR ASSEMBLY (TYPE SFT)

Location	Quantity EA
Rt W 88+80	1
Total	1

GUARD RAILING DELINEATOR

Location	Type F EA
Rt W 88+80 to Lt W 93+70	130
Total	130

OBJECT MARKER

Location	Type L-1 EA
Lt W 93+83	1
Total	1

2

TRAFFIC HANDLING QUANTITIES

THQ-1

STATE OF CALIFORNIA - DEPARTMENT OF TRANSPORTATION
Caltrans
TOLL BRIDGE

PROJECT ENGINEER J. E. GUTIERREZ

CALCULATED/DESIGNED BY | CHECKED BY | DATE | REVISED BY | DATE REVISED

LAST REVISION 07-31-08 DATE PLOTTED => 31-JUL-2008 TIME PLOTTED => 06:58

FOR REDUCED PLANS ORIGINAL SCALE IS IN MILLIMETERS 0 20 40 60 80

USERNAME => s126849
DGN FILE => 40120imf001.cco

CU 04251 EA 0120L1

DIST	COUNTY	ROUTE	KILOMETER POST TOTAL PROJECT	SHEET NO	TOTAL SHEETS
04	Ala	80	1.6/2.7	90R1	643

REGISTERED CIVIL ENGINEER 8-29-06

1-29-07
PLANS APPROVAL DATE

REGISTERED PROFESSIONAL ENGINEER A.G. Ureta No. 67663 Exp. 6-30-07 CIVIL STATE OF CALIFORNIA

The State of California or its officers or agents shall not be responsible for the accuracy or completeness of electronic copies of this plan sheet.

To get to the Caltrans web site, go to: http://www.dot.ca.gov

Caltrans Metric

REGISTERED CIVIL ENGINEER 7-29-08

REGISTERED PROFESSIONAL ENGINEER Anna G. Ureta No. 67663 Exp. 6-30-09 CIVIL STATE OF CALIFORNIA

PAVEMENT DELINEATION QUANTITIES

Station Limits or Location	Detail No. or Pavement Marking	Thermoplastic Traffic Stripe: 100 mm Yellow	Thermoplastic Traffic Stripe: 100 mm White	Thermoplastic Traffic Stripe: 100 mm White (Broken 5.18-2.14)	Thermoplastic Traffic Stripe: 100 mm White (Broken 10.98-3.66)	Pavement Marker: Non-Reflective Type A	Pavement Marker: Retro-Reflective Type C	Pavement Marker: Retro-Reflective Type D	Pavement Marker: Retro-Reflective Type G	Pavement Marker: Retro-Reflective Type H	Paint Pavement Marking: White	Paint Pavement Marking: Blue	Delineator (Class 1) Type F	Qwick Kurb Channelizer System	Parking Bumper (Precast Concrete)
		m				EA					m^2		EA	m	EA
W 87+80 to 95+00	27B		723												
W 87+80 to 94+37	9			1320					92						
W 87+80 to 91+31	9			708					50						
W 91+87 to 92+90	9			104					8						
W 92+45 to 93+96	9			151					11						
W 93+91 to 95+00	9			110					9						
W 88+04 to 89+80													23		
W 93+75 to 94+41													9		
W 89+80 to 93+70														372.50	
EBDTR 86+20 to 88+00	13M				720	192			52						
EBDTR 86+20 to 90+05	27B		386												
EBDTR 91+30 to 92+60													13		
EBDTR 92+10 to 94+09	13					270			70						
EBDTR 92+10 to 94+09	27B		197												
MRDTR 10+00 to 19+22	21	1844													
MRDTR 10+00 to 19+22	27B		1844												
Mole Substation Parking Lot	Symbols and Words										1.03	1.32			
Mole Substation Parking Lot	100 mm White		35												
Mole Substation Parking Lot															2
Subtotal		1844	3185	2393	720	462			292		1.03	1.32	45	372.50	2
Total		5029		2393	720	462			292		2.35		45	372.50	2

REMOVE TRAFFIC STRIPE AND PAVEMENT MARKER

Location	Detail No.	Remove Pavement Markers	Remove Thermoplastic Traffic Stripe	Remove Painted Traffic Stripe
		EA	m	
Rt W 87+80 to Lt W 95+00	27B		724	
Rt W 87+80 to Lt W 94+37	9	100	424	
Rt W 87+80 to 91+31	9	50	208	
Rt W 91+87 to 92+61	9	6	22	
Rt W 92+45 to Lt W 95+00	9	18	75	
Lt W 93+91 to 95+00	9	9	32	
Rt W 87+80 to Lt W 95+00	T27B			724
Rt W 87+80 to Lt W 94+37	T9	100		424
Rt W 87+80 to 91+31	T9	50		208
Lt W 93+79 to 95+00	T9	10		36
Lt EBDTR 86+20 to 88+00	13M	244	205	
Lt EBDTR 86+20 to 90+05	27B		386	
Lt EBDTR 88+72 to 90+05	13	46		
Lt EBDTR 92+10 to 94+09	13	340		
Lt EBDTR 92+10 to 93+60	27B		147	
Subtotal		973	2223	1392
Total		973	2223	1392

1

MARK	DATE	DESCRIPTIONS	REV	CK	CCO No.
1	7/29/08	CHANGED QUANTITIES	RR	AU	47
		REVISIONS			

CONTRACT CHANGE ORDER NO. 47
SHEET 33 OF 33
10/30/08 04-0120L4

PAVEMENT DELINEATION QUANTITIES

PDQ-1

STATE OF CALIFORNIA - DEPARTMENT OF TRANSPORTATION
Caltrans
TOLL BRIDGE

PROJECT ENGINEER J. E. GUTIERREZ

CALCULATED/DESIGNED BY | CHECKED BY | DATE | REVISED BY | DATE REVISED

LAST REVISION 07-31-08 | DATE PLOTTED => 31-JUL-2008 | TIME PLOTTED => 09:04

FOR REDUCED PLANS ORIGINAL SCALE IS IN MILLIMETERS 0 20 40 60 80

USERNAME => s126849
DGN FILE => 401201nc001.cco

CU 04251 | EA 0120L1

STATE OF CALIFORNIA - DEPARTMENT OF TRANSPORTATION

CONTRACT CHANGE ORDER MEMORANDUM

TO: AMER BATA / BEN GHAFGHAZI	FILE: **E.A.** 04 - 0120L4
FROM: BEN GHAFGHAZI	**CO-RTE-PM** ALA-80-1.6/2.7
	FED. NO. NO FED AID
CCO#: **47** SUPPLEMENT#: **0** Category Code: **CKPL**	CONTINGENCY BALANCE (incl. this change) **$13,684,997.20**
COST: **$21,095.00** INCREASE ☑ DECREASE ☐	HEADQUARTERS APPROVAL REQUIRED? ☐ YES ☑ NO
SUPPLEMENTAL FUNDS PROVIDED: **$0.00**	IS THIS REQUEST IN ACCORDANCE WITH ENVIRONMENTAL DOCUMENTS? ☑ YES ☐ NO
CCO DESCRIPTION: Striping Changes	**PROJECT DESCRIPTION:** Construct bridge, roadway, building and electrical system.

Original Contract Time:	Time Adj. This Change:	Previously Approved CCO Time Adjustments:	Percentage Time Adjusted: (including this change)	Total # of Unreconciled Deferred Time CCO(s): (including this change)
810 Day(s)	**0** Day(s)	**0** Day(s)	**0** %	**3**

THIS CHANGE ORDER PROVIDES FOR:

Revising temporary westbound striping, adding Object Marker (Type L-1) at beginning of temporary MBGR, and providing traffic control for striping per revised Traffic Handling Plans. All work is shown on sheets 3 of 33 through 33 of 33 of this CCO.

This change has been requested by Project Development. This change is necessary to provide diagonal striping and Type L-1 marker on the westbound shoulder to emphasize that the shoulder is closed to traffic and to enhance safety. Traffic handling plans have been revised because standard lane closure plans do not apply to the existing lane configuration. The closure is required west of the SFOBB Toll Plaza. This location drops from 22 lanes down to 5. Proper closure tapers cannot be provided in this condition. In order to safely provide lane closures for the striping new traffic handling plans were developed. The new plans address issues of providing safe merging distances and proper closure tapers.

This work will be done by increasing the appropriate contract item at contract item prices for $945.00, agreed unit price for the Object Marker (Type L-1) for $150.00, and extra work at force account for traffic control and placing diagonal striping for $20,000.00. Total of this CCO is $21,095.00, which can be financed from the contingency fund.

This change has been discussed and concurred with Jaime Gutierrez of Project Development and Rod Oto of Traffic Safety. Maintenance concurrence is not necessary because this work is temporary.

No adjustment of the contract time is warranted, as this change does not affect the controlling operation.

CONCURRED BY:		
Construction Engineer:	Ben Ghafghazi	Date 11/6/07
Bridge Engineer:		Date
Project Engineer:	Jaime Gutierrez	Date 8/25/08
Project Manager:		Date
FHWA Rep.:		Date
Environmental:		Date
Other (specify):	Rod Oto, Traffic Safety	Date 8/25/08
Other (specify):		Date
District Prior Approval By:		Date
HQ (Issue Approve) By:		Date
Resident Engineer's Signature:		Date 11/6/07

ESTIMATE OF COST

	THIS REQUEST	TOTAL TO DATE
ITEMS	$945.00	$945.00
FORCE ACCOUNT	$20,000.00	$20,000.00
AGREED PRICE	$150.00	$150.00
ADJUSTMENT	$0.00	$0.00
TOTAL	$21,095.00	$21,095.00

FEDERAL PARTICIPATION

☐ PARTICIPATING ☐ PARTICIPATING IN PART ☑ NONE
☐ NON-PARTICIPATING (MAINTENANCE) ☐ NON-PARTICIPATING

FEDERAL SEGREGATION (if more than one Funding Source or P.I.P. type)
☐ CCO FUNDED PER CONTRACT ☐ CCO FUNDED AS FOLLOWS

FEDERAL FUNDING SOURCE	PERCENT

ADA Notice: For individuals with sensory disabilities, this document is available in alternate formats. For information call: (916) 654-6410 or TDD (916) 654-3880 or write Records and Forms Management, 1120 N Street, MS-89, Sacramento, CA 95814.

STATE OF CALIFORNIA - DEPARTMENT OF TRANSPORTATION

CONTRACT CHANGE ORDER

Change Requested by: Engineer

CCO 48	Suppl. No. 0	Contract No. 04 - 0120L4	Road ALA-80-1.6/2.7	FED. AID LOC.: NO FED AID

To: **M C M CONSTRUCTION INC**

You are directed to make the following changes from the plans and specifications or do the following described work not included in the plans and specifications for this contract. ***NOTE: This change order is not effective until approved by the Engineer.***

Description of work to be done, estimate of quantities and prices to be paid. (Segregate between additional work at contract price, agreed price and force account.) Unless otherwise stated, rates for rental of equipment cover only such time as equipment is actually used and no allowance will be made for idle time. This last percentage shown is the net accumulated increase or decrease from the original quantity in the Engineer's Estimate.

Modify Section 86-2.09B, "Installation" of the Standard Specifications to allow the use of mechanical equipment to pull conductors into conduit during cable installation in lieu of hand pulling.

Adjustment of Compensation at Lump Sum:

Motor-pulling of 15kV, 600V, and 50 pair TOS/communication cables in lieu of hand-pulling shall be performed in accordance with the revised second paragraph of Section 86-2.09B, "Installation," of the Standard Specifications as follows:

"The Contractor shall hand-pull or motor-pull the conductors. Prior to installation of motor-pulled conductors, the Contractor shall test the conductors in accordance with Section 10-3.10, "Conductors, Cable, and Wiring," of the Special Provisions. The Contractor shall submit the manufacturer's recommended procedures for pulling the conductors to the Engineer for review and approval at least 20 days prior to installing the conductors. Mechanical aids may be used to assist the conductor installation. A tension measuring device or breakaway swivel shall be placed between the end of the conductor grip and pull rope to ensure that the tension does not exceed 100 percent of recommended tension. The conductor shall have a ball bearing swivel to prevent the conductors from twisting during installation."

For this work, the contractor will be paid the sum of $55,715.57. This sum constitutes full compensation, including markups, for this change.

Adjustment of Compensation at Agreed Lump Sum $55,715.57

Estimated Cost: Increase ☑ **Decrease** ☐ **$55,715.57**

By reason of this order the time of completion will be adjusted as follows: 0 days

Submitted by		
Signature	Resident Engineer BEN GHAFGHAZI	Date 9/11/08
Approval Recommended by		
Signature	Construction Manager Amer Bata	Date 9/11/08
Engineer Approval by		
Signature	Construction Manager Amer Bata	Date 9/24/08

We the undersigned contractor, have given careful consideration to the change proposed and agree, if this proposal is approved, that we will provide all equipment, furnish the materials, except as may otherwise be noted above, and perform all services necessary for the work above specified, and will accept as full payment therefor the prices shown above.

NOTE: If you, the contractor, do not sign acceptance of this order, your attention is directed to the requirements of the specifications as to proceeding with the ordered work and filing a written protest within the time therein specified.

Contractor Acceptance by		
Signature	(Print name and title) EDMUNDO A. PUCHI, TREASURER	Date 9/16/08

STATE OF CALIFORNIA - DEPARTMENT OF TRANSPORTATION

CONTRACT CHANGE ORDER MEMORANDUM

DATE: 5/1/2008 Page 1 of 1

TO: AMER BATA / BEN GHAFGHAZI	FILE: E.A. 04 - 0120L4
FROM: BEN GHAFGHAZI	CO-RTE-PM ALA-80-1.6/2.7
	FED. NO. NO FED AID
CCO#: 48 SUPPLEMENT#: 0 Category Code: CBSB	CONTINGENCY BALANCE (incl. this change) $13,514,014.20
COST: $55,715.57 INCREASE ☑ DECREASE ☐	HEADQUARTERS APPROVAL REQUIRED? ☑ YES ☐ NO
SUPPLEMENTAL FUNDS PROVIDED: $0.00	IS THIS REQUEST IN ACCORDANCE WITH ENVIRONMENTAL DOCUMENTS? ☑ YES ☐ NO
CCO DESCRIPTION: Allow Mechanical Pull of Conductors	**PROJECT DESCRIPTION:** Construct bridge, roadway, building and electrical system.

Original Contract Time:	Time Adj. This Change:	Previously Approved CCO Time Adjustments:	Percentage Time Adjusted: (including this change)	Total # of Unreconciled Deferred Time CCO(s): (including this change)
810 Day(s)	0 Day(s)	0 Day(s)	0 %	6

THIS CHANGE ORDER PROVIDES FOR:

Modifying Section 86-2.09B, "Installation" of the Standard Specifications to specify the use of mechanical equipment to pull conductors into conduit during cable installation in lieu of hand pulling.

This change is necessary due to the size and weight of the conductors specified. On this contract there are 15kV, 600V, and 50 pair TOS/communication cables to be installed. These are large cables that will be installed in long runs of conduit. Hand pulling of this cable is impractical. This CCO specifies mechanical pulling methods. The methods are to be approved by the Engineer. The approved methods shall be in accordance with manufacturer's recommendations and shall not exceed the manufacturer's specification for tension.

This work will be paid as an Adjustment of Compensation at Agreed Lump Sum of $55,715.57, which can be financed from the contingency fund. A detailed cost analysis is on file in the Resident Engineer's office..

This change has been discussed and concurred with Parviz Boozarpour of Electrical Design, Mike Forner, Principal Transportation Engineer, Jon Tapping, Headquarters Reviewer, and Ken Terpstra, Project Manager. Maintenance concurrence is not required since this change only addresses construction methods. An Issue and Approve was granted by Ken Darby of Headquarters Construction on September 11, 2008

No adjustment of the contract time is warranted, as this change does not affect the controlling operation.

CONCURRED BY:			
Construction Engineer:	Ben Ghafghazi	Date	9/11/08
Bridge Engineer:		Date	
Project Engineer:		Date	
Project Manager:	Ken Terprstra	Date	8/28/08
FHWA Rep.:		Date	
Environmental:		Date	
Other (specify):	Parviz Boozapour, Electrical Desig	Date	4/24/08
Other (specify):	Jon Tapping, Headquarters Review	Date	8/24/08
District Prior Approval By:	Mike Forner, Principal TE	Date	8/13/08
HQ (Issue Approve) By:	Ken Darby	Date	9/11/08
Resident Engineer's Signature:		Date	9/11/08

ESTIMATE OF COST

	THIS REQUEST	TOTAL TO DATE
ITEMS	$0.00	$0.00
FORCE ACCOUNT	$0.00	$0.00
AGREED PRICE	$0.00	$0.00
ADJUSTMENT	$55,715.57	$55,715.57
TOTAL	$55,715.57	$55,715.57

FEDERAL PARTICIPATION

☐ PARTICIPATING ☐ PARTICIPATING IN PART ☑ NONE
☐ NON-PARTICIPATING (MAINTENANCE) ☐ NON-PARTICIPATING

FEDERAL SEGREGATION (if more than one Funding Source or P.I.P. type)
☑ CCO FUNDED PER CONTRACT ☐ CCO FUNDED AS FOLLOWS

FEDERAL FUNDING SOURCE PERCENT

ADA Notice: For individuals with sensory disabilities, this document is available in alternate formats. For information call: (916) 654-6410 or TDD (916) 654-3880 or write Records and Forms Management, 1120 N Street, MS-89, Sacramento, CA 95814.

STATE OF CALIFORNIA - DEPARTMENT OF TRANSPORTATION

CONTRACT CHANGE ORDER MEMORANDUM

DATE: 4/7/2009

TO: AMER BATA / BEN GHAFGHAZI	FILE: **E.A.** 04 - 0120L4
FROM: BEN GHAFGHAZI	**CO-RTE-PM** ALA-80-1.6/2.7
	FED. NO. NO FED AID
CCO#: **48** SUPPLEMENT#: **1** Category Code: **CBSB**	CONTINGENCY BALANCE (incl. this change) **$6,381,942.20**
COST: **$100,214.38** INCREASE ☑ DECREASE ☐	HEADQUARTERS APPROVAL REQUIRED? ☑ YES ☐ NO
SUPPLEMENTAL FUNDS PROVIDED: **$0.00**	IS THIS REQUEST IN ACCORDANCE WITH ENVIRONMENTAL DOCUMENTS? ☑ YES ☐ NO
CCO DESCRIPTION: Allow Mechanical Pull of Conductors	**PROJECT DESCRIPTION:** Construct bridge, roadway, building and electrical system.

Original Contract Time:	Time Adj. This Change:	Previously Approved CCO Time Adjustments:	Percentage Time Adjusted: (including this change)	Total # of Unreconciled Deferred Time CCO(s): (including this change)
810 Day(s)	**DEF** Day(s)	**184** Day(s)	**23** %	**10**

THIS CHANGE ORDER PROVIDES FOR:

Modifying Section 86-2.09B, "Installation" of the Standard Specifications to specify the use of mechanical equipment to pull conductors into conduit in westbound Bridge No. 34-0006L during cable installation in lieu of hand pulling.

This change is necessary due to the size and weight of the conductors specified. On this contract there are 50 pair TOS/communication cables to be installed in the structure. These are large cables that will be installed in long runs of conduit. Hand pulling of this cable is impractical. This CCO specifies mechanical pulling methods. The methods are to be approved by the Engineer. The approved methods shall be in accordance with cable manufacturer's recommendations and shall not exceed the manufacturer's specification for tension. This work is a continuation of CCO No. 48 which allowed mechanical pulling for installing cable in the duct bank. At the time CCO No. 48 was written it was not anticipated that mechanical pulling would be performed for the structure and therefore was not included in the CCO.

This work will be paid as an Adjustment of Compensation at Agreed Lump Sum of $100,214.38, which can be financed from the contingency fund. This cost has been revised from $95,442.27, granted on Issue and Approve dated June 8, 2009, to include 5% prime contractor mark-up. A detailed cost analysis is on file in the Resident Engineer's office.

This change has been discussed and concurred with Parviz Boozarpour, Electrical Design; Patrick Treacy, HQ Coordinator; Mike Forner, SFOBB Construction Manager; and Ken Terpstra, Project Manager. Maintenance concurrence is not required since this change only addresses construction methods. An Issue and Approve was granted by Headquarters Construction on June 25, 2009.

Adjustment of contract time is deferred pending completion of the work specified in this change as it may affect the controlling operation. Determination of a commensurate time extension will be made in accordance with Section 10-1.14, "Progress Schedule (Critical Path Method)," of the Special Provisions and Section 8-1.07, "Liquidated Damages," of the Standard Specifications.

CONCURRED BY:

Construction Engineer:	Ben Ghafghazi	Date	6/25/09
Bridge Engineer:		Date	
Project Engineer:		Date	
Project Manager:	Ken Terprstra	Date	4/15/09
FHWA Rep.:		Date	
Environmental:		Date	
Other (specify):	Parviz Boozarpour, Elec. Design	Date	4/24/08
Other (specify):	Patrick Treacy, HQ Const. Coord.	Date	4/8/09
District Prior Approval By:	Mike Forner, Principal TE	Date	4/7/09
HQ (Issue Approve) By:	Bob Molera	Date	6/25/09
Resident Engineer's Signature:		Date	6/25/09

ESTIMATE OF COST

	THIS REQUEST	TOTAL TO DATE
ITEMS	$0.00	$0.00
FORCE ACCOUNT	$0.00	$0.00
AGREED PRICE	$0.00	$0.00
ADJUSTMENT	$100,214.38	$155,929.95
TOTAL	$100,214.38	$155,929.95

FEDERAL PARTICIPATION

☐ PARTICIPATING ☐ PARTICIPATING IN PART ☑ NONE
☐ NON-PARTICIPATING (MAINTENANCE) ☐ NON-PARTICIPATING

FEDERAL SEGREGATION (if more than one Funding Source or P.I.P. type)
☑ CCO FUNDED PER CONTRACT ☐ CCO FUNDED AS FOLLOWS

FEDERAL FUNDING SOURCE	PERCENT

ADA Notice: For individuals with sensory disabilities, this document is available in alternate formats. For information call: (916) 654-6410 or TDD (916) 654-3880 or write Records and Forms Management, 1120 N Street, MS-89, Sacramento, CA 95814.

STATE OF CALIFORNIA - DEPARTMENT OF TRANSPORTATION

CONTRACT CHANGE ORDER

Change Requested by: Engineer

CCO 48	Suppl. No. 1	Contract No. 04 - 0120L4	Road ALA-80-1.6/2.7	FED. AID LOC.: NO FED AID

To: **M C M CONSTRUCTION INC**

You are directed to make the following changes from the plans and specifications or do the following described work not included in the plans and specifications for this contract. ***NOTE: This change order is not effective until approved by the Engineer.***

Description of work to be done, estimate of quantities and prices to be paid. (Segregate between additional work at contract price, agreed price and force account.) Unless otherwise stated, rates for rental of equipment cover only such time as equipment is actually used and no allowance will be made for idle time. This last percentage shown is the net accumulated increase or decrease from the original quantity in the Engineer's Estimate.

Modify Section 86-2.09B, "Installation" of the Standard Specifications to allow the use of mechanical equipment to pull conductors into conduit in Bridge No. 34-0006L during cable installation in lieu of hand pulling. Pulling cables into Bridge No. 34-0006L was not included on CCO No. 48 Supplement 0.

Adjustment of Compensation at Lump Sum:

Motor-pulling of 50 pair TOS/communication cables to be installed in lieu of hand-pulling shall be performed in accordance with the revised second paragraph of Section 86-2.09B, "Installation," of the Standard Specifications as follows:

"The Contractor shall hand-pull or motor-pull the conductors. Prior to installation of motor-pulled conductors, the Contractor shall test the conductors in accordance with Section 10-3.10, "Conductors, Cable, and Wiring," of the Special Provisions. The Contractor shall submit the manufacturer's recommended procedures for pulling the conductors to the Engineer for review and approval at least 20 days prior to installing the conductors. Mechanical aids may be used to assist the conductor installation. A tension measuring device or breakaway swivel shall be placed between the end of the conductor grip and pull rope to ensure that the tension does not exceed 100 percent of recommended tension. The conductor shall have a ball bearing swivel to prevent the conductors from twisting during installation."

For this work, the contractor will be paid the sum of $100,214.38. This sum constitutes full compensation, including markups, for this change.

Adjustment of Compensation at Agreed Lump Sum $100,214.38

Consideration of a time adjustment will be deferred until completion of the work specified herein. Determination of a commensurate time extension will be made in accordance with Section 10-1.14, "Progress Schedule (Critical Path Method)," of the Special Provisions and Section 8-1.07, "Liquidated Damages," of the Standard Specifications.

Estimated Cost: Increase ☑ Decrease ☐ **$100,214.38**

By reason of this order the time of completion will be adjusted as follows: Deferred

Submitted by		
Signature	Resident Engineer BEN GHAFGHAZI	Date 6/18/09
Approval Recommended by		
Signature	Construction Manager Amer Bata	Date 6/19/09
Engineer Approval by		
Signature MCM 7-21-09	Construction Manager Amer Bata	Date 07/13/09

We the undersigned contractor, have given careful consideration to the change proposed and agree, if this proposal is approved, that we will provide all equipment, furnish the materials, except as may otherwise be noted above, and perform all services necessary for the work above specified, and will accept as full payment therefor the prices shown above.

NOTE: If you, the contractor, do not sign acceptance of this order, your attention is directed to the requirements of the specifications as to proceeding with the ordered work and filing a written protest within the time therein specified.

Contractor Acceptance by		
Signature	(Print name and title) EDMUNDO A. PUCHI, TREASURER	Date 6/30/09

CONTRACT CHANGE ORDER

Change Requested by: Engineer

CCO 48	Suppl. No. 1	Contract No. 04 - 0120L4	Road ALA-80-1.6/2.7	FED. AID LOC.: NO FED AID

To: **M C M CONSTRUCTION INC**

You are directed to make the following changes from the plans and specifications or do the following described work not included in the plans and specifications for this contract. ***NOTE: This change order is not effective until approved by the Engineer.***

Description of work to be done, estimate of quantities and prices to be paid. (Segregate between additional work at contract price, agreed price and force account.) Unless otherwise stated, rates for rental of equipment cover only such time as equipment is actually used and no allowance will be made for idle time. This last percentage shown is the net accumulated increase or decrease from the original quantity in the Engineer's Estimate.

Modify Section 86-2.09B, "Installation" of the Standard Specifications to allow the use of mechanical equipment to pull conductors into conduit in Bridge No. 34-0006L during cable installation in lieu of hand pulling. Pulling cables into Bridge No. 34-0006L was not included on CCO No. 48 Supplement 0.

Adjustment of Compensation at Lump Sum:

Motor-pulling of 50 pair TOS/communication cables to be installed in lieu of hand-pulling shall be performed in accordance with the revised second paragraph of Section 86-2.09B, "Installation," of the Standard Specifications as follows:

"The Contractor shall hand-pull or motor-pull the conductors. Prior to installation of motor-pulled conductors, the Contractor shall test the conductors in accordance with Section 10-3.10, "Conductors, Cable, and Wiring," of the Special Provisions. The Contractor shall submit the manufacturer's recommended procedures for pulling the conductors to the Engineer for review and approval at least 20 days prior to installing the conductors. Mechanical aids may be used to assist the conductor installation. A tension measuring device or breakaway swivel shall be placed between the end of the conductor grip and pull rope to ensure that the tension does not exceed 100 percent of recommended tension. The conductor shall have a ball bearing swivel to prevent the conductors from twisting during installation."

For this work, the contractor will be paid the sum of $100,214.38. This sum constitutes full compensation, including markups, for this change.

Adjustment of Compensation at Agreed Lump Sum $100,214.38

Consideration of a time adjustment will be deferred until completion of the work specified herein. Determination of a commensurate time extension will be made in accordance with Section 10-1.14, "Progress Schedule (Critical Path Method)," of the Special Provisions and Section 8-1.07, "Liquidated Damages," of the Standard Specifications.

Estimated Cost: Increase ☑ Decrease ☐ **$100,214.38**

By reason of this order the time of completion will be adjusted as follows: Deferred

Submitted by

Signature	Resident Engineer BEN GHAFGHAZI	Date 6/18/09

Approval Recommended by

Signature	Construction Manager Amer Bata	Date 6/19/09

Engineer Approval by

Signature	Construction Manager for Amer Bata	Date 07/13/09

We the undersigned contractor, have given careful consideration to the change proposed and agree, if this proposal is approved, that we will provide all equipment, furnish the materials, except as may otherwise be noted above, and perform all services necessary for the work above specified, and will accept as full payment therefor the prices shown above.

NOTE: If you, the contractor, do not sign acceptance of this order, your attention is directed to the requirements of the specifications as to proceeding with the ordered work and filing a written protest within the time therein specified.

Contractor Acceptance by

Signature	(Print name and title) EDMUNDO A. PUCHI, TREASURER	Date 6/30/09

STATE OF CALIFORNIA - DEPARTMENT OF TRANSPORTATION

CONTRACT CHANGE ORDER MEMORANDUM

DATE: 4/6/2010 Page 1 of 1

TO: AMER BATA / BEN GHAFGHAZI

FROM: BEN GHAFGHAZI

FILE: **E.A.** 04 - 0120L4
CO-RTE-PM ALA-80-1.6/2.7
FED. NO. NO FED AID

CCO#: **48** SUPPLEMENT#: **2** Category Code: **AFZZ**

CONTINGENCY BALANCE (incl. this change) **$2,146,116.40**

COST: **$0.00** INCREASE ☐ DECREASE ☐

HEADQUARTERS APPROVAL REQUIRED? ☑ YES ☐ NO

SUPPLEMENTAL FUNDS PROVIDED: **$0.00**

IS THIS REQUEST IN ACCORDANCE WITH ENVIRONMENTAL DOCUMENTS? ☑ YES ☐ NO

CCO DESCRIPTION:
Time Adjustment of 0 Days

PROJECT DESCRIPTION:
Construct bridge, roadway, building and electrical system.

Original Contract Time:	Time Adj. This Change:	Previously Approved CCO Time Adjustments:	Percentage Time Adjusted: (including this change)	Total # of Unreconciled Deferred Time CCO(s): (including this change)
810 Day(s)	0 Day(s)	184 Day(s)	23 %	15

THIS CHANGE ORDER PROVIDES FOR:
A time adjustment of 0 (zero) working days, in accordance with Section 8-1.07, "Liquidated Damages", of the Standard Specifications.

It has been determined that the work of Contract Change Order No. 48 Supplement #1 has had no impact on the contractor's controlling operation. Therefore, a time extension of 0 days is recommended.

Total Time Adjustment = 0 Days

CONCURRED BY:

Construction Engineer:	Ben Ghafghazi	Date 4/7/2010
Bridge Engineer:		Date
Project Engineer:		Date
Project Manager:		Date
FHWA Rep.:		Date
Environmental:		Date
Other (specify):		Date
Other (specify):		Date
District Prior Approval By:		Date
HQ (Issue Approve) By:		Date
Resident Engineer's Signature:		Date 4/7/2010

ESTIMATE OF COST

	THIS REQUEST	TOTAL TO DATE
ITEMS	$0.00	$0.00
FORCE ACCOUNT	$0.00	$0.00
AGREED PRICE	$0.00	$0.00
ADJUSTMENT	$0.00	$155,929.95
TOTAL	$0.00	$155,929.95

FEDERAL PARTICIPATION

☐ PARTICIPATING ☐ PARTICIPATING IN PART ☐ NONE
☐ NON-PARTICIPATING (MAINTENANCE) ☐ NON-PARTICIPATING

FEDERAL SEGREGATION (if more than one Funding Source or P.I.P. type)
☐ CCO FUNDED PER CONTRACT ☐ CCO FUNDED AS FOLLOWS

FEDERAL FUNDING SOURCE	PERCENT

ADA Notice: For individuals with sensory disabilities, this document is available in alternate formats. For information call: (916) 654-6410 or TDD (916) 654-3880 or write Records and Forms Management, 1120 N Street, MS-89, Sacramento, CA 95814.

STATE OF CALIFORNIA - DEPARTMENT OF TRANSPORTATION

CONTRACT CHANGE ORDER

Change Requested by: Engineer

CCO: 48	Suppl. No. 2	Contract No. 04 - 0120L4	Road ALA-80-1.6/2.7	FED. AID LOC.: NO FED AID

To: **M C M CONSTRUCTION INC**

You are directed to make the following changes from the plans and specifications or do the following described work not included in the plans and specifications for this contract. ***NOTE: This change order is not effective until approved by the Engineer.***

Description of work to be done, estimate of quantities and prices to be paid. (Segregate between additional work at contract price, agreed price and force account.) Unless otherwise stated, rates for rental of equipment cover only such time as equipment is actually used and no allowance will be made for idle time. This last percentage shown is the net accumulated increase or decrease from the original quantity in the Engineer's Estimate.

TIME ADJUSTMENT:

A determination of the delay in completion of the contract due to the work specified by Contract Change Order No. 48 Supplement #1 has been made in accordance with the provisions of Section 8-1.07 of the Standard Specifications.

Time Adjustment = 0 Days

Acceptance of this change order constitutes an agreement of full resolution of all time impact costs resulting from Change Order No. 48 Supplement #1.

This change order acts to resolve the deferred time issued on Change Order No. 48 Supplement #1, and no additional time shall be granted.

Estimated Cost: **Increase** ☐ **Decrease** ☐ **$0.00**

By reason of this order the time of completion will be adjusted as follows: 0 days

Signature	**Resident Engineer** Ben Ghafghazi	**Date** 4/7/2010
Signature	**Construction Manager** Amer Bata	**Date** 4/8/2010
Signature	**Construction Manager** Amer Bata	**Date** 7/14/10

We the undersigned contractor, have given careful consideration to the change proposed and agree, if this proposal is approved, that we will provide all equipment, furnish the materials, except as may otherwise be noted above, and perform all services necessary for the work above specified, and will accept as full payment therefor the prices shown above.

NOTE: If you, the contractor, do not sign acceptance of this order, your attention is directed to the requirements of the specifications as to proceeding with the ordered work and filing a written protest within the time therein specified.

Signature	**(Print name and title)** JAMES A. CARTER, PRESIDENT	**Date** 7/14/10

STATE OF CALIFORNIA - DEPARTMENT OF TRANSPORTATION

CONTRACT CHANGE ORDER

Change Requested by: Engineer

CCO 49	Suppl. No. 0	Contract No. 04 - 0120L4	Road ALA-80-1.6/2.7	FED. AID LOC.: NO FED AID

M C M CONSTRUCTION INC

You are directed to make the following changes from the plans and specifications or do the following described work not included in the plans and specifications for this contract. ***NOTE: This change order is not effective until approved by the Engineer.***

Description of work to be done, estimate of quantities and prices to be paid. (Segregate between additional work at contract price, agreed price and force account.) Unless otherwise stated, rates for rental of equipment cover only such time as equipment is actually used and no allowance will be made for idle time. This last percentage shown is the net accumulated increase or decrease from the original quantity in the Engineer's Estimate.

Extra Work at Force Account:

Maintain and repair the existing temporary access facilities identified in Section 10-~~3.55~~ 1.355, "Temporary Access Facilities," of the Special Provisions. Maintenance and repair work will be directed by the Engineer.

Estimated cost of Extra Work at Force Account $50,000.00

Estimated Cost: Increase ☑ Decrease ☐ **$50,000.00**

By reason of this order the time of completion will be adjusted as follows: 0 days

Submitted by		
Signature	Resident Engineer BEN GHAFGHAZI	Date 5/2/08
Approval Recommended by		
Signature	Construction Engineer Ben Ghafghazi	Date 5/2/08
Engineer Approval by		
Signature	Construction Engineer Ben Ghafghazi	Date 5/23/08

We the undersigned contractor, have given careful consideration to the change proposed and agree, if this proposal is approved, that we will provide all equipment, furnish the materials, except as may otherwise be noted above, and perform all services necessary for the work above specified, and will accept as full payment therefor the prices shown above.

NOTE: If you, the contractor, do not sign acceptance of this order, your attention is directed to the requirements of the specifications as to proceeding with the ordered work and filing a written protest within the time therein specified.

Contractor Acceptance by		
Signature	(Print name and title) HARRY McGOVERN, GENERAL MGR.	Date 5/19/08

STATE OF CALIFORNIA - DEPARTMENT OF TRANSPORTATION

CONTRACT CHANGE ORDER MEMORANDUM

DATE: 5/2/2008 Page 1 of 1

TO: AMER BATA / BEN GHAFGHAZI	FILE: E.A. 04 - 0120L4
FROM: BEN GHAFGHAZI	CO-RTE-PM ALA-80-1.6/2.7
	FED. NO. NO FED AID
CCO#: 49 SUPPLEMENT#: 0 Category Code: AWZZ	CONTINGENCY BALANCE (incl. this change) $15,023,026.70
COST: $50,000.00 INCREASE ☑ DECREASE ☐	HEADQUARTERS APPROVAL REQUIRED? ☐ YES ☑ NO
SUPPLEMENTAL FUNDS PROVIDED: $50,000.00	IS THIS REQUEST IN ACCORDANCE WITH ENVIRONMENTAL DOCUMENTS? ☑ YES ☐ NO
CCO DESCRIPTION: Maintain Existing Trestle	**PROJECT DESCRIPTION:** Construct bridge, roadway, building and electrical system.

Original Contract Time:	Time Adj. This Change:	Previously Approved CCO Time Adjustments:	Percentage Time Adjusted: (including this change)	Total # of Unreconciled Deferred Time CCO(s): (including this change)
810 Day(s)	0 Day(s)	0 Day(s)	0 %	2

THIS CHANGE ORDER PROVIDES FOR:

Maintaining and repairing existing temporary access facilities identified in Section ~~10-3.55~~ 10-1.355, "Temporary Access Facilities," of the Special Provisions. Maintenance and repair work will be directed by the Engineer.

Section 10-1.355 "Temporary Access Facilities," of the Special Provisions states that the Department is responsible for directing all maintenance and repair work on the temporary access facilities and payment for this work will be extra work as provided in Section 4-1.03D, "Extra Work," of the Standard Specifications.

This work will be paid as extra work at force account for an estimated cost of $50,000. Supplemental funds in the amount of $100,000 have been provided for this work .

Design and Maintenance concurrence is not required as this work is anticipated by the contract documents.

No adjustment of the contract time is warranted, as this change does not affect the controlling operation.

CONCURRED BY:

Construction Engineer:	Ben Ghafghazi	Date 5/2/08
Bridge Engineer:		Date
Project Engineer:		Date
Project Manager:		Date
FHWA Rep.:		Date
Environmental:		Date
Other (specify):		Date
Other (specify):		Date
District Prior Approval By:		Date
HQ (Issue Approve) By:		Date
Resident Engineer's Signature:		Date 5/2/08

ESTIMATE OF COST

	THIS REQUEST	TOTAL TO DATE
ITEMS	$0.00	$0.00
FORCE ACCOUNT	$50,000.00	$50,000.00
AGREED PRICE	$0.00	$0.00
ADJUSTMENT	$0.00	$0.00
TOTAL	$50,000.00	$50,000.00

FEDERAL PARTICIPATION

☐ PARTICIPATING ☐ PARTICIPATING IN PART ☑ NONE
☐ NON-PARTICIPATING (MAINTENANCE) ☐ NON-PARTICIPATING

FEDERAL SEGREGATION (if more than one Funding Source or P.I.P. type)
☑ CCO FUNDED PER CONTRACT ☐ CCO FUNDED AS FOLLOWS

FEDERAL FUNDING SOURCE	PERCENT

ADA Notice: For individuals with sensory disabilities, this document is available in alternate formats. For information call: (916) 654-6410 or TDD (916) 654-3880 or write Records and Forms Management, 1120 N Street, MS-89, Sacramento, CA 95814.

CONTRACT CHANGE ORDER

Change Requested by: Engineer

CCO 50	Suppl. No. 0	Contract No. 04 - 0120L4	Road ALA-80-1.6/2.7	FED. AID LOC.: NO FED AID

M C M CONSTRUCTION INC

You are directed to make the following changes from the plans and specifications or do the following described work not included in the plans and specifications for this contract. ***NOTE: This change order is not effective until approved by the Engineer.***

Description of work to be done, estimate of quantities and prices to be paid. (Segregate between additional work at contract price, agreed price and force account.) Unless otherwise stated, rates for rental of equipment cover only such time as equipment is actually used and no allowance will be made for idle time. This last percentage shown is the net accumulated increase or decrease from the original quantity in the Engineer's Estimate.

Extra Work at Lump Sum:

Provide labor, equipment, and materials to revise grounding details per sheets 2 of 7 through 7 of 7 of this CCO. For this work the contractor will be paid the sum of $81,761.58. This sum constitutes full compensation, including markups, for this change.

~~Estimated~~ Total cost of Extra Work at Lump Sum $81,761.58

Estimated Cost: Increase ☑ **Decrease** ☐ **$81,761.58**

By reason of this order the time of completion will be adjusted as follows: 0 days

Submitted by		
Signature	Resident Engineer BEN GHAFGHAZI	Date 8/6/08
Approval Recommended by		
Signature	Construction Engineer Ben Ghafghazi	Date 8/6/08
Engineer Approval by		
Signature	Construction Manager Amer Bata	Date 8/20/08

We the undersigned contractor, have given careful consideration to the change proposed and agree, if this proposal is approved, that we will provide all equipment, furnish the materials, except as may otherwise be noted above, and perform all services necessary for the work above specified, and will accept as full payment therefor the prices shown above.

NOTE: If you, the contractor, do not sign acceptance of this order, your attention is directed to the requirements of the specifications as to proceeding with the ordered work and filing a written protest within the time therein specified.

Contractor Acceptance by		
Signature	(Print name and title) EDMUNDO A. PUCHI, TREASURER	Date 8/18/08

DIST	COUNTY	ROUTE	KILOMETER POST TOTAL PROJECT	SHEET No	TOTAL SHEETS
04	Ala	80	1.6/2.7	413	643

REGISTERED ELECTRICAL ENGINEER 05/15/06 DATE

1-29-07
PLANS APPROVAL DATE

REGISTERED PROFESSIONAL ENGINEER JENS ERLINGSSON No. 8249 Exp. 9/30/08 ELECTRICAL STATE OF CALIFORNIA

PB POWER, Inc.
A Parsons Brinckerhoff Company
303 Second St., Suite 700N
San Francisco, CA 94107-317

The State of California or its officers or agents shall not be responsible for the accuracy or completeness of electronic copies of this plan sheet.

To get to the Caltrans web site, go to: http://www.dot.ca.gov

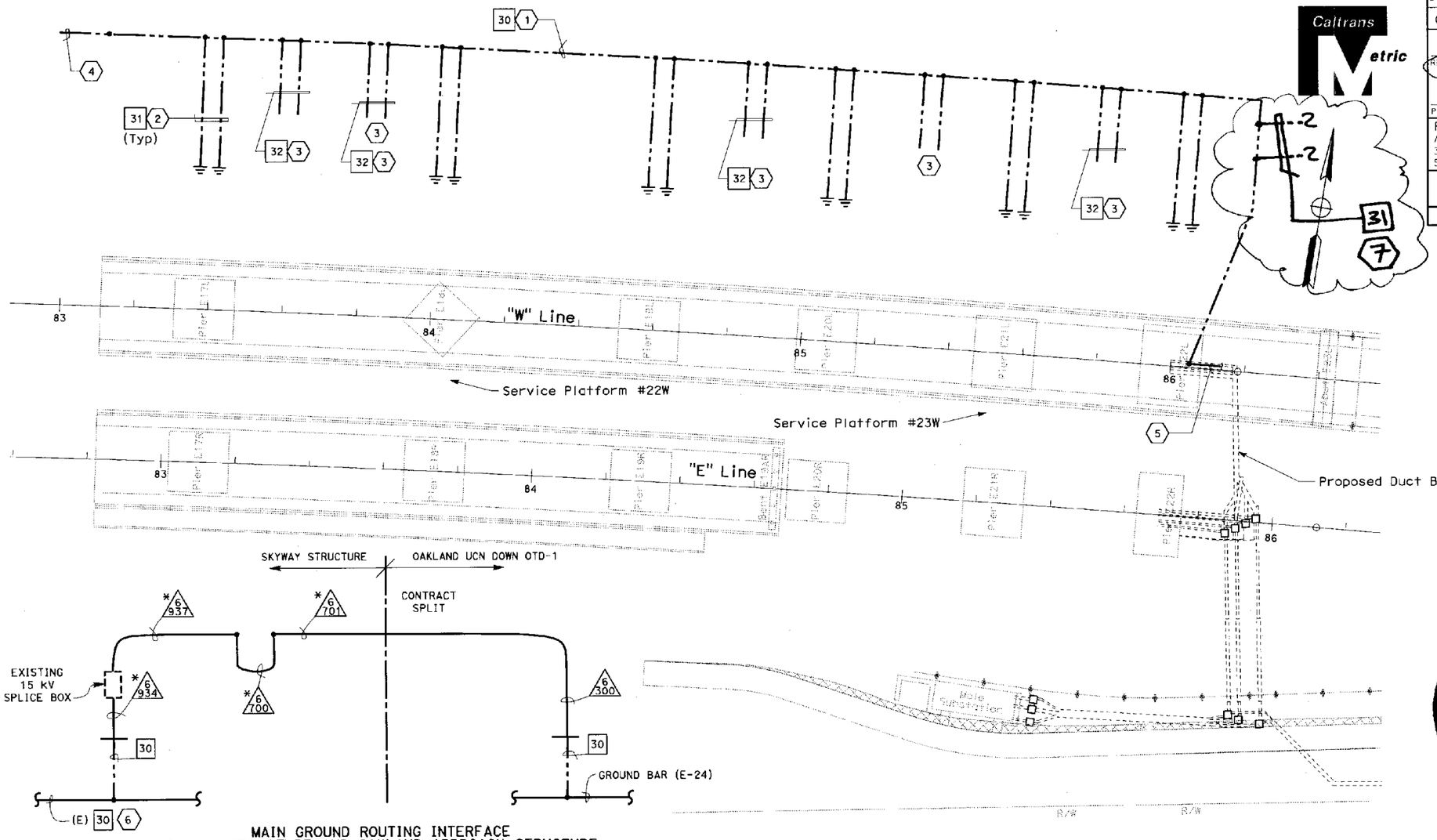

MAIN GROUND ROUTING INTERFACE
SKYWAY STRUCTURE AND OAKLAND APPROACH STRUCTURE

REGISTERED PROFESSIONAL ENGINEER PARVIZ BOOZARPOUR No. 12735 Exp. 9/30/08 ELECTRICAL STATE OF CALIFORNIA

SHEET NOTES:

1. Install one separate 500 kcmil bare copper system grounding conductor in westbound girder, spanning the entire Oakland Structure. The system-grounding conductor shall be physically attached to the 15 kV raceway system.
2. At each pier, two 250 kcmil bare copper ground conductors shall be exothermically welded to the 500 kcmil system grounding conductor, run embedded down the pier column, and shall be exothermically welded to the pier footing collar or to ground rods.
3. Each Vault and Service platform shall be grounded with a #4/0 bare copper conductor. See sheets E-24 thru E-28 and E-21 respectively for details.
4. Exothermically weld the 500 kcmil system grounding conductor, at each contract split point, to the adjoining 500 kcmil system grounding conductor, to be installed under a different contract.
5. Continued on sheet E-120.
6. Mount 500 kcmil bare copper wire to existing 500 kcmil bare wire copper wire at 15 kV cable tray on Skyway structure.

NOTES:

1. References:
   - For other grounding connections in Mole substation, see sheet AE-4.
2. (x) Existing conduits add 500 kcmil bare copper wire with pull rope.

7 COIL 2 METERS TOWARDS ABUTMENT E23L FOR CONNECTION BY OTHERS.

Contract No. 04-0120L4
Page 2 of 7
CCO No. 50 Suppl. No. 0
Contractor MCM
Res. Engr. B. Ghafghazi
04-0120L4 8/6/08

DETAILS
ROADWAY AND GIRDER LEVEL WESTBOUND GIRDER GROUNDING SYSTEM
NO SCALE

THIS PLAN ACCURATE FOR ELECTRICAL WORK ONLY.

E-42

STATE OF CALIFORNIA - DEPARTMENT OF TRANSPORTATION
Caltrans

DESIGN OVERSIGHT: BEHZAD GOLEMOHAMMADI

CALCULATED/DESIGNED BY	CHECKED BY	DATE 2/06	REVISED BY	DATE REVISED
FK	AB	2/06		

ASF REVISION 00-00-00
DATE PLOTTED => 06-FEB-2007
TIME PLOTTED => 12:36

FOR REDUCED PLANS ORIGINAL SCALE IS IN MILLIMETERS 0 20 40 60 80
DGN FILE =>401201ua042.dgn
USERNAME =>trstrk
CU 04251
EA 0120L1

DIST	COUNTY	ROUTE	KILOMETER POST TOTAL PROJECT	SHEET No	TOTAL SHEETS
04	Ala	80	1.6/2.7	477	643

REGISTERED ELECTRICAL ENGINEER 05/15/06 DATE

1-29-07
PLANS APPROVAL DATE

REGISTERED PROFESSIONAL ENGINEER JENS ERLINGSSON No. 8249 Exp. 9/30/08 ELECTRICAL STATE OF CALIFORNIA

PB POWER, Inc.
A Parsons Brinckerhoff Company
303 Second St., Suite 700N
San Francisco, CA 94107-1317

The State of California or its officers or agents shall not be responsible for the accuracy or completeness of electronic copies of this plan sheet.

To get to the caltrans web site, go to http://www.dot.ca.gov

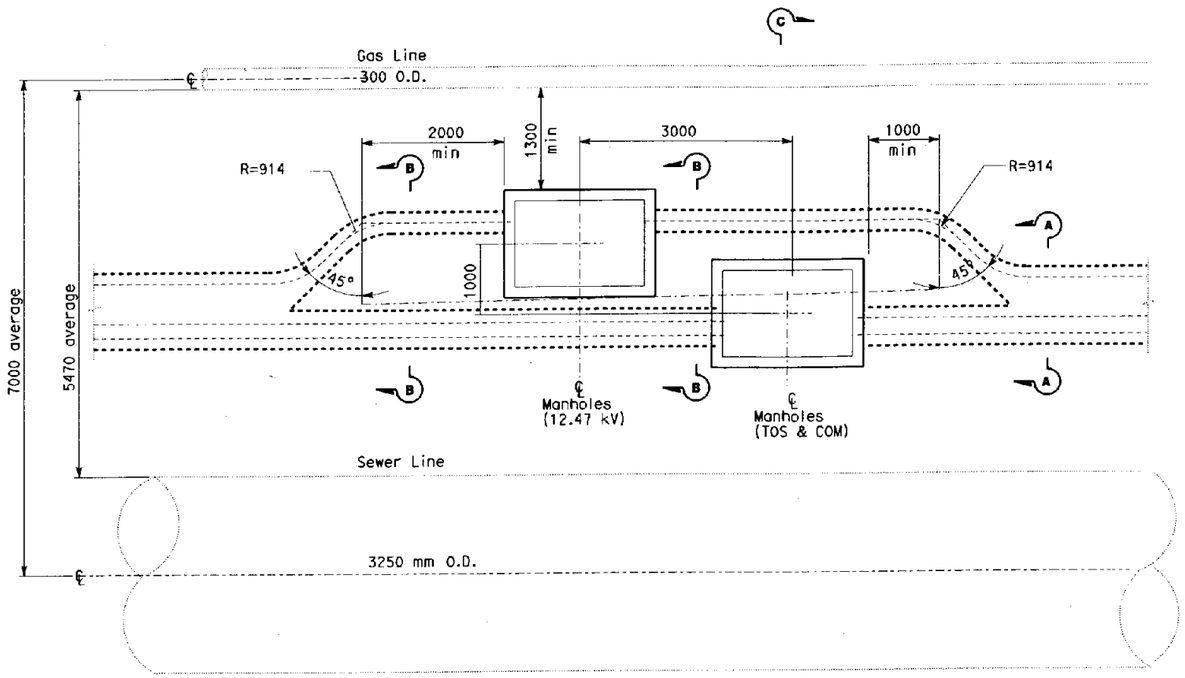

PLAN
(TYPICAL MANHOLE ARRANGEMENT)
SCALE: 1:40

NOTES:

1. References:
   - For location of manholes where these section cuts are taken, see sheets E-82 through E-92.
   - For manhole plans and sections, see sheets starting at E-111.
   - For typical manhole and duct bank details, see sheet E-119.
2. See sheet, E-120 sheet notes number 3 for installation of 4/0 AWG in the 600 V, TOS/COM and Non-Caltrans duct banks and manholes.

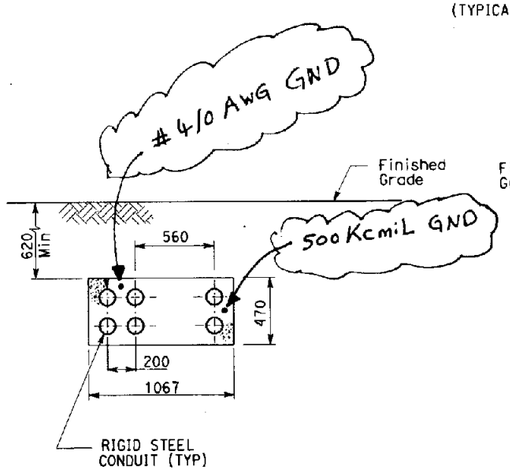

SECTION A-A
SCALE: 1:20

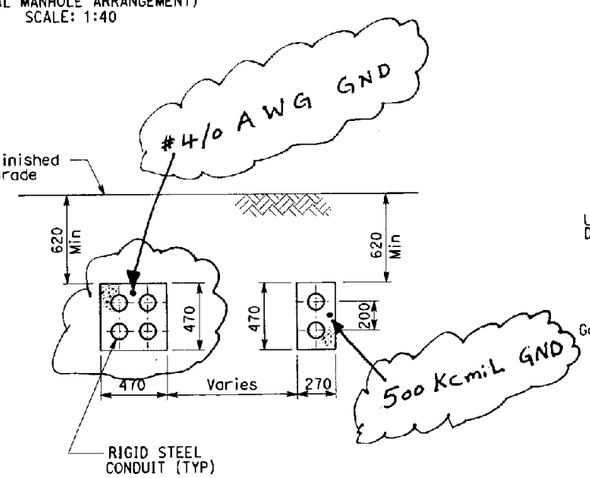

SECTION B-B
SCALE: 1:20

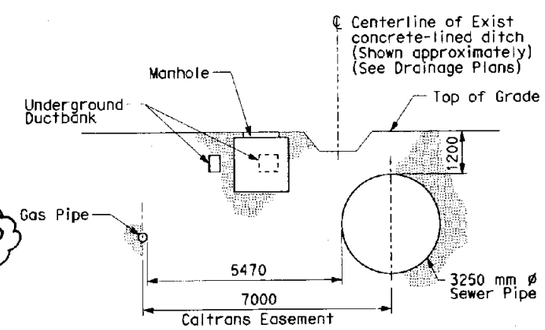

SECTION C-C
SCALE: 1:80

REGISTERED PROFESSIONAL ENGINEER PARVIZ BOOZARPOUR No. 12735 Exp. 9/30/08 ELECTRICAL STATE OF CALIFORNIA

Contract No. 04-0120L4
Page 3 of 7
CCO No. 50 Suppl. No. 0
Contractor MCM
Res. Engr. B. Ghafghazi
04-0120L4 8/6/08

DETAILS
UNDERGROUND AND ROADWAY AT-GRADE TYPICAL MANHOLE PLAN AND DUCT BANK SECTIONS
SCALE AS NOTED

E-106

CALCULATED/DESIGNED BY	FK	DATE 2/06	REVISED BY
CHECKED BY	AB	2/06	DATE REVISED

DESIGN OVERSIGHT
BEHZAD GOLEMOHAMMADI

STATE OF CALIFORNIA - DEPARTMENT OF TRANSPORTATION
Caltrans

ALL DIMENSIONS IN MILIMETERS UNLESS OTHERWISE SHOWN

FOR REDUCED PLANS ORIGINAL SCALE IS IN MILLIMETERS 0 20 40 60 80

DGN FILE =>40120lua106.dgn
USERNAME =>trphils

CU 04251 | EA 0120L1

LAST REVISION 00-00-00
DATE PLOTTED => 31-JAN-2007
TIME PLOTTED => 13:42

DIST	COUNTY	ROUTE	KILOMETER POST TOTAL PROJECT	SHEET NO	TOTAL SHEETS
04	Ala	80	1.6/2.7	478	643

Caltrans Metric

05/15/06
REGISTERED ELECTRICAL ENGINEER DATE

1-29-07
PLANS APPROVAL DATE

REGISTERED PROFESSIONAL ENGINEER JENS ERLINGSSON No. 8249 Exp. 9/30/08 ELECTRICAL STATE OF CALIFORNIA

PB POWER, Inc.
A Parsons Brinckerhoff Company
303 Second St., Suite 700N
San Francisco, CA 94107-1317

The State of California or its officers or agents shall not be responsible for the accuracy or completeness of electronic copies of this plan sheet.

To get to the caltrans web site, go to http://www.dot.ca.gov

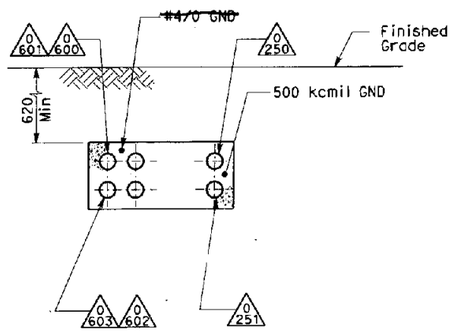

SECTION KK-KK
(E-82)
SCALE: 1:20

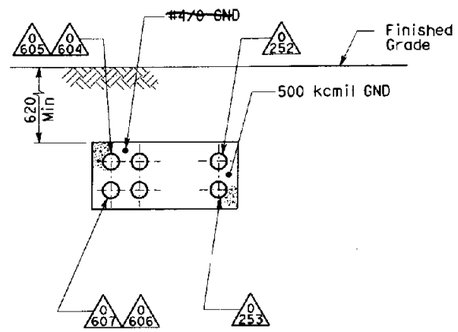

SECTION LL-LL
(E-82, E-83)
SCALE: 1:20

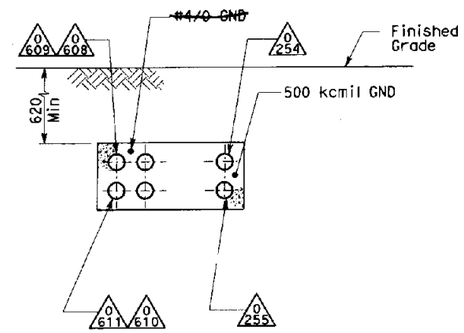

SECTION MM-MM
(E-83, E-84)
SCALE: 1:20

NOTES:

1. References:
   - For location of manholes where these section cuts are taken, see sheets E-82 through E-92.
   - For manhole plans and sections, see sheets starting at E-111.
   - For typical manhole and duct bank details, see sheet E-119.
   - For conduit and cable tray schedules, see sheets starting at E-224.

2. See sheet, E-120 sheet notes number 3 for installation of 4/0 AWG in the 600 V, TOS/COM and Non-Caltrans duct banks and manholes.

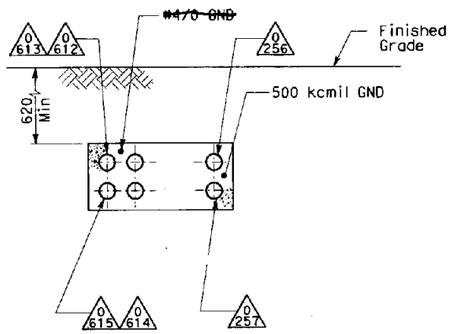

SECTION NN-NN
(E-84, E-85)
SCALE: 1:20

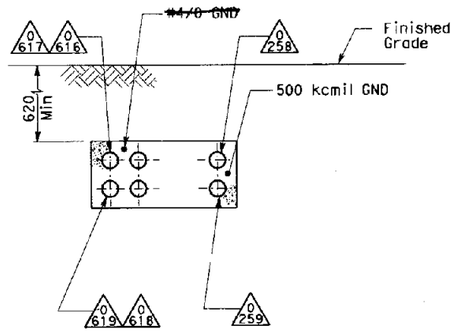

SECTION PP-PP
(E-85, E-86)
SCALE: 1:20

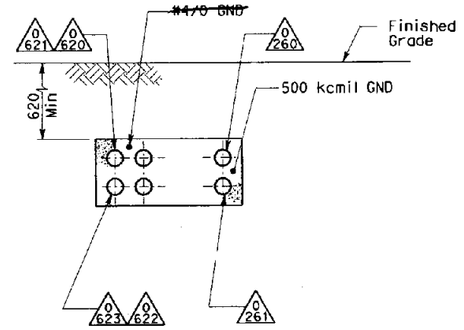

SECTION QQ-QQ
(E-86, E-87)
SCALE: 1:20

REGISTERED PROFESSIONAL ENGINEER PARVIZ BOOZARPOUR No. 12735 Exp. 9/30/08 ELECTRICAL STATE OF CALIFORNIA

REGISTERED PROFESSIONAL ENGINEER PARVIZ BOOZARPOUR No. 12735 Exp. ELECTRICAL STATE OF CALIFORNIA

Contract No. 04-0120L4
Page 4 of 7
CCO No. 50 Suppl. No. 0
Contractor MCM
Res. Engr. B. Ghafghazi
04-0120L4 8/6/08

DETAILS
UNDERGROUND AND ROADWAY AT-GRADE TYPICAL DUCT BANK SECTIONS
SCALE AS NOTED

E-107

ALL DIMENSIONS IN MILIMETERS UNLESS OTHERWISE SHOWN

FOR REDUCED PLANS ORIGINAL SCALE IS IN MILLIMETERS 0 20 40 60 80

DGN FILE => 40120lua107.dgn
USERNAME => trphils

CU 04251 | EA 0120L1

LAST REVISION 00-00-00 | DATE PLOTTED => 31-JAN-2007 | TIME PLOTTED => 13:42

STATE OF CALIFORNIA - DEPARTMENT OF TRANSPORTATION
Caltrans

DESIGN OVERSIGHT: BEHZAD GOLEMOHAMMADI

CALCULATED/DESIGNED BY: FK | DATE 2/06 | REVISED BY
CHECKED BY: AB | 2/06 | DATE REVISED

DIST	COUNTY	ROUTE	KILOMETER POST TOTAL PROJECT	SHEET No	TOTAL SHEETS
04	Ala	80	1.6/2.7	479	643

Caltrans Metric

REGISTERED ELECTRICAL ENGINEER 05/15/06 DATE

1-29-07
PLANS APPROVAL DATE

REGISTERED PROFESSIONAL ENGINEER JENS ERLINGSSON No. 8249 Exp. 9/30/08 ELECTRICAL STATE OF CALIFORNIA

PB POWER, Inc.
A Parsons Brinckerhoff Company
303 Second St., Suite 700N
San Francisco, CA 94107-1317

The State of California or its officers or agents shall not be responsible for the accuracy or completeness of electronic copies of this plan sheet.

To get to the caltrans web site, go to http://www.dot.ca.gov

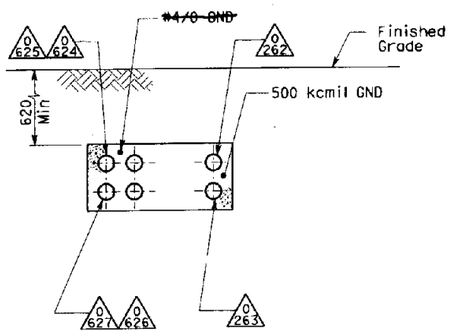

SECTION RR-RR
(E-87, E-88)
SCALE: 1:20

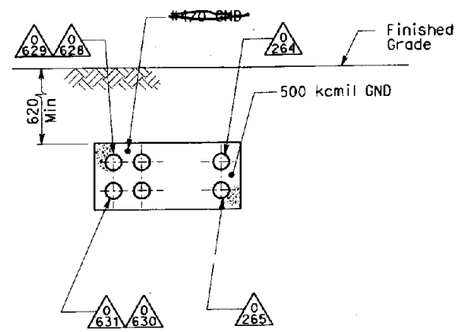

SECTION SS-SS
(E-88, E-89)
SCALE: 1:20

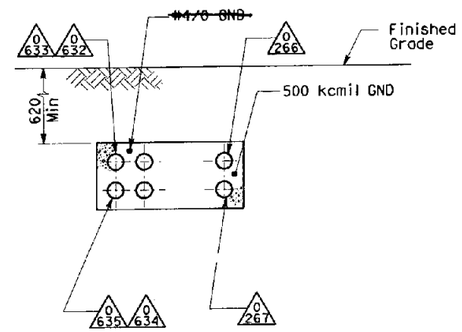

SECTION TT-TT
(E-89, E-90)
SCALE: 1:20

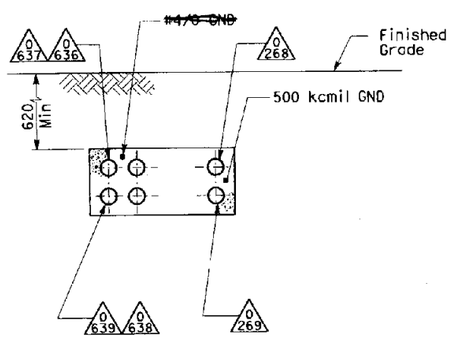

SECTION UU-UU
(E-90, E-91)
SCALE: 1:20

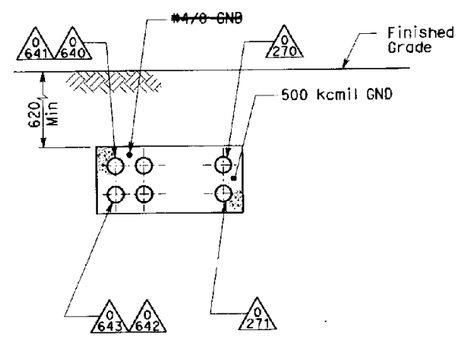

SECTION VV-VV
(E-91, E-92)
SCALE: 1:20

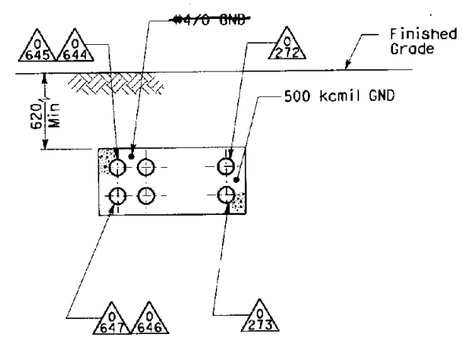

SECTION WW-WW
(E-92)
SCALE: 1:20

NOTES:

1. References:
   - For location of manholes where these section cuts are taken, see sheets E-82 through E-92.
   - For manhole plans and sections, see sheets starting at E-111.
   - For typical manhole and duct bank details, see sheet E-119.
   - For conduit and cable tray schedules, see sheets starting at E-224.
2. See sheet, E-120 sheet notes number 3 for installation of 4/0 AWG in the 600 V, TOS/COM and Non-Caltrans duct banks and manholes.

REGISTERED PROFESSIONAL ENGINEER PARVIZ BOOZARPOUR No. 12735 Exp. 9/30/08 ELECTRICAL STATE OF CALIFORNIA

Contract No. 04-0120L4
Page 5 of 7
CCO No. 50 Suppl. No. 0
Contractor MCM
Res. Engr. B. Ghafghazi
04-0120L4 8/6/08

DETAILS
UNDERGROUND AND ROADWAY AT-GRADE TYPICAL DUCT BANK SECTIONS
SCALE AS NOTED

E-108

CALCULATED/ DESIGNED BY	FK	DATE 2/06	REVISED BY
CHECKED BY	AB	2/06	DATE REVISED

DESIGN OVERSIGHT
BEHZAD GOLEMOHAMMADI

STATE OF CALIFORNIA - DEPARTMENT OF TRANSPORTATION
Caltrans

ALL DIMENSIONS IN MILIMETERS UNLESS OTHERWISE SHOWN

FOR REDUCED PLANS ORIGINAL SCALE IS IN MILLIMETERS 0 20 40 60 80

DGN FILE =>40120lua108.dgn
USERNAME =>trphils

CU 04251 EA 0120L1

LAST REVISION 00-00-00 DATE PLOTTED => 31-JAN-2007 TIME PLOTTED => 13:43

DIST	COUNTY	ROUTE	KILOMETER POST TOTAL PROJECT	SHEET No	TOTAL SHEETS
04	Ala	80	1.6/2.7	490	643

Caltrans Metric

REGISTERED ELECTRICAL ENGINEER — DATE 05/15/06

1-29-07
PLANS APPROVAL DATE

REGISTERED PROFESSIONAL ENGINEER — JENS ERLINGSSON No. 8249 Exp. 9/30/08 ELECTRICAL — STATE OF CALIFORNIA

PB POWER, Inc.
A Parsons Brinckerhoff Company
303 Second St., Suite 700N
San Francisco, CA 94107-1317

The State of California or its officers or agents shall not be responsible for the accuracy or completeness of electronic copies of this plan sheet.

To get to the Caltrans web site, go to: http://www.dot.ca.gov

Contract No. 04-0120L4
Page 6 of 7
CCO No. 50 Suppl. No. 0
Contractor MCM
Res. Engr. B. Ghafghazi

04-0120L4 8/6/08

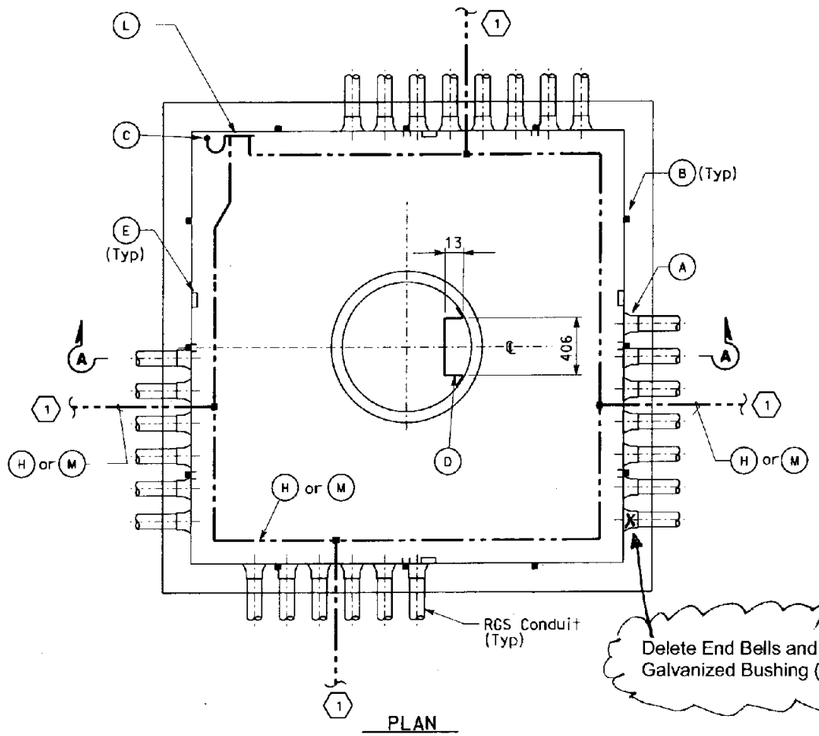

PLAN
SCALE 1:20

Delete End Bells and install Hot Dip Galvanized Bushing (Typical).

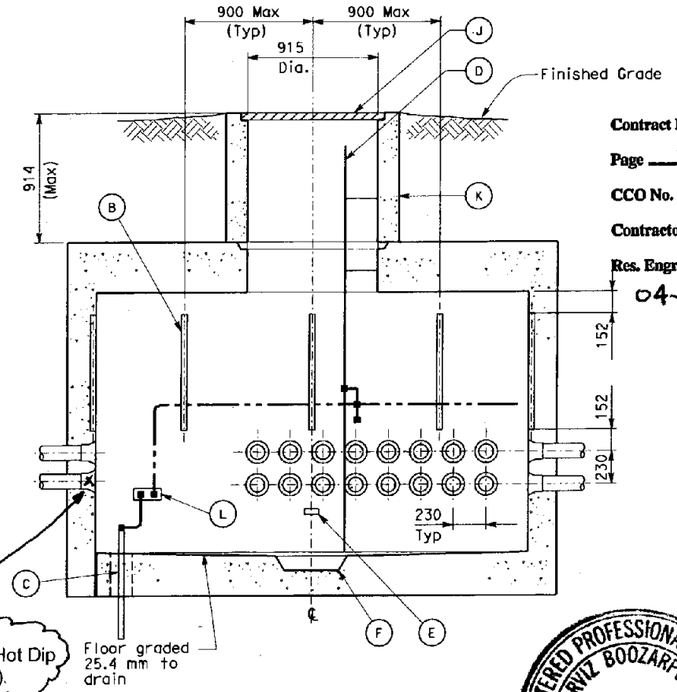

SECTION A-A
SCALE 1:20

TYPICAL MANHOLE DETAIL

Hot Dip Galvanized Bushing

LIST OF MATERIAL		
ITEM NO	DESCRIPTION	REMARKS
A	~~End bells~~. For size & location see manholes plans & sections	
B	41 mm X 41 mm concrete insert strut channel (flush mounted)	Hot dip galvanized
C	Copper clad ground rod 19 dia x 3050 long	
D	Ladder complete with supports	Hot dip galvanized
E	Pull iron-insert type	As required
F	305 mm Dia round x 102 mm deep sump	
H	500 kcmil bare copper ground conductor	For 15 kV duct banks and manholes
J	Cast iron manhole cast cover with engraved nameplate	See notes 1 and 8
K	Manhole necking or riser	Length as required
L	Ground copper bar, 6 mm thick x 100 mm high x 600 mm long	
M	#4/0 AWG bare copper ground	For 600 V, TOS/COM and Non-Caltrans duct banks and manholes

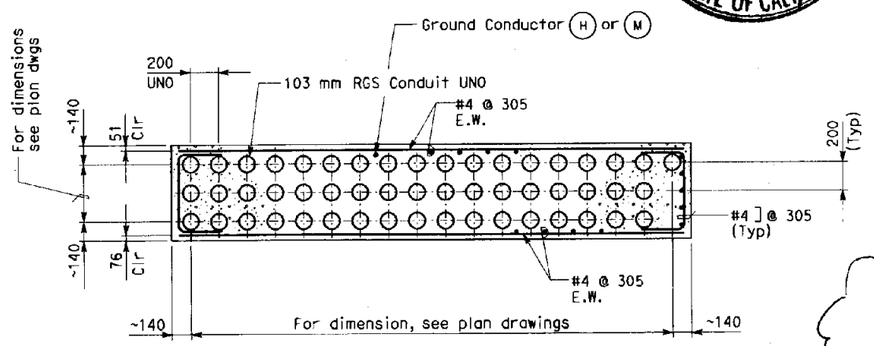

TYPICAL DUCT BANK DETAIL

SCALE 1:20

LIST OF MATERIAL		
ITEM NO	DESCRIPTION	REMARKS
N	#3/0 AWG bare copper ground	For 15 KV, 600V manholes
O	#4 AWG bare copper ground	[redacted] TOS/COM and Non-Caltrans manholes

ALL DIMENSIONS ARE IN MILLIMETERS UNLESS OTHERWISE SHOWN

REGISTERED PROFESSIONAL ENGINEER — PARVIZ BOOZARPOUR — No. 12735 Exp. 9/30/08 — ELECTRICAL — STATE OF CALIFORNIA

SHEET NOTES:

(1) See E-120 for locations.

NOTES:

1. Manhole, cast iron ring and cover shall be designed for H-20 traffic loading.
2. Ultimate compressive strength f'c = 25 MPa.
3. Steel reinforcement yield strength Fy = 414 MPa.
4. All manhole joints shall be primed with joint primer by manhole supplier. In addition, all joints shall be made watertight by using joint sealant.
5. Prior to setting the manhole, the Contractor shall prepare the site by providing a minimum of 152 mm of sand or other suitable base material. The base material shall be compacted and graded to the required level.
6. Manholes shall comply with requirements of ASTM C478 and ASTM C858, as applicable.
7. The ladder shall be designed to the specifications in the latest revision of American National Standard Institute's publication A1413, safety requirements for "Fixed Ladder".
8. Manhole cover engraved nameplates shall read as follows:
   a) Caltrans High Voltage — Manholes No. 1,5,9,18,20,22,24,26,28, 30,32,34,36,38 and 40.
   b) Caltrans 600 V — Manholes No. 2,6 and 10.
   c) Caltrans TOS&COM — Manholes No. 4,8,12,19,21,23,25, 27,29,31,33,35,37,39 and 41.
   d) Non-Caltrans Utility — Manholes No. 7 and 11.
9. References:
   - For duct bank and manhole plans, see sheets E-80 through E-92.
   - For manhole plans and sections, see sheets E-111 thru E-118.
   - For duct bank sections, see sheets E-106 through E-118.
   - For grounding interface, see sheet E-120.
10. All exposed metal shall be grounded.
11. Hot Dip Galvanized bushing shall be installed to all RGS conduits.
12. Each individual jumper wire item numbers N or O from list of material shall be connected to the Hot Dip Galvanized bushing and shall be exothermically welded to either item numbers H or M from list of material.
13. Connecting all bushings with one bare copper ground is Not Permitted.

DETAILS
UNDERGROUND AND ROADWAY AT-GRADE TYPICAL MANHOLE AND DUCT BANK
SCALE AS NOTED

E-119

DATE	FR	REVISED BY	DATE REVISED
2/06	AB	2/06	

CALCULATED/DESIGNED BY — CHECKED BY

DESIGN OVERSIGHT — BEHZAD GOLEMOHAMMADI

STATE OF CALIFORNIA - DEPARTMENT OF TRANSPORTATION — Caltrans

LAST REVISION 00-00-00 — DATE PLOTTED => 06-FEB-2007 TIME PLOTTED => 13:04

FOR REDUCED PLANS ORIGINAL SCALE IS IN MILLIMETERS 0 20 40 60 80

DGN FILE =>401201ua119.dgn
USERNAME =>trpierce

CU 04251 | EA 0120L1

DIST	COUNTY	ROUTE	KILOMETER POST TOTAL PROJECT	SHEET No	TOTAL SHEETS
04	Ala	80	1.6/2.7	491	643

REGISTERED ELECTRICAL ENGINEER 05/15/06 DATE

1-29-07
PLANS APPROVAL DATE

REGISTERED PROFESSIONAL ENGINEER JENS ERLINGSSON No. 8249 Exp. 9/30/08 ELECTRICAL STATE OF CALIFORNIA

PB POWER, Inc.
A Parsons Brinckerhoff Company
303 Second St., Suite 700N
San Francisco, CA 94107-1317

The State of California or its officers or agents shall not be responsible for the accuracy or completeness of electronic copies of this plan sheet.

To get to the Caltrans web site, go to: http://www.dot.ca.gov

Caltrans Metric

NOTES:

1. References:
   - For Mole Substation grounding plan, see sheet AE-4.
   - For duct banks and manholes plans, see sheets E-80 through E-92.
   - For typical manhole and duct bank details, see sheet E-119.
   - For girder westbound grounding plan, see sheet E-42.
   - For girder eastbound grounding plan, see sheet E-74.
   - For Pier E22L, see sheet E-99.
   - For Pier E22R, see sheet E-98.

SHEET NOTES:

(1) 500 kcmil bare copper system grounding conductor routed in the 12.47 kV duct banks and through the 12 kV manholes as shown.

(2) At Piers E22L and E22R, two 250 kcmil bare copper ground conductors shall be exothermically welded to the 500 kcmil bare copper system grounding conductor and exothermically welded to the ~~bent footing cover~~. Embed the 500 kcmil bare copper system grounding conductor in the bent column and run up to the girder to be connected to the two ground bars located on each side of the bent.

PILE SHEAR RINGS

(3) Wherever the 600 V, Non-Caltrans Utilities and the TOS/COM duct banks separate from the 12 kV duct bank, #4/0 AWG bare copper grounds shall be exothermically welded to the 500 kcmil system grounding conductor and routed to the 600 V, the Non-Caltrans Utilities and the TOS/COM manholes respectively.

(4) 250 kcmil bare copper system grounding conductor routed in the 600 V duct banks from piers E22R and E22L to Manhole-10, and from Manhole-10 in the 600 V duct bank. Coil 3000 mm long for connection by others.

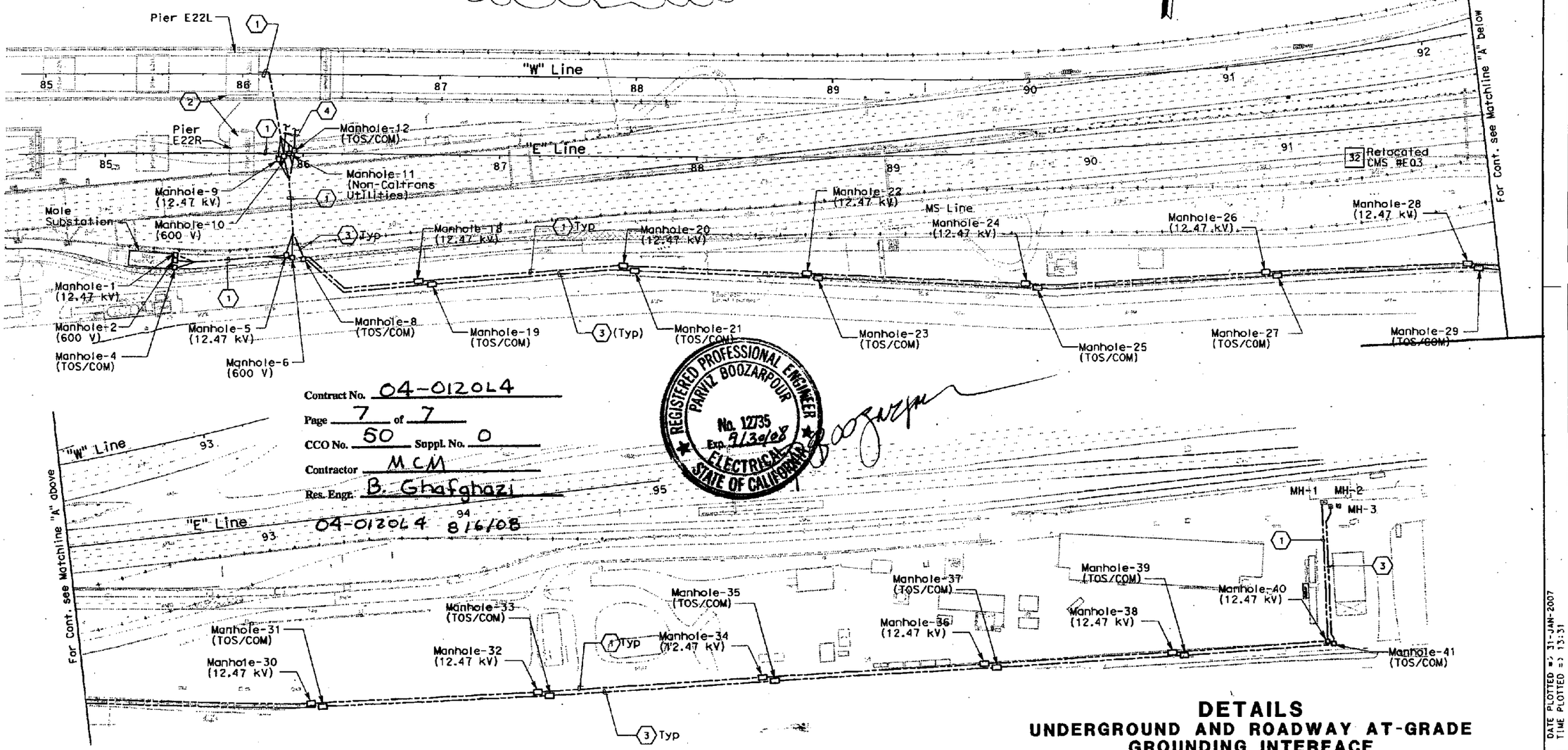

DETAILS
UNDERGROUND AND ROADWAY AT-GRADE GROUNDING INTERFACE
SCALE: 1:1000

E-120

	DATE	REVISED BY	DATE REVISED
FK	2/06	AB	2/06

CALCULATED/DESIGNED BY FK — CHECKED BY AB

DESIGN OVERSIGHT BEHZAD GOLEMOHAMMADI

STATE OF CALIFORNIA - DEPARTMENT OF TRANSPORTATION — Caltrans

LAST REVISION 00-00-00 — DATE PLOTTED => 31-JAN-2007 TIME PLOTTED => 13:31

FOR REDUCED PLANS ORIGINAL SCALE IS IN MILLIMETERS 0 20 40 60 80

DGN FILE =>401201u0120.dgn
USERNAME =>trrichf

CU 04251 EA 0120L1

STATE OF CALIFORNIA - DEPARTMENT OF TRANSPORTATION

CONTRACT CHANGE ORDER MEMORANDUM

DATE: 5/9/2008 Page 1 of 1

TO: AMER BATA / BEN GHAFGHAZI	FILE: E.A. 04 - 0120L4
FROM: BEN GHAFGHAZI	CO-RTE-PM ALA-80-1.6/2.7
	FED. NO. NO FED AID
CCO#: 50 SUPPLEMENT#: 0 Category Code: CBPC	CONTINGENCY BALANCE (incl. this change) $14,454,920.20
COST: $81,761.58 INCREASE ☑ DECREASE ☐	HEADQUARTERS APPROVAL REQUIRED? ☐ YES ☑ NO
SUPPLEMENTAL FUNDS PROVIDED: $0.00	IS THIS REQUEST IN ACCORDANCE WITH ENVIRONMENTAL DOCUMENTS? ☑ YES ☐ NO
CCO DESCRIPTION: Revise grounding details	**PROJECT DESCRIPTION:** Construct bridge, roadway, building and electrical system.

Original Contract Time:	Time Adj. This Change:	Previously Approved CCO Time Adjustments:	Percentage Time Adjusted: (including this change)	Total # of Unreconciled Deferred Time CCO(s): (including this change)
810 Day(s)	0 Day(s)	0 Day(s)	0 %	6

THIS CHANGE ORDER PROVIDES FOR:

Revising grounding details per sheets 2 of 7 through 7 of 7 of this CCO.

This change is necessary to provide the proper grounding for electrical systems on this contract. This CCO corrects or revises details that were shown incorrectly or missing from the original plans.

This work will be paid as Extra Work at Lump Sum of $81,761.58, which can be financed from the contingency fund. A detailed cost analysis is on file.

This change has been discussed and concurred with Parviz Boozarpour of Electrical Design, Jaime Gutierrez of Project Development and Phil Harsono of Maintenance.

adjustment of the contract time is warranted, as this change does not affect the controlling operation.

CONCURRED BY:			
Construction Engineer:	Ben Ghafghazi	Date	8/6/08
Bridge Engineer:		Date	
Project Engineer:	Jaime Gutierrez	Date	5/19/08
Project Manager:		Date	
FHWA Rep.:		Date	
Environmental:		Date	
Other (specify):	Parviz Boozapour, Electrical Desig	Date	5/7/08
Other (specify):	Phil Harsono, Maintenance	Date	5/16/08
District Prior Approval By:		Date	
HQ (Issue Approve) By:		Date	
Resident Engineer's Signature:		Date	8/6/08

ESTIMATE OF COST

	THIS REQUEST	TOTAL TO DATE
ITEMS	$0.00	$0.00
FORCE ACCOUNT	$0.00	$0.00
AGREED PRICE	$81,761.58	$81,761.58
ADJUSTMENT	$0.00	$0.00
TOTAL	$81,761.58	$81,761.58

FEDERAL PARTICIPATION

☐ PARTICIPATING ☐ PARTICIPATING IN PART ☑ NONE
☐ NON-PARTICIPATING (MAINTENANCE) ☐ NON-PARTICIPATING

FEDERAL SEGREGATION (if more than one Funding Source or P.I.P. type)
☑ CCO FUNDED PER CONTRACT ☐ CCO FUNDED AS FOLLOWS

FEDERAL FUNDING SOURCE	PERCENT

ADA Notice: For individuals with sensory disabilities, this document is available in alternate formats. For information call: (916) 654-6410 or TDD (916) 654-3880 or write Records and Forms Management, 1120 N Street, MS-89, Sacramento, CA 95814.

STATE OF CALIFORNIA - DEPARTMENT OF TRANSPORTATION

CONTRACT CHANGE ORDER

Change Requested by: Engineer

CCO 52	Suppl. No. 0	Contract No. 04 - 0120L4	Road ALA-80-1.6/2.7	FED. AID LOC.: NO FED AID

To: **M C M CONSTRUCTION INC**

You are directed to make the following changes from the plans and specifications or do the following described work not included in the plans and specifications for this contract. ***NOTE: This change order is not effective until approved by the Engineer.***

Description of work to be done, estimate of quantities and prices to be paid. (Segregate between additional work at contract price, agreed price and force account.) Unless otherwise stated, rates for rental of equipment cover only such time as equipment is actually used and no allowance will be made for idle time. This last percentage shown is the net accumulated increase or decrease from the original quantity in the Engineer's Estimate.

Add specifications for 15 kv cable.

Adjustment of Compensation at Lump Sum:

All 15 kv cable for use on this contract shall comply with specifications on sheets 2 of 3 and 3 of 3 of this CCO. For this work the Contractor will be paid the sum of $70,100.00. This sum constitutes full compensation, including markups, for this change.

Adjustment of Compensation at Agreed Lump Sum $70,100.00

Estimated Cost: Increase ☑ **Decrease** ☐ **$70,100.00**

By reason of this order the time of completion will be adjusted as follows: 0 days

Submitted by		
Signature	Resident Engineer BEN GHAFGHAZI	Date 7/21/08
Approval Recommended by		
Signature	Construction Manager Amer Bata	Date 7/16/08
Engineer Approval by		
Signature	Construction Manager Amer Bata	Date 8/15/08

We the undersigned contractor, have given careful consideration to the change proposed and agree, if this proposal is approved, that we will provide all equipment, furnish the materials, except as may otherwise be noted above, and perform all services necessary for the work above specified, and will accept as full payment therefor the prices shown above.

NOTE: If you, the contractor, do not sign acceptance of this order, your attention is directed to the requirements of the specifications as to proceeding with the ordered work and filing a written protest within the time therein specified.

Contractor Acceptance by		
Signature	(Print name and title) EDMUNDO A. RUCHI, TREASURER	Date 7/29/08

E. DC Resistance of all insulated conductors and metallic shields.
F. Dimensional Verification of all extruded layers.
G. Absence of water in conductors and interfaces confirmed.

Cable Accessories

The manufacturer of the splices and terminations shall have a minimum of 15 years specialized in manufacturing of heat shrinkable cable accessories. The manufacturer of the splices and terminations shall be the Raychem Corporation or approved equal.
The cable splicer shall have a minimum of five years experience and be certified by the splice and cable termination manufacturer. The splicer shall provide a resume documenting his experience and qualifications to be approved on this project.

Cable Terminations

The Termination shall be IEEE 48, Class 1, heat-shrinkable cable terminations in kit form, capable of properly terminating cables specified in this section. Terminations for single-conductor cables shall consist of heat-shrinkable radiation crosslinked high dielectric constant linear stress relief material and heat-shrinkable radiation crosslinked non-tracking outer insulation. Terminations shall contain a high relative permittivity electric stress relief mastic for insulation shield cutback treatment and a heat-activated sealant for environmental sealing.
In addition to the components described above, three-conductor kits shall contain heat-shrinkable components to seal the cable jacket, phase conductors, ground wire and rejacket phase and ground conductors.

Cable Splices

Splices of high voltage cable shall be avoided if possible. Where necessary, because of constructibility reasons, splice locations shall be approved by the Engineer. In general, splices of high voltage cables shall be scheduled so that the length of cable between splices is approximately 400 meters. All 15 kV splices shall be enclosed on a 15 kV splice box (Type PB-3A). A splice shall be scheduled at the construction boundaries. Where possible, longer cable runs are encouraged. The Splices, where necessary, shall be IEEE 404, heat shrinkable cable splices in kit form, capable of properly splicing cables specified in this section. Splice kits shall contain all necessary components to reinstate primary cable insulation, metallic shielding and grounding systems and overall jacket to the equivalent of the cable itself. Splices shall be of a uniform cross-section and shall consist of heat-shrinkable radiation crosslinked insulation. The outer insulating layer shall be bonded to a conducting layer for shielding. The splice shall be rejacketed with a heavy-wall, heat-shrinkable sealant lined sleeve to provide a waterproof hot melt adhesive seal. Splices shall contain heat-shrinkable radiation cross-linked high dielectric constant linear stress relief material. Splices shall contain a high relative permittivity electric stress relief mastic for insulation shield cutback treatment and a heat-activated sealant for environmental sealing. Kits shall allow splicing cables with different types of insulation, conductor sizes, and shielding construction. Kits shall accommodate commercially available standard connectors.

Cable End Sealing Caps

The end seal caps shall be heat-shrinkable crosslinked polymeric end sealing caps capable of sealing cables specified in this section. End caps shall be precoated with a heat activated sealant.

DC High Potential Test

Perform DC high potential test of each conductor in accordance with NEMA WC 5.

REGISTERED PROFESSIONAL ENGINEER
PARVIZ BOOZARPOUR
No. 12735
Exp. 9/30/08
ELECTRICAL
STATE OF CALIFORNIA

CONTRACT NO. 04-0120L4

CCO # 52

Sheet 3 of 3

15 kV CABLE

The 15 kV shielded single conductor power cable shall be 15 kV, 133 percent insulation rated power cable designed to operate at conductor temperatures of 90°C normal, 130°C emergency, and 250°C short circuit conditions as defined by ICEA S-93-639 (NEMA WC-78) and (UL) Standard 1072. The cable shall be suitable for installations above or below grade, indoors or outdoors, and in wet or dry locations. The qualifying cable shall be (UL) labeled as MV-90, Sunlight Resistant and for cable tray use in accordance with UL Standard 1072.

Conductors

The conductors shall be compressed, Class B stranded copper and shall be in accordance with the requirements of ICEA S-93-639. The copper conductors shall consist of all bare strands or tin-coated strands in the outer layer in conformance with the requirements in ASTM Designations: B 3, B 8 and B 33. Conductors shall be unbroken for the full length of the reels specified in the Purchase Order. Reels containing splices will be rejected.

Conductor Shield

The conductor shielding shall consist of an extruded, black-colored, nonmetallic semiconducting EPR thermosetting compound material in conformance with the provisions in Section 2.7 of ICEA S-93-639. The minimum average thickness shall be 0.5 mm.

Insulation

The insulation shall be a discharge resistant, ethylene propylene (EP) based compound and be listed by Underwriters Laboratories. The minimum average thickness of the insulation shall be 5.59 mm. The manufacturer shall perform the Insulation Corona Discharge Resistance Test (3.9.3.3 of ICEA S-93-639) tested in conformance with the requirements in ASTM Designation: D 2275-89, "Standard Test Method for Voltage Endurance of Solid Electrical insulating materials Subjected to Partial Discharges (Corona) on the Surface," and submit the results to the Engineer before acceptance of the cable.

Insulation Shielding

The insulation shielding shall consist of a nonmetallic semiconducting EPR material extruded directly over the insulation and a 0.12-mm bare copper tape. The nonmetallic semi conducting layer shall be black-colored with properties and thickness conforming to the requirements of Table 4a of ICEA S-68-516-93-639 and Tables 14.2 and 14.3 of UL-1072. The layer shall be free stripping from the EP insulation. The 0.12-mm bare copper tape shall be helical applied with a 15 percent overlap, directly over the nonmetallic layer.

Metallic Shield

The metallic shield shall be coated copper tape, helically applied with a minimum overlap of 12.5 percent, directly over the nonmetallic layer.

Overall Jacket

The overall jacket shall be extruded black-colored Polyvinyl Chloride (PVC) material with physical properties and thickness in accordance with Section 4.4.5 and Table 4-6 of ICEA S93-639 and shall surface printed as required by UL Standard 1072.

REGISTERED PROFESSIONAL ENGINEER
PARVIZ BOOZARPOUR
No. 12735
Exp. 9/30/08
ELECTRICAL
STATE OF CALIFORNIA

Production Testing

Production testing shall consist of the following:

A. Continuous DC Spark testing of the non-conducting stress control layer prior to extrusion of the EP insulation.
B. Mooney Viscosity, Scorch Viscosity, and Specific Gravity of each batch of the EP insulation prior to extrusion.
C. AC Voltage Withstand test for a 5-minute duration, of each finished cable at 35 kV.
D. Volume Resistivity of the nonmetallic shield.

CONTRACT NO. 04-0120L4

CCO # 52

Sheet 2 of 3

STATE OF CALIFORNIA - DEPARTMENT OF TRANSPORTATION

CONTRACT CHANGE ORDER MEMORANDUM

DATE: 5/15/2008 Page 1 of 1

TO: AMER BATA / BEN GHAFGHAZI	FILE: E.A. 04 - 0120L4
FROM: BEN GHAFGHAZI	CO-RTE-PM ALA-80-1.6/2.7
	FED. NO. NO FED AID
CCO#: 52 SUPPLEMENT#: 0 Category Code: CBSA	CONTINGENCY BALANCE (incl. this change) $14,903,736.10
COST: $70,100.00 INCREASE ☑ DECREASE ☐	HEADQUARTERS APPROVAL REQUIRED? ☑ YES ☐ NO
SUPPLEMENTAL FUNDS PROVIDED: $0.00	IS THIS REQUEST IN ACCORDANCE WITH ENVIRONMENTAL DOCUMENTS? ☑ YES ☐ NO
CCO DESCRIPTION: Revise 15 kv specification	**PROJECT DESCRIPTION:** Construct bridge, roadway, building and electrical system.

Original Contract Time:	Time Adj. This Change:	Previously Approved CCO Time Adjustments:	Percentage Time Adjusted: (including this change)	Total # of Unreconciled Deferred Time CCO(s): (including this change)
810 Day(s)	0 Day(s)	0 Day(s)	0 %	5

THIS CHANGE ORDER PROVIDES FOR:

Supplying 15 kv cable per specifications on sheets 2 of 3 and 3 of 3 of the CCO.

This change is necessary because specifications for 15 kv cable were not included in the Special Provisions. The Contractor provided a submittal that meets general industry standards for power cable. This cable is what the Contractor used to base his bid on. After review by Caltrans Electrical Design it was determined that the insulation and shielding do not meet the parameters that Caltrans is looking for. There is additional cost for the cable due to Caltrans higher standard. This CCO will compensate the Contractor for this additional cost.

This work will be paid as Adjustment of Compensation at Lump Sum of $70,100.00, which can be financed from the contingency fund. A detailed cost analysis is on file.

This change has been discussed and concurred with Parviz Boozarpour of Electrical Design, Jaime Gutierrez of Project Development and Phil Harsono of Maintenance. Ken Terpstra, Project Manager, concurs with this change. An Issue and Approved was granted by Ken Darby of Headquarters Construction on June 6, 2008

No adjustment of the contract time is warranted, as this change does not affect the controlling operation.

CONCURRED BY:

Construction Engineer:	Ben Ghafghazi	Date 7/2/08
Bridge Engineer:		Date
Project Engineer:	Jaime Gutierrez	Date 5/19/08
Project Manager:	Ken Terprstra	Date 6/3/08
FHWA Rep.:		Date
Environmental:		Date
Other (specify):	Parviz Boozarpour, Elec. Design	Date 5/12/08
Other (specify):	Phil Harsono, Maintenance	Date 5/16/08
District Prior Approval By:		Date
HQ (Issue Approve) By:	Ken Darby	Date 6/6/08
Resident Engineer's Signature:		Date 7/2/08

ESTIMATE OF COST

	THIS REQUEST	TOTAL TO DATE
ITEMS	$0.00	$0.00
FORCE ACCOUNT	$0.00	$0.00
AGREED PRICE	$0.00	$0.00
ADJUSTMENT	$70,100.00	$70,100.00
TOTAL	$70,100.00	$70,100.00

FEDERAL PARTICIPATION

☐ PARTICIPATING ☐ PARTICIPATING IN PART ☑ NONE
☐ NON-PARTICIPATING (MAINTENANCE) ☐ NON-PARTICIPATING

FEDERAL SEGREGATION (if more than one Funding Source or P.I.P. type)
☑ CCO FUNDED PER CONTRACT ☐ CCO FUNDED AS FOLLOWS

FEDERAL FUNDING SOURCE	PERCENT

ADA Notice: For individuals with sensory disabilities, this document is available in alternate formats. For information call: (916) 654-6410 or TDD (916) 654-3880 or write Records and Forms Management, 1120 N Street, MS-89, Sacramento, CA 95814.

STATE OF CALIFORNIA - DEPARTMENT OF TRANSPORTATION

CONTRACT CHANGE ORDER

Change Requested by: Engineer

CCO 53	Suppl. No. 0	Contract No. 04 - 0120L4	Road ALA-80-1.6/2.7	FED. AID LOC.: NO FED AID

M C M CONSTRUCTION INC

You are directed to make the following changes from the plans and specifications or do the following described work not included in the plans and specifications for this contract. ***NOTE: This change order is not effective until approved by the Engineer.***

Description of work to be done, estimate of quantities and prices to be paid. (Segregate between additional work at contract price, agreed price and force account.) Unless otherwise stated, rates for rental of equipment cover only such time as equipment is actually used and no allowance will be made for idle time. This last percentage shown is the net accumulated increase or decrease from the original quantity in the Engineer's Estimate.

Adjustment of Compensation at Lump Sum:

Delete fiberglass grating from bikepath grating detail on the eastbound structure as shown on sheet 2 of 3 and 3 of 3 of this CCO. Place 25 mm plywood in lieu of grating. For this work the contractor will credit the State the sum of $12,103.00. This sum constitutes full compensation, including markups, for this change.

~~Estimated~~ Total cost of Adjustment of Compensation at Lump Sum .....($12,103.00)

Estimated Cost: Increase ☐ **Decrease** ☑ **($12,103.00)**

By reason of this order the time of completion will be adjusted as follows: 0 days

Submitted by		
Signature	~~Resident~~ Engineer BEN GHAFGHAZI	Date 8/28/08
Approval Recommended by		
Signature	Construction Engineer Ben Ghafghazi	Date 8/28/08
Engineer Approval by		
Signature	Construction Manager Amer Bata	Date 9/12/08

We the undersigned contractor, have given careful consideration to the change proposed and agree, if this proposal is approved, that we will provide all equipment, furnish the materials, except as may otherwise be noted above, and perform all services necessary for the work above specified, and will accept as full payment therefor the prices shown above.

NOTE: If you, the contractor, do not sign acceptance of this order, your attention is directed to the requirements of the specifications as to proceeding with the ordered work and filing a written protest within the time therein specified.

Contractor Acceptance by		
Signature	(Print name and title) EDMUNDO A. PUCHI, TREASURER	Date 9/9/08

DIST.	COUNTY	ROUTE	KILOMETER POST TOTAL PROJECT	SHEET NO.	TOTAL SHEETS
04	Ala	80	1.6/2.7	292R1	643

REGISTERED ENGINEER - CIVIL
1-29-07
PLANS APPROVAL DATE

The State of California or its officers or agents shall not be responsible for the accuracy or completeness of electronic copies of this plan sheet.

T.Y. LIN / MOFFATT & NICHOL
TWO HARRISON STREET, SUITE 500
SAN FRANCISCO, CA 94105

LIM & NASCIMENTO ENGINEERING CORPORATION
12 MAUCHLY, BLDG L
IRVINE, CA 92618

STAMP IS VALID FOR REVISION 1 ONLY

MARK	DATE	DESCRIPTIONS	BY	CH'D
1	5/13/08	FIBERGLASS GRATING CHANGED TO STEEL GRATING	MSC	TWD

REVISION(S)

CONTRACT CHANGE ORDER NO. 53
SHEET 2 OF 3 04-0120L4

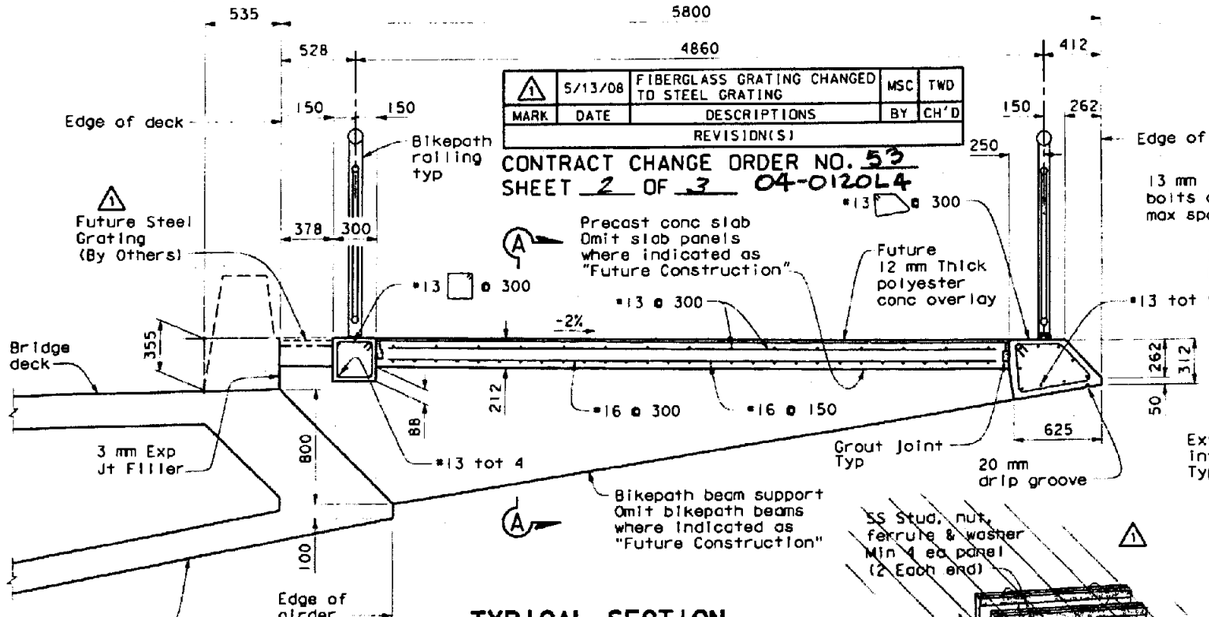

TYPICAL SECTION
1:20

Note:
Place Bikepath slab and edge beams after stressing of EB Approach Structure is completed.

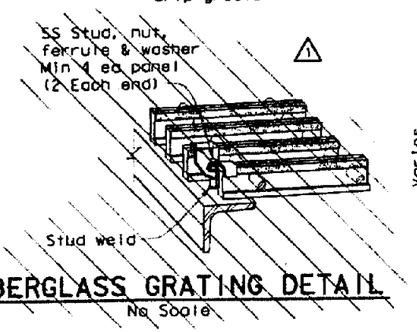

FIBERGLASS GRATING DETAIL
No Scale

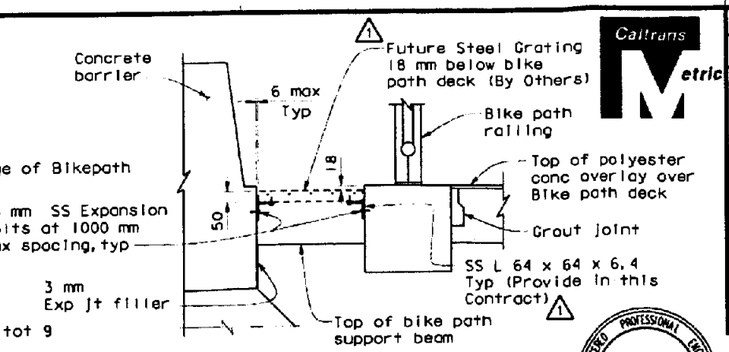

BIKEPATH GRATING DETAIL
1:10

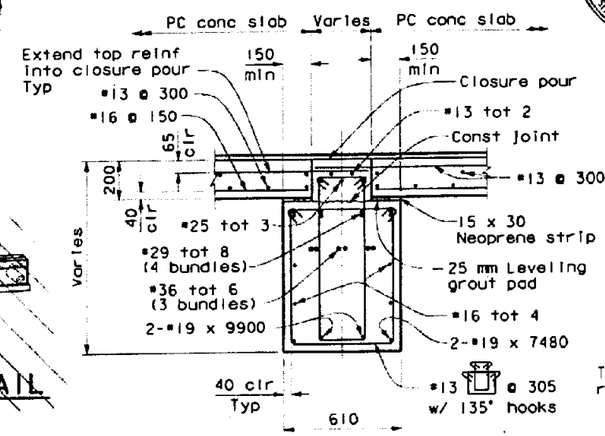

SECTION A-A
1:15

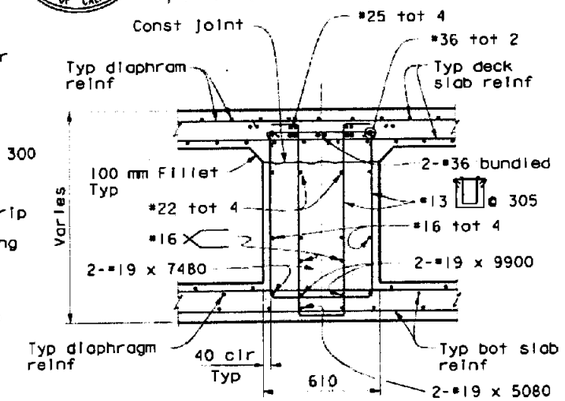

SECTION B-B
1:15

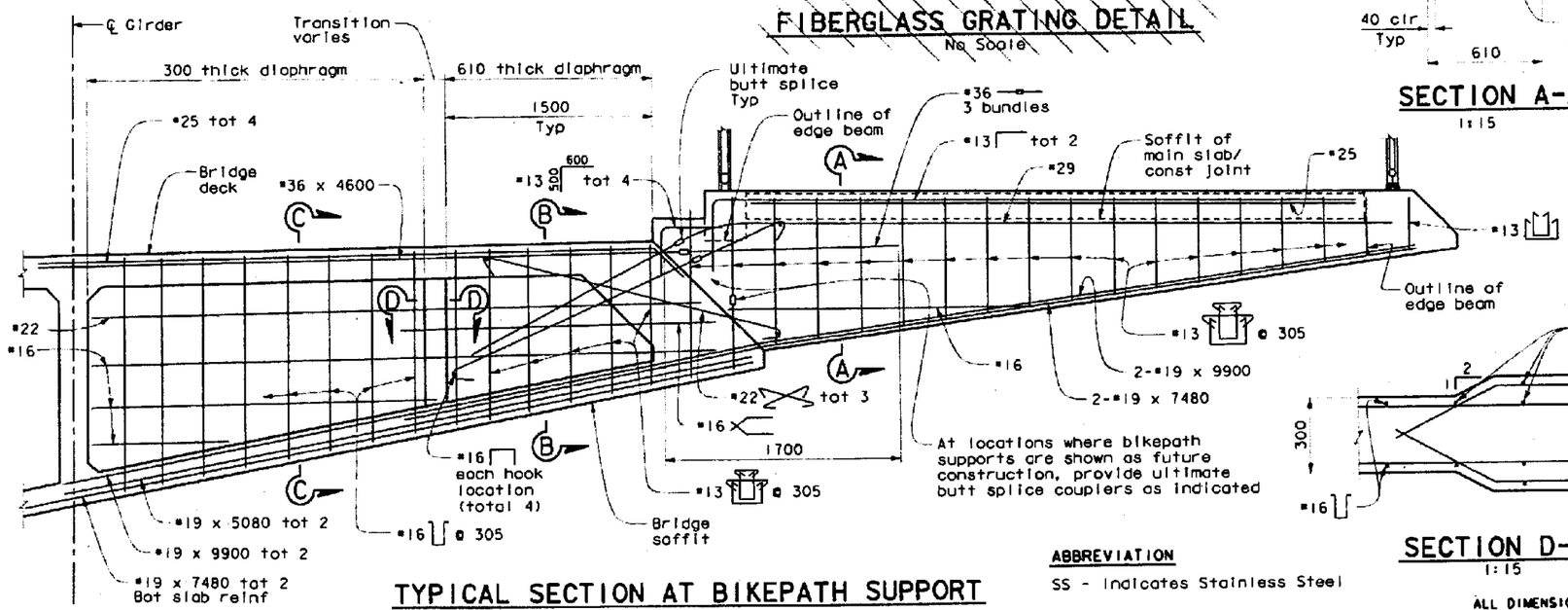

TYPICAL SECTION AT BIKEPATH SUPPORT
1:20

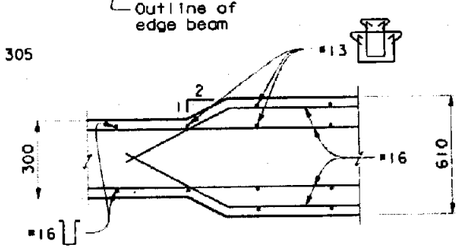

SECTION D-D
1:15

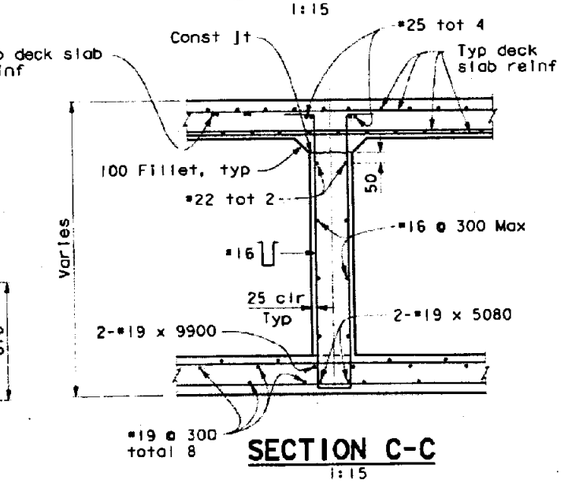

SECTION C-C
1:15

ABBREVIATION

SS - Indicates Stainless Steel

ALL DIMENSIONS ARE IN MILLIMETERS UNLESS OTHERWISE SHOWN

DESIGN OVERSIGHT
SAM ARFAD FRANCISCO CAMPIO DERNARD CHAN HASAN EL-NATUR
8-10-06
SIGN OFF DATE

	BY	CHECKED
DESIGN	M. CHAR	T. DUDLEY
DETAILS	N. MORCILLO/M. ANDRASEK	M. CHAR
QUANTITIES	N. MORCILLO/Y. KIM	V. SIVAKOLUNDU/T. DUDLEY

PREPARED FOR THE STATE OF CALIFORNIA DEPARTMENT OF TRANSPORTATION

MOHAN S. CHAR
PROJECT ENGINEER

CU 04
EA 0120L1

BRIDGE NO. 34-0006L/R
KILOMETER POST 1.6

SAN FRANCISCO OAKLAND BAY BRIDGE
EAST SPAN SEISMIC SAFETY PROJECT

OAKLAND APPROACH STRUCTURES - PHASE I

EASTBOUND BIKEPATH DETAILS NO. 2

DISREGARD PRINTS BEARING EARLIER REVISION DATES

179 224

Rev. Date: 5-18-98

ORIGINAL SCALE IN MILLIMETERS FOR REDUCED PLANS 0 10 20 30 40 50 60 70 80 90 100

To get to the Caltrans web site, go to: http://www.dot.ca.gov

Caltrans Metric

DIST.	COUNTY	ROUTE	KILOMETER POST TOTAL PROJECT	SHEET NO.	TOTAL SHEETS
04	Ala	80	1.6/2.7	293R1	643

REGISTERED ENGINEER - CIVIL

1-29-07
PLANS APPROVAL DATE

REGISTERED PROFESSIONAL ENGINEER A.L. ELY No. 18880 Exp. 6-30-07 CIVIL STATE OF CALIFORNIA

The State of California or its officers or agents shall not be responsible for the accuracy or completeness of electronic copies of this plan sheet.

T.Y. LIN / MOFFATT & NICHOL
TWO HARRISON STREET, SUITE 500
SAN FRANCISCO, CA 94105

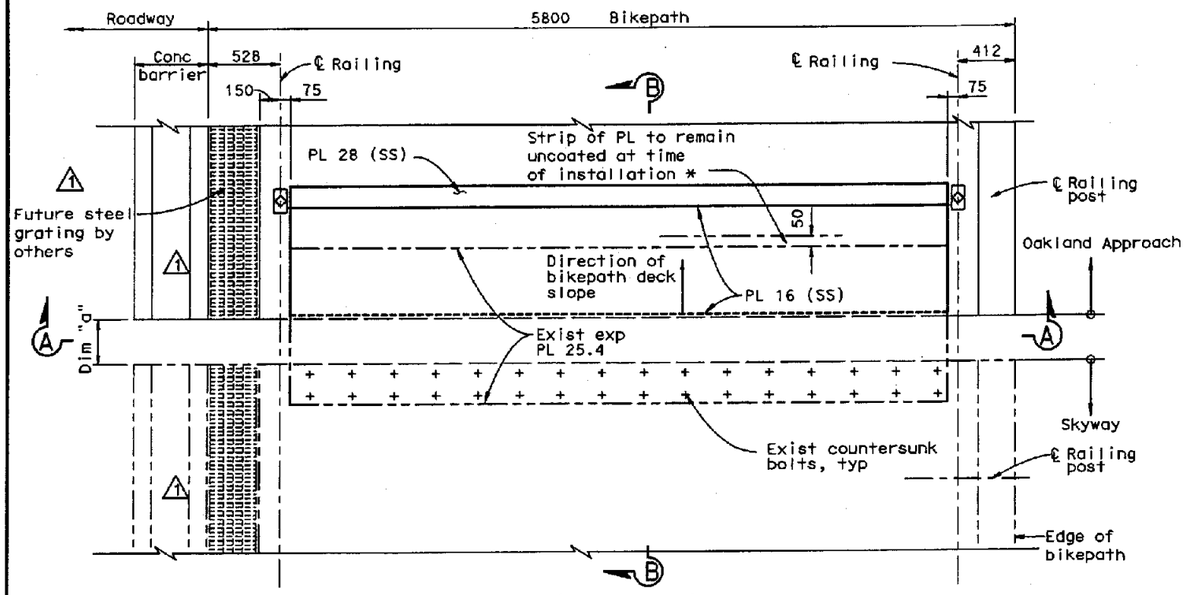

* NOTE: Exposed upper surfaces of plates shall receive a nonskid surface consisting of epoxy mixed with grit.

PLAN (HINGE E)
1:20

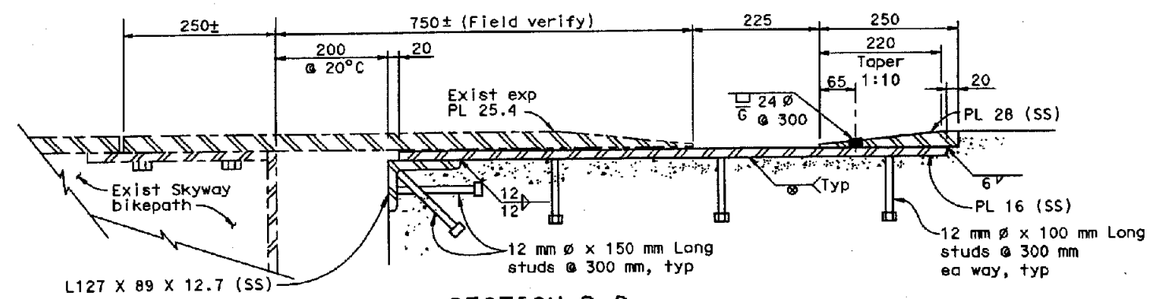

SECTION B-B
1:5

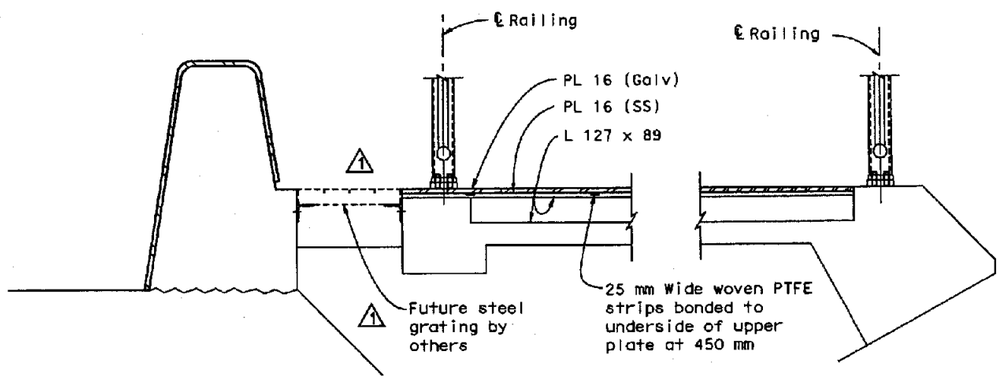

SECTION A-A
1:10

4 REVISED PER ADDENDUM No. 4 DATED MAY 24, 2007

MARK	DATE	DESCRIPTIONS	BY	CH'D
1	5/13/08	FIBERGLASS GRATING CHANGED TO STEEL, NOW BY OTHERS.	FS	JNB

REVISIONS

REGISTERED PROFESSIONAL ENGINEER JAL BIRDY No. 41547 Exp. 12-31-09 CIVIL STATE OF CALIFORNIA

STAMP IS VALID FOR REV 1 ONLY

CONTRACT CHANGE ORDER NO. 53
SHEET 3 OF 3 04-0120L4

NOTE:
The contractor shall verify all controlling field dimensions before ordering or fabricating any material or performing any work that might thereby be affected.

Note: Welding to stainless steel shall be in accordance with AWS D1.6-1999.

ALL DIMENSIONS ARE IN MILLIMETERS UNLESS OTHERWISE SHOWN

DESIGN OVERSIGHT
SAM AKIAD FRANCISCO CARPIO BERNARD CHAN HASAN EL-HATUN
8-10-06
SIGN OFF DATE
Rev. Date: 5-18-98

	BY	CHECKED
DESIGN	Chan	Jain
DETAILS	van Ryn/Zucchi/Mai	Jain
QUANTITIES	Liao	E. Nichol

ORIGINAL SCALE IN MILLIMETERS FOR REDUCED PLANS 0 10 20 30 40 50 60 70 80 90 100

PREPARED FOR THE STATE OF CALIFORNIA DEPARTMENT OF TRANSPORTATION

Jal Birdy
PROJECT ENGINEER

CU 04
EA 0120L1

BRIDGE NO. 34-0006 L/R
KILOMETER POST 1.6

DISREGARD PRINTS BEARING EARLIER REVISION DATES

REVISION DATES (PRELIMINARY STAGE ONLY) 2/14/05 4/21/05 10/20/05 10/28/05 2/24/06 5/24/06 11/27/06 1/17/06 4/27/06 7/28/06

SHEET 180 OF 224

SAN FRANCISCO OAKLAND BAY BRIDGE
EAST SPAN SEISMIC SAFETY PROJECT

OAKLAND APPROACH STRUCTURES-PHASE 1

BIKEPATH EXPANSION JOINT DETAILS

FILE => j:\civil\4141\100%\oak\CCO 051408_pdf\04-0120l1-34-006-u-ssbikeexp.dgn

USERNAME => fsamson DATE PLOTTED => 6/16/2008 TIME PLOTTED => 9:44:22 AM

STATE OF CALIFORNIA - DEPARTMENT OF TRANSPORTATION

CONTRACT CHANGE ORDER MEMORANDUM

DATE: 5/16/2008 Page 1 of 1

TO: AMER BATA / BEN GHAFGHAZI	FILE: E.A. 04 - 0120L4
FROM: BEN GHAFGHAZI	CO-RTE-PM ALA-80-1.6/2.7
	FED. NO. NO FED AID
CCO#: 53 SUPPLEMENT#: 0 Category Code: CHPT	CONTINGENCY BALANCE (incl. this change) $13,527,505.20
COST: ($12,103.00) INCREASE ☐ DECREASE ☑	HEADQUARTERS APPROVAL REQUIRED? ☐ YES ☑ NO
SUPPLEMENTAL FUNDS PROVIDED: $0.00	IS THIS REQUEST IN ACCORDANCE WITH ENVIRONMENTAL DOCUMENTS? ☑ YES ☐ NO
CCO DESCRIPTION: Delete bike path grating	**PROJECT DESCRIPTION:** Construct bridge, roadway, building and electrical system.

Original Contract Time:	Time Adj. This Change:	Previously Approved CCO Time Adjustments:	Percentage Time Adjusted: (including this change)	Total # of Unreconciled Deferred Time CCO(s): (including this change)
810 Day(s)	0 Day(s)	0 Day(s)	0 %	6

THIS CHANGE ORDER PROVIDES FOR:

Deleting the fiberglass bikepath grating on the eastbound structure per sheets 2 of 3 and 3 of 3 of the CCO.

The bikepath grating for this project specified to be fiberglass. The grating material that was installed on the Skyway Contract is galvanized steel. Caltrans' Landscape Architect for this project, Clive Endress, has requested that the bike path grating material be consistent across the bridge for visual continuity. The grating will be eliminated from this contract and added to the Oakland Touchdown 2 contract. As a safety precaution 25 mm plywood will be placed in the gap between eastbound bridge and bikepath.

There will be a credit to the State of $12,103.00, which can be returned to the contingency fund. A detailed cost analysis is on file.

This change has been discussed and concurred with Clive Endress, Landscape Architecture, Hasan El-Natur and Ade Akinsanya, Structures Design, Jal Birdy, structure designer for Moffat Nichol and Ken Terpstra, Project Manager. Maintenance concurrence is not required because the work of this CCO is temporary.

No adjustment of the contract time is warranted, as this change does not affect the controlling operation.

CONCURRED BY:		
Construction Engineer:	Ben Ghafghazi	Date 8/28/08
Bridge Engineer:	Mehran Ardakanian	Date 8/28/08
Project Engineer:	Hasan El-Natur, Structures Design	Date 5/14/08
Project Manager:	KEN TERPSTRA	Date 8/14/08
FHWA Rep.:		Date
Environmental:		Date
Other (specify):	Jal Birdy, Moffat Nichol	Date 5/14/08
Other (specify):		Date
District Prior Approval By:		Date
HQ (Issue Approve) By:		Date
Resident Engineer's Signature:		Date 8/28/08

ESTIMATE OF COST

	THIS REQUEST	TOTAL TO DATE
ITEMS	$0.00	$0.00
FORCE ACCOUNT	$0.00	$0.00
AGREED PRICE	$0.00	$0.00
ADJUSTMENT	($12,103.00)	($12,103.00)
TOTAL	($12,103.00)	($12,103.00)

FEDERAL PARTICIPATION

☐ PARTICIPATING ☐ PARTICIPATING IN PART ☑ NONE
☐ NON-PARTICIPATING (MAINTENANCE) ☐ NON-PARTICIPATING

FEDERAL SEGREGATION (if more than one Funding Source or P.I.P. type)
☑ CCO FUNDED PER CONTRACT ☑ CCO FUNDED AS FOLLOWS

FEDERAL FUNDING SOURCE	PERCENT

ADA Notice: For individuals with sensory disabilities, this document is available in alternate formats. For information call: (916) 654-6410 or TDD (916) 654-3880 or write Records and Forms Management, 1120 N Street, MS-89, Sacramento, CA 95814.

CONTRACT CHANGE ORDER

Change Requested by: Engineer

CCO 54	Suppl. No. 0	Contract No. 04 - 0120L4	Road ALA-80-1.6/2.7	FED. AID LOC.: NO FED AID

To: **M C M CONSTRUCTION INC**

You are directed to make the following changes from the plans and specifications or do the following described work not included in the plans and specifications for this contract. ***NOTE: This change order is not effective until approved by the Engineer.***

Description of work to be done, estimate of quantities and prices to be paid. (Segregate between additional work at contract price, agreed price and force account.) Unless otherwise stated, rates for rental of equipment cover only such time as equipment is actually used and no allowance will be made for idle time. This last percentage shown is the net accumulated increase or decrease from the original quantity in the Engineer's Estimate.

Revise Section 5-1.12, "Dispute Review Board," of the Special Provisions to include the informal dispute process. Attention is directed to Section 5-1.12, "Dispute Review Board," of the Special Provisions. Nothing in this CCO shall be construed as relieving the State of California (State) or the Contractor from the responsibilities specified in this section.

The following are exceptions to Section 5-1.12, "Dispute Review Board," of the Special Provisions when disputes are heard by the DRB using the informal dispute process:

1) Before using the informal dispute process, the DRB should establish all rules to be followed in preparing for and conducting these meetings in conformance with the contract, DISPUTE REVIEW BOARD AGREEMENT, and this CCO. These rules should only be implemented with the approval of the State and Contractor.

2) An informal dispute process should be convened by the DRB to hear a dispute if the State and Contractor are in agreement.

3) Recommendations with findings are presented to the State and Contractor verbally.

4) Recommendations are given the same day as the informal dispute process, unless otherwise agreed to by the State and Contractor.

5) After the recommendations have been presented the State and Contractor may ask for clarifications.

6) If the State and Contractor are able to settle their dispute with the aid of the DRB's recommendation, the parties should promptly accept and implement the settlement. If unresolved, the parties should continue to follow the procedures described in Section 5-1.12, "Dispute Review Board," of the Special Provisions.

7) The DRB is not bound by its oral recommendation in the event that a dispute that was considered in the informal dispute process is later submitted to the DRB for dispute resolution, as described in Section 5-1.12, "Dispute Review Board," of the Special Provisions.

The DISPUTE REVIEW BOARD AGREEMENT shall be amended to reflect this change. The agreement is included on pages 3 of 4, and 4 of 4 of this CCO.

CONTRACT CHANGE ORDER

Change Requested by: Engineer

CCO 54	Suppl. No. 0	Contract No. 04 - 0120L4	Road ALA-80-1.6/2.7	FED. AID LOC.: NO FED AID

Estimated Cost: Increase ☐ Decrease ☐ $0.00

By reason of this order the time of completion will be adjusted as follows: 0 days

Submitted by

Signature	Resident Engineer BEN GHAFGHAZI	Date 5/27/08

Approval Recommended by

Signature	Construction Engineer Ben Ghafghazi	Date 5/27/08

Engineer Approval by

Signature	Construction Manager Amer Bata	Date 6/12/08

We the undersigned contractor, have given careful consideration to the change proposed and agree, if this proposal is approved, that we will provide all equipment, furnish the materials, except as may otherwise be noted above, and perform all services necessary for the work above specified, and will accept as full payment therefor the prices shown above.

NOTE: If you, the contractor, do not sign acceptance of this order, your attention is directed to the requirements of the specifications as to proceeding with the ordered work and filing a written protest within the time therein specified.

Contractor Acceptance by

Signature	(Print name and title) Edmundo A Puchi Treasurer	Date 6-11-2008

DISPUTE REVIEW BOARD AGREEMENT AMENDMENT

Oakland Touch Down Contract No. 04-0120L4
(Contract Identification)

THIS DISPUTE REVIEW BOARD AGREEMENT AMENDMENT is made this 8th day of July, 2008, between the State of California, the Contractor and the Dispute Review Board (DRB).

It is hereby mutually understood and agreed upon by and between the State of California (State), the Contractor and the DRB that the DISPUTE REVIEW BOARD AGREEMENT referred to above is amended to include the informal dispute process.

INFORMAL DISPUTE PROCESS

The informal dispute process does not supersede or relieve the State, Contractor or DRB from their Stated responsibilities in the Dispute Review Board Agreement.

The informal dispute process is used for smaller or less complex cases.

The following are exceptions to the Dispute Review Board Agreement when disputes are heard by the DRB using the informal dispute process:

1. Before the initial informal dispute process, the DRB should establish all rules to be followed in preparing for and conducting these meetings in conformance with the contract, the Dispute Review Board Agreement and this Amendment. These rules should only be implemented with approval by the State and Contractor.
2. An informal dispute process should be convened by the DRB to hear a dispute, if the State and Contractor are in agreement.
3. Recommendations with findings are presented to State and Contractor verbally.
4. Recommendations are given the same day as the informal dispute process, unless otherwise agreed to by the State and the Contractor.
5. After the recommendations have been presented, the State and Contractor may ask for clarifications.
6. If the State and Contractor are able to settle their dispute with the aid of the DRB's recommendation, the State and Contractor should promptly accept and implement the settlement of the parties. If unresolved, the parties should continue to follow the procedures described in Section 5-1.12, "Dispute Review Board," of the Special Provisions.
7. The DRB will not be bound by its oral recommendation in the event that a dispute that was considered in the informal dispute process is later submitted to the DRB for dispute resolution, as described in the Dispute Review Board Agreement.

IN WITNESS WHEREOF, the parties hereto have executed this DISPUTE REVIEW BOARD AGREEMENT AMENDMENT the day and year written above.

DRB MEMBER

By: _____

Title: DRB Chair

DRB MEMBER

By: _____

Title: DRB

DRB MEMBER

By: _____

Title: DRB

CONTRACTOR

By: _____

Title: Treasurer + General Counsel

CALIFORNIA STATE DEPARTMENT OF TRANSPORTATION

By: _____

Title: Resident Engineer

STATE OF CALIFORNIA - DEPARTMENT OF TRANSPORTATION

CONTRACT CHANGE ORDER MEMORANDUM

DATE: 5/27/2008 Page 1 of 1

TO: AMER BATA / BEN GHAFGHAZI

FROM: BEN GHAFGHAZI

FILE: E.A. 04 - 0120L4
CO-RTE-PM ALA-80-1.6/2.7
FED. NO. NO FED AID

CCO#: 54 SUPPLEMENT#: 0 Category Code: ~~CXXX~~ ARZZ

CONTINGENCY BALANCE (incl. this change) **$14,279,228.70**

COST: **$0.00** INCREASE ☐ DECREASE ☐

HEADQUARTERS APPROVAL REQUIRED? ☐ YES ☑ NO

SUPPLEMENTAL FUNDS PROVIDED: **$0.00**

IS THIS REQUEST IN ACCORDANCE WITH ENVIRONMENTAL DOCUMENTS? ☑ YES ☐ NO

CCO DESCRIPTION:
Informal DRB process

PROJECT DESCRIPTION:
Construct bridge, roadway, building and electrical system.

Original Contract Time:	Time Adj. This Change:	Previously Approved CCO Time Adjustments:	Percentage Time Adjusted: (including this change)	Total # of Unreconciled Deferred Time CCO(s): (including this change)
810 Day(s)	0 Day(s)	0 Day(s)	0 %	5

THIS CHANGE ORDER PROVIDES FOR:

The Dispute Review Board (DRB) to hear disputes between the state and contractor in a less formal manner than that prescribed in Section 5-1.12, "Dispute Review Board," of the Special Provisions. Construction Policy Bulletin (CPB) 06-2, dated 03/20/2006, was issued by the Division of Construction allowing the informal dispute process to be used by the DRB. The informal process allows the DRB to hear less complicated issues in a timelier manner, while reducing the administrative effort of all parties involved.

This CCO provides no adjustment in compensation since both the State and Contractor will save money equally on administrative and DRB costs.

Design and Maintenance concurrence is not necessary since this CCO is for administrative purposes only.

No adjustment of contract time is warranted since this change does not affect the controlling operation.

CONCURRED BY:

Construction Engineer:	Ben Ghafghazi	Date 5/27/08
Bridge Engineer:		Date
Project Engineer:		Date
Project Manager:		Date
FHWA Rep.:		Date
Environmental:		Date
Other (specify):		Date
Other (specify):		Date
District Prior Approval By:		Date
HQ (Issue Approve) By:		Date
Resident Engineer's Signature:		Date 5/27/08

ESTIMATE OF COST

	THIS REQUEST	TOTAL TO DATE
ITEMS	$0.00	$0.00
FORCE ACCOUNT	$0.00	$0.00
AGREED PRICE	$0.00	$0.00
ADJUSTMENT	$0.00	$0.00
TOTAL	$0.00	$0.00

FEDERAL PARTICIPATION

☐ PARTICIPATING ☐ PARTICIPATING IN PART ☑ NONE
☐ NON-PARTICIPATING (MAINTENANCE) ☐ NON-PARTICIPATING

FEDERAL SEGREGATION (if more than one Funding Source or P.I.P. type)
☑ CCO FUNDED PER CONTRACT ☐ CCO FUNDED AS FOLLOWS

FEDERAL FUNDING SOURCE	PERCENT

ADA Notice: For individuals with sensory disabilities, this document is available in alternate formats. For information call: (916) 654-6410 or TDD (916) 654-3880 or write Records and Forms Management, 1120 N Street, MS-89, Sacramento, CA 95814.

STATE OF CALIFORNIA - DEPARTMENT OF TRANSPORTATION

CONTRACT CHANGE ORDER

Change Requested by: Engineer

CCO 55	Suppl. No. 0	Contract No. 04 - 0120L4	Road ALA-80-1.6/2.7	FED. AID LOC.: NO FED AID

To: **M C M CONSTRUCTION INC**

You are directed to make the following changes from the plans and specifications or do the following described work not included in the plans and specifications for this contract. ***NOTE: This change order is not effective until approved by the Engineer.***

Description of work to be done, estimate of quantities and prices to be paid. (Segregate between additional work at contract price, agreed price and force account.) Unless otherwise stated, rates for rental of equipment cover only such time as equipment is actually used and no allowance will be made for idle time. This last percentage shown is the net accumulated increase or decrease from the original quantity in the Engineer's Estimate.

Adjustment of Compensation at Lump Sum:

Compensate the Contractor for the cost for constructing straddle bents on temporary trestle to span the 250 mm PG&E high pressure gas line shown on Sheet U-2 of the contract plans. This CCO resolves all issues related to NOPC #1 dated November 30, 2007.

Adjustment of Compensation at Lump Sum $132,121.48

Estimated Cost: Increase ☑ **Decrease** ☐ **$132,121.48**

By reason of this order the time of completion will be adjusted as follows: 0 days

Submitted by

Signature	Resident Engineer BEN GHAFGHAZI	Date 11/12/08

Approval Recommended by

Signature	Construction Engineer Ben Ghafghazi	Date 11/12/08

Engineer Approval by

Signature	Construction Manager Amer Bata	Date 12/3/08

We the undersigned contractor, have given careful consideration to the change proposed and agree, if this proposal is approved, that we will provide all equipment, furnish the materials, except as may otherwise be noted above, and perform all services necessary for the work above specified, and will accept as full payment therefor the prices shown above.

NOTE: If you, the contractor, do not sign acceptance of this order, your attention is directed to the requirements of the specifications as to proceeding with the ordered work and filing a written protest within the time therein specified.

Contractor Acceptance by

Signature	(Print name and title) JAMES A. CARTER, PRESIDENT	Date 11/21/08

STATE OF CALIFORNIA • DEPARTMENT OF TRANSPORTATION

NOTICE OF POTENTIAL CLAIM

CEM-6201 (REV 3/2001)

FOR STATE USE ONLY	
Received by (For resident engineer)	DATE

TO	CONTRACT NUMBER	DATE
Mr. Ben Ghafghazi (resident engineer)	04-0120L4	11/30/07

This is a Notice of Potential Claim for additional compensation under the provisions of Section 9-1.04 of the *Standard Specifications*. The act of the engineer, or his/her failure to act, or the event, thing, occurrence, or other cause giving rise to the potential claim occurred on DATE

The particular circumstances of this potential claim are described in detail as follows:

Please reference the following letters: MCM-LTR-000221, 227, 229, and 241; all related to the PG&E High Pressure Gas Line issue. As you are aware, PG&E would not locate their line as requested by MCM. The only mention of clearance in any of the contract document are related to the duck bank where a 610mm clearance is required. No mention of any additional setback from the pipe is made. Upon investigation and requests for additional information from PG&E as to the exact location of the pipe, MCM received an as-built drawing that was clarified to only be accurate within 2% of the vertical dimension. Due to the inability of PG&E to verify the exact as-built location of the pipe and an increased horizontal clearance was imposed, redesign of the approved trestle plan was necessary to include straddle bents. These straddle bents required a significant amount of material, time and labor.

The reasons for which I believe additional compensation may be due are:

A significant amount of time, materials, labor and exploratory diving operations were necessary to resolve this issue. These costs could have been avoided had the contract drawings reflected accurate information regarding the High Pressure Gas Line.

The nature of the costs involved and the amount of the potential claim are described as follows:
(If accurate cost figures are not available, provide an estimate, or describe the types of expenses involved.)

Materials, Labor, Time and costs related to investigation and redesign are estimated at $200,000.

The undersigned originator (Contractor or Subcontractor as appropriate) certifies that the above statements are made in full cognizance of the California False Claims Act, Government Code sections 12650-12655. The undersigned further understands and agrees that this potential claim to be further considered unless resolved, must be restated as a claim in response to the states proposed final estimate in accordance with Section 9-1.07B of the *Standard Specifications*.

SUBCONTRACTOR or CONTRACTOR
(Circle one)

(Authorized Representative)

For subcontractor notice of potential claim

This notice of potential claim is acknowledged and forwarded by

PRIME CONTRACTOR

(Authorized Representative)

ADA Notice For individuals with sensory disabilities, this document is available in alternate formats. For information call (916) 654-6410 or TDD (916) 654-3880 or write Records and Forms Management, 1120 N Street, MS-89, Sacramento, CA 95814.

STATE OF CALIFORNIA - DEPARTMENT OF TRANSPORTATION

CONTRACT CHANGE ORDER MEMORANDUM

DATE: 5/27/2008 Page 1 of 1

TO: AMER BATA / BEN GHAFGHAZI	FILE: E.A. 04 - 0120L4
FROM: BEN GHAFGHAZI	CO-RTE-PM ALA-80-1.6/2.7
	FED. NO. NO FED AID
CCO#: 55 SUPPLEMENT#: 0 Category Code: EHBD	CONTINGENCY BALANCE (incl. this change) $13,454,111.20
COST: $132,121.48 INCREASE ☑ DECREASE ☐	HEADQUARTERS APPROVAL REQUIRED? ☐ YES ☑ NO
SUPPLEMENTAL FUNDS PROVIDED: $0.00	IS THIS REQUEST IN ACCORDANCE WITH ENVIRONMENTAL DOCUMENTS? ☑ YES ☐ NO
CCO DESCRIPTION: Resolve NOPC #1 PG&E gas line	**PROJECT DESCRIPTION:** Construct bridge, roadway, building and electrical system.

Original Contract Time:	Time Adj. This Change:	Previously Approved CCO Time Adjustments:	Percentage Time Adjusted: (including this change)	Total # of Unreconciled Deferred Time CCO(s): (including this change)
810 Day(s)	0 Day(s)	2 Day(s)	0 %	6

THIS CHANGE ORDER PROVIDES FOR:

Compensation to the Contractor for the cost for constructing straddle bents on the temporary trestle that were installed to span the 250 mm PG&E high pressure gas line shown on Sheet U-2 of the contract plans.

This change is necessary to resolve Notice of Potential Claim (NOPC) #1 (copy attached). The existing 250 mm high pressure gas line is shown on Sheet U-2 of the contract plans. There are no work restrictions in the plans or Special Provisions for clearance around the line. PG&E requires 1.5 m clearance around the line. This requirement has caused the Contractor to redesign the temporary trestle at the gas line crossing. This redesign added straddle bents to span the gas line. This CCO covers the cost of providing and installing the straddle bents.

This work will be paid as Adjustment of Compensation at Lump Sum of $132,121.48, which can be financed from the contingency fund. A detailed cost analysis is on file.

This change was discussed and concurred with Ken Terpstra, Project Manager, and Mike Forner, Principal Construction Engineer. Design and Maintenance concurrence is not necessary since this CCO is for administrative purposes only.

No adjustment of contract time is warranted since this change does not affect the controlling operation.

CONCURRED BY:

Construction Engineer:	Ben Ghafghazi	Date 11/12/07
Bridge Engineer:		Date
Project Engineer:		Date
Project Manager:	Ken Terprstra	Date 3/12/08
FHWA Rep.:		Date
Environmental:		Date
Other (specify):		Date
Other (specify):		Date
District Prior Approval By:	Mike Forner, Principal TE	Date 3/12/08
HQ (Issue Approve) By:		Date
Resident Engineer's Signature:		Date 11/12/08

ESTIMATE OF COST

	THIS REQUEST	TOTAL TO DATE
ITEMS	$0.00	$0.00
FORCE ACCOUNT	$0.00	$0.00
AGREED PRICE	$0.00	$0.00
ADJUSTMENT	$132,121.48	$132,121.48
TOTAL	$132,121.48	$132,121.48

FEDERAL PARTICIPATION

☐ PARTICIPATING ☐ PARTICIPATING IN PART ☑ NONE
☐ NON-PARTICIPATING (MAINTENANCE) ☐ NON-PARTICIPATING

FEDERAL SEGREGATION (if more than one Funding Source or P.I.P. type)
☑ CCO FUNDED PER CONTRACT ☐ CCO FUNDED AS FOLLOWS

FEDERAL FUNDING SOURCE	PERCENT

ADA Notice: For individuals with sensory disabilities, this document is available in alternate formats. For information call: (916) 654-6410 or TDD (916) 654-3880 or write Records and Forms Management, 1120 N Street, MS-89, Sacramento, CA 95814.

STATE OF CALIFORNIA - DEPARTMENT OF TRANSPORTATION

CONTRACT CHANGE ORDER

Change Requested by: Engineer

CCO 56	Suppl. No. 0	Contract No. 04 - 0120L4	Road ALA-80-1.6/2.7	FED. AID LOC.: NO FED AID

78 M C M CONSTRUCTION INC

You are directed to make the following changes from the plans and specifications or do the following described work not included in the plans and specifications for this contract. ***NOTE: This change order is not effective until approved by the Engineer.***

Description of work to be done, estimate of quantities and prices to be paid. (Segregate between additional work at contract price, agreed price and force account.) Unless otherwise stated, rates for rental of equipment cover only such time as equipment is actually used and no allowance will be made for idle time. This last percentage shown is the net accumulated increase or decrease from the original quantity in the Engineer's Estimate.

Extra Work at Force Account:

Provide labor, equipment, and materials as necessary to locate the offshore portion of the existing 250 mm PG&E high pressure gas line shown on Sheet U-2 of the contract plans in accordance with Section 8-1.10, "Utility and Non-highway Facilities," of the Standard Specifications.

Estimated cost of Extra Work at Force Account $35,000.00

Estimated Cost: Increase ☑ Decrease ☐ $35,000.00

By reason of this order the time of completion will be adjusted as follows: 0 days

Submitted by

Signature	Resident Engineer BEN GHAFGHAZI	Date 5/29/08

Approval Recommended by

Signature	Construction Engineer Ben Ghafghazi	Date 5/29/08

Engineer Approval by

Signature	Construction Engineer Ben Ghafghazi	Date 8/20/08

We the undersigned contractor, have given careful consideration to the change proposed and agree, if this proposal is approved, that we will provide all equipment, furnish the materials, except as may otherwise be noted above, and perform all services necessary for the work above specified, and will accept as full payment therefor the prices shown above.

NOTE: If you, the contractor, do not sign acceptance of this order, your attention is directed to the requirements of the specifications as to proceeding with the ordered work and filing a written protest within the time therein specified.

Contractor Acceptance by

Signature	(Print name and title) EDMUNDO A. PUCHI, TREASURER	Date 8/18/08

STATE OF CALIFORNIA - DEPARTMENT OF TRANSPORTATION

CONTRACT CHANGE ORDER MEMORANDUM

DATE: 5/28/2008 Page 1 of 1

TO: AMER BATA / BEN GHAFGHAZI

FROM: BEN GHAFGHAZI

FILE: E.A. 04 - 0120L4
CO-RTE-PM ALA-80-1.6/2.7
FED. NO. NO FED AID

CCO#: 56 | SUPPLEMENT#: 0 | Category Code: ~~CLCA~~ AHZZ

CONTINGENCY BALANCE (incl. this change) $14,069,228.70

COST: $35,000.00 INCREASE ☑ DECREASE ☐

HEADQUARTERS APPROVAL REQUIRED? ☐ YES ☑ NO

SUPPLEMENTAL FUNDS PROVIDED: $0.00

IS THIS REQUEST IN ACCORDANCE WITH ENVIRONMENTAL DOCUMENTS? ☑ YES ☐ NO

CCO DESCRIPTION:
Locate PG&E gas line

PROJECT DESCRIPTION:
Construct bridge, roadway, building and electrical system.

Original Contract Time:	Time Adj. This Change:	Previously Approved CCO Time Adjustments:	Percentage Time Adjusted: (including this change)	Total # of Unreconciled Deferred Time CCO(s): (including this change)
810 Day(s)	0 Day(s)	0 Day(s)	0 %	5

THIS CHANGE ORDER PROVIDES FOR:

Providing labor, equipment, and materials as necessary to locate the offshore portion of the existing 250 mm PG&E high pressure gas line shown on Sheet U-2 of the contract plans in accordance with Section 8-1.10, "Utility and Non-highway Facilities," of the Standard Specifications.

This change is necessary because of the highly sensitive nature of working near the gas line. PG&E requires work to be a minimum of 1.5 m clear of the gas line. To maintain this clearance the precise location of the line must be determined. PG&E provided as-built coordinates, but was not able to provide any type of markings for the offshore portion of the line. Exploration of the line on shore did not agree fully with the as-builts. This created a concern as to the accuracy of the coordinates. As a safety precaution the State directed MCM to have their subcontractor, Underwater Resources International (URI), verify the location of the gas line by probing, sonic sounding and other methods.

This work will be paid as extra work at force account for an estimated cost of $35,000, which can be financed from the contingency fund.

Design and Maintenance concurrence is not necessary since this CCO is for administrative purposes only.

No adjustment of contract time is warranted since this change does not affect the controlling operation.

CONCURRED BY:

Construction Engineer:	Ben Ghafghazi	Date 5/29/08
Bridge Engineer:		Date
Project Engineer:		Date
Project Manager:		Date
FHWA Rep.:		Date
Environmental:		Date
Other (specify):		Date
Other (specify):		Date
District Prior Approval By:		Date
HQ (Issue Approve) By:		Date
Resident Engineer's Signature:		Date 5/29/08

ESTIMATE OF COST

	THIS REQUEST	TOTAL TO DATE
ITEMS	$0.00	$0.00
FORCE ACCOUNT	$35,000.00	$35,000.00
AGREED PRICE	$0.00	$0.00
ADJUSTMENT	$0.00	$0.00
TOTAL	$35,000.00	$35,000.00

FEDERAL PARTICIPATION

☐ PARTICIPATING ☐ PARTICIPATING IN PART ☑ NONE
☐ NON-PARTICIPATING (MAINTENANCE) ☐ NON-PARTICIPATING

FEDERAL SEGREGATION (if more than one Funding Source or P.I.P. type)
☑ CCO FUNDED PER CONTRACT ☐ CCO FUNDED AS FOLLOWS

FEDERAL FUNDING SOURCE	PERCENT

ADA Notice: For individuals with sensory disabilities, this document is available in alternate formats. For information call: (916) 654-6410 or TDD (916) 654-3880 or write Records and Forms Management, 1120 N Street, MS-89, Sacramento, CA 95814.

CONTRACT CHANGE ORDER

Change Requested by: Engineer

CCO 57	Suppl. No. 0	Contract No. 04 - 0120L4	Road ALA-80-1.6/2.7	FED. AID LOC.: NO FED AID

M C M CONSTRUCTION INC

You are directed to make the following changes from the plans and specifications or do the following described work not included in the plans and specifications for this contract. ***NOTE: This change order is not effective until approved by the Engineer.***

Description of work to be done, estimate of quantities and prices to be paid. (Segregate between additional work at contract price, agreed price and force account.) Unless otherwise stated, rates for rental of equipment cover only such time as equipment is actually used and no allowance will be made for idle time. This last percentage shown is the net accumulated increase or decrease from the original quantity in the Engineer's Estimate.

Construct service platforms in accordance with the revised specifications and plans on sheets 2 through 25 of this CCO.

There shall be no cost for this CCO.

Estimated Cost: **Increase** ☐ **Decrease** ☐ **$0.00**

By reason of this order the time of completion will be adjusted as follows: 0 days

Submitted by

Signature	Resident Engineer BEN GHAFGHAZI	Date 6/20/07

Approval Recommended by

Signature	Construction Manager Amer Bata	Date 6/26/08

Engineer Approval by

Signature	Construction Manager Amer Bata	Date 12/29/08

We the undersigned contractor, have given careful consideration to the change proposed and agree, if this proposal is approved, that we will provide all equipment, furnish the materials, except as may otherwise be noted above, and perform all services necessary for the work above specified, and will accept as full payment therefor the prices shown above.

NOTE: If you, the contractor, do not sign acceptance of this order, your attention is directed to the requirements of the specifications as to proceeding with the ordered work and filing a written protest within the time therein specified.

Contractor Acceptance by

Signature	(Print name and title) EDMUNDO A. PUCHI, TREASURER	Date 12/18/08

10-1.69 STEEL STRUCTURES

Construction of steel structures shall conform to the provisions in Section 8, "Steel Structures," of the Standard Specifications and these special provisions.

GENERAL

Attention is directed to "Welding" in Section 8, "Materials," of these special provisions.

The following substitutions of high-strength steel fasteners shall be made:

METRIC SIZE SHOWN ON THE PLANS	SIZE TO BE SUBSTITUTED
ASTM Designation: A 325M (Nominal bolt diameter (mm))	ASTM Designation: A 325 (Nominal bolt diameter (inch))
13, 12.70, or M12	1/2
16, 15.88, or M16	5/8
19, 19.05, or M20	3/4
22, 22.22, or M22	7/8
24, 25, 25.40, or M24	1
29, 28.58, or M27	1 1/8
32, 31.75, or M30	1 1/4
38, 38.10, or M36	1 1/2

MATERIALS

Structural steel rolled shapes used in overhead sign structures shall conform to the Charpy V-notch impact values specified for steel plate in Section 55-2, "Materials," of the Standard Specifications.

High-strength fastener assemblies and other bolts attached to structural steel with nuts and washers shall be zinc-coated. When direct tension indicators are used in these assemblies, the direct tension indicator and all components of the fastener assembly shall be zinc-coated by the mechanical deposition process.

ROTATIONAL CAPACITY TESTING PRIOR TO SHIPMENT TO JOB SITE

Rotational capacity tests shall be performed on all lots of high-strength fastener assemblies prior to shipment of these lots to the project site. Zinc-coated assemblies shall be tested after all fabrication, coating, and lubrication of components has been completed. One hardened washer shall be used under each nut for the tests.

Rotational capacity testing will not be required for embedded high strength bolts, embedded reinforcing bars hanger supports and embedded A307 bolts used in service platforms.

The requirements of this section do not apply to high-strength cap screws or high-strength bolts used for slip base plates.

Each combination of bolt production lot, nut lot, and washer lot shall be tested as an assembly.

A rotational capacity lot number shall be assigned to each combination of lots tested. Each shipping unit of fastener assemblies shall be plainly marked with the rotational capacity lot number.

Two fastener assemblies from each rotational capacity lot shall be tested.

The following equipment, procedure, and acceptance criteria shall be used to perform rotational capacity tests on and determine acceptance of long bolts. Fasteners are considered to

be long bolts when full nut thread engagement can be achieved when installed in a bolt tension measuring device:

A. Long Bolt Test Equipment:

1. Calibrated bolt tension measuring device with adequate tension capacity for the bolts being tested.
2. Calibrated dial or digital torque wrench. Other suitable tools will be required for performing Steps 7 and 8 of the Long Bolt Test Procedure. A torque multiplier may be required for large diameter bolts.
3. Spacer washers or bushings. When spacer washers or bushings are required, they shall have the same inside diameter and equal or larger outside diameter as the appropriate hardened washers conforming to the requirements in ASTM Designation: F436.
4. Steel beam or member, such as a girder flange or cross frame, to which the bolt tension measuring device will be attached. The device shall be accessible from the ground.

B Long Bolt Test Procedure:

1. Measure the bolt length. The bolt length is defined as the distance from the end of the threaded portion of the shank to the underside of the bolt head.
2. Install the nut on the bolt so that 3 to 5 full threads of the bolt are located between the bearing face of the nut and the underside of the bolt head. Measure and record the thread stickout of the bolt. Thread stickout is determined by measuring the distance from the outer face of the nut to the end of the threaded portion of the shank.
3. Insert the bolt into the bolt tension measuring device and install the required number of washers, and additional spacers as needed, directly beneath the nut to produce the thread stickout measured in Step 2 of this procedure.
4. Tighten the nut using a hand wrench to a snug-tight condition. The snug tension shall not be less than the Table A value but may exceed the Table A value by a maximum of 2 kips.

Table A

High-Strength Fastener Assembly Tension Values to Approximate Snug-Tight Condition	
Bolt Diameter (inches)	Snug Tension (kips)
1/2	1
5/8	2
3/4	3
7/8	4
1	5
1 1/8	6
1 1/4	7
1 3/8	9
1 1/2	10

REGISTERED PROFESSIONAL ENGINEER
GREGORY BENKOVICH
No. C 040518
Exp. 3/31/09
CIVIL
STATE OF CALIFORNIA

5. Match-mark the assembly by placing a heavy reference start line on the face plate of the bolt tension measuring device which aligns with 1) a mark placed on one corner of the nut, and 2) a radial line placed across the flat on the end of the bolt, or on the

exposed portions of the threads of tension control bolts. Place an additional mark on the outside of the socket that overlays the mark on the nut corner such that this mark will be visible while turning the nut. Make an additional mark on the face plate, either 2/3 of a turn, one turn, or 1 1/3 turn clockwise from the heavy reference start line, depending on the bolt length being tested as shown in Table B.

Table B

Required Nut Rotation for Rotational Capacity Tests[a,b]	
Bolt Length (measured in Step 1)	Required Rotation (turn)
4 bolt diameters or less	2/3
Greater than 4 bolt diameters but no more than 8 bolt diameters	1
Greater than 8 bolt diameters, but no more than 12 bolt diameters[c]	1 1/3
(a) Nut rotation is relative to bolt, regardless of the element (nut or bolt) being turned. For bolts installed by 1/2 turn and less, the tolerance shall be plus or minus 30 degrees; for bolts installed by 2/3 turn and more, the tolerance shall be plus or minus 45 degrees. (b) Applicable only to connections in which all material within grip of the bolt is steel. (c) When bolt length exceeds 12 diameters, the required rotation shall be determined by actual tests in a suitable tension device simulating the actual conditions.	

REGISTERED PROFESSIONAL ENGINEER
GREGORY BENKOVICH
No. C 040518
Exp. 3/31/09
CIVIL
STATE OF CALIFORNIA

6. Turn the nut to achieve the applicable minimum bolt tension value listed in Table C. After reaching this tension, record the moving torque, in foot-pounds, required to turn the nut, and also record the corresponding bolt tension value in pounds. Torque shall be measured with the nut in motion. Calculate the value, T (in ft-lbs), where T=[(the measured tension in pounds) x (the bolt diameter in inches) / 48 in/ft].

Table C

Minimum Tension Values for High-Strength Fastener Assemblies	
Bolt Diameter (inches)	Minimum Tension (kips)
1/2	12
5/8	19
3/4	28
7/8	39
1	51
1 1/8	56
1 1/4	71
1 3/8	85
1 1/2	103

CONTRACT NO. 04-012024

CCO # 57

Sheet 4 of 25

7. Turn the nut further to increase bolt tension until the rotation listed in Table B is reached. The rotation is measured from the heavy reference line made on the face plate after the bolt was snug-tight. Record this bolt tension.
8. Loosen and remove the nut and examine the threads on both the nut and bolt.

C. Long Bolt Acceptance Criteria:

1. An assembly shall pass the following requirements to be acceptable: 1) the measured moving torque (Step 6) shall be less than or equal to the calculated value, T (Step 6), 2) the bolt tension measured in Step 7 shall be greater than or equal to the applicable turn test tension value listed in Table D, 3) the nut shall be able to be removed from the bolt without signs of thread stripping or galling after the required rotation in Step 7 has been achieved, 4) the bolt does not shear from torsion or fail during the test, and 5) the assembly does not seize before the final rotation in Step 7 is reached. Elongation of the bolt in the threaded region between the bearing face of the nut and the underside of the bolt head is expected and will not be considered a failure. Both fastener assemblies tested from one rotational capacity lot shall pass for the rotational capacity lot to be acceptable.

Table D

Turn Test Tension Values	
Bolt Diameter (inches)	Turn Test Tension (kips)
1/2	14
5/8	22
3/4	32
7/8	45
1	59
1 1/8	64
1 1/4	82
1 3/8	98
1 1/2	118

REGISTERED PROFESSIONAL ENGINEER
GREGORY BENKOVICH
No. C 040518
Exp. 3/31/09
CIVIL
STATE OF CALIFORNIA

The following equipment, procedure, and acceptance criteria shall be used to perform rotational capacity tests on and determine acceptance of short bolts. Fasteners are considered to be short bolts when full nut thread engagement cannot be achieved when installed in a bolt tension measuring device:

A. Short Bolt Test Equipment:

1. Calibrated dial or digital torque wrench. Other suitable tools will be required for performing Steps 7 and 8 of the Short Bolt Test Procedure. A torque multiplier may be required for large diameter bolts.
2. Spud wrench or equivalent.
3. Spacer washers or bushings. When spacer washers or bushings are required, they shall have the same inside diameter and equal or larger outside diameter as the appropriate hardened washers conforming to the requirements in ASTM Designation: F436.
4. Steel plate or girder with a hole to install bolt. The hole size shall be 1.6 mm greater than the nominal diameter of the bolt to be tested. The grip length, including any

plates, washers, and additional spacers as needed, shall provide the proper number of threads within the grip, as required in Step 2 of the Short Bolt Test Procedure.

B. Short Bolt Test Procedure:

1. Measure the bolt length. The bolt length is defined as the distance from the end of the threaded portion of the shank to the underside of the bolt head.
2. Install the nut on the bolt so that 3 to 5 full threads of the bolt are located between the bearing face of the nut and the underside of the bolt head. Measure and record the thread stickout of the bolt. Thread stickout is determined by measuring the distance from the outer face of the nut to the end of the threaded portion of the shank.
3. Install the bolt into a hole on the plate or girder and install the required number of washers and additional spacers as needed between the bearing face of the nut and the underside of the bolt head to produce the thread stickout measured in Step 2 of this procedure.
4. Tighten the nut using a hand wrench to a snug-tight condition. The snug condition shall be the full manual effort applied to the end of a 305 mm long wrench. This applied torque shall not exceed 20 percent of the maximum allowable torque in Table E.

Table E

Maximum Allowable Torque for High-Strength Fastener Assemblies	
Bolt Diameter (inches)	Torque (ft-lbs)
1/2	145
5/8	285
3/4	500
7/8	820
1	1220
1 1/8	1500
1 1/4	2130
1 3/8	2800
1 1/2	3700

REGISTERED PROFESSIONAL ENGINEER
GREGORY BENKOVICH
No. C 040518
Exp. 3/31/09
CIVIL
STATE OF CALIFORNIA

5. Match-mark the assembly by placing a heavy reference start line on the steel plate or girder which aligns with 1) a mark placed on one corner of the nut and 2) a radial line placed across the flat on the end of the bolt or on the exposed portions of the threads of tension control bolts. Place an additional mark on the outside of the socket that overlays the mark on the nut corner such that this mark will be visible while turning the nut. Make 2 additional small marks on the steel plate or girder, one 1/3 of a turn and one 2/3 of a turn clockwise from the heavy reference start line on the steel plate or girder.
6. Using the torque wrench, tighten the nut to the rotation value listed in Table F. The rotation is measured from the heavy reference line described in Step 5 made after the bolt was snug-tight. A second wrench shall be used to prevent rotation of the bolt head during tightening. Measure and record the moving torque after this rotation has been reached. The torque shall be measured with the nut in motion.

Table F

Nut Rotation Required for Turn-of-Nut Installation (a,b)	
Bolt Length (measured in Step 1)	Required Rotation (turn)
4 bolt diameters or less	1/3
(a) Nut rotation is relative to bolt, regardless of the element (nut or bolt) being turned. For bolts installed by 1/2 turn and less, the tolerance shall be plus or minus 30 degrees. (b) Applicable only to connections in which all material within grip of the bolt is steel.	

REGISTERED PROFESSIONAL ENGINEER GREGORY BENKOVICH No. C 040518 Exp. 3/31/09 CIVIL STATE OF CALIFORNIA

7. Tighten the nut further to the 2/3-turn mark as indicated in Table G. The rotation is measured from the heavy reference start line made on the plate or girder when the bolt was snug-tight. Verify that the radial line on the bolt end or on the exposed portions of the threads of tension control bolts is still in alignment with the start line.

Table G

Required Nut Rotation for Rotational Capacity Test	
Bolt Length (measured in Step 1)	Required Rotation (turn)
4 bolt diameters or less	2/3

8. Loosen and remove the nut and examine the threads on both the nut and bolt.

C. Short Bolt Acceptance Criteria:

1. An assembly shall pass the following requirements to be acceptable: 1) the measured moving torque from Step 6 shall be less than or equal to the maximum allowable torque from Table E, 2) the nut shall be able to be removed from the bolt without signs of thread stripping or galling after the required rotation in Step 7 has been achieved, 3) the bolt does not shear from torsion or fail during the test, and 4) the assembly shall not seize before the final rotation in Step 7 is reached. Elongation of the bolt in the threaded region between the bearing face of the nut and the underside of the bolt head will not be considered a failure. Both fastener assemblies tested from one rotational capacity lot shall pass for the rotational capacity lot to be acceptable.

INSTALLATION TENSION TESTING AND ROTATIONAL CAPACITY TESTING AFTER ARRIVAL ON THE JOB SITE

Installation tension tests and rotational capacity tests on high-strength fastener assemblies shall be performed by the Contractor prior to acceptance or installation and after arrival of the fastener assemblies on the project site. Installation tension tests and rotational capacity tests shall be performed at the job-site, in the presence of the Engineer, on each rotational capacity lot of fastener assemblies.

The requirements of this section do not apply to high-strength cap screws or high-strength bolts used for slip base plates.

Neither installation tension tests nor rotational capacity tests will be required for embedded high strength bolts, embedded reinforcing bars hanger supports and embedded A307 bolts used in service platforms.

Installation tension tests shall be performed on 3 representative fastener assemblies in conformance with the provisions in Section 8, "Installation," of the RCSC Specification. For short bolts, Section 8.2, "Pretensioned Joints," of the RCSC Specification shall be replaced by the "Pre-Installation Testing Procedures," of the "Structural Bolting Handbook," published by the Steel Structures Technology Center, Incorporated.

The rotational capacity tests shall be performed in conformance with the requirements for rotational capacity tests in "Rotational Capacity Testing Prior to Shipment to Job Site" of these special provisions.

At the Contractor's expense, additional installation tension tests, tests required to determine job inspecting torque, and rotational capacity tests shall be performed by the Contractor on each rotational capacity lot, in the presence of the Engineer, if 1) any fastener is not used within 3 months after arrival on the jobsite, 2) fasteners are improperly handled, stored, or subjected to inclement weather prior to final tightening, 3) significant changes are noted in original surface condition of threads, washers, or nut lubricant, or 4) the Contractor's required inspection is not performed within 48 hours after all fasteners in a joint have been tensioned.

Failure of a job-site installation tension test or a rotational capacity test will be cause for rejection of unused fasteners that are part of the rotational capacity lot.

When direct tension indicators are used, installation verification tests shall be performed in conformance with Appendix Section X1.4 of ASTM Designation: F959, except that bolts shall be initially tensioned to a value 5 percent greater than the minimum required bolt tension.

SURFACE PREPARATION

For all bolted connections, the contact surfaces and inside surfaces of bolt holes shall be cleaned and coated before assembly in conformance with the provisions for cleaning and painting structural steel of these special provisions.

SEALING

The perimeter around all direct tension indicator gaps shall be completely sealed with non-silicone type sealing compound conforming to the provisions in Federal Specification TT-S-230, Type II. The sealant shall be gray in color and have a minimum thickness of 1.3 mm. If painting is required, the sealing compound shall be applied prior to painting.

When zinc-coated tension control bolts are used, the sheared end of each fastener shall be completely sealed with non-silicone type sealing compound conforming to the provisions in Federal Specification TT-S-230, Type II. The sealant shall be gray in color and shall have a minimum thickness of 1.3 mm. The sealant shall be applied to a clean sheared surface on the same day that the splined end is sheared off.

WELDING

Table 2.2 of AWS D1.5 is superseded by the following table:

REGISTERED PROFESSIONAL ENGINEER
GREGORY BENKOVICH
No. C 040518
Exp. 3/31/09
CIVIL
STATE OF CALIFORNIA

Base Metal Thickness of the Thicker Part Joined, mm	Minimum Effective Partial Joint Penetration Groove Weld Size, * mm
Over 6 to 13 inclusive	5
Over 13 to 19 inclusive	6
Over 19 to 38 inclusive	8
Over 38 to 57 inclusive	10
Over 57 to 150 inclusive	13
Over 150	16

* Except the weld size need not exceed the thickness of the thinner part

Dimensional details and workmanship for welded joints in tubular and pipe connections shall conform to the provisions in Part A, "Common Requirements of Nontubular and Tubular Connections," and Part D, "Specific Requirements for Tubular Connections," in Section 2 of AWS D1.1.

The requirement of conformance with AWS D1.5 shall not apply to work conforming to Section 56-1, "Overhead Sign Structures," or Section 86-2.04, "Standards, Steel Pedestals and Posts," of the Standard Specifications.

REGISTERED PROFESSIONAL ENGINEER
GREGORY BENKOVICH
No. C 040518
Exp. 3/31/09
CIVIL
STATE OF CALIFORNIA

CONTRACT NO. 04-012024

CCO # 57

Sheet 9 of 25

10-1.71 SERVICE PLATFORM

Service platform shall consist of furnishing, fabricating, finishing and erecting service platforms and all work required to complete the service platform as shown on the plans, as specified in the Standard Specifications and these special provisions, and as directed by the Engineer.

Service platforms shall include the following:

REGISTERED PROFESSIONAL ENGINEER
GREGORY BENKOVICH
No. C 040518
Exp. 3/31/09
CIVIL
STATE OF CALIFORNIA

1. Structural steel
3. Reinforced concrete
4. Checkered plates for floor access opening
5. Stairway
6. Metal decking
7. Railings
8. Cleaning and painting metal surfaces.
9. All anchors, fastenings, hardware, accessories and other supplementary appurtenances necessary to complete the work.

All metal surfaces of components for service platforms shall be hot-dip galvanized after fabrication in accordance with Section 75-1.05, "Galvanizing," of the Standard Specifications, unless otherwise noted. The minimum weight of galvanized coating shall be 460 grams per square meter of surface area, except grates shall have a minimum of 610 grams per square meter of surface area.

Except for the locations listed below, all permanently exposed galvanized metal surfaces shall be cleaned and painted in conformance with the provisions for painting galvanized surfaces in "Clean and Paint Structural Steel" of these special provisions:

A. Steel decking
B. Lower framing sections including hangers and kicker
C. Stairway tread
D. Checkered plates for floor access openings

Structural steel shall conform to the provisions in "Steel Structures" of these special provisions. Headed studs shall conform to the requirements for stud connectors in Section 55, "Steel Structures," of the Standard Specifications.

Reinforced concrete for service platforms shall conform to the provisions in "Concrete Structures" of these special provisions and the provisions specified herein.

Shotcrete shall not be used.

Checkered plates for floor access openings shall be of commercial quality steel with standard raised pattern.

Grating for stairway shall conform to Section 56-1.02F, "Steel Walkway Gratings," of the Standard Specifications.

Unless otherwise specified, all anchors, fastenings, hardware, accessories and other appurtenances necessary to complete the work shall conform to the provisions in "Miscellaneous Bridge Metal" of these special provisions:

WORKING DRAWINGS

The Contractor shall submit working drawings in conformance with the provisions in "Working Drawings" of these special provisions, and these special provisions, except that the time allowed for the Engineer's shall be 20 working days.

Working drawing submittals shall include the following:

A. Fabrication plans including all details, elevations, and sections of the service platforms as shown on the plans. All dimensions and design tolerances shall be specified.
B. All ASTM or other material designations.
C. Detailed working drawings for metal decking showing the grade of steel, the physical and section properties for all deck members, the method of support and grade adjustment, accommodation for skew, and methods of sealing against grout leaks.
D. Service platforms installation plans including methods, materials, equipment, sequence, lifting mechanisms and locations.
E. Manufacturer's specifications, anchor details and installation instructions for products used in miscellaneous metal fabrications.

No fabrication of the service platforms shall begin until complete working drawings are reviewed and approved, in writing, by the Engineer.

METAL DECKING

Steel decking shall be installed in conformance with the approved working drawings.

Welding shall conform to AWS D1.3/D1.3M-08 and "Welding Quality Control" elsewhere in these special provisions.

Welds shall be cleaned immediately by wire brushing, and shall be coated with galvanizing repair material before being covered by the succeeding sheet.

Transverse deck construction joints will not be allowed.

Permanently exposed galvanized surfaces that are abraded or damaged prior to installation shall be repaired by thoroughly wire brushing the damaged areas and removing all loose and cracked coating, after which the cleaned areas shall be painted with 2 applications of unthinned zinc-rich primer (organic vehicle type) conforming to the provisions in Section 91, "Paint," of the Standard Specifications. Aerosol cans shall not be used. Minor heat discoloration in area of welds need not be repaired.

RAILING

Railing shall conform to the provisions in Section 83-1.02G(2), "Railing (Tubular)," of the Standard Specifications and these special provisions.

Railing grill shall conform to the provisions in Section 56-1.02F, "Steel Walkway Gratings," of the Standard Specifications.

Ends of railing pipe for stairway shall be closed, except for a 3 mm diameter weep hole at the low point.

All corners on railings shall be rounded. Simple and compound curves shall be formed by bending pipe in jigs to produce uniform curvature; maintain cylindrical cross-section of pipe throughout the bend without buckling, twisting or otherwise deforming exposed surfaces of the pipe.

Wall brackets, end closures, flanges, miscellaneous fitting and anchors shall be provided for interconnections of pipe and attachment of railings and handrails to other work. Inserts and other anchorage devices shall be furnished for connecting railings and handrails to concrete or masonry.

After galvanizing, all elements of the railing shall be free of fins, abrasions, rough or sharp edges, and other surface defects and shall not be kinked, twisted or bent. If straightening is necessary, it shall be done by methods approved by the Engineer. Kinks, twists or bends in the railing may be cause for rejection of the railing.

Railings shall be preassembled in shop to the greatest extent possible to minimize field welding and assembly. Units shall be disassembled only as necessary for shipping and handling limitations. All units shall be clearly match marked for reassembly and installation.

MEASUREMENT AND PAYMENT

Service platforms will be measured by the unit from actual count, regardless of size.

The contract unit price paid for service platform shall include full compensation for furnishing all labor, materials, tools, equipment, and incidentals, and for doing all the work involved in constructing service platforms, complete in place, including reinforced concrete, structural steel, metal decking, railings, stairways, checkered plates, galvanizing, cleaning and painting, and miscellaneous metal items, as shown on the plans, as specified in the Standard Specifications and these special provisions, and as directed by the Engineer.

REGISTERED PROFESSIONAL ENGINEER
GREGORY BENKOVICH
No. C 040518
Exp. 3/31/09
CIVIL
STATE OF CALIFORNIA

CONTRACT NO. 04-012004

CCO # 57

Sheet 12 of 25

DIST	COUNTY	ROUTE	KILOMETER POST TOTAL PROJECT	SHEET NO	TOTAL SHEETS
04	Ala	80	1.6/2.7	340R1	643

REGISTERED CIVIL ENGINEER 12-12-06 DATE

1-29-07
PLANS APPROVAL DATE

REGISTERED PROFESSIONAL ENGINEER JAIME E. GUTIERREZ No. C 052324 Exp. 12-31-08 CIVIL STATE OF CALIFORNIA

~~GENERAL NOTES~~
~~LOAD FACTOR DESIGN~~
~~(FOR SERVICE PLATFORMS)~~

~~DESIGN: CALTRANS BRIDGE DESIGN SPECIFICATIONS, LRFD (Version April 2000 (1996 AASHTO with Interims and Revisions by Caltrans).~~

~~1. The concrete slab shall be normal weight concrete with minimum compressive ultimate strength of 31 MPa at 28 days. Concrete slab reinforcement shall be welded wire fabric with a yield strength of 450 MPa.~~

~~2. Dead Load~~
~~In addition to the structure's own weight, the following super-imposed dead loads have been included in the design of various structural components: stainless steel railings/equipment/cabinets, railings and stairs.~~

~~3. Live Load~~
~~The platform is designed for a uniformly distributed live load of 4 kPa (85 psf) in accordance with Sect. 3.14 of the Bridge Design Specifications.~~

~~STRUCTURAL NOTES~~
~~(FOR SERVICE PLATFORMS)~~

~~1. All structural steel shall be ASTM A709 Grade 36.~~

~~2. All bolts shall be high strength steel bolts conforming to ASTM 325 Specified and shall be 19.05 mm diameter unless noted otherwise on the plans.~~

~~3. Steel grating shall be hot dip galvanized grating with 25 mm x 5 mm bars @ 30 mm. Grating shall be spot welded to supports. Spot welds shall be spaced at no more than 50 mm apart.~~

~~4. All structural steel shall be hot dip galvanized.~~

~~5. Steel decking and accessories shall be formed from steel conforming to the requirements in ASTM Designation: A653/A653M (Designation SS, Grades 33 through 80) having a coating designation G165.~~

~~6. Steel deck units shall be fastened to the steel framework at ends of units and at all intermediate supports by 13 mm effective diameter puddle welds spaced not more than 305 mm across the width of the unit. Where two units abut, each unit shall be so fastened to the steel framing. Boundary puddle welds at perimeter supports shall be 13 mm effective diameter at 305 mm maximum spacing. Shear connector studs are required at beams provided that the studs are welded to the beams through the deck units.~~

~~7. Seam attachment on sidelaps of adjacent deck units shall be done with 38.1 mm side seam welds at maximum spacing of 305 mm on centers.~~

~~8. Steel deck units shall have continuous span of 3 or more.~~

INDEX TO PLANS

SHEET NO.	TITLE
338	SERVICE PLATFORMS, UTILITY VAULT AND PRECAST WALL GENERAL PLAN 1
339	SERVICE PLATFORMS, UTILITY VAULT AND PRECAST WALL GENERAL PLAN 2
340R1	SERVICE PLATFORMS, UTILITY VAULT AND PRECAST WALL INDEX TO PLAN
	~~SERVICE PLATFORMS PLANS AND SECTIONS~~
	~~SERVICE PLATFORM DETAILS 1~~
	~~SERVICE PLATFORM DETAILS 2~~
	~~SERVICE PLATFORM DETAILS 3~~
	~~SERVICE PLATFORM DETAILS 4~~
	~~SERVICE PLATFORM DETAILS 5~~
347	UTILITY VAULTS
348	PRECAST WALL AND BARRIER SLAB DETAILS-1
349	PRECAST WALL AND BARRIER SLAB DETAILS-2
350	PRECAST WALL AND BARRIER SLAB DETAILS-3

STANDARD PLANS (DATED JULY 2004)

A10A	ACRONYMS AND ABBREVIATIONS (A-L)
A10B	ACRONYMS AND ABBREVIATIONS (M-Z)
B3-8	RETAINING WALL DETAILS NO.1

STANDARD PLAN SHEET NO.

DETAIL NO.

ALL DIMENSIONS ARE IN MILLIMETERS UNLESS OTHERWISE SHOWN

DESIGN	R.N.Guitierlano	CHECKED	H.A.Le
DETAILS	L.Ma	CHECKED	H.A.Le
QUANTITIES	R.N.Guitierlano	CHECKED	G.T.Agho

STATE OF CALIFORNIA
DEPARTMENT OF TRANSPORTATION

DIVISION OF ENGINEERING SERVICES
STRUCTURE DESIGN
DESIGN BRANCH 16

BRIDGE NO. 34-0006L/R
KILOMETER POST 1.6

OAKLAND APPROACH STRUCTURES
SERVICE PLATFORMS, UTILITY VAULT AND PRECAST WALL INDEX TO PLAN

SHEET 3 OF 13

CU 04251
EA 012041

FILE =: 34-0006L-T16.dgn

STRUCTURES DESIGN DETAIL SHEET DGN TEMPLATE (REV.09-19-04)

CONTRACT NO. 04-0120L4

CCO # 57

Sheet 13 of 25

SHEET NO.	DRAWING TITLE
340ARO	SERVICE PLATFORMS GENERAL STRUCTURAL NOTES
341R1	SERVICE PLATFORMS, FRAMING PLANS AND SECTION
342R1	SERVICE PLATFORMS, PLAN, DETAIL AND SECTION.
343R1	SERVICE PLATFORMS, ELEVATIONS
344R1	SERVICE PLATFORMS, HANGER DETAIL AND SECTIONS
345R1	SERVICE PLATFORMS, SECTIONS
346R1	SERVICE PLATFORMS, DETAILS AND SECTIONS (SHEET 1 OF 3)
346ARO	SERVICE PLATFORMS, DETAILS AND SECTIONS (SHEET 2 OF 3)
346BRO	SERVICE PLATFORMS, DETAILS AND SECTIONS (SHEET 3 OF 3)
346CRO	SERVICE PLATFORMS, LADDER DETAILS AND SECTIONS
346DRO	SERVICE PLATFORMS, DETAILS AND SECTIONS (SHEET 1 OF 2)
346ERO	SERVICE PLATFORMS, DETAILS AND SECTIONS (SHEET 2 OF 2)

GENERAL NOTES

A. STRUCTURAL STEEL

A1. All structural steel shall be AASHTO M270M Grade 36.

A2. Steel pipe shall be ASTM A-53 grade B.

A3. All bolts shall be high-strength steel bolts conforming to AASHTO M164(ASTM A325) Slip-Critical Class C and shall be 19.05 mm diameter unless noted otherwise on plans.

A4. Steel Grating for stairway shall be Hot-Dipped Galvanized Grating with 32 mm x 5 mm bars @ 30 mm (1"x3/16@ 1-3/16) by Ryerson Steel (Type 19-W-4), or by IKG Industry or equal. Grating shall be spot-welded to supports. Spot welds shall be spaced at no more than 150 mm apart.

A5. All structural steel shall be Hot-dipped galvanized.

A6. Corrugated steel deck units shall be formed from steel sheets conforming to ASTM-A466M. Before forming, the steel sheet shall be coated with zinc coating (Galvanized).

A7. All steel deck units shall be type B by United Steel Deck, Inc or approved equal. Deck unit shall be 1.32 mm (18 gauge) thick with 38.1 mm (1½") rib height and with corrugations at 152 mm (6") on center.

A8. Steel deck units shall be fastened to the steel framework at ends of units and at all intermediate supports by 12.7 mm (1/2") effective diameter puddle welds spaced not more than 305 mm (12 inches) across the width of the unit. Where two units abut, each unit shall be so fastened to the steel framing. Boundary puddle welds at perimeter supports shall be 12.7 mm (1/2") effective diameter at 305 mm (12") maximum spacing. Omit welds where headed studs are required at beams provided that the studs are welded to the beams through the deck units.

A9. Seam attachment or sidelaps at adjacent units shall be done with 38.1 mm (1½") side seam welds at maximum spacing of 305 mm (12") O.C.

A10. Steel deck units shall be classified by Underwriter's Laboratories, Inc. Each unit or bundle shall be labeled and marked as required by UL, indicating manufacture, testing and inspection.

A11. Steel deck units shall have continuous span of 3 or more.

B. REINFORCED CONCRETE

B1. The concrete slab shall be normal weight concrete with minimum compressive cylinder strength of 21 MPa at 28 days. Concrete slab reinforcement shall be welded wire fabric with a yield strength of 450 MPa.

C. DESIGN LOADS

C1. Dead Load
In addition to the structure's own weight, the following super-imposed dead loads have been included in the design of various structural components: electrical cabinets/equipments/cables, railings and stairs.

C2. Live Load
The platform is designed for a uniformly distributed live load of 2 kPa (40 psf).

C3. Wind Load
The platform is designed for uniformly distributed wind load on vertical surfaces of 2.4 kPa (50psf)

C4. Earthquake
The following site specific seismic response curve has been used

PERIOD OF STRUCTURE (sec)	TRANSVERSE DIRECTION SPECTRAL ACCELERATION (g)	LONGITUDINAL DIRECTION SPECTRAL ACCELERATION (g)	VERTICAL DIRECTION SPECTRAL ACCELERATION (g)
0.000	0.4840	0.4840	0.9985
0.100	0.5400	0.5400	1.3246
0.200	0.8406	0.8406	3.1586
0.300	0.8151	0.8151	1.4774
0.400	0.8151	0.8151	2.5880
0.500	1.4265	1.4265	2.374
0.530	1.2227	1.2227	1.7831
0.600	0.7132	0.7132	2.0582
0.700	0.5808	0.5808	3.4644
0.800	0.7132	0.7132	1.9868
0.900	0.6623	0.6623	3.1586
1.000	0.6928	0.6928	2.5472
1.100	0.7132	0.7132	1.9868
1.200	0.7896	0.7896	1.6812

D. CODES AND STANDARDS

D1. The structure has been designed in accordance with the following applicable codes and industry standards:

1. CBC California Building Code, 2001 Edition.
2. ACI American Concrete Institute "Building Code Requirements for Reinforced Concrete (ACI 318R-05)"
3. AISC American Institute of Steel Construction "Specification for structural steel buildings" (ANSI/AISC 360-05)

ORIGINAL SHEET SUPERCEDED

MARK	DATE	DESCRIPTIONS	BY	CH'D	CCO#
		REVISIONS			

CONTRACT CHANGE ORDER NO. 57
SHEET 14 OF 25 04-0120L4

ABBREVIATIONS

AB	Anchor Bolt
&	And
@	At
∠	Angle
Add'l	Additional
Bm	Beam
Bgr	Bearing
Bott	Bottom
B.O.	Bottom of
C	Channel(Structural)
Col	Column
Conc	Concrete
Const	Construction
Const Jt	Construction Joint
Cont	Continuous
Contr	Contraction
Comp	Composite
℄	Center Line
Clr	Clear
DL	Dead Load
Deg or °	Degree
Det	Detail
Diag	Diagonal
Dia or Ø	Diameter
Dim	Dimension
Dbl	Double
DN	Down
Dwg	Drawing
Do.	Ditto
Ea	Each
EF	Each Face
EW	Each way
EL	Elevation
EQ or =	Equal
Exp	Expansion
F to F	Face to Face
Fin	Finish
FB	Flat Bar
Fl	Floor
FD	Floor Drain
Ftg	Footing
Fdn	Foundation
F.S.	Far Side
Ga	Gage
Galv	Galvanized
Gr	Grade
HR	Hand Rail
Ht	Height
HP	High Point
H.S.	High Strength
H.S.B.	High Strength Bolt
Horiz	Horizontal
ID	Inside Diameter
IF	Inside Face
Inv	Invert
Jt	Joint
kg	Kilogram
kN	Kilonewton
kNa	Kilopascal
LS	Left side
L	Length
Lin	Linear, Lineal
LL	Live Load
Lg	Long
LP	Low Point
MH	Man Hole
MB	Machine Bolt
Mtl	Material
Max	Maximum
MPa	Megapascal
m	Meter
mm	Millimeter
Min	Minimum
Misc	Miscellaneous
M.C.	Moment Connection
NF	Near Face
Neg	Negative
Noml	Nominal
NIC	Not in Contract
No.	Number
#	Number (Rebar Size)
N.S.	Near Side
OC	On Center
Opng	Opening
Opp H	Opposite Hand
OD	Outside Diameter
O.F.	Outside Face
PL	Plate
R	Radius
Ref	Reference
Reinf	Reinforcing
RC	Reinforced Concrete
Rev	Revision or Revise
RS	Right Side
RD	Roof Drain
Sch	Schedule
Sect	Section
Sht	Sheet
Sim	Similar
Spec	Specification
Sq	Square
m	Square Meter
mm	Square Millimeter
Std	Standard
Stl	Steel
Stiff	Stiffener
Sym	Symmetrical
T & B	Top and Bottom
T.O.	Top of
T.O.C	Top of Concrete
T.O.P	Top of Plate
T.O.S	Top of Steel
Typ	Typical
UNO	Unless Noted Otherwise
Vert	Vertical
WP	Work Point
Wt	Weight
WL	Wind Load
W/	With

SYMBOLS

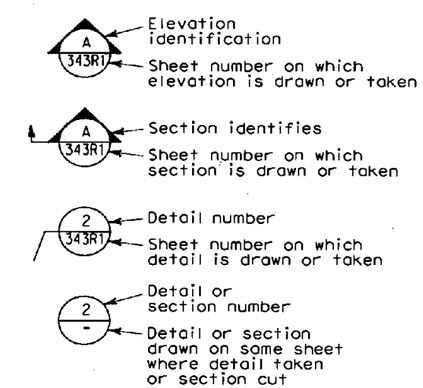

ALL DIMENSIONS ARE IN MILLIMETERS UNLESS OTHERWISE SHOWN

Caltrans Metric

DIST	COUNTY	ROUTE	KILOMETER POST TOTAL PROJECT	SHEET No	TOTAL SHEETS
04	Ala	80	1.6/2.7	340ARO	643

Gregory Benkovich 4/21/08
REGISTERED CIVIL ENGINEER
PLANS APPROVAL DATE
REGISTERED PROFESSIONAL ENGINEER Gregory Benkovich No. C40518 Exp. 3/31/09 CIVIL STATE OF CALIFORNIA

The State of California or its officers or agents shall not be responsible for the accuracy or completeness of electronic copies of this plan sheet.

Parsons Brinckerhoff Quade & Douglas, Inc.
303 Second Street, Suite 700N
San Francisco, CA 94107

Caltrans now has a web site! To get to the web site, go to: http://www.dot.ca.gov

BERNARD CHAN
DESIGN OVERSIGHT
SIGN OFF DATE

	BY	CHECKED
DESIGN	G. Benkovich	M.S. Owyong
DETAILS	O. Kurnavskaya	G. Benkovich
QUANTITIES	G. Benkovich	M.S. Owyong

PREPARED FOR THE STATE OF CALIFORNIA DEPARTMENT OF TRANSPORTATION

Mark Grodzki
PROJECT ENGINEER

BRIDGE NO. 34-0006 L/R
KILOMETER POST 1.6

OAKLAND TOUCHDOWN
SERVICE PLATFORMS GENERAL STRUCTURAL NOTES

DESIGN DETAIL SHEET (METRIC) (REV. 3/1/98)

ORIGINAL SCALE IN MILLIMETERS FOR REDUCED PLANS 0 10 20 30 40 50 60 70 80 90 100

CU 04251
EA 0120L1

DISREGARD PRINTS BEARING EARLIER REVISION DATES

REVISION DATES (PRELIMINARY STAGE ONLY) SHEET OF

FILE => T:\13103\MS\pse\OTD-Contract 1\CCO\CCO Service Platforms - Struc\34-0006-b-itp.dgn

USERNAME => reyesi DATE PLOTTED => 5/22/2008 TIME PLOTTED => 4:30:56 PM

DIST	COUNTY	ROUTE	KILOMETER POST TOTAL PROJECT	SHEET No	TOTAL SHEETS
04	Ala	80	1.6/2.7	341R1	643

Gregory Benkovich 4/21/08
REGISTERED CIVIL ENGINEER

PLANS APPROVAL DATE

Gregory Benkovich No. C40518 Exp. 3/31/09 CIVIL — REGISTERED PROFESSIONAL ENGINEER — STATE OF CALIFORNIA

The State of California or its officers or agents shall not be responsible for the accuracy or completeness of electronic copies of this plan sheet.

Parsons Brinckerhoff Quade & Douglas, Inc.
303 Second Street, Suite 700N
San Francisco, CA 94107

Caltrans now has a web site! To get to the web site, go to: http://www.dot.ca.gov

Caltrans Metric

NOTES:

1. The contractor shall verify all controlling field dimensions before ordering or fabricating any material.
2. For concrete pad location(s), see electrical plans. Concrete pad(s) size should be the cabinet size plus 102 mm around.
3. For structural notes see "General structural notes" sheet 340R1.
4. For dimensions "Y1", "Y2" and angle "∠"see "Service Platform Sections" sheet 345R1.
5. Top of platform shall be level, with minimum distance of 1500mm from top of concrete slab of the platform to the top of bridge roadway. This shall be achieved by varying height (see dimension "Y1") of W410 vertical hanger only. Varying thickness of the concrete slab to achieve level platform is not permissible.

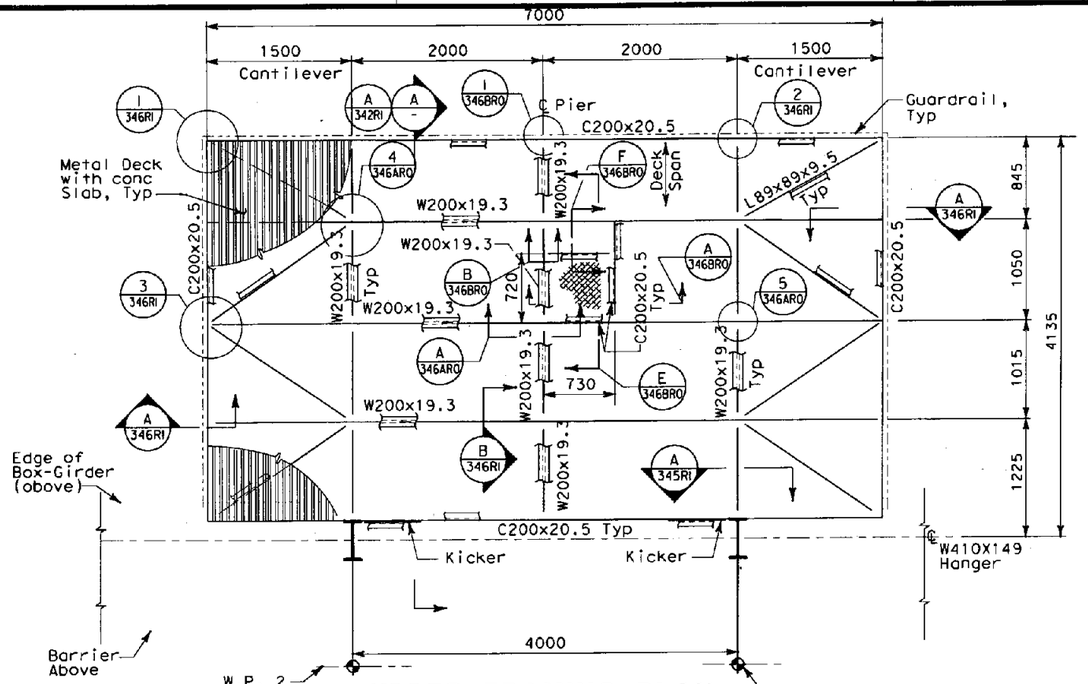

UPPER FRAMING PLAN

SCALE: 1:30

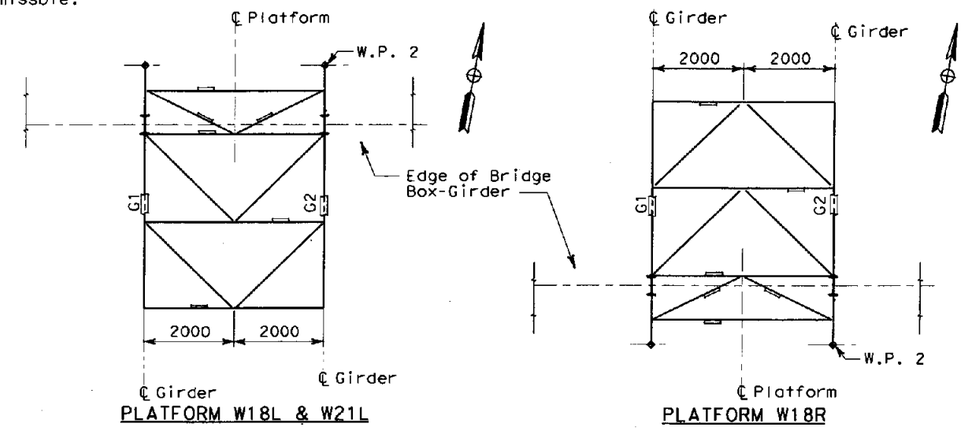

PLATFORM W18L & W21L

PLATFORM W18R

LOWER FRAMING KEY PLAN

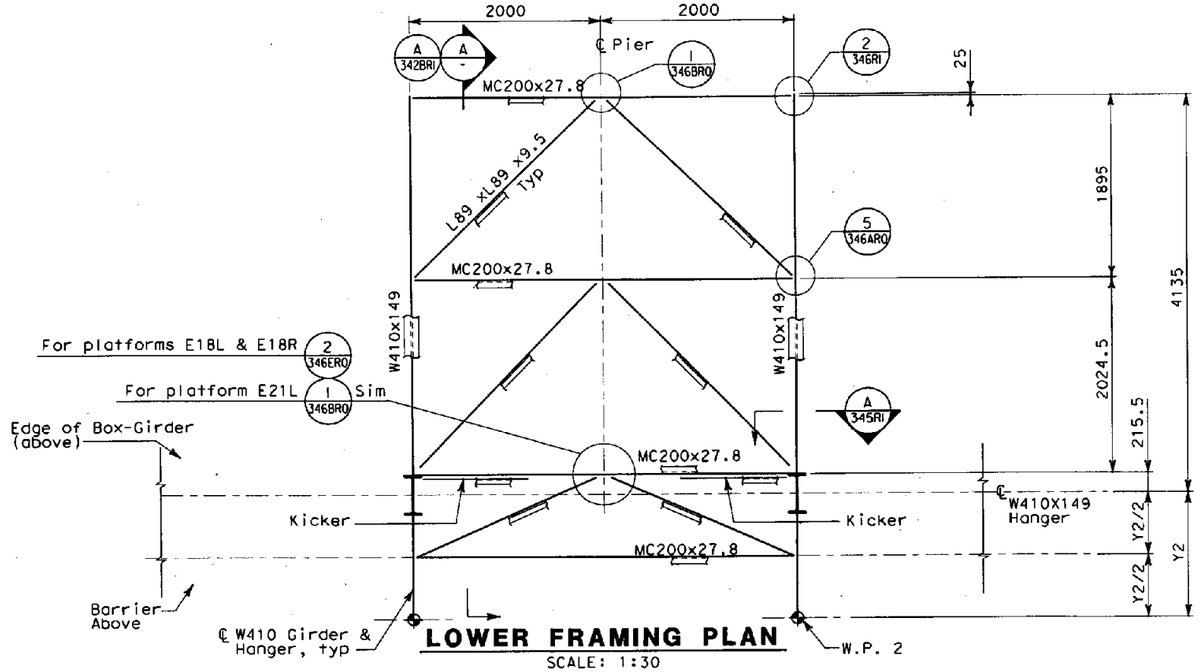

LOWER FRAMING PLAN

SCALE: 1:30

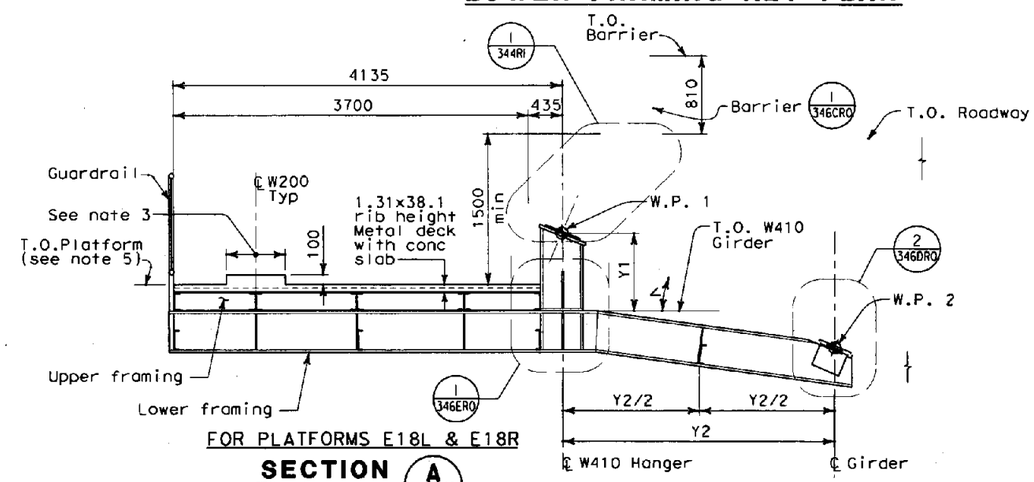

FOR PLATFORMS E18L & E18R

SECTION A

SCALE: 1:30

MARK	DATE	DESCRIPTIONS	BY	CH'D	CCO#
		REVISIONS			

ORIGINAL SHEET SUPERSEEDED

CONTRACT CHANGE ORDER NO. 57
SHEET 15 OF 25 04-0120L4

ALL DIMENSIONS ARE IN MILLIMETERS UNLESS OTHERWISE SHOWN

BERNARD CHAN
DESIGN OVERSIGHT
SIGN OFF DATE

	BY	CHECKED
DESIGN	G. Benkovich	M.S. Owyang
DETAILS	O. Kurnovskaya	G. Benkovich
QUANTITIES	G. Benkovich	M.S. Owyang

PREPARED FOR THE STATE OF CALIFORNIA DEPARTMENT OF TRANSPORTATION

Mark Gradzki
PROJECT ENGINEER

BRIDGE NO. 34-0006 L/R
KILOMETER POST 1.6

OAKLAND TOUCHDOWN

SERVICE PLATFORMS FRAMING PLANS AND SECTION

DESIGN DETAIL SHEET (METRIC) (REV. 3/1/98)

ORIGINAL SCALE IN MILLIMETERS FOR REDUCED PLANS 0 10 20 30 40 50 60 70 80 90 100

CU 04251
EA 0120L1

DISREGARD PRINTS BEARING EARLIER REVISION DATES

REVISION DATES (PRELIMINARY STAGE ONLY) SHEET OF

FILE => T:\13103\MS\pse\OTD-Contract 1\CCO\CCO Service Platforms - Struc\34-0006-u-miscdt01.dgn

USERNAME => reyest DATE PLOTTED => 5/22/2008 TIME PLOTTED => 4:32:56 PM

DIST	COUNTY	ROUTE	KILOMETER POST TOTAL PROJECT	SHEET NO	TOTAL SHEETS
04	Alo	80	1.6/2.7	342R1	643

Gregory Benkovich 4/21/08
REGISTERED CIVIL ENGINEER

PLANS APPROVAL DATE

REGISTERED PROFESSIONAL ENGINEER Gregory Benkovich No. C40518 Exp. 3/31/09 CIVIL STATE OF CALIFORNIA

The State of California or its officers or agents shall not be responsible for the accuracy or completeness of electronic copies of this plan sheet.

Parsons Brinckerhoff Quade & Douglas, Inc.
303 Second Street, Suite 700N
San Francisco, CA 94107

Caltrans now has a web site! To get to the web site, go to: http://www.dot.ca.gov

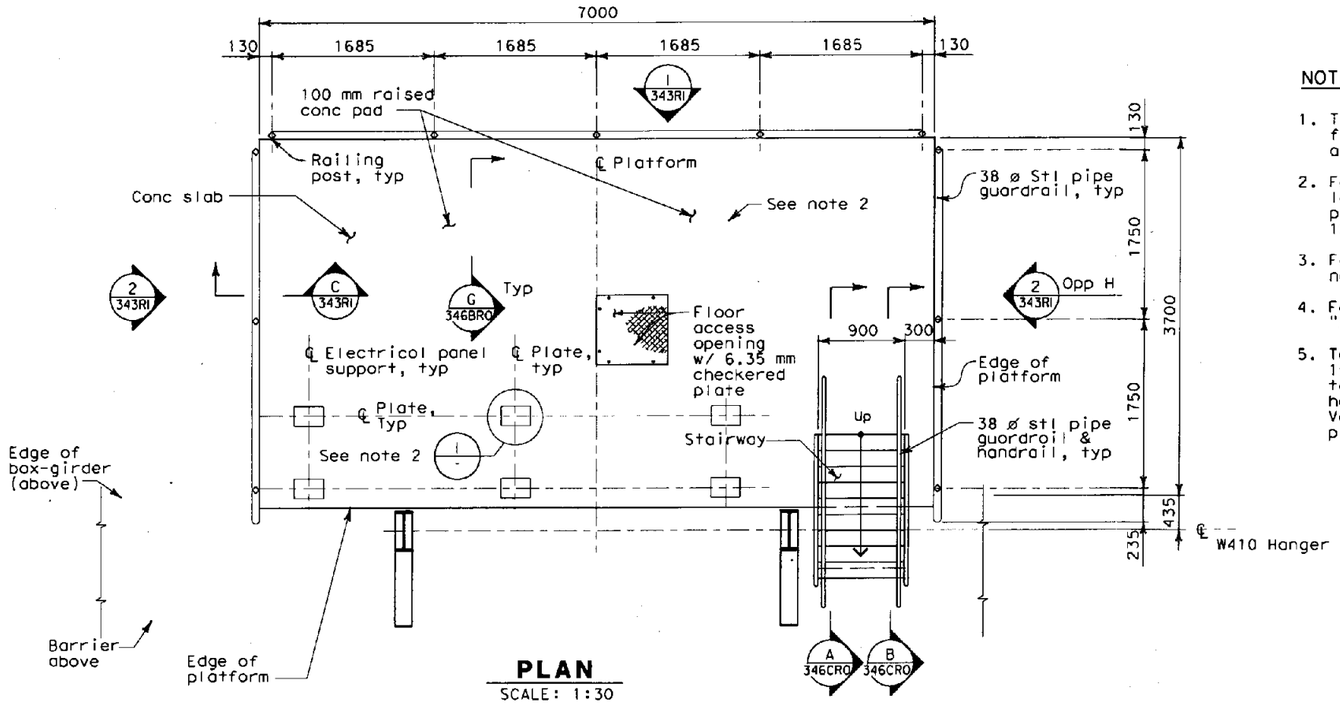

PLAN
SCALE: 1:30

NOTES:

1. The contractor shall verify all controlling field dimensions before ordering or fabricating any material.
2. For concrete pad and electrical panel support location(s), see electrical plans. Concrete pad(s) size should be the cabinet size plus 102 mm around.
3. For structural notes see "General structural notes" sheet 340R1.
4. For dimensions "Y1", "Y2" ans angle " " see "Service Platform Sections" sheet 345R1
5. Top of platform shall be level, with minimum distance of 1500mm from top of concrete slab of the platform to the top of bridge roadway. This shall be achieved by varying height (see dimension "Y1") of W410 vertical hanger only. Varying thickness of the concrete slab to achieve level platform is not permissble.

△ ORIGINAL SHEET SUPERSEEDED

MARK	DATE	DESCRIPTIONS	BY	CH'D	CCO#
△					

REVISIONS

CONTRACT CHANGE ORDER NO. 57
SHEET 16 OF 25 04-012014

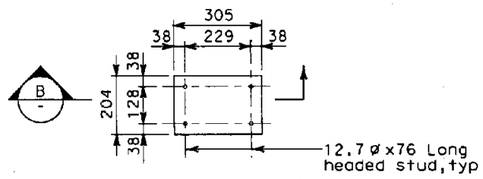

DETAIL I
SCALE: 1:10

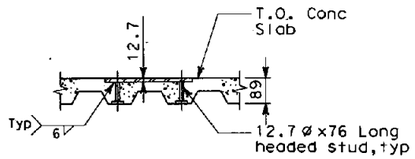

SECTION B
SCALE: 1:10

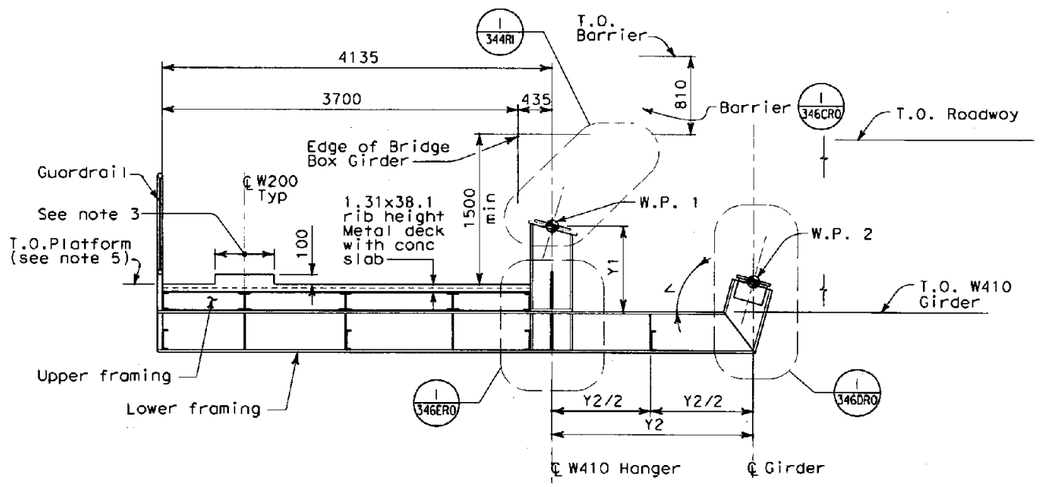

FOR PLATFORM E21L

SECTION A
SCALE: 1:30

ALL DIMENSIONS ARE IN MILLIMETERS UNLESS OTHERWISE SHOWN

BERNARD CHAN, DESIGN OVERSIGHT	DESIGN	BY G. Benkovich	CHECKED M.S. Owyang	PREPARED FOR THE STATE OF CALIFORNIA DEPARTMENT OF TRANSPORTATION
SIGN OFF DATE	DETAILS	BY O. Kurnovskaya	CHECKED G. Benkovich	
	QUANTITIES	BY G. Benkovich	CHECKED M.S. Owyang	

Mark Grodzki, PROJECT ENGINEER

BRIDGE NO. 34-0006 L/R
KILOMETER POST 1.6

OAKLAND TOUCHDOWN
SERVICE PLATFORMS PLAN, DETAILS AND SECTION

DESIGN DETAIL SHEET (METRIC) (REV. 3/1/98)

ORIGINAL SCALE IN MILLIMETERS FOR REDUCED PLANS 0 10 20 30 40 50 60 70 80 90 100

CU 04251
EA 0120L1

DISREGARD PRINTS BEARING EARLIER REVISION DATES

REVISION DATES (PRELIMINARY STAGE ONLY) SHEET OF

FILE => T:\13103\MS\pse\OTD-Contract 1\CCO\CCO Service Platforms - Struc\34-0006-u-miscdt02.dgn

USERNAME => reyesl DATE PLOTTED => 5/22/2008 TIME PLOTTED => 4:34:19 PM

DIST	COUNTY	ROUTE	KILOMETER POST TOTAL PROJECT	SHEET No	TOTAL SHEETS
04	Ala	80	1.6/2.7	343R1	643

Gregory Benkovich 4/21/08
REGISTERED CIVIL ENGINEER

PLANS APPROVAL DATE

REGISTERED PROFESSIONAL ENGINEER Gregory Benkovich No. C40518 Exp. 3/31/09 CIVIL STATE OF CALIFORNIA

The State of California or its officers or agents shall not be responsible for the accuracy or completeness of electronic copies of this plan sheet.

Parsons Brinckerhoff Quade & Douglas, Inc.
303 Second Street, Suite 700N
San Francisco, CA 94107

Caltrans now has a web site! To get to the web site, go to: http://www.dot.ca.gov

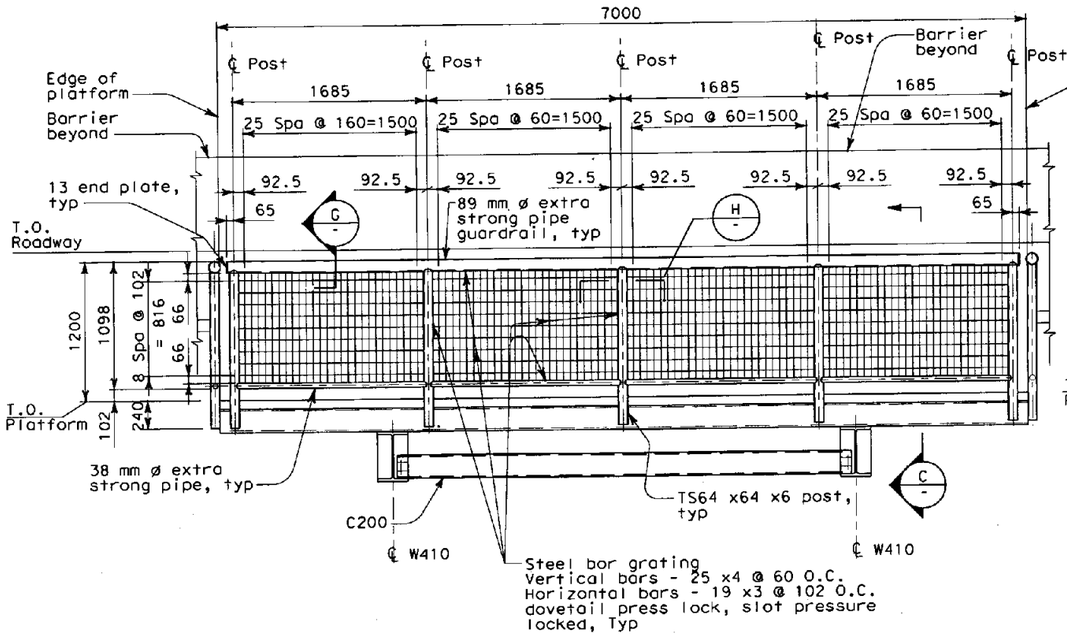

1 ELEVATION
342R1 SCALE: 1:25

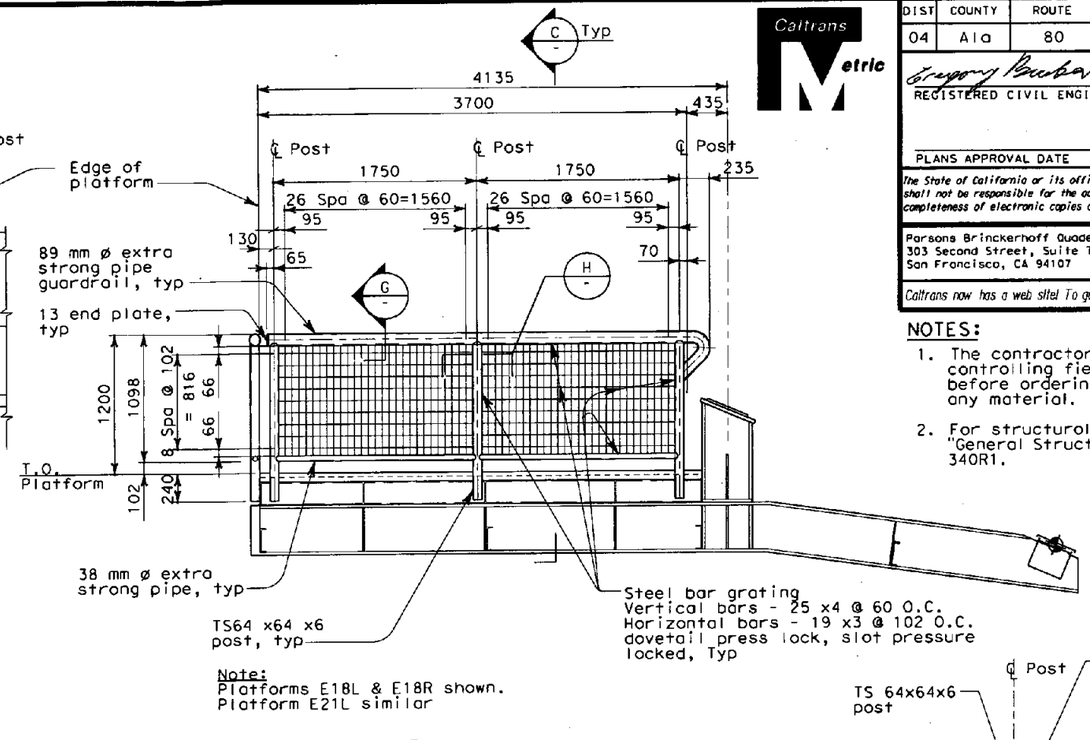

Note:
Platforms E18L & E18R shown.
Platform E21L similar

2 ELEVATION
342R1 SCALE: 1:25

NOTES:

1. The contractor shall verify all controlling field dimensions before ordering or fabricating any material.
2. For structural notes, see "General Structural Notes" sheet 340R1.

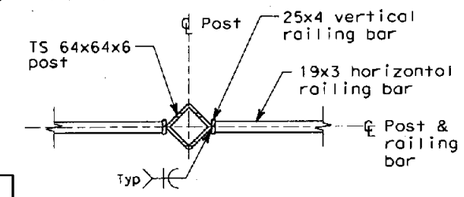

H SECTION
SCALE: 1:5

ORIGINAL SHEET SUPERCEDED

MARK	DATE	DESCRIPTIONS	BY	CH'D	CCO#
△					

REVISIONS

CONTRACT CHANGE ORDER NO. 57
SHEET 17 OF 25 04-0120L4

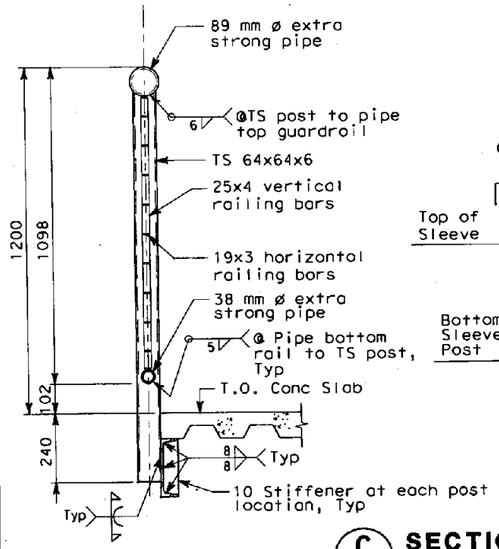

C SECTION
342R1 SCALE: 1:10

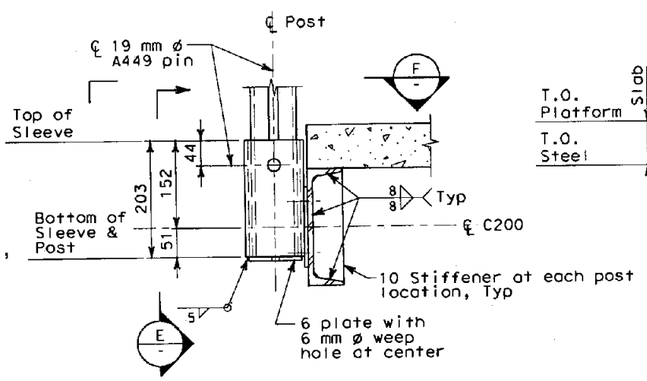

ALTERNATE BOLTED CONNECTIONS

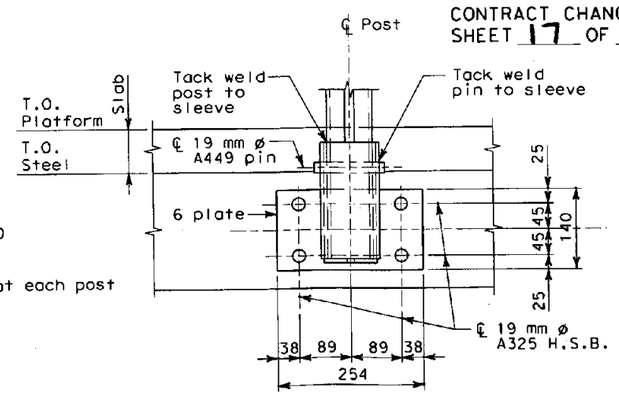

E SECTION
SCALE: 1:5

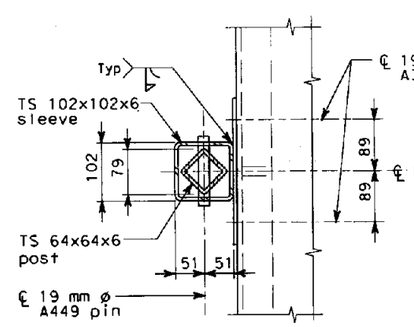

F SECTION
SCALE: 1:5

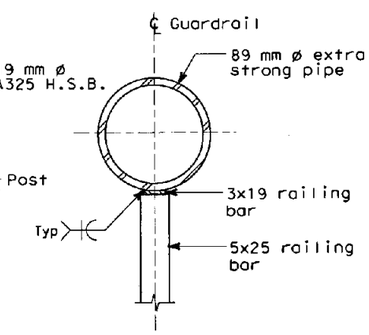

G SECTION
SCALE: 1:5

ALL DIMENSIONS ARE IN MILLIMETERS UNLESS OTHERWISE SHOWN

BERNARD CHAN
DESIGN OVERSIGHT
SIGN OFF DATE

	BY	CHECKED	BY
DESIGN	G. Benkovich	M.S. Owyang	
DETAILS	O. Kurnovskaya	G. Benkovich	
QUANTITIES	G. Benkovich	M.S. Owyang	

PREPARED FOR THE STATE OF CALIFORNIA DEPARTMENT OF TRANSPORTATION

Mark Grodzki
PROJECT ENGINEER

BRIDGE NO. 34-0006 L/R
KILOMETER POST 1.6

OAKLAND TOUCHDOWN
SERVICE PLATFORMS ELEVATIONS

CU 04251
EA 0120L1

DISREGARD PRINTS BEARING EARLIER REVISION DATES
REVISION DATES (PRELIMINARY STAGE ONLY)
SHEET OF

DESIGN DETAIL SHEET (METRIC) (REV. 3/1/98)
ORIGINAL SCALE IN MILLIMETERS FOR REDUCED PLANS 0 10 20 30 40 50 60 70 80 90 100
FILE => T:\13103\MS\pse\OTD-Contract 1\CCO\CCO Service Platforms - Struc\34-0006-u-miscdt03.dgn
USERNAME => reyesl DATE PLOTTED => 5/22/2008 TIME PLOTTED => 4:37:40 PM

DIST	COUNTY	ROUTE	KILOMETER POST TOTAL PROJECT	SHEET No	TOTAL SHEETS
04	Ala	80	1.6/2.7	344R1	643

Gregory Benkovich 4/21/08
REGISTERED CIVIL ENGINEER

PLANS APPROVAL DATE

REGISTERED PROFESSIONAL ENGINEER Gregory Benkovich No. C40518 Exp. 3/31/09 CIVIL STATE OF CALIFORNIA

The State of California or its officers or agents shall not be responsible for the accuracy or completeness of electronic copies of this plan sheet.

Parsons Brinckerhoff Quade & Douglas, Inc.
303 Second Street, Suite 700N
San Francisco, CA 94107

Caltrans now has a web site! To get to the web site, go to: http://www.dot.ca.gov

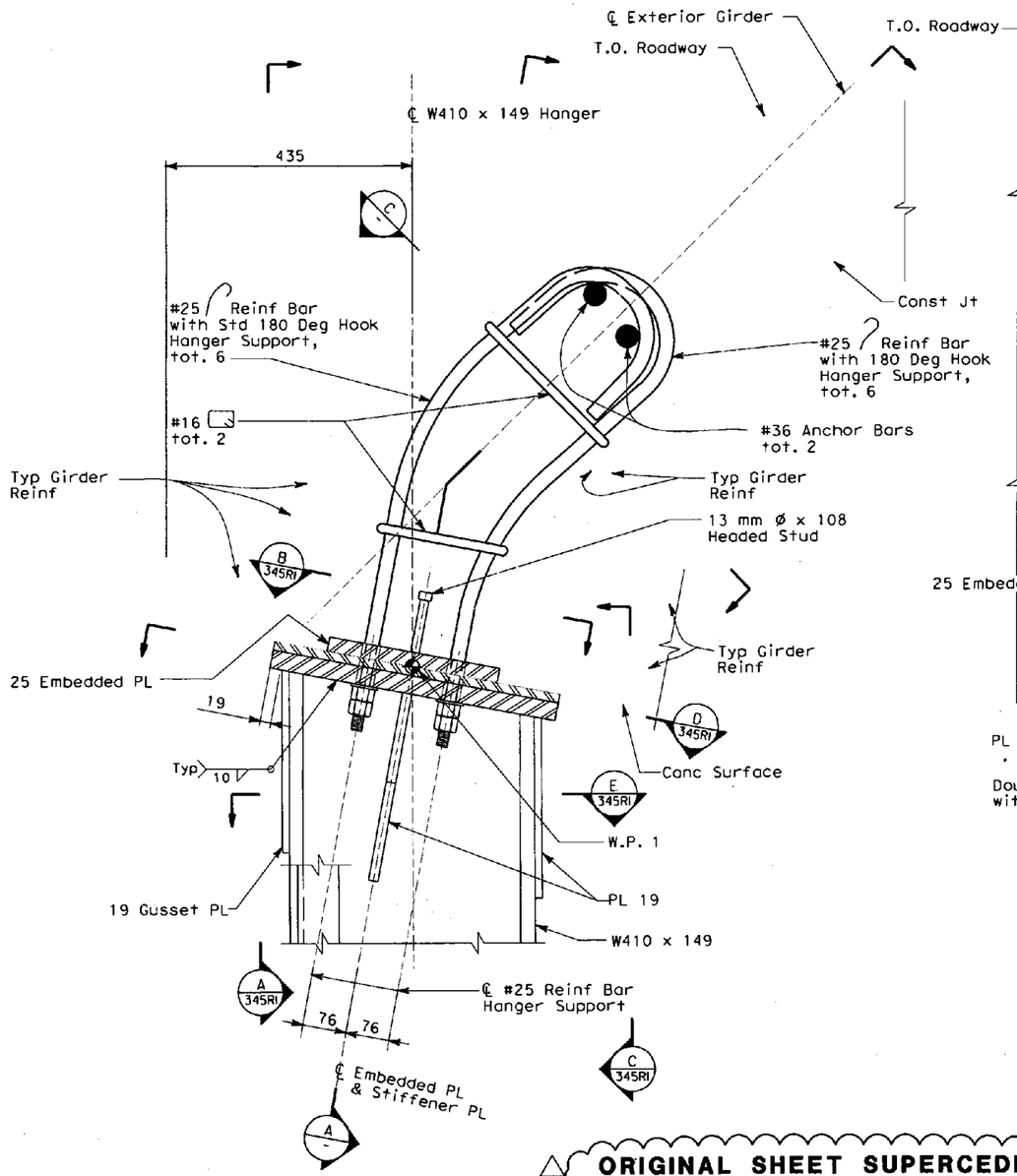

1 / 34IR1 **DETAIL**
SCALE: 1:5

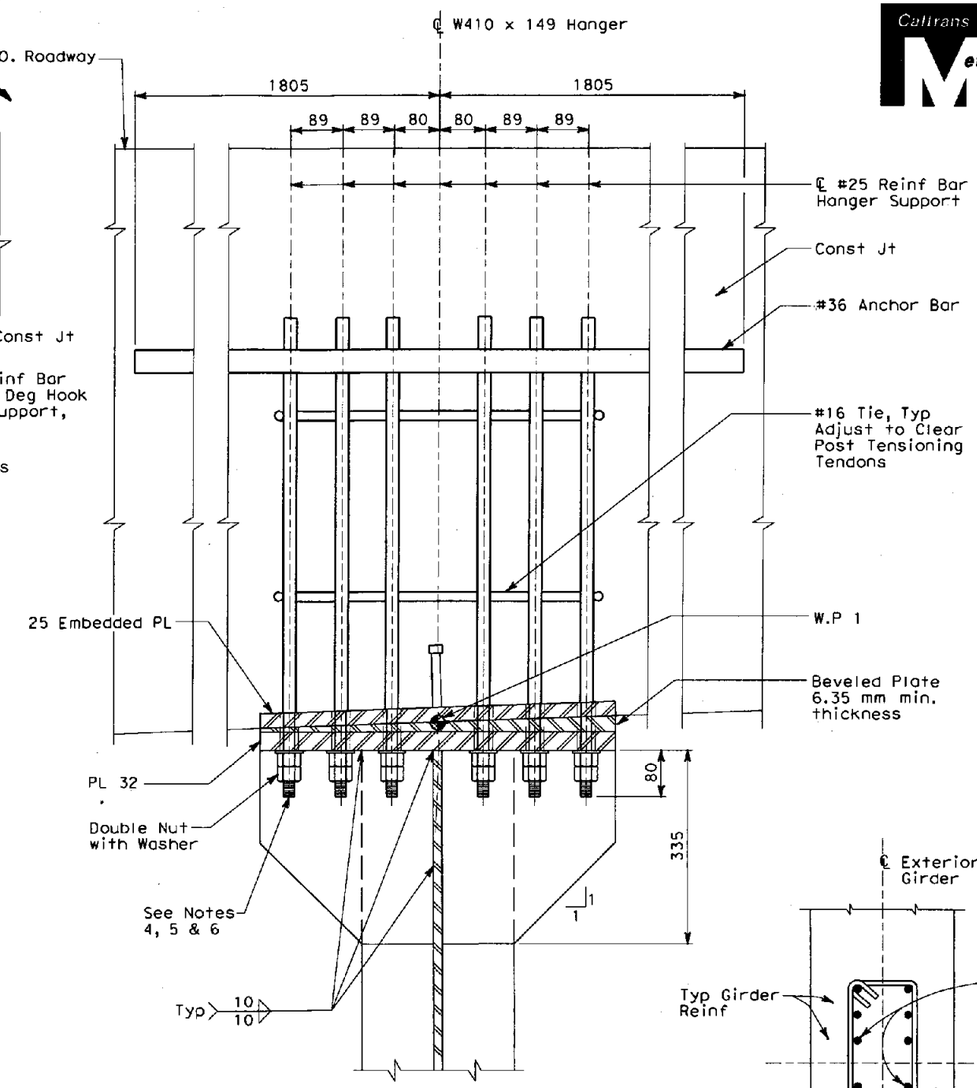

A / - **SECTION**
SCALE: 1:5

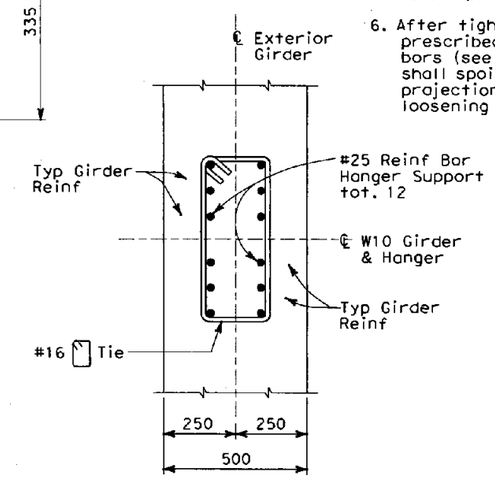

C / - **SECTION**
SCALE: 1:10

NOTES:

1. The contractor shall verify all controlling field dimensions before ordering or fabricating any material.
2. For locations of platform, see electrical sheets.
3. For structural notes, see "General Structural Notes" sheet 340R1
4. Before placing concrete, the contractor shall use temporory nuts, washers and 38 mm min thickness beveled plate to hold the #25 reinforcing bars in place. The temporary nuts with washers shall be tightened against 38 mm beveled plate to ensure the #25 reinforcing bars will not move or rotate and will remain in design position during concrete placement. Remove temporary nuts, washers and plate before installation of hanger assembly.
5. Each reinforcing bar shall be tensioned to a force of 17±1 kN (3.8 kips/bolt).
6. After tightening nuts to achieve prescribed tension in reinforcing bars (see note 5), the contractor shall spoil the threads on the projection to prevent unintended loosening of the nuts.

ORIGINAL SHEET SUPERCEDED

MARK	DATE	DESCRIPTIONS	BY	CH'D	CCO#
		REVISIONS			

CONTRACT CHANGE ORDER NO. 57
SHEET 18 OF 25 04-0120L4

ALL DIMENSIONS ARE IN MILLIMETERS UNLESS OTHERWISE SHOWN

BERNARD CHAN
DESIGN OVERSIGHT
SIGN OFF DATE

	BY	CHECKED
DESIGN	G. Benkovich	M.S. Owyang
DETAILS	O. Kurnovskaya	G. Benkovich
QUANTITIES	G. Benkovich	M.S. Owyang

PREPARED FOR THE STATE OF CALIFORNIA DEPARTMENT OF TRANSPORTATION

Mark Grodzki
PROJECT ENGINEER

BRIDGE NO. 34-0006 L/R
KILOMETER POST 1.6

OAKLAND TOUCHDOWN
SERVICE PLATFORMS HANGER DETAIL AND SECTIONS

DESIGN DETAIL SHEET (METRIC) (REV. 3/1/98)

ORIGINAL SCALE IN MILLIMETERS FOR REDUCED PLANS 0 10 20 30 40 50 60 70 80 90 100

CU 04251
EA 0120L1

DISREGARD PRINTS BEARING EARLIER REVISION DATES

REVISION DATES (PRELIMINARY STAGE ONLY) SHEET OF

FILE => T:\13103\MS\pse\OTD-Contract 1\CCO\CCO Service Platforms - Struc\34-0006-u-miscdt04.dgn

USERNAME => reyesl DATE PLOTTED => 5/22/2008 TIME PLOTTED => 4:38:45 PM

DIST	COUNTY	ROUTE	KILOMETER POST TOTAL PROJECT	SHEET NO	TOTAL SHEETS
04	Ala	80	1.6/2.7	345R1	643

Caltrans Metric

Gregory Benkovich 4/21/08
REGISTERED CIVIL ENGINEER

PLANS APPROVAL DATE

REGISTERED PROFESSIONAL ENGINEER Gregory Benkovich No. C40518 Exp. 3/31/09 CIVIL STATE OF CALIFORNIA

The State of California or its officers or agents shall not be responsible for the accuracy or completeness of electronic copies of this plan sheet.

Parsons Brinckerhoff Quade & Douglas, Inc.
303 Second Street, Suite 700N
San Francisco, CA 94107

Caltrans now has a web site! To get to the web site, go to: http://www.dot.ca.gov

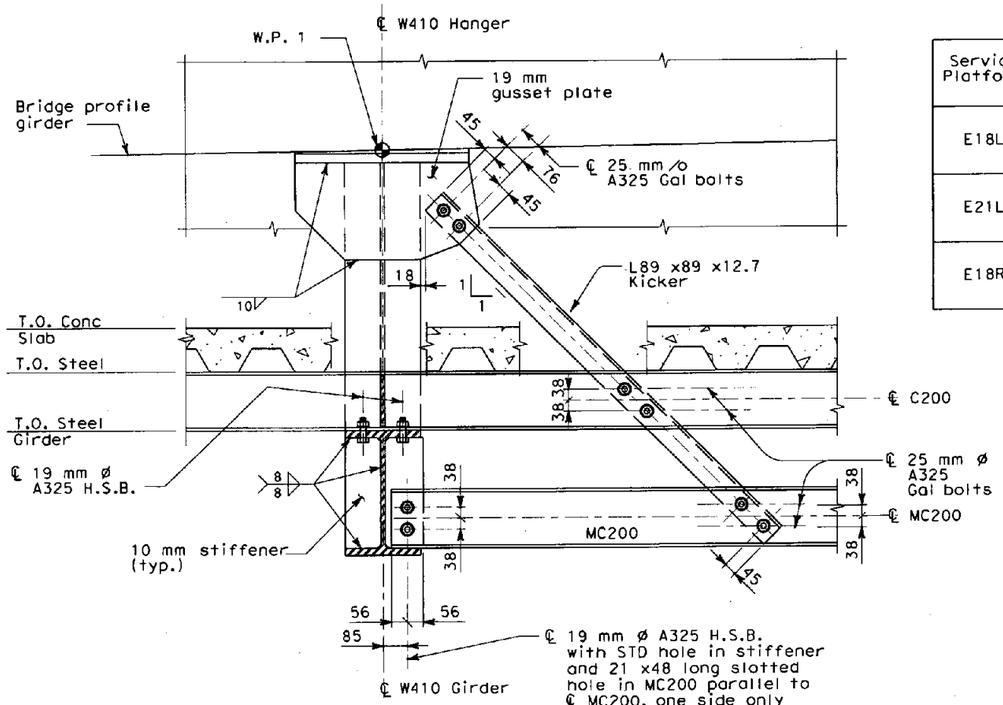

A 341R1 **SECTION**
SCALE: 1:10

DIMENSION TABLE

Service Platform	Service Platform Center Line Station	Girder Designation	Angle " " see note 4	Dimension Y1 see note 4	Dimension Y2 see note 4	Remarks
E18L	"W" 84+03	G1	12°22'00"±	918±	4810±	
		G2	12°18'00"±	842±	4810±	
E21L	"W" 85+55	G1	11°0'0" ±	931±	4045±	
		G2	11°0'00" ±	853±	4045±	
E18R	"E" 83+73.686	G1	11°22'00"±	912±	4810±	
		G2	11°14'00"±	835±	4810±	

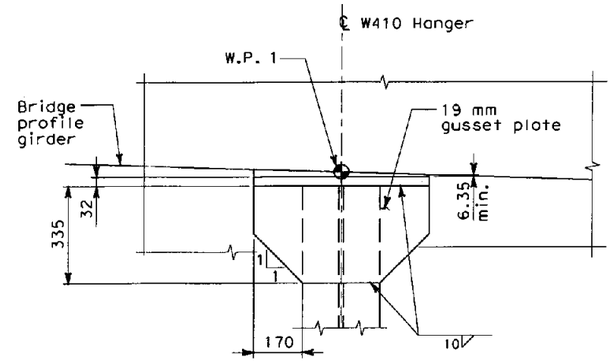

C 344R1 **SECTION**
SCALE: 1:10

NOTES:

1. The contractor shall verify all controlling field dimensions before ordering or fabricating any material.
2. For locations of platform, see electrical sheets.
3. For structural notes, see "General Structural Notes" sheet 340R1.
4. Angle and dimensions Y1 & Y2 are based on dimensions as designed, shown for information only and subject to field verification by the contractor.

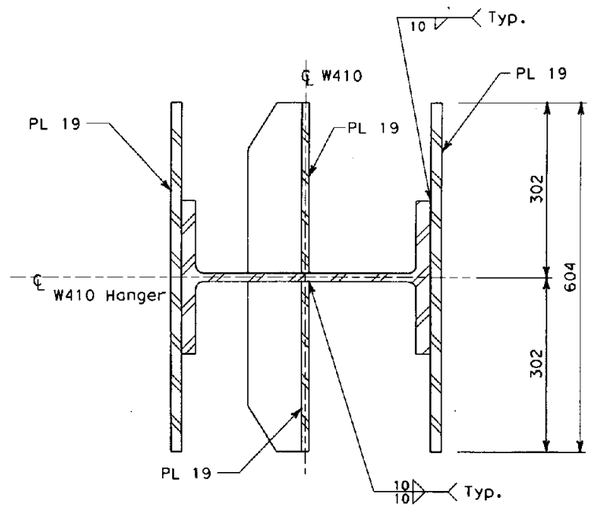

E 344R1 **SECTION**
SCALE: 1:5

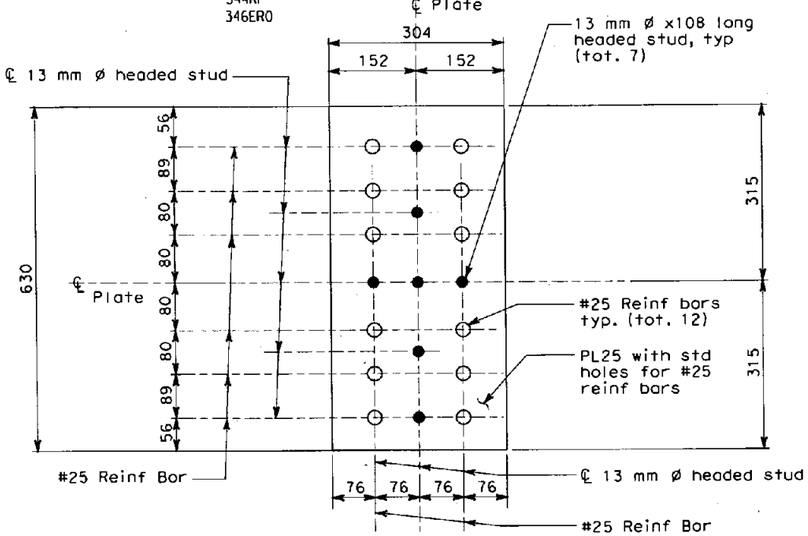

B 344R1 **SECTION**
SCALE: 1:5

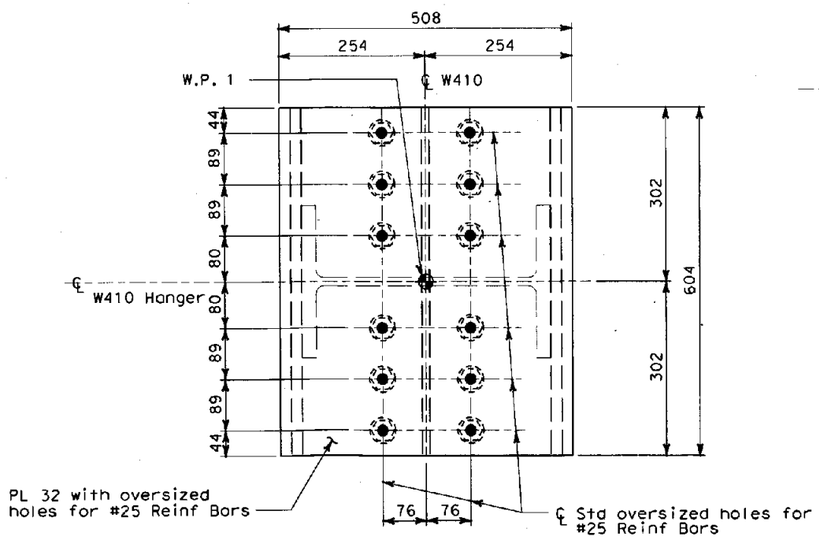

D 344R1 **SECTION**
SCALE: 1:5

ORIGINAL SHEET SUPERCEDED

MARK	DATE	DESCRIPTIONS	BY	CH'D	CCO#
		REVISIONS			

CONTRACT CHANGE ORDER NO. 57
SHEET 19 OF 25
04-0120L4

ALL DIMENSIONS ARE IN MILLIMETERS UNLESS OTHERWISE SHOWN

BERNARD CHAN
DESIGN OVERSIGHT
SIGN OFF DATE

DESIGN DETAIL SHEET (METRIC) (REV. 3/1/98)

	BY	CHECKED
DESIGN	G. Benkovich	M.S. Owyang
DETAILS	O. Kurnovskaya	G. Benkovich
QUANTITIES	G. Benkovich	M.S. Owyang

ORIGINAL SCALE IN MILLIMETERS FOR REDUCED PLANS 0 10 20 30 40 50 60 70 80 90 100

PREPARED FOR THE STATE OF CALIFORNIA DEPARTMENT OF TRANSPORTATION

Mark Grodzki
PROJECT ENGINEER

CU 04251
EA 0120L1

BRIDGE NO. 34-0006 L/R
KILOMETER POST 1.6

OAKLAND TOUCHDOWN
SERVICE PLATFORMS SECTIONS

DISREGARD PRINTS BEARING EARLIER REVISION DATES

REVISION DATES (PRELIMINARY STAGE ONLY)

SHEET OF

FILE => T:\13103\MS\pse\OTD-Contract 1\CCO\CCO Service Platforms - Struc\34-0006-u-miscdt05.dgn

USERNAME => reyesl DATE PLOTTED => 5/22/2008 TIME PLOTTED => 4:39:13 PM

DIST	COUNTY	ROUTE	KILOMETER POST TOTAL PROJECT	SHEET No	TOTAL SHEETS
04	Ala	80	1.6/2.7	346R1	643

Caltrans Metric

Gregory Benkovich 4/21/08
REGISTERED CIVIL ENGINEER

PLANS APPROVAL DATE

REGISTERED PROFESSIONAL ENGINEER Gregory Benkovich No. C40518 Exp. 3/31/09 CIVIL STATE OF CALIFORNIA

The State of California or its officers or agents shall not be responsible for the accuracy or completeness of electronic copies of this plan sheet.

Parsons Brinckerhoff Quade & Douglas, Inc.
303 Second Street, Suite 700N
San Francisco, CA 94107

Caltrans now has a web site! To get to the web site, go to: http://www.dot.ca.gov

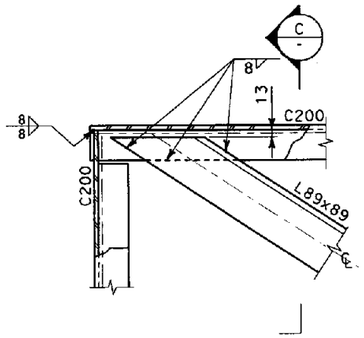

1 / 341R1 **DETAIL**
SCALE: 1:5

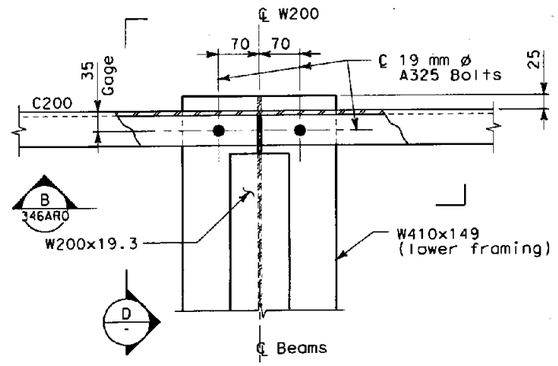

UPPER FRAMING

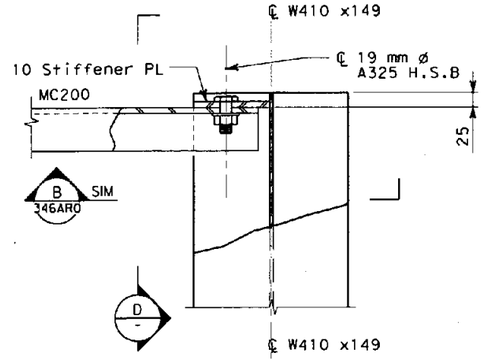

LOWER FRAMING

2 / 341R1 **DETAIL**
SCALE: 1:5

NOTES:

1. The contractor shall verify all controlling field dimensions before ordering or fabricating any material.
2. For locations of platform, see electrical sheets.
3. For structural notes, see "General Structural Notes" sheet 340R1.

△					
MARK	DATE	DESCRIPTIONS	BY	CH'D	CCO#
		REVISIONS			

CONTRACT CHANGE ORDER NO. 57
SHEET 20 OF 25 04-012OL4

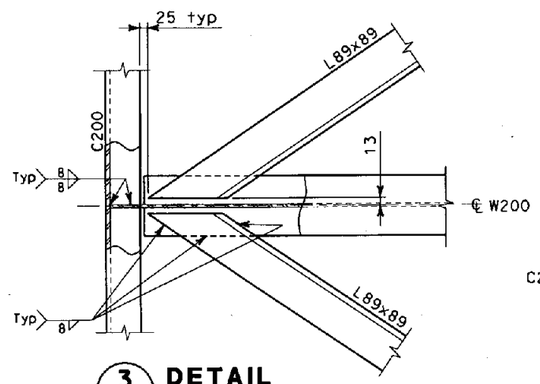

3 / 341R1 **DETAIL**
SCALE: 1:5

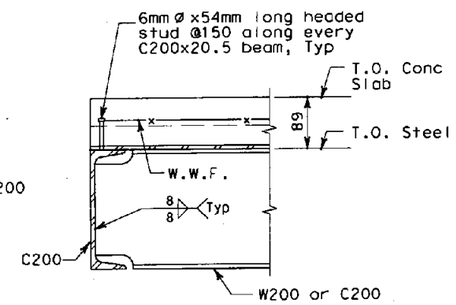

A / 341R1 **SECTION**
SCALE: 1:5

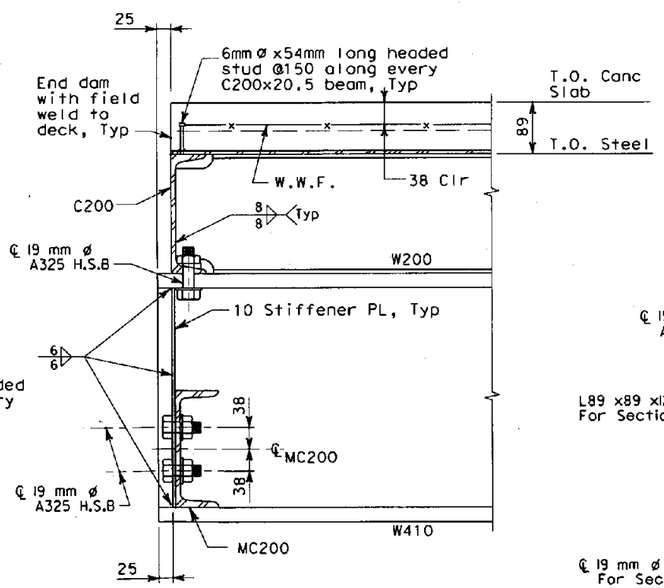

D / - **SECTION**
SCALE: 1:5

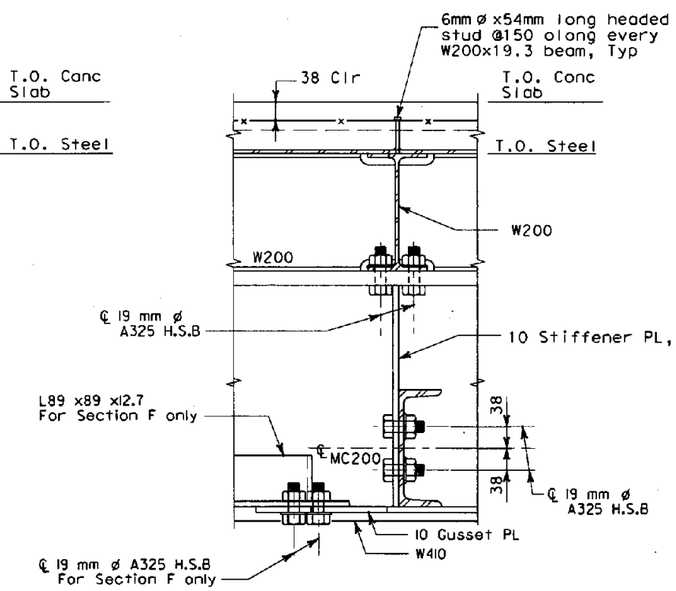

E / 346AR0 **SECTION**
SCALE: 1:5

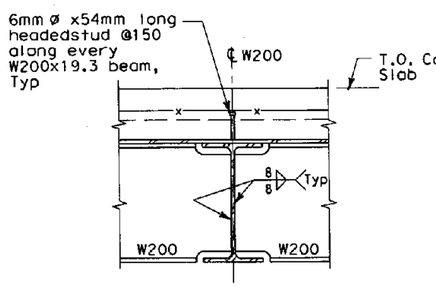

B / 341R1 **SECTION**
SCALE: 1:5

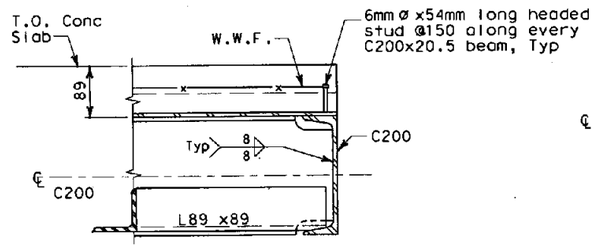

C / - **DETAIL**
SCALE: 1:5

△ **ORIGINAL SHEET SUPERCEDED**

ALL DIMENSIONS ARE IN MILLIMETERS UNLESS OTHERWISE SHOWN

BERNARD CHAN DESIGN OVERSIGHT SIGN OFF DATE		DESIGN	BY G. Benkovich	CHECKED M.S. Owyang	PREPARED FOR THE STATE OF CALIFORNIA DEPARTMENT OF TRANSPORTATION
		DETAILS	BY O. Kurnavskaya	CHECKED G. Benkovich	
		QUANTITIES	BY G. Benkovich	CHECKED M.S. Owyang	

Mark Grodzki
PROJECT ENGINEER

BRIDGE NO. 34-0006 L/R
KILOMETER POST 1.6

OAKLAND TOUCHDOWN

SERVICE PLATFORMS DETAILS AND SECTIONS (SHEET 1 OF 3)

DESIGN DETAIL SHEET (METRIC) (REV. 3/1/98)

ORIGINAL SCALE IN MILLIMETERS FOR REDUCED PLANS 0 10 20 30 40 50 60 70 80 90 100

CU 04251
EA 0120L1

DISREGARD PRINTS BEARING EARLIER REVISION DATES

REVISION DATES (PRELIMINARY STAGE ONLY) | SHEET | OF

FILE => T:\13103\MS\pse\OTD-Contract 1\CCO\CCO Service Platforms - Struc\34-0006-u-mlscdt06.dgn

USERNAME => reyes1 DATE PLOTTED => 5/22/2008 TIME PLOTTED => 4:59:56 PM

DIST	COUNTY	ROUTE	KILOMETER POST TOTAL PROJECT	SHEET No	TOTAL SHEETS
04	Ala	80	1.6/2.7	346A R0	643

Gregory Benkovich 4/21/08
REGISTERED CIVIL ENGINEER

PLANS APPROVAL DATE

REGISTERED PROFESSIONAL ENGINEER Gregory Benkovich No. C40518 Exp. 3/31/09 CIVIL STATE OF CALIFORNIA

The State of California or its officers or agents shall not be responsible for the accuracy or completeness of electronic copies of this plan sheet.

Parsons Brinckerhoff Quade & Douglas, Inc.
303 Second Street, Suite 700N
San Francisco, CA 94107

Caltrans now has a web site! To get to the web site, go to: http://www.dot.ca.gov

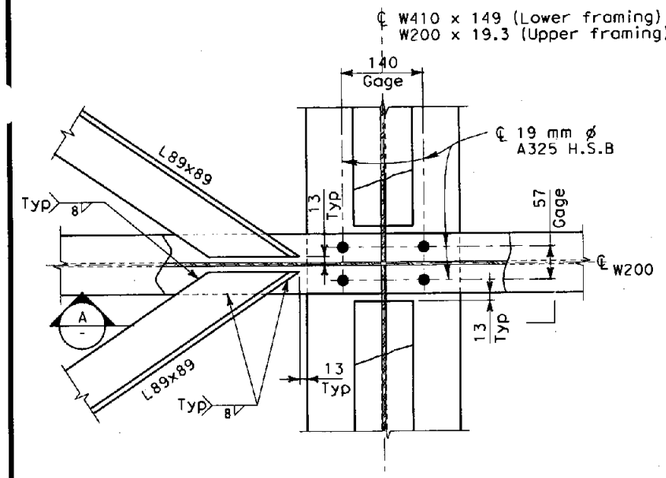

4 DETAIL (34IR1)
SCALE: 1:5

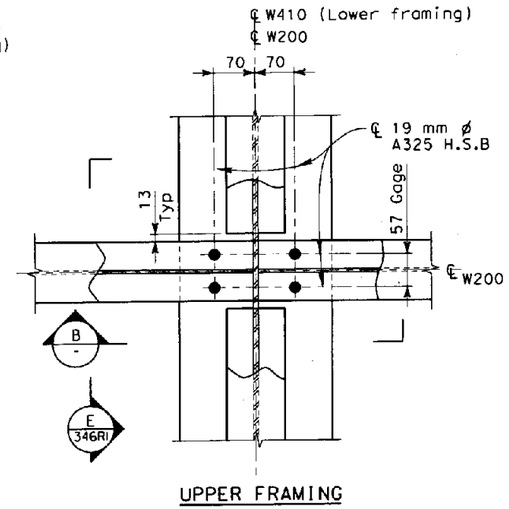

UPPER FRAMING

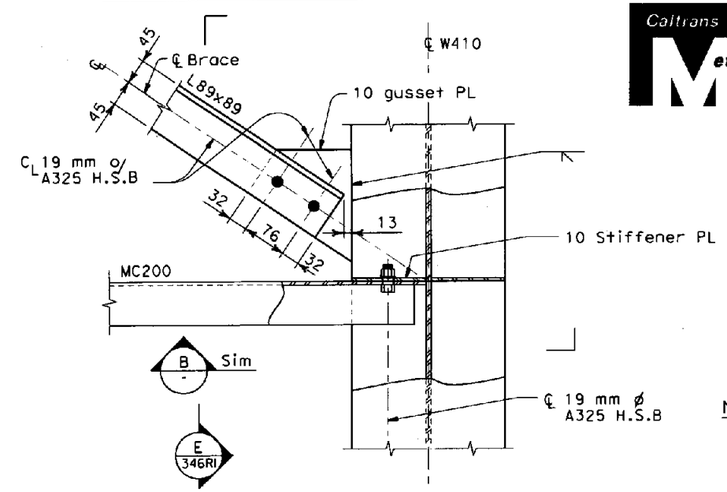

LOWER FRAMING

5 DETAIL (34IR1)
SCALE: 1:5

NOTES:

1. The contractor shall verify all controlling field dimensions before ordering or fabricating any material.
2. For locations of platform, see electrical sheets.
3. For structural notes, see "General Structural Notes" sheet 340R1.

DECKING & STUDS NOTES:

1. All Studs are 6 mm ø x54 mm long along every W200 and C200 framing member.

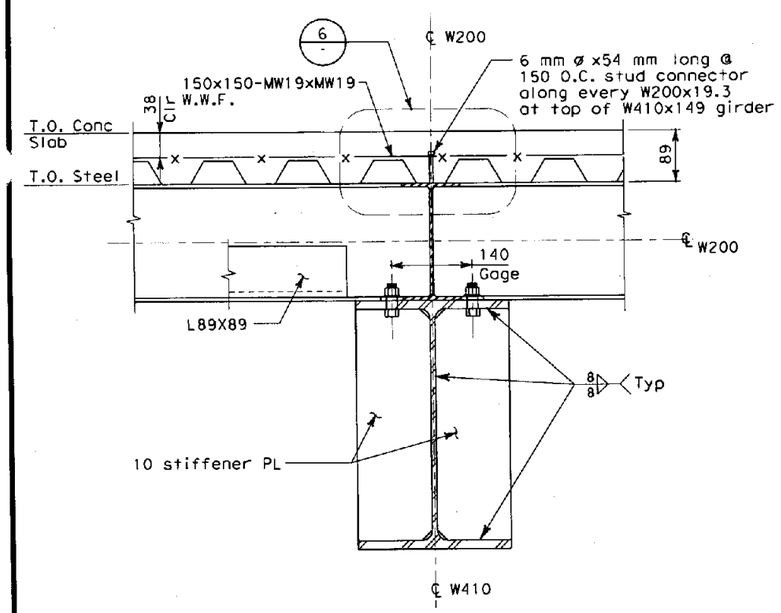

A SECTION (34IR1)
SCALE: 1:5

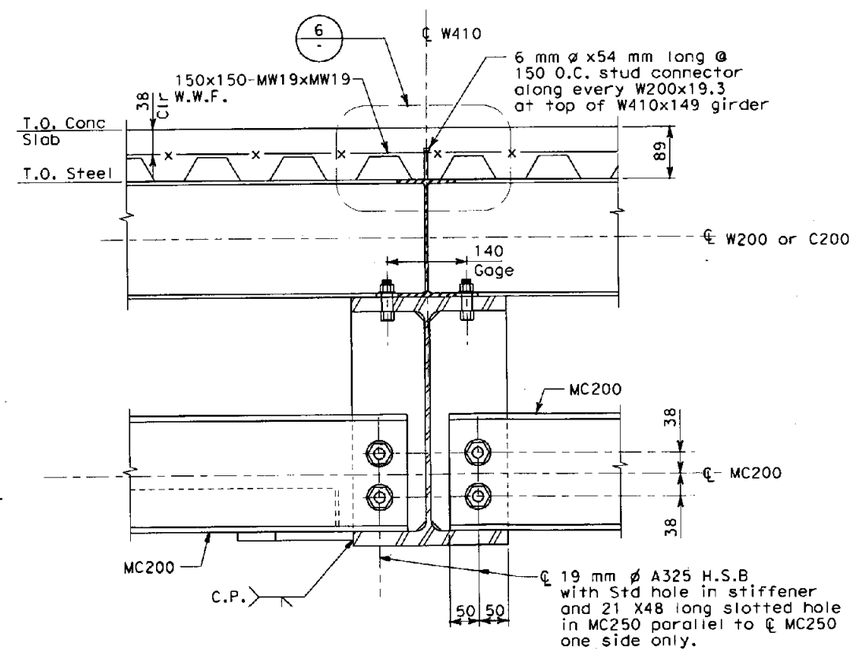

B SECTION (346R1)
SCALE: 1:5

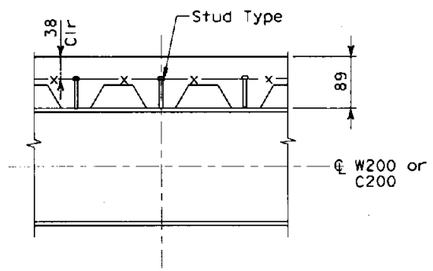

6 DETAIL
SCALE: 1:5

MARK	DATE	DESCRIPTIONS	BY	CH'D	CCO#
		REVISIONS			

CONTRACT CHANGE ORDER NO. 57
SHEET 21 OF 25 04-0120L4

ALL DIMENSIONS ARE IN MILLIMETERS UNLESS OTHERWISE SHOWN

BERNARD CHAN
DESIGN OVERSIGHT
SIGN OFF DATE

	BY	CHECKED
DESIGN	G. Benkovich	M.S. Owyang
DETAILS	O. Kurnovskaya	G. Benkovich
QUANTITIES	G. Benkovich	M.S. Owyang

PREPARED FOR THE STATE OF CALIFORNIA DEPARTMENT OF TRANSPORTATION

Mark Grodzki
PROJECT ENGINEER

BRIDGE NO. 34-0006 L/R
KILOMETER POST 1.6

OAKLAND TOUCHDOWN
SERVICE PLATFORMS DETAILS AND SECTION (SHEET 2 OF 3)

DESIGN DETAIL SHEET (METRIC) (REV. 3/1/98)

ORIGINAL SCALE IN MILLIMETERS FOR REDUCED PLANS 0 10 20 30 40 50 60 70 80 90 100

CU 04251
EA 0120L1

DISREGARD PRINTS BEARING EARLIER REVISION DATES

REVISION DATES (PRELIMINARY STAGE ONLY) SHEET OF

FILE => T:\13103\MS\pse\OTD-Contract 1\CCO\CCO Service Platforms - Struc\34-0006-u-misodt06a.dgn

USERNAME => reyesl DATE PLOTTED => 5/22/2008 TIME PLOTTED => 4:42:45 PM

DIST	COUNTY	ROUTE	KILOMETER POST TOTAL PROJECT	SHEET NO	TOTAL SHEETS
04	Ala	80	1.6/2.7	346B R0	643

Gregory Benkovich 4/21/08
REGISTERED CIVIL ENGINEER

PLANS APPROVAL DATE

REGISTERED PROFESSIONAL ENGINEER Gregory Benkovich No. C40518 Exp. 3/31/09 CIVIL STATE OF CALIFORNIA

The State of California or its officers or agents shall not be responsible for the accuracy or completeness of electronic copies of this plan sheet.

Parsons Brinckerhoff Quade & Douglas, Inc.
303 Second Street, Suite 700N
San Francisco, CA 94107

Caltrans now has a web site! To get to the web site, go to: http://www.dot.ca.gov

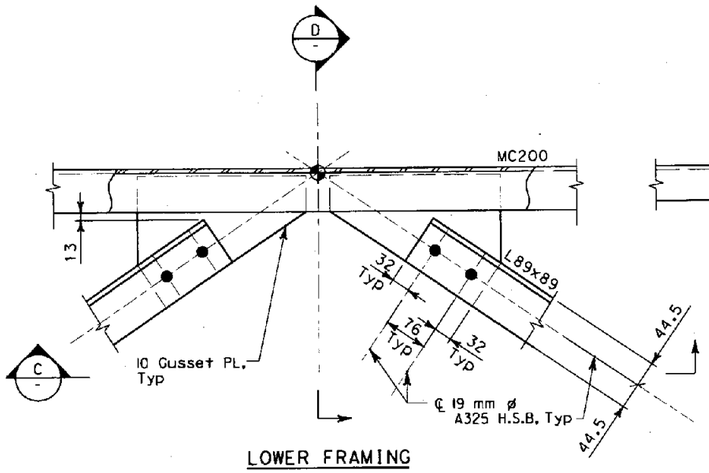

I 341R1 **DETAIL** SCALE: 1:5

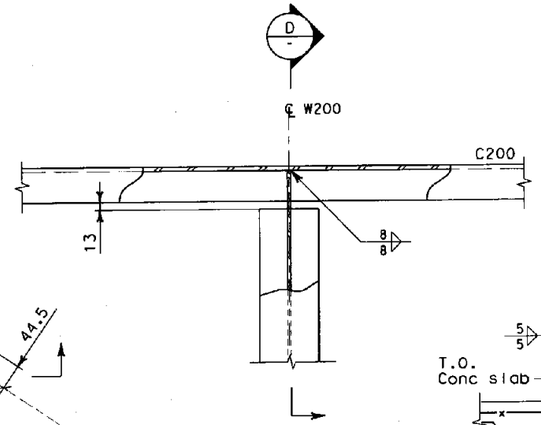

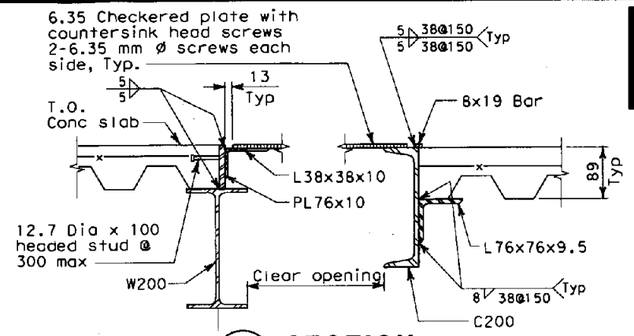

A 341R1 **SECTION** SCALE: 1:5

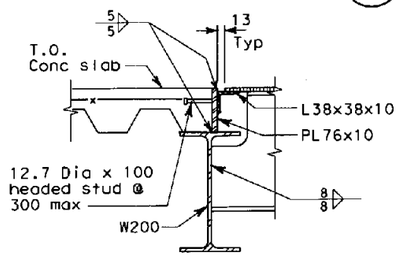

B 341R1 **SECTION** SCALE: 1:5

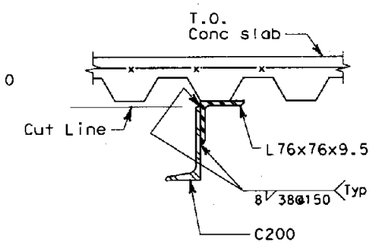

H - **SECTION** SCALE: 1:5

NOTES:

1. The contractor shall verify all controlling field dimensions before ordering or fabricating any material.
2. For locations of platform, see electrical sheets.
3. For structural notes, see "General Structural Notes" sheet 340R1.

MARK	DATE	DESCRIPTIONS	BY	CH'D	CCO#
		REVISIONS			

CONTRACT CHANGE ORDER NO. 57
SHEET 22 OF 25 04-0120L4

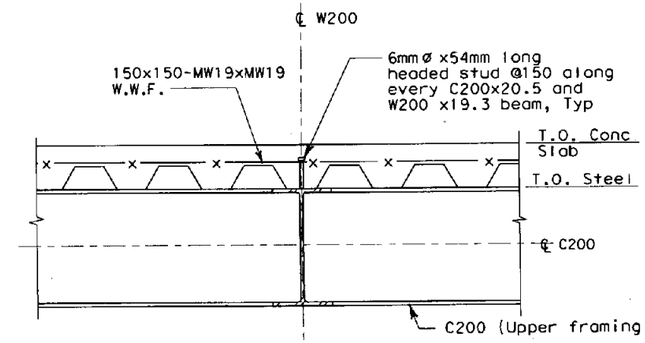

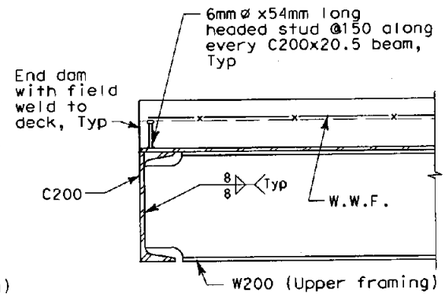

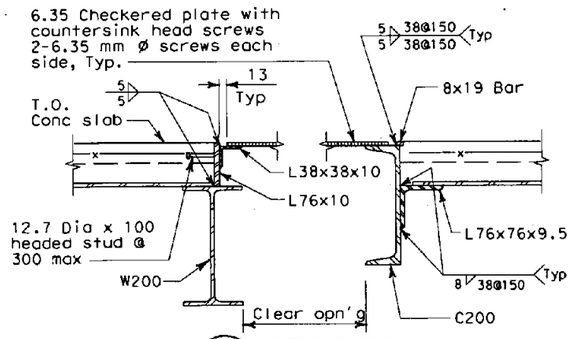

E 341R1 **SECTION** SCALE: 1:5

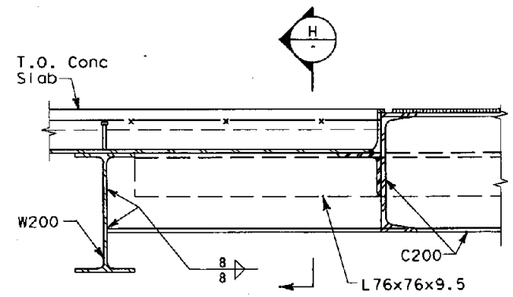

F - **SECTION** SCALE: 1:5

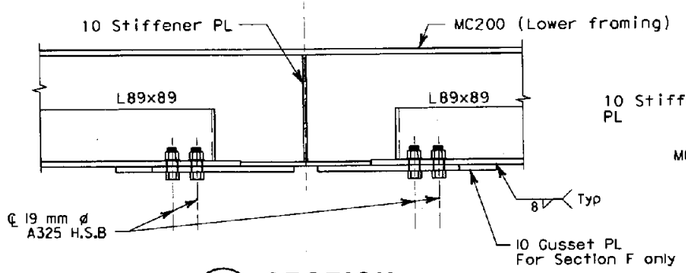

C - **SECTION** SCALE: 1:5

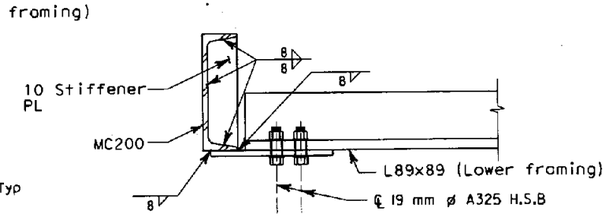

D - **SECTION** SCALE: 1:5

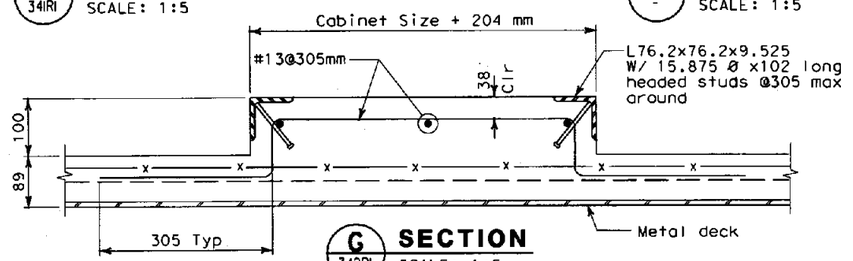

G 342R1 **SECTION** SCALE: 1:5

ALL DIMENSIONS ARE IN MILLIMETERS UNLESS OTHERWISE SHOWN

BERNARD CHAN
DESIGN OVERSIGHT
SIGN OFF DATE

	BY	CHECKED
DESIGN	G. Benkovich	M.S. Owyang
DETAILS	O. Kurnavskaya	G. Benkovich
QUANTITIES	G. Benkovich	M.S. Owyang

PREPARED FOR THE STATE OF CALIFORNIA DEPARTMENT OF TRANSPORTATION

Mark Grodzki
PROJECT ENGINEER

BRIDGE NO. 34-0006 L/R
KILOMETER POST 1.6

OAKLAND TOUCHDOWN
SERVICE PLATFORMS DETAILS AND SECTION (SHEET 3 OF 3)

DESIGN DETAIL SHEET (METRIC) REV. 3/1/98

ORIGINAL SCALE IN MILLIMETERS FOR REDUCED PLANS 0 10 20 30 40 50 60 70 80 90 100

CU 04251
EA 0120L1

DISREGARD PRINTS BEARING EARLIER REVISION DATES

REVISION DATES (PRELIMINARY STAGE ONLY) SHEET OF

FILE => T:\13103\MS\pse\OTD-Contract 1\CCO\CCO Service Platforms - Struc\34-0006-u-miscdt06b.dgn

USERNAME => reyesl DATE PLOTTED => 5/22/2008 TIME PLOTTED => 9:17:35 PM

DIST	COUNTY	ROUTE	KILOMETER POST TOTAL PROJECT	SHEET No	TOTAL SHEETS
04	Ala	80	1.6/2.7	346C RO	643

Gregory Benkovich 4/21/08
REGISTERED CIVIL ENGINEER

PLANS APPROVAL DATE

REGISTERED PROFESSIONAL ENGINEER Gregory Benkovich No. C40518 Exp. 3/31/09 CIVIL STATE OF CALIFORNIA

The State of California or its officers or agents shall not be responsible for the accuracy or completeness of electronic copies of this plan sheet.

Parsons Brinckerhoff Quade & Douglas, Inc.
303 Second Street, Suite 700N
San Francisco, CA 94107

Caltrans now has a web site! To get to the web site, go to: http://www.dot.ca.gov

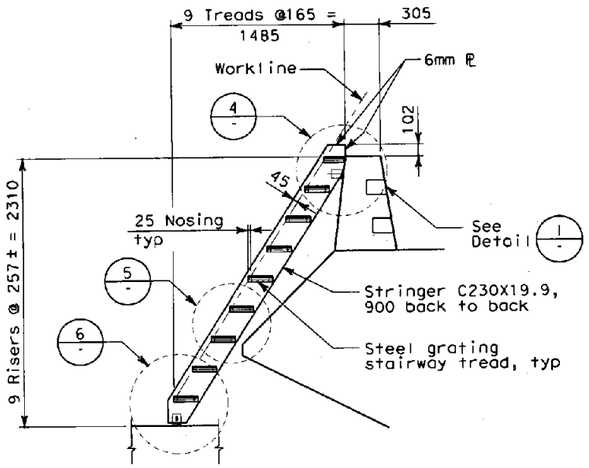

TYPICAL STAIR SECTION

A 342R1 SECTION
SCALE:1:25

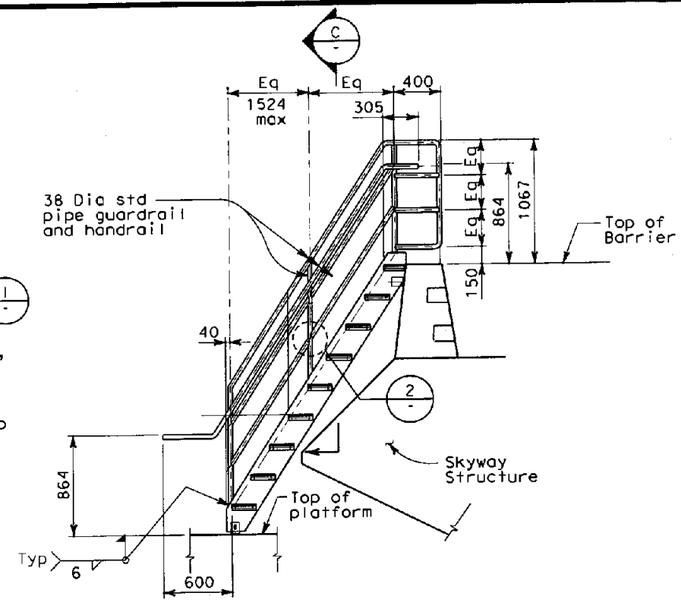

TYPICAL HANDRAIL ARRANGEMENT

B 342R1 SECTION
SCALE:1:25

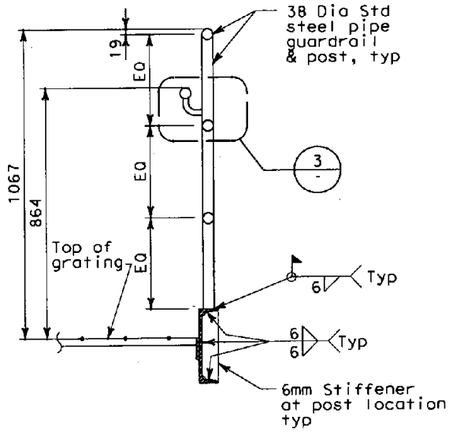

C - SECTION
SCALE:1:10

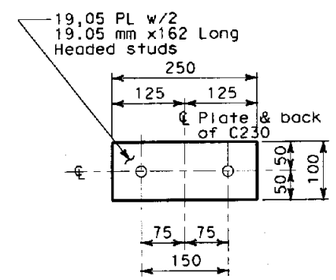

E - SECTION
SCALE: 1:5

NOTES:

1. The contractor shall verify all controlling field dimensions before ordering or fabricating any material.
2. For locations of platform, see electrical sheets.
3. For structural notes, see "General Plan Stairway" sheet 340R1.

MARK	DATE	DESCRIPTIONS	BY	CH'D	CCO#
		REVISIONS			

CONTRACT CHANGE ORDER NO. 57
SHEET 23 OF 25 04-012014

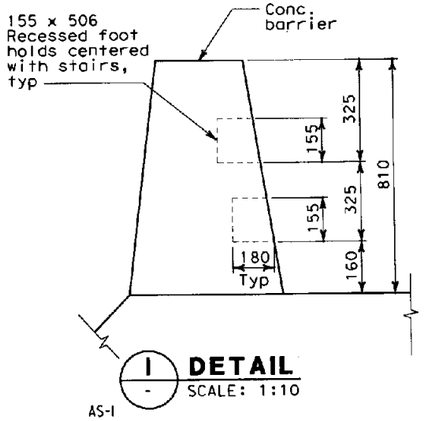

1 - DETAIL
SCALE: 1:10

AS-1

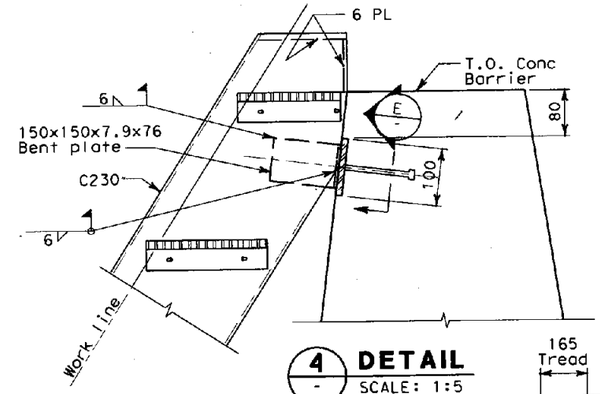

4 - DETAIL
SCALE: 1:5

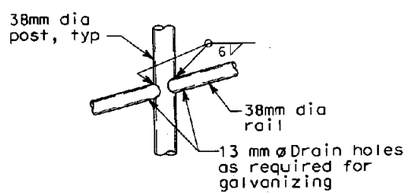

2 - DETAIL
SCALE: 1:5

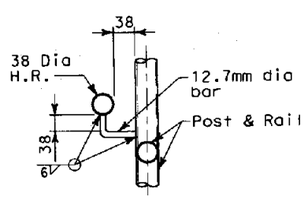

3 - DETAIL
SCALE: 1:5

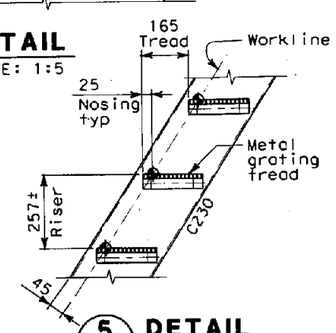

5 - DETAIL
SCALE: 1:10

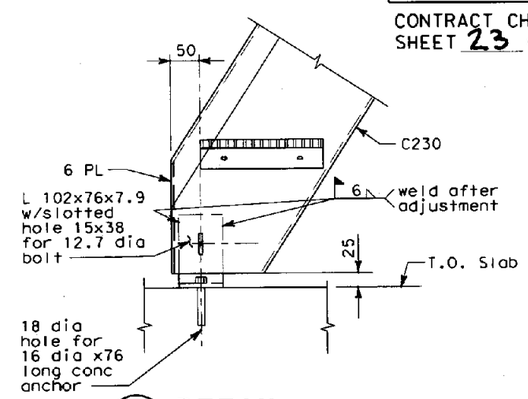

6 - DETAIL
SCALE: 1:5

ALL DIMENSIONS ARE IN MILLIMETERS UNLESS OTHERWISE SHOWN

BERNARD CHAN
DESIGN OVERSIGHT

SIGN OFF DATE

	BY	CHECKED
DESIGN	G. Benkovich	M.S. Owyang
DETAILS	O. Kurnovskaya	G. Benkovich
QUANTITIES	G. Benkovich	M.S. Owyang

PREPARED FOR THE STATE OF CALIFORNIA DEPARTMENT OF TRANSPORTATION

Mark Grodzki
PROJECT ENGINEER

BRIDGE NO. 34-0006 L/R
KILOMETER POST 1.6

OAKLAND TOUCHDOWN
SERVICE PLATFORMS LADDER DETAILS AND SECTIONS

CU 04251
EA 0120L1

DISREGARD PRINTS BEARING EARLIER REVISION DATES

REVISION DATES (PRELIMINARY STAGE ONLY)

SHEET ___ OF ___

DESIGN DETAIL SHEET (METRIC) (REV. 3/1/98)

ORIGINAL SCALE IN MILLIMETERS FOR REDUCED PLANS 0 10 20 30 40 50 60 70 80 90 100

FILE => T:\13103\MS\pse\OTD-Contract 1\CCO\CCO Service Platforms - Struc\34-0006-u-miscdt06c.dgn

USERNAME => reyesl DATE PLOTTED => 5/22/2008 TIME PLOTTED => 5:18:54 PM

DIST	COUNTY	ROUTE	KILOMETER POST TOTAL PROJECT	SHEET No	TOTAL SHEETS
04	Ala	80	1.6/2.7	346DR0	643

Caltrans Metric

Gregory Benkovich 4/21/08
REGISTERED CIVIL ENGINEER

PLANS APPROVAL DATE

REGISTERED PROFESSIONAL ENGINEER Gregory Benkovich No. C40518 Exp. 3/31/09 CIVIL STATE OF CALIFORNIA

The State of California or its officers or agents shall not be responsible for the accuracy or completeness of electronic copies of this plan sheet.

Parsons Brinckerhoff Quade & Douglas, Inc.
303 Second Street, Suite 700N
San Francisco, CA 94107

Caltrans now has a web site! To get to the web site, go to: http://www.dot.ca.gov

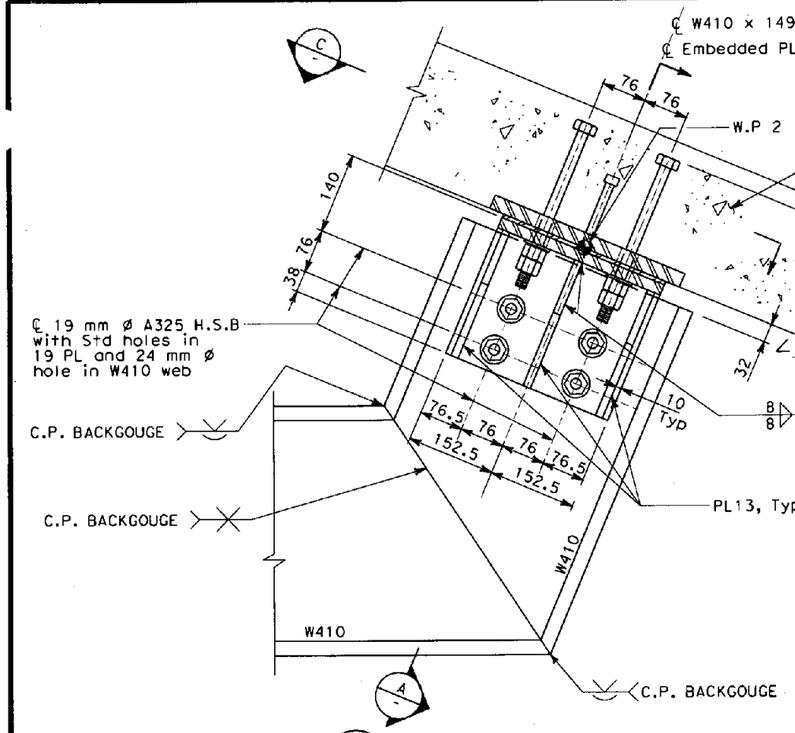

1 342R1 **DETAIL**
SCALE: 1:5

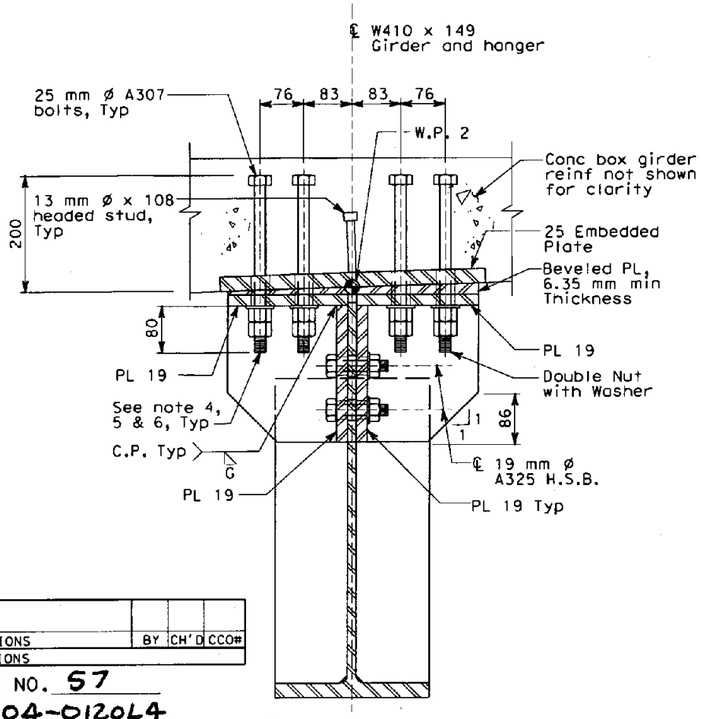

A - **SECTION**
SCALE: 1:5

MARK	DATE	DESCRIPTIONS	BY	CH'D	CCO#
		REVISIONS			

CONTRACT CHANGE ORDER NO. 57
SHEET 24 OF 25 04-012014

NOTES:

1. The contractor shall verify all controlling field dimensions before ordering or fabricating any material.
2. For locations of platform, see electrical sheets.
3. For structural notes, see "General Structural Notes" sheet 340R1
4. Before placing concrete, the contractor shall use temporary nut and 25 mm min thickness beveled plate to hold the 25 mm ø A307 bolts in place. The temporary nut shall be tightened to ensure the 25 mm ø A307 bolts will not move or rotate and remain in design position during concrete placing. Remove and discard temporary nut and plate before installation of hanger assembly.
5. Each 25 mm ø A307 bolt shall be tensioned to a force of 11±1 kN (2.5 kips/bolt).
6. After tightening nut, to achieve prescribed tension in reinforcing bars (see note 5) the contractor shall spoil the threads on the projection to prevent unintended loosening of the nuts.

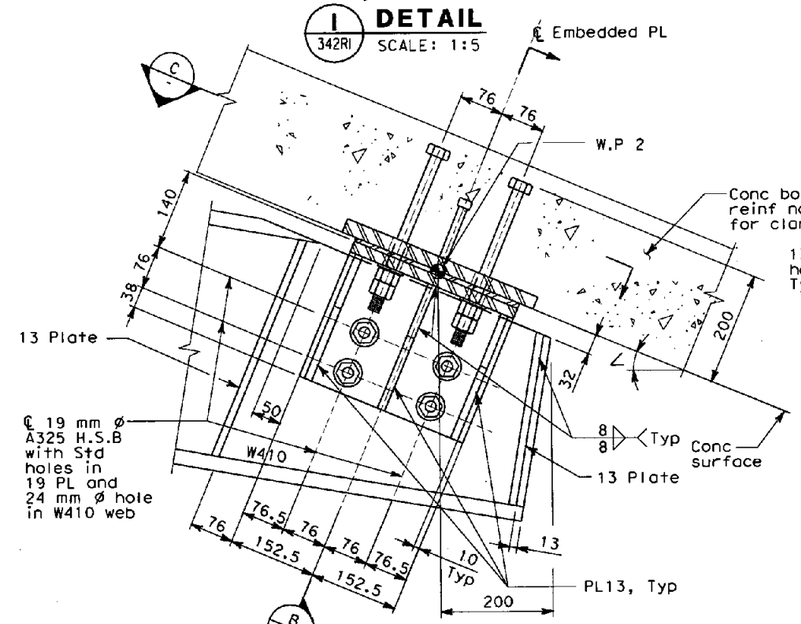

2 341R1 **DETAIL**
SCALE: 1:5

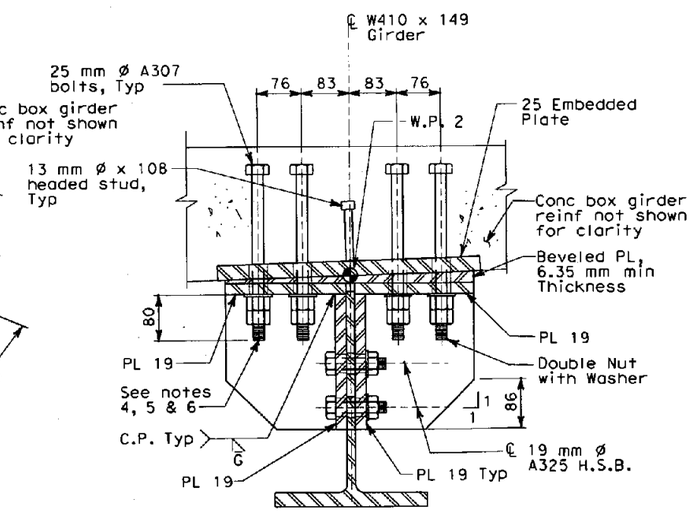

B - **SECTION**
SCALE: 1:5

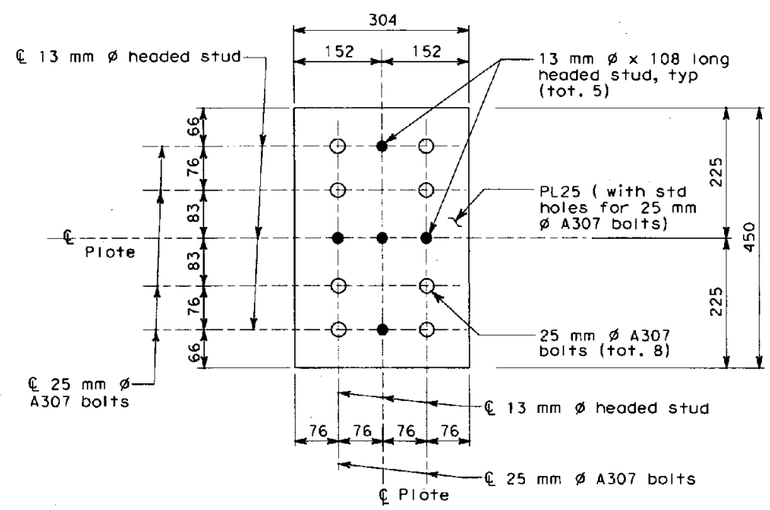

C - **SECTION**
SCALE: 1:5

ALL DIMENSIONS ARE IN MILLIMETERS UNLESS OTHERWISE SHOWN

BERNARD CHAN
DESIGN OVERSIGHT
SIGN OFF DATE

DESIGN DETAIL SHEET (METRIC) (REV. 3/1/98)

	BY	CHECKED	
DESIGN	G. Benkovich	M.S. Owyang	
DETAILS	O. Kurnovskaya	G. Benkovich	
QUANTITIES	G. Benkovich	M.S. Owyang	

ORIGINAL SCALE IN MILLIMETERS FOR REDUCED PLANS 0 10 20 30 40 50 60 70 80 90 100

PREPARED FOR THE STATE OF CALIFORNIA DEPARTMENT OF TRANSPORTATION

Mark Gradzki
PROJECT ENGINEER

BRIDGE NO. 34-0006 L/R
KILOMETER POST 1.6

CU 04251
EA 0120L1

DISREGARD PRINTS BEARING EARLIER REVISION DATES

OAKLAND TOUCHDOWN

SERVICE PLATFORMS DETAILS AND SECTIONS (SHEET 1 OF 2)

REVISION DATES (PRELIMINARY STAGE ONLY) SHEET OF

FILE => T:\13103\MS\pse\OTD-Contract 1\CCO\CCO Service Platforms - Struc\34-0006-u-miscdt06d.dgn

USERNAME => reyesl DATE PLOTTED => 5/22/2008 TIME PLOTTED => 5:20:22 PM

DIST	COUNTY	ROUTE	KILOMETER POST TOTAL PROJECT	SHEET NO	TOTAL SHEETS
04	Ala	80	1.6/2.7	346ER0	643

Gregory Benkovich 4/21/08
REGISTERED CIVIL ENGINEER

PLANS APPROVAL DATE

REGISTERED PROFESSIONAL ENGINEER Gregory Benkovich No. C40518 Exp. 3/31/09 CIVIL STATE OF CALIFORNIA

The State of California or its officers or agents shall not be responsible for the accuracy or completeness of electronic copies of this plan sheet.

Parsons Brinckerhoff Quade & Douglas, Inc.
303 Second Street, Suite 700N
San Francisco, CA 94107

Caltrans now has a web site! To get to the web site, go to: http://www.dot.ca.gov

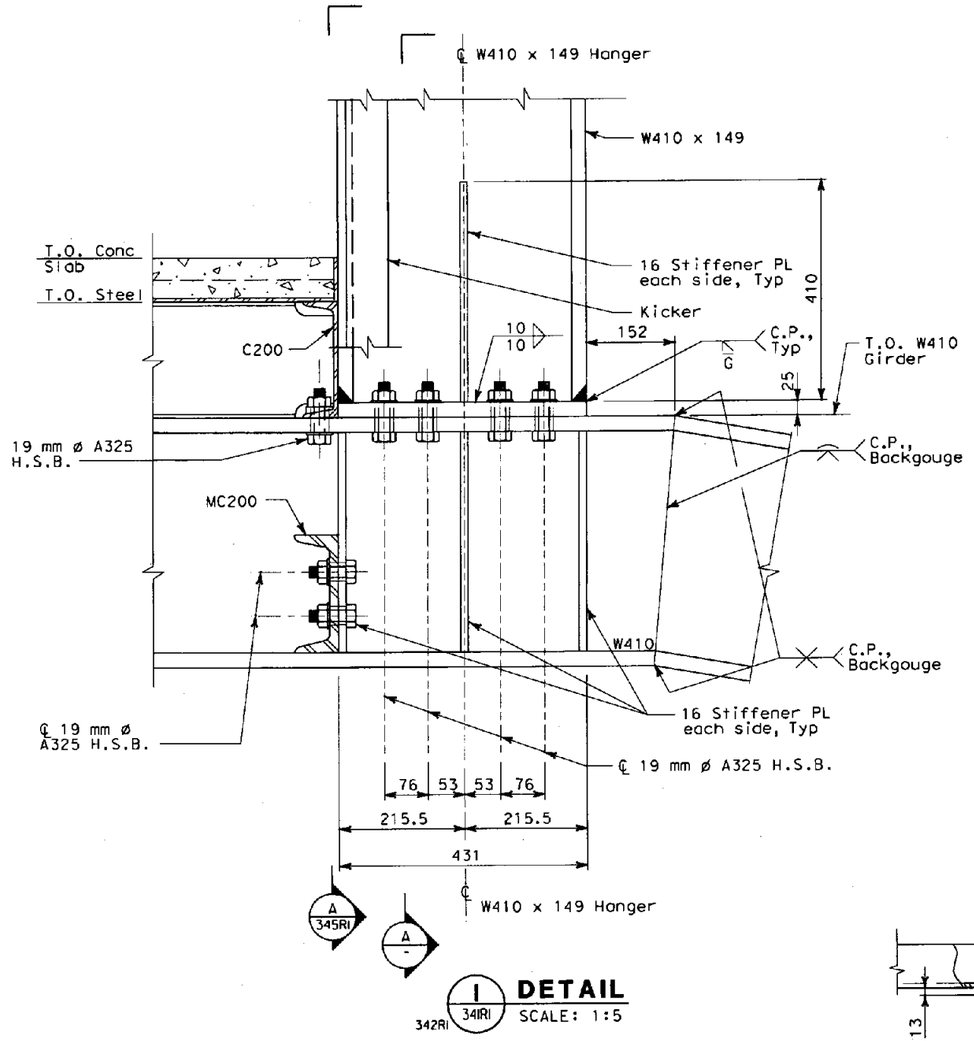

1 341R1 **DETAIL** 342R1
SCALE: 1:5

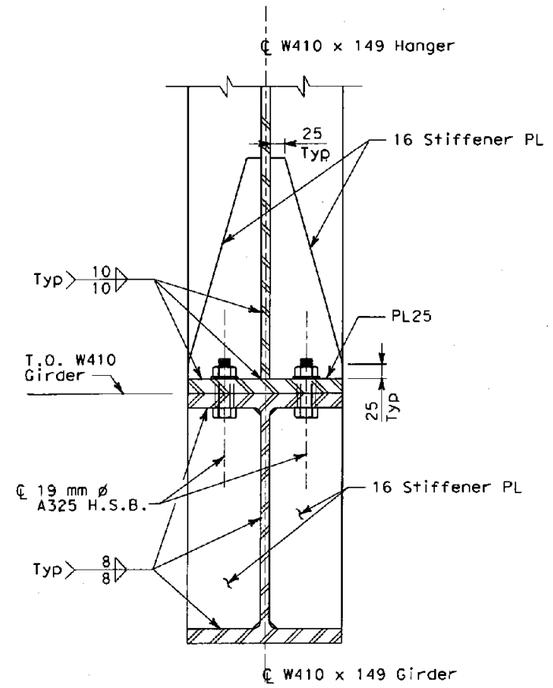

A - **SECTION**
SCALE: 1:5

NOTES:

1. The contractor shall verify all controlling field dimensions before ordering or fabricating any material.
2. For locations of platform, see electrical sheets.
3. For structural notes, see "General Structural Notes" sheet 340R1.

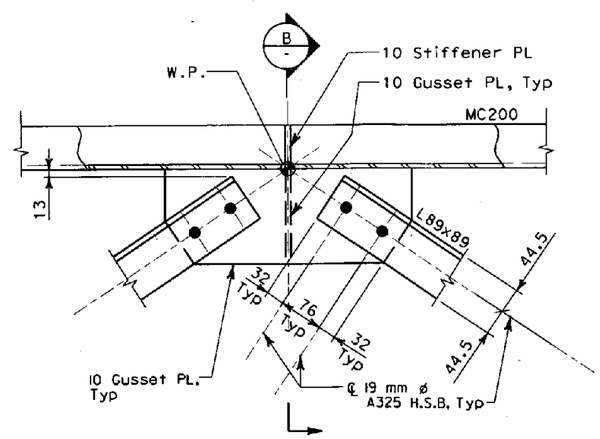

LOWER FRAMING

2 341R1 **DETAIL**
SCALE: 1:5

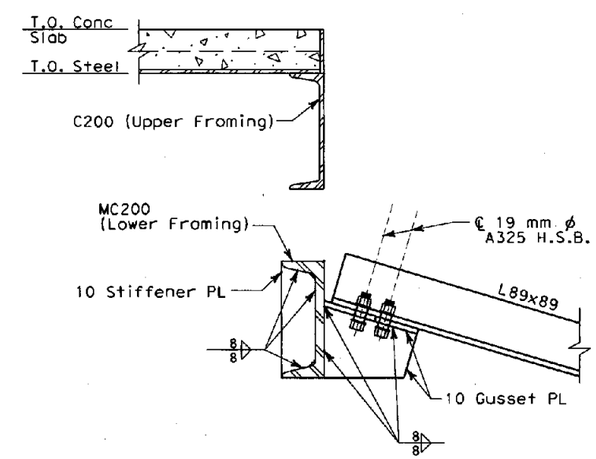

B - **SECTION**
SCALE: 1:5

ALL DIMENSIONS ARE IN MILLIMETERS UNLESS OTHERWISE SHOWN

△ **ORIGINAL SHEET SUPERSEEDED**

△ MARK	DATE	DESCRIPTIONS	BY	CH'D	CCO#
		REVISIONS			

CONTRACT CHANGE ORDER NO. 57
SHEET 25 OF 25 04-0120L4

BERNARD CHAN
DESIGN OVERSIGHT
SIGN OFF DATE

	BY	CHECKED
DESIGN	G. Benkovich	M.S. Owyang
DETAILS	O. Kurnovskoya	G. Benkovich
QUANTITIES	G. Benkovich	M.S. Owyang

PREPARED FOR THE STATE OF CALIFORNIA DEPARTMENT OF TRANSPORTATION

Mark Grodzki
PROJECT ENGINEER

BRIDGE NO. 34-0006 L/R
KILOMETER POST 1.6

OAKLAND TOUCHDOWN

SERVICE PLATFORMS DETAIL AND SECTIONS (SHEET 2 OF 2)

DESIGN DETAIL SHEET (METRIC) (REV. 3/1/98)

ORIGINAL SCALE IN MILLIMETERS FOR REDUCED PLANS 0 10 20 30 40 50 60 70 80 90 100

CU 04251
EA 0120L1

DISREGARD PRINTS BEARING EARLIER REVISION DATES

REVISION DATES (PRELIMINARY STAGE ONLY) SHEET OF

FILE => T:\13103\MS\pse\OTD-Contract 1\CCO\CCO Service Platforms - Struc\34-0006-u-miscdt06e.dgn

USERNAME => reyesi DATE PLOTTED => 5/22/2008 TIME PLOTTED => 5:20:45 PM

STATE OF CALIFORNIA - DEPARTMENT OF TRANSPORTATION

CONTRACT CHANGE ORDER MEMORANDUM

DATE: 6/2/2008

TO: AMER BATA / BEN GHAFGHAZI	FILE: E.A. 04 - 0120L4
FROM: BEN GHAFGHAZI	CO-RTE-PM ALA-80-1.6/2.7
	FED. NO. NO FED AID
CCO#: 57 SUPPLEMENT#: 0 Category Code: CHPT	CONTINGENCY BALANCE (incl. this change) $14,692,364.70
COST: $0.00 INCREASE ☐ DECREASE ☐	HEADQUARTERS APPROVAL REQUIRED? ☑ YES ☐ NO
SUPPLEMENTAL FUNDS PROVIDED: $0.00	IS THIS REQUEST IN ACCORDANCE WITH ENVIRONMENTAL DOCUMENTS? ☑ YES ☐ NO
CCO DESCRIPTION: Revisions to service platforms	**PROJECT DESCRIPTION:** Construct bridge, roadway, building and electrical system.

Original Contract Time:	Time Adj. This Change:	Previously Approved CCO Time Adjustments:	Percentage Time Adjusted: (including this change)	Total # of Unreconciled Deferred Time CCO(s): (including this change)
810 Day(s)	0 Day(s)	0 Day(s)	0 %	5

THIS CHANGE ORDER PROVIDES FOR:

Revising service platforms in accordance with specifications and plans on sheets 2 through 25 of this CCO.

This CCO was requested by Steve Hulsebus, Principal TE for Toll Bridge Design. This CCO is required to bring the service platforms on the Oakland Touch Down project into compliance with the service platforms previously installed on the Skyway project (04-012024).

This change has been discussed and concurred with Samad Hamoud, Office of Structures Design-West, Jaime Gutierrez, Project Development, Lina Ellis, Structures Maintenance, and Patrick Treacy, Headquarters Construction Coordinator. Ken Terpstra, Project Manager, concurs with this change. Issue and approve was granted by Headquarters on June 26, 2008.

A detailed cost analysis has been performed and is in the contract files. There shall be no cost associated with this CCO.

No adjustment of contract time is warranted since this change does not affect the controlling operation.

CONCURRED BY:

Construction Engineer:	Ben Ghafghazi	Date	7/13/09
Bridge Engineer:		Date	
Project Engineer:	Jaime Gutierrez	Date	5/20/08
Project Manager:	Ken Terprstra	Date	6/20/08
FHWA Rep.:		Date	
Environmental:		Date	
Other (specify):	Steve Hulsebus	Date	5/20/08
Other (specify):	Lina Ellis, Struct. Maintenance	Date	6/23/08
District Prior Approval By:		Date	
HQ (Issue Approve) By:	Ken Darby	Date	6/26/08
Resident Engineer's Signature:		Date	7/13/09

ESTIMATE OF COST

	THIS REQUEST	TOTAL TO DATE
ITEMS	$0.00	$0.00
FORCE ACCOUNT	$0.00	$0.00
AGREED PRICE	$0.00	$0.00
ADJUSTMENT	$0.00	$0.00
TOTAL	$0.00	$0.00

FEDERAL PARTICIPATION

☐ PARTICIPATING ☐ PARTICIPATING IN PART ☑ NONE
☐ NON-PARTICIPATING (MAINTENANCE) ☐ NON-PARTICIPATING

FEDERAL SEGREGATION (if more than one Funding Source or P.I.P. type)
☑ CCO FUNDED PER CONTRACT ☐ CCO FUNDED AS FOLLOWS

FEDERAL FUNDING SOURCE	PERCENT

ADA Notice: For individuals with sensory disabilities, this document is available in alternate formats. For information call: (916) 654-6410 or TDD (916) 654-3880 or write Records and Forms Management, 1120 N Street, MS-89, Sacramento, CA 95814.

CONTRACT CHANGE ORDER

Change Requested by: Engineer

CCO 58	Suppl. No. 0	Contract No. 04 - 0120L4	Road ALA-80-1.6/2.7	FED. AID LOC.: NO FED AID

To: **M C M CONSTRUCTION INC**

You are directed to make the following changes from the plans and specifications or do the following described work not included in the plans and specifications for this contract. ***NOTE: This change order is not effective until approved by the Engineer.***

Description of work to be done, estimate of quantities and prices to be paid. (Segregate between additional work at contract price, agreed price and force account.) Unless otherwise stated, rates for rental of equipment cover only such time as equipment is actually used and no allowance will be made for idle time. This last percentage shown is the net accumulated increase or decrease from the original quantity in the Engineer's Estimate.

Replace AC (Type A) and AC dike (Type F) removed during utility duct bank excavation for the portion of the duct bank within Caltrans SFOBB Maintenance yard. Provide an adjustment to Item No. 86: ASPHALT CONCRETE (TYPE A) in accordance with Section 4-1.03C, "Changes in Character of Work," of the Standard Specifications.

Estimate of Increase in Contract Item at Contract Price:

Item No. 86: ASPHALT CONCRETE (TYPE A)

277.6 TONN (+1.97%) $92.50 /TONN = +$25,678.00 (+1.97%)

Place AC (Type A) from 20 M west of Manhole 34 to Manhole 41 and from Manhole 41 to the Oakland Substation. Exact limits will be determined in the field.

Estimated total cost for Increase in Contract Item.....$25,678.00

Extra Work at Lump Sum:

Place 292 M of AC Dike (Type F) from 20 M west of Manhole 34 to Manhole 41. Exact limits will be determined in the field. AC Dike shall be placed in accordance with Caltrans Standard Plan A87B, Section 10-1.49, "Asphalt Concrete," of the Special Provisions and Section 39-7, "Miscellaneous," of the Standard Specifications.

Extra Work at Agreed Lump Sum $6,467.94

Adjustment of Compensation at Lump Sum:

Adjust Item No. 86: ASPHALT CONCRETE (TYPE A) to reflect actual cost of work in accordance with Section 4-1.03C, "Changes in Character of Work," of the Standard Specifications.

Adjustment of Compensation at Agreed Lump Sum $40,531.66

Estimated Cost: Increase ☑ **Decrease** ☐ **$72,677.60**

By reason of this order the time of completion will be adjusted as follows: 0 days

Submitted by		
Signature	Resident Engineer BEN GHAFGHAZI	Date 1/15/09
Approval Recommended by		
Signature	Construction Engineer Ben Ghafghazi	Date 1/15/09
Engineer Approval by		
Signature	Construction Manager Amer Bata	Date 1/15/09

We the undersigned contractor, have given careful consideration to the change proposed and agree, if this proposal is approved, that we will provide all equipment, furnish the materials, except as may otherwise be noted above, and perform all services necessary for the work above specified, and will accept as full payment therefor the prices shown above.

NOTE: If you, the contractor, do not sign acceptance of this order, your attention is directed to the requirements of the specifications as to proceeding with the ordered work and filing a written protest within the time therein specified.

Contractor Acceptance by		
Signature	(Print name and title) EDMUNDO A. PUCHI, TREASURER	Date 1/14/09

STATE OF CALIFORNIA - DEPARTMENT OF TRANSPORTATION

CONTRACT CHANGE ORDER MEMORANDUM

DATE: 6/13/2008 Page 1 of 1

TO: AMER BATA / BEN GHAFGHAZI	FILE: E.A. 04 - 0120L4
FROM: BEN GHAFGHAZI	CO-RTE-PM ALA-80-1.6/2.7
	FED. NO. NO FED AID
CCO#: 58 SUPPLEMENT#: 0 Category Code: CJPJ	CONTINGENCY BALANCE (incl. this change) $9,701,090.20
COST: $72,677.60 INCREASE ☑ DECREASE ☐	HEADQUARTERS APPROVAL REQUIRED? ☐ YES ☑ NO
SUPPLEMENTAL FUNDS PROVIDED: $0.00	IS THIS REQUEST IN ACCORDANCE WITH ENVIRONMENTAL DOCUMENTS? ☑ YES ☐ NO
CCO DESCRIPTION: Pave and place AC dike at CT maint yard	**PROJECT DESCRIPTION:** Construct bridge, roadway, building and electrical system.

Original Contract Time:	Time Adj. This Change:	Previously Approved CCO Time Adjustments:	Percentage Time Adjusted: (including this change)	Total # of Unreconciled Deferred Time CCO(s): (including this change)
810 Day(s)	0 Day(s)	178 Day(s)	22 %	4

THIS CHANGE ORDER PROVIDES FOR:

Replacing AC (Type A) and AC Dike (Type F) that was removed during utility duct bank excavation for the portion of the duct bank within Caltrans SFOBB Maintenance yard. Providing an adjustment to Item No. 86, ASPHALT CONCRETE (TYPE A), in accordance with Section 4-1.03C, "Changes in Character of Work," of the Standard Specifications.

This change is necessary to restore the parking and storage area for Caltrans' Maintenance. The layout of the duct bank required removal of paved areas within the Maintenance yard. These areas are used by Maintenance to park equipment and store materials. This has had significant impact to Maintenance operations at SFOBB. Replacing the AC and dike will allow Maintenance to use areas that were part of the yard originally. The contract plans do not show the duct bank being placed within paved areas and there is no provision in the contract for replacing the AC. Item No. 86 is being adjusted because the nature of the work has changed. The paving on this project is for roadway work with typical production on the order of 1,000T per shift. This paving is to cover a trench. The work area is confined and requires significant hand work. The item price does not cover all of the costs of this work due to the additional labor and reduced tonnage.

This CCO will be paid as extra work at agreed lump sum for AC Dike (Type F) for $6,467.94, an increase in Item No. 86, ASPHALT CONCRETE (TYPE A), of 277.6 TONN for $25,678.00, and an adjustment of compensation at agreed lump sum for additional work to place AC for $40,531.66. Total cost of this CCO is $72,677.60. A detailed cost analysis has been performed and is in the contract files.

This change has been discussed and concurred with Jaime Gutierrez of Project Development and Phil Harsono of Maintenance.

No adjustment of contract time is warranted since this change does not affect the controlling operation.

CONCURRED BY:

Construction Engineer:	Ben Ghafghazi	Date 1/5/09
Bridge Engineer:		Date
Project Engineer:	Jaime Gutierrez	Date 6/26/08
Project Manager:		Date
FHWA Rep.:		Date
Environmental:		Date
Other (specify):	Phil Harsono, Maintenance	Date 6/26/08
Other (specify):		Date
District Prior Approval By:		Date
HQ (Issue Approve) By:		Date
Resident Engineer's Signature:		Date 1/5/09

ESTIMATE OF COST

	THIS REQUEST	TOTAL TO DATE
ITEMS	$25,678.00	$25,678.00
FORCE ACCOUNT	$0.00	$0.00
AGREED PRICE	$6,467.94	$6,467.94
ADJUSTMENT	$40,531.66	$40,531.66
TOTAL	$72,677.60	$72,677.60

FEDERAL PARTICIPATION

☐ PARTICIPATING ☐ PARTICIPATING IN PART ☑ NONE
☐ NON-PARTICIPATING (MAINTENANCE) ☐ NON-PARTICIPATING

FEDERAL SEGREGATION (if more than one Funding Source or P.I.P. type)
☑ CCO FUNDED PER CONTRACT ☐ CCO FUNDED AS FOLLOWS

FEDERAL FUNDING SOURCE	PERCENT

ADA Notice: For individuals with sensory disabilities, this document is available in alternate formats. For information call: (916) 654-6410 or TDD (916) 654-3880 or write Records and Forms Management, 1120 N Street, MS-89, Sacramento, CA 95814.

CONTRACT CHANGE ORDER

Change Requested by: Engineer

CCO 59	Suppl. No. 0	Contract No. 04 - 0120L4	Road ALA-80-1.6/2.7	FED. AID LOC.: NO FED AID

M C M CONSTRUCTION INC

You are directed to make the following changes from the plans and specifications or do the following described work not included in the plans and specifications for this contract. ***NOTE: This change order is not effective until approved by the Engineer.***

Description of work to be done, estimate of quantities and prices to be paid. (Segregate between additional work at contract price, agreed price and force account.) Unless otherwise stated, rates for rental of equipment cover only such time as equipment is actually used and no allowance will be made for idle time. This last percentage shown is the net accumulated increase or decrease from the original quantity in the Engineer's Estimate.

Revise the bike path deck contours per sheets 2 of 3, and 3 of 3 of this CCO. The new sheets, 125R1 and 126R1, shall replace contract plan sheets 125 and 126 of 643.

There shall be no cost associated with this CCO.

Estimated Cost: **Increase** ☐ **Decrease** ☐ **$0.00**

By reason of this order the time of completion will be adjusted as follows: 0 days

Submitted by		
Signature	Resident Engineer BEN GHAFGHAZI	Date 6/20/08
Approval Recommended by		
Signature	Construction Engineer Ben Ghafghazi	Date 6/20/08
Engineer Approval by		
Signature	Construction Engineer Ben Ghafghazi	Date 7/14/08

We the undersigned contractor, have given careful consideration to the change proposed and agree, if this proposal is approved, that we will provide all equipment, furnish the materials, except as may otherwise be noted above, and perform all services necessary for the work above specified, and will accept as full payment therefor the prices shown above.

NOTE: If you, the contractor, do not sign acceptance of this order, your attention is directed to the requirements of the specifications as to proceeding with the ordered work and filing a written protest within the time therein specified.

Contractor Acceptance by		
Signature	(Print name and title) EDMUNDO A. PUCHI, TREASURER	Date 7/10/08

DIST.	COUNTY	ROUTE	KILOMETER POST TOTAL PROJECT	SHEET NO.	TOTAL SHEETS
04	Ala	80	1.6/2.7	125R1	643

REGISTERED ENGINEER - CIVIL

1-29-07
PLANS APPROVAL DATE

REGISTERED PROFESSIONAL ENGINEER MOHAN S. CHAR No. C057894 Exp. 6/30/08 CIVIL STATE OF CALIFORNIA

The State of California or its officers or agents shall not be responsible for the accuracy or completeness of electronic copies of this plan sheet.

T.Y. LIN / MOFFATT & NICHOL
TWO HARRISON STREET, SUITE 500
SAN FRANCISCO, CA 94105

LIM & NASCIMENTO ENGINEERING CORPORATION
12 MAUCHLY, BLDG L
IRVINE, CA 92618

To get to the Caltrans web site, go to: http://www.dot.ca.gov

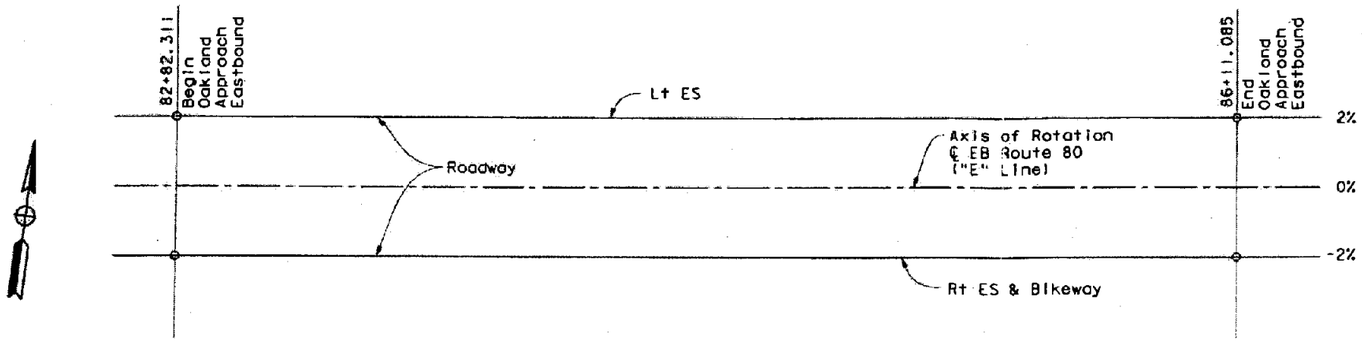

SUPERELEVATION DIAGRAM
No Scale

Note:
1. At Hinge EE, the contours on the Oakland side shall match the contours on the Skyway side.

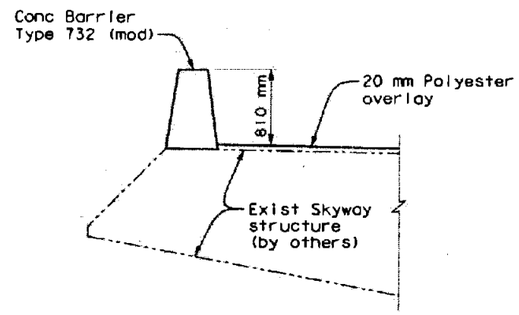

SECTION A-A
No Scale

Notes:
1. Contour interval at 0.05 meter.
2. Contours do not include camber.
3. x - indicates 5.00 meter interval along station line.
4. ☐ - indicates even meter contour.
5. Contours are for top of deck and top of Bikepath.

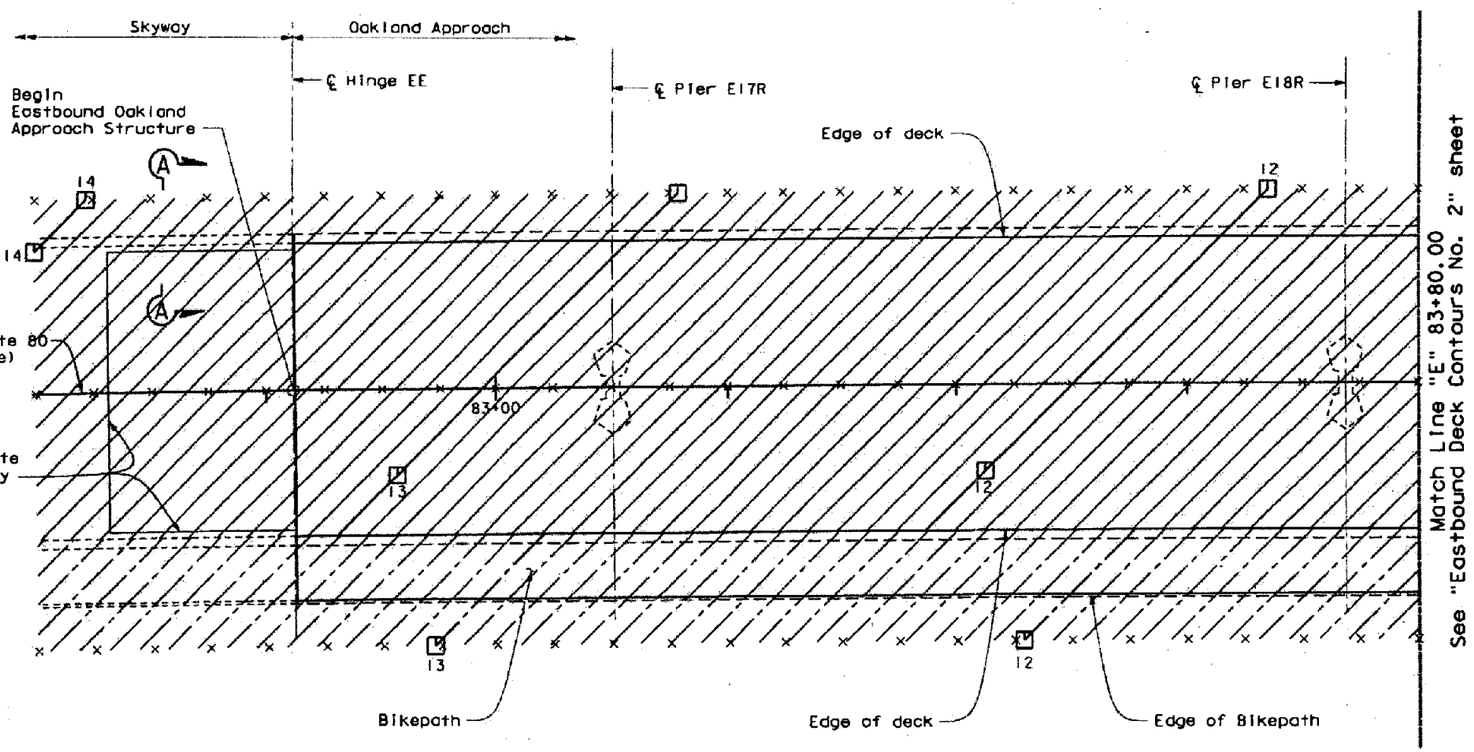

PARTIAL PLAN
1:250

LEGEND
- Deck Contour
- Bikepath contour

Note:
The Contractor shall verify all controlling field dimensions before ordering or fabricating any material.

ALL DIMENSIONS ARE IN MILLIMETERS UNLESS OTHERWISE SHOWN

STAMP IS VALID FOR REVISION 1 ONLY

MARK	DATE	REVISION(S)	BY	CH'D
1	5/07/08	REVISED DECK CONTOURS	MSC	TWD
		DESCRIPTIONS		

CONTRACT CHANGE ORDER NO. 59
SHEET 2 OF 3 04-0120L4

DESIGN OVERSIGHT
SAM AKRAD FRANCISCO CAMPIO BERNARD CHAN HASAN EL-NATUR
8-10-06
SIGN OFF DATE

	BY	CHECKED
DESIGN	M. CHAR	T. DUDLEY
DETAILS	N. MORCILLO/M. ANDRASEK	M. CHAR
QUANTITIES	N. MORCILLO/Y. KIM	V. SIVAKOLUNDU/T. DUDLEY

PREPARED FOR THE STATE OF CALIFORNIA DEPARTMENT OF TRANSPORTATION

MOHAN S. CHAR
PROJECT ENGINEER

BRIDGE NO. 34-0006L/R
KILOMETER POST 1.6

SAN FRANCISCO OAKLAND BAY BRIDGE
EAST SPAN SEISMIC SAFETY PROJECT

OAKLAND APPROACH STRUCTURES - PHASE I

EASTBOUND DECK CONTOURS NO. 1

Rev. Date: 5-10-06

ORIGINAL SCALE IN MILLIMETERS FOR REDUCED PLANS 0 10 20 30 40 50 60 70 80 90 100

CU 04
EA 0120L1

DISREGARD PRINTS BEARING EARLIER REVISION DATES

REVISION DATES (PRELIMINARY STAGE ONLY)

SHEET 12 OF 224

DIST.	COUNTY	ROUTE	KILOMETER POST TOTAL PROJECT	SHEET NO.	TOTAL SHEETS
04	Ala	80	1.6/2.7	126R1	643

REGISTERED ENGINEER - CIVIL

1-29-07
PLANS APPROVAL DATE

REGISTERED PROFESSIONAL ENGINEER MOHAN S. CHAR No. C057894 Exp. 6/30/10 CIVIL STATE OF CALIFORNIA

The State of California or its officers or agents shall not be responsible for the accuracy or completeness of electronic copies of this plan sheet.

T.Y. LIN / MOFFATT & NICHOL
TWO HARRISON STREET, SUITE 500
SAN FRANCISCO, CA 94105

LIM & NASCIMENTO ENGINEERING CORPORATION
12 MAUCHLY, BLDG L
IRVINE, CA 92618

To get to the Caltrans web site, go to: http://www.dot.ca.gov

LEGEND

Deck Contour

Bikepath contour

Notes:

1. Contour Interval at 0.05 meter.
2. Contours do not include camber.
3. x - Indicates 5.00 meter Interval along station line.
4. [1] - Indicates even meter contour.
5. Contours are for top of deck and top of Bikepath.

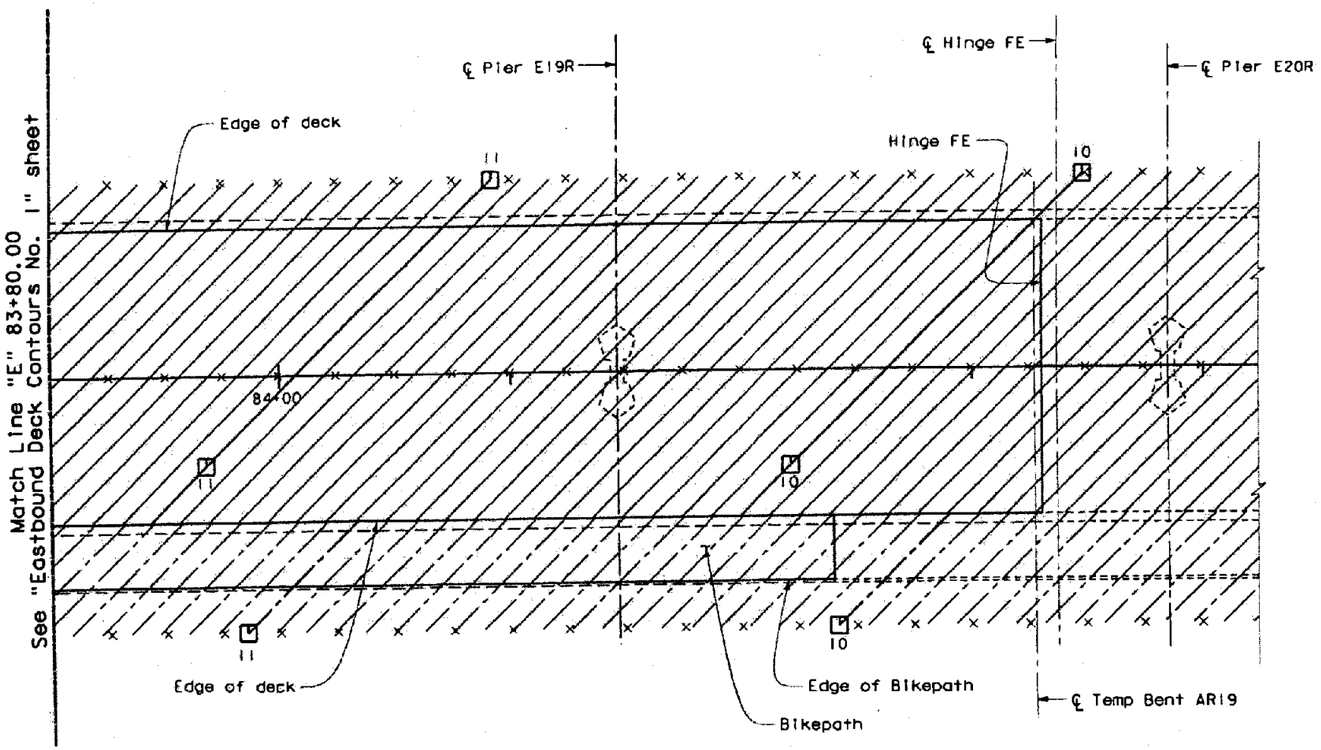

1

PARTIAL PLAN
1:250

REGISTERED PROFESSIONAL ENGINEER MOHAN S. CHAR No. C057894 Exp. 6/30/10 CIVIL STATE OF CALIFORNIA

STAMP IS VALID FOR REVISION 1 ONLY

MARK	DATE	REVISION(S)	BY	CH'D
1	5/07/08	REVISED DECK CONTOURS	MSC	TWD
		DESCRIPTIONS		

CONTRACT CHANGE ORDER NO. 59
SHEET 3 OF 3 04-0120L4

Note:
The Contractor shall verify all controlling field dimensions before ordering or fabricating any material.

ALL DIMENSIONS ARE IN MILLIMETERS UNLESS OTHERWISE SHOWN

DESIGN OVERSIGHT
SAM AKKAD FRANCISCO CARPIO BERNARD CHAN HASAN EL-NATUR
8-10-06
SIGN OFF DATE

	BY	CHECKED
DESIGN	M. CHAR	T. DUDLEY
DETAILS	N. MORCILLO/M. ANDRASEK	M. CHAR
QUANTITIES	N. MORCILLO/Y. KIM	V. SIVAKOLUNDU/T. DUDLEY

PREPARED FOR THE STATE OF CALIFORNIA DEPARTMENT OF TRANSPORTATION

MOHAN S. CHAR
PROJECT ENGINEER

BRIDGE NO. 34-0006L/R
KILOMETER POST 1.6

CU 04
EA 0120L1

SAN FRANCISCO OAKLAND BAY BRIDGE
EAST SPAN SEISMIC SAFETY PROJECT

OAKLAND APPROACH STRUCTURES - PHASE I

EASTBOUND DECK CONTOURS NO. 2

Rev. Date: 5-15-98

ORIGINAL SCALE IN MILLIMETERS FOR REDUCED PLANS 0 10 20 30 40 50 60 70 80 90 100

DISREGARD PRINTS BEARING EARLIER REVISION DATES

REVISION DATES SHALL IN DRAFT STAGE ONLY!

SHEET 13 OF 224

STATE OF CALIFORNIA - DEPARTMENT OF TRANSPORTATION

CONTRACT CHANGE ORDER MEMORANDUM

DATE: 6/20/2008 Page 1 of 1

TO: AMER BATA / BEN GHAFGHAZI	FILE: E.A. 04 - 0120L4
FROM: BEN GHAFGHAZI	CO-RTE-PM ALA-80-1.6/2.7
	FED. NO. NO FED AID
CCO#: 59 SUPPLEMENT#: 0 Category Code: CHPT	CONTINGENCY BALANCE (incl. this change) $14,692,364.70
COST: $0.00 INCREASE ☐ DECREASE ☐	HEADQUARTERS APPROVAL REQUIRED? ☐ YES ☑ NO
SUPPLEMENTAL FUNDS PROVIDED: $0.00	IS THIS REQUEST IN ACCORDANCE WITH ENVIRONMENTAL DOCUMENTS? ☑ YES ☐ NO
CCO DESCRIPTION: Revise bike path contours	**PROJECT DESCRIPTION:** Construct bridge, roadway, building and electrical system.

Original Contract Time:	Time Adj. This Change:	Previously Approved CCO Time Adjustments:	Percentage Time Adjusted: (including this change)	Total # of Unreconciled Deferred Time CCO(s): (including this change)
810 Day(s)	0 Day(s)	0 Day(s)	0 %	5

THIS CHANGE ORDER PROVIDES FOR:

Revising bike path deck contours on contract plan sheets 125 and 126 per sheets 2 of 3, and 3 of 3 of this CCO. The revised sheets 125R1 and 126R1 shall replace the original contract plans.

The bike path deck contours on the original plans do not match the bridge deck contours. In order to ensure that the grades of the bike path and bridge are consistent, the bike path contours will be revised to conform with the bridge deck.

This change has been discussed and concurred with Hasan El-Natur, Structures Design, and Jal Birdy, structure designer for Moffat and Nichol. Maintenance concurrence is not necessary since this CCO corrects the plan sheets to the original intention of the design.

There shall be no cost associated with this CCO.

No adjustment of contract time is warranted since this change does not affect the controlling operation.

CONCURRED BY:

Construction Engineer:	Ben Ghafghazi	Date 6/20/08
Bridge Engineer:	Mehran Ardakanian	Date
Project Engineer:	Hasan El-Natur, Structures Design	Date 5/20/08
Project Manager:		Date
FHWA Rep.:		Date
Environmental:		Date
Other (specify):	Jal Birdy, Moffat Nichol	Date 5/20/08
Other (specify):		Date
District Prior Approval By:		Date
HQ (Issue Approve) By:		Date
Resident Engineer's Signature:		Date 6/20/08

ESTIMATE OF COST

	THIS REQUEST	TOTAL TO DATE
ITEMS	$0.00	$0.00
FORCE ACCOUNT	$0.00	$0.00
AGREED PRICE	$0.00	$0.00
ADJUSTMENT	$0.00	$0.00
TOTAL	$0.00	$0.00

FEDERAL PARTICIPATION

☐ PARTICIPATING ☐ PARTICIPATING IN PART ☑ NONE
☐ NON-PARTICIPATING (MAINTENANCE) ☐ NON-PARTICIPATING

FEDERAL SEGREGATION (if more than one Funding Source or P.I.P. type)
☑ CCO FUNDED PER CONTRACT ☐ CCO FUNDED AS FOLLOWS

FEDERAL FUNDING SOURCE	PERCENT

ADA Notice: For individuals with sensory disabilities, this document is available in alternate formats. For information call: (916) 654-6410 or TDD (916) 654-3880 or write Records and Forms Management, 1120 N Street, MS-89, Sacramento, CA 95814.

STATE OF CALIFORNIA - DEPARTMENT OF TRANSPORTATION

CONTRACT CHANGE ORDER

Change Requested by: Engineer

CCO: 60	Suppl. No. 0	Contract No. 04 - 0120L4	Road ALA-80-1.6/2.7	FED. AID LOC.: NO FED AID

M C M CONSTRUCTION INC

You are directed to make the following changes from the plans and specifications or do the following described work not included in the plans and specifications for this contract. ***NOTE: This change order is not effective until approved by the Engineer.***

Description of work to be done, estimate of quantities and prices to be paid. (Segregate between additional work at contract price, agreed price and force account.) Unless otherwise stated, rates for rental of equipment cover only such time as equipment is actually used and no allowance will be made for idle time. This last percentage shown is the net accumulated increase or decrease from the original quantity in the Engineer's Estimate.

Extra Work at Force Account:

As determined by the Engineer, provide labor, equipment, and materials necessary to revise conduit layout for utility duct bank tie in at Manholes #1 and #2 at the Oakland Substation as shown on sheet 2 of 2 of this CCO.

Estimated cost of Extra Work at Force Account $25,000.00

Estimated Cost: Increase ☑ Decrease ☐ **$25,000.00**

By reason of this order the time of completion will be adjusted as follows: 0 days

Submitted by

Signature	Resident Engineer BEN GHAFGHAZI	Date 6/25/08

Approval Recommended by

Signature	Construction Engineer Ben Ghafghazi	Date 6/25/08

Engineer Approval by

Signature	Construction Engineer Ben Ghafghazi	Date 7/14/08

We the undersigned contractor, have given careful consideration to the change proposed and agree, if this proposal is approved, that we will provide all equipm furnish the materials, except as may otherwise be noted above, and perform all services necessary for the work above specified, and will accept as full paymer therefor the prices shown above.

NOTE: If you, the contractor, do not sign acceptance of this order, your attention is directed to the requirements of the specifications as to proceeding with the ordered work and filing a written protest within the time therein specified.

Contractor Acceptance by

Signature	(Print name and title) EDMUNDO A. PUCHI, TREASURER	Date 7/10/08

DIST	COUNTY	ROUTE	KILOMETER POST TOTAL PROJECT	SHEET No	TOTAL SHEETS
04	Ala	80	1.6/2.7	463	643

REGISTERED ELECTRICAL ENGINEER 05/15/06 DATE

1-29-07
PLANS APPROVAL DATE

REGISTERED PROFESSIONAL ENGINEER JENS ERLINGSSON No. 8249 Exp. 9/30/08 ELECTRICAL STATE OF CALIFORNIA

PB POWER, Inc.
A Parsons Brinckerhoff Company
303 Second St., Suite 700N
San Francisco, CA 94107-1317

The State of California or its officers or agents shall not be responsible for the accuracy or completeness of electronic copies of this plan sheet.

To get to the Caltrans web site, go to: http://www.dot.ca.gov

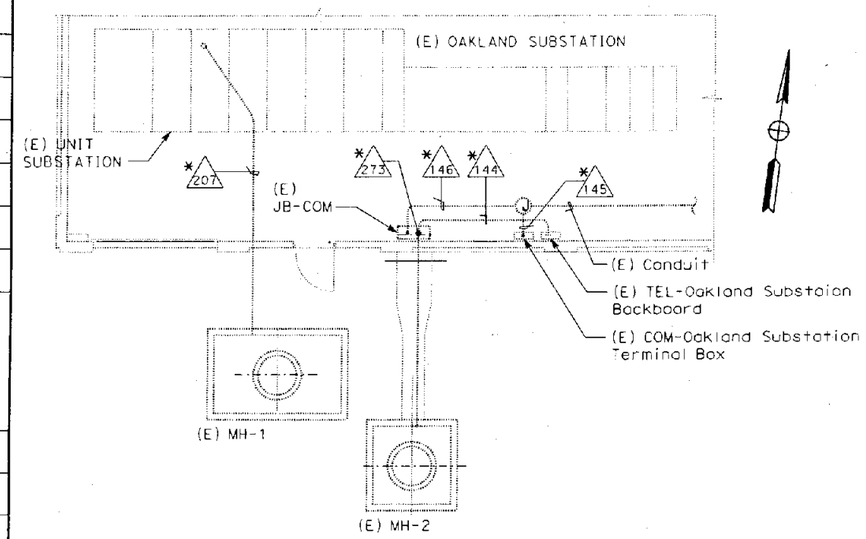

PLAN - DETAIL 1

CONDUIT ROUTING INTERFACE TO (E) OAKLAND SUBSTATION

NO SCALE

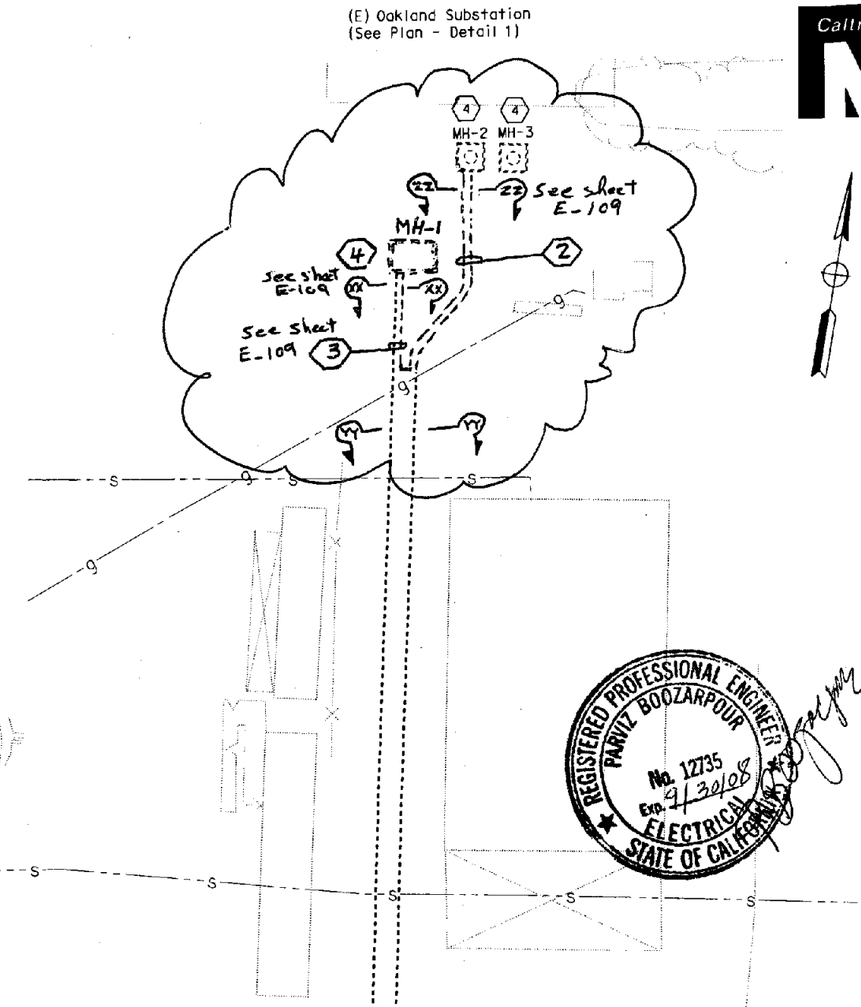

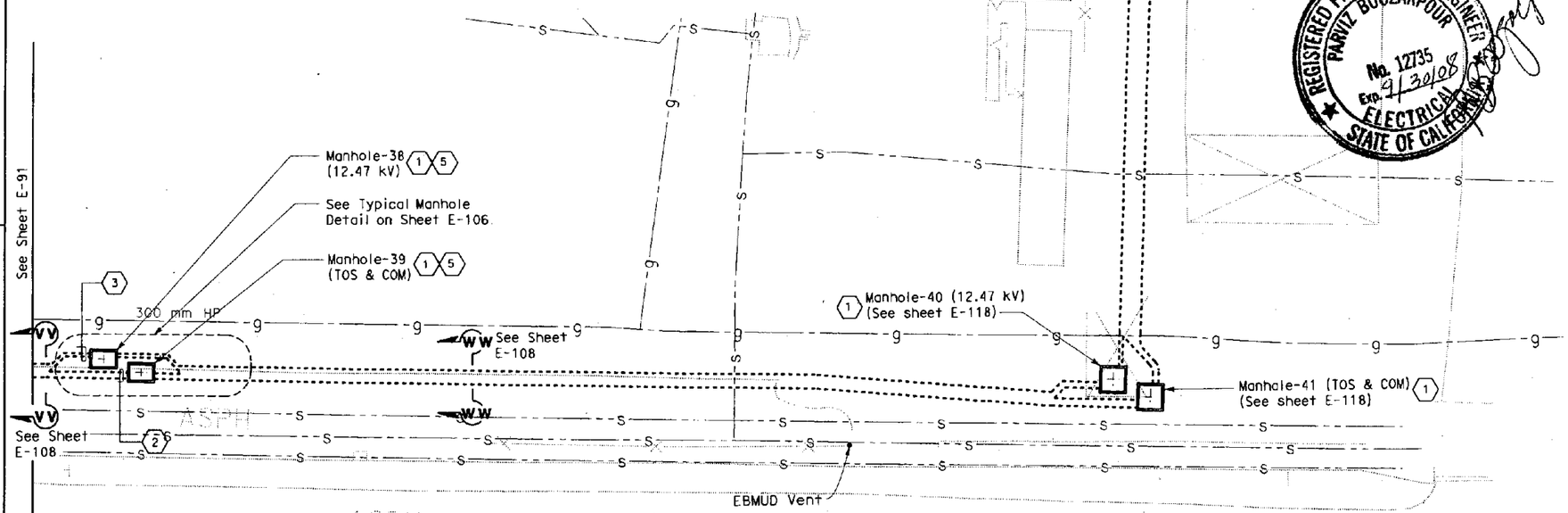

NOTES:

1. References:
   - For manhole plans and sections, see sheets starting at E-111.
   - For duct bank sections, see sheets starting at E-107.
   - For typical manhole and duct bank details, see sheet E-119.
2. Contractor shall verify all existing installations prior to proceeding with new installation.
3. Contractor shall verify exact location of existing gas and sewer outfall lines. For coordinates of manholes and top of duct bank, see utility plans and duct bank profile.
4. For existing utilities, see sheets starting at E-182 and see Utility Plans.
5. (*) Existing conduits.

SHEET NOTES:

(1) Contractor shall install manholes and duct banks no closer than the minimum distance from the existing sewer and gas lines. See sheet E-106 for minimum distance.

(2) All TOS/COM system underground conduits shall be 103 mm RGS conduit.

(3) All 12.47 kV underground conduits shall be 103 mm RGS conduit.

(4) (NIC) Manholes MH-1, MH-2 and MH-3 installed by others.

(5) See manhole plans and sections on sheet E-117.

REGISTERED PROFESSIONAL ENGINEER PARVIZ BOOZARPOUR No. 12735 Exp. 9/30/08 ELECTRICAL STATE OF CALIFORNIA

Contract No. 04-0120L4
Page 2 of 2
CCO No. 60 Suppl. No.
Contractor MCM
Res. Engr. B. Ghafghazi

PLAN
SCALE 1:200

ALL DIMENSIONS ARE IN METERS UNLESS OTHERWISE SHOWN

UNDERGROUND AND ROADWAY AT-GRADE
(LIGHTING AND ELECTRICAL SYSTEMS)

SCALE AS NOTED

E-92

THIS PLAN ACCURATE FOR ELECTRICAL WORK ONLY.

STATE OF CALIFORNIA - DEPARTMENT OF TRANSPORTATION
Caltrans

DESIGN OVERSIGHT: BEHZAD GOLEMOHAMMADI

CALCULATED/DESIGNED BY: FK DATE 2/06 REVISED BY
CHECKED BY: AB 2/06 DATE REVISED

LAST REVISION 00-00-00 DATE PLOTTED => 06-FEB-2007 TIME PLOTTED => 13:03

FOR REDUCED PLANS ORIGINAL SCALE IS IN MILLIMETERS 0 20 40 60 80

DGN FILE =>40120lua092.dgn
USERNAME =>trpierce

CU 04251 EA 0120L1

STATE OF CALIFORNIA - DEPARTMENT OF TRANSPORTATION

CONTRACT CHANGE ORDER MEMORANDUM

DATE: 6/20/2008 Page 1 of 1

TO: AMER BATA / BEN GHAFGHAZI

FROM: BEN GHAFGHAZI

FILE: **E.A.** 04 - 0120L4
CO-RTE-PM ALA-80-1.6/2.7
FED. NO. NO FED AID

CCO#: **60** | SUPPLEMENT#: **0** | Category Code: **CBPC**

CONTINGENCY BALANCE (incl. this change) **$14,667,364.70**

COST: **$25,000.00** INCREASE ☑ DECREASE ☐

HEADQUARTERS APPROVAL REQUIRED? ☐ YES ☑ NO

SUPPLEMENTAL FUNDS PROVIDED: **$0.00**

IS THIS REQUEST IN ACCORDANCE WITH ENVIRONMENTAL DOCUMENTS? ☐ YES ☑ NO

CCO DESCRIPTION:
Revise duct bank at Oakland Substation

PROJECT DESCRIPTION:
Construct bridge, roadway, building and electrical system.

Original Contract Time:	Time Adj. This Change:	Previously Approved CCO Time Adjustments:	Percentage Time Adjusted: (including this change)	Total # of Unreconciled Deferred Time CCO(s): (including this change)
810 Day(s)	0 Day(s)	0 Day(s)	0 %	5

THIS CHANGE ORDER PROVIDES FOR:
Revising conduit layout for utility duct bank tie in at Manholes #1 and #2 installed on contract 04-014034 at the Oakland Substation as shown on sheet 2 of 2 of the CCO.

This change is necessary because contract 04-014034 revised the location of Manholes #1 and #2 from the original contract plans. This was done to avoid existing utilities that were not shown on the plans. As a result the duct bank layout on this contract must be revised to conform to the manholes.

Payment for this work will be at Extra Work at Force Account for an estimated cost of $25,000, which can be financed from the contingency fund.

This change was discussed and concurred with Jaime Gutierrez, Project Development, Parviz Boozarpour, Electrical Design, and Rene Forteleza, Electrical Maintenance.

No adjustment of contract time is warranted since this change does not affect the controlling operation.

CONCURRED BY:

Construction Engineer:	Ben Ghafghazi	Date 6/25/08
Bridge Engineer:		Date
Project Engineer:	Jaime Gutierrez	Date 6/25/08
Project Manager:		Date
FHWA Rep.:		Date
Environmental:		Date
Other (specify):	Parviz Boozarpour, Elec. Design	Date 6/5/08
Other (specify):	Rene Forteleza, Elec. Maintenance	Date 6/24/08
District Prior Approval By:		Date
HO (Issue Approve) By:		Date
Resident Engineer's Signature:		Date 6/25/08

ESTIMATE OF COST

	THIS REQUEST	TOTAL TO DATE
ITEMS	$0.00	$0.00
FORCE ACCOUNT	$25,000.00	$25,000.00
AGREED PRICE	$0.00	$0.00
ADJUSTMENT	$0.00	$0.00
TOTAL	$25,000.00	$25,000.00

FEDERAL PARTICIPATION

☐ PARTICIPATING ☐ PARTICIPATING IN PART ☑ NONE
☐ NON-PARTICIPATING (MAINTENANCE) ☐ NON-PARTICIPATING

FEDERAL SEGREGATION (if more than one Funding Source or P.I.P. type)
☑ CCO FUNDED PER CONTRACT ☐ CCO FUNDED AS FOLLOWS

FEDERAL FUNDING SOURCE PERCENT

ADA Notice: For individuals with sensory disabilities, this document is available in alternate formats. For information call (916) 654-6410 or TDD (916) 654-3880 or write Records and Forms Management, 1120 N Street, MS-89, Sacramento, CA 95814

STATE OF CALIFORNIA - DEPARTMENT OF TRANSPORTATION

CONTRACT CHANGE ORDER

Change Requested by: Engineer

CCO 61	Suppl. No. 0	Contract No. 04 - 0120L4	Road ALA-80-1.6/2.7	FED. AID LOC.: NO FED AID

To: **M C M CONSTRUCTION INC**

You are directed to make the following changes from the plans and specifications or do the following described work not included in the plans and specifications for this contract. ***NOTE: This change order is not effective until approved by the Engineer.***

Description of work to be done, estimate of quantities and prices to be paid. (Segregate between additional work at contract price, agreed price and force account.) Unless otherwise stated, rates for rental of equipment cover only such time as equipment is actually used and no allowance will be made for idle time. This last percentage shown is the net accumulated increase or decrease from the original quantity in the Engineer's Estimate.

Extra Work at Force Account:

Where directed by the Engineer and in accordance with the procedures outlined below, release jacks and re-jack the temporary tower at hinge EW & EE on the Skyway structure as follows:

1. Release jacks at the Skyway tower to zero jacking force for a period of 3 days and monitor the deck elevation daily (to the nearest mm), jack Skyway Cantilever back to its original elevation at the end of 3rd day.
2. Jacks shall be released and lowered gradually at a controlled rate.
3. Jacks on north and south web lines shall be lowered simultaneously so that no torsion is induced in the Skyway Structure.
4. Existing lateral support of the Skyway Cantilever tip shall remain effective at all times.
5. After jacking the Skyway structure up to its original position, monitor the jacks reactions and record the data on a biweekly basis until final engagement between the Skyway and Oakland Touchdown structures is achieved.
6. Submit a detailed plan for lowering and raising the Skyway Cantilever to the Engineer for approval at least two weeks prior to the start of work. The plan shall include the following:
   a) The stepwise lowering and raising of the Skyway, using an increment of 25mm or less at each step.
   b) For each increment, the method of measuring survey elevations and rotations along the Skyway Cantilever.
   c) For each increment, the method of measuring and recording the jack reactions.

The work shall be paid as Extra Work at Force Account in accordance with Section 5-1.26 Force Account Payment of the Contract Special Provisions and Section 4-1.03D Extra Work of the Standard Specifications.

No time adjustment in contract time due to this change order.

Estimated cost of Extra Work at Force Account $30,000.00

Estimated Cost: **Increase** ☑ **Decrease** ☐ **$30,000.00**

By reason of this order the time of completion will be adjusted as follows: 0 days

Submitted by		
Signature	**Resident Engineer** BEN GHAFGHAZI	**Date** 7/17/08
Approval Recommended by		
Signature	**Construction ~~Engineer~~** Manager ~~Ben Ghafghazi~~ Amer Bata	**Date** 7/30/08
Engineer Approval by		
Signature	**Construction Manager** Amer Bata	**Date** 8/15/08

We the undersigned contractor, have given careful consideration to the change proposed and agree, if this proposal is approved, that we will provide all equipment, furnish the materials, except as may otherwise be noted above, and perform all services necessary for the work above specified, and will accept as full payment therefor the prices shown above.

NOTE: If you, the contractor, do not sign acceptance of this order, your attention is directed to the requirements of the specifications as to proceeding with the ordered work and filing a written protest within the time therein specified.

Contractor Acceptance by		
Signature	**(Print name and title)** EDMUNDO A. PUCHI, TREASURER	**Date** 8/4/08

STATE OF CALIFORNIA - DEPARTMENT OF TRANSPORTATION

CONTRACT CHANGE ORDER MEMORANDUM

DATE: 7/7/2008 Page 1 of 1

TO: AMER BATA / BEN GHAFGHAZI	FILE: E.A. 04 - 0120L4
FROM: BEN GHAFGHAZI	CO-RTE-PM ALA-80-1.6/2.7
	FED. NO. NO FED AID
CCO#: 61 SUPPLEMENT#: 0 Category Code: CHTX	CONTINGENCY BALANCE (incl. this change) $12,408,864.20
COST: $30,000.00 INCREASE ☑ DECREASE ☐	HEADQUARTERS APPROVAL REQUIRED? ☐ YES ☑ NO
SUPPLEMENTAL FUNDS PROVIDED: $0.00	IS THIS REQUEST IN ACCORDANCE WITH ENVIRONMENTAL DOCUMENTS? ☑ YES ☐ NO
CCO DESCRIPTION: Jacking Procedure at Skyway Temp. Tower	**PROJECT DESCRIPTION:** Construct bridge, roadway, building and electrical system.

Original Contract Time:	Time Adj. This Change:	Previously Approved CCO Time Adjustments:	Percentage Time Adjusted: (including this change)	Total # of Unreconciled Deferred Time CCO(s): (including this change)
810 Day(s)	0 Day(s)	0 Day(s)	0 %	6

THIS CHANGE ORDER PROVIDES FOR:

Releasing jacks and re-jack the temporary tower at Hinges EW & EE on the existing Skyway structures as directed by the Engineer.

The east end of the Skyway structures are cantilever sections that are currently resting on a set of temporary towers. As a part of this contract the towers are to be removed and the Oakland Touch Down and Skyway will be tied together. A camber diagram of the tie in was calculated by Design based on theoretical elevation of the Skyway. Design has requested that the jacks on the temporary tower be released and the actual elevation of the Skyway be measured. The camber diagram will then be adjusted accordingly. This work has been requested to be performed before the Oakland Touch Down tie in is constructed to determine if there are any effects of creep over time that will affect the final elevation. With this information any modifications to Oakland Touch Down can be made before falsework is erected.

Payment for this work will be at Extra Work at Force Account for an estimated cost of $30,000.00 which can be financed from the contingency fund.

This work has been discussed and concurred with Hasan El-Natur of Structures Design and Jal Birdy structure designer for Moffat and Nichol.

No adjustment of contract time is warranted since this change does not affect the controlling operation.

CONCURRED BY:			
Construction Engineer:	Ben Ghafghazi	Date	8/26/08
Bridge Engineer:	Mehran Ardakanian	Date	8/26/08
Project Engineer:		Date	
Project Manager:		Date	
FHWA Rep.:		Date	
Environmental:		Date	
Other (specify):	Hasan El-Natur, Structures Design	Date	7/3/08
Other (specify):	Jal Birdy, Moffat Nichol	Date	7/3/08
District Prior Approval By:		Date	
HQ (Issue Approve) By:		Date	
Resident Engineer's Signature:		Date	8/26/08

ESTIMATE OF COST

	THIS REQUEST	TOTAL TO DATE
ITEMS	$0.00	$0.00
FORCE ACCOUNT	$30,000.00	$30,000.00
AGREED PRICE	$0.00	$0.00
ADJUSTMENT	$0.00	$0.00
TOTAL	$30,000.00	$30,000.00

FEDERAL PARTICIPATION

☐ PARTICIPATING ☐ PARTICIPATING IN PART ☑ NONE
☐ NON-PARTICIPATING (MAINTENANCE) ☐ NON-PARTICIPATING

FEDERAL SEGREGATION (if more than one Funding Source or P.I.P. type)
☑ CCO FUNDED PER CONTRACT ☐ CCO FUNDED AS FOLLOWS

FEDERAL FUNDING SOURCE PERCENT

ADA Notice: For individuals with sensory disabilities, this document is available in alternate formats. For information call: (916) 654-6410 or TDD (916) 654-3880 or write Records and Forms Management, 1120 N Street, MS-89, Sacramento, CA 95814.

STATE OF CALIFORNIA - DEPARTMENT OF TRANSPORTATION

CONTRACT CHANGE ORDER MEMORANDUM

DATE: 11/14/2008 Page 1 of 1

TO: AMER BATA / BEN GHAFGHAZI	FILE: E.A. 04 - 0120L4
FROM: BEN GHAFGHAZI	CO-RTE-PM ALA-80-1.6/2.7
	FED. NO. NO FED AID
CCO#: 61 SUPPLEMENT#: 1 Category Code: CHTX	CONTINGENCY BALANCE (incl. this change) $13,325,988.20
COST: $30,000.00 INCREASE ☑ DECREASE ☐	HEADQUARTERS APPROVAL REQUIRED? ☐ YES ☑ NO
SUPPLEMENTAL FUNDS PROVIDED: $0.00	IS THIS REQUEST IN ACCORDANCE WITH ENVIRONMENTAL DOCUMENTS? ☑ YES ☐ NO
CCO DESCRIPTION: Jacking Procedure at Skyway Temp. Tower	**PROJECT DESCRIPTION:** Construct bridge, roadway, building and electrical system.

Original Contract Time:	Time Adj. This Change:	Previously Approved CCO Time Adjustments:	Percentage Time Adjusted: (including this change)	Total # of Unreconciled Deferred Time CCO(s): (including this change)
810 Day(s)	0 Day(s)	2 Day(s)	0 %	7

THIS CHANGE ORDER PROVIDES FOR:

Monitoring reaction forces at Hinges EE and EW at the Skyway temporary tower with a load cell unit with data logger until the pipe beam is installed. This is in lieu of lowering and re-jacking of the Skyway Structure every 2 weeks to monitor the reaction as specified in CCO #61 Supplement No. 0, Item #5.

By installing the load cell and data logger the reaction can be monitored continuously without releasing and jacking the Skyway structure. This will alleviate costs and enhance overall safety of this operation by eliminating the jacking operation. Furthermore, the reaction forces can be read whenever this information is needed instead of once every two weeks. This will provide more accurate data to the designers should any modifications need to be made to the Oakland Touch Down structures.

Payment for this work will be at Extra Work at Force Account for an estimated cost of $30,000.00 which can be financed from the contingency fund.

This work has been discussed and concurred with Hasan El-Natur of Structures Design and Jal Birdy structure designer for Moffat and Nichol. Maintenance concurrence is not required because the work of this CCO is temporary.

No adjustment of contract time is warranted since this change does not affect the controlling operation.

CONCURRED BY:

Construction Engineer:	Ben Ghafghazi	Date 11/26/07
Bridge Engineer:	Mehran Ardakanian	Date 11/26/08
Project Engineer:	Hasan El-Natur, Structures Design	Date 11/21/08
Project Manager:		Date
FHWA Rep.:		Date
Environmental:		Date
Other (specify):	Jal Birdy, Moffat Nichol	Date 11/21/08
Other (specify):		Date
District Prior Approval By:		Date
HQ (Issue Approve) By:		Date
Resident Engineer's Signature:		Date 11/26/07

ESTIMATE OF COST

	THIS REQUEST	TOTAL TO DATE
ITEMS	$0.00	$0.00
FORCE ACCOUNT	$30,000.00	$60,000.00
AGREED PRICE	$0.00	$0.00
ADJUSTMENT	$0.00	$0.00
TOTAL	$30,000.00	$60,000.00

FEDERAL PARTICIPATION

☐ PARTICIPATING ☐ PARTICIPATING IN PART ☑ NONE
☐ NON-PARTICIPATING (MAINTENANCE) ☐ NON-PARTICIPATING

FEDERAL SEGREGATION (if more than one Funding Source or P.I.P. type)
☑ CCO FUNDED PER CONTRACT ☐ CCO FUNDED AS FOLLOWS

FEDERAL FUNDING SOURCE	PERCENT

ADA Notice: For individuals with sensory disabilities, this document is available in alternate formats. For information call: (916) 654-6410 or TDD (916) 654-3880 or write Records and Forms Management, 1120 N Street, MS-89, Sacramento, CA 95814.

STATE OF CALIFORNIA - DEPARTMENT OF TRANSPORTATION

CONTRACT CHANGE ORDER

Change Requested by: Engineer

CCO 61	Suppl. No. 1	Contract No. 04 - 0120L4	Road ALA-80-1.6/2.7	FED. AID LOC.: NO FED AID

M C M CONSTRUCTION INC

You are directed to make the following changes from the plans and specifications or do the following described work not included in the plans and specifications for this contract. ***NOTE: This change order is not effective until approved by the Engineer.***

Description of work to be done, estimate of quantities and prices to be paid. (Segregate between additional work at contract price, agreed price and force account.) Unless otherwise stated, rates for rental of equipment cover only such time as equipment is actually used and no allowance will be made for idle time. This last percentage shown is the net accumulated increase or decrease from the original quantity in the Engineer's Estimate.

Extra Work at Force Account:

Monitor reaction forces at Hinges EE and EW at the Skyway temp tower using a load cell, as approved by the Engineer, until the pipe beam is installed. This shall be in lieu of Item #5 on CCO #61 Supplement No. 0, which required the lowering and re-jacking of the Skyway Structure every 2 weeks to monitor reaction forces.

Estimated cost of Extra Work at Force Account $30,000.00

Estimated Cost: Increase ☑ **Decrease** ☐ **$30,000.00**

By reason of this order the time of completion will be adjusted as follows: 0 days

Submitted by

Signature	Resident Engineer BEN GHAFGHAZI	Date 11/26/08

Approval Recommended by

Signature	Construction Engineer Ben Ghafghazi	Date 11/26/08

Engineer Approval by

Signature	Construction Manager Amer Bata	Date 12/12/08

We the undersigned contractor, have given careful consideration to the change proposed and agree, if this proposal is approved, that we will provide all equipment, furnish the materials, except as may otherwise be noted above, and perform all services necessary for the work above specified, and will accept as full payment therefor the prices shown above.

NOTE: If you, the contractor, do not sign acceptance of this order, your attention is directed to the requirements of the specifications as to proceeding with the ordered work and filing a written protest within the time therein specified.

Contractor Acceptance by

Signature	(Print name and title) EDMUNDO A. PUCHI, TREASURER	Date 12/5/08

STATE OF CALIFORNIA - DEPARTMENT OF TRANSPORTATION

CONTRACT CHANGE ORDER MEMORANDUM

DATE: 2/18/2009 Page 1 of 1

TO: AMER BATA / BEN GHAFGHAZI	FILE: E.A. 04 - 0120L4
FROM: BEN GHAFGHAZI	CO-RTE-PM ALA-80-1.6/2.7
	FED. NO. NO FED AID
CCO#: 61 SUPPLEMENT#: 2 Category Code: CHTX	CONTINGENCY BALANCE (incl. this change) $8,974,207.20
COST: $30,000.00 INCREASE ☑ DECREASE ☐	HEADQUARTERS APPROVAL REQUIRED? ☐ YES ☑ NO
SUPPLEMENTAL FUNDS PROVIDED: $0.00	IS THIS REQUEST IN ACCORDANCE WITH ENVIRONMENTAL DOCUMENTS? ☑ YES ☐ NO
CCO DESCRIPTION: Jacking Procedure at Skyway Temp. Tower	**PROJECT DESCRIPTION:** Construct bridge, roadway, building and electrical system.

Original Contract Time:	Time Adj. This Change:	Previously Approved CCO Time Adjustments:	Percentage Time Adjusted: (including this change)	Total # of Unreconciled Deferred Time CCO(s): (including this change)
810 Day(s)	0 Day(s)	184 Day(s)	23 %	5

THIS CHANGE ORDER PROVIDES FOR:

Additional funding to monitor deck elevations and reaction forces on existing Skyway structure per CCO No. 61 and CCO No. 61 Supplement 1.

This change is necessary to determine actual elevation of the existing Skyway structure prior to placing falsework which allows modifications to Oakland Touch Down to be made prior to erecting falsework. CCO No. 61 specified the procedure for determining the existing Skyway structure elevations. CCO No. 61 Supplement 1 specified the procedure for monitoring reaction forces. This supplement is to provide additional funds for this work.

Payment for this work will be at Extra Work at Force Account for an estimated cost of $30,000.00 which can be financed from the contingency fund.

Design and Maintenance concurrence is not necessary because this CCO is for additional funds only and new work is not being added.

No adjustment of contract time is warranted since this change does not affect the controlling operation.

CONCURRED BY: William Hall	
Construction Engineer: for Ben Ghafghazi WBH	Date 2·26·09
Bridge Engineer: Mehran Ardakanian Mehran Ardakanian	Date 2.26.09
Project Engineer:	Date
Project Manager:	Date
FHWA Rep.:	Date
Environmental:	Date
Other (specify):	Date
Other (specify):	Date
District Prior Approval By:	Date
HQ (Issue Approve) By:	Date
Resident Engineer's Signature:	Date 3/9/09

ESTIMATE OF COST

	THIS REQUEST	TOTAL TO DATE
ITEMS	$0.00	$0.00
FORCE ACCOUNT	$30,000.00	$90,000.00
AGREED PRICE	$0.00	$0.00
ADJUSTMENT	$0.00	$0.00
TOTAL	$30,000.00	$90,000.00

FEDERAL PARTICIPATION

☐ PARTICIPATING ☐ PARTICIPATING IN PART ☑ NONE
☐ NON-PARTICIPATING (MAINTENANCE) ☐ NON-PARTICIPATING

FEDERAL SEGREGATION (if more than one Funding Source or P.I.P. type)
☑ CCO FUNDED PER CONTRACT ☐ CCO FUNDED AS FOLLOWS

FEDERAL FUNDING SOURCE	PERCENT

ADA Notice: For individuals with sensory disabilities, this document is available in alternate formats. For information call: (916) 654-6410 or TDD (916) 654-3880 or write Records and Forms Management, 1120 N Street, MS-89, Sacramento, CA 95814.

STATE OF CALIFORNIA - DEPARTMENT OF TRANSPORTATION

CONTRACT CHANGE ORDER

Change Requested by: Engineer

CCO 61	Suppl. No. 2	Contract No. 04 - 0120L4	Road ALA-80-1.6/2.7	FED. AID LOC.: NO FED AID

M C M CONSTRUCTION INC

You are directed to make the following changes from the plans and specifications or do the following described work not included in the plans and specifications for this contract. ***NOTE: This change order is not effective until approved by the Engineer.***

Description of work to be done, estimate of quantities and prices to be paid. (Segregate between additional work at contract price, agreed price and force account.) Unless otherwise stated, rates for rental of equipment cover only such time as equipment is actually used and no allowance will be made for idle time. This last percentage shown is the net accumulated increase or decrease from the original quantity in the Engineer's Estimate.

Extra Work at Force Account:

Additional funding for monitoring deck elevations and reaction forces on existing Skyway structure per CCO No. 61 and CCO No. 61 Supplement 1.

Estimated cost of Extra Work at Force Account $30,000.00

Estimated Cost: Increase ☑ **Decrease** ☐ **$30,000.00**

By reason of this order the time of completion will be adjusted as follows: 0 days

Submitted by

Signature	Resident Engineer	Date
William Howe	FOR BEN GHAFGHAZI	2·26·09

Approval Recommended by

Signature	Construction Engineer	Date
William Howe	FOR Ben Ghafghazi	2·26·09

Engineer Approval by

Signature	Construction Manager	Date
[illegible]	Amer Bata	3/9/09

We the undersigned contractor, have given careful consideration to the change proposed and agree, if this proposal is approved, that we will provide all equipment, furnish the materials, except as may otherwise be noted above, and perform all services necessary for the work above specified, and will accept as full payment therefor the prices shown above.

NOTE: If you, the contractor, do not sign acceptance of this order, your attention is directed to the requirements of the specifications as to proceeding with the ordered work and filing a written protest within the time therein specified.

Contractor Acceptance by

Signature	(Print name and title)	Date
[illegible]	EDMUNDO A. PUCHI, TREASURER	3/4/09

STATE OF CALIFORNIA - DEPARTMENT OF TRANSPORTATION

CONTRACT CHANGE ORDER MEMORANDUM

DATE: 5/29/2009 Page 1 of 1

TO: AMER BATA / BEN GHAFGHAZI	FILE: E.A. 04 - 0120L4
FROM: BEN GHAFGHAZI	CO-RTE-PM ALA-80-1.6/2.7
	FED. NO. NO FED AID
CCO#: 61 SUPPLEMENT#: 3 Category Code: CHTX	CONTINGENCY BALANCE (incl. this change): $6,953,230.20
COST: $50,000.00 INCREASE ☑ DECREASE ☐	HEADQUARTERS APPROVAL REQUIRED? ☐ YES ☑ NO
SUPPLEMENTAL FUNDS PROVIDED: $0.00	IS THIS REQUEST IN ACCORDANCE WITH ENVIRONMENTAL DOCUMENTS? ☑ YES ☐ NO
CCO DESCRIPTION: Additional jacking Hinge EE.	**PROJECT DESCRIPTION:** Construct bridge, roadway, building and electrical system.

Original Contract Time:	Time Adj. This Change:	Previously Approved CCO Time Adjustments:	Percentage Time Adjusted: (including this change)	Total # of Unreconciled Deferred Time CCO(s): (including this change)
810 Day(s)	0 Day(s)	184 Day(s)	23 %	10

THIS CHANGE ORDER PROVIDES FOR:

Additional releasing of jacks and re-jacking the temporary tower at Hinge EE on the existing Skyway structure as directed by the Engineer. Procedure shall be as outlined in CCO No. 61 except that jacks will be released for 7 days in lieu of 3 days.

This change is necessary to provide additional information to Design regarding the deck elevations and reaction forces on the eastbound Skyway structure. The calculated elevations and deflections of the Skyway structure will be compared with actual elevations and deflections to ensure that Skyway and Oakland Touch Down structures align properly.

This work will be paid as Extra Work at Force Account for $50,000.00, which can be financed from the contingency fund.

This work has been requested by Hasan El-Natur of Structures Design and Jal Birdy structure designer for Moffat and Nichol. Maintenance concurrence is not required because the work of this CCO is temporary.

No adjustment of contract time is warranted since this change does not affect the controlling operation.

CONCURRED BY:			
Construction Engineer:	Ben Ghafghazi	Date	6/1/09
Bridge Engineer:	Mehran Ardakanian	Date	6/1/09
Project Engineer:	Hasan El-Natur, Structures Design	Date	5/27/09
Project Manager:		Date	
FHWA Rep.:		Date	
Environmental:		Date	
Other (specify):	Jal Birdy, Moffat Nichol	Date	5/27/09
Other (specify):		Date	
District Prior Approval By:		Date	
HQ (Issue Approve) By:		Date	
Resident Engineer's Signature:		Date	6/1/09

ESTIMATE OF COST

	THIS REQUEST	TOTAL TO DATE
ITEMS	$0.00	$0.00
FORCE ACCOUNT	$50,000.00	$140,000.00
AGREED PRICE	$0.00	$0.00
ADJUSTMENT	$0.00	$0.00
TOTAL	$50,000.00	$140,000.00

FEDERAL PARTICIPATION

☐ PARTICIPATING ☐ PARTICIPATING IN PART ☑ NONE
☐ NON-PARTICIPATING (MAINTENANCE) ☐ NON-PARTICIPATING

FEDERAL SEGREGATION (if more than one Funding Source or P.I.P. type)
☑ CCO FUNDED PER CONTRACT ☐ CCO FUNDED AS FOLLOWS

FEDERAL FUNDING SOURCE	PERCENT

ADA Notice: For individuals with sensory disabilities, this document is available in alternate formats. For information call: (916) 654-6410 or TDD (916) 654-3880 or write Records and Forms Management, 1120 N Street, MS-89, Sacramento, CA 95814.

STATE OF CALIFORNIA - DEPARTMENT OF TRANSPORTATION

CONTRACT CHANGE ORDER

Change Requested by: Engineer

CCO: 61	Suppl. No. 3	Contract No. 04 - 0120L4	Road ALA-80-1.6/2.7	FED. AID LOC.: NO FED AID

M C M CONSTRUCTION INC

You are directed to make the following changes from the plans and specifications or do the following described work not included in the plans and specifications for this contract. ***NOTE: This change order is not effective until approved by the Engineer.***

Description of work to be done, estimate of quantities and prices to be paid. (Segregate between additional work at contract price, agreed price and force account.) Unless otherwise stated, rates for rental of equipment cover only such time as equipment is actually used and no allowance will be made for idle time. This last percentage shown is the net accumulated increase or decrease from the original quantity in the Engineer's Estimate.

Extra Work at Force Account:

Additional releasing of jacks and re-jacking the temporary tower at Hinge EE on the existing Skyway structure as directed by the Engineer. Procedure shall be as outlined in CCO No. 61 except that jacks will be released for 7 days in lieu of 3 days.

Estimated cost of Extra Work at Force Account $50,000.00

Estimated Cost: Increase ☑ Decrease ☐ **$50,000.00**

By reason of this order the time of completion will be adjusted as follows: 0 days

Submitted by

Signature	Resident Engineer BEN GHAFGHAZI	Date 6/1/09

Approval Recommended by

Signature	Construction Engineer Ben Ghafghazi	Date 6/1/09

Engineer Approval by

Signature	Construction Manager Amer Bata / Meran Ardakanian	Date 7/15/09

We the undersigned contractor, have given careful consideration to the change proposed and agree, if this proposal is approved, that we will provide all equipm furnish the materials, except as may otherwise be noted above, and perform all services necessary for the work above specified, and will accept as full paymer therefor the prices shown above.

NOTE: If you, the contractor, do not sign acceptance of this order, your attention is directed to the requirements of the specifications as to proceeding with the ordered work and filing a written protest within the time therein specified.

Contractor Acceptance by

Signature	(Print name and title) EDMUNDO A. PUCHI, TREASURER	Date 7/8/09

CONTRACT CHANGE ORDER

Change Requested by: Engineer

CCO 62	Suppl. No. 0	Contract No. 04 - 0120L4	Road ALA-80-1.6/2.7	FED. AID LOC.: NO FED AID

To: **M C M CONSTRUCTION INC**

You are directed to make the following changes from the plans and specifications or do the following described work not included in the plans and specifications for this contract. ***NOTE: This change order is not effective until approved by the Engineer.***

Description of work to be done, estimate of quantities and prices to be paid. (Segregate between additional work at contract price, agreed price and force account.) Unless otherwise stated, rates for rental of equipment cover only such time as equipment is actually used and no allowance will be made for idle time. This last percentage shown is the net accumulated increase or decrease from the original quantity in the Engineer's Estimate.

Modify the prestressing sequence at Hinges EW and EE for Bridge No. 34-0006 L/R in accordance with the following:

Revise Section 10-1.01, "Order of Work," Note H per sheet 2 of 22 of this CCO.

Revise Section 10-1.53, "Concrete Structures," Note E per sheet 3 of 22 of this CCO.

Revise prestressing sequence per sheets 4 of 22 through 22 of 22 of this CCO. These sheets shall replace sheets 178, 193, 216, 217, 219, 220, 223, 224, 226, 227, 228, 229, 239, 240, 242, 243, 244, 245 and 260 of 643 of the contract plans.

There shall be no cost as a result of this change.

Consideration of a time adjustment will be deferred until completion of the work specified herein. Determination of a commensurate time extension will be made in accordance with Section 10-1.14, "Progress Schedule (Critical Path Method)," of the Special Provisions and Section 8-1.07, "Liquidated Damages," of the Standard Specifications.

Estimated Cost: **Increase** ☐ **Decrease** ☐ **$0.00**

By reason of this order the time of completion will be adjusted as follows: Deferred

Submitted by

Signature	Resident Engineer Ben Ghafghazi	Date 4/8/09

Approval Recommended by

Signature	Construction Manager Amer Bata	Date 4/8/09

Engineer Approval by

Signature	Construction Manager Amer Bata / Mehran Ardalanian	Date 7/15/09

We the undersigned contractor, have given careful consideration to the change proposed and agree, if this proposal is approved, that we will provide all equipment, furnish the materials, except as may otherwise be noted above, and perform all services necessary for the work above specified, and will accept as full payment therefor the prices shown above.

NOTE: If you, the contractor, do not sign acceptance of this order, your attention is directed to the requirements of the specifications as to proceeding with the ordered work and filing a written protest within the time therein specified.

Contractor Acceptance by

Signature	(Print name and title) EDMUNDO A. PUCHI, TREASURER	Date 7/9/09

JBirdy
For Rev 1
Only. 7/23/08

REGISTERED PROFESSIONAL ENGINEER
JAL BIRDY
No. C41547
EXP. 12/31/09
CIVIL
STATE OF CALIFORNIA

1 west of Diaphragm C, comprising of ledges and Frame 1 prestressing blockouts.

A. Perform modulus of elasticity, creep and shrinkage test on the concrete mix used for constructing the bridge and submit to the Engineer for review.
B. Survey the elevation of the Skyway hinge. The jacks at the Skyway temporary tower shall be released to have zero jacking force during this survey.
C. Confirm superstructure camber values with the Engineer after the Engineer's review of creep and shrinkage test values.
D. Complete the erection of falsework at Hinge E. Cast and post tension the Oakland Approach Structure.
E. Remove all falsework except for the temporary tower at Hinge E.
F. Report deflections at Hinge E between time of prestressing and time of pipe beam installation.
G. Construct the concrete barrier and bikepath railing east of Pier E17.
1 H. Construct ~~hinge diaphragms and~~ Hinge E concrete closure pour. 1
I. Jack up or weight down on the Oakland Approach Structure to the limits shown on the plans to align with the Skyway superstructures (with allowance of overlay).
J. Install the pipe beam and circular segmented bearings.
K. Construct the remaining concrete barrier and bikepath railing. Place polyester concrete overlay on the Skyway superstructures to a point approximately 16 m west of Hinge E.
L. Profilograph 188 m of the Skyway superstructures and grind the Skyway deck surface as necessary and as instructed by the Engineer.

The eastbound temporary Bent E19AR adjacent to Hinge FE construction sequence shall conform to the requirements shown on the plans and in the order prescribed herein:

A. Construct eastbound temporary Bent E19AR prior to erection of falsework for Frame 1 of the Oakland Approach Structure. Falsework for support of the bent cap of eastbound temporary Bent E19AR shall not be removed, and no additional load shall be applied to the top of the bent cap, until a minimum of 60 days after the driving of the steel shells for the CISS piles has been completed.
B. Erect falsework for Frame 1 of the Oakland Approach Structure to the western limits of the closure pour for Hinge FE.
C. Confirm superstructure camber values with the Engineer after the Engineer's review of creep and shrinkage test values.
D. Construct Frame 1 of the Oakland Approach Structure to the western limits of the closure pour for Hinge FE.
E. Remove all falsework beginning with the falsework for the eastbound temporary Bent E19AR adjacent to Hinge FE, if not previously removed.
F. Report deflections at end of superstructure adjacent to Hinge FE between time of prestressing and completion of this contract.
G. Jack up Structure and shim bearings if directed by Engineer to compensate for settlement of eastbound temporary Bent E19AR to maintain the structure elevation shown on the plans (with allowance for overlay).

Concrete barrier (Type K), temporary traffic screen, and temporary crash cushions shall be secured in place prior to commencing work for which the concrete barrier (Type K) and crash cushions are required.

Temporary metal beam guard railing and temporary alternative flared terminal system shall be secured in place prior to commencing work for which the temporary metal beam guard railing and temporary alternative flared terminal system are required.

Attention is directed to "Environmentally Sensitive Area" and "Temporary High Visibility Fence" of these special provisions. Prior to beginning work, the boundaries of the Environmentally Sensitive Areas (ESA) shall be clearly delineated in the field. The boundaries shall be delineated by the installation of temporary high visibility fence.

Attention is directed to "Water Pollution Control" of these special provisions regarding the submittal and approval of the "Storm Water Pollution Prevention Plan," prior to performing work having potential to cause water pollution.

Before removal of equipment from of the existing Mole Substation servicing the existing bridge begins, the Contractor shall complete construction of the new Mole Substation and underground duct banks and the new Mole Substation shall be fully operational.

The first order of work shall be to place the order for the electrical engineered and miscellaneous equipments, 12.47 kV unit substation, LVCCs, battery charger and 125 VDC battery system, remote terminal unit, cable trays, conduits and consumable materials. The Contractor shall furnish the Engineer with statements from the vendors or suppliers that the order for the unit substation materials, LVCCs, battery charger and 125 VDC battery system and supervisory control and data acquisition remote terminal unit system required for this contract has been received and accepted by the individual vendors; and the statements shall be furnished within 60 calendar days after the contract has been approved by the Attorney General, or the attorney appointed and authorized to represent the Department of Transportation. The statements shall include detailed

CONTRACT NO. 04-0120L4
CCO # 62
Sheet 2 of 22
4/6/09

Materials for access opening covers in soffits of new cast-in-place concrete box girder bridges shall conform to the provisions for materials in Section 75-1.03, "Miscellaneous Bridge Metal," of the Standard Specifications.

SPECIAL REQUIREMENTS FOR FRAMES EB1 AND WB1

Superstructure concrete in Frame 1 of the Eastbound Oakland Approach Structure and Frame 1 of the Westbound Oakland Approach Structure shall conform to the following in addition to all other requirements of the plans, Standard Specifications, and these special provisions:

A. The concrete mix for the superstructure concrete shall be designed to provide the following additional properties:

1. Modulus of Elasticity: The modulus of elasticity of portland cement concrete shall be at least 32,000 MPa at 28 days when tested in accordance with the requirements in California Test 522. The samples shall be moist-cured for 7 days, followed by air drying at 23°C and 50% relative humidity until test age. The modulus shall also be reported at 3, 7, 56 and 90 days. Test specimen size shall be same as for compressive strength tests. Test results shall be based on the average of three test specimens at each age.
2. Creep: The specific creep coefficient, as determined in accordance with the requirements in ASTM Designation: C 512, after 365 days of loading, shall not exceed 75 millionths/MPa. Test specimens shall be 152 x 305 mm cylinders and shall be moist-cured for 7 days, followed by air drying at 23°C and 50% relative humidity. Test cylinders shall be loaded at 28 days to a stress of 20% to 40% of the design compressive strength shown on the plans. Creep coefficients after 28, 56, 90 and 180 days of loading shall be reported along with a predicted 365 day creep coefficient. The Contractor shall predict the coefficient at 365 days based on the procedures of CEB-FIP Model Code for Concrete Structures, by the Comite Euro-International de Beton. Mix design approval shall be contingent upon the predicted 365 day creep coefficient satisfying the stated requirement, however, the Contractor shall still report the 365 day creep coefficient determined from test results when available.
3. Shrinkage: The shrinkage strain of portland cement concrete shall not exceed 0.045% after 180 days of drying in accordance with the requirements in ASTM Designation: C 157. Sample size shall be 100 x 100 x 285 mm. Samples shall be moist-cured for 7 days followed by air drying at 23°C and 50% relative humidity. Shrinkage strain shall be calculated as the change in strain from the beginning of drying at 7 days.

B. Concrete testing shall be performed by the Contractor's independent test laboratory. The laboratory shall be accredited or inspected for conformance to the requirements in ASTM Designation: C 1077 and shall be approved by the Engineer. All testing shall be performed by ACI certified technicians.

C. Modulus of Elasticity, Creep and shrinkage test results shall be submitted to the Engineer for each proposed mix. The test results shall be submitted in both printed form and electronic media. Electronic results shall be presented in a tab-delimited format on 90 mm diskette with a capacity of at least 1.4 megabytes. The Engineer will notify the Contractor in writing when the test results are determined to be complete. Once the Engineer has determined the test results to be complete, the Contractor shall allow the Engineer 25 working days to review the test results. Superstructure concrete shall not be placed for the frames referenced above until the Engineer has reviewed the test reports and responded in writing.

D. Superstructure camber values shown on the plans are calculated based on estimated modulus of elasticity and time-dependent creep and shrinkage values. After approval of the modulus of elasticity, creep and shrinkage test results, the Engineer reserves the right to modify the camber values for the above referenced frames during the 25 working day review period specified above.

E. The Contractor shall measure the deflection of the cantilever end at Hinge E to the nearest millimeter each working day from the time prestressing of the frames is completed until the ~~Hinge E closures are placed~~ pipe beams are installed and the bearings grouted, and shall report the measured values to the Engineer no less than once every seven days. 1

F. The Contractor shall notify the Engineer at least 10 working days prior to placing Hinge E closures. The Engineer may order a delay in the closure placements. An ordered delay in the closure placement will result in an increase in the number of working days allowed for the completion of the work if the delay period involved is considered to be the current controlling operation in conformance with the provisions in Section 8-1.06, "Time of Completion," of the Standard Specifications. The Contractor will not be entitled to any compensation other than an adjustment of contract time due to the delay in the Hinge E closure placement ordered by the Engineer.

Full compensation for conforming to the above requirements shall be considered as included in the contract prices paid for the various contract items of work involved and no additional compensation will be allowed therefor.

JAL Birdy
For Rev 1
Only. 7/23/08

REGISTERED PROFESSIONAL ENGINEER
JAL BIRDY
No. C41547
EXP. 12/31/09
CIVIL
STATE OF CALIFORNIA

1

CONTRACT NO. 04-0120L4
CCO # 62
Sheet 3 of 22
4/6/09

DIST	COUNTY	ROUTE	KILOMETER POST TOTAL PROJECT	SHEET NO.	TOTAL SHEETS
04	Ala	80	1.6/2.7	178R1	643

Caltrans Metric

Adam Wang
REGISTERED ENGINEER - CIVIL
1-29-07
PLANS APPROVAL DATE

REGISTERED PROFESSIONAL ENGINEER ADAM TN WANG No. 40402 Exp. 3-31-2007 CIVIL STATE OF CALIFORNIA

The State of California or its officers or agents shall not be responsible for the accuracy or completeness of electronic copies of this plan sheet.

T.Y. LIN / MOFFATT & NICHOL
TWO HARRISON STREET, SUITE 500
SAN FRANCISCO, CA 94105

W. KOO & ASSOCIATES, INC
625 THE CITY DRIVE SOUTH, SUITE 200
ORANGE, CA 92868

To get to the Caltrans web site, go to: http://www.dot.ca.gov

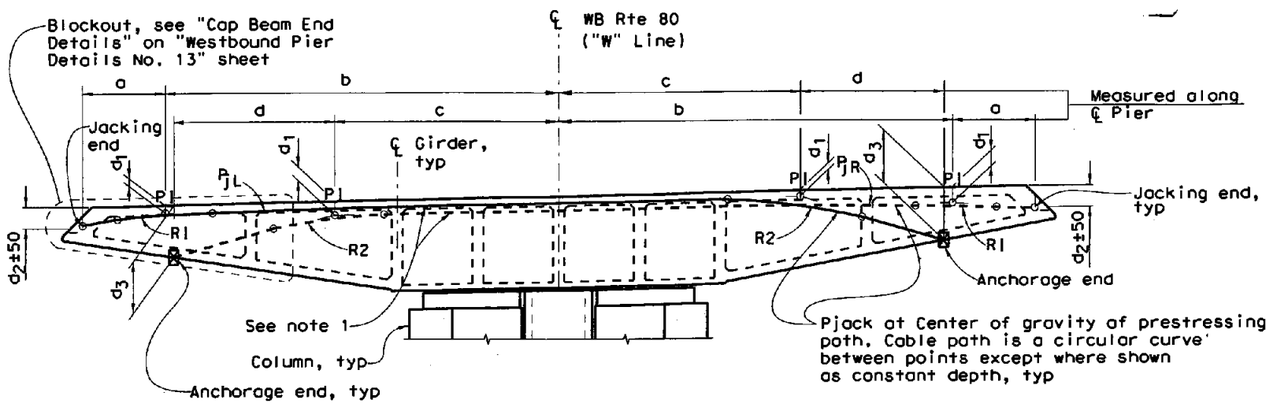

(PIERS E17L THRU E22L)

PIER CAP BEAM PRESTRESSING PATH LAYOUT

No Scale

MARK	DATE	DESCRIPTIONS	BY	CH'D	CCO#
1	3/12/08	REVISED PRESTRESS SEQUENCE	VT	JSK	

REVISIONS

REGISTERED PROFESSIONAL ENGINEER VINH DIEU TRINH No. 50685 Exp. 9-30-2009 CIVIL STATE OF CALIFORNIA

STAMP IS VALID FOR REVISION 1 ONLY

CONTRACT CHANGE ORDER NO. 62
SHEET 4 OF 22 4/6/09

Note:

1. In order to minimize the congestion of jacking end blockouts, the contractor shall divide the Pjack equally & symmetrically and apply it simultaneously at both ends of the Cap Beam. The jacking and anchorage ends shall be alternately located so they do not interfere with each other at the same end. Each duct shall be prestressed from one end only. The distance between the jacking end and anchorage end (on the same end of the beam) shall be as shown in "Pier Cap Beam Prestressing Table". For center of gravity of prestressing path, see "Pier Cap Beam Prestressing Path Layout".
2. Control dimensions are given horizontally or vertically.
3. For Cap Beam Dimensions, see "Westbound Typical Section No. 1 & 2" sheets.
4. Pre-installed Strand duct should be used for pier cap prestress, unless jacking blockout from soffit is approved.

LEGEND

⊠ = Denotes theoretical point of no movement for one end stressing

Ⓐ Denotes Girder designation

PRESTRESS NOTES - PIER CAP BEAM

1860 MPa Low Relaxation Strand:
Pjack = See "Pier Cap Beam Prestress Table"
Anchor Set = 10 mm
Friction Curvature Coefficient μ = 0.15
Friction Wobble Coefficient k = 0.0007/m
Concrete: f'_c = 45 MPa @ 28 days (Pier E17L, E18L & E19L)
f'_c = 38 MPa @ 28 days (Pier E20L, E21L & E22L)
f'_{ci} = 43* MPa @ time of stressing (Piers E17L, E18L & E19L)
f'_{ci} = 35* MPa @ time of stressing (Piers E20L, E21L & E22L)
Contractor shall submit elongation calculations based on initial stress at ⊠ = "A" times jacking stress.
One end stressing shall be performed on jacking end from either end.

PIER CAP BEAM PRESTRESSING TABLE

Locations	Pjack (kN) LEFT	Pjack (kN) RIGHT	o	b	c	d	d_1	d_2	d_3	minR_1	minR_2	"A" Initial force coefficient
Pier E17L	32 930	32 930	2220	10 565	6000	4335	260	550	1540	20 700	12 100	0.919
Pier E18L	24 500	24 500	2220	10 565	5920	4415	180	550	1480	16 500	11 600	0.913
Pier E19L	25 150	25 150	2220	10 565	6090	4245	180	550	1430	16 500	12 800	0.874
Pier E20L	19 580	19 580	2190	10 595	7565	3890	180	550	1520	15 800	7 600	0.907
Pier E21L	16 690	16 690	1890	10 895	6655	3595	180	550	1420	10 600	5 800	0.898
Pier E22L	16 690	16 690	1610	11 175	7500	3310	180	550	1320	6 600	4 200	0.884

*f'ci can be reduced to 38 MPa (Piers E17L thru E19L) & 28 MPa (Piers E20L thru E22L), if rebar spiral in local anchor area provided is longer than the min length recommended by manufacturer. Contractor shall submit the calculation to Engineer for approval prior to construction.

SUGGESTED PRESTRESSING SEQUENCE - HINGES EW TO ABUT E23L

Stressing shall not take place until the deck has been placed and has reached specified strength. (100% f'ci)
Pjack should be applied in stages:
(Pjack denotes prestressed jacking forces @ different locations where specified)
1 Diaphragms C and D shall be prestressed prior to pier cap transverse stressing and girder longitudinal stressing from Hinge EW to Hinge FW. See "Westbound Hinge EW Details No. 5" sheet for Diaphragms C and D stressing sequence and requirements.
Pier cap transverse stressing and girder longitudinal stressing shall not occur until 35 days after placement of deck slab concrete.
Stage 1: Stress all Pier Cap Beams to 25% Pjack.
Stage 2: Stress all Girders (Girders Ⓑ thru Ⓚ only) to 25% Pjack.
Stage 3: Repeat stages 1 & 2 with increasing Pjack by 25% for each process till reaching 75% Pjack.
Stage 4: Stress all Pier Cap Beams to 100% Pjack, grout the prestressing ducts in Pier Cap Beams and patch the blockout with quick-set concrete only.
Stage 5: Stress Girders Ⓐ & Ⓛ and deck slab longitudinal prestressing in frame 1 to 100% Pjack after the grout/concrete at Pier Cap Beam prestressing ducts and anchorage blockout reaches required strength.
Stage 6: Stress all Girders (Girder Ⓑ thru Ⓚ only) to 100% Pjack.
Stage 7: Grout all ducts at Girders (Girders Ⓐ thru Ⓛ) after all prestressing is completed.
At no time during stressing operations shall the eccentric prestress force about the center line of pier exceed the capacity of one duct.
No removal of falsework is allowed until all stressing and grouting are completed.
For Girder designation, see "Westbound Girder Layout No. 1 thru No. 4" sheets.

ALL DIMENSIONS ARE IN MILLIMETERS UNLESS OTHERWISE SHOWN

DESIGN OVERSIGHT
SAM AKKAD FRANCISCO CARPIO BERNARD CHAN HASAN EL-NATUR
SIGN OFF DATE 3/20/2009
Rev. Date: 5-18-98

	BY	CHECKED
DESIGN	K. Russell	A. Moubayed
DETAILS	A. Segura	A. Moubayed
QUANTITIES	O. Jaradat	H. Haroun

PREPARED FOR THE STATE OF CALIFORNIA DEPARTMENT OF TRANSPORTATION

Adam Wang
PROJECT ENGINEER

CU 04
EA 0120L1

BRIDGE NO. 34-0006L/R
KILOMETER POST 1.6

ORIGINAL SCALE IN MILLIMETERS FOR REDUCED PLANS 0 10 20 30 40 50 60 70 80 90 100

DISREGARD PRINTS BEARING EARLIER REVISION DATES

REVISION DATES (PRELIMINARY STAGE ONLY) 5/18/05 10/28/05 8/28/06 10/28/04 2/14/05 6/24/05 11/14/05 1/31/06 4/13/06 1/28/06

SAN FRANCISCO OAKLAND BAY BRIDGE
EAST SPAN SEISMIC SAFETY PROJECT

OAKLAND APPROACH STRUCTURES-PHASE 1

WESTBOUND PIER DETAILS NO. 10

SHEET 65R1 OF 224

DIST.	COUNTY	ROUTE	KILOMETER POST TOTAL PROJECT	SHEET NO.	TOTAL SHEETS
04	Ala	80	1.6/2.7	193R1	643

REGISTERED ENGINEER - CIVIL

1-29-07
PLANS APPROVAL DATE

REGISTERED PROFESSIONAL ENGINEER MOHAN S. CHAR No. C057894 Exp. 6/30/08 CIVIL STATE OF CALIFORNIA

The State of California or its officers or agents shall not be responsible for the accuracy or completeness of electronic copies of this plan sheet.

T.Y. LIN / MOFFATT & NICHOL
TWO HARRISON STREET, SUITE 500
SAN FRANCISCO, CA 94105

LIM & NASCIMENTO ENGINEERING CORPORATION
12 MAUCHLY, BLDG L
IRVINE, CA 92618

To get to the Caltrans web site, go to: http://www.dot.ca.gov

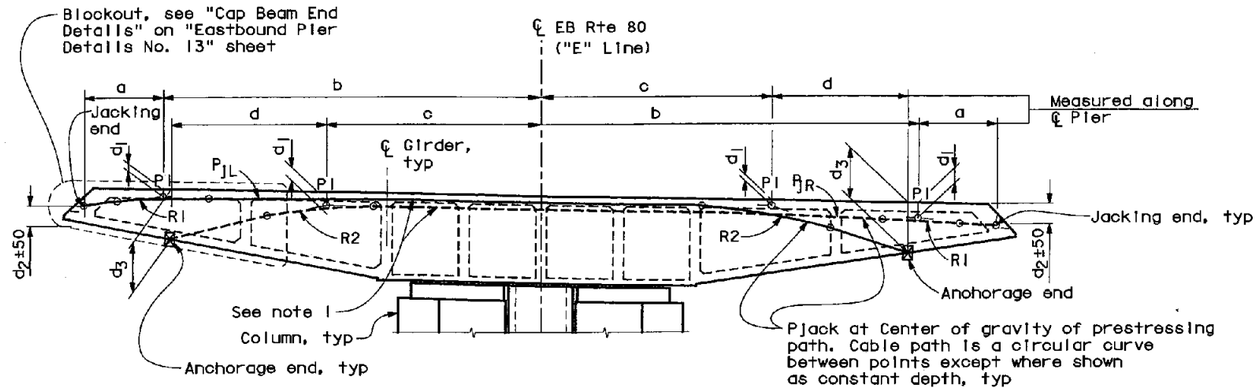

(PIERS E17R THRU E19R)

PIER CAP BEAM PRESTRESSING PATH LAYOUT

No Scale

Notes:

1. In order to minimize the congestion of jacking end blockouts, the contractor shall divide the Pjack equally & symmetrically and apply it simultaneously at both ends of the Cap Beam. The jacking and anchorage ends shall be alternately located so they do not interfere with each other at the same end. Each duct shall be prestressed from one end only. The distance between the jacking end and anchorage end (on the same end of the beam) shall be as shown in "Pier Cap Beam Prestressing Table". For center of gravity of prestressing path, see "Pier Cap Beam Prestressing Path Layout".
2. Control dimensions are given horizontally or vertically.
3. For Cap Beam Dimensions, see "Eastbound Typical Section No. 1 & 2" sheets.
4. Pre-installed Strand duct should be used for pier cap prestress, unless jacking blockout from soffit is approved.

LEGEND

⊠ = Denotes theoretical point of no movement for one end stressing

(A) Denotes Girder designation

MARK	DATE	DESCRIPTION	BY	CH'D
1	3/12/09	REVISED PRESTRESS SEQUENCE	MSC	TWD
		REVISION(S)		

REGISTERED PROFESSIONAL ENGINEER MOHAN S. CHAR No. C057894 Exp. 6/30/10 CIVIL STATE OF CALIFORNIA

STAMP IS VALID FOR REVISION 1 ONLY

CONTRACT CHANGE ORDER NO. 62
SHEET 5 OF 22 4/6/09

PRESTRESS NOTES - PIER CAP BEAM

1860 MPa Low Relaxation Strand:
Pjack = See "Pier Cap Beam Prestress Table"
Anchor Set = 10 mm
Friction Curvature Coefficient μ = 0.15
Friction Wobble Coefficient k = 0.0007/m
Concrete: f'_c = 45 MPa @ 28 days (Pier E17R, E18R & E19R)
f'_{ci} = 43* MPa @ time of stressing (Piers E17R, E18R & E19R)
Contractor shall submit elongation calculations based on initial stress at ⊠ = "A" times jacking stress.
One end stressing shall be performed on jacking end from either end.

PIER CAP BEAM PRESTRESSING TABLE

Locations	Pjack (kN) LEFT	Pjack (kN) RIGHT	a	b	c	d	d_1	d_2	d_3	minR_1	minR_2	"A" LEFT	"A" RIGHT
Pier E17R	24 500	33 500	2220	10 565	6000	4335	260	550	1540	20 700	12 100	0.901	0.901
Pier E18R	20 000	31 900	2220	10 565	5920	4415	260	550	1480	16 500	11 600	0.907	0.907
Pier E19R	22 250	28 500	2220	10 565	6090	4245	260	550	1430	16 500	12 800	0.909	0.909

*f'ci can be reduced to 38 MPa (Piers E17R thru E19R), if rebar spiral in local anchor area provided is longer than the min length recommended by manufacturer. Contractor shall submit the calculation to Engineer for approval prior to construction.

SUGGESTED PRESTRESSING SEQUENCE - HINGE EE TO HINGE FE

Stressing shall not take place until the deck has been placed and has reached specified strength. (100% f'ci)
Pjack should be applied in stages:
(Pjack denotes prestressed jacking forces @ different locations where specified)
1 Diaphragms C and D shall be prestressed prior to pier cap transverse stressing and girder longitudinal stressing from Hinge EE to Hinge FE. See "Eastbound Hinge EE Details No. 5" sheet for Diaphragms C and D stressing sequence and requirements. Pier Cap transverse stressing and girder longitudinal stressing shall not occur until 35 days after placement of deck slab concrete.
~~Stage 1: Stress all Pier Cap Beams to 25% Pjack.~~
Stage 2: Stress all Girders (Girders (B) thru (K) only) to 25% Pjack.
Stage 3: Repeat stages 1 & 2 with increasing Pjack by 25% for each process till reaching 75% Pjack.
Stage 4: Stress all Pier Cap Beams to 100% Pjack, grout the prestressing ducts in Pier Cap Beams and patch the blockout with quick-set concrete only.
Stage 5: Stress Girders (A) & (L) and deck slab longitudinal prestressing in frame 1 to 100% Pjack after the grout/concrete at Pier Cap Beam prestressing ducts and anchorage blockout reaches required strength.
Stage 6: Stress all Girders (Girder (B) thru (K) only) to 100% Pjack.
Stage 7: Grout all ducts at Girders (Girders (A) thru (L)) after all prestressing is completed.
At no time during stressing operations shall the eccentric prestress force about the centerline of pier exceed the capacity of one duct. No removal of falsework is allowed until all stressing and grouting are completed.
For Girder designation, see "Eastbound Girder Layout No. 1" sheet.

ALL DIMENSIONS ARE IN MILLIMETERS UNLESS OTHERWISE SHOWN

DESIGN OVERSIGHT
SAM AKKAD FRANCISCO CARPIO BERNARD CHAN HASAN EL-MATUR
SIGN OFF DATE 3/19/2009

	BY	CHECKED
DESIGN	M. CHAR	T. DUDLEY
DETAILS	N. MORCILLO/M. ANDRASEK	M. CHAR
QUANTITIES	N. MORCILLO/Y. KIM	V. SIVAKOLUNDU/T. DUDLEY

PREPARED FOR THE STATE OF CALIFORNIA DEPARTMENT OF TRANSPORTATION

MOHAN S. CHAR
PROJECT ENGINEER

BRIDGE NO. 34-0006L/R
KILOMETER POST 1.6

SAN FRANCISCO OAKLAND BAY BRIDGE
EAST SPAN SEISMIC SAFETY PROJECT

OAKLAND APPROACH STRUCTURES - PHASE 1

EASTBOUND PIER DETAILS NO. 8

Rev. Date: 5-18-98

ORIGINAL SCALE IN MILLIMETERS FOR REDUCED PLANS 0 10 20 30 40 50 60 70 80 90 100

CU 04
EA 0120L1

DISREGARD PRINTS BEARING EARLIER REVISION DATES

REVISION DATES (PRELIMINARY STAGE ONLY) 5/16/03 10/30/03 8/20/04 10/29/04 2/18/05 6/24/05 11/14/05 1/31/06 4/17/06 7/28/06

SHEET 80 OF 224

FILE => u:\BRIDGE\TYL10502\2009 CCOs\Pier8_HingeEW5\04-0120L1-34-006-1-pierdet-east8.dgn

USERNAME => LAN DATE PLOTTED => 3/12/2009 TIME PLOTTED => 11:53:37 AM

DIST	COUNTY	ROUTE	KILOMETER POST TOTAL PROJECT	SHEET NO.	TOTAL SHEETS
04	Ala	80	1.6/2.7	216R1	643

Caltrans Metric

Adam Wang
REGISTERED ENGINEER - CIVIL
1-29-07
PLANS APPROVAL DATE

REGISTERED PROFESSIONAL ENGINEER ADAM TN WANG No. 40402 Exp. 3-31-2007 CIVIL STATE OF CALIFORNIA

The State of California or its officers or agents shall not be responsible for the accuracy or completeness of electronic copies of this plan sheet.

T.Y. LIN / MOFFATT & NICHOL
TWO HARRISON STREET, SUITE 500
SAN FRANCISCO, CA 94105

W. KOO & ASSOCIATES, INC
625 THE CITY DRIVE SOUTH, SUITE 200
ORANGE, CA 92868

To get to the Caltrans web site, go to: http://www.dot.ca.gov

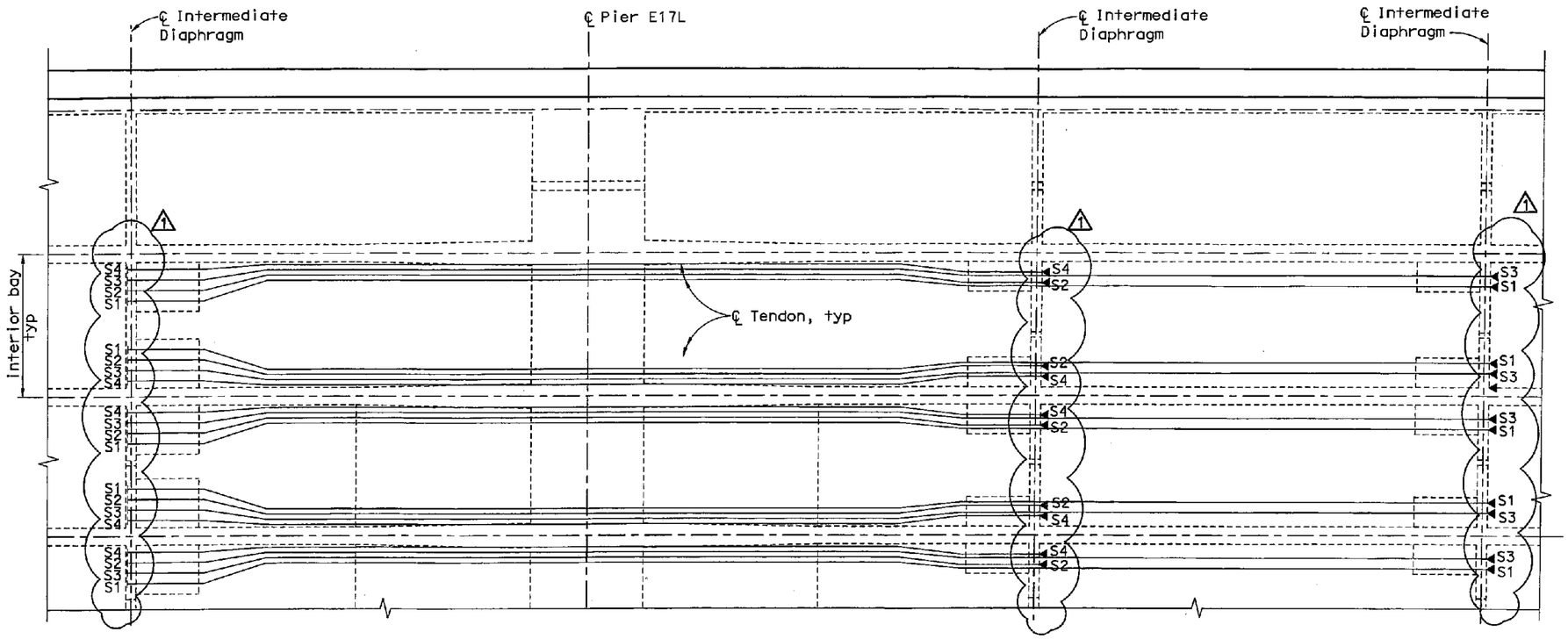

DECK TENDON LAYOUT

1:75

REGISTERED PROFESSIONAL ENGINEER VINH DIEU TRINH No. 50685 Exp. 9-30-2009 CIVIL STATE OF CALIFORNIA

STAMP IS VALID FOR REVISION 1 ONLY

Pjack Table (FRAME 1)

	Total No. of Tendons	Jacking Force perTendon kN
S1	8	2930
S2	8	2930
S3	8	2930
S4	8	2930

MARK	DATE	DESCRIPTIONS	BY	CH'D	CCO#
1	7/21/08	JACKING & ANCHORAGE ENDS REVERSED	VT	JSK	

REVISIONS

LEGEND

- Denotes prestressing jacking end
- Denotes prestressing anchorage end

CONTRACT CHANGE ORDER NO. 63
SHEET 6 OF 22 4/6/09

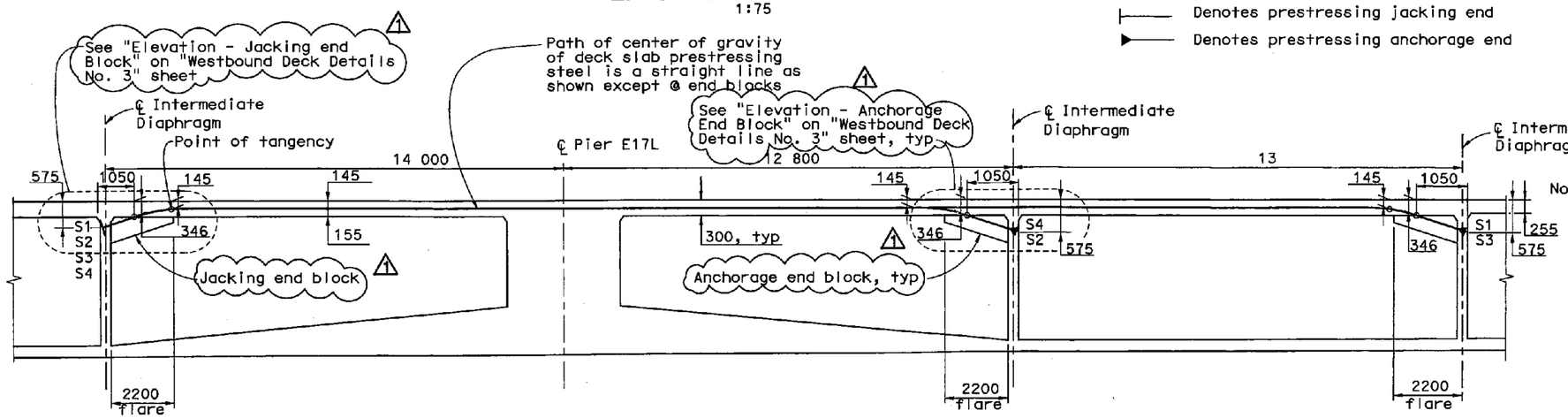

PART LONGITUDINAL SECTION- FRAME 1

No Scale

(Section shown for frame 1 - all interior bays)

Notes:

1. All top slab tendons shall be capable for max of 15-15.2 mm Ø strands in each Tendon.
2. The difference of stressed tendons between two girders webs should not be more than one tendon.
3. Minimum radius for tendon deviation shall be 5500 mm.

PRESTRESSING NOTES:

1860 MPa Low Relaxation Strand:
Jacking force: See "Pjack Table"
Anchorage set: 10 mm
Friction coefficent: 0.25
Wobble coefficient: 0.0007/m
Other prestressing notes, see "Westbound Girder Layout No. 2" sheet.
One end stressing shall be performed from jacking end.

Note:
Dimensions shown may be changed to suit Contractors prestressing system, subject to Engineer's approval.

ALL DIMENSIONS ARE IN MILLIMETERS UNLESS OTHERWISE SHOWN

DESIGN OVERSIGHT
SAM AKKAD FRANCISCO CARPIO BERNARD CHAN HASAN EL-NATUR
SIGN OFF DATE 7/25/2008

	BY	CHECKED
DESIGN	K. Russell	A. Moubayed
DETAILS	G. Buelow	A. Moubayed
QUANTITIES	O. Jaradat	H. Haroun

PREPARED FOR THE STATE OF CALIFORNIA DEPARTMENT OF TRANSPORTATION

Adam Wang
PROJECT ENGINEER

BRIDGE NO. 34-0006L/R
KILOMETER POST 1.6

CU 04
EA 0120L1

DISREGARD PRINTS BEARING EARLIER REVISION DATES

SAN FRANCISCO OAKLAND BAY BRIDGE
EAST SPAN SEISMIC SAFETY PROJECT

OAKLAND APPROACH STRUCTURES-PHASE 1

WESTBOUND DECK DETAILS NO. 2

REVISION DATES (PRELIMINARY STAGE ONLY) 10/20/03 8/28/04 10/29/04 2/14/05 8/24/05 11/14/05 1/31/06 6/22/06 7/26/06 7/21/08

SHEET 103 OF 224

Rev. Date: 5-18-98

ORIGINAL SCALE IN MILLIMETERS FOR REDUCED PLANS 0 10 20 30 40 50 60 70 80 90 100

FILE => T:\Cad\320-19\21\CCO\AnchorageCCO\CC062-CLOUD\04-0120L1-34-006-m-deckdet2.dgn

USERNAME => 18781 DATE PLOTTED => 8/DATE TIME PLOTTED => 8TIME

DIST	COUNTY	ROUTE	KILOMETER POST TOTAL PROJECT	SHEET NO.	TOTAL SHEETS
04	Ala	80	1.6/2.7	217R1	643

To get to the Caltrans web site, go to: http://www.dot.ca.gov

Caltrans Metric

Adam Wang
REGISTERED ENGINEER - CIVIL
1-29-07
PLANS APPROVAL DATE

REGISTERED PROFESSIONAL ENGINEER ADAM TM WANG No. 40402 Exp. 3-31-2007 CIVIL STATE OF CALIFORNIA

The State of California or its officers or agents shall not be responsible for the accuracy or completeness of electronic copies of this plan sheet.

T.Y. LIN / MOFFATT & NICHOL
TWO HARRISON STREET, SUITE 500
SAN FRANCISCO, CA 94105

W. KOO & ASSOCIATES, INC
625 THE CITY DRIVE SOUTH, SUITE 200
ORANGE, CA 92868

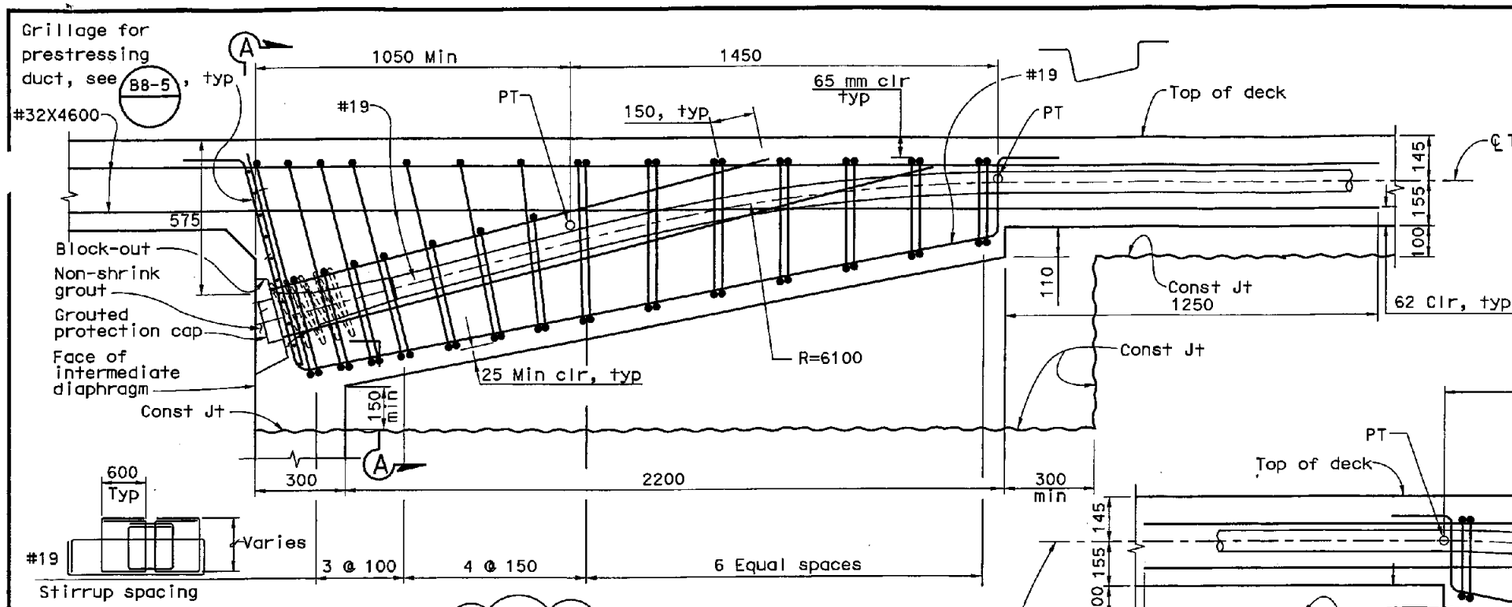

ELEVATION - JACKING END BLOCK 1:10

Notes:

1. Girder stem and deck reinforcement not shown for clarity.
2. Spiral reinforcement details have not been shown. The manufacturer shall provide the required spiral reinf for anchorage use.
3. Place all reinforcement to clear ducts.

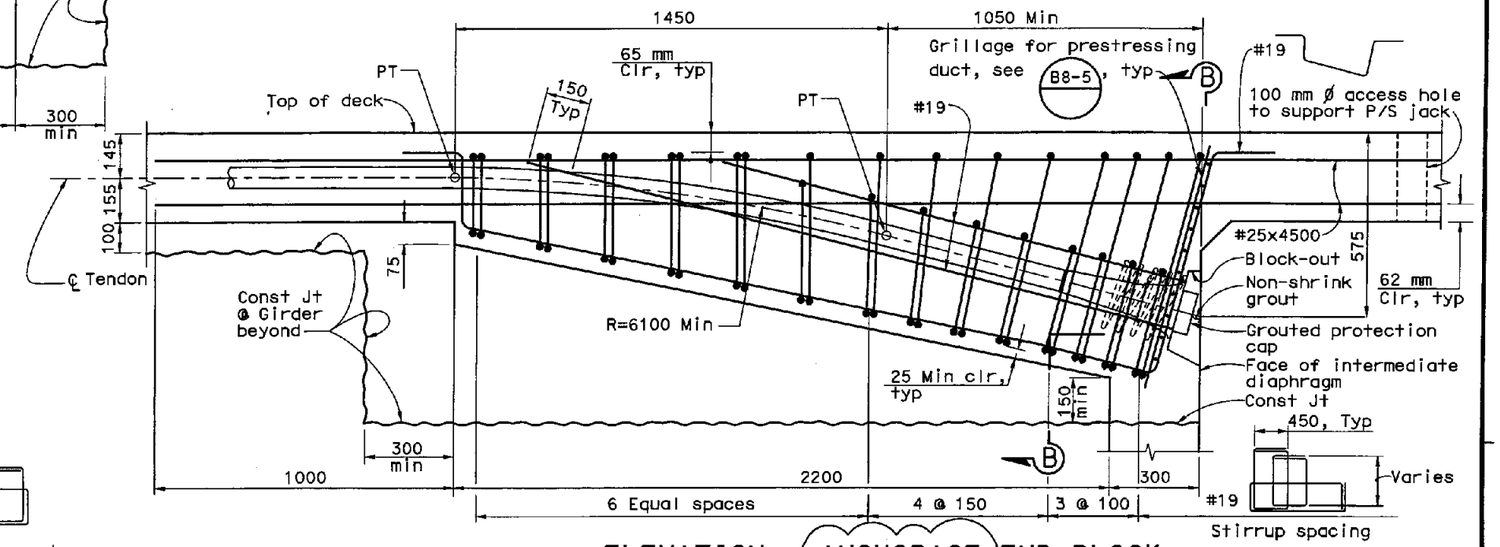

ELEVATION - ANCHORAGE END BLOCK 1:10

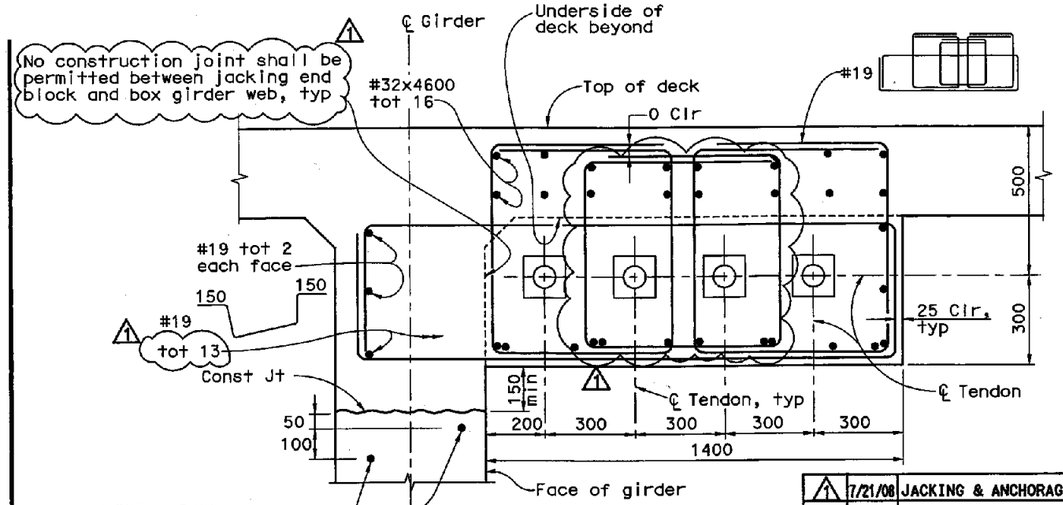

SECTION A-A 1:10

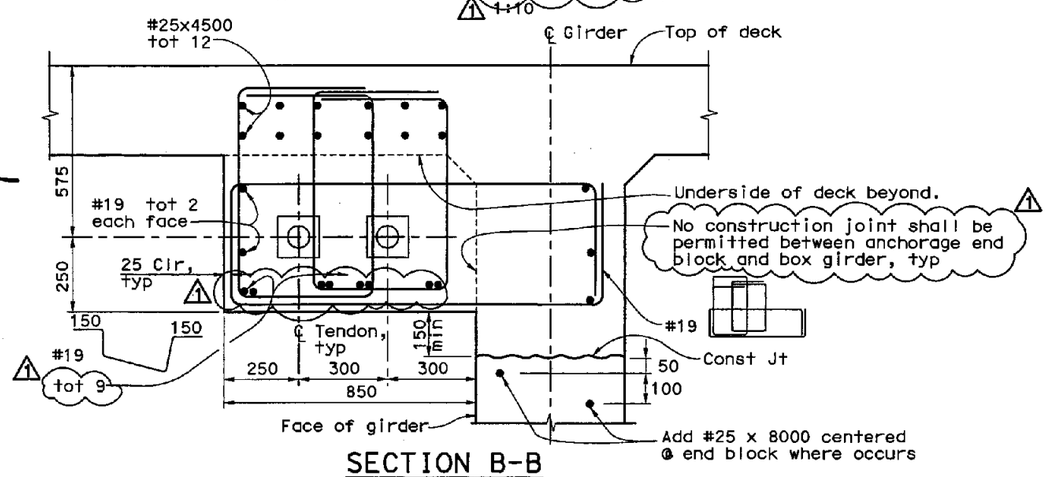

SECTION B-B 1:10

REGISTERED PROFESSIONAL ENGINEER VINH DIEU TRINH No. 50685 Exp. 9-30-2009 CIVIL STATE OF CALIFORNIA

STAMP IS VALID FOR REVISION 1 ONLY

MARK	DATE	DESCRIPTIONS	BY	CH'D	CCO#
1	7/21/08	JACKING & ANCHORAGE ENDS REVERSED	VT	JSK	
		REVISIONS			

Note:
Dimensions shown may be changed to suit Contractors prestressing system, subject to Engineer's approval.

CONTRACT CHANGE ORDER NO. 62
SHEET 7 OF 22 4/6/09

ALL DIMENSIONS ARE IN MILLIMETERS UNLESS OTHERWISE SHOWN

SAN FRANCISCO OAKLAND BAY BRIDGE
EAST SPAN SEISMIC SAFETY PROJECT

OAKLAND APPROACH STRUCTURES-PHASE 1

WESTBOUND DECK DETAILS NO. 3

DESIGN OVERSIGHT
SAM AKKAD FRANCISCO CARPIO BERNARD CHAN HASAN EL-NATUR
SIGN OFF DATE 7/25/2008

	BY	CHECKED
DESIGN	X. Wu	A. Moubayed
DETAILS	G. Buelow	A. Moubayed
QUANTITIES	K. Russell	H. Haroun

PREPARED FOR THE STATE OF CALIFORNIA DEPARTMENT OF TRANSPORTATION

Adam Wang
PROJECT ENGINEER

BRIDGE NO. 34-0006L/R
KILOMETER POST 1.6

CU 04
EA 0120L1

Rev. Dates 5-8-98

ORIGINAL SCALE IN MILLIMETERS FOR REDUCED PLANS 0 10 20 30 40 50 60 70 80 90 100

DISREGARD PRINTS BEARING EARLIER REVISION DATES

REVISION DATES (PRELIMINARY STAGE ONLY): 10/20/05 8/30/06 10/26/06 2/28/05 5/24/05 11/14/06 1/31/06 4/13/06 1/26/06 7/21/08

SHEET 104 OF 224

FILE => T:\Cad\320-19\21\CCO\AnchorageCCO\CC062-CLOUD\04-012011-34-006-m-deckdet3.dgn

USERNAME => 18781 DATE PLOTTED => $DATE TIME PLOTTED => $TIME

DIST.	COUNTY	ROUTE	KILOMETER POST TOTAL PROJECT	SHEET NO.	TOTAL SHEETS
04	Ala	80	1.6/2.7	219R1	643

REGISTERED ENGINEER - CIVIL

1-29-07
PLANS APPROVAL DATE

REGISTERED PROFESSIONAL ENGINEER MOHAN S. CHAR No. C057894 Exp. 6/30/08 CIVIL STATE OF CALIFORNIA

The State of California or its officers or agents shall not be responsible for the accuracy or completeness of electronic copies of this plan sheet.

T.Y. LIN / MOFFATT & NICHOL
TWO HARRISON STREET, SUITE 500
SAN FRANCISCO, CA 94105

LIM & NASCIMENTO ENGINEERING CORPORATION
12 MAUCHLY, BLDG L
IRVINE, CA 92618

To get to the Caltrans web site, go to: http://www.dot.ca.gov

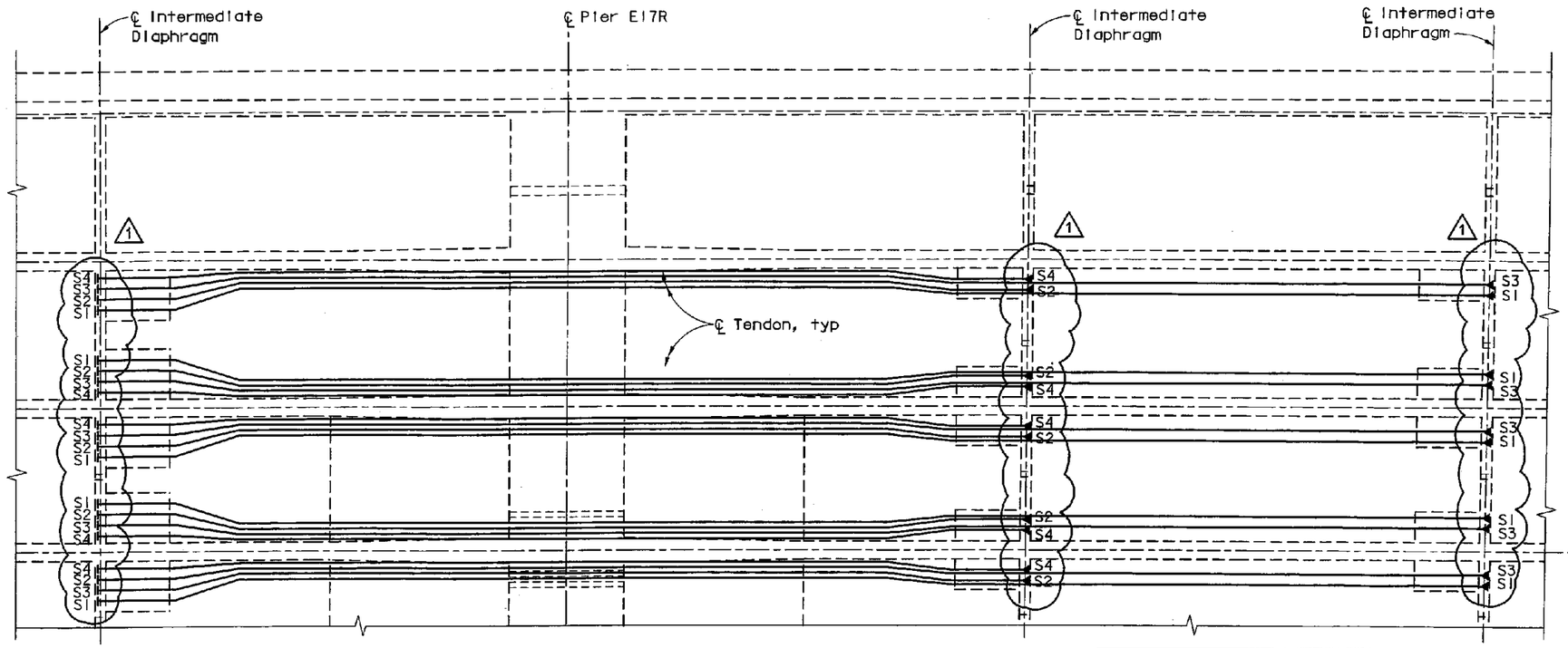

DECK TENDON LAYOUT

1:75

Pjack Table (Frame 1)		
Tendon No.	Total No. of Tendons	Jacking Force per Tendon kN
S1	8	2930
S2	8	2930
S3	8	2930
S4	8	2930

MARK	DATE	REVISION(S)	BY	CH'D
1	7/31/08	JACKING & ANCHORAGE ENDS REVERSED	MSC	TWD

DESCRIPTIONS

CONTRACT CHANGE ORDER NO. 62
SHEET 8 OF 22 4/6/09

REGISTERED PROFESSIONAL ENGINEER MOHAN S. CHAR No. C057894 Exp. 6/30/10 CIVIL STATE OF CALIFORNIA

STAMP IS VALID FOR REVISION 1 ONLY

LEGEND

- Denotes prestressing jacking end
- Denotes prestressing anchorage end

Notes:

1. All top slab ducts shall be capable for max of 15-15.2 mm Ø strands in each duct.
2. The difference of stressed tendon between two girders webs should not be more than one tendon.
3. Minimum radius for tendon deviation shall be 5500 mm.

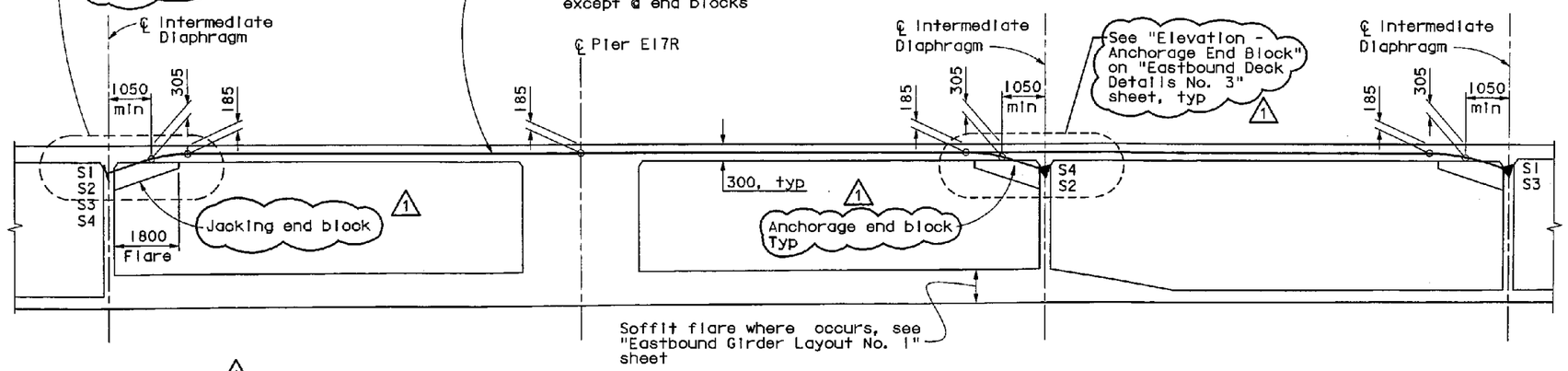

PART LONGITUDINAL SECTION - FRAME 1

No Scale

Note:
Dimensions shown may be changed to suit Contractor's prestressing system, subject to Engineer's approval.

PRESTRESSING NOTES:

1860 MPa Low Relaxation Strand:
Jacking force: See "Pjack Table (Frame 1)"
Anchorage set: 10 mm
Friction coefficent: 0.25
Wobble coefficient: 0.0007/m

Other prestressing notes, see "Eastbound Girder Layout No. 2" sheet.
One end stressing shall be performed from jacking end.

ALL DIMENSIONS ARE IN MILLIMETERS UNLESS OTHERWISE SHOWN

DESIGN OVERSIGHT
SAM AKKAD FRANCISCO CARPIO BERNARD CHAN HASAN EL-NATUR
SIGN OFF DATE 8/6/2008

	BY	CHECKED
DESIGN	M. CHAR	T. DUDLEY
DETAILS	N. MORCILLO/M. ANDRASEK	M. CHAR
QUANTITIES	N. MORCILLO/Y. KIM	V.SIVAKOLUNDU/T.DUDLEY

PREPARED FOR THE STATE OF CALIFORNIA DEPARTMENT OF TRANSPORTATION

MOHAN S. CHAR
PROJECT ENGINEER

BRIDGE NO. 34-0006L/R
KILOMETER POST 1.6

SAN FRANCISCO OAKLAND BAY BRIDGE
EAST SPAN SEISMIC SAFETY PROJECT

OAKLAND APPROACH STRUCTURES - PHASE 1

EASTBOUND DECK DETAILS NO. 2

Rev. Date: 5-18-98

ORIGINAL SCALE IN MILLIMETERS FOR REDUCED PLANS 0 10 20 30 40 50 60 70 80 90 100

CU 04
EA 0120L1

DISREGARD PRINTS BEARING EARLIER REVISION DATES

REVISION DATES (PRELIMINARY STAGE ONLY) 10/30/03 8/28/04 10/28/04 2/18/05 6/24/05 11/14/05 1/31/06 4/17/06 7/28/06 7/31/08

SHEET 106 OF 224

USERNAME => LAN DATE PLOTTED => 8/5/2008 TIME PLOTTED => 8:41:33 AM

To get to the Caltrans web site, go to: http://www.dot.ca.gov

DIST.	COUNTY	ROUTE	KILOMETER POST TOTAL PROJECT	SHEET NO.	TOTAL SHEETS
04	Ala	80	1.6/2.7	220R1	643

Caltrans Metric

REGISTERED ENGINEER - CIVIL

1-29-07
PLANS APPROVAL DATE

REGISTERED PROFESSIONAL ENGINEER MOHAN S. CHAR No. C057894 Exp. 6/30/08 CIVIL STATE OF CALIFORNIA

The State of California or its officers or agents shall not be responsible for the accuracy or completeness of electronic copies of this plan sheet.

T.Y. LIN / MOFFATT & NICHOL
TWO HARRISON STREET, SUITE 500
SAN FRANCISCO, CA 94105

LIM & NASCIMENTO ENGINEERING CORPORATION
12 MAUCHLY, BLDG L
IRVINE, CA 92618

Notes:

1. Girder stem and deck reinforcement not shown for clarity.
2. Spiral reinforcement details have not been shown. The manufacturer shall provide the required spiral reinf for anchorage used.
3. Place all reinforcement to clear tendon ducts.

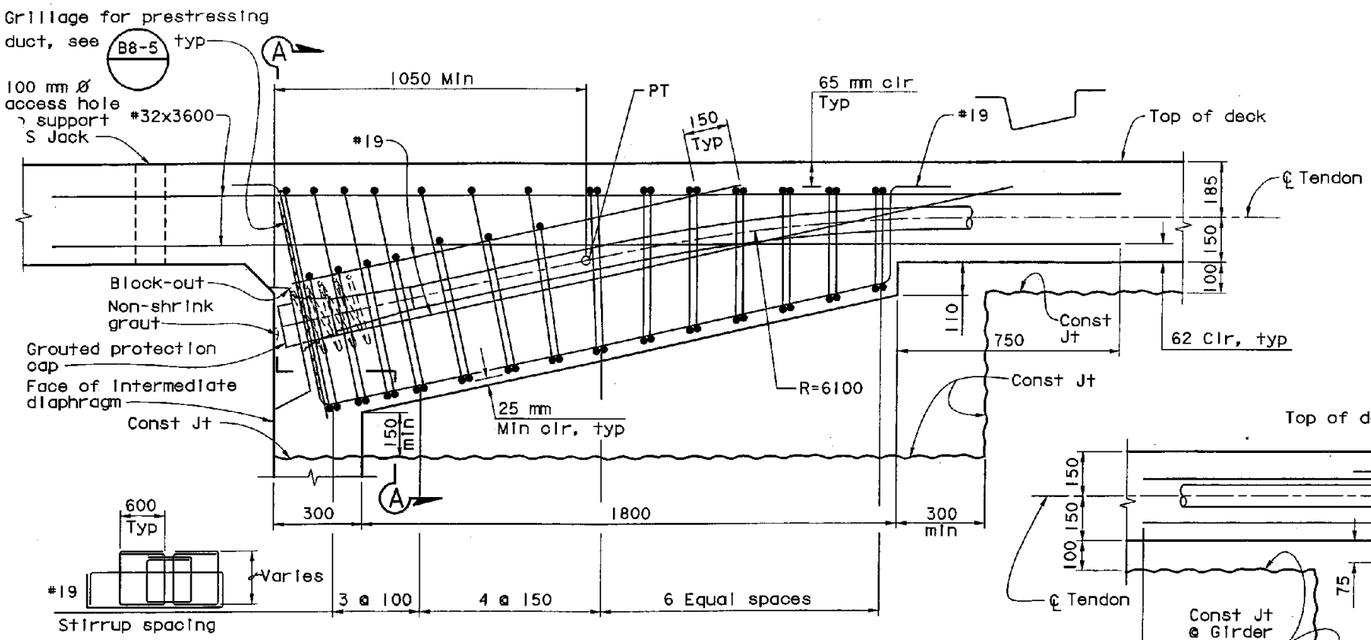

ELEVATION - JACKING END BLOCK

1:10

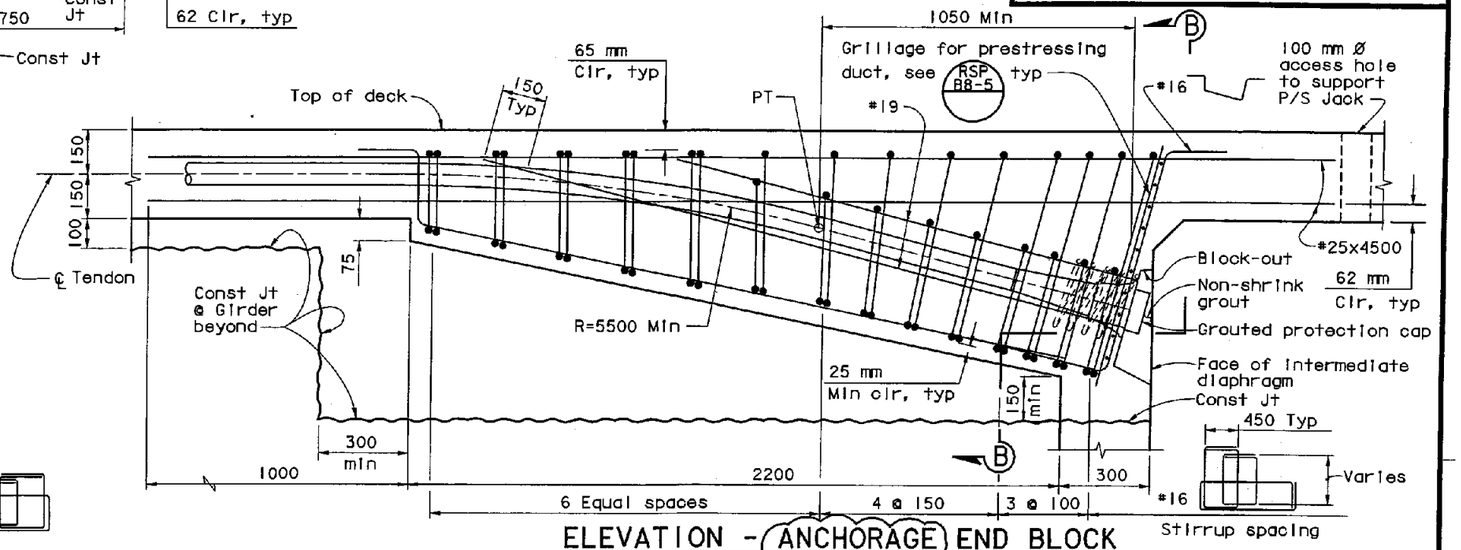

ELEVATION - ANCHORAGE END BLOCK

1:10

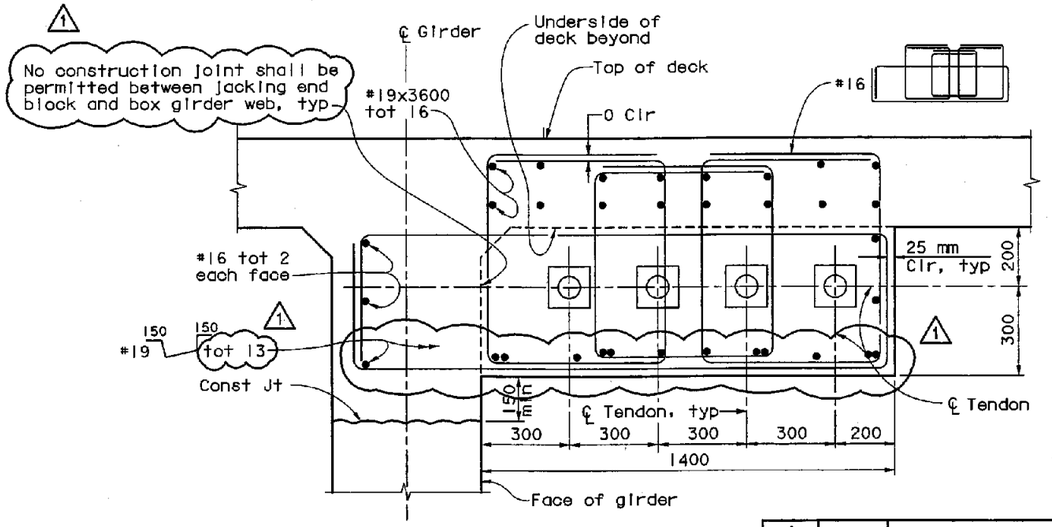

SECTION A-A

1:10

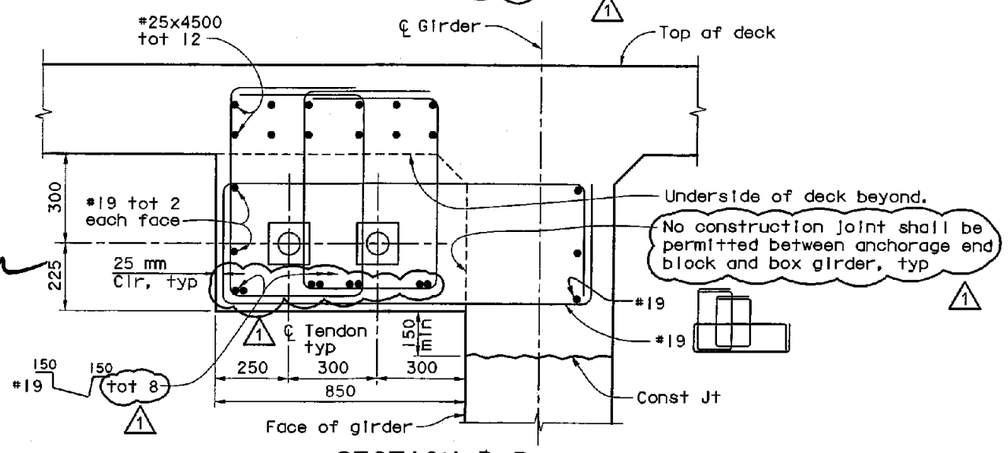

SECTION B-B

1:10

REGISTERED PROFESSIONAL ENGINEER MOHAN S. CHAR No. C057894 Exp. 6/30/10 CIVIL STATE OF CALIFORNIA

STAMP IS VALID FOR REVISION 1 ONLY

Note:
Dimensions shown may be changed to suit Contractor's prestressing system, subject to Engineer's approval.

MARK	DATE	REVISION(S)	BY	CH'D
1	7/31/08	JACKING & ANCHORAGE ENDS REVERSED	MSC	TWD
		DESCRIPTIONS		

CONTRACT CHANGE ORDER NO. 62
SHEET 9 OF 22 4/6/09

ALL DIMENSIONS ARE IN MILLIMETERS UNLESS OTHERWISE SHOWN

DESIGN OVERSIGHT
SAM AKKAD FRANCISCO CARPIO BERNARD CHAN HASAN EL-NATUR
SIGN OFF DATE 8/6/2008

	BY	CHECKED
DESIGN	M. CHAR	T. DUDLEY
DETAILS	N. MORCILLO/M. ANDRASEK	M. CHAR
QUANTITIES	N. MORCILLO/Y. KIM	V. SIVAKOLUNDU/T. DUDLEY

PREPARED FOR THE STATE OF CALIFORNIA DEPARTMENT OF TRANSPORTATION

MOHAN S. CHAR
PROJECT ENGINEER

BRIDGE NO. 34-0006L/R
KILOMETER POST 1.6

SAN FRANCISCO OAKLAND BAY BRIDGE
EAST SPAN SEISMIC SAFETY PROJECT

OAKLAND APPROACH STRUCTURES - PHASE I

EASTBOUND DECK DETAILS NO. 3

Rev. Date: 5-12-08

ORIGINAL SCALE IN MILLIMETERS FOR REDUCED PLANS 0 10 20 30 40 50 60 70 80 90 100

CU 04
EA 0120L1

DISREGARD PRINTS BEARING EARLIER REVISION DATES

REVISION DATES (PRELIMINARY STAGE ONLY) 10/30/03 8/20/04 10/28/04 2/18/05 6/24/05 11/14/05 1/31/06 4/17/06 7/28/06 7/31/08

SHEET 107 OF 224

USERNAME => LAN DATE PLOTTED => 8/5/2008 TIME PLOTTED => 8:43:46 AM

DIST	COUNTY	ROUTE	KILOMETER POST TOTAL PROJECT	SHEET NO.	TOTAL SHEETS
04	Ala	80	1.6/2.7	223R1	643

Caltrans Metric

Adam Wang
REGISTERED ENGINEER - CIVIL
1-29-07
PLANS APPROVAL DATE

REGISTERED PROFESSIONAL ENGINEER ADAM TM WANG No. 40402 Exp. 3-31-2007 CIVIL STATE OF CALIFORNIA

The State of California or its officers or agents shall not be responsible for the accuracy or completeness of electronic copies of this plan sheet.

T.Y. LIN / MOFFATT & NICHOL
TWO HARRISON STREET, SUITE 500
SAN FRANCISCO, CA 94105

W. KOO & ASSOCIATES, INC
625 THE CITY DRIVE SOUTH, SUITE 200
ORANGE, CA 92868

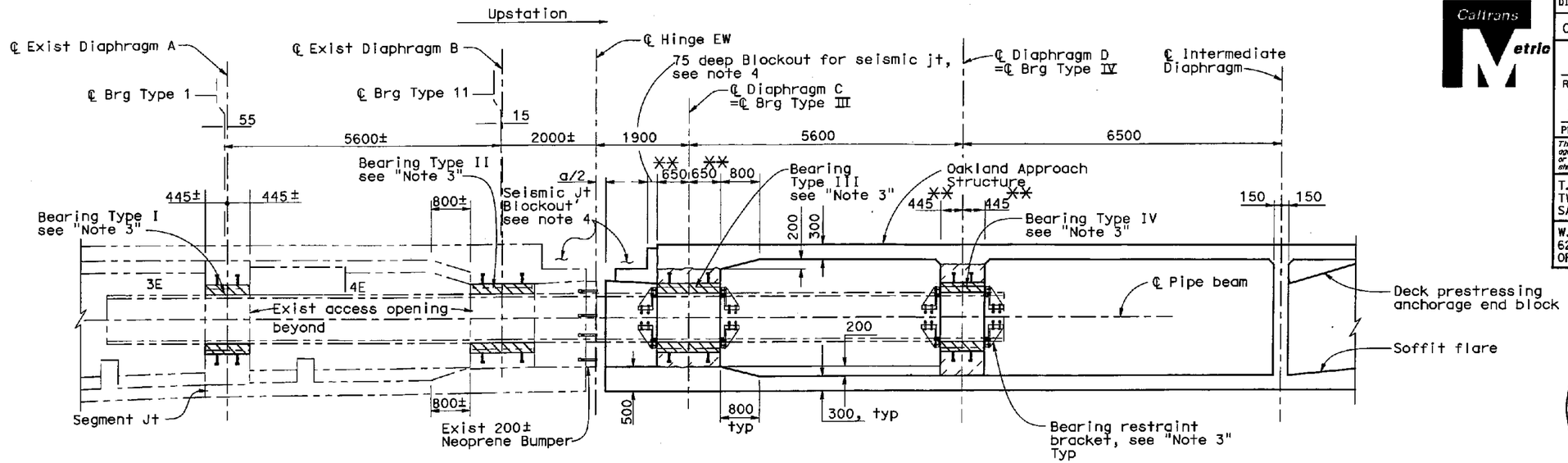

(Expansion Bearings) **SECTION A-A** (Fixed Bearings)
1:50

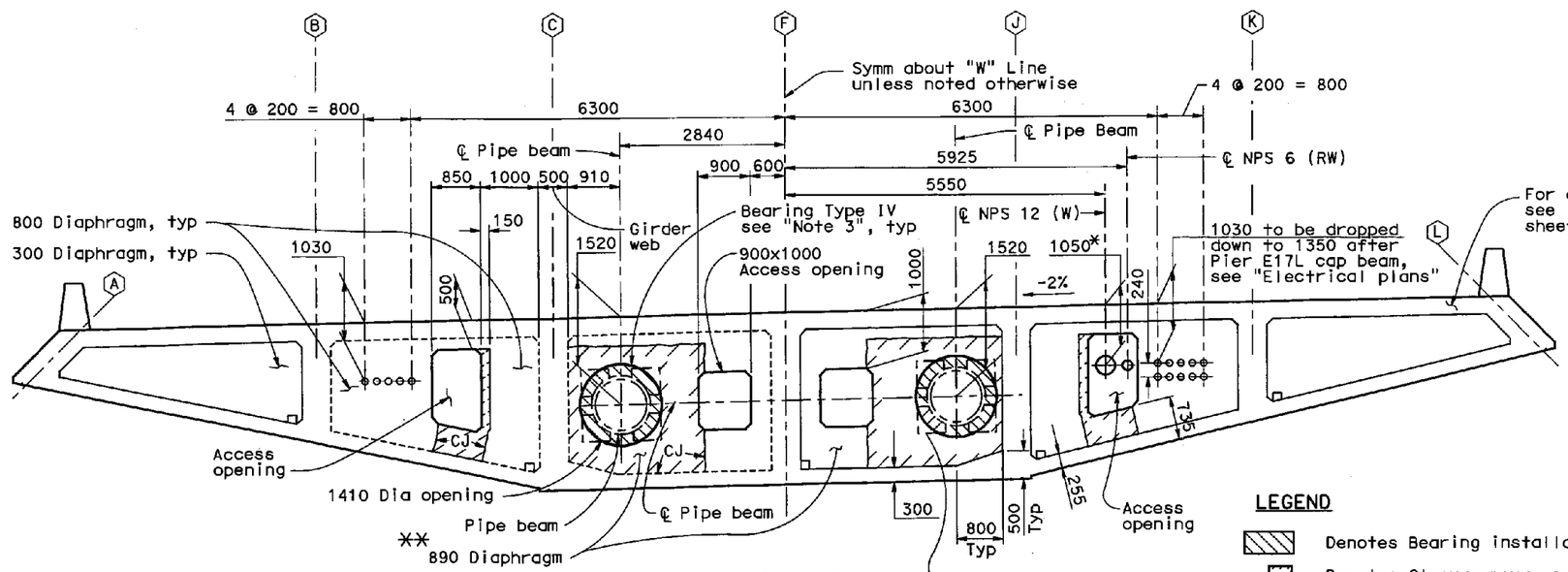

SECTION D-D
1:50

LEGEND

- Denotes Bearing installation
- Denotes Closure pour, see note 6
- (L) Denotes Girder designation
- * 1200 at Pier E22L
- ** Thickened Diaphragm between girders (C) & (J) only

Notes:

1. For construction of the hinge assembly, see "Construction Sequence at Hinge E" sheet.
2. For dimensions not shown, see "Westbound Hinge EW Details No.1" and "Westbound Hinge EW Details No.3".
3. Pipe beams, circular segmented bearings and bearing restraint brackets shown in final positions. Contractor shall install pipe beams, bearings and restraint brackets into final positions. For details of contract work at Hinge EW, see "Construction Sequence at Hinge E"sheet. For Bearing assemblies & grouted into final position, see "Hinge E Bearing Details No. 1 thru 5" sheets.
4. For "a" dimension and Seismic Jt blockout detail, see "Deck Joint Details" sheet.
5.
6. Concrete strength for closure pour shall be same as concrete strength for Bridge superstructure.

REGISTERED PROFESSIONAL ENGINEER VINH DIEU TRINH No. 50695 Exp. 9-30-2009 CIVIL STATE OF CALIFORNIA

STAMP IS VALID FOR REVISION 1 ONLY

MARK	DATE	DESCRIPTIONS	BY	CH'D	CCO#
1	7/21/08	NOTE 5 DELETED	VT	JSK	
		REVISIONS			

CONTRACT CHANGE ORDER NO. 62
SHEET 10 OF 22 4/10/09

Note:
The Contractor shall verify all controlling field dimensions before ordering or fabricating any material

ALL DIMENSIONS ARE IN MILLIMETERS UNLESS OTHERWISE SHOWN

DESIGN OVERSIGHT
SAM AKKAD FRANCISCO CARPIO BERNARD CHAN HASAN EL-NATUR
SIGN OFF DATE 7/23/08
Rev. Date: 5-18-98

	BY	CHECKED
DESIGN	X. Wu	V. Trinh
DETAILS	A. Segura	V. Trinh
QUANTITIES	C. Lin	D. Saretsky

PREPARED FOR THE STATE OF CALIFORNIA DEPARTMENT OF TRANSPORTATION

Adam Wang
PROJECT ENGINEER

CU 04
EA 0120L1

ORIGINAL SCALE IN MILLIMETERS FOR REDUCED PLANS 0 10 20 30 40 50 60 70 80 90 100

BRIDGE NO. 34-0006L/R
KILOMETER POST 1.6

DISREGARD PRINTS BEARING EARLIER REVISION DATES

REVISION DATES (PRELIMINARY STAGE ONLY) 6/20/04 10/20/04 2/18/05 5/24/05 11/17/05 1/31/06 4/13/06 7/20/06 11/16/06 7/21/08

SAN FRANCISCO OAKLAND BAY BRIDGE
EAST SPAN SEISMIC SAFETY PROJECT

OAKLAND APPROACH STRUCTURES-PHASE 1

WESTBOUND HINGE EW DETAILS NO.2

SHEET 110 OF 224

FILE => ti:\cad\320-19\21\CCO\AnchorageCCO\CC062-CLOUD\04-0120L1-34-006-n-hinge2.dgn

DIST	COUNTY	ROUTE	KILOMETER POST TOTAL PROJECT	SHEET NO.	TOTAL SHEETS
04	Ala	80	1.6/2.7	224R1	643

Caltrans Metric

Adam Wang
REGISTERED ENGINEER - CIVIL
1-29-07
PLANS APPROVAL DATE

REGISTERED PROFESSIONAL ENGINEER ADAM TM WANG No. 40402 Exp. 3-31-2007 CIVIL STATE OF CALIFORNIA

The State of California or its officers or agents shall not be responsible for the accuracy or completeness of electronic copies of this plan sheet.

T.Y. LIN / MOFFATT & NICHOL
TWO HARRISON STREET, SUITE 500
SAN FRANCISCO, CA 94105

W. KOO & ASSOCIATES, INC
625 THE CITY DRIVE SOUTH, SUITE 200
ORANGE, CA 92868

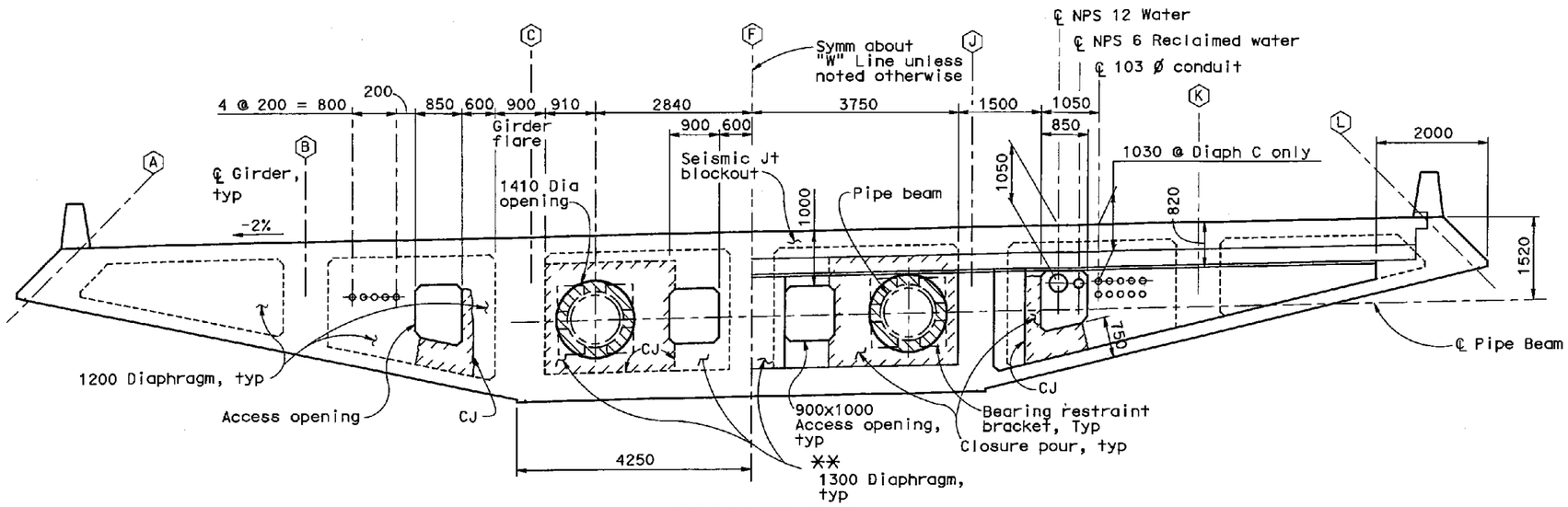

SECTION C-C
1:50

LEGEND

- Denotes Bearing installation
- Denotes Closure pour, see note 4
- (L) Denotes Girder designation
- ** Thickened Diaphragm between girders (C) & (J) only

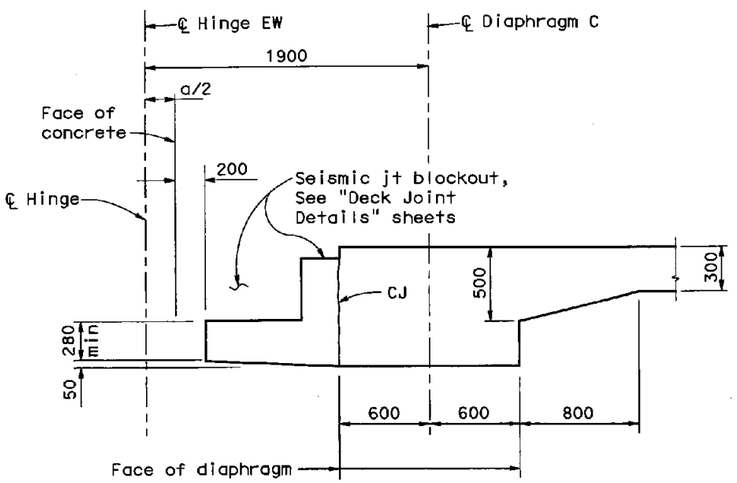

SECTION B-B
1:20

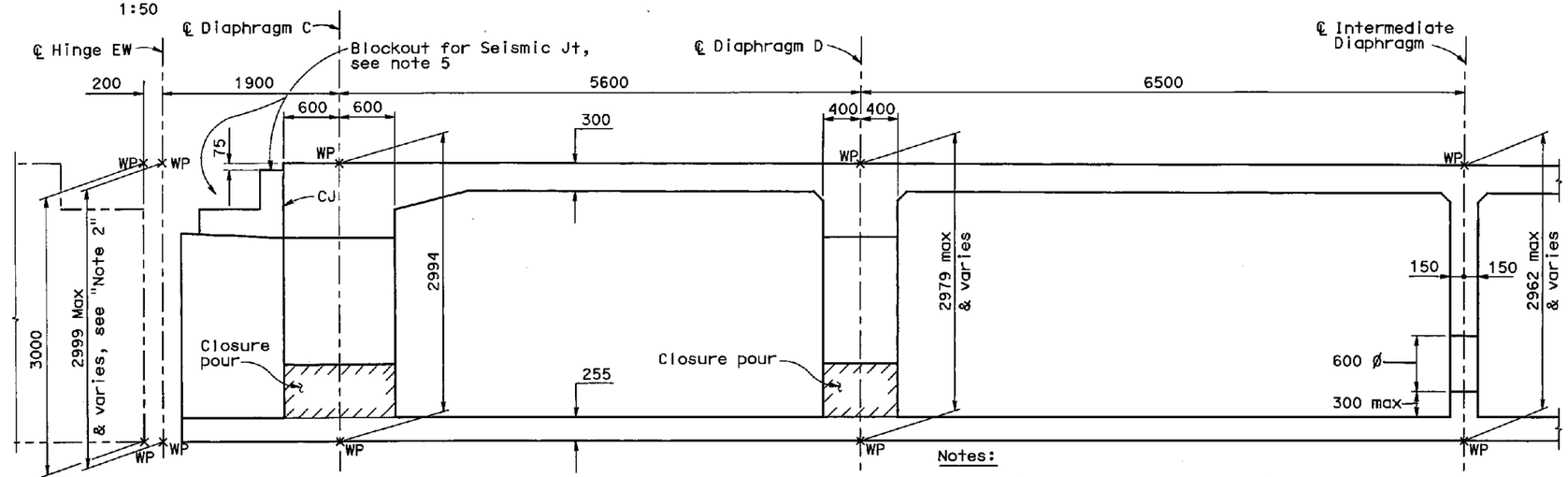

SECTION E-E
No Scale

Notes:

1. For dimensions not shown, see "Westbound Hinge EW Details No.1" and "Westbound Hinge EW Details No.2" sheets.
2. Working points (WP) are set based on 3.000 m at end of segment 4E in skyway structure and 2.500 m at ℄ Hinge EW.
3. (1) 7/21/08 NOTE 3 DELETED
4. Concrete strength for closure pour shall be same as concrete strength for Bridge superstructure.
5. For dimension "a" & Blockout details, see "Deck Joint Details" sheet.

MARK	DATE	DESCRIPTIONS	BY	CH'D	CCO#
1	7/21/08	NOTE 3 DELETED	VT	JSK	

REVISIONS

CONTRACT CHANGE ORDER NO. 62
SHEET 11 OF 22 4/6/09

REGISTERED PROFESSIONAL ENGINEER VINH DIEU TRINH No. 50685 Exp. 9-30-2009 CIVIL STATE OF CALIFORNIA

STAMP IS VALID FOR REVISION (1) ONLY

Note:
The Contractor shall verify all controlling field dimensions before ordering or fabricating any material

ALL DIMENSIONS ARE IN MILLIMETERS UNLESS OTHERWISE SHOWN

DESIGN OVERSIGHT
SAM AKKAD FRANCISCO CARPIO BERNARD CHAN HASAN EL-NATUR
SIGN OFF DATE 7/23/08

	BY	CHECKED
DESIGN	X. Wu	V. Trinh
DETAILS	A. Segura	V. Trinh
QUANTITIES	C. Lin	D. Saretsky

PREPARED FOR THE STATE OF CALIFORNIA DEPARTMENT OF TRANSPORTATION

Adam Wang
PROJECT ENGINEER

CU 04
EA 0120L1

BRIDGE NO. 34-0006L/R
KILOMETER POST 1.6

SAN FRANCISCO OAKLAND BAY BRIDGE
EAST SPAN SEISMIC SAFETY PROJECT

OAKLAND APPROACH STRUCTURES-PHASE 1

WESTBOUND HINGE EW DETAILS NO.3

DISREGARD PRINTS BEARING EARLIER REVISION DATES

REVISION DATES (PRELIMINARY STAGE ONLY) 8/20/04 10/22/04 2/28/05 5/24/05 11/04/05 1/31/06 4/12/06 7/20/06 11/14/06 7/21/08

SHEET 111 OF 224

ORIGINAL SCALE IN MILLIMETERS FOR REDUCED PLANS 0 10 20 30 40 50 60 70 80 90 100

Rev. Date: 5-18-98

FILE => t:\cad\320-19\21\CCO\AnchorageCCO\CC062-CLOUD\04-0120L1-34-006-n-bridge3.dgn

DIST	COUNTY	ROUTE	KILOMETER POST TOTAL PROJECT	SHEET NO.	TOTAL SHEETS
04	Ala	80	1.6/2.7	226R2	643

Caltrans Metric

Adam Wang
REGISTERED ENGINEER - CIVIL
1-29-07
PLANS APPROVAL DATE

REGISTERED PROFESSIONAL ENGINEER ADAM TM WANG No. 40402 Exp. 3-31-2007 CIVIL STATE OF CALIFORNIA

The State of California or its officers or agents shall not be responsible for the accuracy or completeness of electronic copies of this plan sheet.

T.Y. LIN / MOFFATT & NICHOL
TWO HARRISON STREET, SUITE 500
SAN FRANCISCO, CA 94105

W. KOO & ASSOCIATES, INC
625 THE CITY DRIVE SOUTH, SUITE 200
ORANGE, CA 92868

PRESTRESSING NOTES

1. Post-tensioning characteristics assumed for design:

   Longitudinal prestressing strand (Girder and partial deck prestressing)

   Frame 1 - See "Westbound Girder layout No.1 & 2" sheets
   Frame 2 - See "Westbound Girder layout No.3 & 4" sheets
   Frame 1 Partial Deck - See "Westbound Deck Details No. 2 & 3" sheets

   Transverse Diaphragm prestressing strand

   Friction curvature coefficient : 0.25
   Friction wobble coefficient : 0.0007/m
   Anchor set : 10 mm

   Vertical Diaphragm Prestressing bars (Sheathed for Post-Tension & Grouting)

   Friction curvature coefficient : 0.20
   Friction wobble coefficient : 0.0007/m
   Anchor set : 2 mm

   Prestressing strands shall conform to ASTM A416, low relaxation, 7-wire strands.
   Guaranteed Ultimate Strength = 1860 MPa
   Prestressing bars shall conform to ASTM A722, Grade 1030.

2. At Frame 1, a minimum compressive strength of 43 MPa (f'ci) shall be attained in the concrete prior to stressing.

3. All transverse prestressing tendons shall be stressed to jacking forces as shown on "Westbound Hinge EW Details No. 6" sheet. (2)

4. All vertical high strength prestressing bars shall be stressed to jacking force equal to 1150 kN.

5. Ducts for longitudinal and transverse tendons shall consist of galvanized corrugated steel ducts. Prebent galvanized steel pipes shall be used for prestressing tendons with radius less than 10 m. Hairpin "u" bars shall be added as shown on "Detail 1" unless shown otherwise. (1)

6. All prestressing steel (transverse and vertical) in Diaphragms C & D shall be stressed after concrete has reached a minimum compressive strength of 43 MPa.
   The work shall proceed in the following stages:
   Stage 1. Stress vertical H.S. Bars to 100% Pjacks
   Stage 2: Stress Tendons C1 & C4 to 100% Pjack.
   Stage 3: Stress Tendons C2, C3, D2 & D3 to 100% Pjack; sequence to minimize eccentricity.
   Stage 4: Cast concrete in anchorage blockouts (Minimum compressive strength shall be 43 MPa.)

7. After concrete in anchorage blockouts in Diaphragms C & D has reached required minimum strength, stress Frame 1 Pier caps/Girders/Deck tendons.

8. Grout all ducts and H.S. Bars in Diaphragms C & D (Minimum strength of grout shall be 35 MPa).

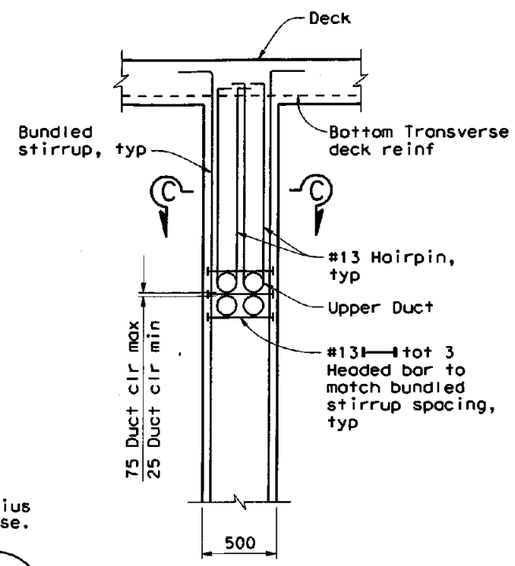

SECTION A-A
No Scale

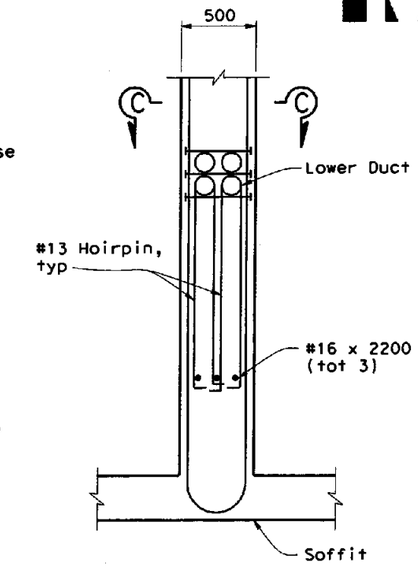

SECTION B-B
No Scale

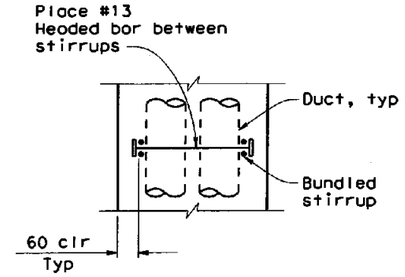

SECTION C-C
No Scale

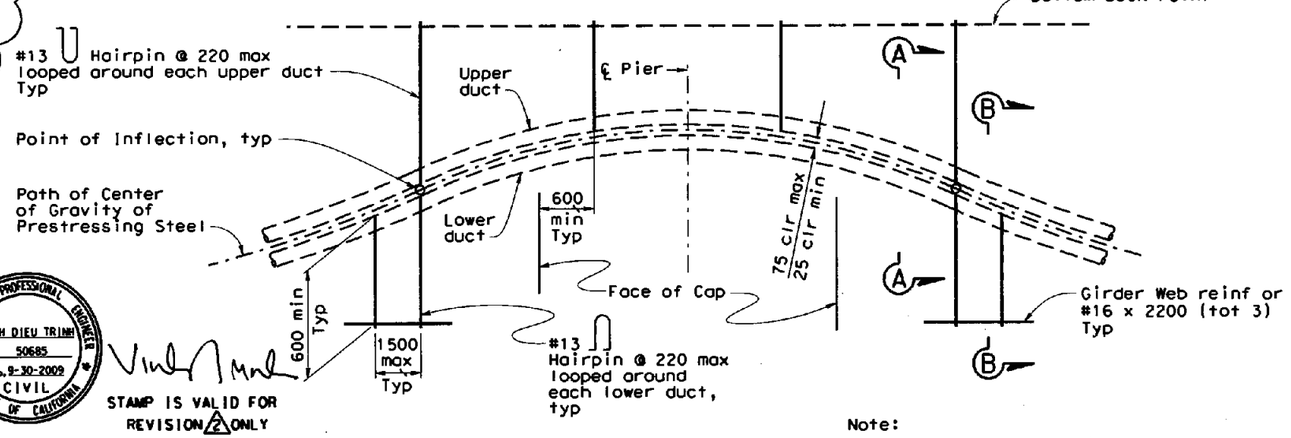

DETAIL 2
No Scale

Note:
Ducts are shown side by side for 2 rows layout. Other layout should be approved by Engineer.

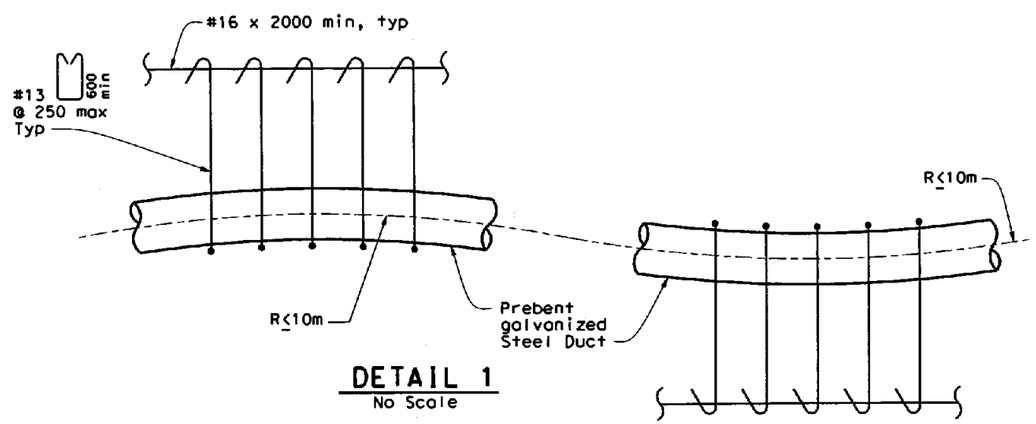

DETAIL 1
No Scale

REGISTERED PROFESSIONAL ENGINEER VINH DIEU TRINH No. 50685 Exp. 9-30-2009 CIVIL STATE OF CALIFORNIA

STAMP IS VALID FOR REVISION (2) ONLY

MARK	DATE	DESCRIPTIONS	BY	CH'D	CCO#
(1)	7/21/08	NOTE 6 REVISED, NOTES 7 & 8 ADDED	VT	JSK	
(2)	3/12/09	REVISED NOTES 3 & 4	VT	JSK	

REVISIONS

CONTRACT CHANGE ORDER NO. 62
SHEET 12 OF 22 4/6/09

Note:
The Contractor shall verify all controlling field dimensions before ordering or fabricating any material

ALL DIMENSIONS ARE IN MILLIMETERS UNLESS OTHERWISE SHOWN

SAN FRANCISCO OAKLAND BAY BRIDGE
EAST SPAN SEISMIC SAFETY PROJECT

OAKLAND APPROACH STRUCTURES-PHASE 1

WESTBOUND HINGE EW DETAILS NO. 5

DESIGN OVERSIGHT
SAM AKRAD FRANCISCO CARPIO BERNARD CHAN HASAN EL-HATUN
SIGN OFF DATE 3/20/2009

	BY	CHECKED
DESIGN	X. Wu	V. Trinh
DETAILS	A. Segura	V. Trinh
QUANTITIES	C. Lin	D. Saretsky

PREPARED FOR THE STATE OF CALIFORNIA DEPARTMENT OF TRANSPORTATION

Adam Wang
PROJECT ENGINEER

BRIDGE NO. 34-0006L/R
KILOMETER POST 1.6

CU 04
EA 0120L1

DISREGARD PRINTS BEARING EARLIER REVISION DATES

REVISION DATES (PRELIMINARY STAGE ONLY) 10/10/03 8/30/04 10/25/04 2/18/05 5/24/05 11/14/05 1/13/06 4/13/06 3/28/06 7/21/08

SHEET 113R2 OF 224

Rev. Date: 5-18-98

ORIGINAL SCALE IN MILLIMETERS FOR REDUCED PLANS 0 10 20 30 40 50 60 70 80 90 100

DIST	COUNTY	ROUTE	KILOMETER POST TOTAL PROJECT	SHEET NO.	TOTAL SHEETS
04	Ala	80	1.6/2.7	227R1	643

Caltrans Metric

Adam Wang
REGISTERED ENGINEER - CIVIL
1-29-07
PLANS APPROVAL DATE

REGISTERED PROFESSIONAL ENGINEER ADAM TM WANG No. 40402 Exp. 3-31-2007 CIVIL STATE OF CALIFORNIA

The State of California or its officers or agents shall not be responsible for the accuracy or completeness of electronic copies of this plan sheet.

T.Y. LIN / MOFFATT & NICHOL
TWO HARRISON STREET, SUITE 500
SAN FRANCISCO, CA 94105

W. KOO & ASSOCIATES, INC
625 THE CITY DRIVE SOUTH, SUITE 200
ORANGE, CA 92868

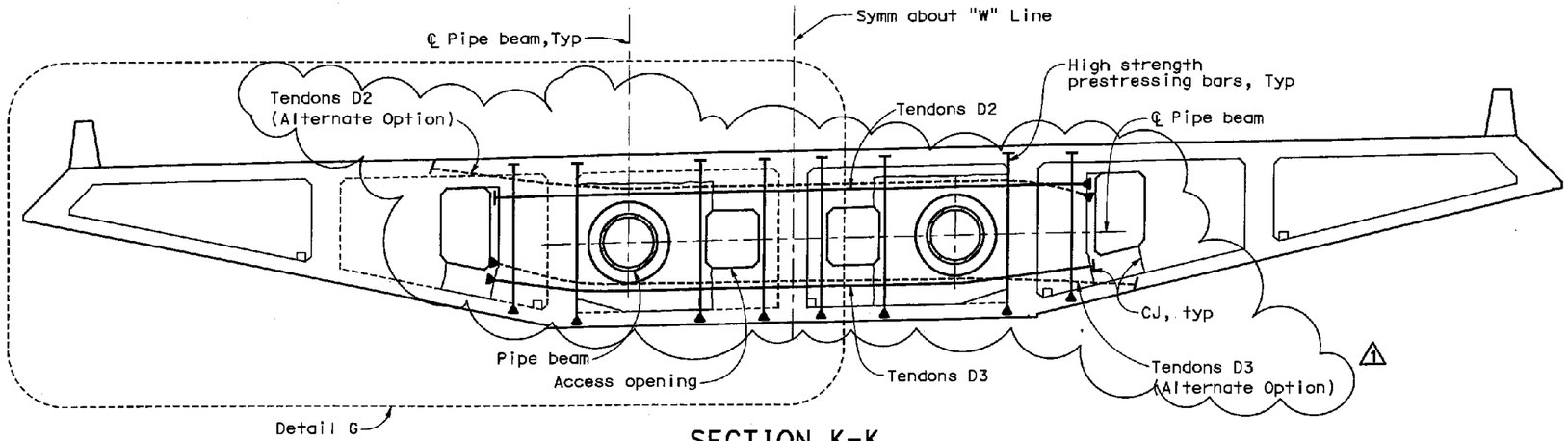

SECTION K-K
1:50

MARK	DATE	DESCRIPTIONS	BY	CH'D	CCO#
1	7/21/08	ALTERNATE STRESSING OPTIONS ADDED	VT	JSK	

REVISIONS

REGISTERED PROFESSIONAL ENGINEER VINH DIEU TRINH No. 50685 Exp. 9-30-2009 CIVIL STATE OF CALIFORNIA

STAMP IS VALID FOR REVISION 1 ONLY

CONTRACT CHANGE ORDER NO. 62
SHEET 13 OF 22 4/6/09

Diaphragm	Tendon	No. of tendon* x No. of strands	Pjack = Jacking force per tendon (kN)
C	C1	2x16	3130
	C2	2x20	3910
	C3	2x18	3520
	C4	1x27	5280
D	D2	2x9	1760
	D3	2x9	1760

* per diaphragm

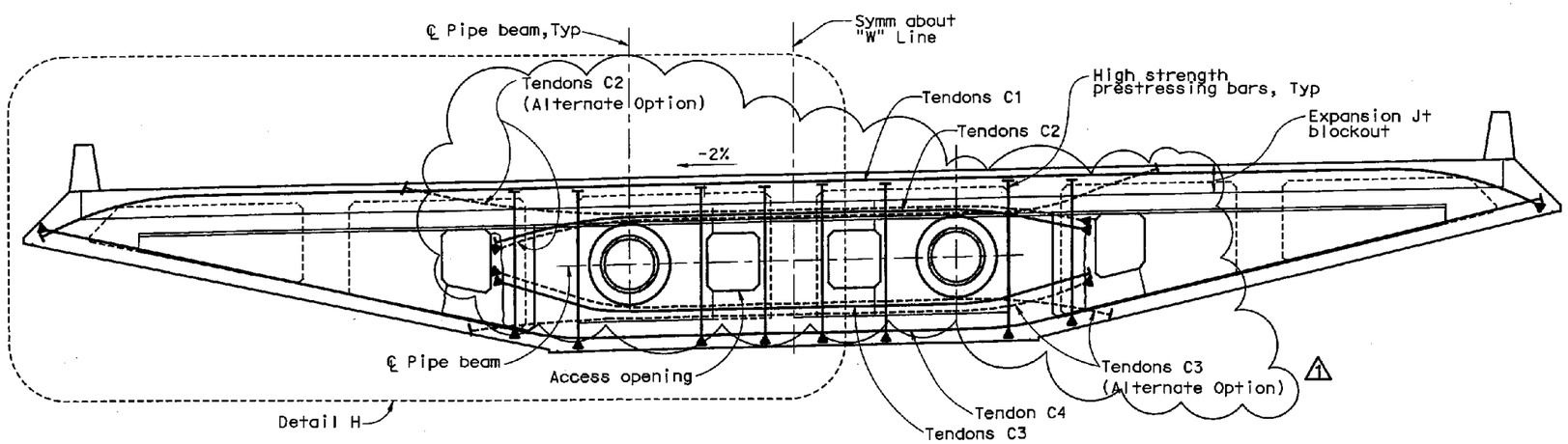

SECTION L-L
1:50

NOTES:

1. For Details G and H, see "Westbound Hinge EW Details No. 7" and "Westbound Hinge EW Details No. 8" sheets.
2. Anchorage symbols are as follows:
   - ⊢ Jacking end
   - ⊢ Anchorage end
3. For prestressing notes, see "Westbound Hinge EW Details No. 5" sheet.

Note:
The Contractor shall verify all controlling field dimensions before ordering or fabricating any material

ALL DIMENSIONS ARE IN MILLIMETERS UNLESS OTHERWISE SHOWN

DESIGN OVERSIGHT
SAM AKKAD FRANCISCO CARPIO BERNARD CHAN HASAN EL-NATUR
SIGN OFF DATE 7/23/08

	BY	CHECKED
DESIGN	X. Wu	V. Trinh
DETAILS	A. Segura	V. Trinh
QUANTITIES	C. Lin	D. Saretsky

PREPARED FOR THE STATE OF CALIFORNIA DEPARTMENT OF TRANSPORTATION

Adam Wang
PROJECT ENGINEER

CU 04
EA 0120L1

BRIDGE NO. 34-0006L/R
KILOMETER POST 1.6

SAN FRANCISCO OAKLAND BAY BRIDGE
EAST SPAN SEISMIC SAFETY PROJECT

OAKLAND APPROACH STRUCTURES-PHASE 1

WESTBOUND HINGE EW DETAILS NO.6

DISREGARD PRINTS BEARING EARLIER REVISION DATES

REVISION DATES (PRELIMINARY STAGE ONLY) 10/20/03 8/20/04 10/20/04 2/18/05 6/24/05 11/04/05 1/31/06 4/17/06 7/28/06 7/21/08

SHEET 114 OF 224

Rev. Date: 5-18-98

ORIGINAL SCALE IN MILLIMETERS FOR REDUCED PLANS 0 10 20 30 40 50 60 70 80 90 100

FILE => t:\cad\320-19\21\CCO\AnchorageCCO\CC062-CLOUD\04-0120L1-34-006-n-hinge6.dgn

USERNAME => T8781 DATE PLOTTED => 8DATE TIME PLOTTED => 8TIME

DIST	COUNTY	ROUTE	KILOMETER POST TOTAL PROJECT	SHEET NO.	TOTAL SHEETS
04	Ala	80	1.6/2.7	228R1	643

Caltrans Metric

Adam Wang
REGISTERED ENGINEER - CIVIL
1-29-07
PLANS APPROVAL DATE

REGISTERED PROFESSIONAL ENGINEER ADAM TN WANG No. 40402 Exp. 3-31-2007 CIVIL STATE OF CALIFORNIA

The State of California or its officers or agents shall not be responsible for the accuracy or completeness of electronic copies of this plan sheet.

T.Y. LIN / MOFFATT & NICHOL
TWO HARRISON STREET, SUITE 500
SAN FRANCISCO, CA 94105

W. KOO & ASSOCIATES, INC
625 THE CITY DRIVE SOUTH, SUITE 200
ORANGE, CA 92868

REGISTERED PROFESSIONAL ENGINEER VINH DIEU TRINH No. 50685 Exp. 9-30-2009 CIVIL STATE OF CALIFORNIA

STAMP IS VALID FOR REVISION 1 ONLY

MARK	DATE	DESCRIPTIONS	BY	CH'D	CCO#
1	7/21/08	ALTERNATE STRESSING OPTION NOTE ADDED	VT	JSK	

REVISIONS

CONTRACT CHANGE ORDER NO. 62
SHEET 14 OF 22 4/6/09

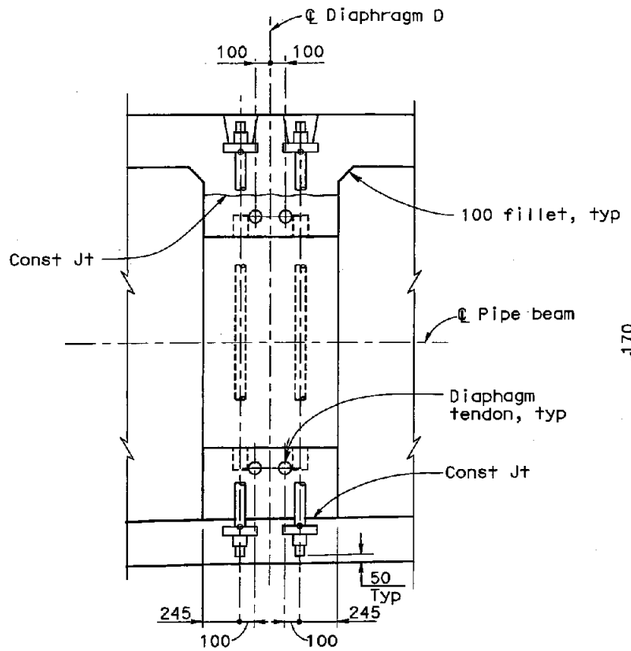

SECTION P-P
1:20

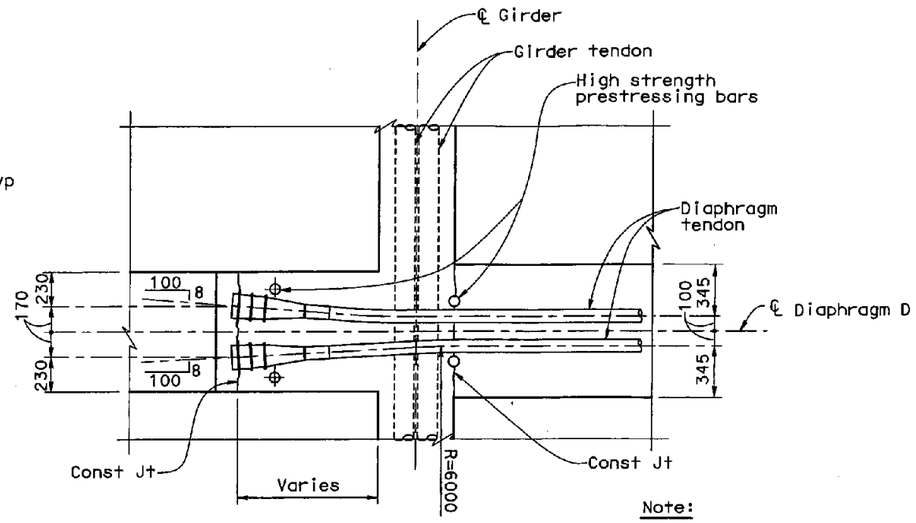

SECTION Q-Q
1:20

Note:
1. Radii for all curved tendons are 6000 Min unless shown otherwise.

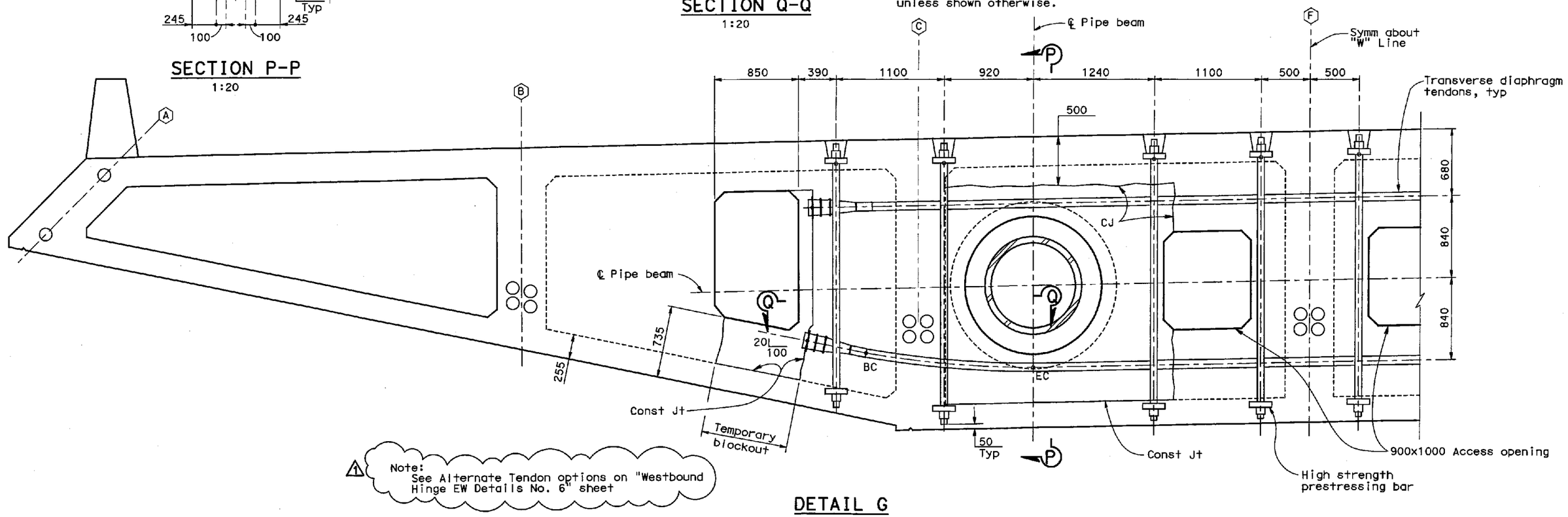

DETAIL G
1:20

Note:
The Contractor shall verify all controlling field dimensions before ordering or fabricating any material

ALL DIMENSIONS ARE IN MILLIMETERS UNLESS OTHERWISE SHOWN

SAN FRANCISCO OAKLAND BAY BRIDGE
EAST SPAN SEISMIC SAFETY PROJECT

OAKLAND APPROACH STRUCTURES-PHASE 1

WESTBOUND HINGE EW DETAILS NO.7

DESIGN OVERSIGHT			
SAM AKKAD	FRANCISCO CARPIO	BERNARD CHAN	HASAN EL-NATUR
SIGN OFF DATE	7/23/08		

	BY	CHECKED
DESIGN	X. Wu	V. Trinh
DETAILS	A. Segura	V. Trinh
QUANTITIES	C. Lin	D. Saretsky

PREPARED FOR THE STATE OF CALIFORNIA DEPARTMENT OF TRANSPORTATION

Adam Wang
PROJECT ENGINEER

BRIDGE NO. 34-0006L/R
KILOMETER POST 1.6

CU 04
EA 0120L1

DISREGARD PRINTS BEARING EARLIER REVISION DATES

REVISION DATES (PRELIMINARY STAGE ONLY) 10/20/03 8/20/04 10/20/04 2/15/05 5/24/05 11/14/05 1/13/06 4/17/06 7/28/06 7/21/08

SHEET 115 OF 224

ORIGINAL SCALE IN MILLIMETERS FOR REDUCED PLANS 0 10 20 30 40 50 60 70 80 90 100

Rev. Date: 5-18-98

USERNAME => 18781 DATE PLOTTED => $DATE TIME PLOTTED => $TIME

[FILE => t:\cad\320-19\21\CCO\Anchorage\CCO62-CLOUD\04-0120L1-34-006-p-hinge7.dgn]

DIST	COUNTY	ROUTE	KILOMETER POST TOTAL PROJECT	SHEET NO.	TOTAL SHEETS
04	Ala	80	1.6/2.7	229R1	643

Caltrans Metric

Adam Wang
REGISTERED ENGINEER - CIVIL
1-29-07
PLANS APPROVAL DATE

REGISTERED PROFESSIONAL ENGINEER ADAM TM WANG No. 40402 Exp. 3-31-2007 CIVIL STATE OF CALIFORNIA

The State of California or its officers or agents shall not be responsible for the accuracy or completeness of electronic copies of this plan sheet.

T.Y. LIN / MOFFATT & NICHOL
TWO HARRISON STREET, SUITE 500
SAN FRANCISCO, CA 94105

W. KOO & ASSOCIATES, INC
625 THE CITY DRIVE SOUTH, SUITE 200
ORANGE, CA 92868

MARK	DATE	DESCRIPTIONS	BY	CH'D	CCO#
1	7/21/08	ALTERNATE STRESSING OPTION NOTE ADDED	VT	JSK	

REVISIONS

REGISTERED PROFESSIONAL ENGINEER VINH DIEU TRINH No. 50685 Exp. 9-30-2009 CIVIL STATE OF CALIFORNIA

STAMP IS VALID FOR REVISION 1 ONLY

CONTRACT CHANGE ORDER NO. 62
SHEET 15 OF 22 4/6/09

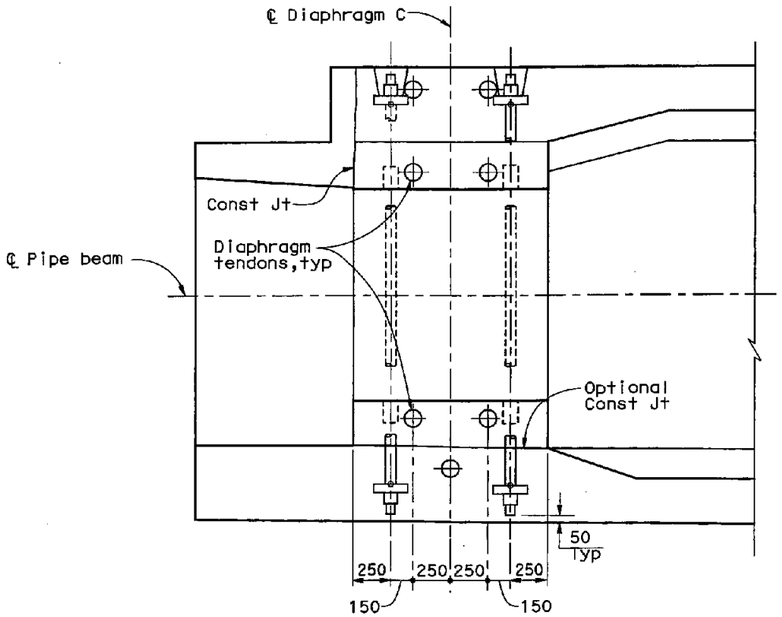

SECTION R-R
1:20

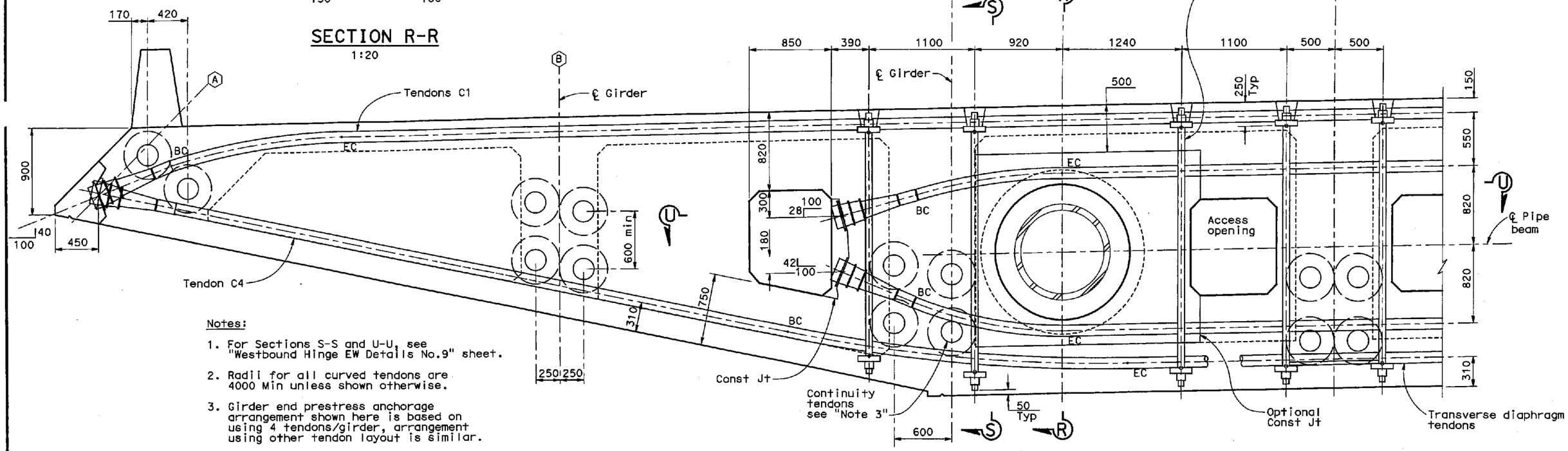

Notes:

1. For Sections S-S and U-U, see "Westbound Hinge EW Details No.9" sheet.
2. Radii for all curved tendons are 4000 Min unless shown otherwise.
3. Girder end prestress anchorage arrangement shown here is based on using 4 tendons/girder, arrangement using other tendon layout is similar.

DETAIL H
1:20

Note:
The Contractor shall verify all controlling field dimensions before ordering or fabricating any material

ALL DIMENSIONS ARE IN MILLIMETERS UNLESS OTHERWISE SHOWN

SAN FRANCISCO OAKLAND BAY BRIDGE
EAST SPAN SEISMIC SAFETY PROJECT

OAKLAND APPROACH STRUCTURES-PHASE 1

WESTBOUND HINGE EW DETAILS NO.8

BRIDGE NO. 34-0006L/R
KILOMETER POST 1.6

Adam Wang
PROJECT ENGINEER

DESIGN OVERSIGHT
SAM AKKAD FRANCISCO CARPIO BERNARD CHAN HASAN EL-NATUR
SIGN OFF DATE 7/23/08

	BY	CHECKED
DESIGN	X. Wu	V. Trinh
DETAILS	A. Segura	V. Trinh
QUANTITIES	C. Lin	D. Saretsky

PREPARED FOR THE STATE OF CALIFORNIA DEPARTMENT OF TRANSPORTATION

CU 04
EA 0120L1

DISREGARD PRINTS BEARING EARLIER REVISION DATES

REVISION DATES (PRELIMINARY STAGE ONLY) 10/28/05 8/22/04 10/25/04 2/18/05 6/24/05 11/14/05 1/31/06 4/3/06 7/28/06 7/21/08

SHEET 116 OF 224

Rev. Dates 5-18-98

ORIGINAL SCALE IN MILLIMETERS FOR REDUCED PLANS 0 10 20 30 40 50 60 70 80 90 100

FILE => t:\cad\320-18\21\CCO\AnchorageCCO\CC062-CLOUD\04-012011-34-006a-hinge8.dgn

USERNAME => 16781 DATE PLOTTED => $DATE TIME PLOTTED => $TIME

DIST.	COUNTY	ROUTE	KILOMETER POST TOTAL PROJECT	SHEET NO.	TOTAL SHEETS
04	Ala	80	1.6/2.7	239R1	643

REGISTERED ENGINEER - CIVIL

1-29-07
PLANS APPROVAL DATE

The State of California or its officers or agents shall not be responsible for the accuracy or completeness of electronic copies of this plan sheet.

T.Y. LIN / MOFFATT & NICHOL
TWO HARRISON STREET, SUITE 500
SAN FRANCISCO, CA 94105

LIM & NASCIMENTO ENGINEERING CORPORATION
12 MAUCHLY, BLDG L
IRVINE, CA 92618

STAMP IS VALID FOR REVISION 1 ONLY

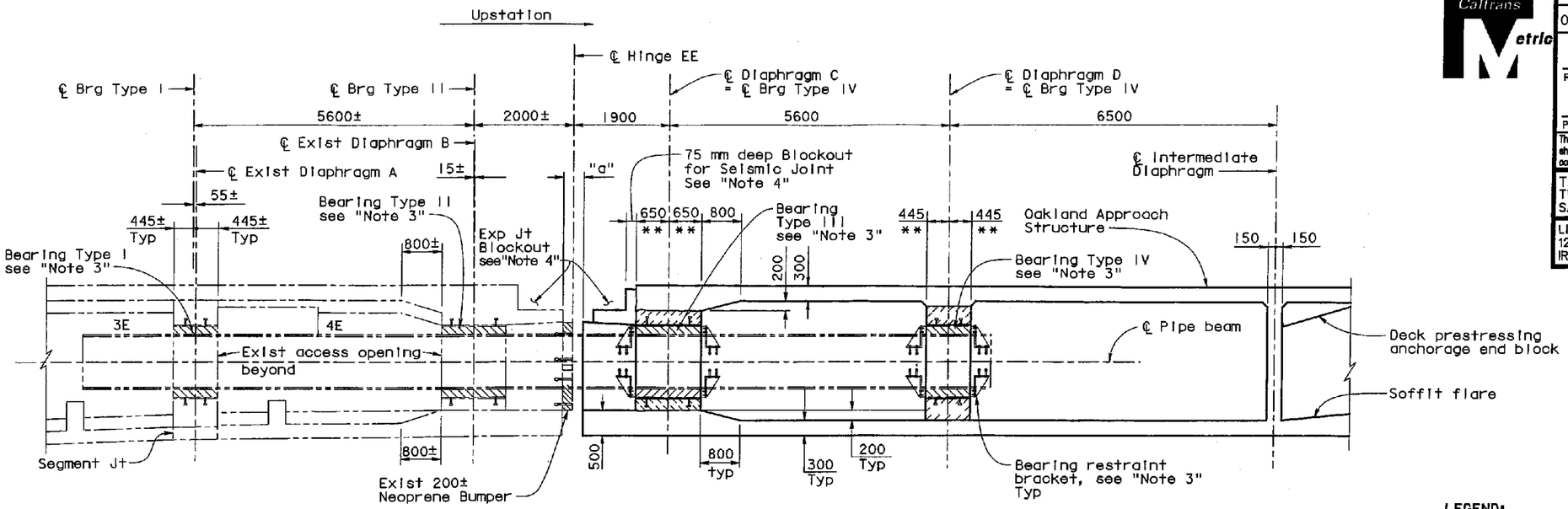

SECTION A-A

1:50

MARK	DATE	REVISION(S)	BY	CH'D
1	7/31/08	NOTE 5 DELETED; CONTRACTOR TO VERIFY DIMENSIONS IN FIELD NOTE ADDED	MSC	TWD

DESCRIPTIONS

CONTRACT CHANGE ORDER NO. 62
SHEET 16 OF 22 4/6/09

LEGEND:

- Denotes Closure Pour, see "Note 6"
- Denotes Bearing & Grout Installation
- (A) — Denotes Grid designation
- ** — Denotes Thickened Diaphragm between Girders (C) & (J) only
- * — 1200 at Pier E22R

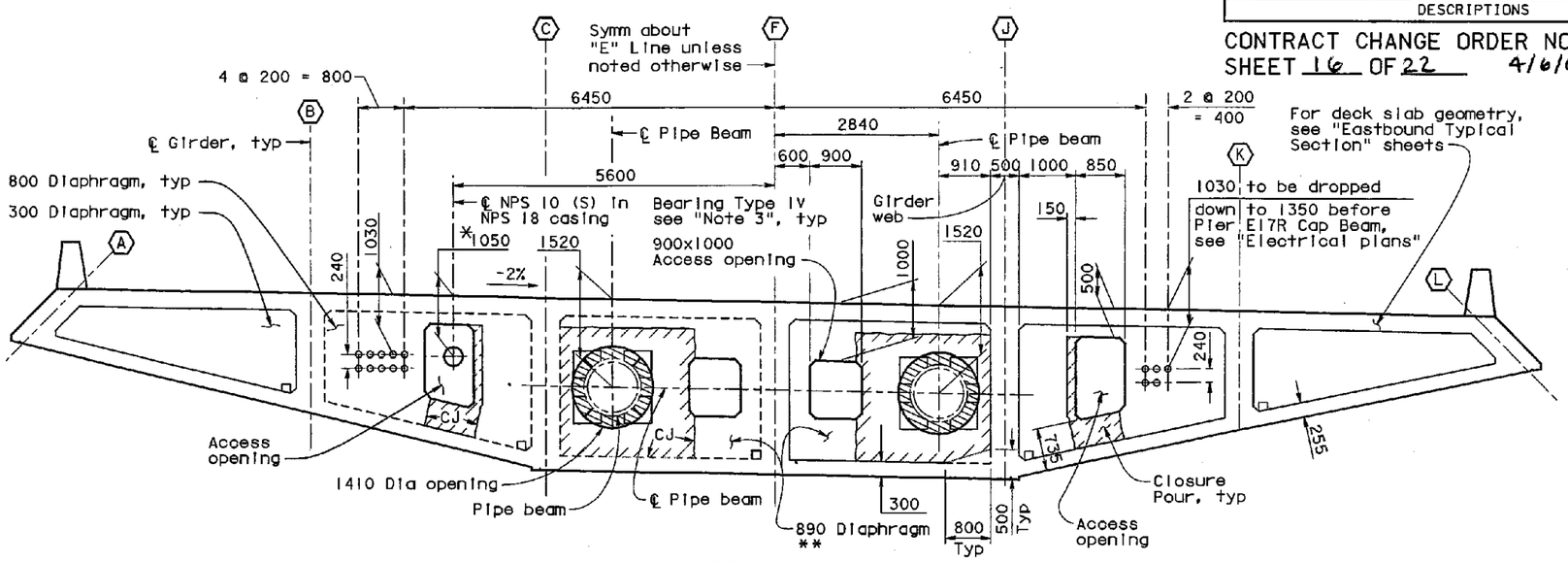

SECTION D-D

1:50

Notes:

1. For construction of the hinge assembly, see "Construction Sequence at Hinge E" sheet.
2. For dimensions not shown, see "Eastbound Hinge EE Details No. 1" and "Eastbound Hinge EE Details No. 3".
3. Pipe beams, circular segmented bearings and bearing restraint brackets shown in final positions. Contractor shall install pipe beams, bearings and restraint brackets into final positions. For details of contract work at Hinge EE, see "Construction Sequence at Hinge E"sheet. For Bearing assemblies grouted into final position, see "Hinge E Bearing Details No. 1 through No. 5" sheets.
4. For "a" dimension and Expansion Joint blockout detail, see "Deck Joint Details" sheet.

1

6. Concrete strength for closure pour shall be same as concrete strength for bridge superstructure.

1

Note: The Contractor shall verify all controlling field dimensions before ordering or fabricating any material.

ALL DIMENSIONS ARE IN MILLIMETERS UNLESS OTHERWISE SHOWN

DESIGN OVERSIGHT
SAM AKKAD FRANCISCO CARPIO BERNARD CHAR HASAN EL-NATUR
SIGN OFF DATE 8/6/2008

	BY	CHECKED
DESIGN	M. CHAR	T. DUDLEY
DETAILS	N. MORCILLO/M. ANDRASEK	M. CHAR
QUANTITIES	N. MORCILLO/Y. KIM	V.SIVAKOLUNDU/T. DUDLEY

PREPARED FOR THE STATE OF CALIFORNIA DEPARTMENT OF TRANSPORTATION

MOHAN S. CHAR
PROJECT ENGINEER

BRIDGE NO. 34-0006L/R
KILOMETER POST 1.6

SAN FRANCISCO OAKLAND BAY BRIDGE
EAST SPAN SEISMIC SAFETY PROJECT

OAKLAND APPROACH STRUCTURES - PHASE I

EASTBOUND HINGE EE DETAILS NO. 2

Rev. Date: 5-18-98

ORIGINAL SCALE IN MILLIMETERS FOR REDUCED PLANS 0 10 20 30 40 50 60 70 80 90 100

CU 04
EA 0120L1

DISREGARD PRINTS BEARING EARLIER REVISION DATES

REVISION DATES (PRELIMINARY STAGE ONLY) 8/20/04 10/28/04 2/12/05 5/24/05 11/14/05 1/31/06 4/17/06 7/28/06 11/08/06 7/31/08

SHEET 126 OF 224

DATE PLOTTED => 8/5/2008
USERNAME => LAN

DIST.	COUNTY	ROUTE	KILOMETER POST TOTAL PROJECT	SHEET NO.	TOTAL SHEETS
04	Ala	80	1.6/2.7	240R1	643

Caltrans Metric

REGISTERED ENGINEER - CIVIL

1-29-07
PLANS APPROVAL DATE

REGISTERED PROFESSIONAL ENGINEER MOHAN S. CHAR No. C057894 Exp. 6/30/08 CIVIL STATE OF CALIFORNIA

The State of California or its officers or agents shall not be responsible for the accuracy or completeness of electronic copies of this plan sheet.

T.Y. LIN / MOFFATT & NICHOL
TWO HARRISON STREET, SUITE 500
SAN FRANCISCO, CA 94105

LIM & NASCIMENTO ENGINEERING CORPORATION
12 MAUCHLY, BLDG L
IRVINE, CA 92618

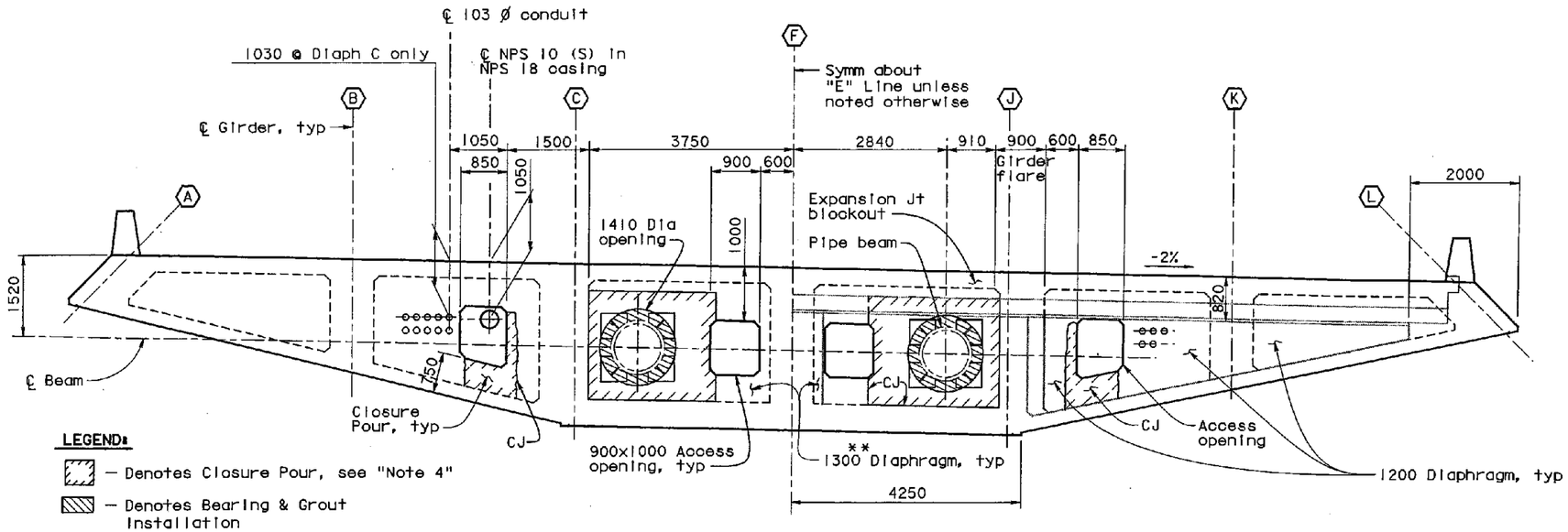

LEGEND:

- Denotes Closure Pour, see "Note 4"
- Denotes Bearing & Grout Installation
- (A) – Denotes Girder designation
- ** – Denotes thickened Diaphragm between Girders (C) & (J) only

SECTION C-C
1:50

Notes:

1. For dimensions not shown, see "Eastbound Hinge EE Details No. 1" and "Eastbound Hinge EE Details No. 2" sheets.
2. Working points (WP) are set based on 3.000 m at end of segment 4E in skyway structure and 2.500 m at "℄ Hinge FE".

(1)

4. Concrete strength for closure pour shall be same as concrete strength for bridge superstructure.
5. For Dimension "a" and Blockout Details, see "Deck Joint Details" sheet.

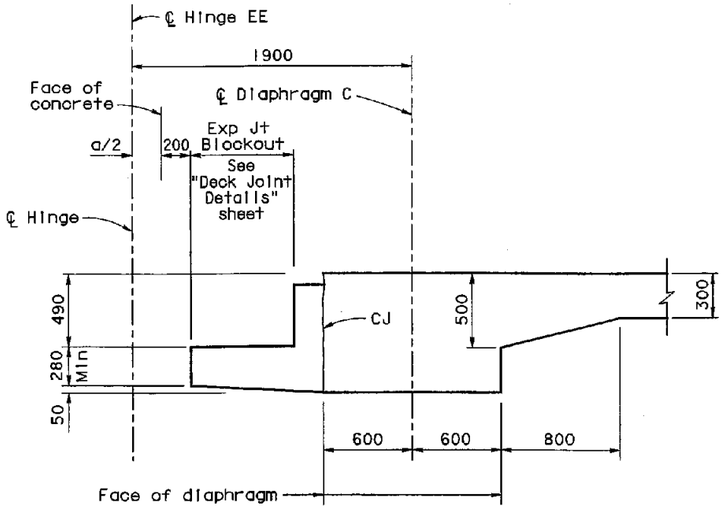

SECTION B-B
1:20

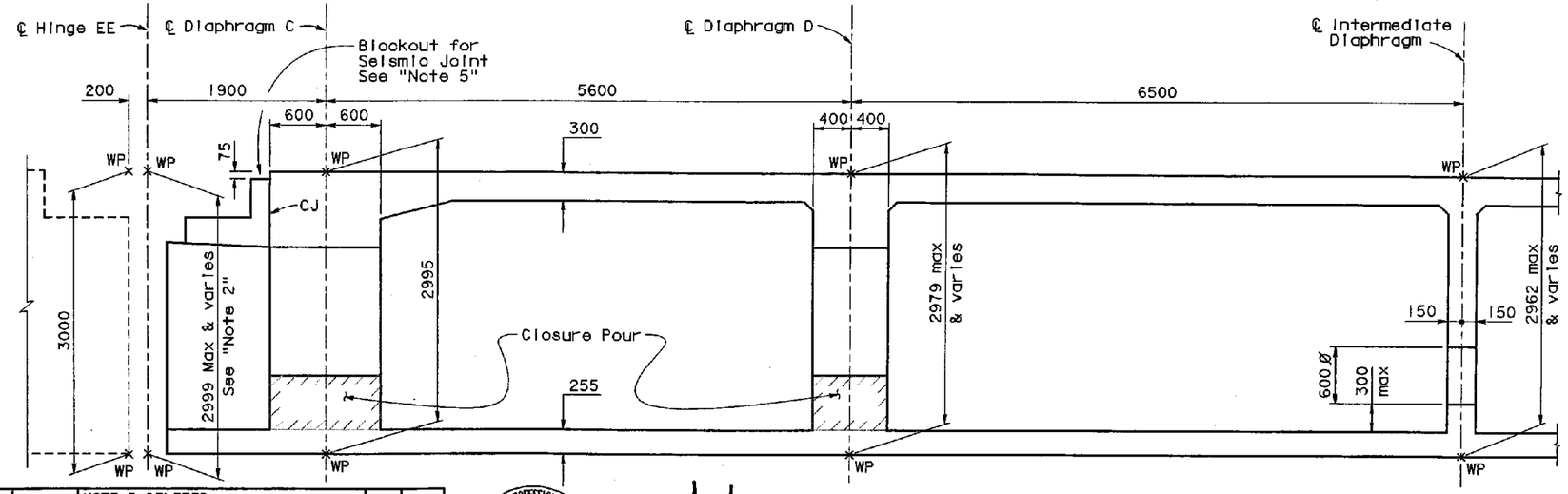

SECTION E-E
No Scale

(1) Note: The Contractor shall verify all controlling field dimensions before ordering or fabricating any material.

MARK	DATE	REVISION(S)	BY	CH'D
(1)	7/31/08	NOTE 3 DELETED; CONTRACTOR TO VERIFY DIMENSIONS IN FIELD NOTE ADDED	MSC	TWD
DESCRIPTIONS				

REGISTERED PROFESSIONAL ENGINEER MOHAN S. CHAR No. C057894 Exp. 6/30/10 CIVIL STATE OF CALIFORNIA

STAMP IS VALID FOR REVISION (1) ONLY

CONTRACT CHANGE ORDER NO. 02
SHEET 17 OF 22 4/6/09

ALL DIMENSIONS ARE IN MILLIMETERS UNLESS OTHERWISE SHOWN

DESIGN OVERSIGHT
SAM AKKAD FRANCISCO CARPIO BERNARD CHAN HASAN EL-NATUR
SIGN OFF DATE 8/6/2008

	BY	CHECKED
DESIGN	M. CHAR	T. DUDLEY
DETAILS	N. MORCILLO/M. ANDRASEK	M. CHAR
QUANTITIES	N. MORCILLO/Y. KIM	V. SIVAKOLUNDU/T. DUDLEY

PREPARED FOR THE STATE OF CALIFORNIA DEPARTMENT OF TRANSPORTATION

MOHAN S. CHAR
PROJECT ENGINEER

BRIDGE NO. 34-0006L/R
KILOMETER POST 1.6

SAN FRANCISCO OAKLAND BAY BRIDGE
EAST SPAN SEISMIC SAFETY PROJECT

OAKLAND APPROACH STRUCTURES - PHASE I

EASTBOUND HINGE EE DETAILS NO. 3

Rev. Date: 5-18-98

ORIGINAL SCALE IN MILLIMETERS FOR REDUCED PLANS 0 10 20 30 40 50 60 70 80 90 100

CU 04
EA 0120L1

DISREGARD PRINTS BEARING EARLIER REVISION DATES

REVISION DATES (PRELIMINARY STAGE ONLY) 8/26/04 10/29/04 2/18/05 6/24/05 11/14/05 1/31/06 4/17/06 7/28/06 11/28/06 7/31/08

SHEET 127 OF 224

USERNAME => LAN DATE PLOTTED => 8/5/2008

DIST.	COUNTY	ROUTE	KILOMETER POST TOTAL PROJECT	SHEET NO.	TOTAL SHEETS
04	Ala	80	1.6/2.7	242R2	643

REGISTERED ENGINEER - CIVIL

1-29-07
PLANS APPROVAL DATE

REGISTERED PROFESSIONAL ENGINEER MOHAN S. CHAR No. C057894 Exp. 6/30/08 CIVIL STATE OF CALIFORNIA

The State of California or its officers or agents shall not be responsible for the accuracy or completeness of electronic copies of this plan sheet.

T.Y. LIN / MOFFATT & NICHOL
TWO HARRISON STREET, SUITE 500
SAN FRANCISCO, CA 94105

LIM & NASCIMENTO ENGINEERING CORPORATION
12 MAUCHLY, BLDG L
IRVINE, CA 92618

PRESTRESSING NOTES

1. Post-tensioning characteristics assumed for design:

   Longitudinal prestressing strand (Girder & partial Deck prestressing)

   Frame 1 - See "Eastbound Girder layout No. 1 & 2" sheets
   Frame 1 Partial Deck - See "Eastbound Deck Details No. 2 & 3" sheets

   Transverse Diaphragm prestressing strand

   Friction curvature coefficient : 0.25
   Friction wobble coefficient : 0.0007/m
   Anchor set : 10 mm

   Vertical Diaphragm Prestressing bars (Sheathed for Post-tension & grouting)

   Friction curvature coefficient : 0.20
   Friction wobble coefficient : 0.0007/m
   Anchor set : 2 mm

   Prestressing strands shall conform to ASTM A416, low relaxation, 7-wire strands.
   Guaranteed Ultimate Strength = 1860 MPa
   Prestressing bars shall conform to ASTM A722, Grade 1030.

2. At Frame 1, a minimum compressive strength of 43 MPa (f'ci) shall be attained in the concrete prior to stressing.

3. All transverse prestressing tendons shall be stressed to jacking forces as shown on "Eastbound Hinge EE Details No. 6" sheet. △2

4. All vertical high strength prestressing bars shall be stressed to jacking force equal to 1150 kN.

5. Ducts for longitudinal and transverse tendons shall consist of galvanized corrugated steel ducts. Prebent galvanized steel pipes shall be used for prestressing tendons with radius less than 10 m. Hairpin "U" bars shall be added as shown on "Detail 1" unless shown otherwise.

6. All prestressing steel (transverse and vertical) in Diaphragms C & D shall be stressed after concrete has reached a compressive strength of 43 MPa.
   The work shall proceeed in the following stages:
   Stage 1: Stress Tendons C1 & C4 to 100% Pjack.
   Stage 2: Stress Tendons C2, C3, D2 & D3 to 100% Pjack; sequence to minimize eccentricity.
   Stage 3: Cast concrete in anchorage blockouts (Minimum compressive strength shall be 43 MPa).
   Stage 4: Stress vertical H.S Bars to 100% Pjack.

7. After concrete in anchorage blockouts in Diaphragms C & D has reached required minimum strength, stress Frame 1 Pier Caps/Girders/Deck tendons.

8. Grout all ducts and H.S. Bars in Diaphragms C & D (Minimum strength of grout shall be 35 MPa).

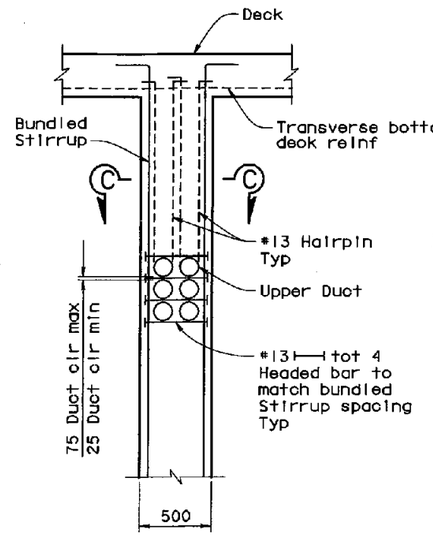

SECTION A-A
No Scale

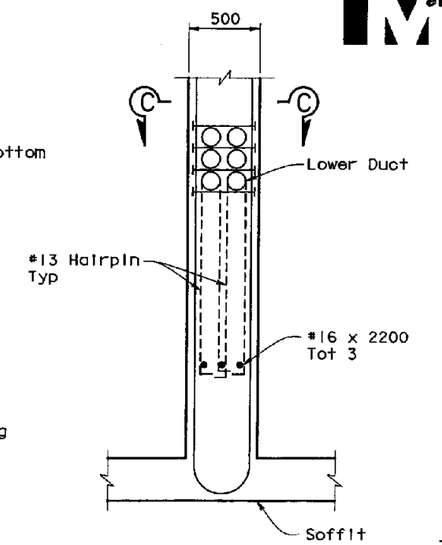

SECTION B-B
No Scale

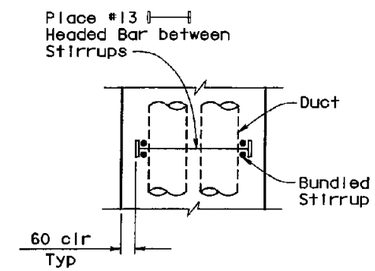

SECTION C-C
No Scale

△1

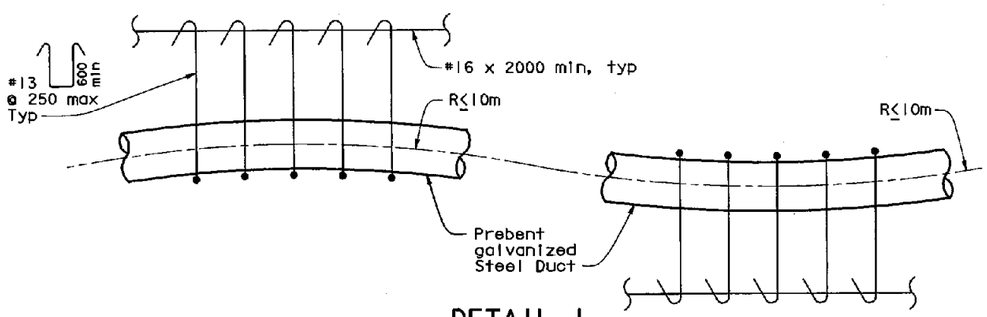

DETAIL 1
No Scale

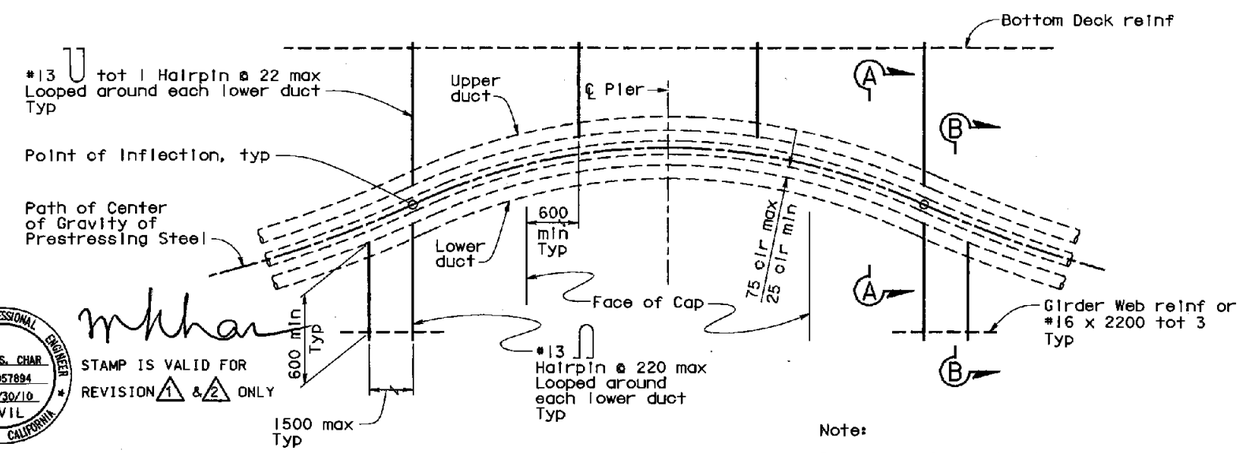

DETAIL 2
No Scale

Note:
Ducts are shown side by side for 3 rows layout. Other layout should be approved by Engineer.

REGISTERED PROFESSIONAL ENGINEER MOHAN S. CHAR No. C057894 Exp. 6/30/10 CIVIL STATE OF CALIFORNIA

STAMP IS VALID FOR REVISION △1 & △2 ONLY

MARK	DATE	DESCRIPTIONS	BY	CH'D
△1	7/31/08	REVISED NOTE 6. ADDED NOTES 7 & 8	MSC	TWD
△2	3/12/09	REVISED NOTE 3 & 4	MSC	TWD

REVISION(S)

CONTRACT CHANGE ORDER NO. 62
SHEET 18 OF 22 4/6/09

ALL DIMENSIONS ARE IN MILLIMETERS UNLESS OTHERWISE SHOWN

DESIGN OVERSIGHT
SAM AKKAD FRANCISCO CARPIO BERNARD CHAN HASAN EL-MATUR
SIGN OFF DATE 3/19/2009

	BY	CHECKED
DESIGN	M. CHAR	T. DUDLEY
DETAILS	N. MORCILLO/M. ANDRASEK	M. CHAR
QUANTITIES	N. MORCILLO/Y. KIM	V.SIVAKOLUNDU/T. DUDLEY

PREPARED FOR THE STATE OF CALIFORNIA DEPARTMENT OF TRANSPORTATION

MOHAN S. CHAR
PROJECT ENGINEER

BRIDGE NO. 34-0006L/R
KILOMETER POST 1.6

SAN FRANCISCO OAKLAND BAY BRIDGE
EAST SPAN SEISMIC SAFETY PROJECT

OAKLAND APPROACH STRUCTURES - PHASE 1

EASTBOUND HINGE EE DETAILS NO. 5

Rev. Date: 5-18-98

ORIGINAL SCALE IN MILLIMETERS FOR REDUCED PLANS 0 10 20 30 40 50 60 70 80 90 100

CU 04
EA 0120L1

DISREGARD PRINTS BEARING EARLIER REVISION DATES

REVISION DATES (PRELIMINARY STAGE ONLY) 10/30/03 8/20/04 10/28/04 2/18/05 6/24/05 11/14/05 1/24/06 4/17/06 7/28/06 7/31/08

SHEET 129 OF 224

FILE => u:\BRIDGE\TYL10502\2009 CCOs\Pier8_HingeEW5\04-0120L1-34-006-n-hinge-east5.dgn

USERNAME => LAN DATE PLOTTED => 3/12/2009 TIME PLOTTED => 11:51:18 AM

DIST.	COUNTY	ROUTE	KILOMETER POST TOTAL PROJECT	SHEET NO.	TOTAL SHEETS
04	Ala	80	1.6/2.7	243R1	643

Caltrans Metric

REGISTERED ENGINEER - CIVIL

1-29-07
PLANS APPROVAL DATE

REGISTERED PROFESSIONAL ENGINEER MOHAN S. CHAR No. C057894 Exp. 6/30/08 CIVIL STATE OF CALIFORNIA

The State of California or its officers or agents shall not be responsible for the accuracy or completeness of electronic copies of this plan sheet.

T.Y. LIN / MOFFATT & NICHOL
TWO HARRISON STREET, SUITE 500
SAN FRANCISCO, CA 94105

LIM & NASCIMENTO ENGINEERING CORPORATION
12 MAUCHLY, BLDG L
IRVINE, CA 92618

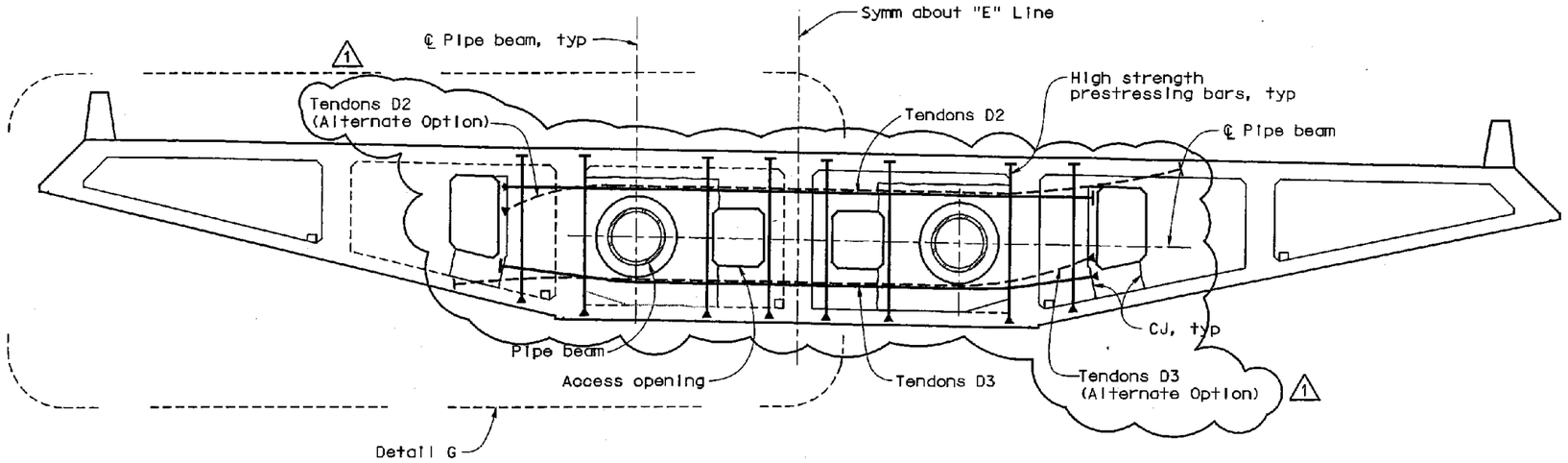

SECTION K-K

1:50

STAMP IS VALID FOR REVISION 1 ONLY

MARK	DATE	REVISION(S)	BY	CH'D
1	7/31/08	ALTERNATE STRESSING OPTIONS ADDED	MSC	TWD
		DESCRIPTIONS		

CONTRACT CHANGE ORDER NO. 62
SHEET 19 OF 22 4/6/09

Diaphragm	Tendon	No. of tendons* x No. of strands	Pjack = Jacking force per tendon (kN)
C	C1	2x16	3130
	C2	2x20	3910
	C3	2x18	3520
	C4	1x27	5280
D	D2	2x9	1760
	D3	2x9	1760

* per diaphragm

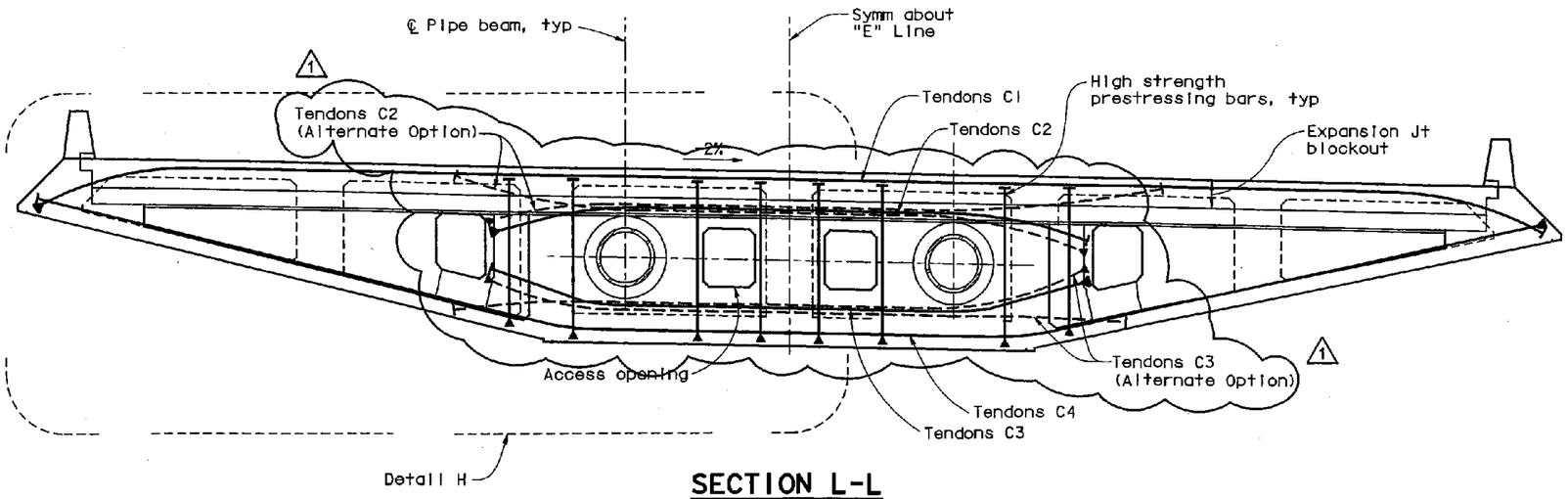

SECTION L-L

1:50

Notes:

1. For Details G and H, see "Eastbound Hinge EE Details No. 7" and "Eastbound Hinge EE Details No. 8" sheets.
2. Anchorage symbols are as follows:
   - ⊢ Jacking end
   - ▶⊢ Anchorage end
3. For prestressing notes, see "Hinge EE Details No. 5" sheet.
4. Limits of CIP diaphragm concrete are not shown for clarity.

ALL DIMENSIONS ARE IN MILLIMETERS UNLESS OTHERWISE SHOWN

DESIGN OVERSIGHT: SAM AKKAD, FRANCISCO CARPIO, BERNARD CHAN, HASAN EL-NATUR
SIGN OFF DATE 8/6/2008

	BY	CHECKED
DESIGN	M. CHAR	T. DUDLEY
DETAILS	N. MORCILLO/M. ANDRASEK	M. CHAR
QUANTITIES	N. MORCILLO/Y. KIM	V. SIVAKOLUNDU/T. DUDLEY

PREPARED FOR THE STATE OF CALIFORNIA DEPARTMENT OF TRANSPORTATION

MOHAN S. CHAR
PROJECT ENGINEER

CU 04
EA 0120L1

BRIDGE NO. 34-0006L/R
KILOMETER POST 1.6

SAN FRANCISCO OAKLAND BAY BRIDGE
EAST SPAN SEISMIC SAFETY PROJECT

OAKLAND APPROACH STRUCTURES - PHASE I

EASTBOUND HINGE EE DETAILS NO. 6

Rev. Date: 5-16-98

ORIGINAL SCALE IN MILLIMETERS FOR REDUCED PLANS 0 10 20 30 40 50 60 70 80 90 100

DISREGARD PRINTS BEARING EARLIER REVISION DATES 8/29/04 10/28/04 2/18/05 6/24/05 11/14/05 1/31/06 4/12/06 7/28/06 11/28/06 7/31/08

SHEET 130 OF 224

USERNAME -> LAN DATE PLOTTED -> 8/4/2008 TIME PLOTTED -> 4:10:23 PM

DIST.	COUNTY	ROUTE	KILOMETER POST TOTAL PROJECT	SHEET NO.	TOTAL SHEETS
04	Ala	80	1.6/2.7	244R1	643

REGISTERED ENGINEER - CIVIL

1-29-07
PLANS APPROVAL DATE

REGISTERED PROFESSIONAL ENGINEER MOHAN S. CHAR No. C057894 Exp. 6/30/08 CIVIL STATE OF CALIFORNIA

The State of California or its officers or agents shall not be responsible for the accuracy or completeness of electronic copies of this plan sheet.

T.Y. LIN / MOFFATT & NICHOL
TWO HARRISON STREET, SUITE 500
SAN FRANCISCO, CA 94105

LIM & NASCIMENTO ENGINEERING CORPORATION
12 MAUCHLY, BLDG L
IRVINE, CA 92618

REGISTERED PROFESSIONAL ENGINEER MOHAN S. CHAR No. C057894 Exp. 6/30/10 CIVIL STATE OF CALIFORNIA

STAMP IS VALID FOR REVISION 1 ONLY

MARK	DATE	REVISION(S)	BY	CH'D
1	7/31/08	ALTERNATE STRESSING OPTION NOTE ADDED	MSC	TWD
		DESCRIPTIONS		

CONTRACT CHANGE ORDER NO. 62
SHEET 20 OF 22 4/6/09

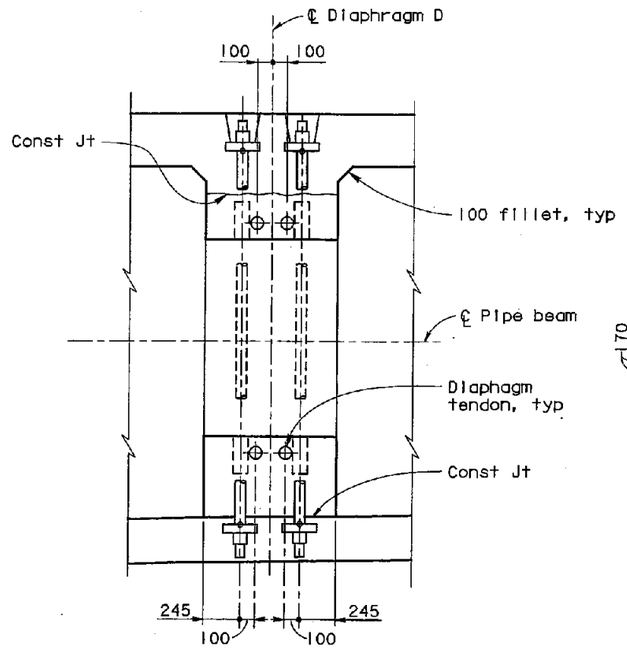

SECTION P-P
1:20

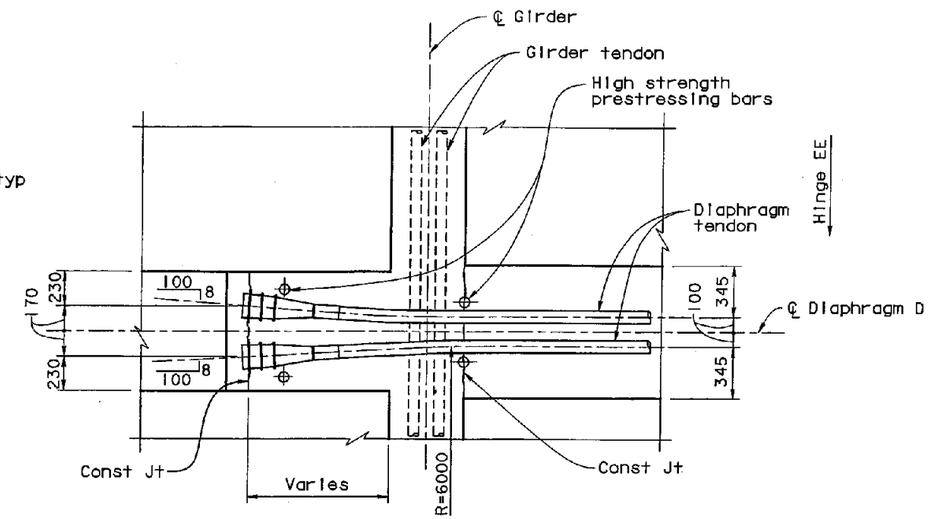

SECTION Q-Q
1:20

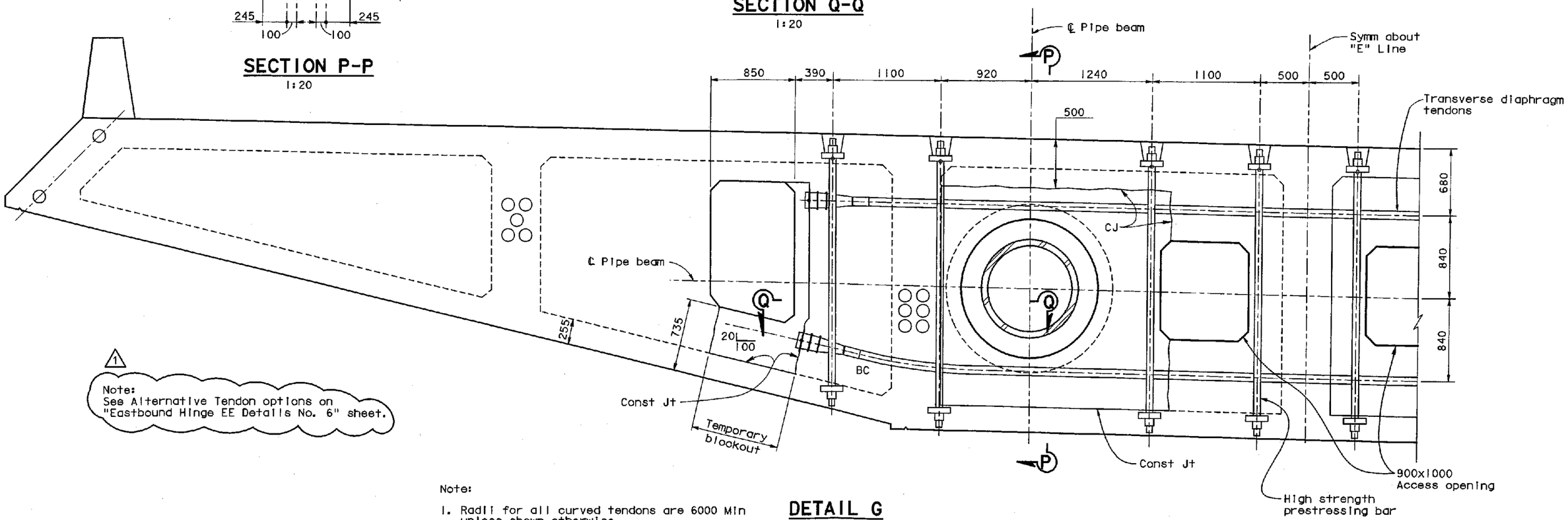

Note:

1. Radii for all curved tendons are 6000 Min unless shown otherwise.

DETAIL G
1:20

ALL DIMENSIONS ARE IN MILLIMETERS UNLESS OTHERWISE SHOWN

DESIGN OVERSIGHT: SAM AKKAD, FRANCISCO CARPIO, BERNARD CHAN, HASAN EL-NATUR
SIGN OFF DATE 8/6/2008

	BY	CHECKED
DESIGN	M. CHAR	T. DUDLEY
DETAILS	N. MORCILLO/M. ANDRASEK	M. CHAR
QUANTITIES	N. MORCILLO/Y. KIM	V. SIVAKOLUNDU/T. DUDLEY

PREPARED FOR THE STATE OF CALIFORNIA DEPARTMENT OF TRANSPORTATION

MOHAN S. CHAR
PROJECT ENGINEER

BRIDGE NO. 34-0006L/R
KILOMETER POST 1.6

SAN FRANCISCO OAKLAND BAY BRIDGE
EAST SPAN SEISMIC SAFETY PROJECT

OAKLAND APPROACH STRUCTURES - PHASE I

EASTBOUND HINGE EE DETAILS NO. 7

Rev. Date: 5-18-98

ORIGINAL SCALE IN MILLIMETERS FOR REDUCED PLANS 0 10 20 30 40 50 60 70 80 90 100

CU 04
EA 0120L1

DISREGARD PRINTS BEARING EARLIER REVISION DATES

REVISION DATES (PRELIMINARY STAGE ONLY) 9/30/03 8/20/04 10/28/04 2/18/05 6/24/05 1/14/06 1/31/06 4/17/06 7/28/06 7/31/08

SHEET 131 OF 224

USERNAME => LAN DATE PLOTTED => 8/4/2008 TIME PLOTTED => 4:22:35 PM

DIST.	COUNTY	ROUTE	KILOMETER POST TOTAL PROJECT	SHEET NO.	TOTAL SHEETS
04	Ala	80	1.6/2.7	245R1	643

REGISTERED ENGINEER - CIVIL

1-29-07
PLANS APPROVAL DATE

REGISTERED PROFESSIONAL ENGINEER MOHAN S. CHAR No. C057894 Exp. 6/30/08 CIVIL STATE OF CALIFORNIA

The State of California or its officers or agents shall not be responsible for the accuracy or completeness of electronic copies of this plan sheet.

T.Y. LIN / MOFFATT & NICHOL
TWO HARRISON STREET, SUITE 500
SAN FRANCISCO, CA 94105

LIM & NASCIMENTO ENGINEERING CORPORATION
12 MAUCHLY, BLDG L
IRVINE, CA 92618

MARK	DATE	REVISION(S)	BY	CH'D
1	7/31/08	ALTERNATE STRESSING OPTION NOTE ADDED	MSC	TWD

DESCRIPTIONS

CONTRACT CHANGE ORDER NO. 62
SHEET 21 OF 22 4/6/09

REGISTERED PROFESSIONAL ENGINEER MOHAN S. CHAR No. C057894 Exp. 6/30/10 CIVIL STATE OF CALIFORNIA

STAMP IS VALID FOR REVISION 1 ONLY

Notes:

1. For Sections "S-S" and "U-U", see "Eastbound Hinge EE Details No. 9" sheet.
2. Radii for all curved tendons are 6000 Min unless shown otherwise.
3. Limits for CIP diaphragm concrete are not shown for clarity.
4. Girder end prestress anchorage arrangement shown here is based on using 6 tendons/girder. Arrangement using 4 or 5 tendons is similar.

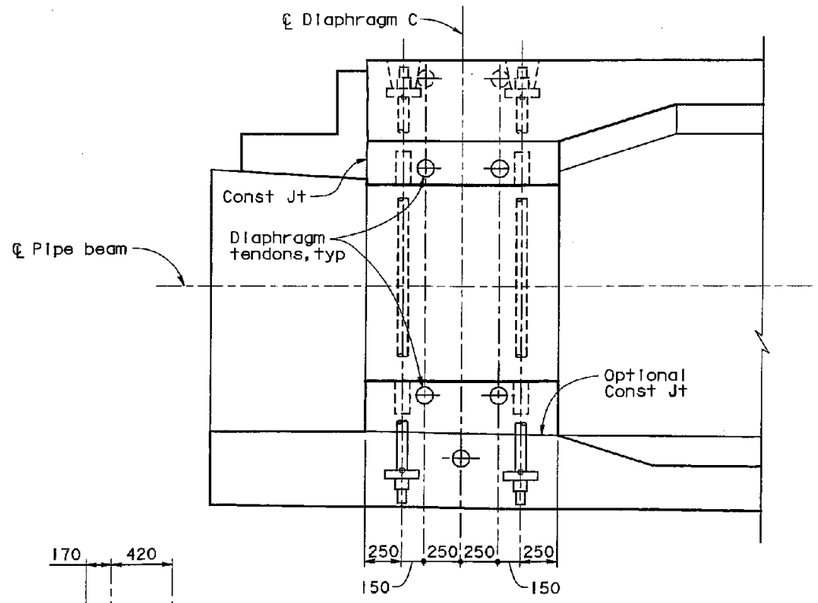

SECTION R-R
1:20

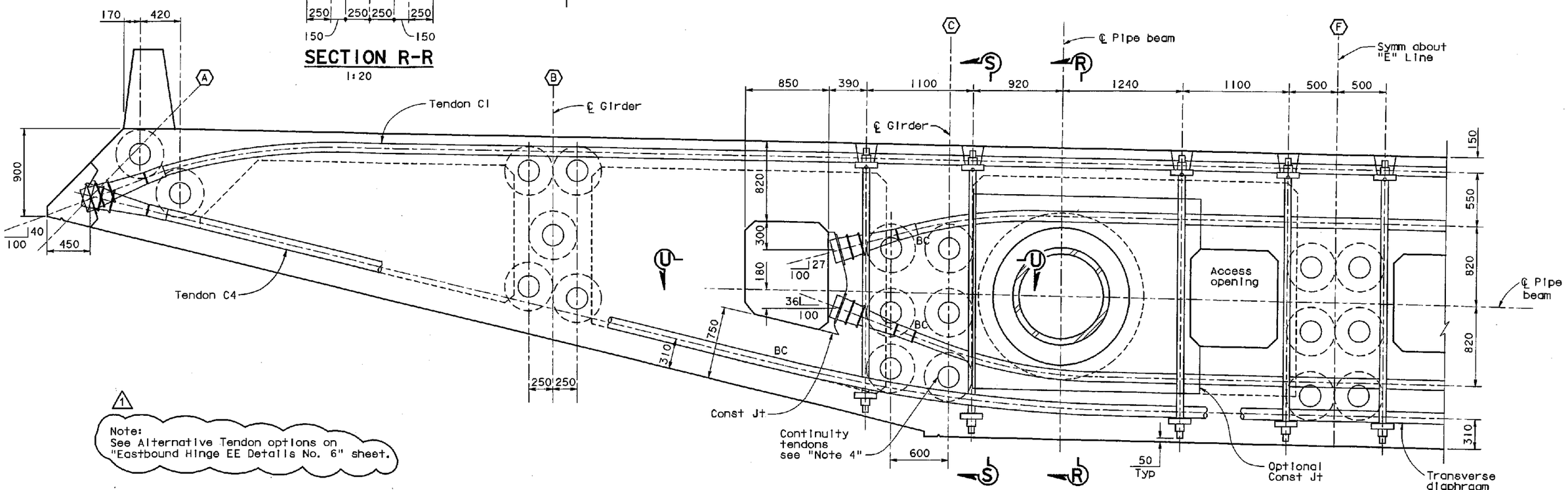

1
Note:
See Alternative Tendon options on "Eastbound Hinge EE Details No. 6" sheet.

DETAIL H
1:20

ALL DIMENSIONS ARE IN MILLIMETERS UNLESS OTHERWISE SHOWN

DESIGN OVERSIGHT
SAM AKKAD FRANCISCO CARPIO BERNARD CHAN HASAN EL-NATUR
SIGN OFF DATE 8/6/2008

	BY	CHECKED
DESIGN	M. CHAR	T. DUDLEY
DETAILS	N. MORCILLO/M. ANDRASEK	M. CHAR
QUANTITIES	N. MORCILLO/Y. KIM	V. SIVAKOLUNDU/T. DUDLEY

PREPARED FOR THE STATE OF CALIFORNIA DEPARTMENT OF TRANSPORTATION

MOHAN S. CHAR
PROJECT ENGINEER

BRIDGE NO. 34-0006L/R
KILOMETER POST 1.6

SAN FRANCISCO OAKLAND BAY BRIDGE
EAST SPAN SEISMIC SAFETY PROJECT

OAKLAND APPROACH STRUCTURES - PHASE I

EASTBOUND HINGE EE DETAILS NO. 8

Rev. Date: 5-18-98

ORIGINAL SCALE IN MILLIMETERS FOR REDUCED PLANS 0 10 20 30 40 50 60 70 80 90 100

CU 04
EA 0120L1

DISREGARD PRINTS BEARING EARLIER REVISION DATES

REVISION DATES (PRELIMINARY STAGE ONLY) 8/28/04 10/28/04 2/18/05 6/24/05 11/4/05 1/31/06 4/17/06 7/28/06 11/28/06 7/31/08

SHEET 132 OF 224

TIME PLOTTED => 4:28:12 PM
DATE PLOTTED => 8/4/2008
USERNAME => LAN

MARK	DATE	DESCRIPTIONS	BY	CH'D
1	7/17/08	NOTES 2a, 2b AND 3 CLARIFIED	ALE	JNB
		NOTE C RENUMBERED		

REVISIONS

STAMP IS VALID FOR REV 1 ONLY

DIST.	COUNTY	ROUTE	KILOMETER POST TOTAL PROJECT	SHEET NO.	TOTAL SHEETS
04	Ala	80	1.6/2.7	260R1	643

REGISTERED ENGINEER - CIVIL

1-29-07

PLANS APPROVAL DATE

The State of California or its officers or agents shall not be responsible for the accuracy or completeness of electronic copies of this plan sheet.

T.Y. LIN / MOFFATT & NICHOL
TWO HARRISON STREET, SUITE 500
SAN FRANCISCO, CA 94105

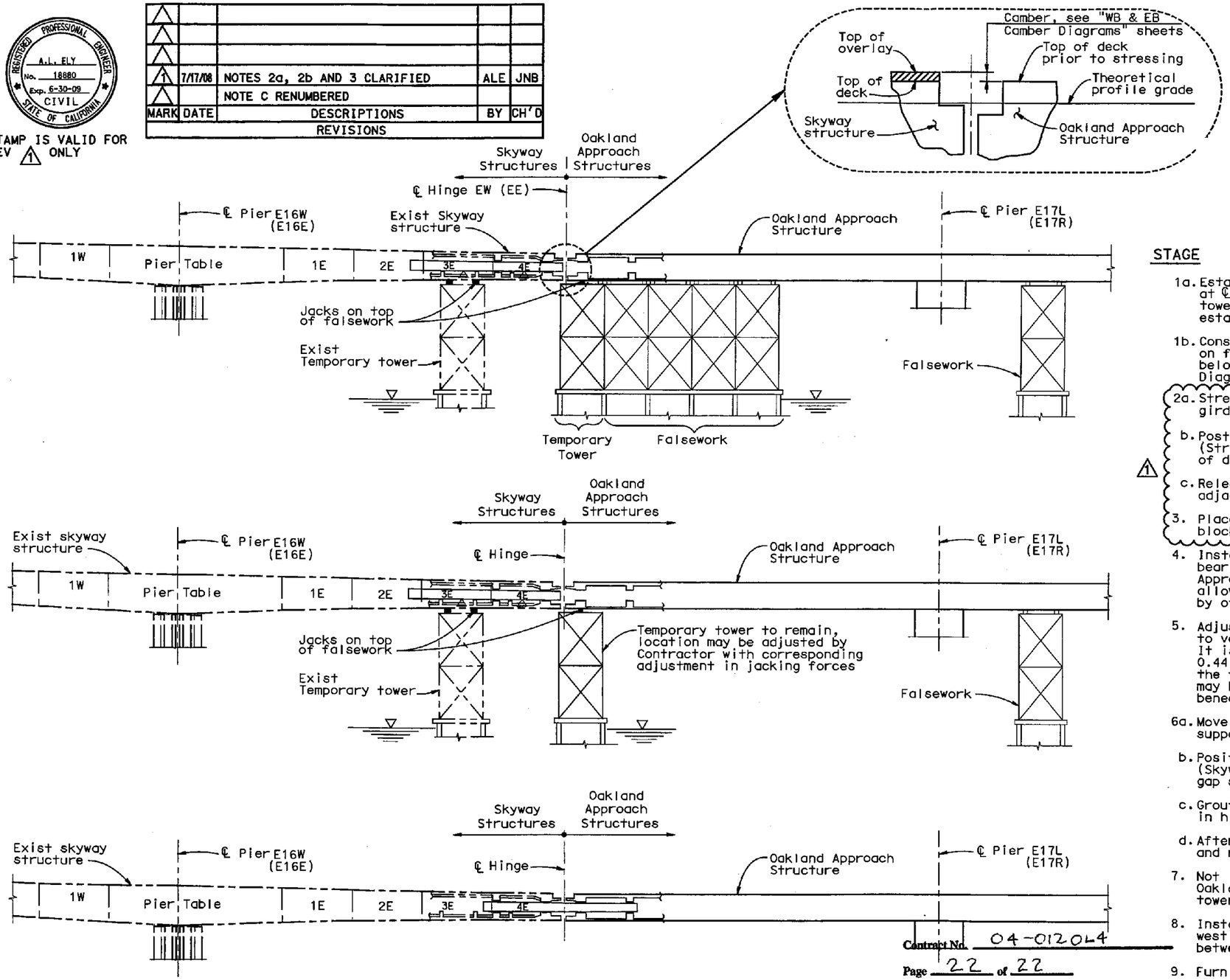

CONSTRUCTION SEQUENCE FOR HINGE EW & EE

1:250

STAGE	DESCRIPTION
1a.	Establish elevation of top of deck overlay for Skyway Structure at ℄ Hinge E. Any vertical support provided by temporary tower beneath Skyway Structure shall be released while establishing this elevation.
1b.	Construct and camber Oakland Approach Structure on falsework. Top of deck at time of casting to be cambered below Skyway Structure top of deck overlay see "WB & EB Camber Diagrams" sheets.
2a.	Stress Diaphragms C & D prior to post-tensioning Frame 1 pier caps/girders/deck. See "EW & EE Details No.5" sheets.
b.	Post-tension Frame 1 pier caps/girders/deck. (Stressing not to occur until 35 days after placement of deck slab concrete).
c.	Release falsework except for section (Temporary tower) adjacent to Hinge E.
3.	Place Hinge E closure pour concrete comprising of Frame 1 anchorage blockouts and construct barrier and bikepath railing east of Pier E17.
4.	Install and temporarily support circular segmented bearings in hinge diaphragm recesses at Oakland Approach Structure. Bearings shall be positioned to allow for installation of pipe beams. Bearings furnished by others.
5.	Adjust tower jacks to align Oakland Approach Structure to vertically match Skyway Structure at Hinge E. It is intended that the tower reaction be approximately 0.44 MN (±1.76 MN) when the structures are aligned and the tower is located as shown on this sheet. Note counterweight may be necessary. Any vertical support provided by temporary tower beneath Skyway Structure shall be released during this stage.
6a.	Move pipe beams into final position on temporary supports. Pipe beams furnished by others.
b.	Position circular segmented bearings around pipe beams (Skyway and Oakland Approach Structures) using gap spacers. Spacers furnished by others.
c.	Grout circular segmented bearings into final position in hinge diaphragms (Skyway and Oakland Approach Structures).
d.	After grout has attained design strength, extract gap spacers and remove pipe beam temporary supports.
7.	Not less than 90 days after stressing, release temporary tower at Oakland Approach and remove remaining falsework including temporary towers beneath Skyway Structure.
8.	Install overlay on skyway structure to a point 16 m west of Hinge E, and construct concrete barriers between Piers E16 and E17.
9.	Furnish and install seismic joint.

Contract No. 04-0120L4

Page 22 of 22

CCO No. 62 Suppl. No.

Contractor MCM

Res. Engr. B. Ghafghazi 4/6/09

DESIGN OVERSIGHT
SAM AKKAD FRANCISCO CARPIO BERNARD CHAN HASAN EL-NATUR
8-10-06
SIGN OFF DATE
7/23/08

Rev. Date: 5-18-98

DESIGN	BY Birdy	CHECKED Desai	
DETAILS	BY van Ryn/Zucchi/Mai	CHECKED Jain	
QUANTITIES	BY Liao	CHECKED E.Nichol	

PREPARED FOR THE STATE OF CALIFORNIA DEPARTMENT OF TRANSPORTATION

Jal Birdy
PROJECT ENGINEER

BRIDGE NO. 34-0006 L/R
KILOMETER POST 1.6

SAN FRANCISCO OAKLAND BAY BRIDGE
EAST SPAN SEISMIC SAFETY PROJECT

OAKLAND APPROACH STRUCTURES-PHASE 1

CONSTRUCTION SEQUENCE AT HINGE E

ORIGINAL SCALE IN MILLIMETERS FOR REDUCED PLANS 0 10 20 30 40 50 60 70 80 90 100

CU 04
EA 0120L1

DISREGARD PRINTS BEARING EARLIER REVISION DATES

REVISION DATES (PRELIMINARY STAGE ONLY) 2/12/03 4/18/03 10/20/03 10/29/04 2/24/05 6/24/06 11/14/06 1/24/06 4/27/06 7/23/08

SHEET 147 OF 224

FILE => J:\civil\4141\100%\oak\CCO 071708\04-012011-34-006-n-hingeseq.dgn

USERNAME => fsamson DATE PLOTTED => 7/17/2008 TIME PLOTTED => 2:52:23 PM

STATE OF CALIFORNIA - DEPARTMENT OF TRANSPORTATION

CONTRACT CHANGE ORDER MEMORANDUM

DATE: 4/6/2009 Page 1 of 1

TO: AMER BATA / BEN GHAFGHAZI	FILE: E.A. 04 - 0120L4
FROM: BEN GHAFGHAZI	CO-RTE-PM ALA-80-1.6/2.7
	FED. NO. NO FED AID
CCO#: 62 SUPPLEMENT#: 0 Category Code: CHPT	CONTINGENCY BALANCE (incl. this change) $8,272,720.00
COST: $0.00 INCREASE ☐ DECREASE ☐	HEADQUARTERS APPROVAL REQUIRED? ☑ YES ☐ NO
SUPPLEMENTAL FUNDS PROVIDED: $0.00	IS THIS REQUEST IN ACCORDANCE WITH ENVIRONMENTAL DOCUMENTS? ☑ YES ☐ NO
CCO DESCRIPTION: Revise Prestressing Sequence at Hinge E.	**PROJECT DESCRIPTION:** Construct bridge, roadway, building and electrical system.

Original Contract Time:	Time Adj. This Change:	Previously Approved CCO Time Adjustments:	Percentage Time Adjusted: (including this change)	Total # of Unreconciled Deferred Time CCO(s): (including this change)
810 Day(s)	DEF Day(s)	184 Day(s)	23 %	12

THIS CHANGE ORDER PROVIDES FOR:

Revising the prestressing sequence at Hinges EW and EE for Bridge 34-0006 L/R in accordance with modified procedures per sheets 2 of 22 through 22 of 22 of the CCO.

This change is necessary to revise the prestressing sequence shown on the contract plans to prevent undesired stresses in the structure. The changes will prevent detrimental cracking and preserve the structural integrity of the superstructure. The prestressing sequence on the contract plans is not the sequence the Designers intended.

This change has been discussed and concurred with Hasan El-Natur, Structures Design, Jal Birdy, structure designer for Moffat and Nichol, Jon Tapping, Headquarters Construction, and Ken Terpstra, Project Manager. Issue and approve was granted by Headquarters on August 19, 2008.

Maintenance concurrence is not necessary since this CCO does not make any changes to the bridge.

There shall be no cost associated with this CCO. A detailed cost analysis is on file.

Adjustment of contract time is deferred pending completion of the work specified in this change as it may affect the controlling operation. Determination of a commensurate time extension will be made in accordance with Section 10-1.14, "Progress Schedule (Critical Path Method)," of the Special Provisions and Section 8-1.07, "Liquidated Damages," of the Standard Specifications.

CONCURRED BY:			
Construction Engineer:	Ben Ghafghazi	Date	4/9/09
Bridge Engineer:	Mehran Ardakanian	Date	4/8/09
Project Engineer:		Date	
Project Manager:	Ken Terprstra	Date	8/13/08
FHWA Rep.:		Date	
Environmental:		Date	
Other (specify):	Hasan El-Natur, Structures Design	Date	7/3/08
Other (specify):	Jal Birdy, Moffat Nichol	Date	7/3/08
District Prior Approval By:		Date	
HQ (Issue Approve) By:	Ken Darby	Date	8/19/08
Resident Engineer's Signature:		Date	4/9/09

ESTIMATE OF COST	THIS REQUEST	TOTAL TO DATE
ITEMS	$0.00	$0.00
FORCE ACCOUNT	$0.00	$0.00
AGREED PRICE	$0.00	$0.00
ADJUSTMENT	$0.00	$0.00
TOTAL	$0.00	$0.00

FEDERAL PARTICIPATION

☐ PARTICIPATING ☐ PARTICIPATING IN PART ☑ NONE
☐ NON-PARTICIPATING (MAINTENANCE) ☐ NON-PARTICIPATING

FEDERAL SEGREGATION (if more than one Funding Source or P.I.P. type)
☑ CCO FUNDED PER CONTRACT ☐ CCO FUNDED AS FOLLOWS

FEDERAL FUNDING SOURCE	PERCENT

ADA Notice: For individuals with sensory disabilities, this document is available in alternate formats. For information call: (916) 654-6410 or TDD (916) 654-3880 or write Records and Forms Management, 1120 N Street, MS-89, Sacramento, CA 95814.

STATE OF CALIFORNIA - DEPARTMENT OF TRANSPORTATION

CONTRACT CHANGE ORDER MEMORANDUM

DATE: 4/6/2010 Page 1 of 1

TO: AMER BATA / BEN GHAFGHAZI

FROM: BEN GHAFGHAZI

FILE: **E.A.** 04 - 0120L4
CO-RTE-PM ALA-80-1.6/2.7
FED. NO. NO FED AID

CCO#: **62** SUPPLEMENT#: **1** Category Code: **AFZZ**

CONTINGENCY BALANCE (incl. this change) **$2,146,116.40**

COST: **$0.00** INCREASE ☐ DECREASE ☐

HEADQUARTERS APPROVAL REQUIRED? ☐ YES ☑ NO

SUPPLEMENTAL FUNDS PROVIDED: **$0.00**

IS THIS REQUEST IN ACCORDANCE WITH ENVIRONMENTAL DOCUMENTS? ☑ YES ☐ NO

CCO DESCRIPTION:
Time Adjustment of 0 Days

PROJECT DESCRIPTION:
Construct bridge, roadway, building and electrical system.

Original Contract Time:	Time Adj. This Change:	Previously Approved CCO Time Adjustments:	Percentage Time Adjusted: (including this change)	Total # of Unreconciled Deferred Time CCO(s): (including this change)
810 Day(s)	0 Day(s)	184 Day(s)	23 %	14

THIS CHANGE ORDER PROVIDES FOR:
A time adjustment of 0 (zero) working days, in accordance with Section 8-1.07, "Liquidated Damages", of the Standard Specifications.

It has been determined that the work of Contract Change Order No. 62 has had no impact on the contractor's controlling operation. Therefore, a time extension of 0 days is recommended.

Total Time Adjustment = 0 Days

CONCURRED BY:

Construction Engineer:	Ben Ghafghazi	Date 4/7/2010
Bridge Engineer:		Date
Project Engineer:		Date
Project Manager:		Date
FHWA Rep.:		Date
Environmental:		Date
Other (specify):		Date
Other (specify):		Date
District Prior Approval By:		Date
HQ (Issue Approve) By:		Date
Resident Engineer's Signature:		Date 4/7/2010

ESTIMATE OF COST

	THIS REQUEST	TOTAL TO DATE
ITEMS	$0.00	$0.00
FORCE ACCOUNT	$0.00	$0.00
AGREED PRICE	$0.00	$0.00
ADJUSTMENT	$0.00	$0.00
TOTAL	$0.00	$0.00

FEDERAL PARTICIPATION

☐ PARTICIPATING ☐ PARTICIPATING IN PART ☑ NONE
☐ NON-PARTICIPATING (MAINTENANCE) ☐ NON-PARTICIPATING

FEDERAL SEGREGATION (if more than one Funding Source or P.I.P. type)
☑ CCO FUNDED PER CONTRACT ☐ CCO FUNDED AS FOLLOWS

FEDERAL FUNDING SOURCE	PERCENT

ADA Notice: For individuals with sensory disabilities, this document is available in alternate formats. For information call: (916) 654-6410 or TDD (916) 654-3880 or write Records and Forms Management, 1120 N Street, MS-89, Sacramento, CA 95814.

STATE OF CALIFORNIA - DEPARTMENT OF TRANSPORTATION

CONTRACT CHANGE ORDER

Change Requested by: Engineer

CCO: 62	Suppl. No. 1	Contract No. 04 - 0120L4	Road ALA-80-1.6/2.7	FED. AID LOC.: NO FED AID

To: **M C M CONSTRUCTION INC**

You are directed to make the following changes from the plans and specifications or do the following described work not included in the plans and specifications for this contract. ***NOTE: This change order is not effective until approved by the Engineer.***

Description of work to be done, estimate of quantities and prices to be paid. (Segregate between additional work at contract price, agreed price and force account.) Unless otherwise stated, rates for rental of equipment cover only such time as equipment is actually used and no allowance will be made for idle time. This last percentage shown is the net accumulated increase or decrease from the original quantity in the Engineer's Estimate.

TIME ADJUSTMENT:

A determination of the delay in completion of the contract due to the work specified by Contract Change Order No. 62 has been made in accordance with the provisions of Section 8-1.07 of the Standard Specifications.

Time Adjustment = 0 Days

Acceptance of this change order constitutes an agreement of full resolution of all time impact costs resulting from Change Order No. 62.

This change order acts to resolve the deferred time issued on Change Order No. 62, and no additional time shall be granted.

Estimated Cost: **Increase** ☐ **Decrease** ☐ **$0.00**

By reason of this order the time of completion will be adjusted as follows: 0 days

Signature	**Resident Engineer** Ben Ghafghazi	**Date** 4/7/2010
Signature	**Construction Manager** Amer Bata	**Date** 4/8/2010
Signature	**Construction Manager** Amer Bata	**Date** 7/14/10

We the undersigned contractor, have given careful consideration to the change proposed and agree, if this proposal is approved, that we will provide all equipment, furnish the materials, except as may otherwise be noted above, and perform all services necessary for the work above specified, and will accept as full payment therefor the prices shown above.

NOTE: If you, the contractor, do not sign acceptance of this order, your attention is directed to the requirements of the specifications as to proceeding with the ordered work and filing a written protest within the time therein specified.

Signature	**(Print name and title)** JAMES A. CARTER, PRES.	**Date** 7/14/10

CONTRACT CHANGE ORDER

Change Requested by: Engineer

CCO 63	Suppl. No. 0	Contract No. 04 - 0120L4	Road ALA-80-1.6/2.7	FED. AID LOC.: NO FED AID

To: **M C M CONSTRUCTION INC**

You are directed to make the following changes from the plans and specifications or do the following described work not included in the plans and specifications for this contract. ***NOTE: This change order is not effective until approved by the Engineer.***

Description of work to be done, estimate of quantities and prices to be paid. (Segregate between additional work at contract price, agreed price and force account.) Unless otherwise stated, rates for rental of equipment cover only such time as equipment is actually used and no allowance will be made for idle time. This last percentage shown is the net accumulated increase or decrease from the original quantity in the Engineer's Estimate.

Revise the location of utility openings in the westbound Oakland Touchdown superstructure from Hinge EW to Hinge FW (Frame 1) and Hinge FW to Abutment 23 (Frame 2) as shown on sheets 2 of 9 through 9 of 9 of this CCO.

The CCO sheets shall replace sheets 201, 202, 207, 222, 223, 224, 261, and 263 of 643 of the contract plans.

There is no cost or credit as a result of this change.

Estimated Cost: Increase ☐ **Decrease** ☐ **$0.00**

By reason of this order the time of completion will be adjusted as follows: 0 days

Submitted by

Signature	Resident Engineer BEN GHAFGHAZII	Date 12/10/08

Approval Recommended by

Signature	Construction Engineer Ben Ghafghazi	Date 12/10/08

Engineer Approval by

Signature	Construction Manager Amer Bata	Date 2/4/10

We the undersigned contractor, have given careful consideration to the change proposed and agree, if this proposal is approved, that we will provide all equipment, furnish the materials, except as may otherwise be noted above, and perform all services necessary for the work above specified, and will accept as full payment therefor the prices shown above.

NOTE: If you, the contractor, do not sign acceptance of this order, your attention is directed to the requirements of the specifications as to proceeding with the ordered work and filing a written protest within the time therein specified.

Contractor Acceptance by

Signature	(Print name and title) Edmund A Ruchi - Treasurer	Date 1-14-2010

To get to the Caltrans web site, go to: http://www.dot.ca.gov

DIST	COUNTY	ROUTE	KILOMETER POST TOTAL PROJECT	SHEET NO.	TOTAL SHEETS
04	Ala	80	1.6/2.7	201R1	643

Caltrans Metric

Adam Wang
REGISTERED ENGINEER - CIVIL
1-29-07
PLANS APPROVAL DATE

REGISTERED PROFESSIONAL ENGINEER ADAM TM WANG No. 40402 Exp. 3-31-2007 CIVIL STATE OF CALIFORNIA

The State of California or its officers or agents shall not be responsible for the accuracy or completeness of electronic copies of this plan sheet.

T.Y. LIN / MOFFATT & NICHOL
TWO HARRISON STREET, SUITE 500
SAN FRANCISCO, CA 94105

W. KOO & ASSOCIATES, INC
625 THE CITY DRIVE SOUTH, SUITE 200
ORANGE, CA 92868

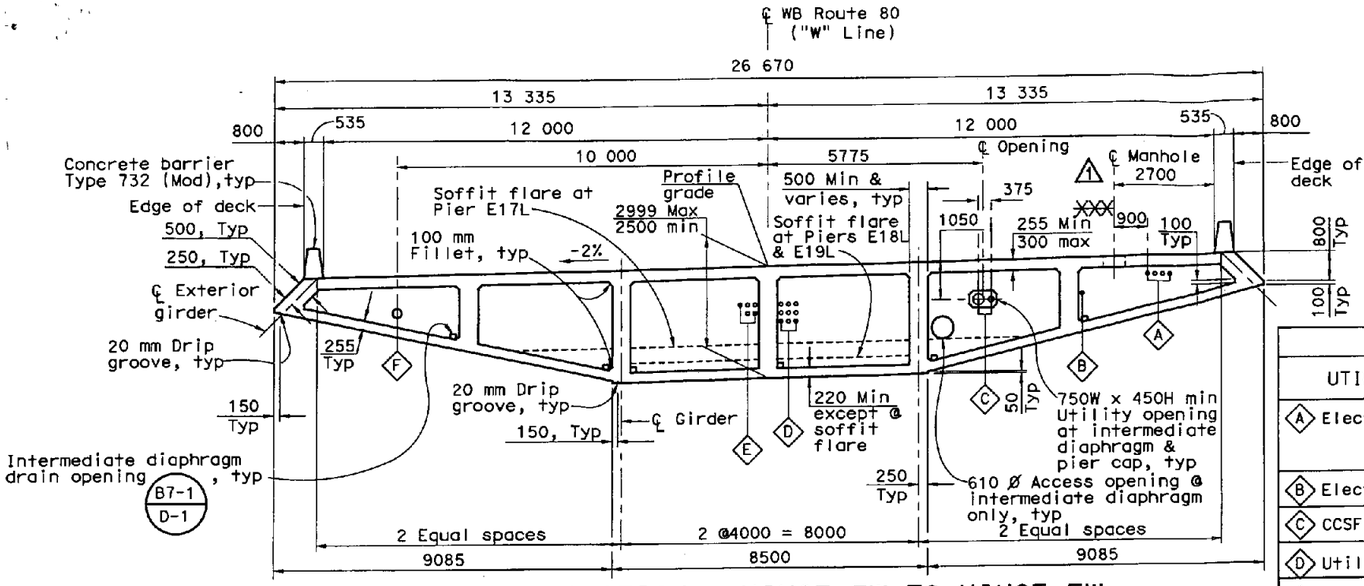

TYPICAL SECTION - HINGE EW TO HINGE FW

1:80

Note:
Conduit pattern shown near pier E18L & E19L, other locations, see "WB Pier Det No. 4 & 6" & "Hinge EW Det No. 2 & 3" & "Hinge FW Det No. 1" sheets

✱✱✱ See "Westbound Girder Layout No. 1" for transition of deck slab thickness

Notes:

1. #29x19 000 (Pier E17L) & #25x19 000 (Piers E18L & E19L) tot 12 bars per first interior girder.
2. #29x19 000 (Pier E17L) & #25x19 000 (Piers E18L & E19L) tot 22 bars per interior girder.
3. Bar shall be continuous over ℄ piers and shall be service butt spliced. △1
5. Anchorages and footholds at service platforms not shown, see "SERVICE PLATFORMS - PLAN AND SECTIONS" sheet.

UTILITY OPENING SCHEDULE

UTILITY DESCRIPTION	CONDUIT SIZE (mm)	PIER /DIAPHRAGM OPENING SIZE (mm)	HINGE OPENING SIZE (mm)
(A) Electrical conduits‡	4-103Ø (Hinge EW to Hinge FW & Pier E22L) 3-103Ø & 3- 63Ø/41Ø (Hinge FW to Pier E21L)	Cast-in-place	Cast-in-place
(B) Electrical conduits #	1-103Ø	Cast-in-place	Cast-in-place
(C) CCSF	NPS-6 (Reclaimed water) & NPS-12 (water)	Pier & Diaph 750Wx450H except Diaph C & D & Intermediate Diaph	750W x 450H
(D) Utility Conduits #	10-103Ø (Hinge EW to Pier E17L) 9-103Ø (Pier E18L to Pier E21L)	Cast-in-place	Cast-in-place
(E) Utility conduits #	5-103Ø	Cast-in-place	Cast-in-place
(F) Drain line	NPS 8 & NPS 10‡	250Ø & 300Ø‡	None
(H) Conduits	4-41Ø	None	Cast-in-Place

‡ - See "Westbound Girder Layout No. 1 & 3" sheets for size and locations.
# - For conduit layout and details not shown, see "Roadway Plans"

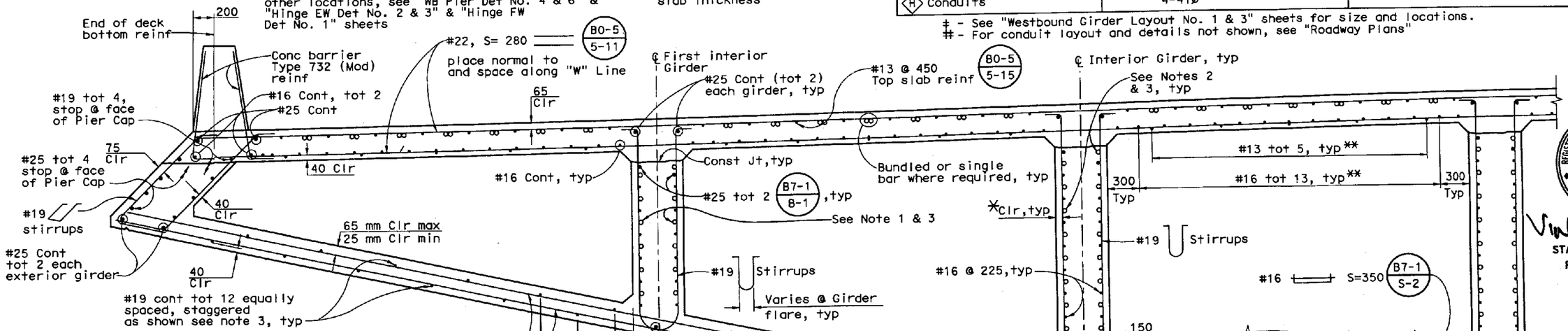

REGISTERED PROFESSIONAL ENGINEER VINH DIEU TRINH No. 50685 Exp. 9-30-2009 CIVIL STATE OF CALIFORNIA

STAMP IS VALID FOR REVISION △1 ONLY

LEGEND

- • Denotes regular reinforcement
- ∘ Denotes additional longitudinal reinforcement, see "Westbound Deck Details No. 1" sheet. For additional girder stem reinf, see "Westbound Girder Details" sheet, see note 3.
- ✱ - 60 mm Min and 100 mm Max Clr to stirrup (except 25 mm Min clear near anchorage)
- ✱✱ - Distribution bars
- x - Denotes bar spacing

MARK	DATE	DESCRIPTIONS	BY	CH'D	CCO#
△1	7/21/08	REVISE UTILITY OPENING LOCATION	VT	JSK	
		NOTE 4 DELETED			

REVISIONS

PART TYPICAL SECTION - HINGE EW TO HINGE FW

1:20

B0-5 B7-1 B8-5

ALL DIMENSIONS ARE IN MILLIMETERS UNLESS OTHERWISE SHOWN

CONTRACT CHANGE ORDER NO. 63
SHEET 2 OF 9 04-0120L4 12/10/08

DESIGN OVERSIGHT
SAM AKKAD FRANCISCO CARPIO BERNARD CHAN HASAN EL-NATUR
SIGN OFF DATE 7/23/08
Rev. Date: 5-18-98

DESIGN	BY K. Russell	CHECKED A. Moubayed	
DETAILS	BY G. Buelow	CHECKED A. Moubayed	
QUANTITIES	BY C. Lin	CHECKED D. Saretsky	

PREPARED FOR THE STATE OF CALIFORNIA DEPARTMENT OF TRANSPORTATION

Adam Wang
PROJECT ENGINEER

CU 04
EA 0120L1

BRIDGE NO. 34-0006L/R
KILOMETER POST 1.6

DISREGARD PRINTS BEARING EARLIER REVISION DATES

REVISION DATES (PRELIMINARY STAGE ONLY): 10/24/03 1/28/04 10/29/04 2/18/05 5/24/05 11/14/05 1/31/06 4/13/06 7/28/06 7/21/08

SHEET 88 OF 224

ORIGINAL SCALE IN MILLIMETERS FOR REDUCED PLANS 0 10 20 30 40 50 60 70 80 90 100

FILE => t:\cad\320-19\21\CCO\AnchorageCCO\CC063-NO CLOUD\04-0120L1-34-006-k-typsec1.dgn

USERNAME => \187\81 DATE PLOTTED => 8/14/08 TIME PLOTTED => 8:11AM

SAN FRANCISCO OAKLAND BAY BRIDGE
EAST SPAN SEISMIC SAFETY PROJECT

OAKLAND APPROACH STRUCTURES-PHASE 1

WESTBOUND TYPICAL SECTION NO. 1

DIST	COUNTY	ROUTE	KILOMETER POST TOTAL PROJECT	SHEET NO.	TOTAL SHEETS
04	Ala	80	1.6/2.7	202R1	643

Caltrans Metric

Adam Wang
REGISTERED ENGINEER - CIVIL
1-29-07
PLANS APPROVAL DATE

REGISTERED PROFESSIONAL ENGINEER ADAM TN WANG No. 40402 Exp. 3-31-2007 CIVIL STATE OF CALIFORNIA

The State of California or its officers or agents shall not be responsible for the accuracy or completeness of electronic copies of this plan sheet.

T.Y. LIN / MOFFATT & NICHOL
TWO HARRISON STREET, SUITE 500
SAN FRANCISCO, CA 94105

W. KOO & ASSOCIATES, INC
625 THE CITY DRIVE SOUTH, SUITE 200
ORANGE, CA 92868

To get to the Caltrans web site, go to: http://www.dot.ca.gov

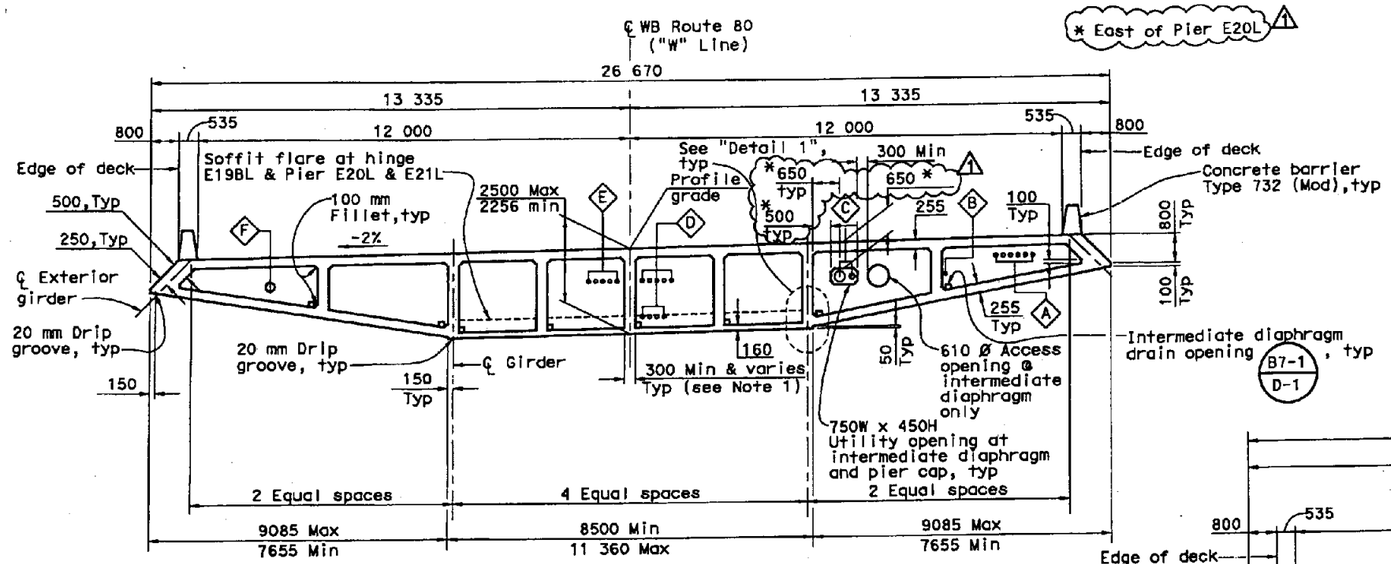

TYPICAL SECTION - HINGE FW TO PIER E21L

1:80

Notes:

1. 380 mm Girder stem width Hinge FW and Pier E20L. See "Westbound Girder Layout No. 3" sheet.
2. For reinf details, see "Westbound Typical Section No. 3" sheet.
3. For conduit layout and details not shown, see "Roadway Plans".

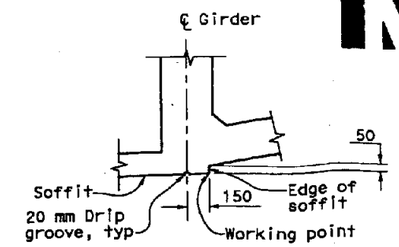

DETAIL 1

No Scale

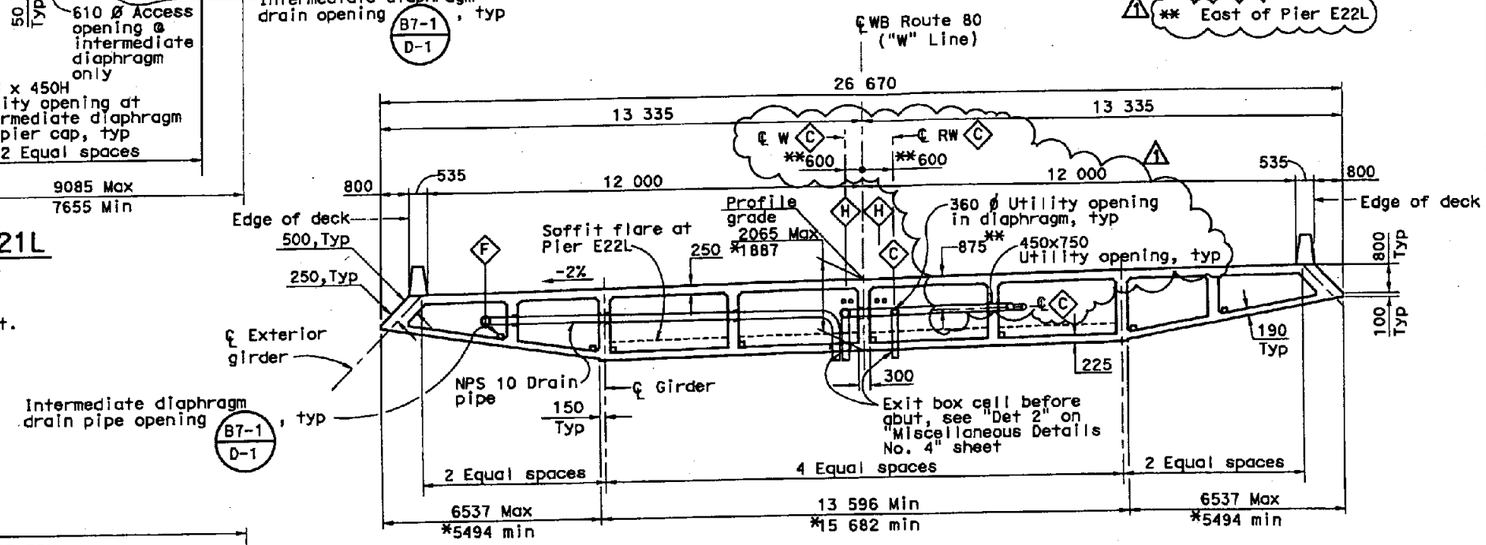

TYPICAL SECTION - PIER E22L TO ABUT E23L

1:80

* Dimensions measured at End of Bridge (Westbound)

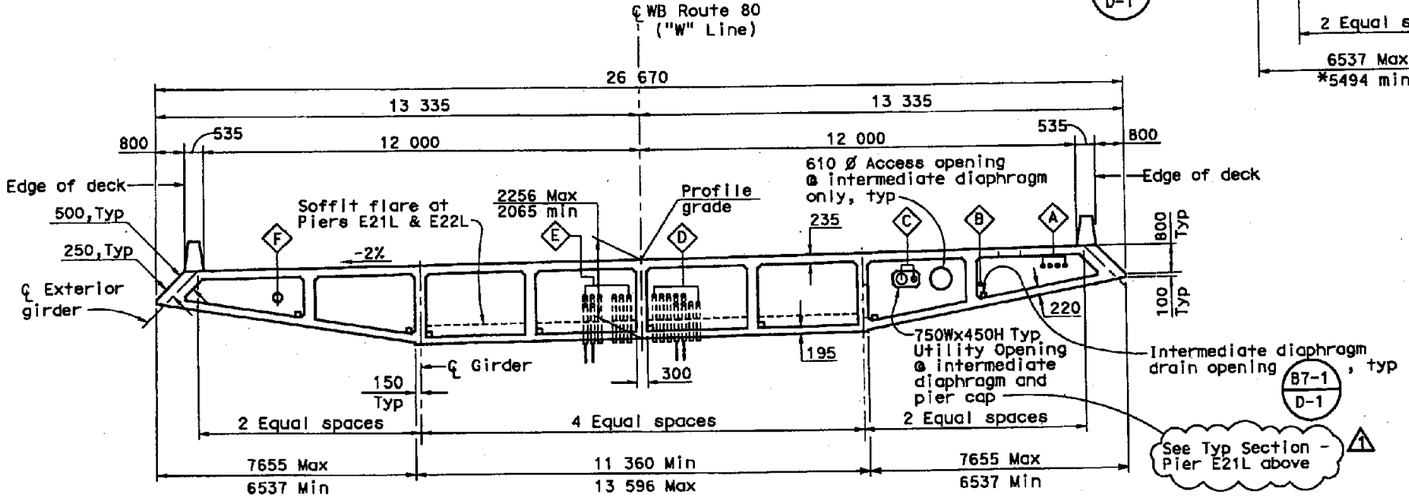

TYPICAL SECTION - PIER E21L TO PIER E22L

1:80

LEGEND

A Denotes utility designation. For types & opening sizes, see "Utility Opening Schedule" on "Westbound Typical Section No. 1" sheet
W Water
RW Reclaimed Water

MARK	DATE	DESCRIPTIONS	BY	CH'D	CCO#
1	8/14/08	UTILITY OPENING CLARIFIED	VT	JSK	
		REVISIONS			

REGISTERED PROFESSIONAL ENGINEER VINH DIEU TRINH No. 50685 Exp. 9-30-2009 CIVIL STATE OF CALIFORNIA

STAMP IS VALID FOR REVISION 1 ONLY

CONTRACT CHANGE ORDER NO. 63
SHEET 3 OF 9 04-0120L4
12/10/08

ALL DIMENSIONS ARE IN MILLIMETERS UNLESS OTHERWISE SHOWN

SAN FRANCISCO OAKLAND BAY BRIDGE
EAST SPAN SEISMIC SAFETY PROJECT

OAKLAND APPROACH STRUCTURES-PHASE 1

WESTBOUND TYPICAL SECTION NO. 2

DESIGN OVERSIGHT
SAM AKKAD FRANCISCO CARPIO BERNARD CHAN HASAN EL-NATUR
SIGN OFF DATE
Rev. Date: 5-18-98

	BY	CHECKED
DESIGN	K. Russell	A. Moubayed
DETAILS	G. Buelow	A. Moubayed
QUANTITIES	K. Russell	H. Haroun

ORIGINAL SCALE IN MILLIMETERS FOR REDUCED PLANS 0 10 20 30 40 50 60 70 80 90 100

PREPARED FOR THE STATE OF CALIFORNIA DEPARTMENT OF TRANSPORTATION

Adam Wang
PROJECT ENGINEER

CU 04
EA 0120L1

BRIDGE NO. 34-0006L/R
KILOMETER POST 1.6

DISREGARD PRINTS BEARING EARLIER REVISION DATES

REVISION DATES (PRELIMINARY STAGE ONLY) 10/20/05 8/29/06 10/27/06 2/28/05 5/24/05 11/04/05 10/14/05 6/14/05 7/28/05 1/14/08

SHEET 89 OF 224

FILE => T:\Cad\320-19\21\CCO\Utility Locations\CC063-CLOUD\04-012011-34-006-k-typsec2.dgn

To get to the Caltrans web site, go to: http://www.dot.ca.gov

MARK	DATE	DESCRIPTIONS	BY	CH'D	CCO#
1	8/14/08	UTILITY OPENING CLARIFIED	VT	JSK	

REVISIONS

Caltrans Metric

DIST	COUNTY	ROUTE	KILOMETER POST TOTAL PROJECT	SHEET NO.	TOTAL SHEETS
04	Ala	80	1.6/2.7	207R1	643

Adam Wang
REGISTERED ENGINEER - CIVIL
1-29-07
PLANS APPROVAL DATE

REGISTERED PROFESSIONAL ENGINEER ADAM TN WANG No. 40402 Exp. 3-31-2007 CIVIL STATE OF CALIFORNIA

The State of California or its officers or agents shall not be responsible for the accuracy or completeness of electronic copies of this plan sheet.

T.Y. LIN / MOFFATT & NICHOL
TWO HARRISON STREET, SUITE 500
SAN FRANCISCO, CA 94105

W. KOO & ASSOCIATES, INC
625 THE CITY DRIVE SOUTH, SUITE 200
ORANGE, CA 92868

CONTRACT CHANGE ORDER NO. 63
SHEET 4 OF 9
04-0120L4
12/10/08

REGISTERED PROFESSIONAL ENGINEER VINH DIEU TRINH No. 50685 Exp. 9-30-2009 CIVIL STATE OF CALIFORNIA

STAMP IS VALID FOR REVISION 1 ONLY

LEGEND

- Indicates girder stem width in millimeters, see B7-1 / S-3
- Ⓐ Indicates girder designation
- 0.5 L_1 Indicates the fraction of each girder length in the span noted by the subscript
- ▪▪▪▪▪ Denotes embedded conduits

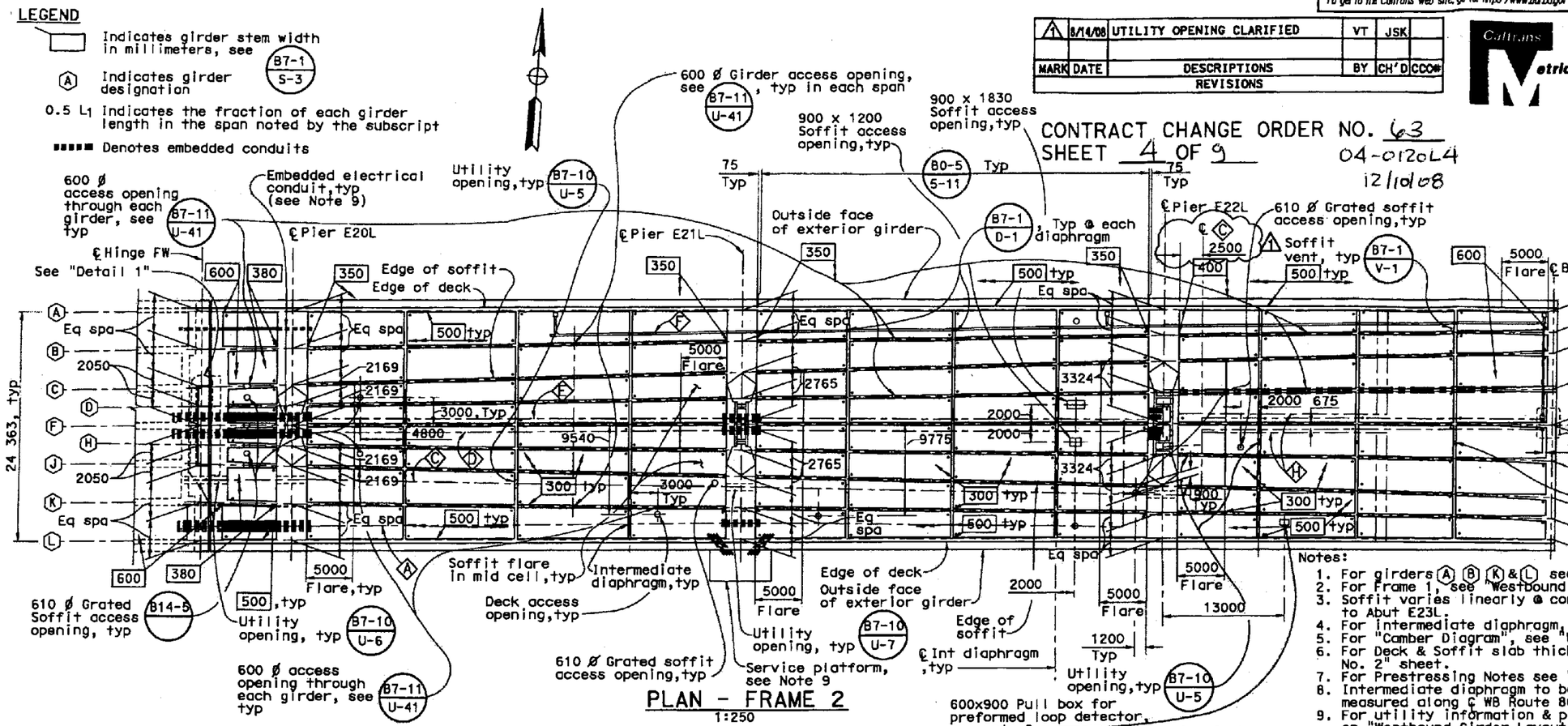

PLAN - FRAME 2
1:250

Notes:

1. For girders Ⓐ Ⓑ Ⓚ & Ⓛ see "Westbound Girder Layout No. 4" sheet.
2. For Frame 1, see "Westbound Girder Layout No. 1" sheet.
3. Soffit varies linearly @ constant rate change from Hinge FW to Abut E23L.
4. For intermediate diaphragm, see "Westbound Girder Details" sheet.
5. For "Camber Diagram", see "Westbound Camber Diagrams" sheet.
6. For Deck & Soffit slab thickness, see "Westbound Typical Section No. 2" sheet.
7. For Prestressing Notes see "Westbound Girder Layout No. 4" sheet.
8. Intermediate diaphragm to be placed radially. Dimensions shown are measured along ℄ WB Route 80.
9. For utility information & pipe supports not shown, see "Notes 9-15" on "Westbound Girder Layout No. 1" sheet.

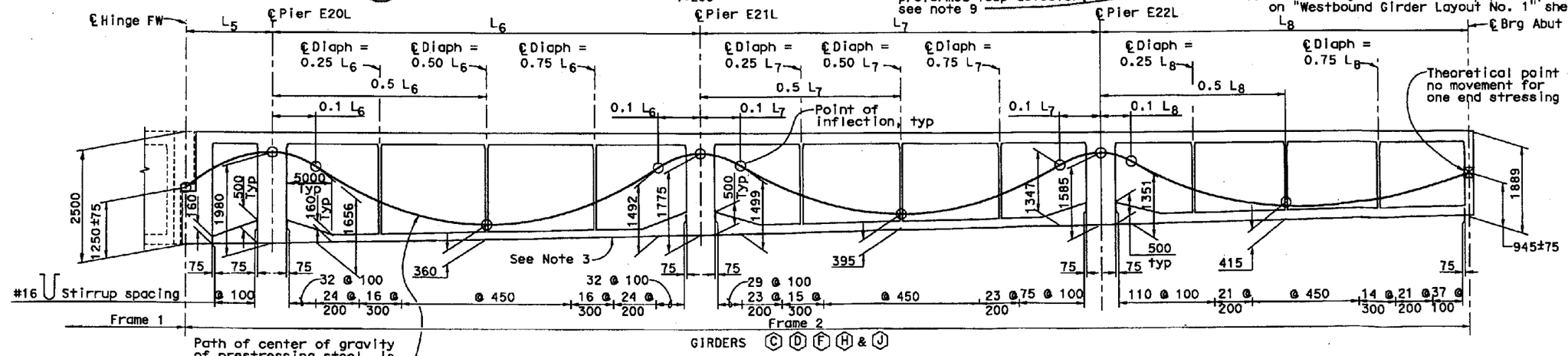

LONGITUDINAL SECTION - FRAME 2
No Scale

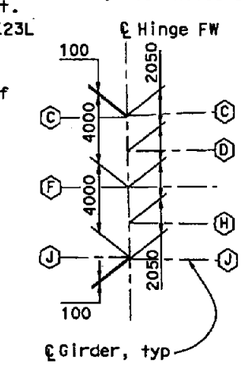

DETAIL 1
No Scale

ALL DIMENSIONS ARE IN MILLIMETERS UNLESS OTHERWISE SHOWN

SAN FRANCISCO OAKLAND BAY BRIDGE
EAST SPAN SEISMIC SAFETY PROJECT

OAKLAND APPROACH STRUCTURES-PHASE 1

WESTBOUND GIRDER LAYOUT NO. 3

DESIGN OVERSIGHT: SAM AKKAD, FRANCISCO CARPIO, BERNARD CHAN, HASAN EL-NATUR

SIGN OFF DATE

Rev. Date: 5-8-98

DESIGN	K. Russell	A. Moubayed	
DETAILS	G. Buelow	A. Moubayed	
QUANTITIES	O. Jaradat	H. Haroun	

PREPARED FOR THE STATE OF CALIFORNIA DEPARTMENT OF TRANSPORTATION

Adam Wang
PROJECT ENGINEER

BRIDGE NO. 34-0006L/R
KILOMETER POST 1.6

CU 04
EA 0120L1

DISREGARD PRINTS BEARING EARLIER REVISION DATES

REVISION DATES (PRELIMINARY STAGE ONLY): 10/08/03 3/26/04 10/26/04 2/04/05 5/26/05 11/04/05 1/27/06 5/17/06 7/28/06 1/14/08

SHEET 94 OF 224

ORIGINAL SCALE IN MILLIMETERS FOR REDUCED PLANS 0 10 20 30 40 50 60 70 80 90 100

FILE => T:\Cad\320-19\21\CCO\Utility Locations\CC063-CLOUD\04-0120L1-34-006-1-gir-lo3.dgn

USERNAME => 18781 DATE PLOTTED => 8-AUG-08 TIME PLOTTED => 07:16

DIST	COUNTY	ROUTE	KILOMETER POST TOTAL PROJECT	SHEET NO.	TOTAL SHEETS
04	Ala	80	1.6/2.7	222R1	643

Caltrans Metric

Adam Wang
REGISTERED ENGINEER - CIVIL
1-29-07
PLANS APPROVAL DATE

REGISTERED PROFESSIONAL ENGINEER ADAM TM WANG No. 40402 Exp. 3-31-2007 CIVIL STATE OF CALIFORNIA

The State of California or its officers or agents shall not be responsible for the accuracy or completeness of electronic copies of this plan sheet.

T.Y. LIN / MOFFATT & NICHOL
TWO HARRISON STREET, SUITE 500
SAN FRANCISCO, CA 94105

W. KOO & ASSOCIATES, INC
625 THE CITY DRIVE SOUTH, SUITE 200
ORANGE, CA 92868

CONTRACT NO. 04-0120L4
CCO # 63 12/10/08
Sheet 5 of 9

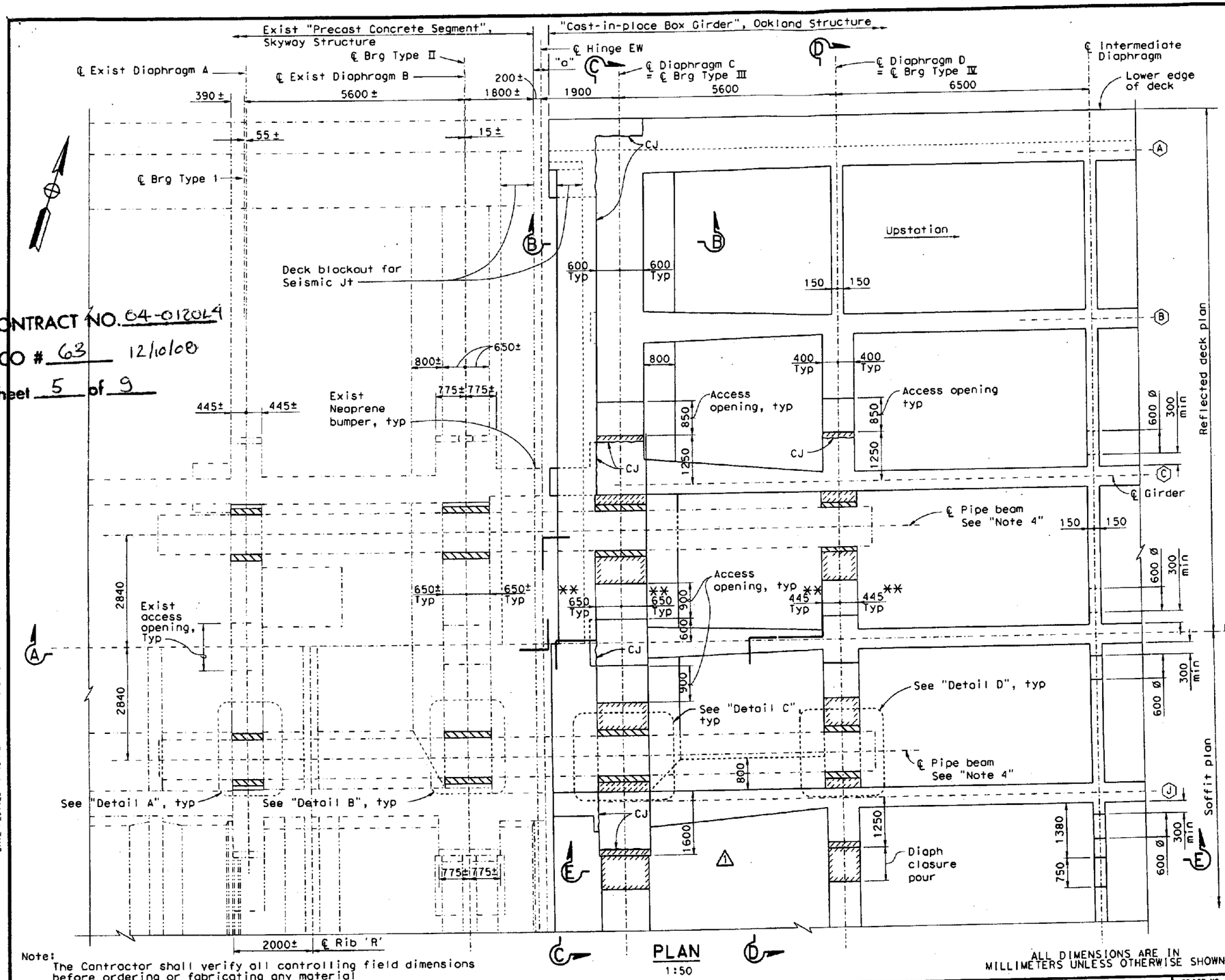

PLAN
1:50

Note:
The Contractor shall verify all controlling field dimensions before ordering or fabricating any material

ALL DIMENSIONS ARE IN MILLIMETERS UNLESS OTHERWISE SHOWN

LEGEND

- Denotes Bearing & grout installation
- Denotes Closure pour, see note 6
- Denotes Girder designation
- ** Thickened Diaphragm between girders (C) & (J) only

MARK	DATE	DESCRIPTIONS	BY	CH'D	CCO#
1	12/8/08	UTILITY OPENING ADJUSTMENT	VT	JSK	

REVISIONS

STAMP IS VALID FOR REVISION 1 ONLY

REGISTERED PROFESSIONAL ENGINEER VINH DIEU TRINH No. 50685 Exp. 9-30-2009 CIVIL STATE OF CALIFORNIA

Notes:

1. For location of Hinges EW, see "Westbound Structure Plans" sheets.
2. For Section A-A and Section D-D, see "Westbound Hinge EW Details No.2" sheet. For "Section B-B, Section C-C and Section E-E", see "Westbound Hinge EW Details No.3" sheet. For "Details A thru D", see "Hinge E Bearing Details No.1" sheet.
3. For electrical, mechanical and other embedments or inserts not shown, see "Roadway Plans".
4. Pipe beams shown in final positions. Contractor shall install pipe beams into final positions. For details of contract work at Hinge EW, see "Construction Sequence at Hinge E" sheet.
5. For dimension "a" & Seismic jt blockout details, see "Deck Joint Details" sheets.
6. Concrete strength for closure pour shall be same as concrete strength for Bridge superstructure.

SAN FRANCISCO OAKLAND BAY BRIDGE
EAST SPAN SEISMIC SAFETY PROJECT

OAKLAND APPROACH STRUCTURES-PHASE 1

WESTBOUND HINGE EW DETAILS NO.1

DESIGN OVERSIGHT
SAM AKKAD FRANCISCO CARPIO BERNARD CHAN HASAN EL-NATUR
SIGN OFF DATE

	BY	CHECKED
DESIGN	X. Wu	V. Trinh
DETAILS	A. Segura	V. Trinh
QUANTITIES	C. Lin	D. Saretsky

PREPARED FOR THE STATE OF CALIFORNIA DEPARTMENT OF TRANSPORTATION

Adam Wang
PROJECT ENGINEER

BRIDGE NO. 34-0006L/R
KILOMETER POST 1.6

CU 04
EA 0120L1

DISREGARD PRINTS BEARING EARLIER REVISION DATES

REVISION DATES (PRELIMINARY STAGE ONLY) 1/30/04 10/29/04 2/11/05 12/14/05 1/31/06 1/12/06 7/12/06 11/16/06 12/8/08

SHEET 109R1 OF 224

ORIGINAL SCALE IN MILLIMETERS FOR REDUCED PLANS 0 10 20 30 40 50 60 70 80 90 100

Rev. Date: 5-18-98

FILENAME => $FILE$ DATE PLOTTED => $DATE$ TIME PLOTTED => $TIME$

DIST	COUNTY	ROUTE	KILOMETER POST TOTAL PROJECT	SHEET NO.	TOTAL SHEETS
04	Ala	80	1.6/2.7	223R2	643

Caltrans Metric

Adam Wang
REGISTERED ENGINEER - CIVIL

1-29-07
PLANS APPROVAL DATE

REGISTERED PROFESSIONAL ENGINEER ADAM TW WANG No. 40402 Exp. 3-31-2007 CIVIL STATE OF CALIFORNIA

The State of California or its officers or agents shall not be responsible for the accuracy or completeness of electronic copies of this plan sheet.

T.Y. LIN / MOFFATT & NICHOL
TWO HARRISON STREET, SUITE 500
SAN FRANCISCO, CA 94105

W. KOO & ASSOCIATES, INC
625 THE CITY DRIVE SOUTH, SUITE 200
ORANGE, CA 92868

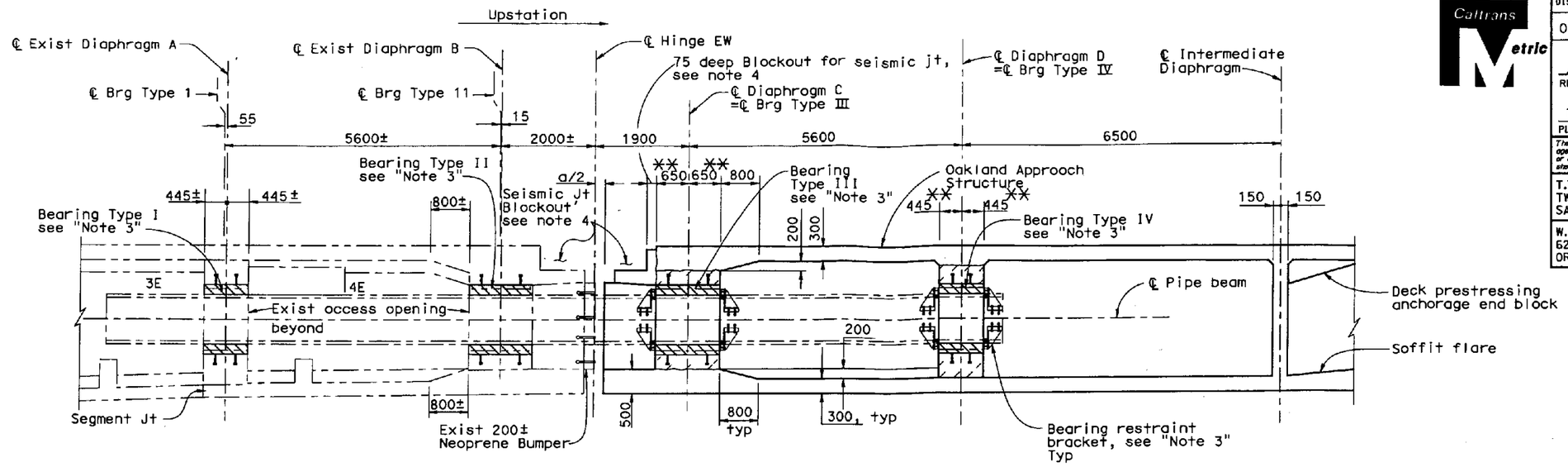

(Expansion Bearings) **SECTION A-A** (Fixed Bearings)
1:50

REGISTERED PROFESSIONAL ENGINEER VINH DIEU TRINH No. 50685 Exp. 9-30-2009 CIVIL STATE OF CALIFORNIA

STAMP IS VALID FOR REVISION 2 ONLY

MARK	DATE	DESCRIPTIONS	BY	CH'D	CCO#
1	7/21/08	NOTE 5 DELETED	VT	JSK	
2	7/21/08	REVISE UTILITY OPENING LOCATION	VT	JSK	

REVISIONS

CONTRACT CHANGE ORDER NO. 63
SHEET 6 OF 9 04-0120L4
12/10/08

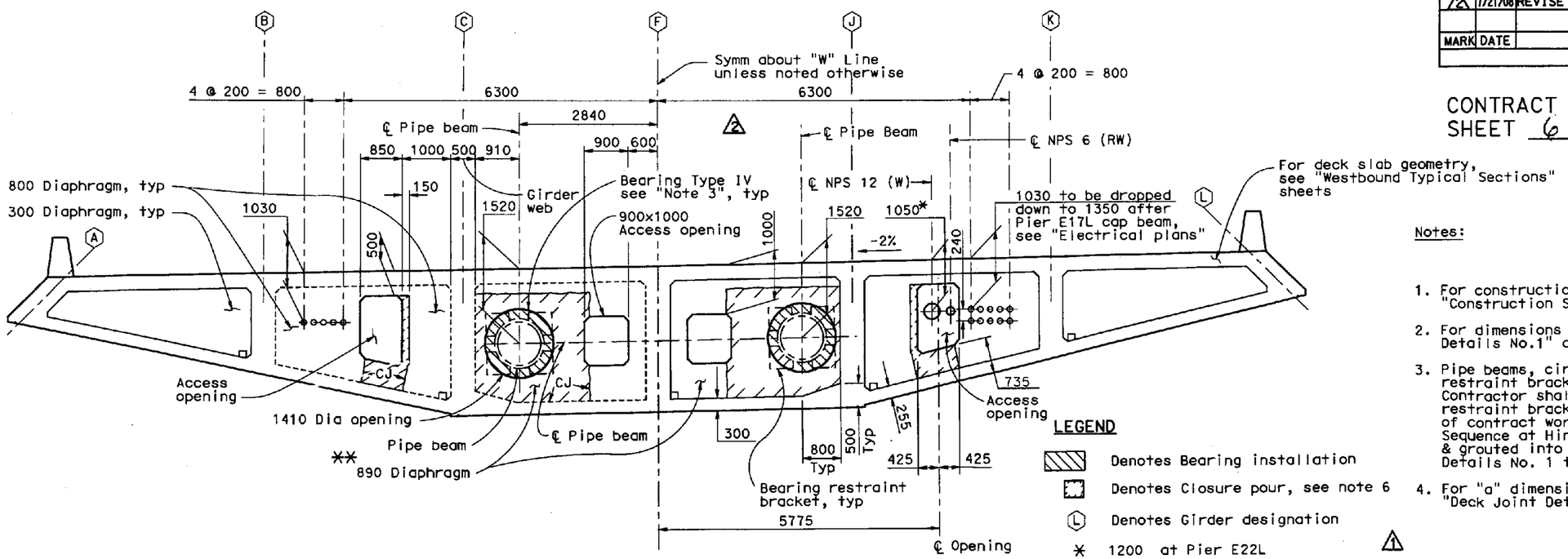

SECTION D-D
1:50

LEGEND

- Denotes Bearing installation
- Denotes Closure pour, see note 6
- (L) Denotes Girder designation
- * 1200 at Pier E22L
- ** Thickened Diaphragm between girders (C) & (J) only

Notes:

1. For construction of the hinge assembly, see "Construction Sequence at Hinge E" sheet.
2. For dimensions not shown, see "Westbound Hinge EW Details No.1" and "Westbound Hinge EW Details No.3".
3. Pipe beams, circular segmented bearings and bearing restraint brackets shown in final positions. Contractor shall install pipe beams, bearings and restraint brackets into final positions. For details of contract work at Hinge EW, see "Construction Sequence at Hinge E"sheet. For Bearing assemblies & grouted into final position, see "Hinge E Bearing Details No. 1 thru 5" sheets.
4. For "a" dimension and Seismic Jt blockout detail, see "Deck Joint Details" sheet.
6. Concrete strength for closure pour shall be same as concrete strength for Bridge superstructure.

Note:
The Contractor shall verify all controlling field dimensions before ordering or fabricating any material

ALL DIMENSIONS ARE IN MILLIMETERS UNLESS OTHERWISE SHOWN

SAN FRANCISCO OAKLAND BAY BRIDGE
EAST SPAN SEISMIC SAFETY PROJECT

OAKLAND APPROACH STRUCTURES-PHASE 1

WESTBOUND HINGE EW DETAILS NO.2

DESIGN OVERSIGHT
SAM AKKAD FRANCISCO CARPIO BERNARD CHAN HASAN EL-NATUR
SIGN OFF DATE
Rev. Date: 5-18-98

	BY	CHECKED
DESIGN	X. Wu	V. Trinh
DETAILS	A. Segura	V. Trinh
QUANTITIES	C. Lin	D. Saretsky

PREPARED FOR THE STATE OF CALIFORNIA DEPARTMENT OF TRANSPORTATION

Adam Wang
PROJECT ENGINEER

CU 04
EA 0120L1

BRIDGE NO. 34-0006L/R
KILOMETER POST 1.6

DISREGARD PRINTS BEARING EARLIER REVISION DATES

REVISION DATES (PRELIMINARY STAGE ONLY) 1/20/04 10/29/04 2/18/05 5/24/05 11/14/05 1/31/06 4/17/06 7/28/06 11/16/06 7/21/08

SHEET 110 OF 224

ORIGINAL SCALE IN MILLIMETERS FOR REDUCED PLANS 0 10 20 30 40 50 60 70 80 90 100

DIST	COUNTY	ROUTE	KILOMETER POST TOTAL PROJECT	SHEET NO.	TOTAL SHEETS
04	Ala	80	1.6/2.7	224R2	643

Caltrans Metric

Adam Wang
REGISTERED ENGINEER - CIVIL

1-29-07
PLANS APPROVAL DATE

The State of California or its officers or agents shall not be responsible for the accuracy or completeness of electronic copies of this plan sheet.

REGISTERED PROFESSIONAL ENGINEER ADAM TM WANG No. 40402 Exp. 3-31-2007 CIVIL STATE OF CALIFORNIA

T.Y. LIN / MOFFATT & NICHOL
TWO HARRISON STREET, SUITE 500
SAN FRANCISCO, CA 94105

W. KOO & ASSOCIATES, INC
625 THE CITY DRIVE SOUTH, SUITE 200
ORANGE, CA 92868

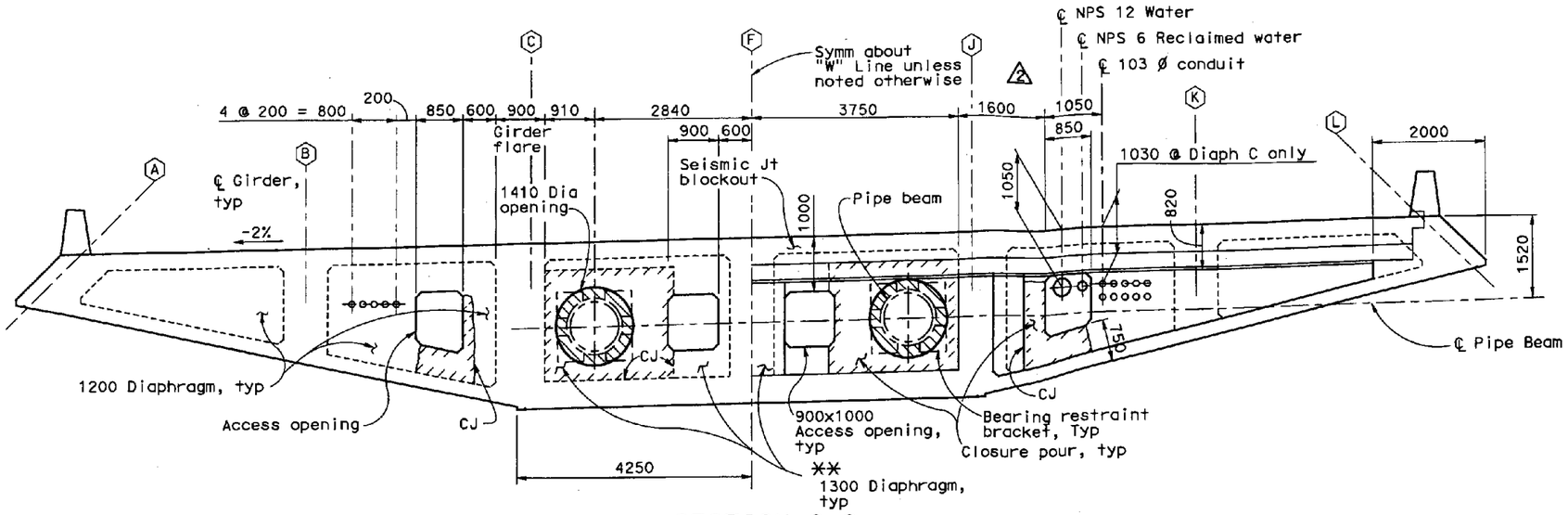

SECTION C-C
1:50

LEGEND

- Denotes Bearing installation
- Denotes Closure pour, see note 4
- (L) Denotes Girder designation
- ✳✳ Thickened Diaphragm between girders (C) & (J) only

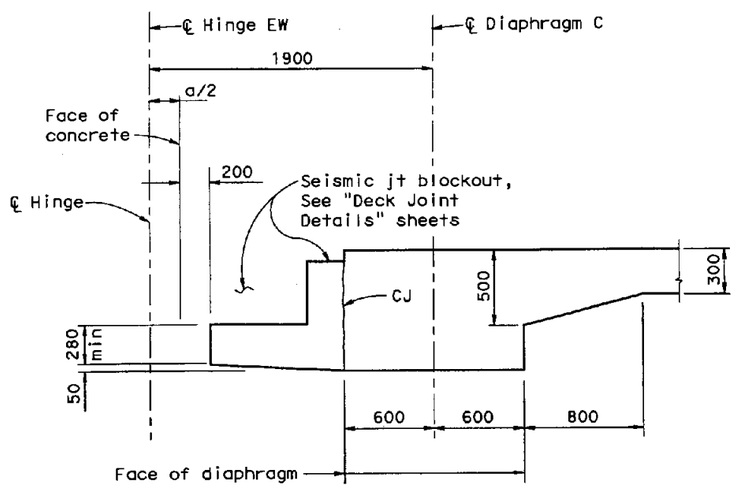

SECTION B-B
1:20

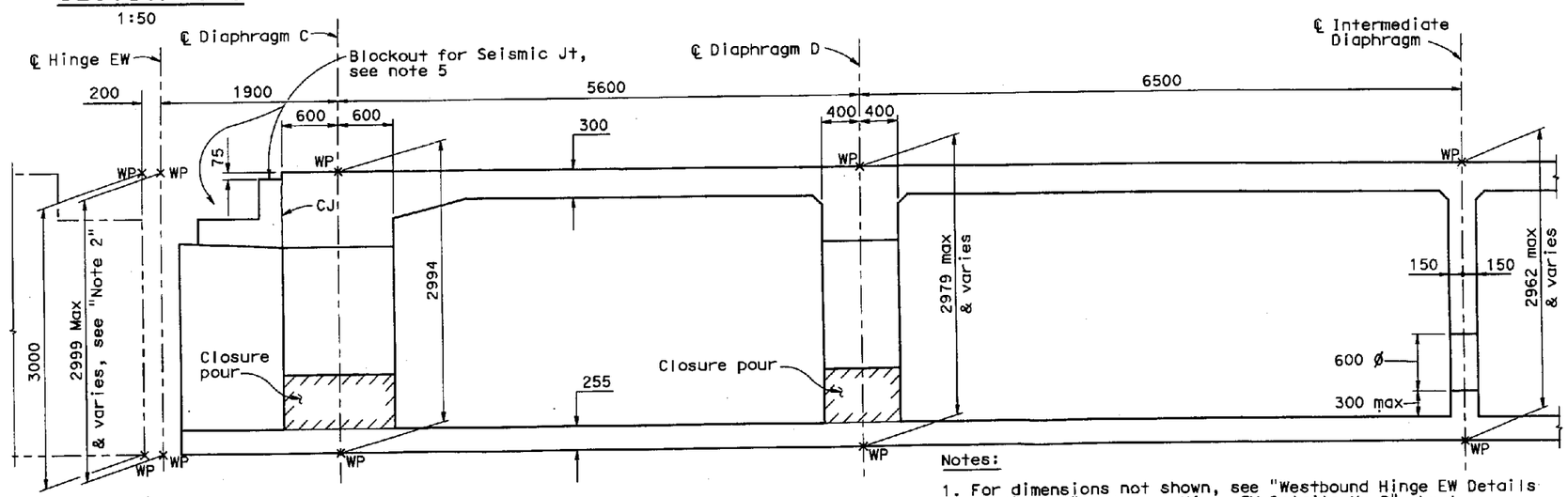

SECTION E-E
No Scale

Notes:

1. For dimensions not shown, see "Westbound Hinge EW Details No.1" and "Westbound Hinge EW Details No.2" sheets.
2. Working points (WP) are set based on 3.000 m at end of segment 4E in skyway structure and 2.500 m at ℄ Hinge FW.
3. ⚠1
4. Concrete strength for closure pour shall be same as concrete strength for Bridge superstructure.
5. For dimension "a" & Blockout details, see "Deck Joint Details" sheet.

MARK	DATE	DESCRIPTIONS	BY	CH'D	CCO#
⚠1	7/21/08	NOTE 3 DELETED	VT	JSK	
⚠2	7/21/08	REVISE UTILITY OPENING LOCATION	VT	JSK	

REVISIONS

REGISTERED PROFESSIONAL ENGINEER VINH DIEU TRINH No. 50685 Exp. 9-30-2009 CIVIL STATE OF CALIFORNIA

STAMP IS VALID FOR REVISION ⚠2 ONLY

CONTRACT CHANGE ORDER NO. 63
SHEET 7 OF 9 04-0120L4
12/10/08

ALL DIMENSIONS ARE IN MILLIMETERS UNLESS OTHERWISE SHOWN

Note:
The Contractor shall verify all controlling field dimensions before ordering or fabricating any material

DESIGN OVERSIGHT
SAM AKKAD FRANCISCO CARPIO BERNARD CHAN HASAN EL-NATUR
SIGN OFF DATE
Rev. Date: 5-18-98

	BY	CHECKED
DESIGN	X. Wu	V. Trinh
DETAILS	A. Segura	V. Trinh
QUANTITIES	C. Lin	D. Saretsky

ORIGINAL SCALE IN MILLIMETERS FOR REDUCED PLANS 0 10 20 30 40 50 60 70 80 90 100

PREPARED FOR THE STATE OF CALIFORNIA DEPARTMENT OF TRANSPORTATION

Adam Wang
PROJECT ENGINEER

CU 04
EA 0120L1

BRIDGE NO. 34-0006L/R
KILOMETER POST 1.6

SAN FRANCISCO OAKLAND BAY BRIDGE
EAST SPAN SEISMIC SAFETY PROJECT

OAKLAND APPROACH STRUCTURES-PHASE 1

WESTBOUND HINGE EW DETAILS NO.3

DISREGARD PRINTS BEARING EARLIER REVISION DATES → 8/20/04 10/20/04 1/14/05 5/24/05 11/21/05 1/31/06 4/3/06 7/28/06 11/6/06 7/21/08

SHEET 111 OF 224

FILE => t:\cad\320-19\21\CCO\AnchorageCCO\CC063-NO CLOUD\04-012011-34-006-n-hinge3.dgn

DIST	COUNTY	ROUTE	KILOMETER POST TOTAL PROJECT	SHEET NO.	TOTAL SHEETS
04	Ala	80	1.6/2.7	261R1	643

Adam Wang
REGISTERED ENGINEER - CIVIL
1-29-07
PLANS APPROVAL DATE
REGISTERED PROFESSIONAL ENGINEER ADAM TM WANG No. 40402 Exp. 3-31-2007 CIVIL STATE OF CALIFORNIA

The State of California or its officers or agents shall not be responsible for the accuracy or completeness of electronic copies of this plan sheet.

T.Y. LIN / MOFFATT & NICHOL
TWO HARRISON STREET, SUITE 500
SAN FRANCISCO, CA 94105

W. KOO & ASSOCIATES, INC
625 THE CITY DRIVE SOUTH, SUITE 200
ORANGE, CA 92868

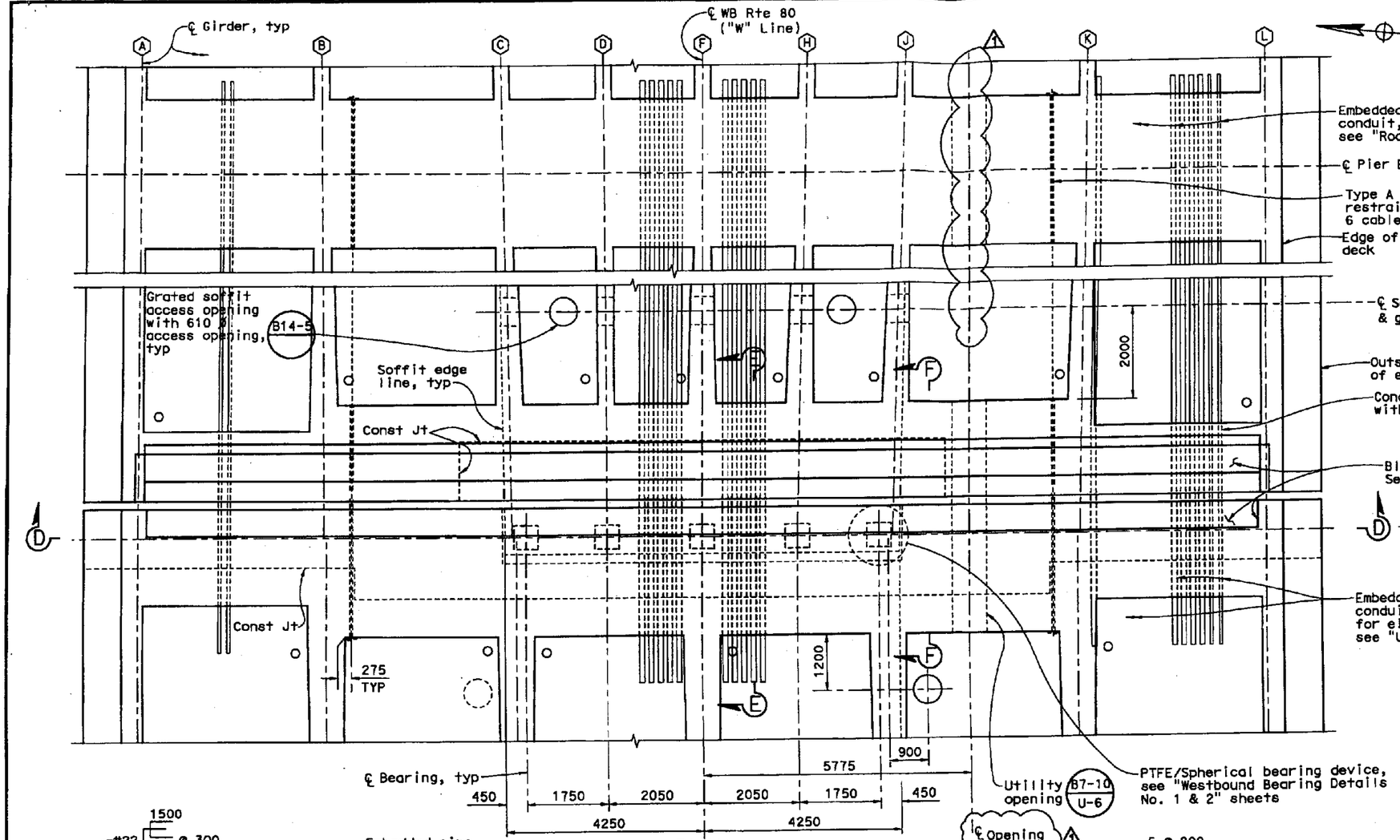

PLAN
1:50

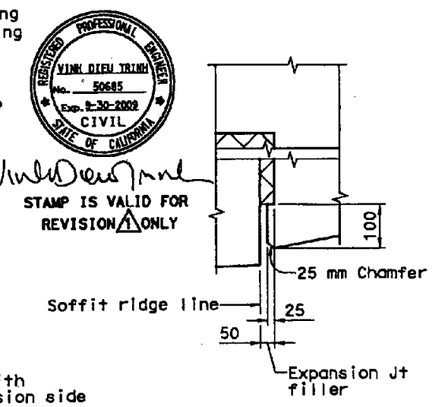

DETAIL 1
No Scale

REGISTERED PROFESSIONAL ENGINEER VINH DIEU TRINH No. 50685 Exp. 9-30-2009 CIVIL STATE OF CALIFORNIA
STAMP IS VALID FOR REVISION 1 ONLY

MARK	DATE	DESCRIPTIONS	BY	CH'D	CCO#
1	8/14/08	REVISE UTILITY OPENING LOCATION	VT	JSK	
		REVISIONS			

CONTRACT CHANGE ORDER NO. 63
SHEET 8 OF 9 04-0120L4
12/10/08

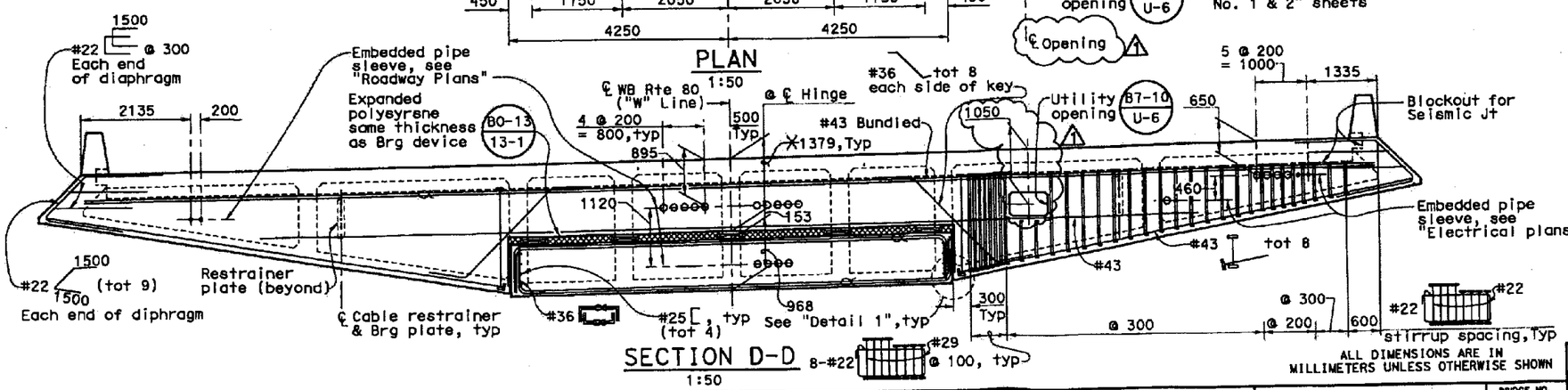

SECTION D-D
1:50

ALL DIMENSIONS ARE IN MILLIMETERS UNLESS OTHERWISE SHOWN

LEGEND

- (A) Denotes girder designation
- Denotes bundled bars
- Denotes headed bar (both ends)
- Denotes headed bar (one end)
- ✳ Depth includes 410 mm max blockout for joint seal assembly

Notes:

1. For longitudinal restrainer details, see Restrainer Unit Details No. 1 & 2" sheets.
2. For "Section E-E", see "Westbound Hinge FW Details No. 2" sheet.
3. For "Section F-F", see "Westbound Hinge FW Details No. 3" sheet.
4. For Hinge Cantilever and Suspension end reinforcement layout, see "Westbound Hinge FW Details No. 4" sheet.

SAN FRANCISCO OAKLAND BAY BRIDGE
EAST SPAN SEISMIC SAFETY PROJECT

OAKLAND APPROACH STRUCTURES-PHASE 1

WESTBOUND HINGE FW DETAILS NO.1

DESIGN OVERSIGHT
SAM AKKAD FRANCISCO CARPIO BERNARD CHAN HASAN EL-NATUR
SIGN OFF DATE
Rev. Date: 5-12-98

	BY	CHECKED
DESIGN	X. Wu	A. Moubayed
DETAILS	G. Buelow	A. Wang
QUANTITIES	O. Jaradat	H. Haroun

PREPARED FOR THE DEPARTMENT OF TRANSPORTATION

Adam Wang
PROJECT ENGINEER

CU 04
EA 0120L1

BRIDGE NO. 34-0006L/R
KILOMETER POST 1.6

DISREGARD PRINTS BEARING EARLIER REVISION DATES 1/29/04 10/22/04 1/24/05 5/24/05 11/8/05 1/20/06 4/21/06 7/21/06 11/8/06 8/14/08

SHEET 148 OF 224

ORIGINAL SCALE IN MILLIMETERS FOR REDUCED PLANS 0 10 20 30 40 50 60 70 80 90 100

FILE => T:\Cad\320-19\21\CCO\Utility Locations\CC063-CLOUD\04-012011-34-006-n-hingefw1.dgn

MARK	DATE	DESCRIPTIONS	BY	CH'D	CCO#
1	3/17/08	JOINT IMPROVEMENT, ADD DOWELS & DELETE JT REINF	AW	VT	
2	7/21/08	REVISE UTILITY OPENING LOCATION	VT	JSK	

REVISIONS

DIST	COUNTY	ROUTE	KILOMETER POST TOTAL PROJECT	SHEET NO.	TOTAL SHEETS
04	Ala	80	1.6/2.7	263R2	643

Caltrans Metric

Adam Wang
REGISTERED ENGINEER - CIVIL
1-29-07
PLANS APPROVAL DATE

REGISTERED PROFESSIONAL ENGINEER ADAM TM WANG No. 40402 Exp. 3-31-2009 CIVIL STATE OF CALIFORNIA

The State of California or its officers or agents shall not be responsible for the accuracy or completeness of electronic copies of this plan sheet.

T.Y. LIN / MOFFATT & NICHOL
TWO HARRISON STREET, SUITE 500
SAN FRANCISCO, CA 94105

W. KOO & ASSOCIATES, INC
625 THE CITY DRIVE SOUTH, SUITE 200
ORANGE, CA 92868

REGISTERED PROFESSIONAL ENGINEER VINH DIEU TRINH No. 50685 Exp. 9-30-2009 CIVIL STATE OF CALIFORNIA

STAMP IS VALID FOR REVISION 2 ONLY

CONTRACT CHANGE ORDER NO. 63
SHEET 9 OF 9 04-0120L3
12/10/08

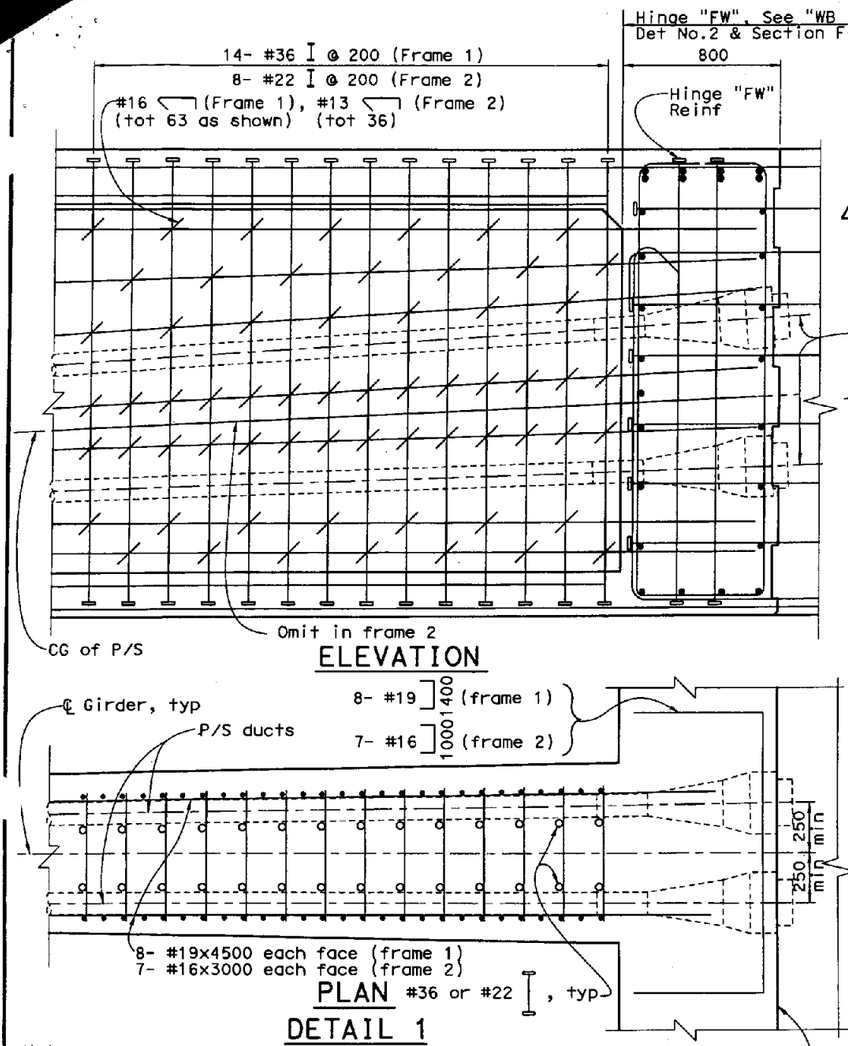

LEGEND

- Denotes mechanical splice
- Denotes bundled bars
- Denotes headed bar (both ends)

1 Note:
Additional bursting reinf shown @ end of frame 1 is typical for each interior Girder, reinf for each interior Girder @ beginning of frame 2 is similar but opposite hand.

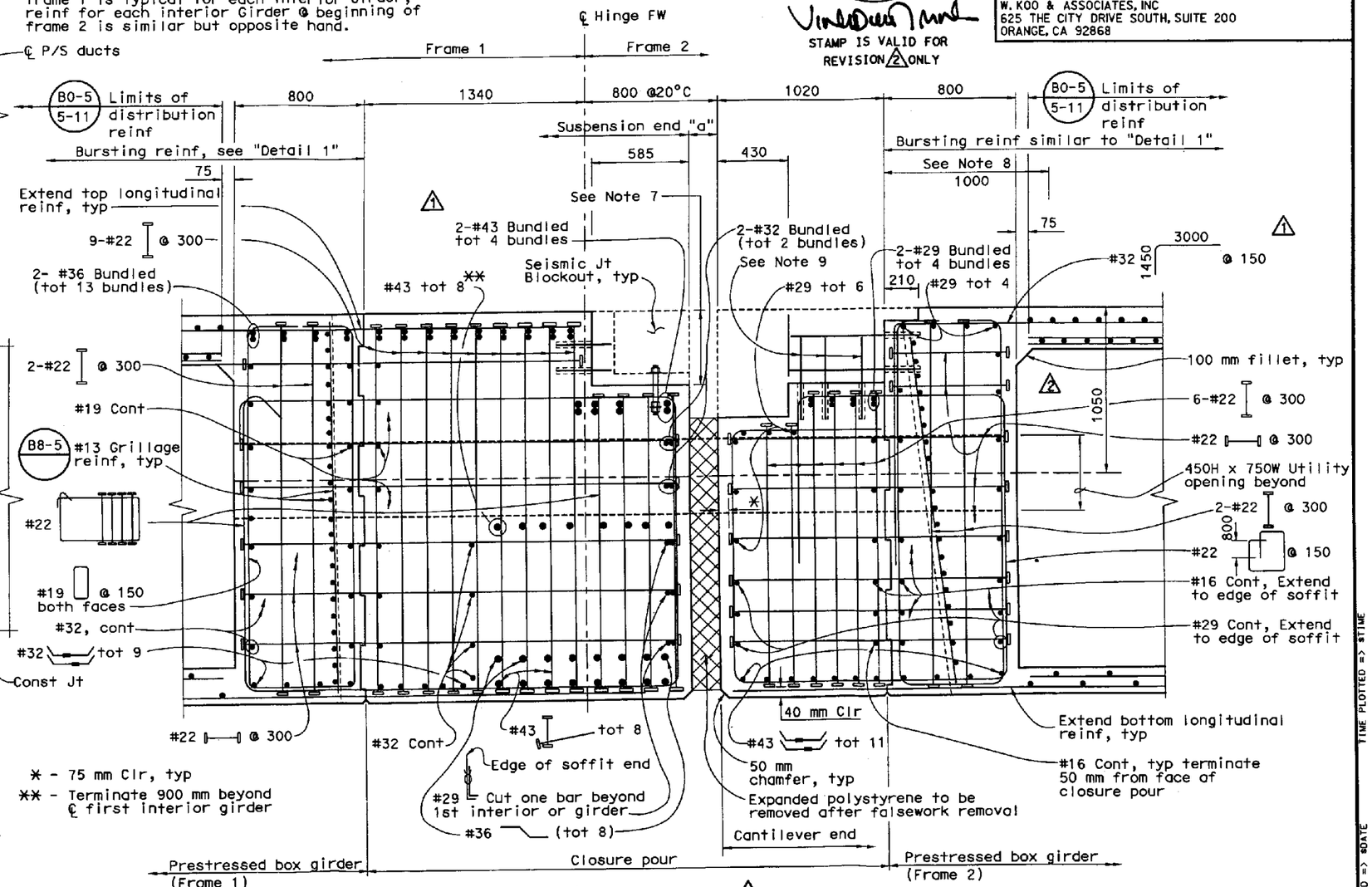

* - 75 mm Clr, typ
** - Terminate 900 mm beyond ℄ first interior girder

Notes:

1. Reinforcement may be moved or bundled in 2-bar bundles to clear utility openings and expansion Jt assembly. Bend reinf to clear seismic joint assembly as required.
2. Blockout size shall be determined by the Contractor and approved by the Engineer.
3. No lap splices allowed in main diaphragm reinforcement.
4. Closure pour, as indicated, shall be cast-in-place concrete and placed after cantilever end of hinge is constructed and bearing assemblies are properly positioned. Concrete shall be same strength as cast-in-place prestressed concrete. Falsework shall remain in place until prestress in box girder structure has been completed.
5. See Bridge Details B0-13 13-1 and B0-13 13-2
6. For "a" dimension and blockout details, see "Deck Joint Details" sheet.
7. Blockout depth is assumed to be 450 mm max. Contractor shall submit the adjusted detail of reinf for approval, if the blockout depth is altered.
8. 1 75 mm Clr min shall be maintained for longitudinal reinf @ top layer of deck & diaphragm rebars & top end of vertical headed bars after deck ground off for simisic jt. Bend longitudinal reinf as required.
9. 1 For reinforcement and anchor bolts at deck joint blockouts, see "Seismic Joint" sheets.
10. See Note 10 on "Westbound Hinge FW Details No. 2" sheet.

SECTION F-F
1:15

1 Note:
For information not shown, see "Section E-E" on "Westbound Hinge FW Details No.2" sheet

ALL DIMENSIONS ARE IN MILLIMETERS UNLESS OTHERWISE SHOWN

SAN FRANCISCO OAKLAND BAY BRIDGE
EAST SPAN SEISMIC SAFETY PROJECT

OAKLAND APPROACH STRUCTURES-PHASE 1

WESTBOUND HINGE FW DETAILS NO.3

DESIGN OVERSIGHT
SAM AKKAD FRANCISCO CARPIO BERNARD CHAN HASAN EL-NATUR
SIGN OFF DATE
Rev. Date: 5-18-98

	BY	CHECKED
DESIGN	X. Wu	A. Moubayed
DETAILS	G. Buelow	A. Moubayed
QUANTITIES	X. Wu	H. Haroun

PREPARED FOR THE STATE OF CALIFORNIA DEPARTMENT OF TRANSPORTATION

Adam Wang
PROJECT ENGINEER

CU 04
EA 0120L1

BRIDGE NO. 34-0006L/R
KILOMETER POST 1.6

DISREGARD PRINTS BEARING EARLIER REVISION DATES

REVISION DATES (PRELIMINARY STAGE ONLY): 2/18/05 6/24/05 11/14/05 1/31/06 4/17/06 7/28/06 11/14/06 10/22/07 3/31/08 7/21/08

SHEET 150 OF 224

ORIGINAL SCALE IN MILLIMETERS FOR REDUCED PLANS 0 10 20 30 40 50 60 70 80 90 100

FILE => t:\cad\320-19\21\CCO\AnchorageCCO\CC063-NO CLOUD\04-012011-34-006-n-hingexfwdet1.dgn

USERNAME => $USER DATE PLOTTED => $DATE TIME PLOTTED => $TIME

STATE OF CALIFORNIA - DEPARTMENT OF TRANSPORTATION

CONTRACT CHANGE ORDER MEMORANDUM

DATE: 7/14/2008 Page 1 of 1

TO: AMER BATA / BEN GHAFGHAZI	FILE: E.A. 04 - 0120L4
FROM: BEN GHAFGHAZI	CO-RTE-PM ALA-80-1.6/2.7
	FED. NO. NO FED AID
CCO#: 63 SUPPLEMENT#: 0 Category Code: CHPT	CONTINGENCY BALANCE (incl. this change) $13,632,922.20
COST: $0.00 INCREASE ☐ DECREASE ☐	HEADQUARTERS APPROVAL REQUIRED? ☐ YES ☑ NO
SUPPLEMENTAL FUNDS PROVIDED: $0.00	IS THIS REQUEST IN ACCORDANCE WITH ENVIRONMENTAL DOCUMENTS? ☑ YES ☐ NO
CCO DESCRIPTION: Revise Utility Opening Location @WB Stru	**PROJECT DESCRIPTION:** Construct bridge, roadway, building and electrical system.

Original Contract Time:	Time Adj. This Change:	Previously Approved CCO Time Adjustments:	Percentage Time Adjusted: (including this change)	Total # of Unreconciled Deferred Time CCO(s): (including this change)
810 Day(s)	0 Day(s)	0 Day(s)	0 %	6

THIS CHANGE ORDER PROVIDES FOR:

Revising the location of utility openings in the westbound Oakland Touchdown superstructure from Hinge EW to Hinge FW (Frame 1) and Hinge FW to Abutment 23 (Frame 2) as shown on sheets 2 of 9 through 9 of 9 of the CCO. The CCO sheets shall replace sheets 201, 202, 207, 222, 223, 224, 261, and 263 of 643 of the contract plans.

The details on various plan sheets regarding location of utility openings was not consistent. This change is necessary to resolve the discrepancies in the plan sheets to ensure that the utility lines will fit in the bridge as originally intended.

This change has been discussed and concurred with Hasan El-Natur, Structures Design, Jal Birdy, structure designer for Moffat and Nichol and Lina Ellis, Structures Maintenance.

There shall be no cost associated with this CCO. A detailed cost analysis is on file.

No adjustment of contract time is warranted since this change does not affect the controlling operation.

CONCURRED BY:

Construction Engineer:	Ben Ghafghazi	Date	12/10/08
Bridge Engineer:	Mehran Ardakanian	Date	12/10/08
Project Engineer:	Hasan El-Natur, Structures Design	Date	7/14/08
Project Manager:		Date	
FHWA Rep.:		Date	
Environmental:		Date	
Other (specify):	Jal Birdy, Moffat Nichol	Date	7/14/08
Other (specify):	Lina Ellis, Structures Maint.	Date	8/22/08
District Prior Approval By:		Date	
HQ (Issue Approve) By:		Date	
Resident Engineer's Signature:		Date	12/10/08

ESTIMATE OF COST

	THIS REQUEST	TOTAL TO DATE
ITEMS	$0.00	$0.00
FORCE ACCOUNT	$0.00	$0.00
AGREED PRICE	$0.00	$0.00
ADJUSTMENT	$0.00	$0.00
TOTAL	$0.00	$0.00

FEDERAL PARTICIPATION

☐ PARTICIPATING ☐ PARTICIPATING IN PART ☑ NONE
☐ NON-PARTICIPATING (MAINTENANCE) ☐ NON-PARTICIPATING

FEDERAL SEGREGATION (if more than one Funding Source or P.I.P. type)
☑ CCO FUNDED PER CONTRACT ☐ CCO FUNDED AS FOLLOWS

FEDERAL FUNDING SOURCE	PERCENT

ADA Notice: For individuals with sensory disabilities, this document is available in alternate formats. For information call: (916) 654-6410 or TDD (916) 654-3880 or write Records and Forms Management, 1120 N Street, MS-89, Sacramento, CA 95814.

CONTRACT CHANGE ORDER

Change Requested by: Engineer

CCO: 64	Suppl. No. 0	Contract No. 04 - 0120L4	Road ALA-80-1.6/2.7	FED. AID LOC.: NO FED AID

To: **M C M CONSTRUCTION INC**

You are directed to make the following changes from the plans and specifications or do the following described work not included in the plans and specifications for this contract. ***NOTE: This change order is not effective until approved by the Engineer.***

Description of work to be done, estimate of quantities and prices to be paid. (Segregate between additional work at contract price, agreed price and force account.) Unless otherwise stated, rates for rental of equipment cover only such time as equipment is actually used and no allowance will be made for idle time. This last percentage shown is the net accumulated increase or decrease from the original quantity in the Engineer's Estimate.

Provide smooth finish to sloped soffit sections of Oakland Touchdown superstructure.

Extra Work at Force Account:

Provide Class 1 surface finish in accordance with Section 51-1.18B, "Class 1 Surface Finish," of the Standard Specifications for the undersurfaces of box girders bridge. This work shall be performed by light sand blasting as determined by the Engineer, after the Ordinary Surface Finish as required by Section 51-1.18A, "Ordinary Surface Finish," of the Standard Specifications is obtained.

Estimated cost of Extra Work at Force Account $100,000.00

Extra Work at Lump Sum:

Utilize new 9.5 mm (3/8") high density overlay (HDO) plywood forms over the existing plywood forms for undersurfaces of box girders bridge to simulate concrete surface smoothness equivalent to usage of steel forms. For this work, the contractor will be paid the sum of $659,250.00. This sum constitutes full compensation, including markups, for this change.

Extra Work at Lump Sum $659,250.00

Estimated Cost: Increase ☑ Decrease ☐ **$759,250.00**

By reason of this order the time of completion will be adjusted as follows: 0 days

Submitted by

Signature	Resident Engineer BEN GHAFGHAZI	Date 8/28/08

Approval Recommended by

Signature	Construction Manager Amer Bata	Date 8/29/08

Engineer Approval by

Signature	Construction Manager Amer Bata	Date 9/9/08

We the undersigned contractor, have given careful consideration to the change proposed and agree, if this proposal is approved, that we will provide all equipn furnish the materials, except as may otherwise be noted above, and perform all services necessary for the work above specified, and will accept as full paymer therefor the prices shown above.

NOTE: If you, the contractor, do not sign acceptance of this order, your attention is directed to the requirements of the specifications as to proceeding with the ordered work and filing a written protest within the time therein specified.

Contractor Acceptance by

Signature	(Print name and title) EDMUNDO A. PUCHI, TREASURER	Date 9/4/08

STATE OF CALIFORNIA - DEPARTMENT OF TRANSPORTATION

CONTRACT CHANGE ORDER MEMORANDUM

DATE: 8/6/2008 Page 1 of 1

TO: AMER BATA / BEN GHAFGHAZI	FILE: E.A. 04 - 0120L4
FROM: BEN GHAFGHAZI	CO-RTE-PM ALA-80-1.6/2.7
	FED. NO. NO FED AID
CCO#: 64 SUPPLEMENT#: 0 Category Code: CHSB	CONTINGENCY BALANCE (incl. this change) $13,732,922.20
COST: $759,250.00 INCREASE ☑ DECREASE ☐	HEADQUARTERS APPROVAL REQUIRED? ☑ YES ☐ NO
SUPPLEMENTAL FUNDS PROVIDED: $0.00	IS THIS REQUEST IN ACCORDANCE WITH ENVIRONMENTAL DOCUMENTS? ☑ YES ☐ NO
CCO DESCRIPTION: Provide Class 1 Finish on Soffits	**PROJECT DESCRIPTION:** Construct bridge, roadway, building and electrical system.

Original Contract Time:	Time Adj. This Change:	Previously Approved CCO Time Adjustments:	Percentage Time Adjusted: (including this change)	Total # of Unreconciled Deferred Time CCO(s): (including this change)
810 Day(s)	0 Day(s)	0 Day(s)	0 %	6

THIS CHANGE ORDER PROVIDES FOR:

Utilizing 9.5 mm high density overlay (HDO) plywood form work and other suitable methods as approved by the Engineer to provide concrete surface smoothness equivalent to usage of steel forms to the sloped soffit section of the Oakland Touchdown Bridge superstructure. Providing Class 1 surface finish in accordance with Section 51-1.18B, "Class 1 Surface Finish," of the Standard Specifications, over this same area. This shall be after obtaining Ordinary Surface Finish as required by Section 51-1.18A, "Ordinary Surface Finish," of the Standard Specifications. Performing light sandblast to sloped soffit as determined necessary by the Engineer to obtain consistent surface appearance.

Section 51-1.18, "Surface Finishes," of the Standard Specifications, does not require the undersides of slab and box girder spans to have a Class 1 finish. Section 51-1.18 only requires an ordinary surface finish in these locations. A future park is planned in the vicinity of the structure. Because of the high public visibility, it has been requested that the structure should be architecturally pleasing to the eye and therefore the structure should have smooth, even surfaces of uniform texture and appearance, free of unsightly bulges, depressions and other imperfections. To ensure a smooth, uniform surface, the contractor will be required to add a new layer of building form work to the sloped soffit forms and sandblast as determined necessary.

This CCO has been requested by Ade Akinsanya of Structures Design. This change has been discussed and concurred with Brian Maroney, Toll Design Manager, Mike Forner, Principal Construction Engineer, Jon Tapping, Headquarters Construction, Ken Terpstra, Project Manager, and Clive Endress of Landscape Architecture. Maintenance concurrence is not required since there are no structural changes to the bridge. Issue and approve was granted by Headquarters on September 2, 2008.

Payment for this work will be Extra Work at Lump Sum of $659,250.00 for the formwork and Extra Work at Force Account of $100,000 for Class 1 finish and sandblasting. This work can be financed from the contingency fund. A detailed cost analysis is on file.

No adjustment of contract time is warranted since this change does not affect the controlling operation.

CONCURRED BY:

Construction Engineer:	Ben Ghafghazi	Date	9/9/08
Bridge Engineer:	Mehran Ardakanian	Date	09/09/08
Project Engineer:	Brian Maroney, Toll Design Manag	Date	8/18/08
Project Manager:	Ken Terprstra	Date	8/18/08
FHWA Rep.:		Date	
Environmental:		Date	
Other (specify):	Ade Akinsanya, Structures Design	Date	8/5/08
Other (specify):	Clive Endress, Landscape Architec	Date	8/7/08
District Prior Approval By:	Mike Forner, Principal TE	Date	8/18/08
HQ (Issue Approve) By:	Ken Darby	Date	9/2/08
Resident Engineer's Signature:		Date	9/9/08

ESTIMATE OF COST

	THIS REQUEST	TOTAL TO DATE
ITEMS	$0.00	$0.00
FORCE ACCOUNT	$100,000.00	$100,000.00
AGREED PRICE	$659,250.00	$659,250.00
ADJUSTMENT	$0.00	$0.00
TOTAL	$759,250.00	$759,250.00

FEDERAL PARTICIPATION

☐ PARTICIPATING ☐ PARTICIPATING IN PART ☑ NONE
☐ NON-PARTICIPATING (MAINTENANCE) ☐ NON-PARTICIPATING

FEDERAL SEGREGATION (if more than one Funding Source or P.I.P. type)
☑ CCO FUNDED PER CONTRACT ☐ CCO FUNDED AS FOLLOWS

FEDERAL FUNDING SOURCE	PERCENT

ADA Notice: For individuals with sensory disabilities, this document is available in alternate formats. For information call: (916) 654-6410 or TDD (916) 654-3880 or write Records and Forms Management, 1120 N Street, MS-89, Sacramento, CA 95814.

STATE OF CALIFORNIA - DEPARTMENT OF TRANSPORTATION

CONTRACT CHANGE ORDER MEMORANDUM

DATE: 9/11/2008 Page 1 of 1

TO: AMER BATA / BEN GHAFGHAZI	FILE: E.A. 04 - 0120L4
FROM: BEN GHAFGHAZI	CO-RTE-PM ALA-80-1.6/2.7
	FED. NO. NO FED AID
CCO#: 64 SUPPLEMENT#: 1 Category Code: CHSB	CONTINGENCY BALANCE (incl. this change) $13,476,520.20
COST: $20,000.00 INCREASE ☑ DECREASE ☐	HEADQUARTERS APPROVAL REQUIRED? ☑ YES ☐ NO
SUPPLEMENTAL FUNDS PROVIDED: $0.00	IS THIS REQUEST IN ACCORDANCE WITH ENVIRONMENTAL DOCUMENTS? ☑ YES ☐ NO
CCO DESCRIPTION: Re-survey Frame 1 falsework.	**PROJECT DESCRIPTION:** Construct bridge, roadway, building and electrical system.

Original Contract Time:	Time Adj. This Change:	Previously Approved CCO Time Adjustments:	Percentage Time Adjusted: (including this change)	Total # of Unreconciled Deferred Time CCO(s): (including this change)
810 Day(s)	0 Day(s)	0 Day(s)	0 %	6

THIS CHANGE ORDER PROVIDES FOR:

Laying out edge of deck and centerline for Frame 1 of the westbound bridge (34-0006L).

This change is necessary to re-establish survey points and layout previously placed by the Contractor for the centerline and edge of deck of Frame 1 of the westbound bridge. CCO #64 was written to install high density overlay (HDO) plywood over the existing plywood forms for the purpose of obtaining a class 1 surface finish for the undersides of the bridge. The CCO was issued after the formwork and layout for Frame 1 was completed. As a result the HDO was placed over the centerline and edge of deck layout marks. This will be the second time the layout is being performed at Frame 1, therefore, the contractor will be compensated for the work.

This work is not covered by any contract items, therefore, payment for this work will be at Extra Work at Force Account for an estimated cost of $20,000.00, which can be financed from the contingency funds.

This change has been discussed and concurred with Mike Forner, Principal Construction Engineer, Patrick Treacy, Headquarters Construction, and Ken Terpstra, Project Manager. Design and Maintenance concurrence is not needed since this CCO does not make any changes to the bridge. An Issue and Approve was granted by Ken Darby of Headquarters Construction on September 22, 2008

No adjustment of contract time is warranted since this change does not affect the controlling operation.

CONCURRED BY:			
Construction Engineer:	Ben Ghafghazi	Date	9/24/08
Bridge Engineer:	Mehran Ardakanian	Date	9/24/08
Project Engineer:		Date	
Project Manager:	Ken Terprstra	Date	9/19/08
FHWA Rep.:		Date	
Environmental:		Date	
Other (specify):	Mike Forner, Principal TE	Date	9/18/08
Other (specify):	Patrick Treacy, HQ Const. Coord.	Date	9/15/08
District Prior Approval By:		Date	
HQ (Issue Approve) By:	Ken Darby	Date	9/22/08
Resident Engineer's Signature:		Date	9/24/08

ESTIMATE OF COST

	THIS REQUEST	TOTAL TO DATE
ITEMS	$0.00	$0.00
FORCE ACCOUNT	$20,000.00	$120,000.00
AGREED PRICE	$0.00	$659,250.00
ADJUSTMENT	$0.00	$0.00
TOTAL	$20,000.00	$779,250.00

FEDERAL PARTICIPATION

☐ PARTICIPATING ☐ PARTICIPATING IN PART ☑ NONE
☐ NON-PARTICIPATING (MAINTENANCE) ☐ NON-PARTICIPATING

FEDERAL SEGREGATION (if more than one Funding Source or P.I.P. type)
☑ CCO FUNDED PER CONTRACT ☐ CCO FUNDED AS FOLLOWS

FEDERAL FUNDING SOURCE	PERCENT

ADA Notice: For individuals with sensory disabilities, this document is available in alternate formats. For information call: (916) 654-6410 or TDD (916) 654-3880 or write Records and Forms Management, 1120 N Street, MS-89, Sacramento, CA 95814.

STATE OF CALIFORNIA - DEPARTMENT OF TRANSPORTATION

CONTRACT CHANGE ORDER

Change Requested by: Engineer

CCO 64	Suppl. No. 1	Contract No. 04 - 0120L4	Road ALA-80-1.6/2.7	FED. AID LOC.: NO FED AID

To: **M C M CONSTRUCTION INC**

You are directed to make the following changes from the plans and specifications or do the following described work not included in the plans and specifications for this contract. ***NOTE: This change order is not effective until approved by the Engineer.***

Description of work to be done, estimate of quantities and prices to be paid. (Segregate between additional work at contract price, agreed price and force account.) Unless otherwise stated, rates for rental of equipment cover only such time as equipment is actually used and no allowance will be made for idle time. This last percentage shown is the net accumulated increase or decrease from the original quantity in the Engineer's Estimate.

Extra Work at Force Account:

Lay out edge of deck and centerline for Frame 1 of the westbound bridge (34-0006L). This CCO only compensates for layout that must be re-established due to placement of high density overlay (HDO) plywood over previously placed survey marks.

Estimated cost of Extra Work at Force Account $20,000.00

Estimated Cost: Increase ☑ **Decrease** ☐ **$20,000.00**

By reason of this order the time of completion will be adjusted as follows: 0 days

Submitted by		
Signature	Resident Engineer BEN GHAFGHAZI	Date 9/12/08
Approval Recommended by		
Signature	Construction Manager Amer Bata	Date 9/12/08
Engineer Approval by		
Signature	Construction Manager Amer Bata	Date 10/14/08

We the undersigned contractor, have given careful consideration to the change proposed and agree, if this proposal is approved, that we will provide all equipment, furnish the materials, except as may otherwise be noted above, and perform all services necessary for the work above specified, and will accept as full payment therefor the prices shown above.

NOTE: If you, the contractor, do not sign acceptance of this order, your attention is directed to the requirements of the specifications as to proceeding with the ordered work and filing a written protest within the time therein specified.

Contractor Acceptance by		
Signature	(Print name and title) EDMUNDO A. PUCHI, TREASURER	Date 10/1/08

STATE OF CALIFORNIA - DEPARTMENT OF TRANSPORTATION

CONTRACT CHANGE ORDER MEMORANDUM

TO: AMER BATA / BEN GHAFGHAZI

FROM: BEN GHAFGHAZI

FILE: E.A. 04 - 0120L4
CO-RTE-PM ALA-80-1.6/2.7
FED. NO. NO FED AID

CCO#: 64	SUPPLEMENT#: 2	Category Code: CHSB	CONTINGENCY BALANCE (incl. this change) $4,135,294.40

COST: $200,000.00 INCREASE ☑ DECREASE ☐

HEADQUARTERS APPROVAL REQUIRED? ☑ YES ☐ NO

SUPPLEMENTAL FUNDS PROVIDED: $0.00

IS THIS REQUEST IN ACCORDANCE WITH ENVIRONMENTAL DOCUMENTS? ☑ YES ☐ NO

CCO DESCRIPTION:
Additional funds for Class 1 finish.

PROJECT DESCRIPTION:
Construct bridge, roadway, building and electrical system.

Original Contract Time:	Time Adj. This Change:	Previously Approved CCO Time Adjustments:	Percentage Time Adjusted: (including this change)	Total # of Unreconciled Deferred Time CCO(s): (including this change)
810 Day(s)	0 Day(s)	184 Day(s)	23 %	13

THIS CHANGE ORDER PROVIDES FOR:
Additional funds for providing Class 1 surface finish to the sloped soffit section of Bridge 34-0006 L/R superstructure in accordance with Section 51-1.18B, "Class 1 Surface Finish," of the Standard Specifications.

CCO No. 64 was written to provide Class 1 finish to sloped soffit of the bridge, which is not required per Section 51-1.18, "Surface Finishes," of the Standard Specifications. This shall be after obtaining Ordinary Surface Finish as required by Section 51-1.18A, "Ordinary Surface Finish," of the Standard Specifications. The CCO was written at Extra Work at Force Account for $100,000.00. The extent of the work has been greater than anticipated in CCO No. 64, therefore, additional funds are required for this work.

Payment for this work will be Extra Work at Force Account of $200,000.00, which can be financed from the contingency fund.

This change has been discussed and concurred with Amer Bata, acting for Mike Forner, Principal Construction Engineer; Patrick Treacy, Headquarters Construction Coordinator; and Ken Terpstra, Project Manager. Design and Maintenance concurrence is not required since this change is for additional funds only. Issue and Approve was granted by Headquarters on October 21, 2009.

No adjustment of contract time is warranted since this change does not affect the controlling operation.

CONCURRED BY:

Construction Engineer:	Ben Ghafghazi	Date 10/23/09
Bridge Engineer:	Mehran Ardakanian	Date
Project Engineer:		Date
Project Manager:	Ken Terprstra	Date 10/20/09
FHWA Rep.:		Date
Environmental:		Date
Other (specify):	Patrick Treacy, HQ Const. Coord.	Date 10/19/09
Other (specify):		Date
District Prior Approval By:	A. Bata for M. Forner, Prin. TE	Date 10/19/09
HQ (Issue Approve) By:	Bob Molera	Date 10/21/09
Resident Engineer's Signature:		Date 10/23/09

ESTIMATE OF COST

	THIS REQUEST	TOTAL TO DATE
ITEMS	$0.00	$0.00
FORCE ACCOUNT	$200,000.00	$320,000.00
AGREED PRICE	$0.00	$659,250.00
ADJUSTMENT	$0.00	$0.00
TOTAL	$200,000.00	$979,250.00

FEDERAL PARTICIPATION

☐ PARTICIPATING ☐ PARTICIPATING IN PART ☑ NONE
☐ NON-PARTICIPATING (MAINTENANCE) ☐ NON-PARTICIPATING

FEDERAL SEGREGATION (if more than one Funding Source or P.I.P. type)
☑ CCO FUNDED PER CONTRACT ☐ CCO FUNDED AS FOLLOWS

FEDERAL FUNDING SOURCE	PERCENT

ADA Notice: For individuals with sensory disabilities, this document is available in alternate formats. For information call: (916) 654-6410 or TDD (916) 654-3880 or write Records and Forms Management, 1120 N Street, MS-89, Sacramento, CA 95814.

STATE OF CALIFORNIA - DEPARTMENT OF TRANSPORTATION

CONTRACT CHANGE ORDER

Change Requested by: Engineer

CCO 64	Suppl. No. 2	Contract No. 04 - 0120L4	Road ALA-80-1.6/2.7	FED. AID LOC.: NO FED AID

To: **M C M CONSTRUCTION INC**

You are directed to make the following changes from the plans and specifications or do the following described work not included in the plans and specifications for this contract. ***NOTE: This change order is not effective until approved by the Engineer.***

Description of work to be done, estimate of quantities and prices to be paid. (Segregate between additional work at contract price, agreed price and force account.) Unless otherwise stated, rates for rental of equipment cover only such time as equipment is actually used and no allowance will be made for idle time. This last percentage shown is the net accumulated increase or decrease from the original quantity in the Engineer's Estimate.

Extra Work at Force Account:

Additional funds for providing Class 1 surface finish in accordance with Section 51-1.18B, "Class 1 Surface Finish," of the Standard Specifications for the undersurfaces of box girders bridge. This work shall be performed by light sand blasting as determined by the Engineer, after the Ordinary Surface Finish as required by Section 51-1.18A, "Ordinary Surface Finish," of the Standard Specifications is obtained.

Estimated cost of Extra Work at Force Account $200,000.00

Estimated Cost: **Increase** ☑ **Decrease** ☐ **$200,000.00**

By reason of this order the time of completion will be adjusted as follows: 0 days

Signature	**Resident Engineer** BEN GHAFGHAZI	**Date** 10/14/09
Signature	**Construction Manager** Amer Bata	**Date** 10/19/09
Signature	**Construction Manager** Amer Bata	**Date** 10/23/09

We the undersigned contractor, have given careful consideration to the change proposed and agree, if this proposal is approved, that we will provide all equipment, furnish the materials, except as may otherwise be noted above, and perform all services necessary for the work above specified, and will accept as full payment therefor the prices shown above.

NOTE: If you, the contractor, do not sign acceptance of this order, your attention is directed to the requirements of the specifications as to proceeding with the ordered work and filing a written protest within the time therein specified.

Signature N/A	**(Print name and title)**	**Date**

STATE OF CALIFORNIA - DEPARTMENT OF TRANSPORTATION

CONTRACT CHANGE ORDER MEMORANDUM

TO: AMER BATA / BEN GHAFGHAZI	FILE: E.A. 04 - 0120L4
	CO-RTE-PM ALA-80-1.6/2.7
FROM: BEN GHAFGHAZI	FED. NO. NO FED AID
CCO#: 64 SUPPLEMENT#: 3 Category Code: CHSB	CONTINGENCY BALANCE (incl. this change): $1,095,847.90
COST: $20,000.00 INCREASE ☑ DECREASE ☐	HEADQUARTERS APPROVAL REQUIRED? ☑ YES ☐ NO
SUPPLEMENTAL FUNDS PROVIDED: $0.00	IS THIS REQUEST IN ACCORDANCE WITH ENVIRONMENTAL DOCUMENTS? ☑ YES ☐ NO
CCO DESCRIPTION: Additional funds for Class 1 finish.	**PROJECT DESCRIPTION:** Construct bridge, roadway, building and electrical system.

Original Contract Time:	Time Adj. This Change:	Previously Approved CCO Time Adjustments:	Percentage Time Adjusted: (including this change)	Total # of Unreconciled Deferred Time CCO(s): (including this change)
810 Day(s)	0 Day(s)	184 Day(s)	23 %	13

THIS CHANGE ORDER PROVIDES FOR:

Additional funding for providing light sand blasting necessary to provide a Class 1 surface finish for the under surface of the box girder bridges.

The original Change Order No. 64 along with Supplements No. 1 and No. 2 provided force account funding for the contractor to perform light sand blasting that was necessary to provide a Class 1 finish to the westbound and eastbound structures being constructed under this contract. These 2 concrete box girder bridges provide the touchdown at the Oakland end of the new San Francisco Oakland Bay Bridge east span. The Class 1 finish was necessary in order to match the finish of the adjacent Skyway structure of the new span as requested by Landscape Architecture.

The cost of the work has exceeded the previous estimate and it is now anticipated that additional funding of $20,000.00 will be required to fund the work. The sand blasting required to provide the finish was more extensive than anticipated.

The work shall be compensated as extra work at force account at an estimated cost of $20,000.00 which shall be financed from the contract contingency funds. A cost analysis is on file. An Issue and Approved was granted by Larry Salhaney of Headquarters Construction on January 3, 2011.

No adjustment of contract time is warranted as the change will not affect the controlling operation.

Maintenance concurrence is not required as this change doesn't affect any permanent roadway features.

CONCURRED BY:

Construction Engineer:	Ben Ghafghazi	Date	1/3/2011
Bridge Engineer:	Mehran Ardakanian	Date	9/9/08
Project Engineer:	Brian Maroney, Toll Design Manage	Date	8/18/08
Project Manager:	Ken Terprstra	Date	8/18/08
FHWA Rep.:		Date	
Environmental:		Date	
Other (specify):	Patrick Treacy, HQ Const. Coord.	Date	
Other (specify):		Date	
District Prior Approval By:		Date	
HQ (Issue Approve) By:	Larry Salhaney	Date	1/3/11
Resident Engineer's Signature:		Date	1/3/2011

ESTIMATE OF COST

	THIS REQUEST	TOTAL TO DATE
ITEMS	$0.00	$0.00
FORCE ACCOUNT	$20,000.00	$340,000.00
AGREED PRICE	$0.00	$659,250.00
ADJUSTMENT	$0.00	$0.00
TOTAL	$20,000.00	$999,250.00

FEDERAL PARTICIPATION

☐ PARTICIPATING ☐ PARTICIPATING IN PART ☑ NONE
☐ NON-PARTICIPATING (MAINTENANCE) ☐ NON-PARTICIPATING

FEDERAL SEGREGATION (if more than one Funding Source or P.I.P. type)
☐ CCO FUNDED PER CONTRACT ☐ CCO FUNDED AS FOLLOWS

FEDERAL FUNDING SOURCE	PERCENT

ADA Notice: For individuals with sensory disabilities, this document is available in alternate formats. For information call: (916) 654-6410 or TDD (916) 654-3880 or write Records and Forms Management, 1120 N Street, MS-89, Sacramento, CA 95814.

STATE OF CALIFORNIA - DEPARTMENT OF TRANSPORTATION

CONTRACT CHANGE ORDER

Change Requested by: Engineer

CCO: 64	Suppl. No. 3	Contract No. 04 - 0120L4	Road ALA-80-1.6/2.7	FED. AID LOC.: NO FED AID

To: **M C M CONSTRUCTION INC**

You are directed to make the following changes from the plans and specifications or do the following described work not included in the plans and specifications for this contract. ***NOTE: This change order is not effective until approved by the Engineer.***

Description of work to be done, estimate of quantities and prices to be paid. (Segregate between additional work at contract price, agreed price and force account.) Unless otherwise stated, rates for rental of equipment cover only such time as equipment is actually used and no allowance will be made for idle time. This last percentage shown is the net accumulated increase or decrease from the original quantity in the Engineer's Estimate.

Extra Work at Force Account:

Provide additional funds for the work specified under the original Change Order No. 64 including Supplements No. 1 and No. 2.

Estimated cost of Extra Work at Force Account $20,000.00

Estimated Cost: Increase ☑ Decrease ☐ **$20,000.00**

By reason of this order the time of completion will be adjusted as follows: 0 days

Submitted by

Signature	Resident Engineer BEN GHAFGHAZI	Date 12/28/2010

Approval Recommended by

Signature	Construction Manager Hazem El-Mahmoud For Amer Bata	Date 12/29/10

Engineer Approval by

Signature	Construction Manager Amer Bata	Date 1/4/11

We the undersigned contractor, have given careful consideration to the change proposed and agree, if this proposal is approved, that we will provide all equipn furnish the materials, except as may otherwise be noted above, and perform all services necessary for the work above specified, and will accept as full paymer therefor the prices shown above.

NOTE: If you, the contractor, do not sign acceptence of this order, your attention is directed to the requirements of the specifications as to proceeding with the ordered work and filing a written protest within the time therein specified.

Contractor Acceptance by

Signature	(Print name and title)	Date

CONTRACT CHANGE ORDER

Change Requested by: Engineer

CCO 65 | **Suppl. No.** 0 | **Contract No.** 04 - 0120L4 | **Road** ALA-80-1.6/2.7 | **FED. AID LOC.:** NO FED AID

To: **M C M CONSTRUCTION INC**

You are directed to make the following changes from the plans and specifications or do the following described work not included in the plans and specifications for this contract. ***NOTE: This change order is not effective until approved by the Engineer.***

Description of work to be done, estimate of quantities and prices to be paid. (Segregate between additional work at contract price, agreed price and force account.) Unless otherwise stated, rates for rental of equipment cover only such time as equipment is actually used and no allowance will be made for idle time. This last percentage shown is the net accumulated increase or decrease from the original quantity in the Engineer's Estimate.

Extra Work at Lump Sum:

Provide labor, equipment, and materials to revise service platform electrical work per sheets 2 of 40 through 40 of 40 of this CCO as follows:

1) Revise Section 10-3.23, "Mole Substation Electrical," of the Special Provisions to include service platforms and address changes in enclosures.

2) Revise layout of electrical panel enclosures on service platforms 22W, 23W and 22E.

3) Revise Utility Panels UP-171, UP-172, UP-271, and Lightning Panel, LP-281 from a single enclosure to three separate enclosures. Revise size of SCADA panel enclosure.

4) Change panel enclosures from fiberglass to stainless steel.

5) Revise panel racks and associated conduit and cables.

For this work the contractor will be paid the sum of $267,963.00. This sum constitutes full compensation, including markups, for this change. All work shall be in accordance with Section 10-3, "Signals, Lighting and Electrical Systems," of the Special Provisions and Section 86, "Signals, Lighting and Electrical Systems," of the Standard Specifications.

Extra Work at Agreed Lump Sum $267,963.00

Consideration of a time adjustment will be deferred until completion of the work specified herein. Determination of a commensurate time extension will be made in accordance with Section 10-1.14, "Progress Schedule (Critical Path Method)," of the Special Provisions and Section 8-1.07, "Liquidated Damages," of the Standard Specifications.

Estimated Cost: **Increase** ☑ **Decrease** ☐ **$267,963.00**

By reason of this order the time of completion will be adjusted as follows: Deferred

Submitted by

Signature	**Resident Engineer** BEN GHAFGHAZI	**Date** 9/2/09

Recommended for Approval by

Signature	**Construction Manager** Amer Bata	**Date** 9/2/09

Engineer Approval by

Signature	**Construction Manager** Amer Bata	**Date** 9/26/09

We the undersigned contractor, have given careful consideration to the change proposed and agree, if this proposal is approved, that we will provide all equipment, furnish the materials, except as may otherwise be noted above, and perform all services necessary for the work above specified, and will accept as full payment therefor the prices shown above.

NOTE: If you, the contractor, do not sign acceptance of this order, your attention is directed to the requirements of the specifications as to proceeding with the ordered work and filing a written protest within the time therein specified.

Contractor Acceptance by

Signature	**(Print name and title)** EDMUNDO A. PUCHI, TREASURER	**Date** 9/17/09

State of California
DEPARTMENT OF TRANSPORTATION

Business, Transportation and Housing Agency

Memorandum

Flex your power!
Be energy efficient!

To: BILL HOWE
Senior Resident Engineer
Oakland Touchdown Contract 1

Date: April 13, 2009
File: 04-ALA-80
1.6/2.7
04-0120L4

From: JAIME E. GUTIERREZ
District Branch Chief
Office of Toll Bridge Design

Subject: Contract Change Order Request: Revise CCO 65 - Service Platform Electrical

Because of accessibility and clearance, it is requested that the transformer mounting location be relocated. It is also requested that the overall transformer size be changed.

PLANS
The following plan sheets have been revised:
391R2, 392R2, 393R2, 424R2, 425R2, 583R2 and 583AR1.

SPECIFICATIONS
- No changes

ESTIMATE
($1523) Credit

REFERENCES:
- Conduit and Cable Tray Schedule
- Circuit Schedule
- Estimate Breakdown
- Encapsulated Transformer Article
- NEC Code 450.13a Article

Caltrans Electrical Design, Parviz Boozarpour, has reviewed and concurs with this CCO request.

If you have any questions or need additional information please call me at (510) 622-1726.

Attachments

CC: BGolemohammadi
PBoozarpour
BGhafghazi
CCO File

State of California
DEPARTMENT OF TRANSPORTATION

Business, Transportation and Housing Agency

Memorandum

Flex your power!
Be energy efficient!

To: AMER BATA
Supervising Bridge Engineer
Oakland Touchdown Contract 1

Date: July 9, 2008
File: 04-ALA-80
1.6/2.7
04-0120L4

Attention: BILL HOWE
Resident Engineer

From: JAIME E. GUTIERREZ
District Branch Chief
Office of Toll Bridge Design

Subject: Contract Change Order Request – Service Platform Electrical

This CCO addresses revisions to panel racks for wall mounted electrical equipment, changes of mini power center to individual components, changes to panel enclosure sizes of SCADA, telephone terminal boxes and PB-2B pull box.

PLANS

The following plan sheets have been revised or added:

391R1, 392R1, 393R1, 415R1, 416R1, 417R1, 424R1, 425R1, 448R1, 449R1, 450R1, 501R1, 503R1, 535R1, 580R1, 581R1, 581AR0, 583R1 and 583AR0.

See attached plan list for description of changes.

SPECIFICATIONS

Attached are revisions to Section 10-3.23 of Special Provisions. Changes are highlighted in red and blue. The changes addresses the following two items:

- Clarification that the scope of Section 10-3.23 includes the service platforms as well as the Mole Substation electrical
- Revisions due to change from mini-power center to separate components on service platforms.

ESTIMATE

The estimate for this CCO is $53,000

Attached with this CCO request are associated references for contractor's use:

- Conduit and Cable Tray Schedule
- Circuit Schedule Routing

Caltrans Electrical Design, Parviz Boozarpour, has reviewed and concurs with this CCO request.

If you have any questions or need additional information please contact Jaime Gutierrez at (510) 622-1663 or myself at (510) 286-5085.

Attachments

cc: SHulsebus
BGolemohammadi
PBoozarpour
BGhafghazi
BHowe

CCO File

CONTRACT CHANGE ORDER

Change Requested by: Engineer

CCO 65 | **Suppl. No.** 0 | **Contract No.** 04 - 0120L4 | **Road** ALA-80-1.6/2.7 | **FED. AID LOC.:** NO FED AID

To: **M C M CONSTRUCTION INC**

You are directed to make the following changes from the plans and specifications or do the following described work not included in the plans and specifications for this contract. ***NOTE: This change order is not effective until approved by the Engineer.***

Description of work to be done, estimate of quantities and prices to be paid. (Segregate between additional work at contract price, agreed price and force account.) Unless otherwise stated, rates for rental of equipment cover only such time as equipment is actually used and no allowance will be made for idle time. This last percentage shown is the net accumulated increase or decrease from the original quantity in the Engineer's Estimate.

Extra Work at Lump Sum:

Provide labor, equipment, and materials to revise service platform electrical work per sheets 2 of 40 through 40 of 40 of this CCO as follows:

1) Revise Section 10-3.23, "Mole Substation Electrical," of the Special Provisions to include service platforms and address changes in enclosures.

2) Revise layout of electrical panel enclosures on service platforms 22W, 23W and 22E.

3) Revise Utility Panels UP-171, UP-172, UP-271, and Lightning Panel, LP-281 from a single enclosure to three separate enclosures. Revise size of SCADA panel enclosure.

4) Change panel enclosures from fiberglass to stainless steel.

5) Revise panel racks and associated conduit and cables.

For this work the contractor will be paid the sum of $267,963.00. This sum constitutes full compensation, including markups, for this change. All work shall be in accordance with Section 10-3, "Signals, Lighting and Electrical Systems," of the Special Provisions and Section 86, "Signals, Lighting and Electrical Systems," of the Standard Specifications.

Extra Work at Agreed Lump Sum $267,963.00

Consideration of a time adjustment will be deferred until completion of the work specified herein. Determination of a commensurate time extension will be made in accordance with Section 10-1.14, "Progress Schedule (Critical Path Method)," of the Special Provisions and Section 8-1.07, "Liquidated Damages," of the Standard Specifications.

Estimated Cost: **Increase** ☑ **Decrease** ☐ **$267,963.00**

By reason of this order the time of completion will be adjusted as follows: Deferred

Submitted by

Signature	**Resident Engineer** BEN GHAFGHAZI	**Date** 9/2/09

Recommended for Approval by

Signature	**Construction Manager** Amer Bata	**Date** 9/2/09

Engineer Approval by

Signature	**Construction Manager** Amer Bata	**Date** 9/26/09

We the undersigned contractor, have given careful consideration to the change proposed and agree, if this proposal is approved, that we will provide all equipment, furnish the materials, except as may otherwise be noted above, and perform all services necessary for the work above specified, and will accept as full payment therefor the prices shown above.

NOTE: If you, the contractor, do not sign acceptance of this order, your attention is directed to the requirements of the specifications as to proceeding with the ordered work and filing a written protest within the time therein specified.

Contractor Acceptance by

Signature	**(Print name and title)** EDMUNDO A. PUCHI, TREASURER	**Date** 9/17/09

10-3.23 MOLE SUBSTATION AND SERVICE PLATFORM ELECTRICAL

UNIT SUBSTATION

The Contractor shall install one 12.47 kV/480 V unit substation consisting of medium voltage switchgear, step down transformer, low voltage switchgear and related equipment in the quantity as shown on the plans, completely assembled, equipped, wired, and factory tested. The Contractor shall provide materials, field installation, field start-up assistance, field testing, training, plans, data, descriptive information in detail, operations and maintenance manuals as required elsewhere in these special provisions. The equipment specified herein will be installed indoors at the Mole substation. CBC design data for this facility is seismic Zone 4.

The Contractor's attention is directed to "Order of Work" of these special provisions for the timely identification of the supplier of the unit substation and products to be used by the Contractor.

The equipment shall be designed, fabricated, assembled and tested in accordance with applicable codes and standards of the following organizations:

A. ANSI - American National Standards Institute
B. ASTM - American Society for Testing Materials
C. IEEE - Institute of Electrical and Electronic Engineers
D. ISA - Instrument Society of America
E. NEC - National Electrical Code
F. NEMA - National Electrical Manufacturers Association
G. NFPA - National Fire Protection Association
H. OSHA - Occupational Safety and Health Administration
I. L - Underwriters Laboratories

If there is a conflict between the above referenced standards, the more stringent standard shall be used. The equipment shall consist of individual vertical sections housing medium voltage circuit breaker units, draw out fuses and potential transformers, control switches, relays, wiring, interlocks and accessories assembled to form a rigid, self-supporting, completely metal enclosed structure. The equipment shall also include 12.47 kV/480 V step down transformer equipment and consist of individual vertical section housing the base structure, cores, coils, insulation, control cabinet and accessories. The low voltage switchgear section shall consist of vertical sections, circuit breakers, current transformers, potential transformers, control switches, wiring, interlocks and accessories. A breaker transport dolly shall be furnished for substation.

Qualifications

For the primary and secondary equipment specified herein, the manufacturer shall be ISO 9000, 9001 or 9002 certified. The manufacturer of this equipment shall have produced similar electrical equipment. When requested by the Engineer, an acceptable list of installations with similar equipment shall be provided.

The finish of the switchgear shall consist of a coat of thick exterior finish spray of air drying and high-gloss gray enamel and a coat of ANSI-61, cathodic epoxy paint applied by electro-deposition process to the pre-cleaned and phosphatized steel surfaces.

The Contractor shall provide labor and equipment for unloading and installing unit substation, foundations, anchor bolts, connections to all external power and control wiring, field testing and energizing.

Inspection and Testing

Equipment furnished shall be subject to expediting and shop inspection. Units shall be completely assembled, within shipping limitations, all dimensions shall be verified, and circuits shall be checked and tested prior to shipping.

The Engineer will have the option to inspect fabrication and witness the testing of the equipment. The Contractor shall notify the Engineer a minimum of three weeks in advance of the date of scheduled tests. The manufacturer shall include the cost of transportation and lodging for up to three Department's representatives. The cost of meals and incidental expenses shall be the Department's responsibility. An authorized representative of the Engineer shall have free entry during fabrication and testing of the equipment.

SUBMITTALS

Each submittal package shall consist of six copies. Submittals shall be delivered to the Engineer at least 1[illegible] to the start of the installation. The Engineer will be allowed 90 days for review of the submittals.

A. Submittals (For Review and Approval)

The following information shall be submitted to the Engineer:

REGISTERED PROFESSIONAL ENGINEER
FADI WALIEDDINE
07-JUL-08
No. 11465
Exp. 12/31/09
ELECTRICAL
STATE OF CALIFORNIA

1. Master drawing index
2. Front view elevation
3. Floor plan
4. Top view
5. Single line and Three line diagrams
6. Schematic diagram
7. Nameplate schedule
8. Component list
9. Conduit entry and exit locations
10. Assembly ratings including:

    a. Short-circuit rating
    b. Voltage
    c. Continuous current
    d. Basic impulse level for equipment over 600 volts
    e. kVA rating

11. Major component ratings including:

    a. Voltage
    b. Continuous current
    c. Interrupting ratings

12. Cable terminal sizes
13. Transformer impedance.

Key interlock schematic plans and sequence of operations shall be submitted to the Engineer:

B. Submittals (For Information)

When requested by the Engineer the following product information shall be submitted:

1. Descriptive bulletins
2. Product data sheets.

C. Submittals (For Final Acceptance)

The following information shall be submitted for record purposes prior to final payment:

1. Final as-built plans and information for secondary unit substation
2. Wiring diagrams
3. Certified production test reports
4. Installation information
5. Seismic certification and equipment anchorage details.

D. Operation and Maintenance Manuals

The equipment operation and maintenance manuals shall be provided prior to shipment of the equipment. Operation and maintenance manuals shall include the following information:

1. Instruction books or leaflets
2. Recommended renewal parts list

UNIT SUBSTATION COMPONENTS

A. Unit Substation Medium Voltage Switchgear

The metal-clad switchgear is a part of the secondary unit substation and shall meet the applicable parts of that specification in these special provisions.

1. Switchgear Enclosure

The metal-clad switchgear shall be dead-front, free-standing, rigid, bolted steel frames, completely enclosed by metal sheets. Each unit, or auxiliary unit, shall have adequate facilities for removal of gases. A one piece unit steel shutter shall automatically close the opening to the insulators for the primary disconnecting devices when the circuit breaker unit is in the disconnected position or out of the cell. The switchgear assembly shall be so constructed that it is easily extendible and so all components are easily accessible for installation and maintenance. All indicating instruments, protective relays, push buttons, indicating lights and control switches shall be mounted on the front side of cubicles. Main incoming line and feeder cables shall be bottom feed. Power cable compartments shall be large enough to accommodate cable terminations and shall include cable supports and connectors.

2. Busses

The main bus shall be insulated by flame retardant epoxy that withstands dielectric tests specified in ANSI-C37.20. The bus supports shall be flame-retardant track resistant glass polyester, which have strength suitable to withstand the forces caused by a peak short circuit asymmetrical current. Three-phase, insulated copper bus bars shall be provided with the same continuous current ratings as the main power circuit breaker. All joints shall be electrolytically silver-plated. Bus insulation shall be slip on flame retardant and tracking resistant Noryl bus sleeves. Splice, "L" bow, and boots shall be insulated with vinyl insulation. Spare boots are to be included. Power bus, connections and supports shall be of standard design and suitably spaced for the continuous current and short circuit current capacities of the main circuit breaker. Interconnecting bus segments with suitable material for insulating bus joints, including structure-connecting hardware shall be provided with each shipping section. The standard phasing within equipment housings for power circuits shall be A, B, and C from left to right, top to bottom, and front to back when facing front of the equipment.

Continuous copper grounding bus bars shall run through the assembled switchgear with all non-current-carrying metal parts effectively connected to it the grounding bus bars. The ground bus bar shall be not less than 50 mm x 6 mm in size. Connections shall be made by bolted type fittings. Mechanical lugs for conductor sizes from No. 2/0 AWG to 250 kcmil stranded bare copper wire, bolted to ground bus, shall be provided in each incoming supply cubicle and in each feeder cubicle for connection of ground wire to ground bus bar. Copper bus bar splices between shipping sections shall be provided within bolted connections having silver-plated contact surfaces and means for adequate clamping.

3. Medium Voltage Circuit Breakers

The circuit breakers shall be vacuum-break type, draw out construction, three-pole, single-throw. Minimum breaker ratings shall conform to the ratings as shown on single-line diagrams.

Each breaker shall be suitable for "local" electrical control in both operating and test positions. Provision shall also be made for "remote" electrical control. Circuit breakers shall have stored-energy closing mechanism of the motor-charged spring-wound type, which are normally electrically charged and released to close the breakers. With the breaker in closed or tripped position it shall be possible to recharge the stored-energy mechanism by hand.

An emergency mechanism trip lever shall be supplied to trip the breaker manually in the event of loss of tripping voltage. Local manual operation shall be possible from the front of the breaker by direct mechanical linkages, without use of auxiliary voltage or other auxiliary medium. The closing mechanism shall be "trip-free." The closed and open position of each breaker shall be clearly indicated by a mechanical position indicator visible from the front of the cubicles. Colors shall be RED for CLOSED and GREEN for OPEN positions of the circuit breaker. Position and connection to all main and auxiliary contacts and plugs shall be identical in each circuit breaker so that circuit breakers of equal rating shall be interchangeable. A minimum of 2 NO/2 NC breaker and 4 NO/4 NC mechanism operated control (MOC) spare electrically separate auxiliary contacts, with draw out finger connections to stationary mounted terminals, shall be furnished for each breaker in addition to those required for internal control. Breakers shall be adjustable for either normally-open (NO) or normally-closed (NC) contacts and shall be operated by the breaker in both operating and test positions. Breakers shall be truck-mounted and withdraw in the horizontal direction. Any attempt to withdraw a breaker in a closed position shall cause it to trip automatically. When the breaker is withdrawn, shutters shall automatically close off all access to live fixed contacts. There shall be a "test" position for each breaker in which, while still in the compartment with the door closed and with the power contacts disconnected, all its auxiliary wiring remains in an operating condition, permitting tests of all control functions associated with the circuit breaker. There shall be provision for padlocking the circuit breaker in the test position to prevent plug-in of the breaker. The electrical and mechanical operating mechanism shall be designed so that it is impossible to close or trip the circuit breakers unless it is in either the racked-in (operating) or the test positions.

Each circuit breaker shall contain three vacuum interrupters separately mounted as a self-contained, self-aligning pole unit which can be removed easily. The vacuum interrupter pole units shall be mounted on glass polyester supports. An integral contact wear gap indicator for each vacuum interrupter shall be easily visible. The breaker front panel shall be removable when the breaker is withdrawn for inspection and maintenance.

The switchgear shall consist of a line-up of standard factory-assembled, metal-clad draw out power circuit breaker cubicles. The switchgear assemblies, including circuit breakers and components, shall be designed and fabricated to withstand, without distortion and damage, all stresses incidental to shipping, installation and operation, including system short-circuits and earthquakes.

4. 15 kV Circuit Breaker Ratings

The 15 kV circuit breakers shall meet or exceed the following ratings:

Continuous Current, A	1200
Nominal Voltage Class, kV	15
Nominal 3-Phase MVA Class, MVA	500
Rated Maximum Voltage, kV rms.	15
Rated Voltage Range Factor, K	1.30
Low Frequency Withstand Voltage, kV rms.	36
Basic Impulse Level, kV rms. Crest (based on a 1.2 x 50 microsecond wave)	95
Rated Short Circuit Current, kA rms. symmetrical (at rated maximum voltage)	18
Maximum Interrupting Capability, kA rms. symmetrical	23
Closing and Latching Capability, kA rms. symmetrical	37
Interrupting Time, Cycles (Max.)	5

5. Current Transformers

The current transformers shall have ratios as shown on the plans and shall be furnished with shorting terminal blocks on their secondaries. The thermal and mechanical ratings of the current transformers shall be coordinated with the circuit breakers. Their ANSI metering accuracy class shall be 0.3, B0.1 through B1.8 and their ANSI relaying accuracy class shall be T200. The line to line voltage shall not exceed the transformer insulation class voltage.

Current transformers shall be designed for the proper voltage operations as required and shall conform to requirements of ANSI Standard C57.13. Current transformers shall be dry or compound-insulated type, with a suitable means for mounting and for grounding the frame. Current transformer ratios, unless otherwise specified, shall be as indicated on the Single Line Diagram drawings and shall be multi-ratio.

6. Potential Transformers

The potential transformers shall be indoor, dry or compound-filled type with minimum insulation class and full-wave basic impulse level as specified elsewhere in these special provisions. The potential transformers shall have high and low voltage fuses and shall be trunnion-mounted in separate compartments. Shutters shall isolate primary bus stabs when drawers are withdrawn. High voltage fuses shall be current-limiting type. Accuracy shall be ANSI metering accuracy (60 Hz) of 0.3 W, X, M, Y, Z and 0.6 ZZ burdens at 120 VAC. The thermal rating for a 55°C rise shall not be less than 400 VA for potential transformers. The line-to-line voltage shall not exceed the transformer insulation class voltage.

7. Protective Relays

The switchgear manufacturer shall furnish and install, in the metal-clad switchgear, the quantity, type and rating of protection relays as shown on the plans and described hereafter in this special provision.

8. Microprocessor Three-Phase Protective Relay

Relays for phase time over-current, instantaneous over-current and ground fault protection, ANSI 50/51, 50/51G, or 50/51N, shall be incorporated into a single device. The relay shall be solid-state microprocessor-based multi-functional type that operates from the 5-ampere secondary output of the current transformers. The relay shall provide ANSI 50/51 protective functions for each of the three (3) phases, and ANSI 50/51G or 50/51N ground fault protection functions. The relay shall be true RMS sensing of each phase and ground. Ground element shall be capable of being utilized in residual, zero sequence, or ground source connection schemes, or deactivated.

The primary current transformer rating being used for phase and ground protection feeding the device shall be programmable for current transformers with primary current ratings from 5 through 1,200 amperes. Both the phase and ground protection curves shall be independently field selectable and programmable with or without load. The relay shall have a built-in alphanumeric display capable of displaying the following information:

a. Individual phase currents

b. Ground current
c. Cause of trip
d. Magnitude and phase of current causing trip
e. Peak current demand for each phase and ground since last reset
f. Current transformer primary rating
g. Programmed phase and ground set points.

Relay shall have the following features:

a. Integral manual testing capability for both phase and ground
b. Continuous self-testing of internal circuitry
c. Programmable set-points for device curve selection
d. Programmable inputs, such as current transformer ratios

Relays shall have provisions for future communication capability via local area network compatible to with MODBUS protocol. Relays shall be capable of transmitting all information contained in the relay such as currents, set-points, cause of trip, magnitude of trip current, and open-close trip status via the communication network. The relay shall have the ability to close and open the associated breaker with proper access code from remote location over the communication network when the relay is configured in remote close/open mode.

Relay alarm or trip contacts shall not change state if power is lost or an under-voltage occurs. These contacts shall only cause a trip upon detection of an over-current or fault condition based upon programmed settings.

9. Undervoltage Relays (Device 27)

The time undervoltage relays shall monitor three phase ac voltages and shall not require additional supply voltage. The relay shall conform to the requirements in IEEE/ANSI C37.90a and IEC 255 and 255-5 as specified for surge withstand, fast transient, and radio interference standards. The relay shall have the following features:

a. Solid state design, draw out construction, testable in its case, pass IEEE C37.90 for surge withstand ratings as defined for "Utility Grade".
b. Shall not require computerized software for setup and settings shall be via front panel controls.
c. 27 inputs that have adjustable trips set over the range from 55 V(ac) to 160 V(ac).
d. Time delay shall be adjustable over a settable range from 0 to 9.9 second(s), in .1 s increments or less.
e. Front panel setting and have internal switches and potentiometers.
f. LED's to indicate when the acceptable voltage conditions and settings have occurred.
g. UL listed, Standard 508.

10. Directional Overcurrent Relay (Device 67)

The directional overcurrent relays shall monitor all three phases and shall consist of three units. The directional units shall have both instantaneous and time overcurrent units. The relay shall conform to the following:

a. Solid state design, draw out construction, testable in its case, pass IEEE C37.90 for surge withstand ratings as defined for "Utility Grade".
b. Shall not require computerized software for setup and settings shall be via front panel controls.
c. The relay shall be designed for three current inputs and for three wire line–line voltage inputs
d. Nominal potential input shall be 208 V line to line.
e. Current input shall be rated at 5 A nominal.
f. Time delay shall be adjustable over a settable range from 0 to 99 second(s), in .01 s increments or less.
g. Front panel setting and have internal switches and potentiometers.
h. LED's to indicate when the acceptable voltage conditions and settings have occurred.

i. Requirements in IEEE/ANSI C37.90.90.1 and IEC 255 and 255 and 255-5 as specified for surge withstand, fast transient, and radio interference standards. The relay shall be UL listed, Standard 508.

11. Lockout Relay (Device 86)

Lockout relay shall be 125 VDC solenoid operated, manual reset type. Contact development as shown on the plan.

12. Control Power

Control power, at 125 V(DC) supplied from station batteries, shall be used to power the protective relays, auxiliary relays and control (to close and trip) the circuit breakers. The 125 V(DC) supply shall be distributed to each cubicle through dead front pull-out fuse blocks. Fuses shall independently protect breaker tripping and closing circuits for each of the cubicles. An alarm relay shall also be included in each tripping circuit to initiate remote alarm upon loss of DC tripping power. The total 125 V(DC) power requirements for each switchgear, plus close and trip currents for each breaker shall be furnished to the Engineer for review and approval.

13. Control Accessories

Red and green indicating lights shall be provided on the front door of each cubicle-red light to indicate breaker closed and green light to indicate breaker open. White and blue indicating lights shall also be provided on the front doors of each cubicle, white light to indicate circuit breaker control in local and blue light to indicate circuit breaker control in the remote. Indicating lights shall be LED type with "push to test" feature. Control switches shall be heavy duty, rotary and lockout type, rated 600 V, 20 A. Handle styles shall be pistol grip for control, round notches for instruments. Switches shall be provided with engraved escutcheons.

14. Power Monitoring

The switchgear manufacturer shall provide the power monitoring instrumentation as described in these special provisions and the appropriate voltage and current transformers required to provide sensing signals for the monitoring system. The switchgear manufacturer shall install the monitoring instruments, and wire all electrical circuits to the instrumentation package including wiring to a dedicated terminal strip for the relay outputs, digital status inputs and analog output ports. The switchgear manufacturer shall provide shorting switches or test blocks for all meter current transformer inputs. The power monitoring device shall have extensive metering, power quality analysis, remote input monitoring, control relaying, analog input/outputs and communications capability.

15. Space Heaters

Space heaters shall be provided with the unit substation to prevent moisture condensation on the inside of each compartment. The space heaters shall be sized to the latest standards and controlled by a thermostat. A terminal block shall be provided adjacent to the thermostat for power source connection. The heaters shall be protected by perforated metal guards to prevent inadvertent contact with the heater elements.

16. Wiring and Terminals

Secondary wiring in the individual switchgear units and interconnecting wires between various units shall be provided and shall consist of 600 V insulated wire. No. 14 AWG stranded copper for auxiliary wiring and No. 10 AWG stranded copper for current transformer circuits. The insulated wires shall be Type MTW, or SIS as listed in the National Electrical Code. All wiring shall be brought to terminal strips with clamp type, molded plastic terminals, preferably ~~of~~ rail-mounted. One additional 8 terminal strip shall be supplied in each unit, for the connection of external auxiliary circuits. Terminal strips shall be preferably mounted vertically. Closed-end, crimp-type terminal lugs shall be used for all wiring connections to instruments, relays and other devices which are not provided with a clamp-type terminal. Instrument transformer secondary circuits shall be grounded at the switchgear. All leads from each individual instrument transformer shall be brought out to terminal blocks. Short circuiting type terminal blocks shall be furnished for all current transformer secondary leads and shall have provision for shorting together all leads from each current transformer without first opening any circuit. Each end of wire shall be provided with Brady sleeve heat-shrink type vinyl marker, fixed permanently to the wire, and imprinted with the wire number and identification letter or symbol corresponding to the Vendor's elementary diagrams. Suitable clamp type terminals shall be provided for all outgoing power feeder cables. All power cable terminals shall be located for both top and bottom entry and connection, and space shall be provided for cable terminations throughout. Number and size of copper conductors are shown on the plans.

17. Nameplate

A stainless steel nameplate shall be permanently fixed to an easily accessible area on the switchgear and shall include the following information:

a. Manufacturer's name and location
b. Serial number
c. Model number
d. System rating, volt bus rating , Amps
e. Short circuit rating, MVA

f. Equipment number

Nameplates shall be provide for front and rear face of each cubicle and for major devices thereon, such as instruments, control switches, relay etc. Nameplates of cubicles shall bear the description as shown on single line diagram.

Nameplates shall consist of letters and numbers engrave on laminated, thermosetting plastic material, providing black letters and numbers on a white background. Nameplates shall be attached using self-tapping screws. Size of letters and figures shall be approximately 3 mm for components nameplates and 11 mm for cubicle nameplates.

18. Shop Testing

The Supplier shall perform his standard shop and quality control testing, all applicable tests required by ANSI C37 and any special tests required herein. Certified test reports shall be submitted. Shop test shall include:

a. Dielectric tests in accordance with ANSI C37.20.2 Section 5.3.1.
b. Mechanical Operation tests to ensure proper functioning and interchangeability, as detailed in ANSI C37.20.2 Section 5.3.2.
c. Effectiveness of instrument transformer grounding, as detailed in ANSI C37.20.2 Section 5.3.3.
d. Control wiring correctness and continuity check, insulation test, polarity test, and sequence test, as detailed in ANSI C37.20.2 Section 5.3.4.

Neither the satisfactory performance of the equipment in the factory nor the witnessing and approval of the test by the purchaser shall relieve the supplier from its responsibility for the design and satisfactory performance of the equipment when installed at the site.

The manufacturer shall provide certified test reports (within 30 days of shipment).

19. Finish

The unit substation enclosures shall be cleaned of rust and excess weld, and given a minimum of two coats of phosphatizing or rust prevention treatment. Finish coats shall be ANSI Light Gray No. 61.

B. Unit Substation Transformer

The transformer is a part of a secondary unit substation and shall conform to the provisions in these special provisions. The unit substation transformer shall be a dry-type transformer with the following requirements:-

1. References

The unit substation transformers and all components shall be designed, manufactured and tested in accordance with the latest applicable standards of NEMA and ANSI.

2. Delivery, Storage and Handling

Equipment shall be handled and stored in accordance with manufacturer's instructions. One copy of these instructions shall be included with the equipment at time of shipment.

3. Field Measurements

Primary and secondary voltages shall be measured with appropriate tap adjustments.

4. Operation and Maintenance Manuals

The equipment operation and maintenance manuals shall be provided prior to shipment of the equipment. Operation and maintenance manuals shall include the following information:

a. Instruction books or leaflets.
b. Recommended renewal parts list.
c. Drawings and information required.

5. Ratings

The ratings of the transformer shall be as follows or as shown on the plans:

Contract No. 04-0120L4
Page 8 of 40
CCO No. 65 Suppl. No.
Contractor MCM
Res. Engr. B. Ghafghazi

kVA rating	750 kVA at AA/80°C, 885kVA at AA/115°C, (future) 1180 kVA at FA/115°C
Impedance	5.75%
HV	12.47 kV Delta
HV BIL	95 kV
HV Taps	Two taps with 2% steps above and two taps with 2% steps below
LV	480/277 Solidly Grounded Wye
LV BIL	30 kV

6. Construction

Transformer shall be cooled by natural air convection (AA) with provisions for future forced air. The electrical insulation system shall utilize Class H material in a fully rated 220°C system. Transformer design temperature rise shall be based on a 30°C average ambient over a 24-hour period with a maximum of 40°C. Solid insulation in the transformer shall consist of inorganic materials such as porcelain, glass fiber, electrical grade glass polyester, or Nomex. All insulating materials must be rated for continuous 220°C duty. The insulation between the high-and-low-voltage coils shall be more than sufficient for the voltage stress without the need of a varnish.

The transformer shall be designed for a temperature rise from AA/80°C to AA/115°C –future FA/115°C at 750 kVA, 885 kVA and 1180 kVA. The transformer shall be designed to meet the sound level standards for dry-type transformers as defined in NEMA TR1. The transformer shall be UL labeled. The transformer shall be of explosion-resistant, fire-resistant, air-insulated, dry-type construction, and cooled by the natural circulation of air through the windings. High-voltage and low-voltage windings shall be copper. Insulation between layers of the windings shall be by Insuldur paper or equal.

The high-voltage and low-voltage coil assembly shall be vacuum pressure impregnated (VPI) polyester. The high-voltage and low-voltage coil assembly shall be preheated to evaporate any moisture, then placed into a vacuum pressure tank. The air in the tank shall be evacuated; and at extremely low absolute pressure, all air bubbles are to be drawn out of the insulating materials. The resin shall be introduced to a level that submerges all parts while the vacuum is maintained for approximately one hour. Then the vacuum shall be released and pressure applied for approximately 1/2 hour, after which the coil shall be removed and placed in an oven for several hours in order for the resin to catalyze into a composite mass, completely sealing and binding the winding.

The transformer shall be supplied in a knockdown case design, for ease in fitting through limited openings, and shall be of heavy gage sheet steel construction, equipped with removable panels for access to the core and coils. Front and rear panels shall incorporate ventilating grills.

7. Finish

Each transformer shall be painted utilizing an initial phosphatizing cleaning treatment, followed by manufacturer's standard paint process baked on to a total of 0.1 mm average thickness. Units shall be painted ANSI 61 for indoor service and shall match the primary and secondary equipment.

8. Accessories

Transformer shall include:

A. Diagram instruction plate
B. Provisions for lifting and jacking
C. Removable case panel for access to high-voltage strap-type connector taps for de-energized tap changing
D. Two ground pads

9. Terminal Compartments

The transformer unit supplied shall include high voltage terminal compartment and low voltage terminal compartment. Connections between the primary device and transformer shall be cable and between the transformer and secondary shall be flexible bus braid.

10. Space Heaters

Space heater shall be provided to prevent moisture condensation. The space heater shall be controlled by thermostat. A terminal block shall be provided adjacent to the thermostat for power source connection. The heater shall be protected by perforated metal guards to prevent inadvertent contact with heater element.

11. Factory Testing

The standard factory tests shall be performed on all equipment provided under this section. All tests shall be in accordance with the latest version of ANSI and NEMA standards as follows:

A. Resistance measurements of all windings on the rated voltage connection of each unit and at the tap extremes of one unit only of a given rating on this project.
B. Ratio tests on the rated voltage connection and on all tap connections.
C. Polarity and phase-relation tests on the rated voltage connections.
D. No-load loss at rated voltage on the rated voltage connection.
E. Exciting current at rated voltage on the rated voltage connection.
F. Impedance and load loss at rated current on the rated voltage connection of each unit and on the tap extremes of one unit only of a given rating on this project.
G. Applied potential test.
H. Induced potential test.

The manufacturer shall provide three certified copies of factory test reports.

The special factory tests shall be performed on the equipment provided under this section. All tests shall be in accordance with the latest revision of ANSI and NEMA standards as follows:

A. Temperature test(s) shall be made on one unit only of a project covering one or more units of a given KVA rating.
B. The Department's representative shall witness factory tests as outlined above.

1. The manufacturer shall notify the Engineer two weeks prior to the date the tests are to be performed.
2. The manufacturer shall include the cost of transportation and lodging for up to three Department's representatives. The cost of meals and incidental expenses shall be the Department's responsibility.

12. Field Quality Control

The Contractor shall arrange for the services of a qualified factory-trained manufacturer's representative to assist the Contractor in installation and start-up of the equipment specified under this section for a period of 10 working days. The manufacturer's representative shall provide technical direction and assistance to the Contractor in general assembly of the equipment, connections and adjustments, and testing of the assembly and components contained herein.

The Contractor shall provide three copies of the manufacturer's field start-up report.

Primary and secondary voltages shall be measured for proper tap settings. The Contractor shall use a magnetometer for proper insulation resistance of the primary and secondary windings.

Adjust taps to deliver appropriate secondary voltage. A qualified factory-trained manufacturer's representative shall certify in writing that the equipment has been installed, adjusted and tested in accordance with the manufacturer's recommendations. The Contractor shall provide three copies of the certification by the representative of the manufacturer.

13. Training

The Contractor shall provide a training session for up to twelve Department's representatives for three normal workdays at a job site location determined by the Engineer. A qualified manufacturer's representative shall conduct the training session. The training program shall include instructions on the transformer, auxiliary devices and other major components.

C. Unit Substation Low Voltage Switchgear

The low voltage switchgear is a part of a unit substation and shall conform to the provisions in these special provisions. The low voltage switchgear shall consist of standard fabricated vertical sections bolted together to form a complete unit. The enclosures shall be NEMA Type 1.

The low voltage switchgear shall be single-ended 480 V consist of one main and feeder breakers as shown on the single-line diagrams. Each of the switchgear sections shall consist of a line-up of standard fabricated metal-enclosed vertical units equipped with electrically operated air circuit breakers.

Each steel unit forming part of the stationary assembly shall be a self-contained housing having one or more individual breaker or instrument compartments and a rear compartment for the busses, and outgoing cable connections. All digital metering devices and electronic data monitoring and communication devices for electrical power management system shall be mounted on the front door of compartments. Each circuit breaker compartment shall be equipped with primary and secondary contacts, rails, stationary levering mechanism parts, and required instrument current transformers. A blank formed steel door equipped with ventilation openings in the lower flange and supported on concealed hinges shall be provided for each circuit breaker compartment. The top of the unit shall be enclosed with removable steel sheets, which include necessary ventilation openings. Each compartment shall include the necessary 3-phase bus and connections between the bus and one

set of circuit breaker studs. Solderless type terminals on silver plated copper extensions for the outgoing cables shall be provided on the other set of circuit breaker studs. The main copper busses shall have the same continuous current ratings as the frame size rating of the switchgear main circuit breakers and shall be braced to withstand magnetic stresses developed by current equal to the momentary and interrupting current ratings of the main circuit breakers.

The switchgear busses shall be the isolated type. Shipping breaks and provisions for future bus extensions shall have silver-plated bolted connections. A copper equipment ground bus, 50 mm by 6 mm minimum extending the length of the switchgear and electrically connected to the enclosure in each section, shall be provided. The bus shall have clamp type terminals at each end for connection to external copper ground conductors.

1. Circuit Breakers

Circuit breakers shall be electrically operated, three-pole, air break, metal-enclosed (iron frame) draw out type, mechanically trip free.

The electrically operated breakers shall have stored energy operating mechanisms.

The electrically operated breakers stored energy closing mechanism shall be motor operated. Electrical closing and tripping shall be initiated by means of a release solenoid and shunt trip coils. Control voltage shall be 125 VDC. Provision shall be made for charging the electrically operated breakers manually, on loss of control power. Each breaker shall be equipped with adjustable type solid-state trip device as follows:

a. Current setting.
b. Long time delay.
c. Instantaneous pick-up unit as per single-line diagram.
d. Short time pick-up.
e. Short time delay.
f. Ground fault pick-up.
g. Ground fault delay.

The solid-state trip devices shall have indicators to show which element has operated, and shall have digital metering device functions of at least three individual phase current readouts. Operating, test and withdrawn positions shall be provided for each circuit breaker. The main contacts shall be disconnected in the test position, but auxiliary circuit contacts shall be maintained in this position for breaker and circuit testing operations. All contacts shall be disconnected in the withdrawn position. An auxiliary switch with a minimum of one normally-open and one normally-closed contact shall be provided with each feeder breaker. The switch shall be operable with the breaker in the test position. Each breaker shall have a mechanical flag indicator showing tripped or closed positions of breaker. Breakers shall have provisions for manual tripping. All circuit breakers of similar rating shall be electrically and mechanically interchangeable, so that any removable element can be inserted into, and function correctly, in any such draw out cavity. Mechanical interlocks shall prevent the breaker from being inserted or withdrawn from the operating position when the circuit breaker is in the closed position. The breaker control device shall have the ability to close and open the breaker with proper access code from a remote location over the communication network when the device is configured in remote close/open mode.

2. Current Transformers

Current transformers (CT) shall be mounted in breaker compartments and shall be easily accessible for inspection and maintenance. Current transformers shall conform to ANSI standard C57-13. They shall be of the dry compound insulated type. CT ratios are indicated on the single-line diagrams.

3. Potential Transformers

Potential transformers shall be mounted in an auxiliary unit. Current limiting fuses as required shall be provided on the primary and secondary side in dead-front fuse holders.

4. Digital Metering Devices

Digital metering devices shall be supplied, factory-wired, installed on the front panel and shall be flush mounted. Digital metering devices shall have the provisions for communication capability via local area network compatible with MODBUS protocol. Digital metering devices shall be capable of transmitting all information contained in the metering and solid-state trip unit.

Digital metering device, for monitoring main breakers, shall be multi-function solid-state type with digital display and shall have at least the following functions and features:

a. Metering functions:

1. Three - Line-to-line voltages
2. Three - Phase currents
3. One - Wattmeter
4. One - Var meter
5. One - Watt-hour meter
6. One - Peak demand meter
7. One - Power factor meter
8. One - Frequency meter

b. Communications:

1. One - RS-232 port
2. Non-volatile set points
3. Fault diagnosis
4. Push buttons for information retrieval and alarm/trip reset
5. Digital LED display window
6. Pre-trip data storage
7. Statistical data storage
8. Menu LED's
9. Alarm and trip LED's

5. Control Switches and Push Buttons

For electrically operated breakers, a two-position pistol-grip handle control switch shall be provided. The closed and open position of the breaker shall be clearly indicated by a indicating light visible from the front of the breakers. Indicating lamps shall be resistor type for DC and shall be "push to test" type. Colors shall be red for closed and green for open positions of the circuit breaker. For mechanically operated breakers, closing or opening shall be accomplished by a mechanical close or trip button located on the breaker escutcheon.

6. Wiring and Terminals

Secondary wiring in the individual switchgear units and interconnecting wires between various units shall be provided and shall consist of 600 V insulated wire. No. 14 AWG stranded copper for auxiliary wiring and No. 10 AWG stranded copper for current transformer circuits. The insulated wires shall be Type MTW, or SIS as listed in the National Electrical Code. All wiring shall be brought to terminal strips with clamp type, molded plastic terminals, preferably rail-mounted. One additional 8 terminal strip shall be supplied in each unit, for the connection of external auxiliary circuits. Terminal strips shall be preferably mounted vertically. Closed-end, crimp-type terminal lugs shall be used for all wiring connections to instruments, relays and other devices which are not provided with a clamp-type terminal. Instrument transformer secondary circuits shall be grounded at the switchgear. All leads from each individual instrument transformer shall be brought out to terminal blocks. Short circuiting type terminal blocks shall be furnished for all current transformer secondary leads and shall have provision for shorting together all leads from each current transformer without first opening any circuit. Each end of wire shall be provided with Brady sleeve heat-shrink type vinyl marker, fixed permanently to the wire, and imprinted with the wire number and identification letter or symbol corresponding to the Vendor's elementary diagrams. Suitable clamp type terminals shall be provided for all outgoing power feeder cables. All power cable terminals shall be located for both top and bottom entry and connection, and space shall be provided for cable terminations throughout. Number and size of copper conductors are shown on the plans.

7. Finish

The unit substation enclosures shall be cleaned of rust and excess weld, and given a minimum of two coats of phosphatizing or rust prevention treatment. Finish coats shall be ANSI Light Gray No. 61.

8. Nameplates

Each major assembly unit, each circuit breaker and each control unit shall be supplied with a nameplate engraved with legend. Nameplates shall be 2 mm thick plastic and shall have a white facing with black characters, and shall be affixed to the equipment.

Nameplates for each switchgear assembly shall be 150 mm long by 50 mm high. Nameplates for each circuit breaker and each control unit shall be a minimum of 100 m x 30 mm. Nameplate schedule shall be submitted to the Engineer for approval before engraving.

9. Accessories

Accessories shall consist of, but not necessarily be limited to, the following items:

a. A manual lifting device, extension rails test plug and crank handle to remove breaker units from compartments.
b. One portable static test set for solid-state trip devices.

10. Space heaters

Space heater shall be provided for each vertical section to prevent moisture condensation. The space heater shall be controlled by thermostat. A terminal block shall be provided adjacent to the thermostat for power source connection. The heater shall be protected by perforated metal guards to prevent inadvertent contact with heater element.

11. Inspection and Testing

Equipment furnished will be subject to expediting and shop inspection. Units shall be completely assembled, within shipping limitations, all dimensions shall be verified, and circuits shall be checked and tested prior to shipping.

The Engineer shall have the option to inspect fabrication and witness testing of the equipment. The Contractor shall notify the Engineer a minimum of three weeks in advance of the date of scheduled tests. The manufacturer shall include the cost of transportation and lodging for up to three Department's representatives. The cost of meals and incidental expenses shall be the Department's responsibility. An authorized representative of the Engineer shall have free entry during testing and fabrication of the equipment.

12. Training

The contractor shall provide a training session for up to twelve department's representatives for three normal workdays at a job site location determined by the Engineer . A qualified manufacturer's representative shall conduct the training session. The training program shall include instruction on the low voltage switchgear.

D. Low Voltage Control Center

The low voltage control center (LVCC) shall be a full-voltage non-reversing motor control center. The power circuit compartment of the LVCC shall be a motor starter unit which shall consist of a line starter which shall be a lighting contactor as specified, and a disconnect device which shall be a circuit breaker Type D as specified elsewhere in these special provisions. Also the power circuit compartment shall consist of circuit breakers Type C only as specified elsewhere in these special provisions. Details of the layout of the LVCC shall be as shown on the plans.

1. General

The Contractor shall furnish and install the LVCCs as specified herein and as shown on the plans. The LVCCs and all components shall be designed, manufactured and tested in accordance with the latest applicable standards of NEMA, ANSI and UL 845.

The LVCCs shall be suitable for and certified to meet all applicable seismic requirements of the California Building Code (CBC) for Zone 4 application. Guidelines for the installation consistent with these requirements shall be provided by the manufacturer and be based upon testing of representative equipment.

Equipment shall be handled and stored in accordance with manufacturer's instructions. One copy of these instructions shall be included with the equipment at time of shipment. The Contractor to verify equipment proposed shall fit into the available space. Installation shall be coordinated with other trades, and the approval authorities shall be notified of any interference or conflicts in the LVCC system power and control wiring.

2. Submittals

Each submittal package shall consist of six copies. Submittals shall be delivered to the Engineer at least 180 days prior to the start of the installation. The Engineer will be allowed 90 days for review of the submittals.

Submittals (For Review and Approval)

The following information shall be submitted to the Engineer:

a. Master drawing index
b. Front view elevation
c. Floor plan
d. Top view

e. Single line
f. Unit wiring diagrams depicting remote devices
g. Nameplate schedule
h. Starter and component schedule
i. Conduit entry/exit locations
j. Assembly ratings including:

   1. Short-circuit rating
   2. Voltage
   3. Continuous current

k. Major component ratings including:

   1. Voltage
   2. Continuous current
   3. Interrupting ratings

l. Cable terminal sizes.

Where applicable the following information shall be submitted to the Engineer:

1. Connection details between close-coupled assemblies
2. Composite floor plan of close-coupled assemblies
3. Key interlock schematic drawing and sequence of operations.

When requested by the Engineer, the following product information shall be submitted:

1. Descriptive bulletins
2. Product sheets.

Submittals (For Close Out)

The following information shall be submitted to the Engineer for record purposes:

a. Final as built plans. drawings.
b. Unit wiring diagrams.
c. Certified production test reports.
d. Installation information.
e. Seismic certification and equipment anchorage details.

3. Qualifications

The manufacturer of the assembly shall be the manufacturer of the major components within the assembly. For the equipment specified herein, the manufacturer shall be ISO 9000, 9001 or 9002 certified

4. Operation and Maintenance Manuals

Ten copies of the equipment operation and maintenance manuals shall be provided. Operation and maintenance manuals shall include the following information:

a. Instruction books and/or leaflets.
b. Recommended renewal parts list.
c. Drawings.

5. Ratings

The LVCCs shall be UL listed or recognized and meet NEMA and ANSI relevant standards for a Motor Control Center. The LVCCs shall be 600-V class suitable for operation on a three-phase, 60-Hz system. The system operating voltage and number of wires shall be as indicated on the plans.

6. Construction

Structures shall be totally enclosed, dead front, freestanding assemblies. The structures shall be 2,300 mm high and 540 mm deep for front-mounted units. Structures shall contain a horizontal wireway at the top, isolated from the horizontal bus and shall be readily accessible through a hinged cover. Adequate space for conduit and wiring to enter the top or bottom shall be provided without structural interference.

Compartments for mounting control units shall be incrementally arranged such that not more than six size 1 starters can be mounted within each vertical structure. Guide rails shall be provided. A vertical wireway with minimum of 0.025 m^2 of cross sectional area shall be adjacent to each vertical unit and shall be covered by a hinged door. Wireways shall contain steel rod cable supports.

All full voltage starter units through NEMA Size 5 shall be of the draw out type. Draw out provisions shall include positive guide rail system and stab shrouds to absolutely ensure alignment of stabs with the vertical bus. Draw out units shall have a tin-plated stab assembly for connection to the vertical bus. No wiring to these stabs shall extend into the bus compartment. Interior of all units shall be painted white for increased visibility. Units shall be equipped with side-mounted, positive latch pull-apart type control terminal blocks rated for 600 V. Knockouts shall be provided for the addition of future terminal blocks. In addition, a master terminal block, when Type C wiring is specified, shall be draw out and shall be located in the bottom wireway, readily accessible through a hinged cover. All control wire to be 14-gage minimum.

All draw out units shall be secured by a spring-loaded quarter turn indicating type fastening device located at the top front of the unit. Each unit compartment shall be provided with an individual front door.

An operating mechanism shall be mounted on the primary disconnect of each starter unit. It shall be mechanically interlocked with the unit door to prevent access unless the disconnect is in the OFF position. A defeater shall be provided to bypass this interlock. With the door open, an interlock shall be provided to prevent inadvertent closing of the disconnect. A second interlock shall be provided to prevent removal or re-insertion of the unit while in the ON position. Padlocking facilities shall be provided to positively lock the disconnect in the OFF position with one to three padlocks with the door open or closed. In addition, means shall be provided to padlock the unit in a partially withdrawn position with the stabs free of the vertical bus.

7. Bus

Each structure shall contain a main horizontal silver-plated copper bus, with minimum 800 A or as shown on the plans. The horizontal bus shall be rated at 50°C temperature rise over a 40°C ambient in compliance with UL standards. Vertical busses feeding unit compartments shall be copper and shall be securely bolted to the horizontal main bus. All joints shall be front accessible for ease of maintenance. The vertical bus shall have a minimum rating of 300 A for front mounted units.

The vertical bus shall be completely isolated and insulated by means of a labyrinth design barrier. It shall effectively isolate the vertical busses to prevent any fault generated gases to pass from one phase to another. The vertical bus shall include a shutter mechanism to provide complete isolation of the vertical bus when a unit is removed.

Busses shall be braced for 42,000 A-symmetrical.

8. Wiring and Terminations

Wiring shall be NEMA Class II, Type C.

9. Time Delay Relays

The time delay relays shall have a variable time delay unit with ON delay and knob adjustable timing range with maximum setting between 180 and 240 seconds and minimum setting of less than one second.

10. Miniature Relays

The miniature relays shall have contact with a minimum current rating of 10 A at 120 V(ac).

11. Combination Motor Starter

Combination motor starter units shall be full-voltage non-reversing, unless otherwise shown.

Each combination unit shall be rated 42,000 amperes interrupting current (AIC) symmetrical at 480 V. The motor starter shall provide adjustable magnetic protection and be provided with pin insert to stop magnetic adjustment at 1300 percent motor nameplate full load current to comply with NEC requirements. All combination starter units shall have a "tripped" position on the unit disconnect and a push-to-test button. The motor circuit protectors shall include transient override feature for motor inrush current.

Motor starters shall be electrically operated, electrically held, three-pole assemblies with arc extinguishing characteristics and shall have silver-to-silver renewable contacts. Motor starters shall have provisions for a total of eight NO or eight NC auxiliary contacts. The overload relay assembly shall be of the thermal bimetallic ambient compensated type. Overload

relays shall be reset from outside the enclosure by means of an insulated button. The overload relay shall have a built-in push-to-test button, electrically isolated NO-NC contacts and single phase sensitivity.

Each starter shall be equipped with a fused control power transformer, two indicating lights, HOA selector switch, and two NO contacts, unless otherwise scheduled on the plans. Device panel shall have space to accommodate six oil-tight pilot-control devices or indicating ammeters, voltmeters, or elapsed time meters.

12. Lighting Contactors

Electrically held lighting contactor shall be used for lighting loads from 10 to 300 A. The lighting contactors shall be UL listed or recognized and shall comply with applicable NEMA standards and shall be rated greater than or equal to the rating of its circuit breaker. The contactors shall be designed to withstand large initial inrush currents of tungsten and ballast lamp loads as well as non-motor (resistive) loads without contacts welding. Contactors shall be capable of accepting up to eight auxiliary contacts - top or side mounted up to 60 A and side mounted only up to 100 A. Contactors shall be capable of being operated by AC or DC control.

13. Incoming Feeder Terminations and Device

Incoming cable shall terminate within the control center on a main lug termination point. Main lug terminations shall have adequate dedicated space for the type and size of cable used and the lugs shall be standard mechanical screw with anti-turn feature.

14. Space Heaters

Space heaters shall be provided with the LVCC to prevent moisture condensation on the inside of each compartment. The space heaters shall be sized to the latest standards and controlled by a thermostat. A terminal block shall be provided adjacent to the thermostat for power source connection. The heaters shall be protected by perforated metal guards to prevent inadvertent contact with the heater elements.

15. Enclosures

The type of enclosure shall be in accordance with NEMA standards Type 1A with gasketed doors. All enclosing sheet steel, wireways and unit doors shall be gasketed.

16. Nameplates

Each unit will have 26 x 70-mm hot stamped nameplate. The lettering shall be black 4.75 mm high, on a white background.

17. Finish

The LVCC shall be given a phosphatizing pretreatment. The paint finish shall be an anionic, thermoset acrylic. Manufacturer's standard color shall be used. The control center finish shall pass 600 hours of corrosion resistance testing in conformance with the requirements in ASTM Designation: B 117.

18. Examination

The Contractor shall fully inspect shipments for damage. Damage shall be reported to the manufacturer, and a claim shall be filed upon the shipper, if necessary. The Contractor shall verify NEC clearances as dictated on the plans prior to installation. UL labeling of the assembly shall be verified prior to installation.

19. Factory Testing

The Contractor shall have the motor control centers tested in a high-power laboratory to prove adequate mechanical and electrical capabilities. All factory tests required by the latest ANSI, NEMA and UL standards shall be performed. The Contractor shall provide three certified copies of factory test reports.

The Department's representative shall witness the factory tests as outlined above. The manufacturer shall notify the Engineer three weeks prior to the date the tests are to be performed. The manufacturer shall include the cost of transportation and lodging for up to three Department's representatives. The cost of meals and incidental expenses shall be the Department's responsibility.

20. Installation

The Contractor shall supply the Engineer three copies of the installation instructions and follow the installation instructions supplied by the manufacturer. Control wiring shall be as shown on the plans except as modified by the approval

and submittal process. All local and remote devices shall be interfaced into the control wiring and operational systems for each load.

21. Field Testing

The requirements as stipulated in the NETA testing procedure for this type of motor control center assembly shall be followed. Generate a field report on tests performed, test values experienced, and make available to Engineer upon request. A qualified factory-trained manufacturer's representative shall certify in writing that the equipment has been installed, adjusted and tested in accordance with the manufacturer's recommendations. Equipment shall be inspected prior to the generation of any reports. The Contractor shall provide three copies of the manufacturer's representative's certification.

22. Training

The Contractor shall provide a training session for up to ten State personnel for three work days at the job site or other office location chosen by the Engineer. The Contractor shall arrange for a qualified manufacturer's representative to conduct the training session. The training program shall consist of the following:

a. Review of the MCC one-line drawings and schedules.
b. Review of the factory record shop drawings and placement of the various cells.
c. Review of each type of starter cell, components within, control, and power wiring
d. Review contactor coil replacement and contact replacement procedures.
e. Discuss the maintenance time table and procedures to be followed in an on going maintenance program.
f. Provide three-ring binders to participants complete with copies of drawings and other course material covered.

E. Utility and Lighting Panels

The utility and lighting panels shall conform to the following requirements and as shown on the plans:

a. The bus shall be copper.
b. Boxes shall be made from code gage galvanized steel.
c. The trim shall be made form code gage steel and painted ANSI 61 gray.
d. Doors 1200 mm or less shall have a single point lock. Doors over 1200 mm shall have a three point catch and lock.
e. The ground bar shall be standard, bolted in box.
f. The enclosure shall be NEMA Type 12. The top and bottom gutters shall be minimum 139 mm and the side gutters shall be 152 mm. Service platform panels shall be NEMA Type 4X, made from 316 stainless steel.

~~The Contractor shall install single-phase and three-phase general-purpose individually mounted panels, self cooled, as specified herein and as shown on the plans.~~ The panels and all components shall be designed, manufactured and tested in accordance with the latest applicable standards of ANSI and NEMA.

1. Submittals

The following information shall be submitted to the Engineer:

a. Dimension drawing and weight
b. Technical certification sheet
c. Transformer ratings
d. Component ratings

2. Qualifications

For the equipment specified herein, the manufacturer shall be ISO 9000, 9001 or 9002 certified. The manufacturer of this equipment shall have produced similar electrical equipment. When requested by the Engineer, an acceptable list of installations with similar equipment shall be provided.

3. Ratings

Voltage ratings shall be as shown on the plans. Units shall be designed for continuous operation at rated kVA, for 24 hours a day, 365 days a year operation, with normal life expectancy as defined in ANSI C57.96. Where applicable, transformer sound levels shall not exceed 45 dB for a 10 to 50 kVA rated self-cooled transformer as defined by ANSI and NEMA.

4. Construction

Each ~~single phase~~ utility or lighting panel shall include a main ~~primary~~ breaker and ~~Main primary and feeder breakers~~ shall be enclosed with a padlock lockable hinged door.

~~Each three phase to single phase panel shall include a main breaker, step down transformer breaker. Main primary, secondary and feeder breakers shall be enclosed with a padlock lockable hinged door.~~

5. Transformer

~~Transformers for the three phase panels shall be insulated with a 185°C insulation system.~~ Required performance shall be obtained without exceeding the above-indicated temperature rise in a 40°C maximum ambient, with a 30°C average over 24 hours. All insulation materials shall be flame-retardant and shall not support combustion in conformance with the requirements in ASTM Designation D 635.

Transformer core shall be constructed with high-grade, non-aging, grain-oriented silicon steel with high magnetic permeability, and low hysteresis and eddy current losses. Maximum magnetic flux densities shall be substantially below the saturation point. The transformer core volume shall allow efficient transformer operation at 10 percent above the nominal tap voltage. The core laminations shall be tightly clamped and compressed. Coils shall be wound of electrical grade aluminum with continuous wound construction. The core and coil assembly shall be completely encapsulated in a proportioned mixture of resin and aggregate to provide a moisture-proof, shock-resistant seal. The core and coil encapsulation system shall minimize the sound level. The core of the transformer shall be grounded to the enclosure. The transformer shall include two 5 percent taps below nominal voltage.

6. Enclosure

~~The enclosure shall be made of heavy gage steel and the maximum temperature of the enclosure shall not exceed 90°C. The enclosure shall be NEMA 13R with lifting eyes...Panels shall be mounted in additional fiberglass enclosures as shown on the plans.~~ Each panel to be mounted outside on the platforms shall be installed in a NEMA 4X ~~fiberglass or~~ 316 stainless steel enclosure.

7. Circuit Breaker Type B

The circuit breaker Type B shall be a molded case circuit breaker providing complete circuit overcurrent protection by having inverse time and instantaneous tripping characteristics and shall be designed, manufactured, assembled and tested in accordance with UL 489 and NEMA AB-1 Standards. The frame rating and settings shall be as specified on the plans.

The molded case circuit breakers shall be operated by a toggle-type handle and shall have a quick-make, quick-break over-center switching mechanism that is mechanically trip free from the toggle handle so that the contacts cannot be held closed against short circuits and abnormal currents. All poles shall be so constructed that contacts open, close and trip simultaneously in the either ON or OFF position. All breaker covers shall have molded-in "ON" and "OFF" position.

The circuit breaker frames shall employ high strength, molded-polyester, glass-reinforced cases and covers. The breaker frame shall have legible, tamper-proof nameplates containing maximum frame ampere ratings, maximum voltage ratings and interrupting ratings in accordance with UL standards. All breaker frames sizes shall have external means for manually tripping the breaker and exercising the mechanism and trip latch member.

The molded case circuit breakers shall have inverse time and instantaneous tripping characteristics. Automatic tripping of the breaker shall be clearly indicated by the handle position. Contacts shall be non-welding silver alloy and arc extinction shall be accomplished by means of arc chutes.

The circuit breaker rating shall be as specified on the plans and as required by the load and coordination studies.

Ground fault protection shall be provided where indicated. Shunt trips, bell alarms and auxiliary switches shall be provided. Circuit breakers to be mounted outside on the platforms shall be installed in NEMA 4X, 316 stainless steel enclosures.

F. DC Panel

The DC panel shall conform to the following requirements and as shown on the plans:

a. The bus shall be copper.
b. Boxes shall be made from code gage galvanized steel.
c. The trim shall be made form code gage steel and painted ANSI 61 gray.
d. Doors 1200 mm or less shall have a single point lock. Doors over 1200 mm shall have a three point catch and lock.
e. The ground bar shall be standard, bolted in box.
f. The enclosure shall be NEMA Type 12. The top and bottom gutters shall be minimum 139 mm and the side gutters shall be 152 mm.
g. The panel shall be rated at 125 VDC with a 2 pole main breaker rated for 100 A.

h. The panel shall have a total number of 24 branch circuit poles.
i. Circuit breakers shall be 2 pole, 20 A, 10 kAIC interrupting capacity.

Submittals

The following information shall be submitted to the Engineer:

a. Dimension drawing and weight
b. Technical certification sheet
c. Component ratings

G. Dry Type Transformer

The Contractor shall install single-phase and three-phase general purpose individually mounted dry-type transformers of the two-winding type, self-cooled as specified herein, and as shown on the contract plans. The transformers and all components shall be designed, manufactured and tested in accordance with the latest applicable standards of ANSI and NEMA.

1. Submittals

The following information shall be submitted to the Engineer for review and approval:

a. Dimension drawing and weight.
b. Technical certification sheet.
c. Conduit entry and exit locations.

2. Qualifications

For the equipment specified herein, the manufacturer shall be ISO 9000, 9001 or 9002 certified. The manufacturer of this equipment shall have produced similar electrical equipment. When requested by the Engineer, an acceptable list of installations with similar equipment shall be provided. The transformers shall be suitable for and certified to meet all applicable seismic requirements of the California Building Code (CBC) for Zone 4 application.

3. Ratings

The transformer's kVA and voltage ratings shall be as shown on the plans.–Transformers shall be designed for continuous operation at rated kVA, for 24 hours a day, 365 days a year operation, with normal life expectancy as defined in ANSI C57.96. Transformer sound levels shall not exceed the following ANSI and NEMA levels for self-cooled ratings:

a. Up to 9 kVA less than 40 dB.
b. 10 to 50 kVA less than 45 dB.

4. Construction

Transformers shall be insulated as follows:

a. 2 kVA and below: 150°C insulation system based upon 80°C rise.
b. 3 to 15 kVA: 185°C insulation system based upon 115°C rise.
c. 15 kVA and above: 220°C insulation system based upon 150°C rise.

All insulation materials shall be flame-retardant and shall not support combustion in conformance with the requirements in ASTM Designation D 635. Transformer core shall be constructed with high-grade, non-aging, grain-oriented silicon steel with high magnetic permeability, and low hysteresis and eddy current losses. Maximum magnetic flux densities shall be substantially below the saturation point. The transformer core volume shall allow efficient transformer operation at 10 percent above the nominal tap voltage. The core laminations shall be tightly clamped and compressed. Coils shall be wound of electrical grade aluminum with continuous wound construction. On units rated 15 kVA and below and all outdoor transformers, the core and coil assembly shall be completely encapsulated in a proportioned mixture of resin and aggregate to provide a moisture-proof, shock-resistant seal. The core and coil encapsulation system shall minimize the sound level. The transformer shall include two 5 percent taps below nominal voltage.

5. Enclosure

~~The enclosure shall be~~ Transformers for indoor use shall have enclosures made of heavy-gage steel. All transformers shall be equipped with a wiring compartment suitable for conduit entry and large enough to allow convenient wiring. The maximum temperature of the enclosure shall not exceed 90°C. The core of the transformer shall be grounded to the enclosure.

The transformer enclosures shall be general purpose ventilated type ~~suitable~~ for indoor service only. Transformers mounted outside on the platforms shall have NEMA Type 4X enclosures constructed of 316 stainless steel. Enclosures shall be finished with ANSI 61 color.

H. Safety Switch

Submittals

The following information shall be submitted to the Engineer for review and approval:

a. Dimension drawing and weight.
b. Technical certification sheet.
c. Conduit entry and exit locations.

The safety switch shall be a heavy-duty low-voltage safety switch with the following requirements.

a. Rated for 600 VAC.
b. Terminals be copper-aluminum.
c. The enclosure shall be NEMA Type 12 dust-tight and oil-tight enclosure
d. A metal nameplate shall be mounted on the front cover that contains switch information (type, catalog number, electrical ratings V, A, and horsepower)
e. Handle whose position is easily recognizable and pad lockable in the "Off" position.
f. Visible blades.
g. Reinforced fuse clips.
h. Nonteasible, positive, quick-make quick-break mechanisms.
i. Switch assembly plus operating handle as an integral part of the enclosure.
j. Switch shall be UL listed, horsepower rated, meet Federal Specification WS-885c, and NEMA Specifications KSI-1990.
k. Switch shall have defeatable door interlocks that prevent the door from opening when the operating handle is in the "ON" position.
l. Switch shall have line terminal shields.

I. Battery System

The stationary battery system shall include ten 12 V batteries and a safety switch. Each battery shall be comprised of six 2 V cells. The battery system, when floating fully charged at 25 C, and the capacity has deteriorated 80 percent of the manufacturer's rating shall be capable of serving the discharge duty with the charger out of service. The batteries shall have an 8-hour discharge rate, at a temperature of 25°C, to a final voltage of 1.75 volts per cell. The electrolyte in each cell shall have a specific gravity of 1.3 at 25°C. The load profiles for the battery system are as follows:

a. Current Draw 0-1 minute
   Continuous = 20 A (4 A West Span Lighting Control and 16 A House Keeping)
   Momentary = 160 A (16 breakers tripped simultaneously)
   Total = 180 A
b. Current Draw 1-479 minutes
   Continuous = 20 A
   Total = 20 A
c. Current Draw 479-480 minutes
   Continuous = 20 A
   Momentary = 90 A (closing of one breaker)
   Total = 110 A

Contract No. 04-0120L4
Page 20 of 40
CCO No. 65 Suppl. No.
Contractor MCM
Res. Engr. B. Ghafghazi

The cell jar shall be made of standard flame retardant polypropylene. The cells shall be designed to be individually removed or installed. Internally each cell shall not have any free electrolyte, but be of an absorbed recombinant design utilizing lead-calcium plates without any cadmium (Cd) component. The pressure relief valve shall be constructed to prevent acid leakage and oxidation. The cell's material must also be thermally stable to withstand cell temperature excursions if battery is exposed to adverse temperature or charging conditions. The pressure rating release of the valve shall be limited to a maximum of 31 kPa to minimize forcing of acid between post seal and cover. The cell post shall be designed with dual seal. The first seal shall be of an 0-ring design allowing the entire seal structure freedom of movement due to changes in internal cell pressure, temperature, aging, shipment and seismic events. Neither seal shall use heat for adhesion.

The modular battery system shall be designed with steel modules with separate cell compartments. A polarized bracket shall be provided to automatically align the individual modules in the proper polarity orientation to each other in horizontal stacking and side by side configuration. A cooling air channel shall be incorporated into the module system design to provide free convection airflow between stacks. The battery system modules shall be bolted to the substation foundation to meet the seismic requirements of these special provisions.

A safety shield shall be designed of a non-conductive material and sized to cover the front of each module. Each safety shield shall be individually removable with a quick connect lift-off.

A drip pan shall be installed under the battery system to catch any leaks from the batteries.

The batteries shall have an expected life of twenty years.

The battery safety switch shall be a heavy-duty low-voltage safety switch and meet the following requirements:

a. Rated for 125 VDC.
b. Terminals shall be copper-aluminum.
c. The enclosure shall be NEMA Type 12 dust-tight and oil-tight for industrial applications.
d. A metal nameplate shall be mounted on the front cover that contains switch information (type, catalog number, electrical ratings V, A, and horsepower Hp rating)
e. Handle whose position is easily recognizable and padlockable in the "Off" position.
f. Visible blades.
g. Reinforced fuse clips.
h. Nonteasible, positive, quick-make quick-break mechanisms.
i. Switch assembly plus operating handle as an integral part of the enclosure.
j. Switch shall be UL listed, horsepower Hp rated, meet Federal Specification WS-885c, and NEMA Specifications KSI-1990.
k. Switch shall have defeatable door interlocks that prevent the door from opening when the operating handle is in the "ON" position.
l. Switch shall have line terminal shields.

J. Battery Charger and Rectifier

The battery charger and rectifier shall provide under normal conditions, full rated output for continuous load and tripping of one of the circuit breakers of the switchgear or charging of the 125 VDC on line battery system described elsewhere in these special provisions.

The charger and rectifier shall meet the following requirements:

a. Input Power: Single phase, 120 V(ac), 60 Hz.
b. Output Voltage: 125 VDC
c. Output Current: As required to supply the normal loads and simultaneously recharge batteries in specified time.
d. DC Voltage Regulation: ± 0.5 percent under all conditions of line, load, frequency and temperature variations.
e. DC Output Ripple: 2 percent with battery.
f. Automatic current limiting.
g. Overcurrent Protection: AC circuit breaker, DC circuit breaker.
h. Isolation: DC charging circuit isolated from the AC input circuit.
i. Metering: Separate DC voltmeter and DC ammeter, 88 mm rectangular pivot and jewel meters with ± 2 percent full scale accuracy
j. Modes of operation: Switch controlled float and equalize modes.
k. Enclosure: NEMA Type 1 steel case with baked on ANSI 61 gray enamel finish.
l. The charger shall be capable of recharging the batteries from discharged condition to a full charged condition in twenty-four hours while maintaining the normal steady state loads.

DIST	COUNTY	ROUTE	KILOMETER POST TOTAL PROJECT	SHEET NO	TOTAL SHEETS
04	Ala	80	1.6/2.7	391 R2	643

REGISTERED ELECTRICAL ENGINEER — DATE 05/15/06

1-29-07
PLANS APPROVAL DATE

REGISTERED PROFESSIONAL ENGINEER — JENS ERLINGSSON No. 8249 Exp. 9/30/08 ELECTRICAL — STATE OF CALIFORNIA

PB POWER, Inc.
A Parsons Brinckerhoff Company
303 Second St., Suite 700N
San Francisco, CA 94107-1317

The State of California or its officers or agents shall not be responsible for the accuracy or completeness of electronic copies of this plan sheet.

To get to the Caltrans web site, go to: http://www.dot.ca.gov

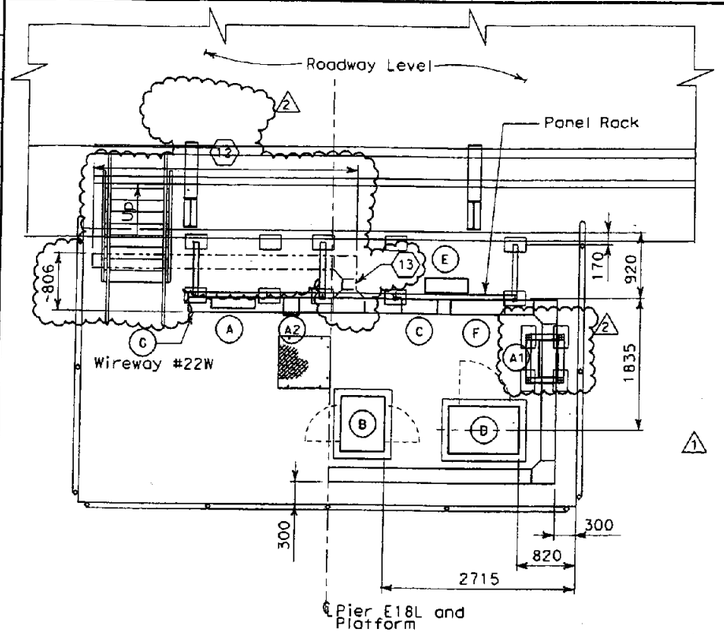

SERVICE PLATFORM #22W EQUIPMENT ARRANGEMENT PLAN

SCALE 1:40

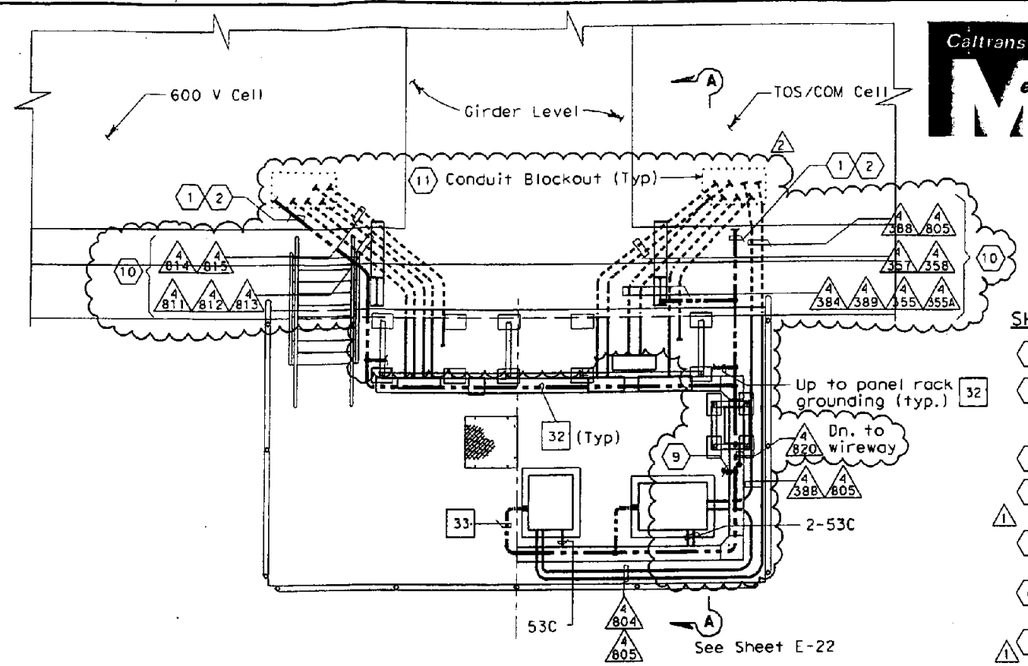

CONDUIT AND GROUNDING PLAN

SCALE 1:40

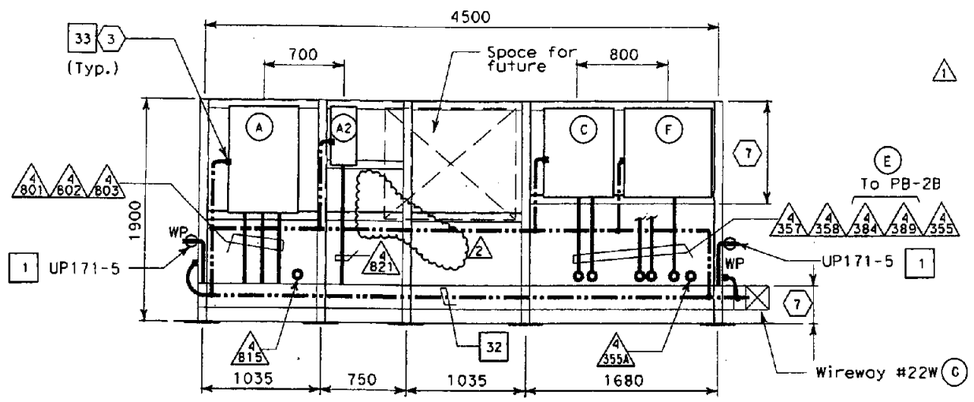

PANEL RACK ELEVATION

SCALE 1:25

MARK	DATE	DESCRIPTIONS	REV	CK	CCO NO.
2	3/13/09	Added description of equip D, sheet notes 10, 11, 12 & 13. Revised XFMR size, sheet notes 2 & 8, location and mounting, conduit entry to TOS splice cabinet and conduit locations. Deleted sheet notes 4, 5 and 6.	RSB	EJL	65 REV
1	4/30/08	Revised mini power center to individual components. Revised panel sizes and panel rack of PB-7B and PB-7C. Add conduit numbers.	ECR	EJL	65

REVISIONS

REGISTERED PROFESSIONAL ENGINEER — FADI WALIEDDINE No. 11465 Exp. 12/31/2009 ELECTRICAL — STATE OF CALIFORNIA

CONTRACT CHANGE ORDER NO. 65
SHEET 22 OF 40 8/3/09

THIS PLAN IS ACCURATE FOR ELECTRICAL WORK ONLY.

SHEET NOTES: (Continuation)

(12) Alternate wireway configuration, it shall be located between the panel rack support and the back of stairway riser.

(13) This fitting may be substituted with a flexible type connection to suit the space.

EQUIPMENT SCHEDULE: (8)

(A) Utility Panel UP-171
208/120 V, 3 Phase, 4 wire, (NEMA 4X).
Size: 914 H x 610 W x 152 D. (PB-8A)

(A1) 15 KVA Transformer, 3 Phase, 4 wire
480V - 208/120 V, 60 Hz, (NEMA) 4X)
Size: 441 H x 508 W x 267 D

(A2) Enclosed molded case circuit breaker, (NEMA 4X)
Size: 506 H x 225 W x 237 D

(B) Controller Cabinet #TOS-22WA
Size: 1625 H x 615 W x 768 D

(C) Telephone Terminal Box #TEL-22W. (PB-7C)
Size: 762 H x 508 W x 203 D

(D) TOS splice cabinet #TOS-22WS.
Size: 1400 H x 980 W x 660 D.
Caltrans Type P (Similar)

(E) PB-2B for TOS/COM, mounted on panel rack.
Size: 762 H x 610 W x 203 D

(F) SCADA Communication Terminal Box #COM-22W. (PB-7B)
Size: 762 H x 762 W x 203 D

(G) 600 V, Wireway (NEMA 4X)
Size: 203 H x 203 W

SHEET NOTES:

(1) See sheet E-25 for continuation.

(2) For service platform grounding, use #4/0 AWG bare copper ground cables tapped from ground bars. See sheet E-25, routed in 21c.

(3) Metal and panel enclosure grounding.

(4) ~~(8) 103 mm RGS conduit thru pipe sleeves, cast in place. (TOS/COM)~~

(5) ~~(5) 78 mm RGS conduit thru pipe sleeves, cast in place. (600 V)~~

(6) ~~The placement of embedded conduit shall be detailed on the Structural Plans.~~

(7) Contractor shall locate to suit.

(8) Equipment dimensions and sizes shown shall be verified by Contractor prior to installation. The arrangement are in compliance with NEC guidelines, the Contractor shall maintain panel sizes as indicated.

(9) Connection to transformer neutral.

(10) Conduit end shall be provided with ground bushings. Bond all conduits with #2 AWG bare copper wire, connected to the ground bar, see Detail 1, sheet E-43.

(11) Once the conduits are installed thru the conduit blockout, Refer to structures plan sheets for details.

NOTES:

1. References:
   - For actual location of service platform 22W, see sheet E-11.
   - For schedule of utility panel UP-171 see sheet E-45.
   - TOS equipment are shown for conduit routing only. For typical details of TOS controller and devices, see sheets starting at E-204.
   - For typical panel arrangement details of SCADA Communication Terminal Box, see sheet E-164.
   - For typical grounding details, see sheet E-43.
   - For Pull Box Schedule, see sheet E-44.
   - For typical platform sections and details, see sheet E-22.
   - For conduit and cable tray schedule, see sheets starting at E-224.
2. Deleted

DETAILS
ROADWAY AND GIRDER LEVEL WESTBOUND SERVICE PLATFORM #22W

SCALE AS NOTED

ALL DIMENSIONS ARE IN MILLIMETERS UNLESS OTHERWISE SHOWN

E-20

STATE OF CALIFORNIA - DEPARTMENT OF TRANSPORTATION — Caltrans

DESIGN OVERSIGHT: BEHZAD GOLEMOHAMMADI

CALCULATED/DESIGNED BY: FK — DATE 2/06 — REVISED BY
CHECKED BY: AB — 2/06 — DATE REVISED

LAST REVISION 00-00-00 — DATE PLOTTED => 3/26/2009 — TIME PLOTTED => 9:32:56 AM

DGN FILE =>T:\13103\MS\pse\OTD-Contract 1\CCO\Electrical\CCO-65\service platform\401201ug020rb.dgn

DIST	COUNTY	ROUTE	KILOMETER POST TOTAL PROJECT	SHEET No.	TOTAL SHEETS
04	Ala	80	1.6/2.7	392 R2	643

REGISTERED ELECTRICAL ENGINEER — 05/15/06 DATE

1-29-07
PLANS APPROVAL DATE

REGISTERED PROFESSIONAL ENGINEER — JENS ERLINGSSON No. 8249 Exp. 9/30/08 ELECTRICAL — STATE OF CALIFORNIA

PB POWER, Inc.
A Parsons Brinckerhoff Company
303 Second St., Suite 700N
San Francisco, CA 94107-1317

The State of California or its officers or agents shall not be responsible for the accuracy or completeness of electronic copies of this plan sheet.

To get to the Caltrans web site, go to: http://www.dot.ca.gov

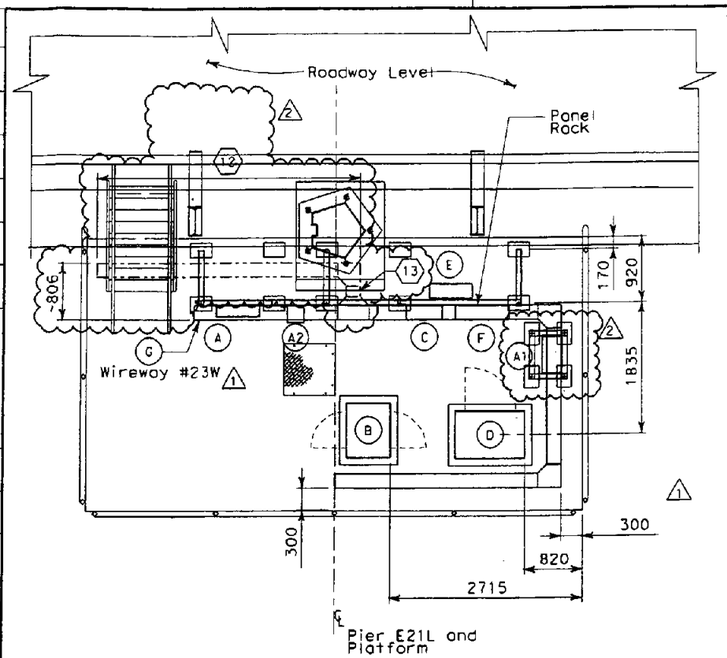

SERVICE PLATFORM #23W EQUIPMENT ARRANGEMENT PLAN

SCALE 1:40

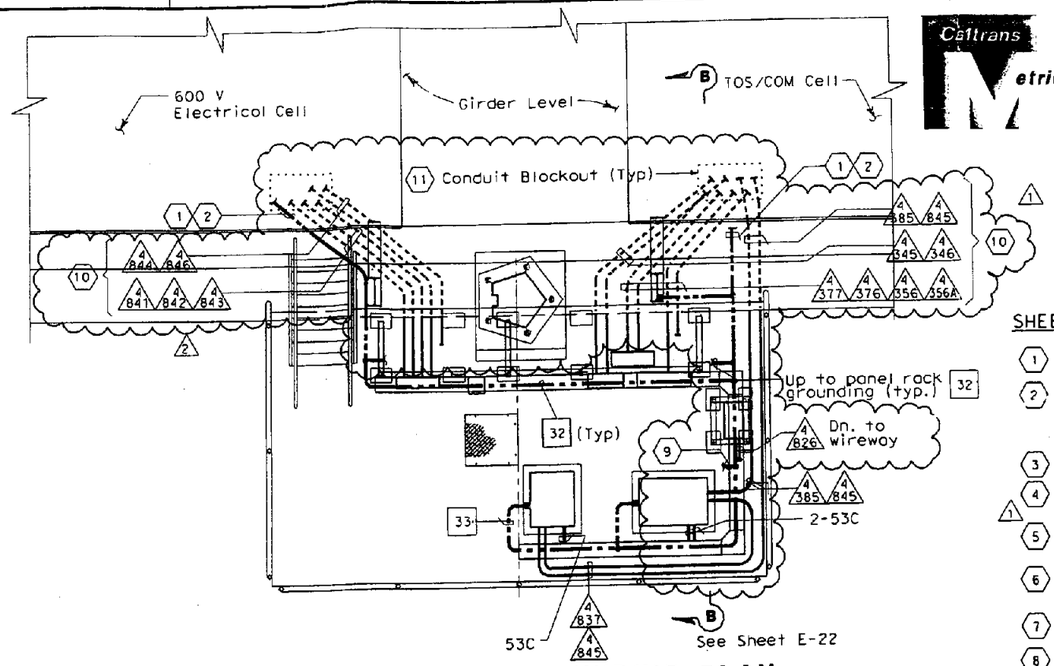

CONDUIT AND GROUNDING PLAN

SCALE 1:40

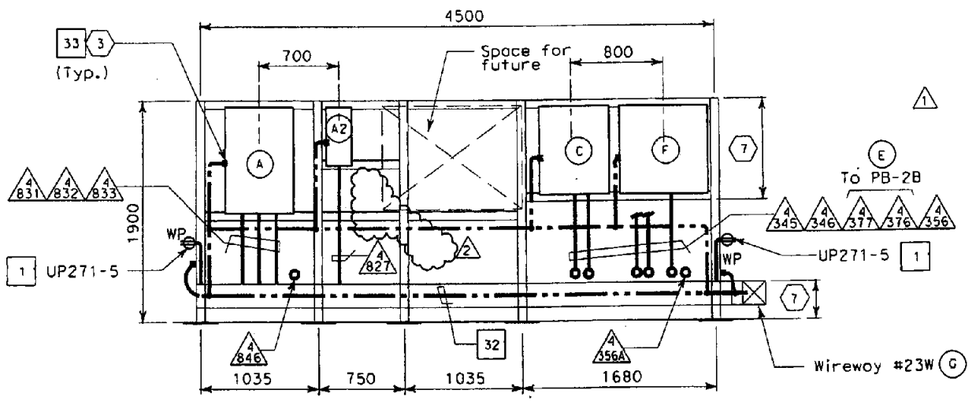

PANEL RACK ELEVATION

SCALE 1:25

SHEET NOTES:

1. See sheet E-28 for continuation.
2. For service platform grounding, use #4/0 AWG bare copper ground cables tapped from ground bars. See sheet E-25, routed in 21c.
3. Metal and panel enclosure grounding.
4. ~~(8)-103 mm RGS conduit thru pipe sleeves, cast in place. (TOS/COM)~~
5. ~~(5) 78 mm RGS conduit thru pipe sleeves, cast in place. (600 V)~~
6. ~~The placement of embedded conduit shall be detailed on the Structural Plans.~~
7. Contractor shall locate to suit.
8. Equipment dimensions and sizes shown shall be verified by Contractor prior to installation. The arrangement are in compliance with NEC guidelines, the Contractor shall maintain panel sizes as indicated.
9. Connection to transformer neutral.
10. Conduit end shall be provided with ground bushings. Bond all conduits with #2 AWG bare copper wire, connected to the ground bar, see Detail 1, sheet E-43.
11. Once the conduits are installed thru the conduit blockout, refer to structures plan sheets for details.

SHEET NOTES: (Continuation)

12. Alternate wireway configuration, it shall be located between the panel rack support and the back of stairway riser.
13. This fitting may be substituted with a flexible type connection to suit the space.

EQUIPMENT SCHEDULE: (8)

- (A) Utility Panel UP-172, 100A 208/120 V, 3 Phase, 4 wire. (NEMA 4X). Size: 914 H x 610 W x 152 D. (PB-8A)
- (A1) 15 KVA Transformer, 3 Phase, 4 wire ~~480V - 208/120 V, 60 Hz, (NEMA) 4X)~~ Size: 441 H x 508 W x 267 D
- (A2) Enclosed molded case circuit breaker, (NEMA 4X) Size: 506 H x 225 W x 237 D
- (B) Controller Cabinet #TOS-23WA Size: 1625 H x 615 W x 768 D
- (C) Telephone Terminal Box #TEL-23W. (PB-7C) Size: 762 H x 508 W x 203 D
- (D) TOS splice cabinet #TOS-23WS. Size: 1400 H x 980 W x 660 D. (Caltrans Type P (Similar))
- (E) PB-2B for TOS/COM, mounted on panel rack. Size: 762 H x 610 W x 203 D
- (F) SCADA Communication Terminal Box #COM-23W. (PB-7B) Size: 762 H x 762 W x 203 D
- (G) 600V, Wireway #23W (NEMA 4X) Size: 203 H x 203 W

NOTES:

1. References:
   - For actual location of service platform 23W, see sheet E-12.
   - For schedule of utility panel UP-172 see sheet E-46.
   - TOS equipment are shown for conduit routing only. For typical details of TOS controller and devices, see sheets starting at E-204.
   - For typical panel arrangement details of SCADA Communication Terminal Box, see sheet E-164.
   - For typical grounding details, see sheet E-43.
   - For Pull Box Schedule, see sheet E-44.
   - For typical platform sections and details, see sheet E-22.
   - For conduit and cable tray schedule, see sheets starting at E-224.
2. Deleted

DETAILS
ROADWAY AND GIRDER LEVEL WESTBOUND SERVICE PLATFORM #23W

SCALE AS NOTED

MARK	DATE	DESCRIPTIONS	REV	CK	CCO NO.
2	3/13/09	Added description of equip D, sheet notes 10, 11, 12 & 13. Revised XFMR size, sheet notes 2 & 8, location, mounting, conduit entry to TOS splice cabinet and conduit locations. Deleted sheet notes 4, 5 and 6.	RSB	EJL	65 REV
1	4/30/08	Revised mini power center to individual components. Revised panel sizes and panel rack of PB-7B and PB-7C. Add conduit numbers.	ECR	EJL	65

REVISIONS

REGISTERED PROFESSIONAL ENGINEER — FADI WALIEDDINE No. 11465 Exp. 12/31/2009 ELECTRICAL — STATE OF CALIFORNIA

CONTRACT CHANGE ORDER NO. 65
SHEET 23 OF 40 8/3/09

THIS PLAN IS ACCURATE FOR ELECTRICAL WORK ONLY.

ALL DIMENSIONS ARE IN MILLIMETERS UNLESS OTHERWISE SHOWN

E-21

STATE OF CALIFORNIA - DEPARTMENT OF TRANSPORTATION — Caltrans

DESIGN OVERSIGHT: BEHZAD GOLEMOHAMMADI

CALCULATED/DESIGNED BY: FK — CHECKED BY: AB — DATE: 2/06 — REVISED BY — DATE REVISED

LAST REVISION 00-00-00 — DATE PLOTTED => 4/17/2009 — TIME PLOTTED => 12:10:42 PM

DGN FILE => T:\13103\WS\pse\OTD-Contract 1\CCO\Electrical\CCO-65 service platform\40120Luo021r2.dgn

DIST	COUNTY	ROUTE	KILOMETER POST TOTAL PROJECT	SHEET NO	TOTAL SHEETS
04	Ala	80	1.6/2.7	393 R1	643

REGISTERED ELECTRICAL ENGINEER 05/15/06 DATE

1-29-07
PLANS APPROVAL DATE

PB POWER, Inc.
A Parsons Brinckerhoff Company
303 Second St., Suite 700N
San Francisco, CA 94107-1317

REGISTERED PROFESSIONAL ENGINEER JENS ERLINGSSON No. 8249 Exp. 9/30/08 ELECTRICAL STATE OF CALIFORNIA

The State of California or its officers or agents shall not be responsible for the accuracy or completeness of electronic copies of this plan sheet.

To get to the Caltrans web site, go to: http://www.dot.ca.gov

Caltrans Metric

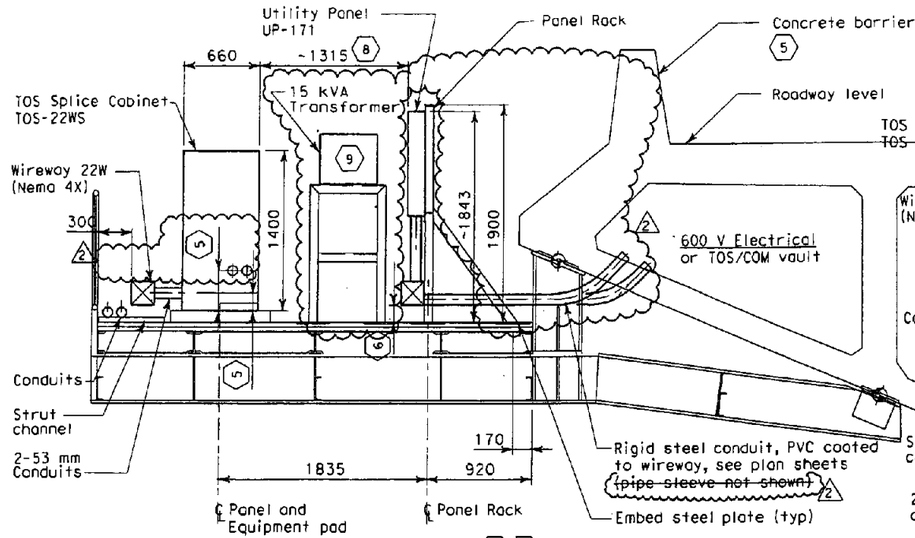

SECTION A-A
SCALE: 1:25

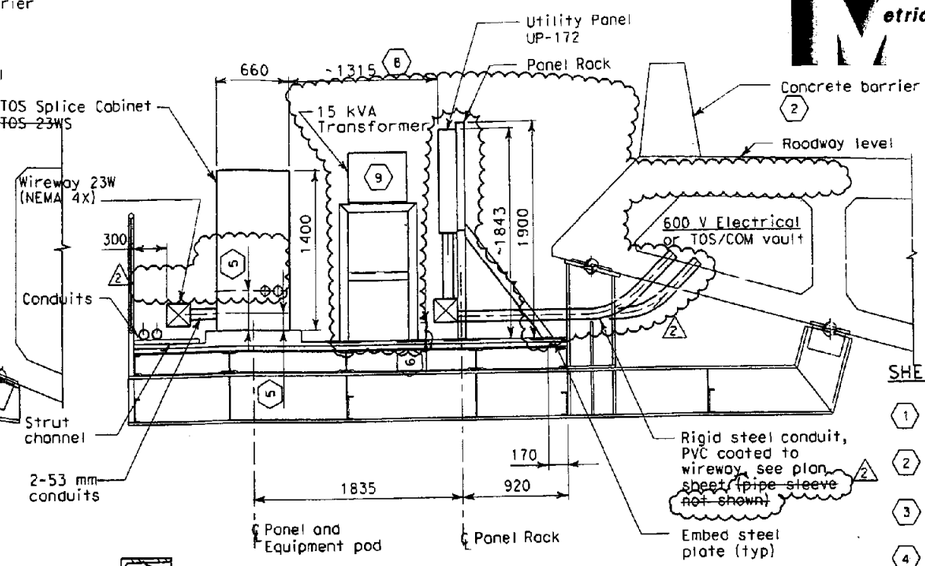

PLATFORM 23W SECTION B-B
SCALE: 1:25

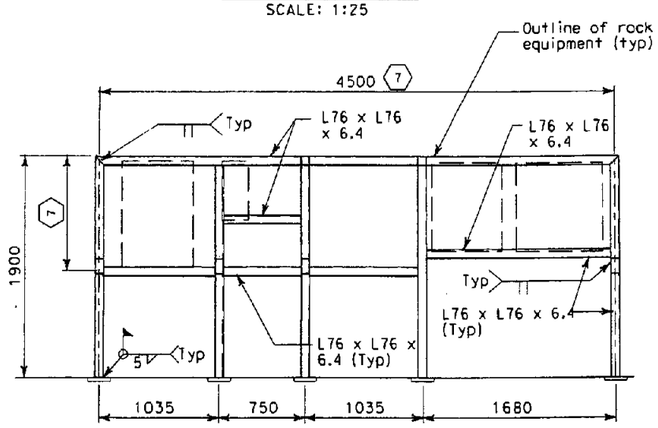

PANEL RACK ELEVATION
SCALE: 1:25

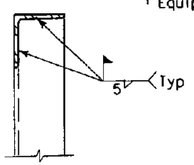

DETAIL 1
NO SCALE

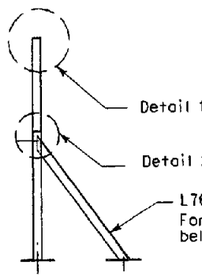

SIDE VIEW
NO SCALE

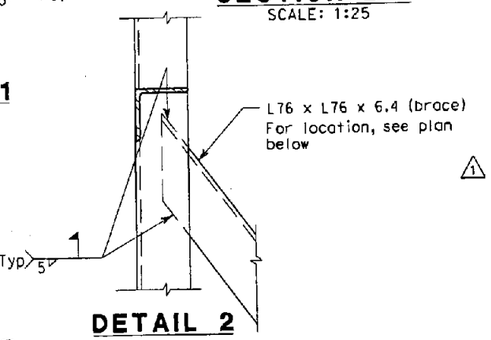

DETAIL 2
NO SCALE

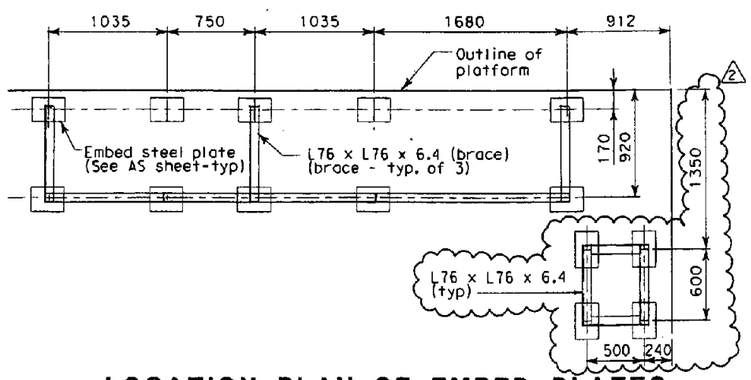

LOCATION PLAN OF EMBED PLATES
SCALE: 1:25

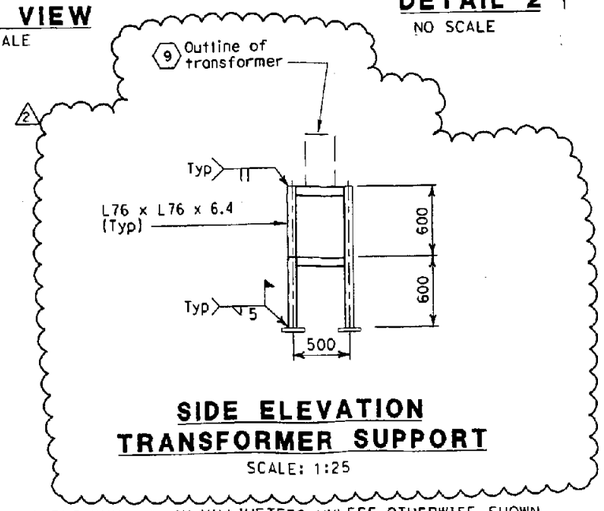

SIDE ELEVATION TRANSFORMER SUPPORT
SCALE: 1:25

ALL DIMENSIONS ARE IN MILLIMETERS UNLESS OTHERWISE SHOWN

SHEET NOTES:

1. Section A-A shown is from service platform #22W, see sheet E-20.
2. For conduit plan, barrier sections, lighting pole and TOS, see sheets E-38 thru E-39.
3. Section B-B shown is from service platform #23W, see sheet E-21.
4. Deleted
5. Centerline mounting height of wireway and conduits to equipment shall be verified by Contractor. The location shall be between the base and the lowest device mounting plate or device inside the panel.
6. Contractor to locate to suit.
7. Equipment dimensions mounted on panel rack shall be verified by Contractor prior to purchase and fabrication of panel rack.
8. To ensure that working clearances are in compliance with NEC guidelines, the Contractor shall maintain panel sizes as indicated.
9. The transformer shall be horizontally supported (floor) mounted. The Contractor shall provide (not shown) the support of the transformer to suit location.

NOTE:

1. References:
   - For equipment arrangement and conduit numbers, see service platform plans, sheets E-20 and E-21.
   - For platform locations, see roadway level plans, sheets E-11 and E-12.

MARK	DATE	DESCRIPTIONS	REV	CK	CCO NO.
2	3/13/09	Revised conduit entry to TOS splice cabinet. Added embed steel plates, XFMR support, project sheet 9. Deleted pipe sleeves. Revised sheet note 8	RSB	EJL	65 REV
1	4/30/08	Revised panel racks, panels and transformer	ECR	EJL	65

REVISIONS

REGISTERED PROFESSIONAL ENGINEER FADI WALIEDDINE No. 11465 Exp. 12/31/2009 ELECTRICAL STATE OF CALIFORNIA 1 2

CONTRACT CHANGE ORDER NO. 65
SHEET 24 OF 40 8/13/09

DETAILS
ROADWAY AND GIRDER LEVEL WESTBOUND SERVICE PLATFORM SECTIONS
SCALE AS NOTED

E-22

STATE OF CALIFORNIA - DEPARTMENT OF TRANSPORTATION
Caltrans

DESIGN OVERSIGHT: BEHZAD GOLEMOHAMMADI

CALCULATED/DESIGNED BY | CHECKED BY | FK | DATE 2/06 | REVISED BY | DATE REVISED

LAST REVISION 00-00-00 | DATE PLOTTED => 3/16/2009 | TIME PLOTTED => 10:59:09 AM

DGN FILE => T:\13103\MS\pse\OTD-Contract 1\CCO\Electrical\CCO-65\service platform\401201uo022r2.dgn

DIST	COUNTY	ROUTE	KILOMETER POST TOTAL PROJECT	SHEET No	TOTAL SHEETS
04	Ala	80	1.6/2.7	415R1	643

REGISTERED ELECTRICAL ENGINEER 05/15/06 DATE

1-29-07
PLANS APPROVAL DATE

REGISTERED PROFESSIONAL ENGINEER JENS ERLINGSSON No. 8249 Exp. 9/30/08 ELECTRICAL STATE OF CALIFORNIA

PB POWER, Inc.
A Parsons Brinckerhoff Company
303 Second St., Suite 700N
San Francisco, CA 94107-1317

The State of California or its officers or agents shall not be responsible for the accuracy or completeness of electronic copies of this plan sheet.

To get to the Caltrans web site, go to: http://www.dot.ca.gov

PULL BOXES

Location	Type	Pull Box Size (mm x mm x mm)	Enclosure Type	Nameplate Pull Box Cover	Remarks
Roadway Barrier	PB-COM			Low Voltage - Call Box	Caltrans standard PB-9A (ES-9C)
Roadway Barrier	PB-LTG			600 V - Electrical	Caltrans standard PB-9 (ES-9C)
Roadway Barrier	PB-1A	131(L) x 70(W) x 68(D)	Single Gang Box	Ckt. no. see plan dwgs	
Inside Girder Box	PB-4D	900(L) x 600(W)		1 Low Voltage - TOS Preformed Loop	Caltrans standard PB-6T (ES-8)
Service Platform	PB-2B	762(L) x 610(W) x 203(D)	NEMA 4X	Low Voltage - TOS/COM	
Pier 22L TOS/COM Box	PB-2C	305(L) x 102(W) x 102(D)	NEMA 4X	Low Voltage - TOS/COM	
Pier 22L 600 V Box	PB-2D	305(L) x 102(W) x 102(D)	NEMA 4X	600 V - Electrical	

PANEL ENCLOSURES (1)

Location	Type	Cabinet/Terminal Box Size (mm x mm x mm)	Enclosure Type	Nameplate Cabinet/Terminal Cover	Remarks
Service Platform	PB-7B	762(H) x 762(W) x 203(D)	NEMA 4X	Low Voltage - TOS/COM	For SCADA Communication Term. Box
Service Platform	PB-7C	762(H) x 508(W) x 203(D)	NEMA 4X	Caltrans Telephone	Enclosure only - For Telephone Terminal Box
Service Platform	PB-7B	762(H) x 762(W) x 203(D)	NEMA 4X	Low Voltage - TOS/COM	For SCADA Communication Term. Box
Service Platform	PB-7C	762(H) x 508(W) x 203(D)	NEMA 4X	Caltrans Telephone	Enclosure only - For Telephone Terminal Box
Service Platform	PB-8A	915(H) x 610(W) x 152(D)	NEMA 4X	See Panel Schedules	1 Panel Enclosure is PB-8A

SHEET NOTES:

(1) Panel enclosures shall have provisions for a padlock.

NOTES:

1. Roadway access covers, and access covers for precast manholes located in the roadway, shall have anti-skid surface and counter sunk mounting bolts.

MARK	DATE	DESCRIPTIONS	REV	CK	CCO NO.
1	4/30/08	Revised enclosure sizes of PB-2B, PB-7B, PB-7C, and PB-8A.	ECR	EJL	

REVISIONS

CONTRACT CHANGE ORDER NO. 65
SHEET 25 OF 40 8/13/09

REGISTERED PROFESSIONAL ENGINEER FADI WALIEDDINE No. 11465 Exp. 12/31/2009 ELECTRICAL STATE OF CALIFORNIA

DETAILS
ROADWAY AND GIRDER LEVEL WESTBOUND
TYPICAL PULL BOX SCHEDULES
NO SCALE

E-44

STATE OF CALIFORNIA - DEPARTMENT OF TRANSPORTATION
Caltrans

DESIGN OVERSIGHT
BEHZAD GOLEMOHAMMADI

CALCULATED/DESIGNED BY FK
CHECKED BY AB
DATE 2/06
REVISED BY
DATE REVISED

LAST REVISION 00-00-00
DATE PLOTTED => 5/6/2009
TIME PLOTTED => 2:04:17 PM

FOR REDUCED PLANS ORIGINAL 0 20 40 60 80

DGN FILE =>T:\13103\MS\pse\OTD-Contract 1\CCO\CCO Temp\401201uo044.dgn

DIST	COUNTY	ROUTE	KILOMETER POST TOTAL PROJECT	SHEET No	TOTAL SHEETS
04	Ala	80	1.6/2.7	416R1	643

REGISTERED ELECTRICAL ENGINEER 05/15/06 DATE

1-29-07
PLANS APPROVAL DATE

REGISTERED PROFESSIONAL ENGINEER JENS ERLINGSSON No. 8249 Exp. 9/30/08 ELECTRICAL STATE OF CALIFORNIA

PB POWER, Inc.
A Parsons Brinckerhoff Company
303 Second St., Suite 700N
San Francisco, CA 94107-1317

The State of California or its officers or agents shall not be responsible for the accuracy or completeness of electronic copies of this plan sheet.

To get to the Caltrans web site, go to: http://www.dot.ca.gov

UTILITY PANEL UP-171 (CKT #1626-2) 1 Location: OAKLAND APPROACH SERVICE PLATFORM #22W

LOAD DESCRIPTION	LTG	REC	OTH.	CB		CB	LTG	REC	OTH.	LOAD DESCRIPTION
Spare				20/1	1 A 2	20/1			20	CB156A & CB157A
Spare				20/1	3 B 4	20/1				Spare
RECEPT (2) Service Platform #22W		360		20/1	5 C 6	20/1				
Spare				20/1	7 A 8	20/1				
				20/1	9 B 10	30/1			2000	Controller Cabinet #TOS-22WA
				20/1	11 C 12	20/1				Spare
Space					13 A 14					Space 1
					15 B 16					
					17 C 18					
TOTAL VA	-	360	-				-	-	2020	TOTAL VA

LOAD SUMMARY IN VA

Lighting (At 100%): 0 VA
Gen Use (1st 10 kVA at 100% Plus 50% of remainder): 2380 VA

TOTAL kVA: 2.4 kVA
TOTAL Amperes: 6.6 A at 208 V, 3 ø

BALANCE (kVA)
Phase A - 0.020
Phase B - 2.000
Phase C - 0.360

VOLTAGE: 208/120 V
PHASE/WIRES: 3-phase,4-wire
BUS RATING: 100 A
MAIN: 60 A
MOUNTING: Surface 1
K.A.I.C.: 10

1

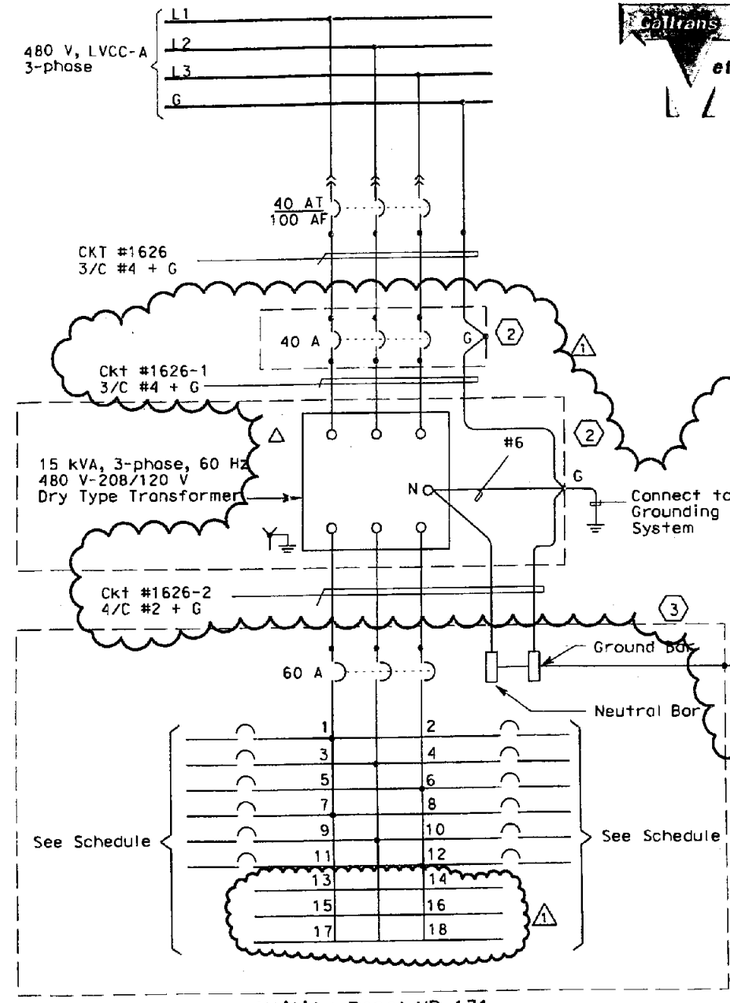

Utility Panel UP-171

SHEET NOTES:

1. Contractor shall provide Nameplates and Circuit Schedules as shown.
2. 480 V Circuit breaker, transformer, and panelboard are separate components, all NEMA 4X, stainless steel enclosures.
3. The panelboard NEMA 4X enclosure is PB-8A.

NOTE:

1. References:
   - For LVCC-A single line diagram, see sheet E-130
   - For pull box schedule, see sheet E-44
   - For service platform 22W, see sheet E-20

MARK	DATE	DESCRIPTIONS	REV	CK	CCO NO.
1	4/30/08	Replace mini-power center to individual components. Add circuit numbers.	ECR	EJL	

REVISIONS

CONTRACT CHANGE ORDER NO. 65
SHEET 26 OF 40 8/3/09

REGISTERED PROFESSIONAL ENGINEER FADI WALIEDDINE No. 11465 Exp. 12/31/2009 ELECTRICAL STATE OF CALIFORNIA

DETAILS
ROADWAY AND GIRDER LEVEL WESTBOUND
UP-171 PANEL SCHEDULE
NO SCALE

E-45

STATE OF CALIFORNIA - DEPARTMENT OF TRANSPORTATION
Caltrans

DESIGN OVERSIGHT: BEHZAD GOLEMOHAMMADI

CALCULATED/DESIGNED BY: FK | DATE: 2/06 | REVISED BY
CHECKED BY: AB | 2/06 | DATE REVISED

LAST REVISION 00-00-00
DATE PLOTTED => 5/6/2008
TIME PLOTTED => 2:04:41 PM

DGN FILE =>T:\13103\MS\pse\OTD-Contract 1\CCO\CCO Temp\401201uc045.dgn

DIST	COUNTY	ROUTE	KILOMETER POST TOTAL PROJECT	SHEET No	TOTAL SHEETS
04	Ala	80	1.6/2.7	417R1	643

REGISTERED ELECTRICAL ENGINEER 05/15/06 DATE

1-29-07
PLANS APPROVAL DATE

REGISTERED PROFESSIONAL ENGINEER JENS ERLINGSSON No. 8249 Exp. 9/30/08 ELECTRICAL STATE OF CALIFORNIA

PB POWER, Inc.
A Parsons Brinckerhoff Company
303 Second St., Suite 700N
San Francisco, CA 94107-1317

The State of California or its officers or agents shall not be responsible for the accuracy or completeness of electronic copies of this plan sheet.

To get to the Caltrans web site, go to: http://www.dot.ca.gov

UTILITY PANEL UP-172 (CKT #1627-2) 1 Location: OAKLAND APPROACH SERVICE PLATFORM #23W

LOAD DESCRIPTION	LTG	REC	OTH.	CB		CB	LTG	REC	OTH.	LOAD DESCRIPTION
Spare				20/1	1 A 2	20/1			20	CB156B & CB157B
Spare				20/1	3 B 4	20/1				Spare
RECEPT (2) Service Platform #23W		360		20/1	5 C 6	20/1				
Spare				20/1	7 A 8	20/1				
				20/1	9 B 10	30/1			2000	Controller Cabinet #TOS-23WA
				20/1	11 C 12	20/1				Spare
Space										Space 1
TOTAL VA	-	360	-				-	-	2020	TOTAL VA

LOAD SUMMARY IN VA

Lighting (At 100%): 0 VA
Gen Use (1st 10 kVA at 100% Plus 50% of remainder): 2380 VA

TOTAL KVA: 2.4 kVA
TOTAL Amperes: 6.6 A at 208 V, 3Ø

BALANCE (kVA)
Phase A - 0.020
Phase B - 2.000
Phase C - 0.360

VOLTAGE: 208/120 V
PHASE/WIRES: 3-phase,4-wire
BUS RATING: 100 A
MAIN: 60 A
MOUNTING: Surface 1
K.A.I.C.: 10

1

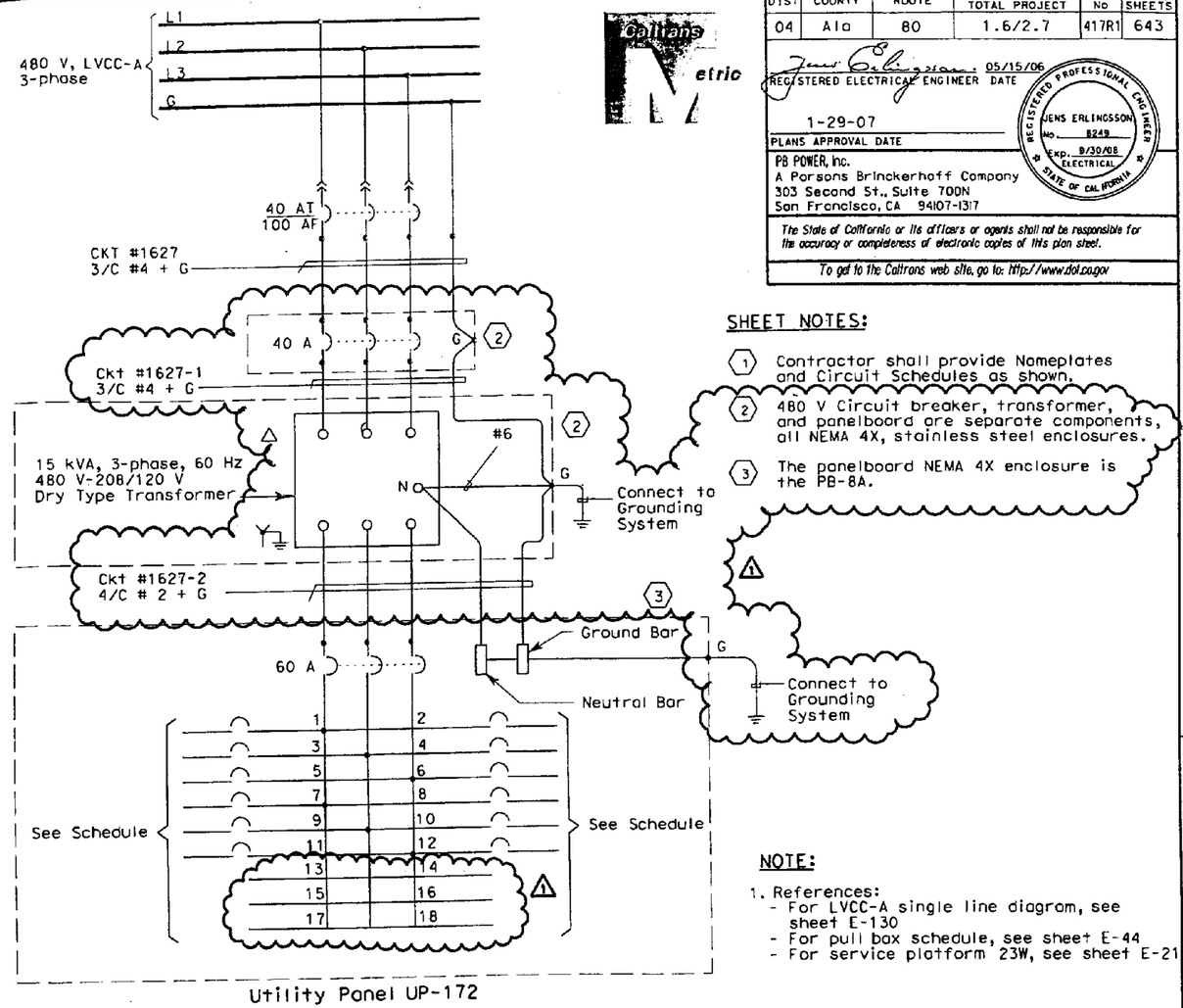

Utility Panel UP-172

SHEET NOTES:

1. Contractor shall provide Nameplates and Circuit Schedules as shown.
2. 480 V Circuit breaker, transformer, and panelboard are separate components, all NEMA 4X, stainless steel enclosures.
3. The panelboard NEMA 4X enclosure is the PB-8A.

NOTE:

1. References:
   - For LVCC-A single line diagram, see sheet E-130
   - For pull box schedule, see sheet E-44
   - For service platform 23W, see sheet E-21

MARK	DATE	DESCRIPTIONS	REV	CK	CCO NO.
1	4/30/08	Replace mini-power center to individual components. Add circuit numbers.	ECR	EJL	

REVISIONS

CONTRACT CHANGE ORDER NO. 65
SHEET 27 OF 40 8/3/09

REGISTERED PROFESSIONAL ENGINEER FADI WALIEDDINE No. 11465 Exp. 12/31/2009 ELECTRICAL STATE OF CALIFORNIA

DETAILS
ROADWAY AND GIRDER LEVEL WESTBOUND UP-172 PANEL SCHEDULE
NO SCALE

E-46

STATE OF CALIFORNIA - DEPARTMENT OF TRANSPORTATION
Caltrans
DESIGN OVERSIGHT
BEHZAD GOLEMOHAMMADI
CALCULATED/DESIGNED BY FK
CHECKED BY AB
DATE 2/06
REVISED BY
DATE REVISED

LAST REVISION 00-00-00
DATE PLOTTED => 5/6/2008
TIME PLOTTED => 2:05:09 PM

FOR REDUCED PLANS ORIGINAL 0 20 40 60 80
DGN FILE =>T:\13103\MS\pse\OTD-Contract 1\CCO\CCO Temp\401201uo046.dgn

DIST	COUNTY	ROUTE	KILOMETER POST TOTAL PROJECT	SHEET NO	TOTAL SHEETS
04	Ala	80	1.6/2.7	424 R2	643

REGISTERED ELECTRICAL ENGINEER 05/15/06 DATE

1-29-07
PLANS APPROVAL DATE

REGISTERED PROFESSIONAL ENGINEER JENS ERLINGSSON No. 8249 Exp. 9/30/08 ELECTRICAL STATE OF CALIFORNIA

PB POWER, inc.
A Parsons Brinckerhoff Company
303 Second St., Suite 700N
San Francisco, CA 94107-1317

The State of California or its officers or agents shall not be responsible for the accuracy or completeness of electronic copies of this plan sheet.

To get to the Caltrans web site, go to http://www.dot.ca.gov

Caltrans Metric

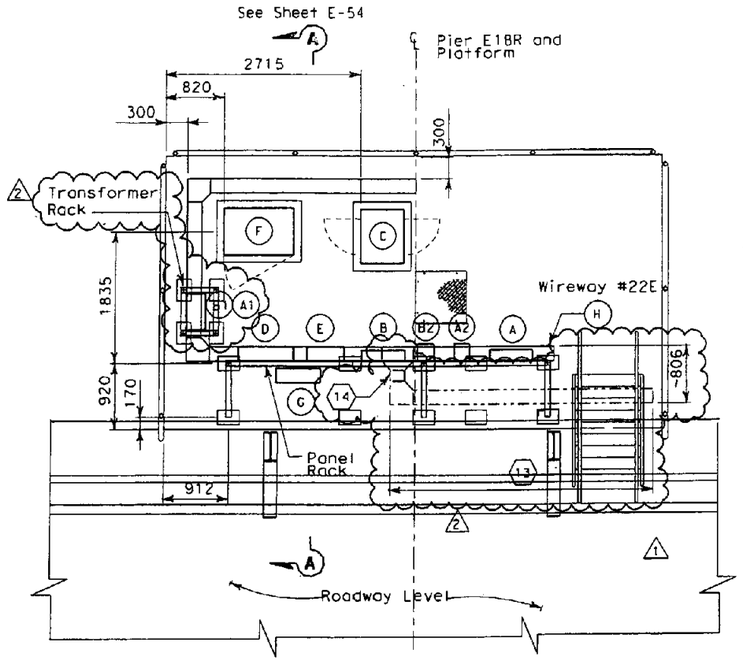

SERVICE PLATFORM #22E EQUIPMENT ARRANGEMENT PLAN (9)

SCALE: 1:40

SHEET NOTES:

(1) See sheet E-61 for continuation.

(2) For service platform grounding, use #4/0 AWG bare copper ground cables tapped from ground bars. See sheet E-74. (routed in 21c.) △2

(3) Metal and panel enclosure grounding.

(4) ~~(9) 103 mm, RGS conduit thru pipe sleeves cast in place. (TOS/COM)~~ △2

(5) ~~(5) 78 mm, RGS conduit thru pipe sleeves cast in place. (600 V)~~

(6) ~~The placement of embedded conduit shall be detailed on the Structural Plans.~~

(7) Deleted.

(8) Contractor to locate to suit. △1

(9) Equipment dimensions and sizes shall be verified by Contractor prior to installation. The arrangement are in compliance with NEC guidelines, the Contractor shall maintain panel sizes as indicated. △2

(10) Connect to transformer neutral.

(11) Conduit end shall be provided with ground bushings. Bond all conduits with #2 AWG bare copper wire, connected to the ground bar, see Detail 1, sheet E-43. △2

(12) Once the conduits are installed thru the conduit blockout, refer to structures plan sheets for details.

(13) Alternate wireway configuration, it shall be located between the panel rack support and the back of stairway riser.

(14) This fitting may be substituted with a flexible type connection to suit the space.

EQUIPMENT SCHEDULE: (9)

(A) Utility Panel UP-271
208/120 V, 3 Phase, 4 wire. (NEMA 4X).
Size: 914 H x 610 W x 152 D. (PB-8A)

(A1) 15 kVA Transformer, 3 Phase, 4 wire
480V - 208/120 V, 60 Hz. (NEMA 4X) △1
△2 Size: 441 H x 508 W x 267 D

(A2) Enclosed molded case circuit breaker, (NEMA 4X)
Size: 506 H x 225 W x 237 D

(B) Lighting Panel LP-281,
208/120 V, 3 Phase, 4 wire, (NEMA 4X),
Size: 914 H x 610 W x 152 D. (PB-8A)

(B1) 15 kVA Transformer, 3 Phase, 4 wire
480 V - 208/120 V, 60 Hz. (NEMA 4X)
△2 Size: 441 H x 508 W x 267 D

(B2) Enclosed molded case circuit breaker, Nema 4X)
Size: 506 H x 225 W x 237 D

(C) Controller Cabinet #TOS-22EA △1
Size: 1625 H x 615 W x 768 D

(D) SCADA Communication Terminal Box #COM-22E. (PB-7B)
Size: 762 H x 762 W x 203D △1

(E) Telephone Terminal Box #TEL-22E. (PB-7C)
Size: 762 H x 508 W x 203 D △1

(F) TOS splice cabinet #TOS-22ES. △1
Size: 1400 H x 980 W x 660 D.
△2 Caltrans Type P (Similar)

(G) PB-2B for TOS/COM, mounted on panel rack.
Size: 762 H x 610 W x 203 D

(H) 600V, Wireway (NEMA 4X) △1
Size: 203 H x 203 W

NOTES:

1. References:
   - For location of service platform #22E, see sheet E-49.
   - For schedule of utility panel UP-271 and lighting panel LP-281 see sheet E-78, E-79.
   - TOS equipment are shown for conduit routing only. For typical details of TOS controller and devices, see sheets starting at E-204.
   - For typical panel arrangement details of SCADA Communication Terminal Box, see sheet E-169.
   - For typical grounding details, see sheet E-75.
   - For Pull Box Schedule, see sheet E-77.
   - For typical platform sections, see Sheet E-54.
   - For conduit and cable tray schedule, see sheets starting at E-224. △1
2. Deleted

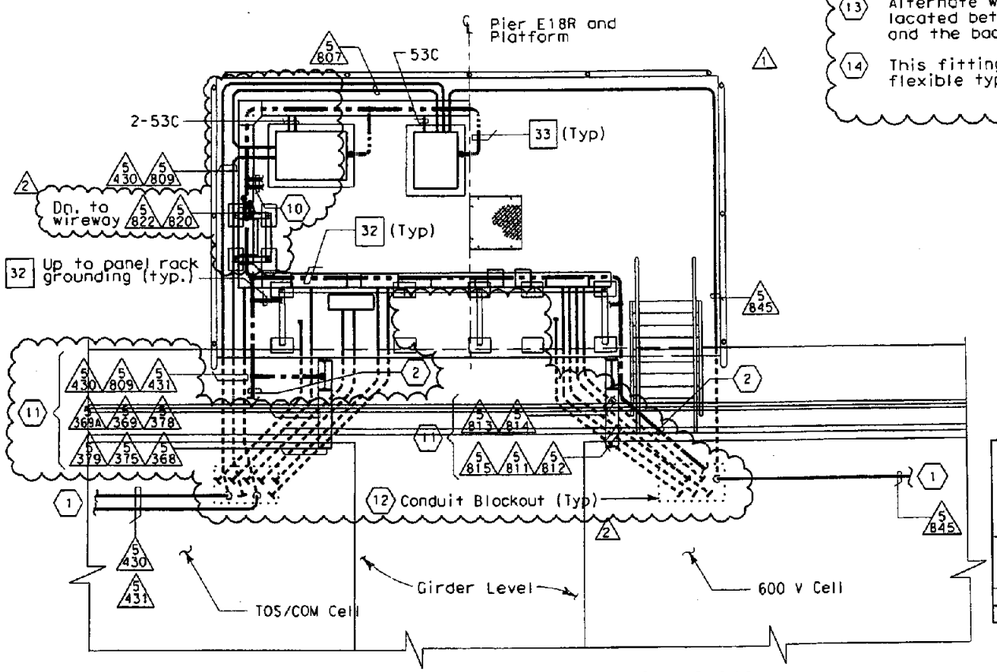

CONDUIT AND GROUNDING PLAN

SCALE: 1:40

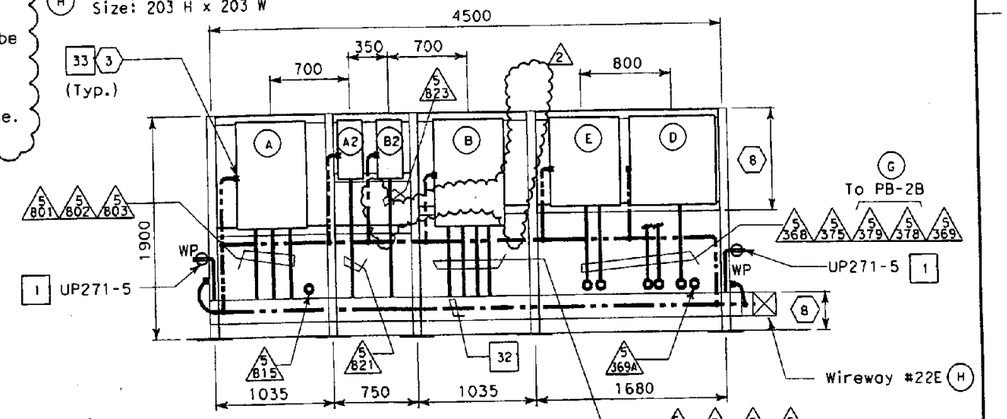

PANEL RACK ELEVATION

SCALE 1:25

MARK	DATE	DESCRIPTIONS	BY	CH'D	CCO#
2	3/13/09	Added description of equip D, sheet notes 11, 12, 13 & 14. Revised XFMR size, sheet notes 2 & 9, location, mounting, conduit entry to TOS splice cabinet and conduit locations. Deleted sheet notes 4, 5 and 6.	RSB	EJL	65 REV
1	4/30/08	Revised UP-271, LP-281, and panel racks. Change panel size of PB-7B and 7C.	ECR	EJL	65

REVISIONS

CONTRACT CHANGE ORDER NO. 65
SHEET 28 OF 40 8/3/09

REGISTERED PROFESSIONAL ENGINEER FADI WALIEDDINE No. 11465 Exp. 12/31/2009 ELECTRICAL STATE OF CALIFORNIA △1 △2

DETAILS
ROADWAY AND GIRDER LEVEL EASTBOUND SERVICE PLATFORM #22E

SCALE AS NOTED

E-53

THIS PLAN IS ACCURATE FOR ELECTRICAL WORK ONLY.

ALL DIMENSIONS ARE IN MILLIMETERS UNLESS OTHERWISE SHOWN

0 20 40 60 80

DGN FILE => T:\13103\MS\pse\OTD-Contract 1\CCO\Electrical\CCO-65 | service platform\401201ua053r2.dgn

STATE OF CALIFORNIA - DEPARTMENT OF TRANSPORTATION
Caltrans

DESIGN OVERSIGHT: BEHZAD GOLEMOHAMMADI

CALCULATED/DESIGNED BY	FK 2/06	REVISED BY
CHECKED BY	AB 2/06	DATE REVISED

LAST REVISION 00-00-00 | DATE PLOTTED => 4/17/2009 | TIME PLOTTED => 12:12:29 PM

DIST	COUNTY	ROUTE	KILOMETER POST TOTAL PROJECT	SHEET No	TOTAL SHEETS
04	Ala	80	1.6/2.7	448R1	643

REGISTERED ELECTRICAL ENGINEER 05/15/06 DATE

1-29-07
PLANS APPROVAL DATE

REGISTERED PROFESSIONAL ENGINEER JENS ERLINGSSON No. 8249 Exp. 9/30/08 ELECTRICAL STATE OF CALIFORNIA

PB POWER, Inc.
A Parsons Brinckerhoff Company
303 Second St., Suite 700N
San Francisco, CA 94107-1317

The State of California or its officers or agents shall not be responsible for the accuracy or completeness of electronic copies of this plan sheet.

To get to the Caltrans web site, go to: http://www.dot.ca.gov

Caltrans Metric

PULL BOXES

Location	Type	Pull Box Size (mm x mm x mm)	Enclosure Type	Nameplate Pull Box Cover	Remarks
Roadway Barrier	PB-COM			Low Voltage - Call Box	Caltrans standard PB-9A (ES-9C)
Roadway Barrier	PB-LTG			600 V - Electrical	Caltrans standard PB-9 (ES-9C)
Roadway Barrier	PB-1A	240 (L) x 71 (W) x 130 (D)	Two Gang Tandem Box	Ckt. no., see plan dwgs.	Receptacle box - Service platform
Bikeway	PB-1D	152 (L) x 203 (W) x 102 (D)	NEMA 4X	600 V - Electrical	
Inside Girder Box	PB-4D	900 (L) x 600 (W)		Low Voltage - TOS Preformed Loop	Caltrans standard PB-6T (ES-8)
Service Platform	PB-2B	762 (L) x 610 (W) x 203 (D) 1	NEMA 4X	Low Voltage - TOS/COM 1	

PANEL ENCLOSURES (1)

Location	Type	Cabinet/Terminal Box Size (mm x mm x mm) 1	Enclosure Type	Nameplate Cabinet/Terminal Cover	Remarks
Service Platform	PB-7B	762 (H) x 762 (W) x 203 (D)	NEMA 4X	Low Voltage - TOS/COM	For SCADA Communication Term. Box
Service Platform	PB-7C	762 (H) x 508 (W) x 203 (D)	NEMA 4X	Caltrans Telephone	Enclosure only - For Telephone Terminal Box
					1
	1				
Serrvice Platform	PB-8A	915 (H) x 610 (W) x 152 (D)	NEMA 4X	See panel Schedules	Panel enclosure is PB-8A

SHEET NOTES:

(1) Panel enclosures shall have provisions for a padlock.

NOTES:

1. Roadway access covers, and access covers for precast manholes located in the roadway, shall have anti-skid surface and counter sunk mounting bolts.

MARK	DATE	DESCRIPTIONS	REV	CK	CCO NO.
1	4/30/08	Revised enclosure sizes of PB-2B, PB-7B, PB-7C, and PB-8A.	ECR	EJL	

REVISIONS

CONTRACT CHANGE ORDER NO. 65
SHEET 30 OF 40 8/3/09

REGISTERED PROFESSIONAL ENGINEER FADI WALIEDDINE No. 11465 Exp. 12/31/2009 ELECTRICAL STATE OF CALIFORNIA

DETAILS
ROADWAY AND GIRDER LEVEL EASTBOUND TYPICAL PULL BOX SCHEDULES
NO SCALE

E-77

STATE OF CALIFORNIA - DEPARTMENT OF TRANSPORTATION
Caltrans

DESIGN OVERSIGHT
BEHZAD GOLEMOHAMMADI

CALCULATED/DESIGNED BY FK
CHECKED BY AB
DATE REVISED 2/06
REVISED BY
DATE REVISED

LAST REVISION 00-00-00
DATE PLOTTED => 5/6/2008
TIME PLOTTED => 1:57:10 PM

TOP REDUCED PLANE ORIGINAL 0 20 40 60 80 DGN FILE =>t:\13103\ms\pse\old-contract 1\cco\cco temp\401201uo077.dgn

DIST	COUNTY	ROUTE	KILOMETER POST TOTAL PROJECT	SHEET No	TOTAL SHEETS
04	Ala	80	1.6/2.7	449R1	643

REGISTERED ELECTRICAL ENGINEER 05/15/06 DATE

1-29-07
PLANS APPROVAL DATE

REGISTERED PROFESSIONAL ENGINEER JENS ERLINGSSON No. 8249 EXP. 9/30/08 ELECTRICAL STATE OF CALIFORNIA

PB POWER, Inc.
A Parsons Brinckerhoff Company
303 Second St., Suite 700N
San Francisco, CA 94107-1317

The State of California or its officers or agents shall not be responsible for the accuracy or completeness of electronic copies of this plan sheet.

To get to the Caltrans web site, go to: http://www.dot.ca.gov

Metric

UTILITY PANEL UP-271 (Ckt #2626-2) (1)

Location: OAKLAND APPROACH SERVICE PLATFORM #22E

LOAD DESCRIPTION	LTG	REC	OTH.	CB		CB	LTG	REC	OTH.	LOAD DESCRIPTION
Spare				20/1	1 A 2	20/1			30	CB-256A CB-256B & 256C
Spare				20/1	3 B 4	20/1				Spare
Recept (2) Service Platform #22E		360		20/1	5 C 6	20/1				
Spare				20/1	7 A 8	20/1				
Spare				20/1	9 B 10	30/1			2000	Controller Cabinet #TOS-22EA
Spare				20/1	11 C 12	20/1				Spare
Space					13 A 14					Space
					15 B 16					
					17 C 18					
TOTAL VA	-	360	-				-	-	2030	TOTAL VA

(1)

LOAD SUMMARY IN VA

Lighting (At 100%): 0 VA
Gen Use (1st 10 kVA at 100% Plus 50% of remainder): 2390 VA

TOTAL kVA: 2.4 kVA
TOTAL Amperes: 6.6 A at 208 V, 3 ø

BALANCE (kVA)
Phase A - 0.030
Phase B - 2.000
Phase C - 0.360

VOLTAGE: 208/120V
PHASE/WIRES: 3-phase,4-wire
BUS RATING: 100 A
~~MAIN: 60 A~~
MOUNTING: Surface (1)
K.A.I.C.: 10

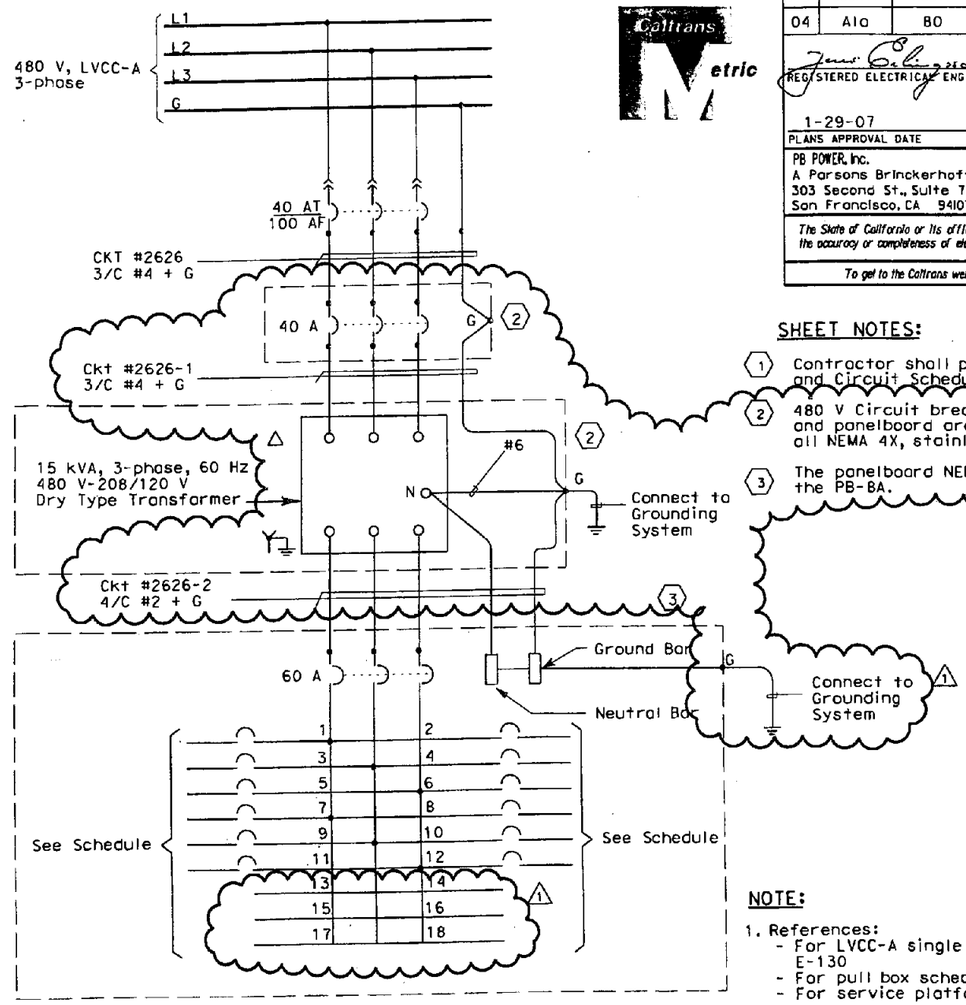

Utility Panel UP-271

SHEET NOTES:

1. Contractor shall provide Nameplates and Circuit Schedules as shown.
2. 480 V Circuit breaker, transformer, and panelboard are separate components, all NEMA 4X, stainless steel enclosures.
3. The panelboard NEMA 4X enclosure is the PB-BA.

NOTE:

1. References:
   - For LVCC-A single line diagram, see sheet E-130
   - For pull box schedule, see sheet E-44
   - For service platform 22E, see sheet E-53

MARK	DATE	DESCRIPTIONS	REV	CK	CCO NO.
1	4/30/08	Replace mini-power center to individual components. Add circuit numbers.	ECR	EJL	

REVISIONS

REGISTERED PROFESSIONAL ENGINEER FADI WALIEDDINE No. 11465 Exp. 12/31/2009 ELECTRICAL STATE OF CALIFORNIA

CONTRACT CHANGE ORDER NO. 65
SHEET 31 OF 40 8/13/09

DETAILS
ROADWAY AND GIRDER LEVEL EASTBOUND
UP-271 PANEL SCHEDULE
NO SCALE

E-78

STATE OF CALIFORNIA - DEPARTMENT OF TRANSPORTATION
Caltrans

DESIGN OVERSIGHT: BEHZAD GOLEMOHAMMADI

CALCULATED/DESIGNED BY: FK DATE 2/06 REVISED BY
CHECKED BY: AB 2/06 DATE REVISED

LAST REVISION 00-00-00
DATE PLOTTED => 5/6/2008
TIME PLOTTED => 1:57:17 PM

DIST	COUNTY	ROUTE	KILOMETER POST TOTAL PROJECT	SHEET No	TOTAL SHEETS
04	Alc	80	1.6/2.7	450R1	643

REGISTERED ELECTRICAL ENGINEER — DATE 05/15/06

1-29-07
PLANS APPROVAL DATE

REGISTERED PROFESSIONAL ENGINEER — JENS ERLINGSSON — No. 8249 — Exp. 9/30/08 — ELECTRICAL — STATE OF CALIFORNIA

PB POWER, Inc.
A Parsons Brinckerhoff Company
303 Second St., Suite 700N
San Francisco, CA 94107-1317

The State of California or its officers or agents shall not be responsible for the accuracy or completeness of electronic copies of this plan sheet.

To get to the Caltrans web site, go to: http://www.dot.ca.gov

LIGHTING PANEL LP-281 (CKT #2621-2) △1

LOCATION: OAKLAND APPROACH SERVICE PLATFORM #22E

LOAD DESCRIPTION	LTG	CB		CB	LTG	LOAD DESCRIPTION
Bikepath LTG (10)	530	20/1	1 A 2	20/1		Spare
Bikepath LTG (10)	530	20/1	3 B 4	20/1		↓
Spare		20/1	5 C 6	20/1	530	Bikepath Ltg (10)
		20/1	7 A 8	20/1	530	Bikepath Ltg (10)
		20/1	9 B 10	20/1		Spare
		20/1	11 C 12	20/1		↓
Space			13 C 14			Space
			15 C 16			↓ △1
			17 C 18			
TOTAL VA	1060				1060	TOTAL VA

LOAD SUMMARY IN VA

Lighting (AT 100%): 2120 VA

TOTAL kVA: 2.1 kVA
TOTAL Amperes: 5.9 A at 208 V, 3 ø

BALANCE (kVA)
Phase A - 1.060
Phase B - 0.530
Phase C - 0.530

VOLTAGE: 208/120 V
PHASE/WIRES: 3-phase,4-wire
BUS RATING: 100 A
MAIN: 60 A
MOUNTING: SURFACE △1
K.A.I.C.: 10

(1)

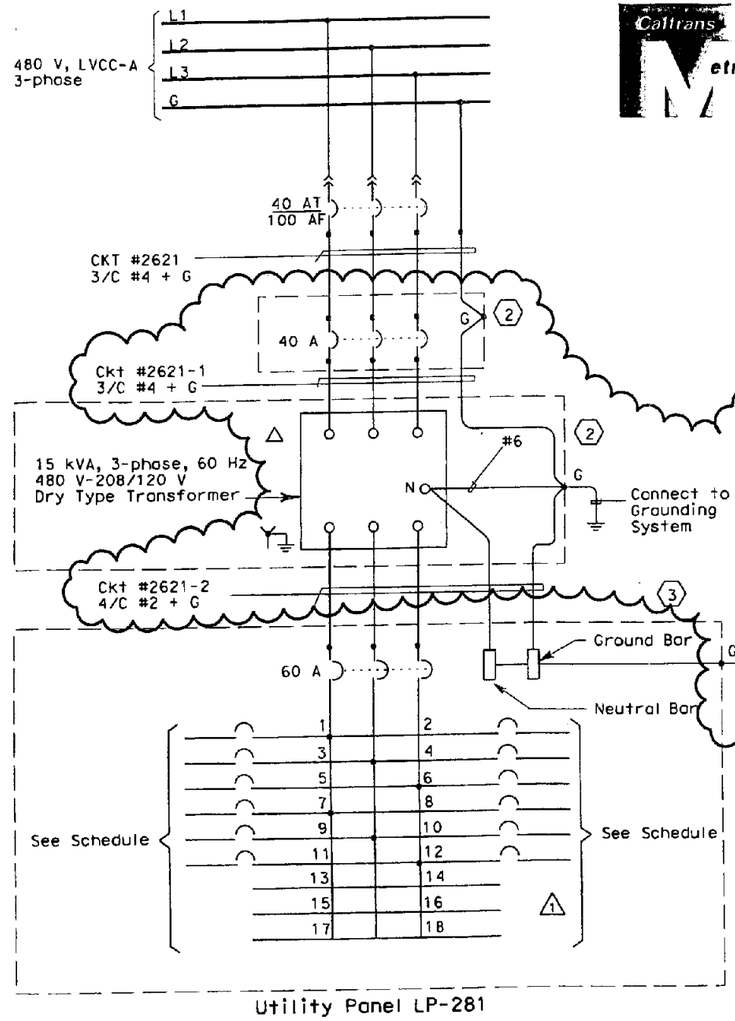

SHEET NOTES:

(1) Contractor shall provide Nameplates and Circuit Schedules as shown.

(2) 480 V Circuit breaker, transformer, and panelboard are separate components, all NEMA 4X, stainless steel enclosures.

(3) The panelboard NEMA 4X enclosure is the PB-8A.

NOTE:

1. References:
   - For LVCC-A single line diagram, see sheet E-130
   - For pull box schedule, see sheet E-44
   - For service platform 22E, see sheet E-53

MARK	DATE	DESCRIPTIONS	REV	CK	CCO NO.
△1	4/30/08	Replace mini-power center to individual components. Add circuit numbers.	ECR	EJL	

REVISIONS

REGISTERED PROFESSIONAL ENGINEER — FADI WALIEDDINE — No. 11465 — Exp. 12/31/2009 — ELECTRICAL — STATE OF CALIFORNIA

CONTRACT CHANGE ORDER NO. 65
SHEET 32 OF 40 8/3/09

DETAILS
ROADWAY AND GIRDER LEVEL EASTBOUND
LP-281 PANEL SCHEDULE
NO SCALE

E-79

STATE OF CALIFORNIA - DEPARTMENT OF TRANSPORTATION
Caltrans

DESIGN OVERSIGHT: BEHZAD GOLEMOHAMMADI

CALCULATED/DESIGNED BY: FK — DATE 2/06 — REVISED BY
CHECKED BY: AB — 2/06 — DATE REVISED

LAST REVISION 00-00-00 — DATE PLOTTED => 5/6/2008 — TIME PLOTTED => 1:57:24 PM

DGN FILE =>t:\13103\ms\pse\otd-contract 1\cco\cco temp\40120luo079.dgn

DIST	COUNTY	ROUTE	KILOMETER POST TOTAL PROJECT	SHEET No	TOTAL SHEETS
04	Ala	80	1.6/2.7	501R1	643

REGISTERED ELECTRICAL ENGINEER 05/15/06 DATE

1-29-07
PLANS APPROVAL DATE

REGISTERED PROFESSIONAL ENGINEER JENS ERLINGSSON No. 8249 Exp. 9/30/08 ELECTRICAL STATE OF CALIFORNIA

PB POWER, Inc.
A Parsons Brinckerhoff Company
303 Second St., Suite 700N
San Francisco, CA 94107-1317

The State of California or its officers or agents shall not be responsible for the accuracy or completeness of electronic copies of this plan sheet.

To get to the Caltrans web site, go to http://www.dot.ca.gov

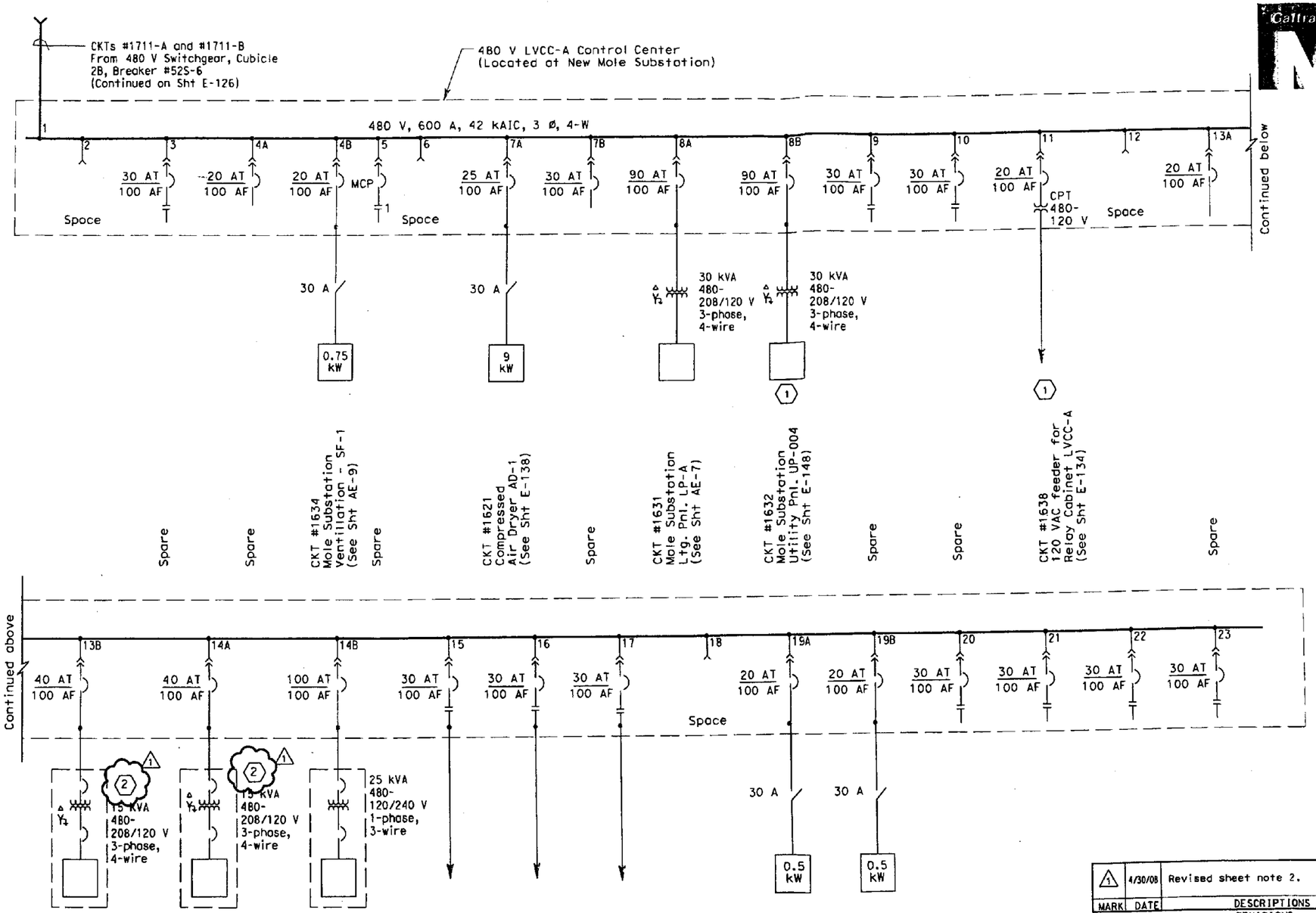

SHEET NOTES:

1. These loads are installed in this bid item. All other feeders are provided and installed under other bid items.
2. Enclosed in three separate stainless steel enclosures located on the Service Platform.

NOTES:

1. The combination starter units and thermal magnetic circuit breakers shall be suitable and coordinated for 42,000 RMS system fault current.
2. References:
   - For LVCC-A elevation and schedule, see sheet E-131.
   - For typical 480 V LVCC elementary diagrams, see sheets E-136 and E-137.
   - For circuit and conduit/ tray schedule, see sheets starting at E-224.

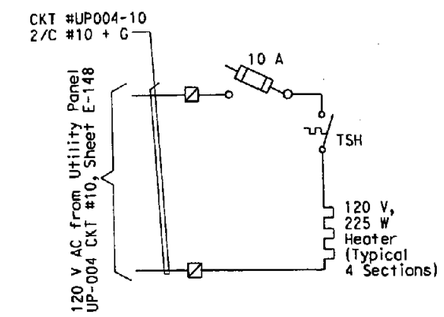

480 V LVCC-A SPACE HEATER

MARK	DATE	DESCRIPTIONS	REV	CK	CCO NO.
1	4/30/08	Revised sheet note 2.	ECR	EJL	

REVISIONS

CONTRACT CHANGE ORDER NO. 65
SHEET 33 OF 40 8/3/08

REGISTERED PROFESSIONAL ENGINEER FADI WALIEDDINE No. 11465 Exp. 12/31/2009 ELECTRICAL STATE OF CALIFORNIA

DETAILS
MOLE SUBSTATION ELECTRICAL
480 V LVCC-A SINGLE LINE DIAGRAM
NO SCALE

E-130

STATE OF CALIFORNIA - DEPARTMENT OF TRANSPORTATION
Caltrans

DESIGN OVERSIGHT: BEHZAD GOLEMOHAMMADI

CALCULATED/ DESIGNED BY	AB	DATE 2/06	REVISED BY
CHECKED BY	FK	2/06	DATE REVISED

LAST REVISION 00-00-00 | DATE PLOTTED => 5/6/2008 | TIME PLOTTED => 1:57:48 PM

DIST	COUNTY	ROUTE	KILOMETER POST TOTAL PROJECT	SHEET No	TOTAL SHEETS
04	Alo	80	1.6/2.7	535R1	643

REGISTERED ELECTRICAL ENGINEER 05/15/06 DATE

1-29-07
PLANS APPROVAL DATE

REGISTERED PROFESSIONAL ENGINEER JENS ERLINGSSON No. 8249 EXP. 9/30/08 ELECTRICAL STATE OF CALIFORNIA

PB POWER, Inc.
A Parsons Brinckerhoff Company
303 Second St., Suite 700N
San Francisco, CA 94107-1317

The State of California or its officers or agents shall not be responsible for the accuracy or completeness of electronic copies of this plan sheet.

To get to the Caltrans web site, go to: http://www.dot.ca.gov

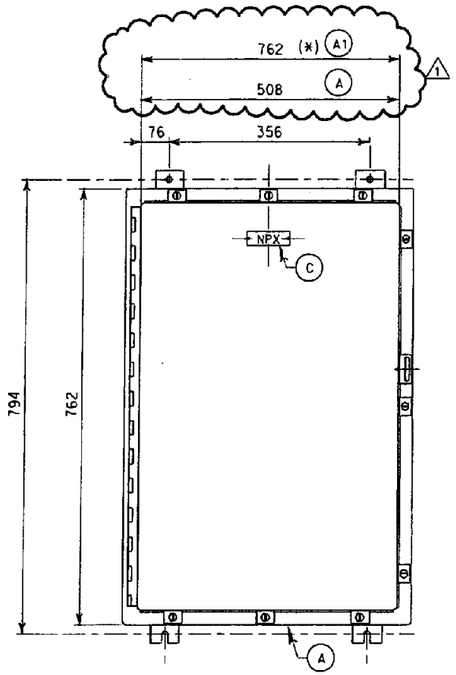

FRONT VIEW

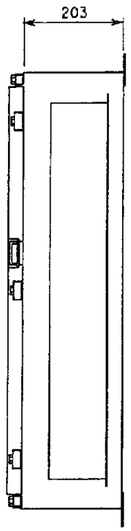

SIDE VIEW

FRONT PANEL

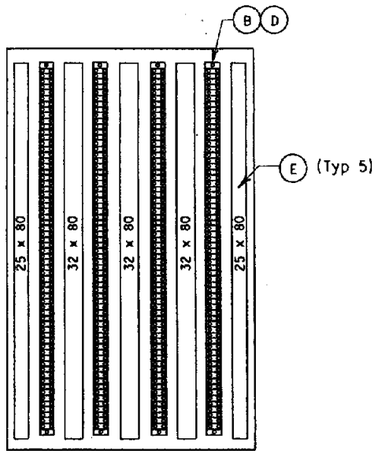

INSIDE PANEL LAYOUT

MATERIAL LIST (1)

ITEM	DESCRIPTION	QTY	
A	Enclosure, Stainless Steel Nema 4X, 762 mm x 508 mm x 203 mm, with interior panel (375 mm x 327 mm)	1	(4)
1 A1	Enclosure, Stainless Steel, NEMA 4X 762 mm x 762mm x 203, with interior panel	1	
B	65 Point terminal blocks, rated 300 V, barrier type with stop screw terminals	4	
C	Nameplate to be white lamicore with black core, size 19 mm x 80 mm, lettering to be 3 mm condensed gothic. Legend to read (see nameplate schedule below)	1	
D	Noise suppressor	50	
E	Plastic wireway, size and length as required	5	

NAMEPLATE SCHEDULE

ITEM	LINE No 1	LINE No 2 (1)	QTY	
NP1	SCADA Communication	Term. Box COM-23W (*)	1	
NP2	SCADA Communication	Term. Box COM-23E (*)	1	(3)
NP3	SCADA Communication	Term. Box COM-MOLE	1	(2)
NP4	SCADA Communication	Term. Box COM-22W (*)	1	
NP5	SCADA Communication	Term. Box COM-22E (*)	1	
NP6	Telephone System	Term. Box TEL-MOLE	1	(4)
NP7	Telephone System	Term. Box TEL-22W	1	
NP8	Telephone System	Term. Box TEL-23W	1	
NP9	Telephone System	Term. Box TEL-22E	1	
NP10	Telephone System	Term. Box TEL-23E	1	(3)

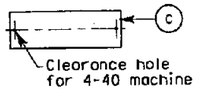

NOTE: Nameplates shall be mounted to the enclosure front panel with 4-40 stainless steel machine screws. The control panel to be drilled and tapped. (no self-tapping screws)

SHEET NOTES:

(1) Material listed are quantities for each SCADA Communication and Telephone Terminal Box.

(2) Enclosure for COM-MOLE shall be NEMA 12.

(3) (By others).

(4) TEL-MOLE shall be mounted on a backboard only.

NOTES:

1. References:
   - For SCADA Communication Terminal Box wiring diagrams, see sheets E-159 thru E-162.
   - For Telephone Terminal Box wiring diagrams, see sheets E-165 thru E-168.

MARK	DATE	DESCRIPTIONS	REV	CK	CCO NO.
1	4/30/08	Change panel enclosure size.	ECR	EJL	

REVISIONS

REGISTERED PROFESSIONAL ENGINEER FADI WALIEDDINE No. 11465 EXP. 12/31/2009 ELECTRICAL STATE OF CALIFORNIA

CONTRACT CHANGE ORDER NO. 65
SHEET 35 OF 40 8/3/09

DETAILS
SCADA REMOTE TERMINAL UNIT SYSTEM
SCADA AND TELEPHONE TERMINAL BOX LAYOUT
NO SCALE

E-164

ALL DIMENSIONS ARE IN MILLIMETERS UNLESS OTHERWISE SHOWN

FOR REDUCED PLANS ORIGINAL 0 20 40 60 80

DGN FILE =>t:\13103\ms\pse\otd-contract 1\cco\cco temp\40120lua164.dgn

STATE OF CALIFORNIA - DEPARTMENT OF TRANSPORTATION
Caltrans

DESIGN OVERSIGHT: BEHZAD GOLEMOHAMMADI

CALCULATED/DESIGNED BY	CHECKED BY	REVISED BY	DATE REVISED
FK	AB		
DATE 2/06	2/06		

LAST REVISION 00-00-00
DATE PLOTTED => 5/6/2008
TIME PLOTTED => 1:58:06 PM

DIST	COUNTY	ROUTE	KILOMETER POST TOTAL PROJECT	SHEET No	TOTAL SHEETS
04	Alo	80	1.6/2.7	580 R1	643

REGISTERED ELECTRICAL ENGINEER 05/15/06 DATE

1-29-07
PLANS APPROVAL DATE

PB POWER, Inc.
A Parsons Brinckerhoff Company
303 Second St., Suite 700N
San Francisco, CA 94107-1317

REGISTERED PROFESSIONAL ENGINEER JENS ERLINGSSON No. 8249 Exp. 9/30/08 ELECTRICAL STATE OF CALIFORNIA

The State of California or its officers or agents shall not be responsible for the accuracy or completeness of electronic copies of this plan sheet.

To get to the Caltrans web site, go to http://www.dot.ca.gov

Caltrans Metric

MARK	DATE	DESCRIPTIONS	REV	CK	CCO NO.
1	4/30/08	Revised cable number routed inside conduit #4801 and #4831	ECR	EJL	

REVISIONS

CONTRACT CHANGE ORDER NO. 65
SHEET 36 OF 40 8/3/09

REGISTERED PROFESSIONAL ENGINEER FADI WALIEDDINE No. 11465 Exp. 12/31/2009 ELECTRICAL STATE OF CALIFORNIA

CONDUIT DATA

ROADWAY AND GIRDER LEVEL WESTBOUND

Conduit No	Reference	Size	Type	Total Fill (mm²)	Allowable Fill (mm²)	Cable Area (mm²)	Included Cable No.	Conductor Type
4422	E-27	41	RGS conduit	324.29	708.28	324.29	S-1602	1-3/C+gnd #6, 600 V EPR insulation
						0.00	Pull Rope 1	Soft-Fiber Polyester
4423	E-27	41	RGS conduit	49.21	534.55	49.21	UP172-2A	2+1gnd #12,#12, 600 V, RHH/RHW insulation
						0.00	Pull Rope 1	Soft-Fiber Polyester
4424	E-15, E-27	41	RGS conduit	0.00	534.55	0.00	Pull Rope 1	Soft-Fiber Polyester
4425	E-15, E-27	41	RGS conduit	0.00	534.55	0.00	Pull Rope 1	Soft-Fiber Polyester
4430	E-15, E-28, E-30	41	RGS conduit	0.00	534.55	0.00	Pull Rope 1	Soft-Fiber Polyester
4431	E-15, E-28, E-30	41	RGS conduit	0.00	534.55	0.00	Pull Rope 1	Soft-Fiber Polyester
4432	E-14, E-26	41	RGS conduit	0.00	534.55	0.00	Pull Rope 1	Soft-Fiber Polyester
4433	E-14, E-26	41	RGS conduit	0.00	534.55	0.00	Pull Rope 1	Soft-Fiber Polyester
4434	E-14, E-26	41	RGS conduit	98.10	708.28	98.10	1803	1 - 2 pair, shielded #18 with IS/OA , 600 V, PVC
						0.00	Pull Rope 1	Soft-Fiber Polyester
4435	E-15, E-28, E-30	41	RGS conduit	98.10	708.28	98.10	1803	1 - 2 pair, shielded #18 with IS/OA , 600 V, PVC
						0.00	Pull Rope 1	Soft-Fiber Polyester
4436	E-15, E-28, E-30	41	RGS conduit	98.10	708.28	0.00	Pull Rope 1	Soft-Fiber Polyester
						98.10	1804	1 - 2 pair, shielded #18 with IS/OA , 600 V, PVC
4450	E-27, E-28, E-30	103	RGS conduit	0.00	3324.51	0.00	Pull Rope 1	Soft-Fiber Polyester
4451	E-27, E-28, E-30	103	RGS conduit	972.87	3324.51	324.29	S-1601	1-3/C+gnd #6, 600 V EPR insulation
						324.29	S-1602	1-3/C+gnd #6, 600 V EPR insulation
						0.00	Pull Rope 1	Soft-Fiber Polyester
						324.29	A-1005	1-3/C+gnd #6, 600 V EPR insulation
4452	E-27, E-28, E-30	103	RGS conduit	732.20	2576.49	366.10	1626	1-3/C+gnd #4, 600 V EPR insulation
						366.10	1627	1-3/C+gnd #4, 600 V EPR insulation
						0.00	Pull Rope 1	Soft-Fiber Polyester
4801	E-20	78	RGS-PVC coated conduit	624.31 1	1935.24	624.31	1626-2	1-4/C+gnd #2, 600 V EPR insulation 1
						0.00	Pull Rope 1	Soft-Fiber Polyester
4802	E-20	78	RGS-PVC coated conduit	0.00	1935.24	0.00	Pull Rope 1	Soft-Fiber Polyester
4803	E-20	78	RGS-PVC coated conduit	98.42	1935.24	0.00	Pull Rope 1	Soft-Fiber Polyester
						49.21	UP171-2A	2+1gnd #12,#12, 600 V, RHH/RHW insulation
						49.21	UP171-5	3-1/C #12, 600 V, RHH/RHW insulation
4804	E-20	53	RGS-PVC coated conduit	0.00	879.42	0.00	Pull Rope 1	Soft-Fiber Polyester
4805	E-20	103	RGS-PVC coated conduit	0.00	3324.51	0.00	Pull Rope 1	Soft-Fiber Polyester
4811	E-20	78	RGS-PVC coated conduit	366.10	2564.19	366.10	1626	1-3/C+gnd #4, 600 V EPR insulation
						0.00	Pull Rope 1	Soft-Fiber Polyester
4812	E-20	78	RGS-PVC coated conduit	49.21	1935.24	49.21	UP171-2A	2+1gnd #12,#12, 600 V, RHH/RHW insulation
						0.00	Pull Rope 1	Soft-Fiber Polyester
4813	E-20	78	RGS-PVC coated conduit	0.00	1935.24	0.00	Pull Rope 1	Soft-Fiber Polyester
4814	E-20	78	RGS-PVC coated conduit	0.00	1935.24	0.00	Pull Rope 1	Soft-Fiber Polyester
4831	E-21	78	RGS-PVC coated conduit	624.31 1	1935.24	0.00	Pull Rope 1	Soft-Fiber Polyester
						624.31	1627-2	1-4/C+gnd #2, 600 V EPR insulation 1
4832	E-21	78	RGS-PVC coated conduit	0.00	1935.24	0.00	Pull Rope 1	Soft-Fiber Polyester
4833	E-21	78	RGS-PVC coated conduit	98.42	1935.24	0.00	Pull Rope 1	Soft-Fiber Polyester
						49.21	UP172-2A	2+1gnd #12,#12, 600 V, RHH/RHW insulation
						49.21	UP172-5	3-1/C #12, 600 V, RHH/RHW insulation
4837	E-21	78	RGS-PVC coated conduit	0.00	1935.24	0.00	Pull Rope 1	Soft-Fiber Polyester
4841	E-21	78	RGS-PVC coated conduit	415.31	1935.24	0.00	Pull Rope 1	Soft-Fiber Polyester
						49.21	UP172-2A	2+1gnd #12,#12, 600 V, RHH/RHW insulation
						366.10	1627	1-3/C+gnd #4, 600 V EPR insulation
4842	E-21	78	RGS-PVC coated conduit	0.00	1935.24	0.00	Pull Rope 1	Soft-Fiber Polyester
4843	E-21	78	RGS-PVC coated conduit	0.00	1935.24	0.00	Pull Rope 1	Soft-Fiber Polyester
4844	E-21	78	RGS-PVC coated conduit	0.00	1935.24	0.00	Pull Rope 1	Soft-Fiber Polyester
4845	E-15, E-27, E-28, E-21	78	RGS-PVC coated conduit	0.00	1935.24	0.00	Pull Rope 1	Soft-Fiber Polyester

CONDUIT DATA

ROADWAY AND GIRDER LEVEL WESTBOUND

Conduit No	Reference	Size	Type	Total Fill (mm²)	Allowable Fill (mm²)	Cable Area (mm²)	Included Cable No.	Conductor Type
6300	E-24	103	RGS conduit	253.35	3324.51	253.35	Pull Rope 1	Soft-Fiber Polyester, 500 kcmil ground
6301	E-24	103	RGS conduit	0.00	3324.51	0.00	Pull Rope 1	Soft-Fiber Polyester
6302	E-24	103	RGS conduit	0.00	3324.51	0.00	Pull Rope 1	Soft-Fiber Polyester
6303	E-24	103	RGS conduit	0.00	3324.51	0.00	Pull Rope 1	Soft-Fiber Polyester
6304	E-24	103	RGS conduit	0.00	3324.51	0.00	Pull Rope 1	Soft-Fiber Polyester
6705	E-24	103	RGS conduit	1201.71	4404.97	1201.71	1474-24	
						0.00	Pull Rope 1	Soft-Fiber Polyester
						0.00	Pull Rope 1	Soft-Fiber Polyester
6727	E-24	103	RGS conduit	1201.71	4404.97	1201.71	1473-24	50 pair #18, shielded pairs, IS/OS shield 600 V, XLPE insul., PVC jacket
6728	E-24	103	RGS conduit	0.00	3324.51	0.00	Pull Rope 1	Soft-Fiber Polyester
6729	E-24	103	RGS conduit	0.00	3324.51	0.00	Pull Rope 1	Soft-Fiber Polyester
6731	E-24	103	RGS conduit	0.00	3324.51	0.00	Pull Rope 1	Soft-Fiber Polyester
6732	E-24	103	RGS conduit	0.00	3324.51	0.00	Pull Rope 1	Soft-Fiber Polyester
6733	E-24	103	RGS conduit	0.00	3324.51	0.00	Pull Rope 1	Soft-Fiber Polyester
6734	E-24	103	RGS conduit	0.00	3324.51	0.00	Pull Rope 1	Soft-Fiber Polyester
6725			Not used					50 pair #18, shielded pairs, IS/OS shield 600 V, XLPE insul., PVC jacket
6952	E-23	103	RGS conduit	0.00	3324.51	0.00	Pull Rope 1	Soft-Fiber Polyester
6964	E-23	103	RGS conduit	1201.71	4404.97	1201.71	1474-24	50 pair #18, shielded pairs, IS/OS shield 600 V, XLPE insul., PVC jacket
						0.00	Pull Rope 1	Soft-Fiber Polyester
6965	E-23	103	RGS conduit	1201.71	4404.97	1201.71	1473-24	50 pair #18, shielded pairs, IS/OS shield 600 V, XLPE insul., PVC jacket
						0.00	Pull Rope 1	Soft-Fiber Polyester
6966	E-23	103	RGS conduit	0.00	3324.51	0.00	Pull Rope 1	Soft-Fiber Polyester
6967	E-23	103	RGS conduit	0.00	3324.51	0.00	Pull Rope 1	Soft-Fiber Polyester
6968	E-23	103	RGS conduit	0.00	3324.51	0.00	Pull Rope 1	Soft-Fiber Polyester
6969	E-23	103	RGS conduit	0.00	3324.51	0.00	Pull Rope 1	Soft-Fiber Polyester
6970	E-23	103	RGS conduit	0.00	3324.51	0.00	Pull Rope 1	Soft-Fiber Polyester
6971	E-23	103	RGS conduit	0.00	3324.51	0.00	Pull Rope 1	Soft-Fiber Polyester
6972	E-23	103	RGS conduit	0.00	3324.51	0.00	Pull Rope 1	Soft-Fiber Polyester
6730	E-24	103	RGS conduit	0.00	3324.51	0.00	Pull Rope 1	Soft-Fiber Polyester
6714	E-24	103	RGS conduit	0.00	3324.51	0.00	Pull Rope 1	Soft-Fiber Polyester

For continuation, see next sheet.

DETAILS
CONDUIT AND TRAY SCHEDULE

E-227

STATE OF CALIFORNIA - DEPARTMENT OF TRANSPORTATION
Caltrans

DESIGN OVERSIGHT: BEHZAD GOLEMOHAMMADI

CALCULATED/DESIGNED BY: FK | CHECKED BY: AB | DATE 2/06 | REVISED BY | DATE REVISED

LAST REVISION 00-00-00 | DATE PLOTTED => 5/6/2008 | TIME PLOTTED => 1:58:32 PM

DGN FILE =>t:\13103\ms\pse\otd-contract 1\cco\cco temp\401201uo227.dgn

DIST	COUNTY	ROUTE	KILOMETER POST TOTAL PROJECT	SHEET No	TOTAL SHEETS
04	Ala	80	1.6/2.7	581 R1	643

REGISTERED ELECTRICAL ENGINEER 05/15/06 DATE

1-29-07
PLANS APPROVAL DATE

REGISTERED PROFESSIONAL ENGINEER JENS ERLINGSSON No. 8249 Exp. 9/30/08 ELECTRICAL STATE OF CALIFORNIA

PB POWER, Inc.
A Parsons Brinckerhoff Company
303 Second St., Suite 700N
San Francisco, CA 94107-1317

The State of California or its officers or agents shall not be responsible for the accuracy or completeness of electronic copies of this plan sheet.

To get to the Caltrans web site, go to http://www.dot.ca.gov

Caltrans Metric

CONDUIT DATA

ROADWAY AND GIRDER LEVEL WESTBOUND

Conduit No	Reference	Size	Type	Total Fill (mm²)	Allowable Fill (mm²)	Cable Area (mm²)	Included Cable No.	Conductor Type
6973	E-23	103	RGS conduit	0.00	3324.51	0.00	Pull Rope 1	Soft-Fiber Polyester
~~Wireway 22W~~	~~E-20 (Note 3)~~	~~203~~	~~203 mm x 203 mm wireway~~	~~464.52~~	~~8258.05~~	~~49.21~~	~~UP171-2A~~	~~2 + 1gnd #12, #12, 600V, RHH/RHW insulation~~
						~~366.10~~	~~1626~~	~~1-3/C + gnd #4, 600 V, EPR insulation~~
						~~49.21~~	~~UP171-5~~	~~3-1/C #12, 600 V, RHH/RHW insulation~~
~~Wireway 23W~~	~~E-21 (Note 3)~~	~~203~~	~~203 mm x 203 mm wireway~~	~~464.52~~	~~8258.05~~	~~49.21~~	~~UP172-2A~~	~~2 + 1 gnd #12, #12, 600 V, RHH/RHW insulation~~
						~~366.10~~	~~1627~~	~~1-3/C + gnd #4, 600 V, EPR insulation~~
						~~49.21~~	~~UP172-5~~	~~3-1/C #12, 600 V, RHH/RHW insulation~~
1T39	E-30	305	152 mm siderail ladder tray	0.00	8387.08	0.00	-	
1T41	E-30	305	152 mm siderail ladder tray	0.00	8387.08	0.00	-	
1T53	E-23	610	152 mm siderail tray	0.00	16774.16	0.00	-	
(E) 1T13	E-23 (Note 1)	150	152 mm siderail ladder					
(E) 1T24	E-23 (Note 1)	610	152 mm siderail ladder					
(E) 1T43	E-23 (Note 2)	305	152 mm siderail tray	1201.71	8387.08	1201.71	1474-24	50 pair #18, shielded pairs, overall shield 600 V, XLPE insul., PVC jacket
(E) 1T53	E-23 (Note 1)	610	152 mm siderail tray					
(E) 4979	E-23 (Note 2)	103	RGS conduit		2576.49	1201.71	1473-24	50 pair #18, shielded pairs, overall shield 600 V, XLPE insul., PVC jacket
(E) 4980	E-23 (Note 2)	103	RGS conduit		4404.97	1201.71	1474-24	50 pair #18, shielded pairs, overall shield 600 V, XLPE insul., PVC jacket
(E) 6700	E-23 (Note 1)	103	Liquidtight flex metal					
(E) 6701	E-23 (Note 1)	103	RGS conduit					
(E) 6706	E-23 (Note 1)	103	Liquidtight flex metal					
(E) 6707	E-23 (Note 1)	103	Liquidtight flex metal					
(E) 6708	E-23 (Note 1)	103	Liquidtight flex metal					
(E) 6709	E-23 (Note 1)	103	Liquidtight flex metal					
(E) 6710	E-23 (Note 1)	103	RGS conduit					
(E) 6711	E-23 (Note 1)	103	RGS conduit					
(E) 6712	E-23 (Note 1)	103	RGS conduit					
(E) 6713	E-23 (Note 1)	103	RGS conduit					
(E) 6716	E-23 (Note 2)	103	Liquidtight flex metal conduit	1201.71	4404.97	1201.71	1474-24	50 pair #18, shielded pairs, overall shield 600 V, XLPE insul., PVC jacket
(E) 6717	E-23 (Note 2)	103	Liquidtight flex metal conduit	1201.71	4404.97	1201.71	1473-24	50 pair #18, shielded pairs, overall shield 600 V, XLPE insul., PVC jacket
(E) 6718	E-23 (Note 1)	103	Liquidtight flex metal					
(E) 6719	E-23 (Note 1)	103	Liquidtight flex metal					
(E) 6720	E-23 (Note 1)	103	Liquidtight flex metal					
(E) 6721	E-23 (Note 2)	103	RGS conduit	1201.71	2576.49	1201.71	1474-24	50 pair #18, shielded pairs, overall shield 600 V, XLPE insul., PVC jacket
(E) 6722	E-23 (Note 2)	103	RGS conduit	1201.71	4404.97	1201.71	1473-24	50 pair #18, shielded pairs, overall shield 600 V, XLPE insul., PVC jacket
(E) 6723	E-23 (Note 1)	103	RGS conduit					
(E) 6724	E-23 (Note 1)	103	RGS conduit					
(E) 6725	E-23 (Note 1)	103	RGS conduit					
(E) 6936	E-23 (Note 1)	103	RGS conduit					
(E) 6937	E-23 (Note 1)	103	RGS conduit					

1

CONDUIT DATA

Conduit No	Reference	Size	Type	Total Fill (mm²)	Allowable Fill (mm²)	Cable Area (mm²)	Included Cable No.	Conductor Type
(E) 6944	E-23 (Note 1)	103	RGS conduit					
(E) 6945	E-23 (Note 1)	103	RGS conduit					
(E) 6946	E-23 (Note 1)	103	RGS conduit					
(E) 6947	E-23 (Note 1)	103	RGS conduit					
(E) 6948	E-23 (Note 1)	103	RGS conduit					
(E) 6952	E-23 (Note 1)	103	Liquidtight flex metal					
(E) 6964	E-23 (Note 2)	103	RGS conduit	1201.71	4404.97	1201.71	1474-24	50 pair #18, shielded pairs, overall shield 600 V, XLPE insul., PVC jacket
(E) 6965	E-23 (Note 2)	103	RGS conduit	1201.71	4404.97	1201.71	1473-24	50 pair #18, shielded pairs, overall shield 600 V, XLPE insul., PVC jacket
(E) 6966	E-23 (Note 1)	103	RGS conduit					
(E) 6967	E-23 (Note 1)	103	RGS conduit					
(E) 6968	E-23 (Note 1)	103	RGS conduit					
(E) 6969	E-23 (Note 1)	103	RGS conduit					
(E) 6970	E-23 (Note 1)	103	RGS conduit					
(E) 6971	E-23 (Note 1)	103	RGS conduit					
(E) 6972	E-23 (Note 1)	103	RGS conduit					
(E) 6973	E-23 (Note 1)	103	RGS conduit					
(E) 6974	E-23 (Note 1)	103	Liquidtight flex metal					
(E) 6975	E-23 (Note 1)	103	RGS conduit					

NOTES:

1. Existing conduit and cable tray shown for reference only.
2. Existing conduit and cable tray for cable routing to Skyway Structures.
3. See Sheet E-228A. 1

MARK	DATE	DESCRIPTIONS	REV	CK	CCO NO.
1	4/30/08	Revised cable number routed inside wireway 22W and 23W. Add note 3.	ECR	EJL	

REVISIONS

CONTRACT CHANGE ORDER NO. 65
SHEET 37 OF 40 8/3/09

REGISTERED PROFESSIONAL ENGINEER FADI WALIEDDINE No. 11465 Exp. 12/31/2009 ELECTRICAL STATE OF CALIFORNIA

DETAILS
CONDUIT AND TRAY SCHEDULE

E-228

STATE OF CALIFORNIA - DEPARTMENT OF TRANSPORTATION
Caltrans

DESIGN OVERSIGHT: BEHZAD GOLEMOHAMMADI

CALCULATED/DESIGNED BY: FK | CHECKED BY: AB | DATE: 2/06 | REVISED BY: | DATE REVISED:

LAST REVISION 00-00-00 | DATE PLOTTED => 5/6/2008 | TIME PLOTTED => 1:58:45 PM

DGN FILE =>t:\13103\ms\pse\otd-contract 1\cco\cco temp\401201ua228.dgn

DIST	COUNTY	ROUTE	KILOMETER POST TOTAL PROJECT	SHEET No	TOTAL SHEETS
04	Ala	80	1.6/2.7	SB1ARO	643

REGISTERED ELECTRICAL ENGINEER 4/30/08 DATE

PLANS APPROVAL DATE

REGISTERED PROFESSIONAL ENGINEER FADI WALIEDDINE NO. 11465 Exp. 12/31/2009 ELECTRICAL STATE OF CALIFORNIA

PB POWER, Inc.
A Parsons Brinckerhoff Company
303 Second St., Suite 700N
San Francisco, CA 94107-1317

The State of California or its officers or agents shall not be responsible for the accuracy or completeness of electronic copies of this plan sheet.

To get to the Caltrans web site, go to http://www.dot.ca.gov

Caltrans Metric

CONDUIT DATA

ROADWAY AND GIRDER LEVEL WESTBOUND

Conduit No	Reference	Size	Type	Total Fill (mm²)	Allowable Fill (mm²)	Cable Area (mm²)	Included Cable No.	Conductor Type
4355A	E-20	103	RGS-PVC coated	0.00	3324.51	0.00	Pull Rope 1	Soft Fiber Polyester
4356A	E-20	103	RGS-PVC coated	0.00	3324.51	0.00	Pull Rope 1	Soft Fiber Polyester
4815	E-20	103	RGS-PVC coated	0.00	3324.51	0.00	Pull Rope 1	Soft Fiber Polyester
4820	E-20	78	RGS-PVC coated	990.41	1499.81	0.00	Pull Rope 1	Soft Fiber Polyester
						366.1	1626-1	1-3/C + gnd #4, 600 V, EPR insulation
						624.31	1626-2	1-4/C + gnd #2, 600 V, EPR insulation
4821	E-20	78	RGS-PVC coated	732.20	1499.81	0.00	Pull Rope 1	Soft Fiber Polyester
						366.1	1626	1-3/C + gnd #4, 600 V, EPR insulation
						366.1	1626-1	1-3/C + gnd #4, 600 V, EPR insulation
4826	E-21	78	RGS-PVC coated	990.41	1499.81	0.00	Pull Rope 1	Soft Fiber Polyester
						366.1	1627-1	1-3/C + gnd #4, 600 V, EPR insulation
						624.31	1627-2	1-4/C + gnd #2, 600 V, EPR insulation
4827	E-21	78	RGS-PVC coated	732.32	1499.81	0.00	Pull Rope 1	Soft Fiber Polyester
						366.1	1627	1-3/C + gnd #4, 600 V, EPR insulation
						366.1	1627-1	1-3/C + gnd #4, 600 V, EPR insulation
4846	E-20	103	RGS-PVC coated	0.00	3324.51	0.00	Pull Rope 1	Soft Fiber Polyester
Wireway 22W	E-20	203	203 mm x 203 mm wireway	1566.21	8258.05	366.10	1626	1-3/C + gnd #4, 600 V, EPR insulation
						366.10	1626-1	1-3/C + gnd #4, 600 V, EPR insulation
						624.31	1626-2	1-4/C + gnd #2, 600 V, EPR insulation
						62.07	1656-1	1-3/C #16, 600 V, EPR insulation
						49.21	UP171-10	3-1/C #12, 600 V, RHH/RHW insulation
						49.21	UP171-2A	2 + 1 gnd #12, #12, 600V, RHH/RHW insulation
						49.21	UP171-5	3-1/C #12, 600 V, RHH/RHW insulation
Wireway 23W	E-21	203	203 mm x 203 mm wireway	1566.21	8258.05	366.10	1627	1-3/C + gnd #4, 600 V, EPR insulation
						366.10	1627-1	1-3/C + gnd #4, 600 V, EPR insulation
						624.31	1627-2	1-4/C + gnd #2, 600 V, EPR insulation
						62.07	1656-2	1-3/C #16, 600 V, EPR insulation
						49.21	UP172-10	3 + 1 gnd #12, 600 V, RHH/RHW insulation
						49.21	UP172-2A	2 + 1 gnd #12, 600 V, RHH/RHW insulation
						49.21	UP172-5	3-1/C #12, 600 V, RHH/RHW insulation

MARK	DATE	DESCRIPTIONS	REV	CK	CCO NO.
0	4/30/08	New drawing. Added conduit nos. 4820, 4821, 4826, 4827, 4815, 4355A, 4846, 4356A. Added cables inside wireway 22W and 23W	ECR	EJL	

REVISIONS

CONTRACT CHANGE ORDER NO. 65
SHEET 38 OF 40 8/3/09

DETAILS
CONDUIT AND TRAY SCHEDULE

E-228A

REVISED BY	DATE REVISED
ECR	EJL
DATE 4/08	5/08

CALCULATED/DESIGNED BY ECR
CHECKED BY EJL

DESIGN OVERSIGHT
BEHZAD GOLEMOHAMMADI

STATE OF CALIFORNIA - DEPARTMENT OF TRANSPORTATION
Caltrans

LAST REVISION 00-00-00
DATE PLOTTED => 5/22/2008
TIME PLOTTED => 10:21:40 AM

FOR REDUCED PLANS ORIGINAL 0 20 40 60 80

DGN FILE =>T:\13103\WS\pse\OTD-Contract 1\CCO\Electrical\CCO-service platform\401201uo228ARO.dgn

DIST	COUNTY	ROUTE	KILOMETER POST TOTAL PROJECT	SHEET NO	TOTAL SHEETS
04	Ala	80	1.6/2.7	583 R2	643

REGISTERED ELECTRICAL ENGINEER 05/15/06 DATE

1-29-07
PLANS APPROVAL DATE

REGISTERED PROFESSIONAL ENGINEER JENS ERLINGSSON No. 8249 Exp. 9/30/08 ELECTRICAL STATE OF CALIFORNIA

PB POWER, Inc.
A Parsons Brinckerhoff Company
303 Second St., Suite 700N
San Francisco, CA 94107-1317

The State of California or its officers or agents shall not be responsible for the accuracy or completeness of electronic copies of this plan sheet.

To get to the Caltrans web site, go to http://www.dot.ca.gov

Caltrans Metric

CONDUIT DATA

ROADWAY AND GIRDER LEVEL EASTBOUND

Conduit No	Reference	Size	Type	Total Fill (mm²)	Allowable Fill (mm²)	Cable Area (mm²)	Included Cable No.	Conductor Type
5345	E-61, E-62	103	RGS conduit	0.00	3324.51	0.00	Pull Rope 1	Soft-Fiber Polyester
5350	E-60, E-61	103	RGS conduit	0.00	3324.51	0.00	Pull Rope 1	Soft-Fiber Polyester
5351	E-61, E-62	103	RGS conduit	0.00	3324.51	0.00	Pull Rope 1	Soft-Fiber Polyester
5360	E-60, E-61	103	RGS conduit	0.00	3324.51	0.00	Pull Rope 1	Soft-Fiber Polyester
5361	E-61, E-62	103	RGS conduit	0.00	3324.51	0.00	Pull Rope 1	Soft-Fiber Polyester
5368	E-53, E-61	103	RGS-PVC coated conduit	0.00	3324.51	0.00	Pull Rope 1	Soft-Fiber Polyester
5369	E-53, E-61	103	RGS-PVC coated conduit	0.00	3324.51	0.00	Pull Rope 1	Soft-Fiber Polyester
5370	E-60, E-61	103	RGS conduit	0.00	3324.51	0.00	Pull Rope 1	Soft-Fiber Polyester
5371	E-61, E-62	53	RGS conduit	0.00	879.42	0.00	Pull Rope 1	Soft-Fiber Polyester
5375	E-53, E-61	103	RGS-PVC coated conduit	0.00	3324.51	0.00	Pull Rope 1	Soft-Fiber Polyester
5378	E-53, E-61	78	RGS-PVC coated conduit	0.00	1935.24	0.00	Pull Rope 1	Soft-Fiber Polyester
5379	E-53, E-61	78	RGS-PVC coated conduit	0.00	1935.24	0.00	Pull Rope 1	Soft-Fiber Polyester
5380	E-61	78	RGS conduit	0.00	1935.24	0.00	Pull Rope 1	Soft-Fiber Polyester
5382	E-61	78	RGS conduit	0.00	1935.24	0.00	Pull Rope 1	Soft-Fiber Polyester
5383	E-61	78	RGS conduit	0.00	1935.24	0.00	Pull Rope 1	Soft-Fiber Polyester
5386	E-60, E-61	78	RGS conduit	0.00	1935.24	0.00	Pull Rope 1	Soft-Fiber Polyester
5388	E-61, E-62	103	RGS conduit	0.00	3324.51	0.00	Pull Rope 1	Soft-Fiber Polyester
5390	E-52, E-62	41	RGS conduit	0.00	534.55	0.00	Pull Rope 1	Soft-Fiber Polyester
5391	E-52, E-62	41	RGS conduit	0.00	534.55	0.00	Pull Rope 1	Soft-Fiber Polyester
5392	E-52, E-62	41	RGS conduit	0.00	534.55	0.00	Pull Rope 1	Soft-Fiber Polyester
5393	E-61	78	RGS conduit	0.00	1935.24	0.00	Pull Rope 1	Soft-Fiber Polyester
5394	E-61	78	RGS conduit	0.00	1935.24	0.00	Pull Rope 1	Soft-Fiber Polyester
5396	E-61	78	RGS conduit	0.00	1935.24	0.00	Pull Rope 1	Soft-Fiber Polyester
5401	E-61	41	RGS conduit	0.00	534.55	0.00	Pull Rope 1	Soft-Fiber Polyester
5402	E-61	41	RGS conduit	0.00	534.55	0.00	Pull Rope 1	Soft-Fiber Polyester
5405	E-51, E-61	41	RGS conduit	0.00	534.55	0.00	Pull Rope 1	Soft-Fiber Polyester
5406	E-51, E-61	41	RGS conduit	0.00	534.55	0.00	Pull Rope 1	Soft-Fiber Polyester
5407	E-61, E-62	103	RGS conduit	0.00	3324.51	0.00	Pull Rope 1	Soft-Fiber Polyester
5411	E-62, E-52	41	RGS conduit	0.00	534.55	0.00	Pull Rope 1	Soft-Fiber Polyester
5412	E-62, E-52	41	RGS conduit	0.00	534.55	0.00	Pull Rope 1	Soft-Fiber Polyester
5413	E-62, E-52	41	RGS conduit	0.00	534.55	0.00	Pull Rope 1	Soft-Fiber Polyester
5416	E-61, E-62	103	RGS conduit	0.00	3324.51	0.00	Pull Rope 1	Soft-Fiber Polyester
5417	E-61, E-62	103	RGS conduit	0.00	3324.51	0.00	Pull Rope 1	Soft-Fiber Polyester
5430	E-61, E-51, E-53	41	RGS-PVC coated conduit	0.00	534.55	0.00	Pull Rope 1	Soft-Fiber Polyester
5431	E-61, E-51, E-53	41	RGS-PVC coated conduit	0.00	534.55	0.00	Pull Rope 1	Soft-Fiber Polyester
5801	E-53	78	RGS-PVC coated conduit	0.00	1935.24	0.00	Pull Rope 1	Soft-Fiber Polyester
5802	E-53	78	RGS-PVC coated conduit	△2 0.00	1935.24	0.00	Pull Rope 1	Soft-Fiber Polyester
5803	E-53	78	RGS-PVC coated conduit	0.00	1935.24	0.00	Pull Rope 1	Soft-Fiber Polyester
						~~624.31~~	~~2626-2, 1-4/C + Gnd#2, 600V EPR Insulation~~ △1	
5804	E-53	78	RGS-PVC coated conduit	△1 0.00	1935.24	0.00	Pull Rope 1	Soft-Fiber Polyester
						~~624.31~~	~~2621-2, 1-4/C + Gnd#2, 600V EPR Insulation~~ △2	
5805	E-53	78	RGS-PVC coated conduit	0.00	1935.24	0.00	Pull Rope 1	Soft-Fiber Polyester
5806	E-53	78	RGS-PVC coated conduit	0.00	1935.24	0.00	Pull Rope 1	Soft-Fiber Polyester
5807	E-53	78	RGS-PVC coated conduit	0.00	1935.24	0.00	Pull Rope 1	Soft-Fiber Polyester
5808	E-53	53	RGS-PVC coated conduit	0.00	879.42	0.00	Pull Rope 1	Soft-Fiber Polyester
5809	E-53, E-54	78	RGS-PVC coated conduit	0.00	1935.24	0.00	Pull Rope 1	Soft-Fiber Polyester

CONDUIT DATA

ROADWAY AND GIRDER LEVEL EASTBOUND

Conduit No	Reference	Size	Type	Total Fill (mm²)	Allowable Fill (mm²)	Cable Area (mm²)	Included Cable No.	Conductor Type
5810	E-53	78	RGS-PVC coated conduit	.00	1935.24	0.00	Pull Rope 1	Soft-Fiber Polyester
5811	E-53, E-61	78	RGS-PVC coated conduit	0.00	1935.24	0.00	Pull Rope 1	Soft-Fiber Polyester
5812	E-53, E-61	78	RGS-PVC coated conduit	0.00	1935.24	0.00	Pull Rope 1	Soft-Fiber Polyester
5813	E-53, E-61	78	RGS-PVC coated conduit	0.00	1935.24	0.00	Pull Rope 1	Soft-Fiber Polyester
5814	E-53, E-61	78	RGS-PVC coated conduit	0.00	1935.24	0.00	Pull Rope 1	Soft-Fiber Polyester
5845	E-53, E-61	78	RGS-PVC coated conduit	0.00	1935.24	0.00	Pull Rope 1	Soft-Fiber Polyester
5940	E-60	103	RGS conduit	0.00	3324.51	0.00	Pull Rope 1	Soft-Fiber Polyester
5941	E-60	103	RGS conduit	0.00	3324.51	0.00	Pull Rope 1	Soft-Fiber Polyester
5942	E-60	103	RGS conduit	0.00	3324.51	0.00	Pull Rope 1	Soft-Fiber Polyester
5943	E-60	103	RGS conduit	0.00	3324.51	0.00	Pull Rope 1	Soft-Fiber Polyester
5944	E-60	103	RGS conduit	0.00	3324.51	0.00	Pull Rope 1	Soft-Fiber Polyester
5950	E-60	103	RGS conduit	0.00	3324.51	0.00	Pull Rope 1	Soft-Fiber Polyester
5951	E-60	103	RGS conduit	0.00	3324.51	0.00	Pull Rope 1	Soft-Fiber Polyester
5952	E-60	103	RGS conduit	0.00	3324.51	0.00	Pull Rope 1	Soft-Fiber Polyester
5953	E-60	103	RGS conduit	0.00	3324.51	0.00	Pull Rope 1	Soft-Fiber Polyester
5954	E-60	103	RGS conduit	0.00	3324.51	0.00	Pull Rope 1	Soft-Fiber Polyester
7675	E-59	103	RGS conduit	0.00	3324.51	0.00	Pull Rope 1	Soft-Fiber Polyester
7676	E-59	103	RGS conduit	0.00	3324.51	0.00	Pull Rope 1	Soft-Fiber Polyester
7678	E-59	103	RGS conduit	0.00	3324.51	0.00	Pull Rope 1	Soft-Fiber Polyester
7679	E-59	103	RGS conduit	0.00	3324.51	0.00	Pull Rope 1	Soft-Fiber Polyester
7680	E-59	103	RGS conduit	0.00	3324.51	0.00	Pull Rope 1	Soft-Fiber Polyester
7685	E-59	103	RGS conduit	0.00	3324.51	0.00	Pull Rope 1	Soft-Fiber Polyester
7690	E-59	103	RGS conduit	0.00	3324.51	0.00	Pull Rope 1	Soft-Fiber Polyester
7691	E-59	103	RGS conduit	0.00	3324.51	0.00	Pull Rope 1	Soft-Fiber Polyester
7692	E-59	103	RGS conduit	0.00	3324.51	0.00	Pull Rope 1	Soft-Fiber Polyester
Wireway 22E	E-53 (Note 1)	~~203~~	~~203 mm x 203 mm wireway~~	~~0.00~~	~~8258.05~~	~~0.00~~		△1

For continuation, see next sheet.

MARK	DATE	DESCRIPTIONS	REV	CK	CCO NO.
△2	3/13/09	Deleted ckt 2626-2, 2621-2 routed inside conduits 5803 and 5804.	RSB	EJL	65 REV
△1	4/30/08	Revised cable number routed inside conduit #5803 and 5804. Added note 1.	ECR	EJL	65

REVISIONS

NOTE:

1. See Sheet E-230A. △1

REGISTERED PROFESSIONAL ENGINEER FADI WALIEDDINE No. 11465 Exp. 12/31/2009 ELECTRICAL STATE OF CALIFORNIA △1 △2

CONTRACT CHANGE ORDER NO. 65
SHEET 39 OF 40 8/13/09

DETAILS
CONDUIT AND TRAY SCHEDULE

E-230

STATE OF CALIFORNIA - DEPARTMENT OF TRANSPORTATION
Caltrans

DESIGN OVERSIGHT
BEHZAD GOLEMOHAMMADI

DATE	FK	CALCULATED/DESIGNED BY	CHECKED BY	REVISED BY	DATE REVISED
2/06	AB				

LAST REVISION 00-00-00
DATE PLOTTED => 3/16/2009
TIME PLOTTED => 11:01:08 AM

DGN FILE =>T:\13103\MS\pse\OTD-Contract 1\CCO\Electrical\CCO-65 service platform\40120lua230r2.dgn

DIST	COUNTY	ROUTE	KILOMETER POST TOTAL PROJECT	SHEET NO	TOTAL SHEETS
04	Ala	80	1.6/2.7	583A R1	643

REGISTERED ELECTRICAL ENGINEER 4/30/08 DATE

PLANS APPROVAL DATE

REGISTERED PROFESSIONAL ENGINEER ADI WALIEDDINE No. 11465 Exp. 12/31/2009 ELECTRICAL STATE OF CALIFORNIA

PB POWER, Inc.
A Parsons Brinckerhoff Company
303 Second St., Suite 700N
San Francisco, CA 94107-1317

The State of California or its officers or agents shall not be responsible for the accuracy or completeness of electronic copies of this plan sheet.

To get to the Caltrans web site, go to http://www.dot.ca.gov

CONDUIT DATA

ROADWAY AND GIRDER LEVEL EASTBOUND

Conduit No	Reference	Size	Type	Total Fill (mm²)	Allowable Fill (mm²)	Cable Area (mm²)	Included Cable No.	Conductor Type
5369A	E-53	103	RGS-PVC coated conduit	0.00	3324.51	0.00	Pull Rope 1	Soft Fiber Polyester
5815	E-53	103	RGS-PVC coated conduit	0.00	3324.51	0.00	Pull Rope 1	Soft Fiber Polyester
5820	E-53	78	RGS-PVC coated conduit	0.00	1499.81	0.00	Pull Rope 1	Soft Fiber Polyester (1)
						~~366.1~~	~~2626-1~~	~~1-3/C + gnd #4, 600 V, EPR insulation~~
						~~624.31~~	~~2626-2~~	~~1-4/C + gnd #2, 600 V, EPR insulation~~
5821	E-53	78	RGS-PVC coated conduit (1)	0.00	1499.81	~~0.00~~	~~Pull Rope 1~~	~~Soft Fiber Polyester~~ (1)
						~~366.1~~	~~2626~~	~~1-3/C + gnd #4, 600 V, EPR insulation~~
						~~366.1~~	~~2626-1~~	~~1-3/C + gnd #4, 600 V, EPR insulation~~
5822	E-53	78	RGS-PVC coated conduit	0.00	1935.24	0.00	Pull Rope 1	Soft Fiber Polyester (1)
						~~366.1~~	~~2621-1~~	~~1-3/C + gnd #4, 600 V, EPR insulation~~
						~~624.31~~	~~2621-2~~	~~1-4/C + gnd #2, 600 V, EPR insulation~~
5823	E-53	78	RGS-PVC coated conduit	0.00	1499.81	0.00	Pull Rope 1	Soft Fiber Polyester (1)
						~~366.1~~	~~2621~~	~~1-3/C + gnd #4, 600 V, EPR insulation~~
						~~366.1~~	~~2621-1~~	~~1-3/C + gnd #4, 600 V, EPR insulation~~
Wireway 22E	E-53	203	203 mm x 203 mm wireway	0.00	8258.05	~~366.1~~	~~2621~~	~~1-3/C + gnd #4, 600 V, EPR insulation~~
						~~366.1~~	~~2621-1~~	~~1-3/C + gnd #4, 600 V, EPR insulation~~
						~~366.1~~	~~2626~~	~~1-3/C + gnd #4, 600 V, EPR insulation~~
						~~62.07~~	~~2656-1~~	~~1-3/C #16, 600 V, EPR insulation~~
						~~133.19~~	~~LP281-2/4~~	~~3 + 1 gnd #8, #10 600 V, RHH/RHW insulation~~
						~~49.21~~	~~UP271-10~~	~~3-1/C #12, 600 V, RHH/RHW insulation~~
						~~49.21~~	~~UP271-2~~	~~2 + 1 gnd #12, #12 600 V RHH/RHW insulation~~
						~~227.46~~	~~UP271-5~~	~~1-2/C + gnd #8, 600 V, EPR insulation~~

MARK	DATE	DESCRIPTIONS	REV	CK	CCO NO.
1	3/13/09	Deleted ckt 2626-1, 2626-2, 2626, 2621-1, 2621-2, 2621 routed inside conduit 5820, 5821, 5822, 5823 and all cables routed inside wireway 22E.	RSB	EJL	65 REV
0	4/30/08	New drawing. Add conduit nos. 5815, 5820, 5821, 5822, 5823 and 5369A. Added cables inside wireway 22E.	ECR	EJL	65

REVISIONS

CONTRACT CHANGE ORDER NO. 65
SHEET 40 OF 40 8/3/09

DETAILS
CONDUIT AND TRAY SCHEDULE

E-230A

DATE	REVISED BY	DATE REVISED
4/08	ECR	5/08 EJL

CALCULATED/DESIGNED BY
CHECKED BY

DESIGN OVERSIGHT
BEHZAD GOLEMOHAMMADI

STATE OF CALIFORNIA - DEPARTMENT OF TRANSPORTATION
Caltrans

LAST REVISION 00-00-00
DATE PLOTTED => 3/17/2009
TIME PLOTTED => 11:12:17 AM

STATE OF CALIFORNIA - DEPARTMENT OF TRANSPORTATION

CONTRACT CHANGE ORDER MEMORANDUM

TO: AMER BATA / BEN GHAFGHAZI

FROM: BEN GHAFGHAZI

FILE: **E.A.** 04 - 0120L4
CO-RTE-PM ALA-80-1.6/2.7
FED. NO. NO FED AID

CCO#: **65** SUPPLEMENT#: **0** Category Code: **CBPC**

CONTINGENCY BALANCE (incl. this change) **$5,818,733.20**

COST: **$267,963.00** INCREASE ☑ DECREASE ☐

HEADQUARTERS APPROVAL REQUIRED? ☑ YES ☐ NO

SUPPLEMENTAL FUNDS PROVIDED: **$100,000.00**

IS THIS REQUEST IN ACCORDANCE WITH ENVIRONMENTAL DOCUMENTS? ☑ YES ☐ NO

CCO DESCRIPTION:
Service platform electrical changes.

PROJECT DESCRIPTION:
Construct bridge, roadway, building and electrical system.

Original Contract Time:	Time Adj. This Change:	Previously Approved CCO Time Adjustments:	Percentage Time Adjusted: (including this change)	Total # of Unreconciled Deferred Time CCO(s): (including this change)
810 Day(s)	**DEF** Day(s)	**184** Day(s)	**23** %	**10**

THIS CHANGE ORDER PROVIDES FOR:
Revising service platform electrical work as follows:

1) Revise Section 10-3.23, "Mole Substation Electrical," of the Special Provisions to include service platforms and address changes in enclosures.

2) Revise layout of electrical panel enclosures on service platforms 22W, 23W and 22E.

3) Revise Utility Panels UP-171, UP-172, UP-271, and Lightning Panel, LP-281 from a single enclosure to three separate enclosures. Revise size of SCADA panel enclosure.

4) Change panel enclosures from fiberglass to stainless steel.

5) Revise panel racks and associated conduit and cables.

This change is necessary address issues with service platforms discovered on the Skyway contract (04-012024) that were not incorporated in this contract prior to bid. The service platform electrical work was not included in Section 10-3.23, which addresses electrical components being installed on the service platform. The layout is being revised to improve functionality of the platform and address space limitations. Utility and lighting panel enclosures are being changed from one enclosure to three to improve the platform layout. Utility, lighting, and SCADA panel enclosures are being revised because the original enclosures were inadequately sized for the components being installed and to allow for future expansion of the panels. The enclosures are being changed to stainless steel due corrosion concerns. Panel racks need to be revised to accommodate the added weight of the revised panels. Conduits and cable layouts are being modified to accommodate the various panel changes.

This work is not adequately covered under any contract items therefore it will be paid as extra work at agreed lump sum for $267,963.00. A detailed cost analysis has been performed and is on file at the Resident Engineer's office. This CCO can be financed from a combination of supplemental funds of $100,000.00 provided for this work and the contingency fund.

This work has been requested by Jaime Gutierrez of Project Development (memos attached). This change has been discussed and concurred with Parviz Boozarpour of Electrical Design; Rene Forteleza of Electrical Maintenance; Mike Forner, SFOBB Construction Manager; Patrick Treacy, Headquarters Construction Coordinator; and Ken Terpstra, Project Manger. An Issue and Approve was granted by Headquarters on September 3, 2009.

Adjustment of contract time is deferred pending completion of the work specified in this change as it may affect the controlling operation. Determination of a commensurate time extension will be made in accordance with Section 10-1.14, "Progress Schedule (Critical Path Method)," of the Special Provisions and Section 8-1.07, "Liquidated Damages," of the Standard Specifications.

ADA Notice: For individuals with sensory disabilities, this document is available in alternate formats. For information call: (916) 654-6410 or TDD (916) 654-3880 or write Records and Forms Management, 1120 N Street, MS-89, Sacramento, CA 95814.

CONCURRED BY:			
Construction Engineer:	Ben Ghafghazi	Date	9/9/09
Bridge Engineer:		Date	
Project Engineer:	Jaime Gutierrez	Date	7/9/08
Project Manager:	Ken Terprstra	Date	8/4/09
FHWA Rep.:		Date	
Environmental:		Date	
Other (specify):	Parviz Boozarpour, Elec. Design	Date	7/9/08
Other (specify):	Rene Forteleza, Electrical Maint.	Date	6/2/09
District Prior Approval By:	Mike Forner, Principal TE	Date	8/4/09
HQ (Issue Approve) By:	Bob Molera	Date	9/3/09
Resident Engineer's Signature:		Date	

ESTIMATE OF COST

	THIS REQUEST	TOTAL TO DATE
ITEMS	$0.00	$0.00
FORCE ACCOUNT	$0.00	$0.00
AGREED PRICE	$267,963.00	$267,963.00
ADJUSTMENT	$0.00	$0.00
TOTAL	$267,963.00	$267,963.00

FEDERAL PARTICIPATION

☐ PARTICIPATING ☐ PARTICIPATING IN PART ☑ NONE
☐ NON-PARTICIPATING (MAINTENANCE) ☐ NON-PARTICIPATING

FEDERAL SEGREGATION (if more than one Funding Source or P.I.P. type)
☑ CCO FUNDED PER CONTRACT ☐ CCO FUNDED AS FOLLOWS

FEDERAL FUNDING SOURCE	PERCENT

ADA Notice: For individuals with sensory disabilities, this document is available in alternate formats. For information call: (916) 654-6410 or TDD (916) 654-3880 or write Records and Forms Management, 1120 N Street, MS-89, Sacramento, CA 95814.

STATE OF CALIFORNIA - DEPARTMENT OF TRANSPORTATION

CONTRACT CHANGE ORDER MEMORANDUM

TO: AMER BATA / BEN GHAFGHAZI	FILE: **E.A.** 04 - 0120L4
FROM: BEN GHAFGHAZI	**CO-RTE-PM** ALA-80-1.6/2.7
	FED. NO. NO FED AID
CCO#: **65** SUPPLEMENT#: **1** Category Code: **CBPC**	CONTINGENCY BALANCE (incl. this change) **$1,860,034.40**
COST: **$101,094.50** INCREASE ☑ DECREASE ☐	HEADQUARTERS APPROVAL REQUIRED? ☑ YES ☐ NO
SUPPLEMENTAL FUNDS PROVIDED: **$0.00**	IS THIS REQUEST IN ACCORDANCE WITH ENVIRONMENTAL DOCUMENTS? ☑ YES ☐ NO
CCO DESCRIPTION: Service Platform Electrical Changes	**PROJECT DESCRIPTION:** Construct bridge, roadway, building and electrical system.

Original Contract Time:	Time Adj. This Change:	Previously Approved CCO Time Adjustments:	Percentage Time Adjusted: (including this change)	Total # of Unreconciled Deferred Time CCO(s): (including this change)
810 Day(s)	**0** Day(s)	**184** Day(s)	**23** %	**4**

THIS CHANGE ORDER PROVIDES FOR:

Compensating the contractor for the service platform-related electrical changes, as described below.

1) Extend wireways and their supports, on service platforms 18R, 18L and 21L, shown on contract plan sheets 391R2, 392R2 and 393R1 of 643. This change is necessary to accommodate additional equipment that are planned to be installed in the future, on these service platforms. This item of the change order was requested by Electrical Maintenance.

2) Furnish and install Type 4 conduits from service platforms to bridge cells, in lieu of rigid galvanized steel (RGS) conduits. Type 4 conduits are liquid-tight conduits specified in Section 86-2.05 "CONDUIT" of the Standard Specifications. This change is necessary because RGS conduits cannot be installed at this location due to space constraints. The same issue was discovered in the Skyway contract (04-012024), but was not incorporated in this contract prior to bid. This item of the change order was requested by Electrical Design.

3) Modify the bracing of TOS cabinets, as directed by the Engineer. This change is necessary to resolve the conflict between wireway cover and brace. This item of the change order was requested by Electrical Design.

This work will be paid as Extra Work at Agreed Lump Sum of $81,094.50, and Extra Work at Force Account for an estimated price of $20,000.00. Total cost of this CCO is $101,094.50.00, which can be financed from the contingency fund. A detailed cost analysis has been submitted by the contractor, and was verified as reasonable by the Engineer.

This change has been discussed and concurred with Jaime Gutierrez of Project Development; Parviz Boozarpour of Electrical Design; Rene Forteleza of Electrical Maintenance; Mike Forner, SFOBB Construction Manager; Patrick Treacy, Headquarters Construction Coordinator; and Ken Terpstra, Project Manger. An Issue and Approve was granted by Headquarters on 05/12/2010.

No adjustment of contract time is warranted as this change does not affect the controlling operation.

ADA Notice: For individuals with sensory disabilities, this document is available in alternate formats. For information call: (916) 654-6410 or TDD (916) 654-3880 or write Records and Forms Management, 1120 N Street, MS-89, Sacramento, CA 95814.

CONCURRED BY:			
Construction Engineer:	Ben Ghafghazi	Date	5/7/2010
Bridge Engineer:		Date	
Project Engineer:	Jaime Gutierrez	Date	4/13/10
Project Manager:	Ken Terprstra	Date	4/13/10
FHWA Rep.:		Date	
Environmental:		Date	
Other (specify):	Rene Fortaleza, Elec. Maint.	Date	4/13/10
Other (specify):	Parviz Boozarpour, Elec. Design	Date	4/13/10
District Prior Approval By:		Date	
HQ (Issue Approve) By:	Larry Salhaney, HQ Const.	Date	5/12/20
Resident Engineer's Signature:		Date	5/7/2010

ESTIMATE OF COST

	THIS REQUEST	TOTAL TO DATE
ITEMS	$0.00	$0.00
FORCE ACCOUNT	$20,000.00	$20,000.00
AGREED PRICE	$81,094.50	$349,057.50
ADJUSTMENT	$0.00	$0.00
TOTAL	$101,094.50	$369,057.50

FEDERAL PARTICIPATION

☐ PARTICIPATING ☐ PARTICIPATING IN PART ☑ NONE
☐ NON-PARTICIPATING (MAINTENANCE) ☐ NON-PARTICIPATING

FEDERAL SEGREGATION (if more than one Funding Source or P.I.P. type)
☑ CCO FUNDED PER CONTRACT ☐ CCO FUNDED AS FOLLOWS

FEDERAL FUNDING SOURCE	PERCENT

ADA Notice: For individuals with sensory disabilities, this document is available in alternate formats. For information call: (916) 654-6410 or TDD (916) 654-3880 or write Records and Forms Management, 1120 N Street, MS-89, Sacramento, CA 95814.

STATE OF CALIFORNIA - DEPARTMENT OF TRANSPORTATION

CONTRACT CHANGE ORDER

Change Requested by: Engineer

CCO: 65	Suppl. No. 1	Contract No. 04 - 0120L4	Road ALA-80-1.6/2.7	FED. AID LOC.: NO FED AID

To: **M C M CONSTRUCTION INC**

You are directed to make the following changes from the plans and specifications or do the following described work not included in the plans and specifications for this contract. ***NOTE: This change order is not effective until approved by the Engineer.***

Description of work to be done, estimate of quantities and prices to be paid. (Segregate between additional work at contract price, agreed price and force account.) Unless otherwise stated, rates for rental of equipment cover only such time as equipment is actually used and no allowance will be made for idle time. This last percentage shown is the net accumulated increase or decrease from the original quantity in the Engineer's Estimate.

Extra Work at Force Account:

Provide labor, equipment and materials for modifying bracing of TOS cabinets to resolve conflict between wire-way cover and brace. All work shall be performed in accordance with Section 10-3.16 "TRAFFIC OPERATION SYSTEM" of the Special Provisions, and as directed by the Engineer.

Estimated cost of Extra Work at Force Account $20,000.00

Extra Work at Lump Sum:

Provide labor, equipment and materials for performing the service platform-related electrical changes, as described below. The work specified herein, and all work otherwise directed by the Engineer, shall be performed in accordance with Section 86 "SIGNALS, LIGHTING AND ELECTRICAL SYSTEMS" of the Standard Specifications, and Sections 10-3.10 "CONDUCTORS, CABLE AND WIRING" and 10-3.08 "SUPPORT HARDWARE FOR CONDUITS, CABLE TRAYS AND WIREWAYS AND FIRESTOPPING MATERIAL" of the Special Provisions.

1) Extend cable wireways and their supports on service platforms 18R, 18L and 21L, as directed by the Engineer.

2) Furnish and install Type 4 conduits from service platforms to bridge cells in lieu of rigid galvanized steel (RGS) conduits.

All work shall be performed in accordance with Section 10-3.08 "SUPPORT HARDWARE FOR CONDUITS, CABLE TRAYS AND WIREWAYS AND FIRESTOPPING MATERIAL" of the Special Provisions, and as directed by the Engineer in the field.

Estimated cost of Extra Work at Lump Sum $81,094.50

Estimated Cost: **Increase** ☑ **Decrease** ☐ **$101,094.50**

By reason of this order the time of completion will be adjusted as follows: 0 days

Signature	**Resident Engineer** Ben Ghafghazi	**Date** 5/6/2010
Signature	**Construction Manager** Amer Bata	**Date** 5/6/2010
Signature	**Construction Manager** Amer Bata	**Date** 5/28/10

We the undersigned contractor, have given careful consideration to the change proposed and agree, if this proposal is approved, that we will provide all equipment, furnish the materials, except as may otherwise be noted above, and perform all services necessary for the work above specified, and will accept as full payment therefor the prices shown above.

NOTE: If you, the contractor, do not sign acceptance of this order, your attention is directed to the requirements of the specifications as to proceeding with the ordered work and filing a written protest within the time therein specified.

Signature	**(Print name and title)** EDMUNDO A. PUCHI, TREASURER	**Date** 5/25/10

STATE OF CALIFORNIA - DEPARTMENT OF TRANSPORTATION

CONTRACT CHANGE ORDER

Change Requested by: Engineer

CCO 66 **Suppl. No.** 0 **Contract No.** 04 - 0120L4 **Road** ALA-80-1.6/2.7 **FED. AID LOC.:** NO FED AID

To: **M C M CONSTRUCTION INC**

You are directed to make the following changes from the plans and specifications or do the following described work not included in the plans and specifications for this contract. ***NOTE: This change order is not effective until approved by the Engineer.***

Description of work to be done, estimate of quantities and prices to be paid. (Segregate between additional work at contract price, agreed price and force account.) Unless otherwise stated, rates for rental of equipment cover only such time as equipment is actually used and no allowance will be made for idle time. This last percentage shown is the net accumulated increase or decrease from the original quantity in the Engineer's Estimate.

Extra Work at Lump Sum:

Revise details related to TOS preformed loops. Changes are shown on sheets 2 of 6 through 6 of 6 of this CCO.

1) Pull box PB-4D shown on the "Typical Pull Box Schedules" on sheets E-44 and E-77 shall be per new detail on revised sheet 301R1 in lieu of Caltrans Standard No. 6(T) shown on the original plans. These changes are shown on sheets 2 of 6, 3 of 6, and 6 of 6 of this CCO.

2) Add pull boxes PB-11 and PB-22 to the "Typical Pull Box Schedules" on sheets E-44 and E-77. These pull boxes shall be Caltrans Standard No. 6(T). These changes are shown on sheets 2 of 6, and 3 of 6 of this CCO.

3) Revise designation of preformed loops on sheet E-95. This change is shown on sheet 4 of 6 of this CCO.

4) Revise stationing for the loops in "Preformed Loop Schedule." on sheet E-204. Add detail for placing loops in asphalt concrete. These changes are shown on sheet 5 of 6 of this CCO.

For this work the contractor will be paid the sum of $90,969.00. This sum constitutes full compensation, including markups, for this change. All work shall be in accordance with Section 10-3, "Signals, Lighting and Electrical Systems," of the Special Provisions and Section 86, "Signals, Lighting and Electrical Systems," of the Standard Specifications. Galvanizing for the new pullbox detail on revised sheet 301R1 shall be in accordance with Section 75-1.05, "Galvanizing," of the Standard Specifications.

Extra Work at Agreed Lump Sum $90,969.00

Estimated Cost: **Increase** ☑ **Decrease** ☐ **$90,969.00**

By reason of this order the time of completion will be adjusted as follows: 0 days

Submitted by

Signature	**Resident Engineer** BEN GHAFGHAZI	**Date** 9/24/09

Approval Recommended by

Signature	**Construction Engineer** Ben Ghafghazi	**Date** 9/24/09

Engineer Approval by

Signature	**Construction Manager** Amer Bata	**Date** 3/1/10

We the undersigned contractor, have given careful consideration to the change proposed and agree, if this proposal is approved, that we will provide all equipment, furnish the materials, except as may otherwise be noted above, and perform all services necessary for the work above specified, and will accept as full payment therefor the prices shown above.

NOTE: If you, the contractor, do not sign acceptance of this order, your attention is directed to the requirements of the specifications as to proceeding with the ordered work and filing a written protest within the time therein specified.

Contractor Acceptance by

Signature	**(Print name and title)** EDMUNDO A. PUCHI, TREASURER	**Date** 2/22/10

STATE OF CALIFORNIA - DEPARTMENT OF TRANSPORTATION

CONTRACT CHANGE ORDER MEMORANDUM

TO: AMER BATA / BEN GHAFGHAZI

FROM: BEN GHAFGHAZI

FILE: **E.A.** 04 - 0120L4
CO-RTE-PM ALA-80-1.6/2.7
FED. NO. NO FED AID

CCO#: **66** SUPPLEMENT#: **0** Category Code: **CBPC**

CONTINGENCY BALANCE (incl. this change) **$4,544,103.40**

COST: **$90,969.00** INCREASE ☑ DECREASE ☐

HEADQUARTERS APPROVAL REQUIRED? ☐ YES ☑ NO

SUPPLEMENTAL FUNDS PROVIDED: **$0.00**

IS THIS REQUEST IN ACCORDANCE WITH ENVIRONMENTAL DOCUMENTS? ☑ YES ☐ NO

CCO DESCRIPTION:
Preformed loops pullbox.

PROJECT DESCRIPTION:
Construct bridge, roadway, building and electrical system.

Original Contract Time:	Time Adj. This Change:	Previously Approved CCO Time Adjustments:	Percentage Time Adjusted: (including this change)	Total # of Unreconciled Deferred Time CCO(s): (including this change)
810 Day(s)	**0** Day(s)	**184** Day(s)	**23** %	**11**

THIS CHANGE ORDER PROVIDES FOR:

Revising details related to TOS preformed loops. Changes are shown on sheets 2 of 6 through 6 of 6 of the CCO.

This change is necessary to correct loop details and labeling on plans as follows:

The "Typical Pull Box Schedules" on sheets E-44 and E-77 show pull box PB-4D as Caltrans Standard No. 6(T). Pull boxes PB-4D are to be installed on the bridge deck. No. 6(T) pull boxes are for in ground installation. A new detail has been developed for installation on the bridge deck. This detail is shown on revised sheet 301R1. Sheets E-44 and E-77 have been revised to reflect this change. These changes are shown on sheets 2 of 6, 3 of 6, and 6 of 6 of the CCO.

Pull boxes PB-11 and PB-22 are shown to be installed on the roadway shoulder on sheets E-94 and E-95. These pull boxes were not included in the "Typical Pull Box Schedules" on sheets E-44 and E-77. The correct pull boxes for these locations is Caltrans Standard No. 6(T). Sheets E-44 and E-77 have been revised to add these pull boxes. These changes are shown on sheets 2 of 6, and 3 of 6 of the CCO.

On sheet E-95 the preformed loops have been identified incorrectly. This sheet has been revised to show the correct designation of the loops. This change is shown on sheet 4 of 6 of the CCO.

Sheet E-204 corrects stationing for the loops in "Preformed Loop Schedule," and adds details for installing loops in asphalt concrete. The stationing was incorrectly shown on the original plans. Details for installing loops in asphalt concrete were not included in the original plans. These changes are shown on sheet 5 of 6 of the CCO.

This work will be paid as extra work at agreed lump sum for $90,969.00, which can be financed from the contingency fund.

This change was requested by Jaime Gutierrez of Project Development (memos attached). Electrical work has been discussed and concurred by Parviz Boozarpour of Electrical Design. Structure work has been discussed and concurred by Hasan El-Natur of Structures Design and Jal Birdy of Moffat Nichol. Concurrence has also been obtained from Lina Ellis of Structures Maintenance and Greg Klein of Electrical Maintenance.

No adjustment of contract time is warranted since this change does not affect the controlling operation.

ADA Notice: For individuals with sensory disabilities, this document is available in alternate formats. For information call: (916) 654-6410 or TDD (916) 654-3880 or write Records and Forms Management, 1120 N Street, MS-89, Sacramento, CA 95814.

CONCURRED BY:		
Construction Engineer:	Ben Ghafghazi	Date 9/24/09
Bridge Engineer:	Mehran Ardakanian	Date 9/24/09
Project Engineer:	Jaime Gutierrez	Date 7/31/08
Project Manager:		Date
FHWA Rep.:		Date
Environmental:		Date
Other (specify):	Parviz Boozarpour, Elec. Design	Date 7/31/08
Other (specify):	Hasan El-Natur, Structures Design	Date 9/11/08
District Prior Approval By:		Date
HQ (Issue Approve) By:		Date
Resident Engineer's Signature:		Date 9/24/09

ESTIMATE OF COST

	THIS REQUEST	TOTAL TO DATE
ITEMS	$0.00	$0.00
FORCE ACCOUNT	$0.00	$0.00
AGREED PRICE	$90,969.00	$90,969.00
ADJUSTMENT	$0.00	$0.00
TOTAL	$90,969.00	$90,969.00

FEDERAL PARTICIPATION

☐ PARTICIPATING ☐ PARTICIPATING IN PART ☑ NONE
☐ NON-PARTICIPATING (MAINTENANCE) ☐ NON-PARTICIPATING

FEDERAL SEGREGATION (if more than one Funding Source or P.I.P. type)
☑ CCO FUNDED PER CONTRACT ☐ CCO FUNDED AS FOLLOWS

FEDERAL FUNDING SOURCE	PERCENT

ADA Notice: For individuals with sensory disabilities, this document is available in alternate formats. For information call: (916) 654-6410 or TDD (916) 654-3880 or write Records and Forms Management, 1120 N Street, MS-89, Sacramento, CA 95814.

STATE OF CALIFORNIA - DEPARTMENT OF TRANSPORTATION

CONTRACT CHANGE ORDER

Change Requested by: Engineer

CCO 67	Suppl. No. 0	Contract No. 04 - 0120L4	Road ALA-80-1.6/2.7	FED. AID LOC.: NO FED AID

M C M CONSTRUCTION INC

You are directed to make the following changes from the plans and specifications or do the following described work not included in the plans and specifications for this contract. ***NOTE: This change order is not effective until approved by the Engineer.***

Description of work to be done, estimate of quantities and prices to be paid. (Segregate between additional work at contract price, agreed price and force account.) Unless otherwise stated, rates for rental of equipment cover only such time as equipment is actually used and no allowance will be made for idle time. This last percentage shown is the net accumulated increase or decrease from the original quantity in the Engineer's Estimate.

Adjustment of Compensation at Lump Sum:

Provide and install directional overcurrent relay to Circuit 52-21N per sheet 2 of 3 and 3 of 3 of this CCO. This work shall be in accordance with Section 10-3.23, "Mole Substation Electrical," of the Special Provisions. For this work, the contractor will be paid the sum of $17,494.50. This sum constitutes full compensation, including markups, for this change.

Estimated cost of Adjustment of Compensation at Lump Sum $17,494.50

Estimated Cost: Increase ☑ **Decrease** ☐ **$17,494.50**

By reason of this order the time of completion will be adjusted as follows: 0 days

Submitted by

Signature	Resident Engineer BEN GHAFGHAZI	Date 9/17/08

Approval Recommended by

Signature	Construction Engineer Ben Ghafghazi	Date 9/17/08

Engineer Approval by

Signature	Construction Engineer Ben Ghafghazi	Date 10/27/08

We the undersigned contractor, have given careful consideration to the change proposed and agree, if this proposal is approved, that we will provide all equipment, furnish the materials, except as may otherwise be noted above, and perform all services necessary for the work above specified, and will accept as full payment therefor the prices shown above.

NOTE: If you, the contractor, do not sign acceptance of this order, your attention is directed to the requirements of the specifications as to proceeding with the ordered work and filing a written protest within the time therein specified.

Contractor Acceptance by

Signature	(Print name and title) EDMUNDO A. PUCHI, TREASURER	Date 10/21/08

DIST	COUNTY	ROUTE	KILOMETER POST TOTAL PROJECT	SHEET No	TOTAL SHEETS
04	Ala	80	1.6/2.7	497	643

REGISTERED ELECTRICAL ENGINEER 05/15/06 DATE

1-29-07
PLANS APPROVAL DATE

PB POWER, Inc.
A Parsons Brinckerhoff Company
303 Second St., Suite 700N
San Francisco, CA 94107-1317

The State of California or its officers or agents shall not be responsible for the accuracy or completeness of electronic copies of this plan sheet.

To get to the Caltrans web site, go to: http://www.dot.ca.gov

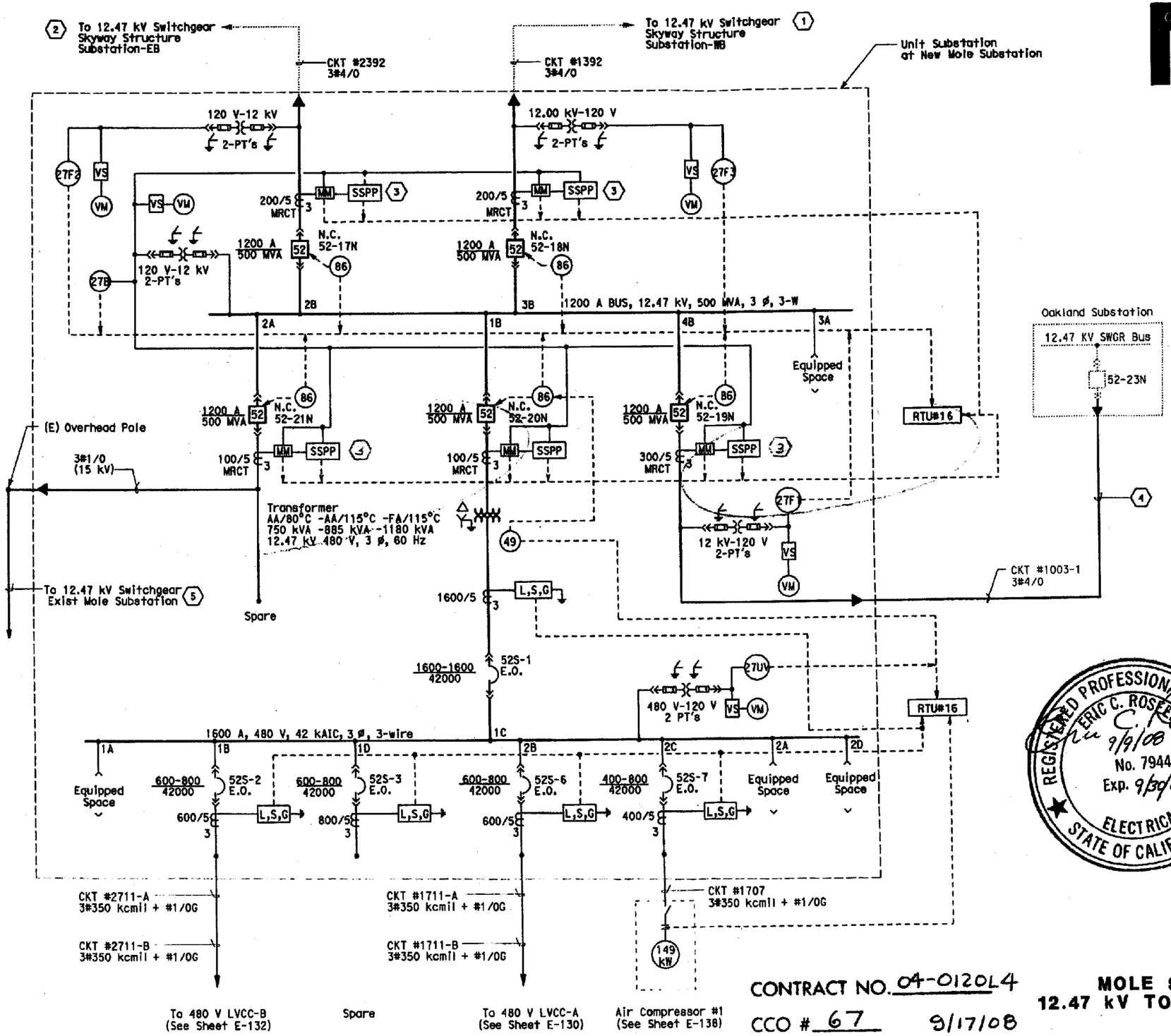

SHEET NOTES:

1. Connect to breaker No. 52-12N of 12.47 kV switchgear. See Skyway Structure Contract 04-012024.
2. Connect to breaker No. 52-15N of 12.47 kV switchgear.See Skyway Structure Contract 04-012024.
3. Requires directional overcurrent protection.
4. Terminate cable to 12.47 kV switchgear inside Oakland Substation building (by others) via MH-1.
5. Temporary 12.47 kV Feeder tie breaker, see sheets E-129 and E-182.

NOTES:

1. References:
   - For 12.47 kV overall single line diagram, see sheet E-125.
   - For unit substation elevation and dimensions, see sheet E-129.
   - For 12.47 kV switchgear connection diagrams, see sheets E-139 and E-140.
   - For 480 V switchgear and transformer connection diagrams, see sheets E-143 and E-144.

REGISTERED PROFESSIONAL ENGINEER ERIC C. ROSEN No. 7944 Exp. 9/30/08 ELECTRICAL STATE OF CALIFORNIA
9/9/08

Connection to ⑨ only, in order to match connection Sheet Note ⑥ on E-127.

CONTRACT NO. 04-012014
CCO # 67 9/17/08
Sheet 2 of 3

DETAILS
MOLE SUBSTATION ELECTRICAL
12.47 kV TO 480 V SINGLE LINE DIAGRAM
NO SCALE

E-126

REVISED BY	DATE REVISED		
AB	DATE 2/06	2/06	
CALCULATED/ DESIGNED BY	CHECKED BY		
DESIGN OVERSIGHT			
BENZAD GOLEMOHAMMADI			

STATE OF CALIFORNIA - DEPARTMENT OF TRANSPORTATION

FOR REDUCED PLANS ORIGINAL 0 20 40 60 80

DGN FILE =>t:\13103\ms\pse\otd-contract 1\cco\012014-otd-1conformed project plans\012014 final plans\401201ua126.dgn

DIST	COUNTY	ROUTE	KILOMETER POST TOTAL PROJECT	SHEET NO	TOTAL SHEETS
04	Ala	80	1.6/2.7	498	643

REGISTERED ELECTRICAL ENGINEER 05/15/06 DATE

1-29-07
PLANS APPROVAL DATE

PB POWER, Inc.
A Parsons Brinckerhoff Company
303 Second St., Suite 700N
San Francisco, CA 94107-1317

REGISTERED PROFESSIONAL ENGINEER JENS ERLINDSSON No. 8249 Exp. 9/30/08 ELECTRICAL STATE OF CALIFORNIA

The State of California or its officers or agents shall not be responsible for the accuracy or completeness of electronic copies of this plan sheet.

To get to the Caltrans web site, go to http://www.dot.ca.gov

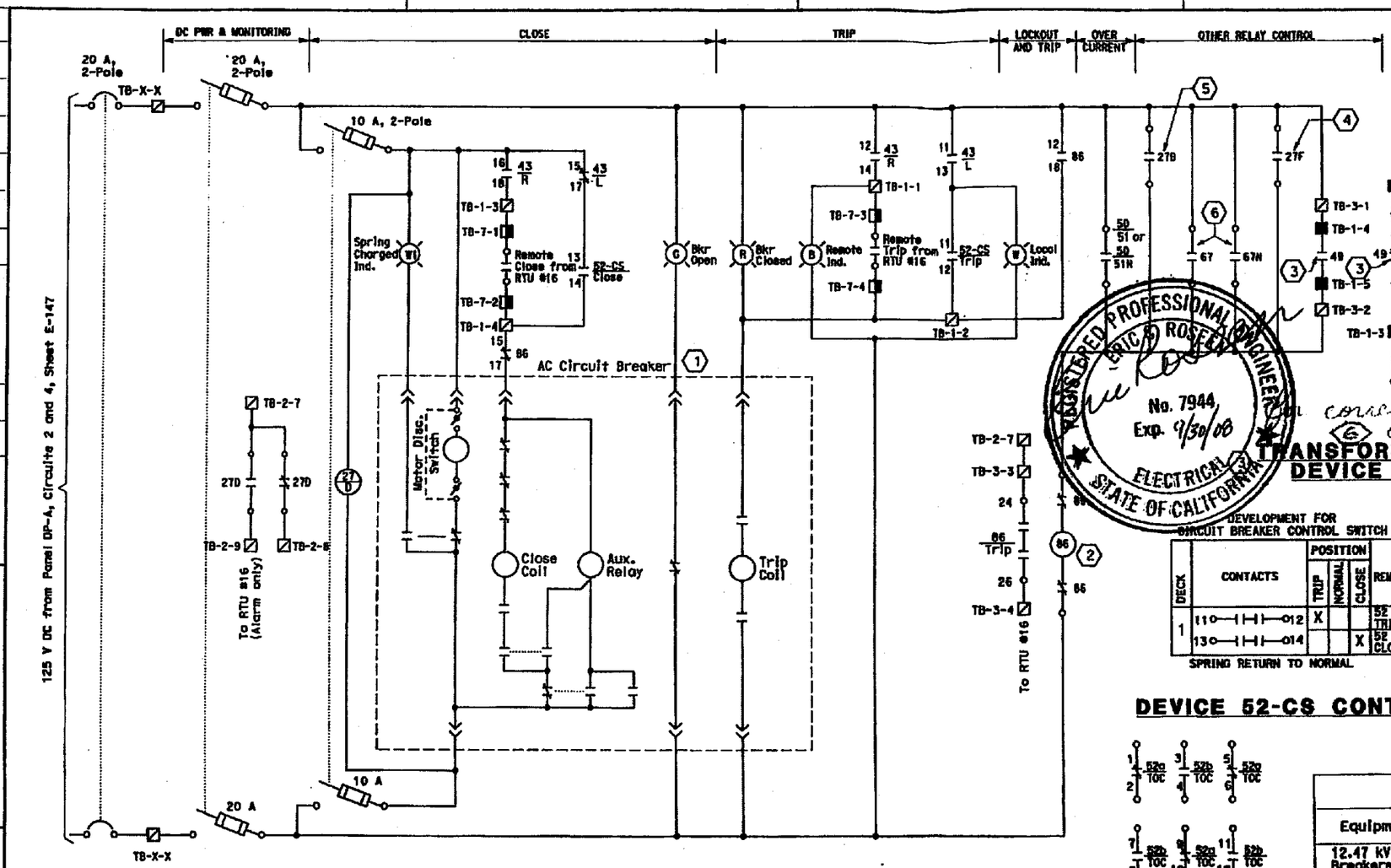

(7) 12.47 kV CIRCUIT BREAKER ELEMENTARY DIAGRAM

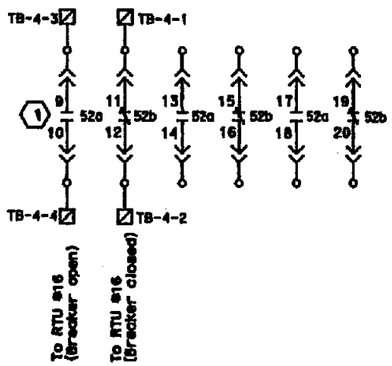

BKR 52 CONTACTS

DEVELOPMENT FOR LOCKOUT RELAY (MANUALLY RESET)

DECK	CONTACTS	POS. TRIP	POS. RESET	REMARKS
1	11 — 13		X	SPARE
	12 — 18	X		52 TRIP
	15 — 17		X	52 CLOSE
	14 — 16	X		SPARE
2	21 — 23		X	SPARE
	22 — 28	X		SPARE
	25 — 27		X	SPARE
	24 — 26	X		To RTU #16

DEVICE 86 CONTACTS

DEVELOPMENT FOR LOCAL - REMOTE CONTROL SWITCH

DECK	CONTACTS	POS. LOCAL	POS. REMOTE	
1	11 — 13	X		52 TRIP
	12 — 14		X	52 TRIP
	15 — 17	X		52 CLOSE
	16 — 18		X	52 CLOSE
2	21 — 23	X		TO RTU #16
	22 — 24		X	To RTU #16
	25 — 27	X		SPARE
	26 — 28		X	SPARE

DEVICE 43 L/R CONTACTS

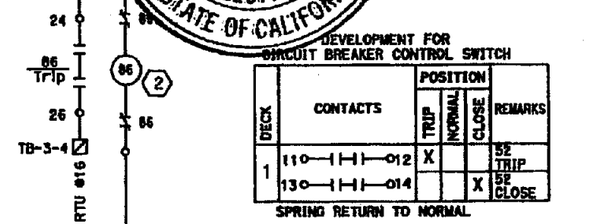

TRANSFORMER DEVICE 49

DEVELOPMENT FOR CIRCUIT BREAKER CONTROL SWITCH

DECK	CONTACTS	POSITION TRIP	POSITION NORMAL	POSITION CLOSE	REMARKS
1	11 — 12	X			52 TRIP
	13 — 14			X	52 CLOSE

SPRING RETURN TO NORMAL

DEVICE 52-CS CONTACTS

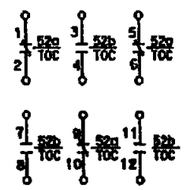

BKR 52-TOC CONTACTS

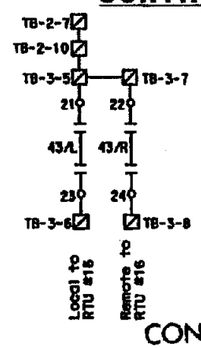

SHEET NOTES:

(1) 12.47 kV circuit breaker contacts are shown with the breaker in open position.

(2) Device 86 Lock-out relay contacts and wiring are shown in reset position.

(3) Device 49, Transformer Over-Temperature, is required only for 12.47 kV circuit breaker 52-20N, See sheet E-144.

(4) Device 27F Feeder Undervoltage relay and wiring is not required for 12.47 kV circuit breakers 52-17N, 52-18N and 52-19N only.

(5) Device 27B Bus Undervoltage relay and wiring is required for 12.47 kV circuit breaker 52-20N only.

(6) ~~Device 67 and 67N Directional Overcurrent~~ relays and wiring are required for 12.47 kV circuit breakers 52-17N, 52-18N, 52-19N and ~~52-20N~~ 52-21N only.

(7) Elementary diagram is typical with exceptions noted for breakers 52-17N, 52-18N, 52-19N, 52-20N and 52-21N.

NOTES:

1. References:
   - For unit substation connection diagrams, see sheets E-139, E-140, E-143 and E-144.
   - For single line diagram, see sheet E-126.
   - For RTU #16 wiring diagrams, see sheets E-156 thru E-158.

Unit Substation SCADA Inputs/Outputs (To RTU #16)

Equipment	Device No.	Description	Digital Input	Digital Output	Low Level Com.
12.47 kV Breakers 52-17N 52-18N 52-19N 52-20N 52-21N	52a	Breaker Open	1		
	52b	Breaker Closed	1		
	52a	Breaker Open		1	
	52b	Breaker Closed		1	
	27D	DC Undervoltage	1		
	86	Lock-out Relay	1		
(4)	27F	Feeder Undervoltage	1		
	43 L/R	Local/Remote	2		
	(SSPP) 50/51 50/51N	Overcurrent	1		
	MM	3-phase amps			1
		Power Factor			1
		Kilowatt			1
		Kilovars			1
(3) Transformer	49	Over-temperature	1		
(5) 12.47 kV Swgr	27B	12.47 kV Bus Undervoltage	1		
480 V Swgr	27UV	480 V Bus Undervoltage	1		

DETAILS
MOLE SUBSTATION ELECTRICAL
12.47 kV CIRCUIT BREAKER ELEMENTARY DIAGRAM
NO SCALE

CONTRACT NO. 04-0120L4

CCO # 67 9/17/08

Sheet 3 of 3

E-127

STATE OF CALIFORNIA - DEPARTMENT OF TRANSPORTATION

DESIGN OVERSIGHT: BEHZAD GOLEMOHAMMADI

CALCULATED/DESIGNED BY	AB	DATE 2/06	REVISED BY
CHECKED BY	FK	2/06	DATE REVISED

DATE PLOTTED => 7/2/2008

STATE OF CALIFORNIA - DEPARTMENT OF TRANSPORTATION

CONTRACT CHANGE ORDER MEMORANDUM

DATE: 8/22/2008 Page 1 of 1

TO: AMER BATA / BEN GHAFGHAZI	FILE: E.A. 04 - 0120L4
FROM: BEN GHAFGHAZI	CO-RTE-PM ALA-80-1.6/2.7
	FED. NO. NO FED AID
CCO#: 67 SUPPLEMENT#: 0 Category Code: CBPC	CONTINGENCY BALANCE (incl. this change) $13,496,520.20
COST: $17,494.50 INCREASE ☑ DECREASE ☐	HEADQUARTERS APPROVAL REQUIRED? ☐ YES ☑ NO
SUPPLEMENTAL FUNDS PROVIDED: $0.00	IS THIS REQUEST IN ACCORDANCE WITH ENVIRONMENTAL DOCUMENTS? ☑ YES ☐ NO
CCO DESCRIPTION: Provide overcurrent protection.	**PROJECT DESCRIPTION:** Construct bridge, roadway, building and electrical system.

Original Contract Time:	Time Adj. This Change:	Previously Approved CCO Time Adjustments:	Percentage Time Adjusted: (including this change)	Total # of Unreconciled Deferred Time CCO(s): (including this change)
810 Day(s)	0 Day(s)	0 Day(s)	0 %	6

THIS CHANGE ORDER PROVIDES FOR:

Providing and installing directional overcurrent relay to Circuit 52-21N per sheet 2 of 3 and 3 of 3 of the CCO. This work shall be in accordance with Section 10-3.23, "Mole Substation Electrical," of the Special Provisions.

This change is necessary because the 12.47 kV switchgear served by Circuit 52-21N will be damaged in the event of an overcurrent. If an overcurrent happens the relay will trip the circuit breaker. The plans do not show this circuit having this protection.

Payment for these changes will be Adjustment of Compensation at Lump Sum for $17,494.50, which can be financed from the contingency fund. A detailed cost analysis is on file.

This work has been discussed and concurred with Parviz Boozarpour of Electrical Design, Jaime Gutierrez of Project Development, and Rene Forteleza of Electrical Maintenance for SFOBB.

No adjustment of contract time is warranted since this change does not affect the controlling operation.

CONCURRED BY:			
Construction Engineer:	Ben Ghafghazi	Date	9/17/08
Bridge Engineer:		Date	
Project Engineer:	Jaime Gutierrez	Date	9/9/08
Project Manager:		Date	
FHWA Rep.:		Date	
Environmental:		Date	
Other (specify):	Parviz Boozarpour, Elec. Design	Date	9/2/08
Other (specify):	Rene Forteleza, Elec. Maint.	Date	9/9/08
District Prior Approval By:		Date	
HQ (Issue Approve) By:		Date	
Resident Engineer's Signature:		Date	9/17/08

ESTIMATE OF COST

	THIS REQUEST	TOTAL TO DATE
ITEMS	$0.00	$0.00
FORCE ACCOUNT	$0.00	$0.00
AGREED PRICE	$0.00	$0.00
ADJUSTMENT	$17,494.50	$17,494.50
TOTAL	$17,494.50	$17,494.50

FEDERAL PARTICIPATION

☐ PARTICIPATING ☐ PARTICIPATING IN PART ☐ NONE
☐ NON-PARTICIPATING (MAINTENANCE) ☐ NON-PARTICIPATING

FEDERAL SEGREGATION (if more than one Funding Source or P.I.P. type)
☑ CCO FUNDED PER CONTRACT ☐ CCO FUNDED AS FOLLOWS

FEDERAL FUNDING SOURCE	PERCENT

ADA Notice: For individuals with sensory disabilities, this document is available in alternate formats. For information call: (916) 654-6410 or TDD (916) 654-3880 or write Records and Forms Management, 1120 N Street, MS-89, Sacramento, CA 95814.

STATE OF CALIFORNIA - DEPARTMENT OF TRANSPORTATION

CONTRACT CHANGE ORDER

Change Requested by: Engineer

CCO 68	Suppl. No. 0	Contract No. 04 - 0120L4	Road ALA-80-1.6/2.7	FED. AID LOC.: NO FED AID

M C M CONSTRUCTION INC

You are directed to make the following changes from the plans and specifications or do the following described work not included in the plans and specifications for this contract. ***NOTE: This change order is not effective until approved by the Engineer.***

Description of work to be done, estimate of quantities and prices to be paid. (Segregate between additional work at contract price, agreed price and force account.) Unless otherwise stated, rates for rental of equipment cover only such time as equipment is actually used and no allowance will be made for idle time. This last percentage shown is the net accumulated increase or decrease from the original quantity in the Engineer's Estimate.

Extra Work at Force Account:

Place shoring from approximate station MRDTR 10+80 to 11+05 Lt. on the north side of the Mole Substation and duct bank manholes #1, #2, and #4. Shoring shall be left in place at the end of the contract. All work shall be in accordance with Section 5-1.02A, "Trench Excavation Safety Plans," of the Standard Specifications.

Estimated cost of Extra Work at Force Account $30,000.00

Estimated Cost: **Increase** ☑ **Decrease** ☐ **$30,000.00**

By reason of this order the time of completion will be adjusted as follows: 0 days

Submitted by		
Signature	Resident Engineer BEN GHAFGHAZI	Date 11/12/08
Approval Recommended by		
Signature	Construction Engineer Ben Ghafghazi	Date 11/12/08
Engineer Approval by		
Signature William Howe	Construction Engineer FOR Ben Ghafghazi	Date 2-20-09

We the undersigned contractor, have given careful consideration to the change proposed and agree, if this proposal is approved, that we will provide all equipment, furnish the materials, except as may otherwise be noted above, and perform all services necessary for the work above specified, and will accept as full payment therefor the prices shown above.

NOTE: If you, the contractor, do not sign acceptance of this order, your attention is directed to the requirements of the specifications as to proceeding with the ordered work and filing a written protest within the time therein specified.

Contractor Acceptance by		
Signature	(Print name and title) EDMUNDO A. PUCHI, TREASURER	Date 2/17/09

STATE OF CALIFORNIA - DEPARTMENT OF TRANSPORTATION

CONTRACT CHANGE ORDER MEMORANDUM

DATE: 9/25/2008 Page 1 of 1

TO: AMER BATA / BEN GHAFGHAZI	FILE: E.A. 04 - 0120L4
FROM: BEN GHAFGHAZI	CO-RTE-PM ALA-80-1.6/2.7
	FED. NO. NO FED AID
CCO#: 68 SUPPLEMENT#: 0 Category Code: CDPA	CONTINGENCY BALANCE (incl. this change) $13,634,997.20
COST: $30,000.00 INCREASE ☑ DECREASE ☐	HEADQUARTERS APPROVAL REQUIRED? ☐ YES ☑ NO
SUPPLEMENTAL FUNDS PROVIDED: $0.00	IS THIS REQUEST IN ACCORDANCE WITH ENVIRONMENTAL DOCUMENTS? ☑ YES ☐ NO
CCO DESCRIPTION: Substation shoring.	**PROJECT DESCRIPTION:** Construct bridge, roadway, building and electrical system.

Original Contract Time:	Time Adj. This Change:	Previously Approved CCO Time Adjustments:	Percentage Time Adjusted: (including this change)	Total # of Unreconciled Deferred Time CCO(s): (including this change)
810 Day(s)	0 Day(s)	0 Day(s)	0 %	6

THIS CHANGE ORDER PROVIDES FOR:

Placing shoring from approximate station MRDTR 10+80 to 11+05 Lt. on the north side of the Mole Substation and duct bank manholes #1, #2, and #4.

This change is necessary because the excavation of the Mole Substation resulted in a cut greater than 1.5 m. This cut extended approximately from the northwest corner of the substation building to the northwest corner of manhole #4. The details in the contract plans did not indicate this would be the case. The face of the cut is 1.5 m away from the ETW of the number 5 lane of Eastbound I-80. It was determined in the field that a vertical face close to the ETW may undermine the roadway and presented an imminent safety hazard to traffic. MCM was directed to shore the face as soon as practicable. A soldier pile and steel plate system as approved for installation. This shoring will remain in place and be removed under the upcoming OTD-2 project, EA 0120M4, at which time a permanent configuration will be constructed.

This work will be paid as Extra Work at Force Account for $30,000.00, which can be financed from the contingency fund.

This change was discussed and concurred with Jamie Gutierrez of project Development. Maintenance concurrence is not necessary since this is temporary work.

No adjustment of contract time is warranted since this change does not affect the controlling operation.

CONCURRED BY:		
Construction Engineer:	Ben Ghafghazi	Date 11/12/08
Bridge Engineer:		Date
Project Engineer:	Jaime Gutierrez	Date 11/12/08
Project Manager:		Date
FHWA Rep.:		Date
Environmental:		Date
Other (specify):		Date
Other (specify):		Date
District Prior Approval By:		Date
HQ (Issue Approve) By:		Date
Resident Engineer's Signature:		Date 11/12/08

ESTIMATE OF COST

	THIS REQUEST	TOTAL TO DATE
ITEMS	$0.00	$0.00
FORCE ACCOUNT	$30,000.00	$30,000.00
AGREED PRICE	$0.00	$0.00
ADJUSTMENT	$0.00	$0.00
TOTAL	$30,000.00	$30,000.00

FEDERAL PARTICIPATION

☐ PARTICIPATING ☐ PARTICIPATING IN PART ☑ NONE
☐ NON-PARTICIPATING (MAINTENANCE) ☐ NON-PARTICIPATING

FEDERAL SEGREGATION (if more than one Funding Source or P.I.P. type)
☑ CCO FUNDED PER CONTRACT ☐ CCO FUNDED AS FOLLOWS

FEDERAL FUNDING SOURCE	PERCENT

ADA Notice: For individuals with sensory disabilities, this document is available in alternate formats. For information call: (916) 654-6410 or TDD (916) 654-3880 or write Records and Forms Management, 1120 N Street, MS-89, Sacramento, CA 95814.

STATE OF CALIFORNIA - DEPARTMENT OF TRANSPORTATION

CONTRACT CHANGE ORDER MEMORANDUM

DATE: 2/27/2009 Page 1 of 1

TO: AMER BATA / BEN GHAFGHAZI	FILE: **E.A.** 04 - 0120L4
FROM: BEN GHAFGHAZI	**CO-RTE-PM** ALA-80-1.6/2.7
	FED. NO. NO FED AID
CCO#: **68** SUPPLEMENT#: **1** Category Code: **CDPA**	CONTINGENCY BALANCE (incl. this change) **$8,669,749.20**
COST: **$60,000.00** INCREASE ☑ DECREASE ☐	HEADQUARTERS APPROVAL REQUIRED? ☐ YES ☑ NO
SUPPLEMENTAL FUNDS PROVIDED: **$0.00**	IS THIS REQUEST IN ACCORDANCE WITH ENVIRONMENTAL DOCUMENTS? ☑ YES ☐ NO
CCO DESCRIPTION: Additional funds for Substation shoring	**PROJECT DESCRIPTION:** Construct bridge, roadway, building and electrical system.

Original Contract Time:	Time Adj. This Change:	Previously Approved CCO Time Adjustments:	Percentage Time Adjusted: (including this change)	Total # of Unreconciled Deferred Time CCO(s): (including this change)
810 Day(s)	**0** Day(s)	**184** Day(s)	**23** %	**8**

THIS CHANGE ORDER PROVIDES FOR:

Additional funds for placing shoring from approximate station MRDTR 10+80 to 11+05 Lt. on the north side of the Mole Substation and duct bank manholes #1, #2, and #4.

CCO No. 68 was written to install temporary soldier pile shoring between the substation and EB 80 because the substation excavation resulted in a cut greater than 1.5 m near the ETW of Eastbound I-80. The plans did not indicate this would be the case. Since this was a safety issue, MCM was directed to install shoring. CCO 68 was estimated to be $30,000. Bills for this work have totaled $82,000 to date. This shoring will remain in place and be removed under the upcoming OTD-2 project, EA 0120M4, at which time a permanent configuration will be constructed. New work is not being added to CCO No. 68.

This work will be paid as Extra Work at Force Account for $60,000.00, which can be financed from the contingency fund.

Design and Maintenance concurrence is not necessary since this CCO is for additional funds only.

No adjustment of contract time is warranted since this change does not affect the controlling operation.

CONCURRED BY:		
Construction Engineer:	Ben Ghafghazi	Date 3/4/09
Bridge Engineer:		Date
Project Engineer:		Date
Project Manager:		Date
FHWA Rep.:		Date
Environmental:		Date
Other (specify):		Date
Other (specify):		Date
District Prior Approval By:		Date
HQ (Issue Approve) By:		Date
Resident Engineer's Signature:		Date 3/4/09

ESTIMATE OF COST

	THIS REQUEST	TOTAL TO DATE
ITEMS	$0.00	$0.00
FORCE ACCOUNT	$60,000.00	$90,000.00
AGREED PRICE	$0.00	$0.00
ADJUSTMENT	$0.00	$0.00
TOTAL	$60,000.00	$90,000.00

FEDERAL PARTICIPATION

☐ PARTICIPATING ☐ PARTICIPATING IN PART ☑ NONE
☐ NON-PARTICIPATING (MAINTENANCE) ☐ NON-PARTICIPATING

FEDERAL SEGREGATION (if more than one Funding Source or P.I.P. type)
☐ CCO FUNDED PER CONTRACT ☑ CCO FUNDED AS FOLLOWS

FEDERAL FUNDING SOURCE PERCENT

ADA Notice: For individuals with sensory disabilities, this document is available in alternate formats. For information call: (916) 654-6410 or TDD (916) 654-3880 or write Records and Forms Management, 1120 N Street, MS-89, Sacramento, CA 95814.

STATE OF CALIFORNIA - DEPARTMENT OF TRANSPORTATION

CONTRACT CHANGE ORDER

Change Requested by: Engineer

CCO 68	Suppl. No. 1	Contract No. 04 - 0120L4	Road ALA-80-1.6/2.7	FED. AID LOC.: NO FED AID

M C M CONSTRUCTION INC

You are directed to make the following changes from the plans and specifications or do the following described work not included in the plans and specifications for this contract. ***NOTE: This change order is not effective until approved by the Engineer.***

Description of work to be done, estimate of quantities and prices to be paid. (Segregate between additional work at contract price, agreed price and force account.) Unless otherwise stated, rates for rental of equipment cover only such time as equipment is actually used and no allowance will be made for idle time. This last percentage shown is the net accumulated increase or decrease from the original quantity in the Engineer's Estimate.

Provide additional funds for CCO No. 68. Work is as described below.

Extra Work at Force Account:

Place shoring from approximate station MRDTR 10+80 to 11+05 Lt. on the north side of the Mole Substation and duct bank manholes #1, #2, and #4. Shoring shall be left in place at the end of the contract. All work shall be in accordance with Section 5-1.02A, "Trench Excavation Safety Plans," of the Standard Specifications.

Estimated cost of Extra Work at Force Account $60,000.00

Estimated Cost: Increase ☑ **Decrease** ☐ **$60,000.00**

By reason of this order the time of completion will be adjusted as follows: 0 days

Submitted by

Signature	Resident Engineer BEN GHAFGHAZI	Date 3/4/09

Approval Recommended by

Signature	Construction Engineer Ben Ghafghazi	Date 3/4/09

Engineer Approval by

Signature	Construction Manager Amer Bata	Date 3/20/09

We the undersigned contractor, have given careful consideration to the change proposed and agree, if this proposal is approved, that we will provide all equipment, furnish the materials, except as may otherwise be noted above, and perform all services necessary for the work above specified, and will accept as full payment therefor the prices shown above.

NOTE: If you, the contractor, do not sign acceptance of this order, your attention is directed to the requirements of the specifications as to proceeding with the ordered work and filing a written protest within the time therein specified.

Contractor Acceptance by

Signature	(Print name and title) EDMUNDO A. PUCHI, TREASURER	Date 3/10/09

STATE OF CALIFORNIA - DEPARTMENT OF TRANSPORTATION

CONTRACT CHANGE ORDER MEMORANDUM

DATE: 5/27/2009 Page 1 of 1

TO: AMER BATA / BEN GHAFGHAZI	FILE: E.A. 04 - 0120L4
FROM: BEN GHAFGHAZI	CO-RTE-PM ALA-80-1.6/2.7
	FED. NO. NO FED AID
CCO#: 68 SUPPLEMENT#: 2 Category Code: CDPA	CONTINGENCY BALANCE (incl. this change) $7,109,830.20
COST: $30,000.00 INCREASE ☑ DECREASE ☐	HEADQUARTERS APPROVAL REQUIRED? ☐ YES ☑ NO
SUPPLEMENTAL FUNDS PROVIDED: $0.00	IS THIS REQUEST IN ACCORDANCE WITH ENVIRONMENTAL DOCUMENTS? ☑ YES ☐ NO
CCO DESCRIPTION: Additional funds for Substation shoring	**PROJECT DESCRIPTION:** Construct bridge, roadway, building and electrical system.

Original Contract Time:	Time Adj. This Change:	Previously Approved CCO Time Adjustments:	Percentage Time Adjusted: (including this change)	Total # of Unreconciled Deferred Time CCO(s): (including this change)
810 Day(s)	0 Day(s)	184 Day(s)	23 %	10

THIS CHANGE ORDER PROVIDES FOR:

Additional funds for placing shoring from approximate station MRDTR 10+80 to 11+05 Lt. on the north side of the Mole Substation and duct bank manholes #1, #2, and #4.

CCO No. 68 was written to install temporary soldier pile shoring between the substation and EB 80 because the substation excavation resulted in a cut greater than 1.5 m near the ETW of Eastbound I-80. The plans did not indicate this would be the case. Since this was a safety issue, MCM was directed to install shoring. CCO No. 68 was estimated to be $30,000. Additional costs were incurred and a supplement of $60,000 was issued. Bills for this work have totaled $116,000 to date, therefore, a second supplement is required. This shoring will remain in place and be removed under the upcoming OTD-2 project, EA 0120M4, at which time a permanent configuration will be constructed. New work is not being added to CCO No. 68.

This work will be paid as Extra Work at Force Account for $30,000.00, which can be financed from the contingency fund.

Design and Maintenance concurrence is not necessary since this CCO is for additional funds only.

No adjustment of contract time is warranted since this change does not affect the controlling operation.

CONCURRED BY:		
Construction Engineer:	Ben Ghafghazi	Date 6/1/09
Bridge Engineer:		Date
Project Engineer:		Date
Project Manager:		Date
FHWA Rep.:		Date
Environmental:		Date
Other (specify):		Date
Other (specify):		Date
District Prior Approval By:		Date
HQ (Issue Approve) By:		Date
Resident Engineer's Signature:		Date 6/1/09

ESTIMATE OF COST

	THIS REQUEST	TOTAL TO DATE
ITEMS	$0.00	$0.00
FORCE ACCOUNT	$30,000.00	$120,000.00
AGREED PRICE	$0.00	$0.00
ADJUSTMENT	$0.00	$0.00
TOTAL	$30,000.00	$120,000.00

FEDERAL PARTICIPATION

☐ PARTICIPATING ☐ PARTICIPATING IN PART ☑ NONE
☐ NON-PARTICIPATING (MAINTENANCE) ☐ NON-PARTICIPATING

FEDERAL SEGREGATION (if more than one Funding Source or P.I.P. type)
☑ CCO FUNDED PER CONTRACT ☐ CCO FUNDED AS FOLLOWS

FEDERAL FUNDING SOURCE PERCENT

ADA Notice: For individuals with sensory disabilities, this document is available in alternate formats. For information call: (916) 654-6410 or TDD (916) 654-3880 or write Records and Forms Management, 1120 N Street, MS-89, Sacramento, CA 95814.

CONTRACT CHANGE ORDER

Change Requested by: Engineer

CCO 68	Suppl. No. 2	Contract No. 04 - 0120L4	Road ALA-80-1.6/2.7	FED. AID LOC.: NO FED AID

M C M CONSTRUCTION INC

You are directed to make the following changes from the plans and specifications or do the following described work not included in the plans and specifications for this contract. ***NOTE: This change order is not effective until approved by the Engineer.***

Description of work to be done, estimate of quantities and prices to be paid. (Segregate between additional work at contract price, agreed price and force account.) Unless otherwise stated, rates for rental of equipment cover only such time as equipment is actually used and no allowance will be made for idle time. This last percentage shown is the net accumulated increase or decrease from the original quantity in the Engineer's Estimate.

Provide additional funds for CCO No. 68. Work is as described below.

Extra Work at Force Account:

Place shoring from approximate station MRDTR 10+80 to 11+05 Lt. on the north side of the Mole Substation and duct bank manholes #1, #2, and #4. Shoring shall be left in place at the end of the contract. All work shall be in accordance with Section 5-1.02A, "Trench Excavation Safety Plans," of the Standard Specifications.

Estimated cost of Extra Work at Force Account $30,000.00

Estimated Cost: Increase ☑ **Decrease** ☐ **$30,000.00**

By reason of this order the time of completion will be adjusted as follows: 0 days

Submitted by

Signature	Resident Engineer BEN GHAFGHAZI	Date 6/1/09

Approval Recommended by

Signature	~~Construction Engineer~~ Ben Ghafghazi	Date 6/1/09

Engineer Approval by

Signature	Construction Manager Amer Bata	Date 6/5/09

We the undersigned contractor, have given careful consideration to the change proposed and agree, if this proposal is approved, that we will provide all equipment, furnish the materials, except as may otherwise be noted above, and perform all services necessary for the work above specified, and will accept as full payment therefor the prices shown above.

NOTE: If you, the contractor, do not sign acceptance of this order, your attention is directed to the requirements of the specifications as to proceeding with the ordered work and filing a written protest within the time therein specified.

Contractor Acceptance by

Signature Not Required	(Print name and title)	Date

STATE OF CALIFORNIA - DEPARTMENT OF TRANSPORTATION

CONTRACT CHANGE ORDER MEMORANDUM

DATE: 5/13/2010 Page 1 of 1

TO: AMER BATA / BEN GHAFGHAZI	FILE: E.A. 04 - 0120L4
FROM: BEN GHAFGHAZI	CO-RTE-PM ALA-80-1.6/2.7
	FED. NO. NO FED AID
CCO#: 68 SUPPLEMENT#: 3 Category Code: CDPA	CONTINGENCY BALANCE (incl. this change): $845,847.90
COST: $50,000.00 INCREASE ☑ DECREASE ☐	HEADQUARTERS APPROVAL REQUIRED? ☐ YES ☑ NO
SUPPLEMENTAL FUNDS PROVIDED: $0.00	IS THIS REQUEST IN ACCORDANCE WITH ENVIRONMENTAL DOCUMENTS? ☑ YES ☐ NO
CCO DESCRIPTION: Additional funds for Substation shoring	**PROJECT DESCRIPTION:** Construct bridge, roadway, building and electrical system.

Original Contract Time:	Time Adj. This Change:	Previously Approved CCO Time Adjustments:	Percentage Time Adjusted: (including this change)	Total # of Unreconciled Deferred Time CCO(s): (including this change)
810 Day(s)	0 Day(s)	184 Day(s)	23 %	0

THIS CHANGE ORDER PROVIDES FOR:

Additional funding for placing temporary shoring along the Mole Substation and duct bank Manholes #1, #2 and #4.

The original Change Order No. 68 provided for the contractor to place temporary shoring along the north edge of the excavation required to construct the Mole Substation and duct bank. The resulting cut was greater than 1.5 meters in depth and 1.5 meters from the ETW of the mainline for eastbound I-80. The contract plans did not indicate that this vertical grade difference would exist. Supplements No. 1 and No. 2 were written to provide additional funds for this work.

The cost of the work has now exceeded the previous estimates and it is now anticipated that additional funding of $50,000.00 will be required to fund the work performed.

The work shall be compensated as extra work at force account at an estimated cost of $50,000.00 which shall be financed from the contract contingency funds. A cost analysis is on file.

No adjustment of contract time is warranted as the change will not affect the controlling operation.

Maintenance concurrence is not required as this change shall not affect any permanent roadway features.

CONCURRED BY:		
Construction Engineer:	Ben Ghafghazi	Date 12/28/2010
Bridge Engineer:		Date
Project Engineer:	Jaime Gutierrez	Date 11/12/10
Project Manager:		Date
FHWA Rep.:		Date
Environmental:		Date
Other (specify):		Date
Other (specify):		Date
District Prior Approval By:		Date
HQ (Issue Approve) By:		Date
Resident Engineer's Signature:		Date 12/28/2010

ESTIMATE OF COST

	THIS REQUEST	TOTAL TO DATE
ITEMS	$0.00	$0.00
FORCE ACCOUNT	$50,000.00	$170,000.00
AGREED PRICE	$0.00	$0.00
ADJUSTMENT	$0.00	$0.00
TOTAL	$50,000.00	$170,000.00

FEDERAL PARTICIPATION

☐ PARTICIPATING ☐ PARTICIPATING IN PART ☑ NONE
☐ NON-PARTICIPATING (MAINTENANCE) ☐ NON-PARTICIPATING

FEDERAL SEGREGATION (if more than one Funding Source or P.I.P. type)
☐ CCO FUNDED PER CONTRACT ☐ CCO FUNDED AS FOLLOWS

FEDERAL FUNDING SOURCE	PERCENT

ADA Notice: For individuals with sensory disabilities, this document is available in alternate formats. For information call: (916) 654-6410 or TDD (916) 654-3880 or write Records and Forms Management, 1120 N Street, MS-89, Sacramento, CA 95814.

STATE OF CALIFORNIA - DEPARTMENT OF TRANSPORTATION

CONTRACT CHANGE ORDER

Change Requested by: Engineer

CCO: 68	Suppl. No. 3	Contract No. 04 - 0120L4	Road ALA-80-1.6/2.7	FED. AID LOC.: NO FED AID

To: **M C M CONSTRUCTION INC**

You are directed to make the following changes from the plans and specifications or do the following described work not included in the plans and specifications for this contract. ***NOTE: This change order is not effective until approved by the Engineer.***

Description of work to be done, estimate of quantities and prices to be paid. (Segregate between additional work at contract price, agreed price and force account.) Unless otherwise stated, rates for rental of equipment cover only such time as equipment is actually used and no allowance will be made for idle time. This last percentage shown is the net accumulated increase or decrease from the original quantity in the Engineer's Estimate.

Extra Work at Force Account:

Provide additional funds for the work specified under the original Change Order No. 68.

Estimated cost of Extra Work at Force Account $50,000.00

Estimated Cost: Increase ☑ Decrease ☐ **$50,000.00**

By reason of this order the time of completion will be adjusted as follows: 0 days

Submitted by

Signature	Resident Engineer Ben Ghafghazi	Date 12/28/2010

Approval Recommended by

Signature	Construction Engineer Ben Ghafghazi	Date 12/28/2010

Engineer Approval by

Signature	Construction Manager For Amer Bata	Date 12/29/2010

We the undersigned contractor, have given careful consideration to the change proposed and agree, if this proposal is approved, that we will provide all equipn furnish the materials, except as may otherwise be noted above, and perform all services necessary for the work above specified, and will accept as full paymer therefor the prices shown above.

NOTE: If you, the contractor, do not sign acceptance of this order, your attention is directed to the requirements of the specifications as to proceeding with the ordered work and filing a written protest within the time therein specified.

Contractor Acceptance by

Signature	(Print name and title)	Date

CONTRACT CHANGE ORDER

Change Requested by: Engineer

CCO 69	Suppl. No. 0	Contract No. 04 - 0120L4	Road ALA-80-1.6/2.7	FED. AID LOC.: NO FED AID

M C M CONSTRUCTION INC

You are directed to make the following changes from the plans and specifications or do the following described work not included in the plans and specifications for this contract. ***NOTE: This change order is not effective until approved by the Engineer.***

Description of work to be done, estimate of quantities and prices to be paid. (Segregate between additional work at contract price, agreed price and force account.) Unless otherwise stated, rates for rental of equipment cover only such time as equipment is actually used and no allowance will be made for idle time. This last percentage shown is the net accumulated increase or decrease from the original quantity in the Engineer's Estimate.

Extra Work at Lump Sum:

Install duct bank and conduits within limits of Mole Substation building as shown on sheet 2 of 2 of this CCO. Reference to "Conduits by Others" and "Not on this Contract" have been removed from Sheet E-101. All work shall be in accordance with Section 10-3, "Signals, Lighting and Electrical Systems," of the Special Provisions and Section 86, "Signals, Lighting and Electrical Systems," of the Standard Specifications. For this work, the contractor will be paid the sum of $55,670.25. This sum constitutes full compensation, including markups, for this change.

Extra Work at Agreed Lump Sum $55,670.25

Estimated Cost: Increase ☑ **Decrease** ☐ **$55,670.25**

By reason of this order the time of completion will be adjusted as follows: 0 days

Submitted by		
Signature	Resident Engineer BEN GHAFGHAZI	Date 10/9/08
Approval Recommended by		
Signature	~~Construction~~ Engineer Ben Ghafghazi	Date 10/9/08
Engineer Approval by		
Signature	Construction Manager Amer Bata	Date 10/30/08

We the undersigned contractor, have given careful consideration to the change proposed and agree, if this proposal is approved, that we will provide all equipment, furnish the materials, except as may otherwise be noted above, and perform all services necessary for the work above specified, and will accept as full payment therefor the prices shown above.

NOTE: If you, the contractor, do not sign acceptance of this order, your attention is directed to the requirements of the specifications as to proceeding with the ordered work and filing a written protest within the time therein specified.

Contractor Acceptance by		
Signature	(Print name and title) EDMUNDO A. PUCHI, TREASURER	Date 10/21/08

DIST	COUNTY	ROUTE	KILOMETER POST TOTAL PROJECT	SHEET No.	TOTAL SHEETS
04	Ala	80	1.6/2.7	472 R1	643

REGISTERED ELECTRICAL ENGINEER 05/15/06 DATE

1-29-07
PLANS APPROVAL DATE

REGISTERED PROFESSIONAL ENGINEER JENS ERLINGSSON No. 8249 EXP. 9/30/08 ELECTRICAL STATE OF CALIFORNIA

PB POWER, Inc.
A Parsons Brinckerhoff Company
303 Second St., Suite 700N
San Francisco, CA 94107-1317

The State of California or its officers or agents shall not be responsible for the accuracy or completeness of electronic copies of this plan sheet.

To get to the caltrans web site, go to http://www.dot.ca.gov

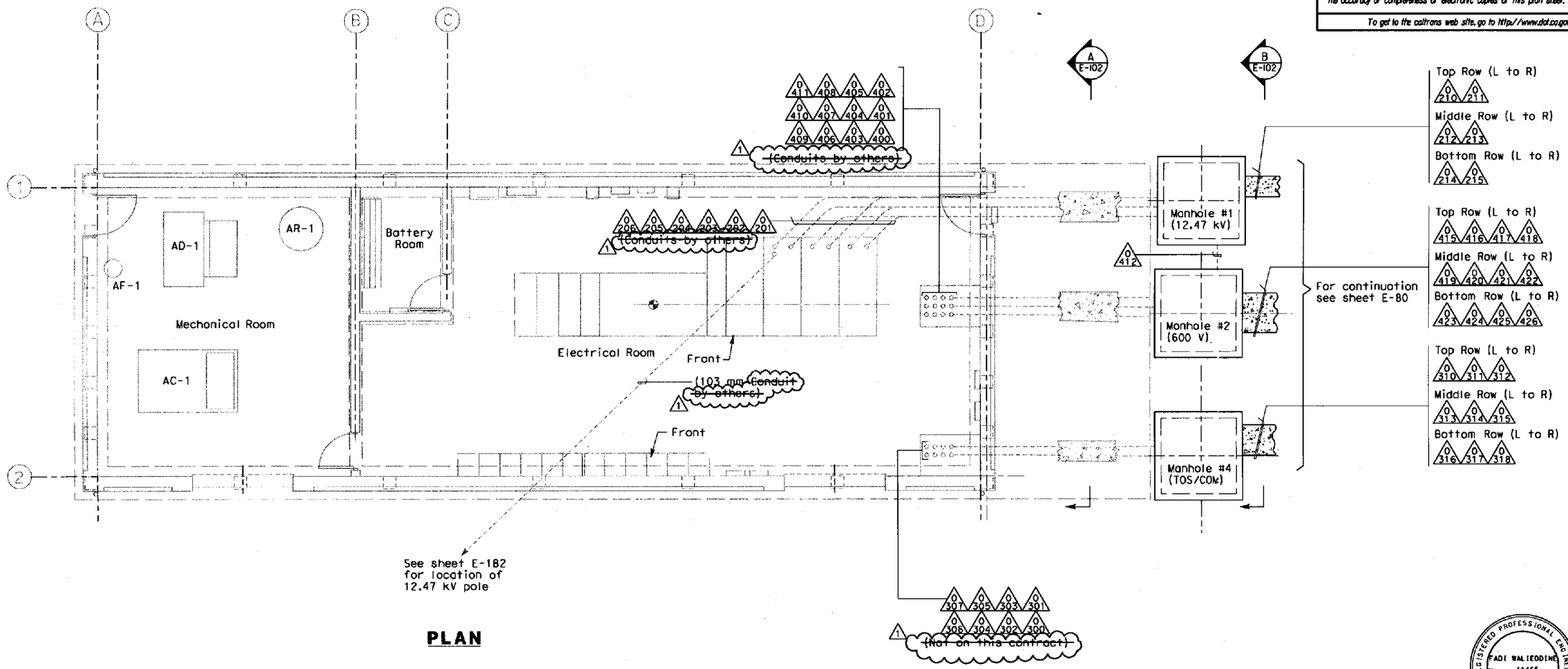

PLAN

NOTES:

1. References:
   - For manhole plans and sections, see sheets starting at E-111.
   - For typical manhole and duct bank details, see sheets starting at E-106.
   - For conduit and cable tray schedules, see sheets starting at E-224.
   - For conduit stub-ups in the Mole Substation, see sheet AE-5.

MARK	DATE	DESCRIPTIONS	REV	CK
1	9/26/08	DELETED REFERENCE TO OTHER CONTRACT	NK	RG

REVISIONS

CONTRACT CHANGE ORDER NO. 69
SHEET 2 OF 2 04-0120L4

REGISTERED PROFESSIONAL ENGINEER FADI WALIEDDINE No. 11465 EXP. 12/31/2009 ELECTRICAL STATE OF CALIFORNIA

FOR REVISION ONLY

DETAILS
UNDERGROUND AND ROADWAY AT-GRADE MOLE SUBSTATION CONDUIT

SCALE: 1:50

E-101

CALCULATED/DESIGNED BY	FK	DATE 2/06	REVISED BY
CHECKED BY	AB	2/06	DATE REVISED

DESIGN OVERSIGHT
BEHZAD GOLEMOHAMMADI

STATE OF CALIFORNIA - DEPARTMENT OF TRANSPORTATION
Caltrans

LAST REVISION 00-00-00
DATE PLOTTED => 9/26/2008
TIME PLOTTED => 11:40:51 AM

FOR REDUCED PLANS ORIGINAL SCALE IS IN MILLIMETERS 0 20 40 60 80

DGN FILE =>T:\13103\MS\pse\OTD-Contract 1\CCO\Electrical\CCO-note removal\40120luo101R1.dgn
USERNAME =>reyesl

CU 04251 EA 0120L1

STATE OF CALIFORNIA - DEPARTMENT OF TRANSPORTATION

CONTRACT CHANGE ORDER MEMORANDUM

DATE: 9/25/2008 Page 1 of 1

TO: AMER BATA / BEN GHAFGHAZI	FILE: E.A. 04 - 0120L4
FROM: BEN GHAFGHAZI	CO-RTE-PM ALA-80-1.6/2.7
	FED. NO. NO FED AID
CCO#: 69 SUPPLEMENT#: 0 Category Code: CBPC	CONTINGENCY BALANCE (incl. this change) $14,040,950.20
COST: $55,670.25 INCREASE ☑ DECREASE ☐	HEADQUARTERS APPROVAL REQUIRED? ☐ YES ☑ NO
SUPPLEMENTAL FUNDS PROVIDED: $0.00	IS THIS REQUEST IN ACCORDANCE WITH ENVIRONMENTAL DOCUMENTS? ☑ YES ☐ NO
CCO DESCRIPTION: Substation conduit	**PROJECT DESCRIPTION:** Construct bridge, roadway, building and electrical system.

Original Contract Time:	Time Adj. This Change:	Previously Approved CCO Time Adjustments:	Percentage Time Adjusted: (including this change)	Total # of Unreconciled Deferred Time CCO(s): (including this change)
810 Day(s)	0 Day(s)	0 Day(s)	0 %	6

THIS CHANGE ORDER PROVIDES FOR:

Installation of duct bank and conduits within limits of Mole Substation building as shown on sheet 2 of 2 of this CCO. Reference to "Conduits by Others" and "Not on this Contract" have been removed from Sheet E-101. All work shall be in accordance with Section 10-3, "Signals, Lighting and Electrical Systems," of the Special Provisions and Section 86, "Signals, Lighting and Electrical Systems," of the Standard Specifications.

This change is necessary because the work within the limits of the Mole Substation is not included in any contract item and is delineated in the original contract plans to be either performed "by others" or "not on this contract." The work is required to be performed on this contract since the duct banks and conduits must be in place prior to construction of the substation building. There is not another contract in the area to perform the work.

For this work, the contractor will be paid the sum of $55,670.25 which can be financed from the contingency fund. A detailed cost analysis is on file in the Resident Engineer's office.

This work has been discussed and concurred with Parviz Boozarpour of Electrical Design and Jaime Gutierrez of Project Development. Maintenance concurrence is not necessary because this CCO is for payment issues. The work was already designed and intended to be a part of this contract.

No adjustment of contract time is warranted since this change does not affect the controlling operation.

CONCURRED BY:			
Construction Engineer:	Ben Ghafghazi	Date	10/9/08
Bridge Engineer:		Date	
Project Engineer:	Jaime Gutierrez	Date	10/8/08
Project Manager:		Date	
FHWA Rep.:		Date	
Environmental:		Date	
Other (specify):	Parviz Boozarpour, Elec. Design	Date	10/8/08
Other (specify):		Date	
District Prior Approval By:		Date	
HQ (Issue Approve) By:		Date	
Resident Engineer's Signature		Date	10/9/08

ESTIMATE OF COST

	THIS REQUEST	TOTAL TO DATE
ITEMS	$0.00	$0.00
FORCE ACCOUNT	$0.00	$0.00
AGREED PRICE	$55,670.25	$55,670.25
ADJUSTMENT	$0.00	$0.00
TOTAL	$55,670.25	$55,670.25

FEDERAL PARTICIPATION

☐ PARTICIPATING ☐ PARTICIPATING IN PART ☑ NONE
☐ NON-PARTICIPATING (MAINTENANCE) ☐ NON-PARTICIPATING

FEDERAL SEGREGATION (if more than one Funding Source or P.I.P. type)
☑ CCO FUNDED PER CONTRACT ☐ CCO FUNDED AS FOLLOWS

FEDERAL FUNDING SOURCE	PERCENT

ADA Notice: For individuals with sensory disabilities, this document is available in alternate formats. For information call: (916) 654-6410 or TDD (916) 654-3880 or write Records and Forms Management, 1120 N Street, MS-89, Sacramento, CA 95814.

CONTRACT CHANGE ORDER

Change Requested by: Engineer

CCO: 70	Suppl. No. 0	Contract No. 04 - 0120L4	Road ALA-80-1.6/2.7	FED. AID LOC.: NO FED AID

To: **M C M CONSTRUCTION INC**

You are directed to make the following changes from the plans and specifications or do the following described work not included in the plans and specifications for this contract. ***NOTE: This change order is not effective until approved by the Engineer.***

Description of work to be done, estimate of quantities and prices to be paid. (Segregate between additional work at contract price, agreed price and force account.) Unless otherwise stated, rates for rental of equipment cover only such time as equipment is actually used and no allowance will be made for idle time. This last percentage shown is the net accumulated increase or decrease from the original quantity in the Engineer's Estimate.

Extra Work at Lump Sum:

Provide labor, equipment, and material as necessary to install infrastructure and modify circuits for future light pipe as shown on sheets 2 of 36 through 36 of 36 of this CCO. All work shall be in accordance with Section 10-3, "Signals, Lighting and Electrical Systems," of the Special Provisions and Section 86, "Signals, Lighting and Electrical Systems," of the Standard Specifications. For this work the contractor will be paid the sum of $262,002.02. This sum constitutes full compensation, including markups, for this change.

Estimated cost of Extra Work at Lump Sum $262,002.02

Consideration of a time adjustment will be deferred until completion of the work specified herein. Determination of a commensurate time extension will be made in accordance with Section 10-1.14, "Progress Schedule (Critical Path Method)," of the Special Provisions and Section 8-1.07, "Liquidated Damages," of the Standard Specifications.

Estimated Cost: **Increase** ☑ **Decrease** ☐ **$262,002.02**

By reason of this order the time of completion will be adjusted as follows: Deferred

Submitted by

Signature	Resident Engineer BEN GHAFGHAZI	Date 12/24/08

Approval Recommended by

Signature	Construction Manager Amer Bata	Date 12/24/08

Engineer Approval by

Signature	Construction Manager Amer Bata	Date 1/12/09

We the undersigned contractor, have given careful consideration to the change proposed and agree, if this proposal is approved, that we will provide all equipm furnish the materials, except as may otherwise be noted above, and perform all services necessary for the work above specified, and will accept as full paymer therefor the prices shown above.

NOTE: If you, the contractor, do not sign acceptance of this order, your attention is directed to the requirements of the specifications as to proceeding with the ordered work and filing a written protest within the time therein specified.

Contractor Acceptance by

Signature	(Print name and title) EDMUNDO A. PUCHI, TREASURER	Date 1/7/09

DIST	COUNTY	ROUTE	KILOMETER POST TOTAL PROJECT	SHEET NO	TOTAL SHEETS
04	Ala	80	1.6/2.7	370 R1	643

REGISTERED ELECTRICAL ENGINEER 05/15/06 DATE

1-29-07
PLANS APPROVAL DATE

REGISTERED PROFESSIONAL ENGINEER JENS ERLINGSSON No. 8249 Exp. 9/30/08 ELECTRICAL STATE OF CALIFORNIA

PB POWER, Inc.
A Parsons Brinckerhoff Company
303 Second St., Suite 700N
San Francisco, CA 94107-1317

The State of California or its officers or agents shall not be responsible for the accuracy or completeness of electronic copies of this plan sheet.

To get to the Caltrans web site, go to: http://www.dot.ca.gov

Caltrans Metric

DRAWING TITLE	DRAWING NO.
ELECTRICAL SHEET INDEX NO. 1	E-1
ELECTRICAL SHEET INDEX NO. 2	E-2
ELECTRICAL SHEET INDEX NO. 3	E-3
ELECTRICAL KEY MAP	E-4
ELECTRICAL SYMBOLS	E-5
ELECTRICAL SYMBOLS AND ABBREVIATIONS	E-6
ELECTRICAL NOTES AND ABBREVIATIONS	E-7, E-8
HIGH MAST LIGHTING SYMBOLS AND NOTES	E-9
ROADWAY AND GIRDER LEVEL WESTBOUND (LIGHTING AND ELECTRICAL SYSTEMS)	E-10 TO E-15
DETAILS ROADWAY AND GIRDER LEVEL WESTBOUND DEMONSTRATION LIGHTING POLE	E-15A
DETAILS ROADWAY AND GIRDER LEVEL WESTBOUND DEMONSTRATION LIGHTING POLE	E-15B
DETAILS ROADWAY AND GIRDER LEVEL WESTBOUND TYPICAL FUTURE ROADWAY LIGHTING POLE ANCHORAGE	E-16
DETAILS ROADWAY AND GIRDER LEVEL WESTBOUND TYPICAL LIGHT PIPE INSTALLATION 1	E-17
DETAILS ROADWAY AND GIRDER LEVEL WESTBOUND TYPICAL LIGHT PIPE INSTALLATION 2	E-18
DETAILS ROADWAY AND GIRDER LEVEL WESTBOUND TYPICAL LIGHT PIPE INSTALLATION 3	E-19
DETAILS ROADWAY AND GIRDER LEVEL WESTBOUND SERVICE PLATFORM #22W	E-20
DETAILS ROADWAY AND GIRDER LEVEL WESTBOUND SERVICE PLATFORM #23W	E-21
DETAILS ROADWAY AND GIRDER LEVEL WESTBOUND SERVICE PLATFORM SECTIONS	E-22
DETAILS ROADWAY AND GIRDER LEVEL WESTBOUND HINGE EW INTERFACE SKYWAY AND OAKLAND APPROACH STRUCTURES	E-23
DETAILS ROADWAY AND GIRDER LEVEL WESTBOUND GIRDER CONDUIT INSTALLATION	E-24 TO E-28
DETAILS ROADWAY AND GIRDER LEVEL WESTBOUND LIGHT PIPE CONDUIT LOCATION	E-28A TO E28C
DETAILS ROADWAY AND GIRDER LEVEL WESTBOUND HINGE FW CONDUIT INSTALLATION	E-29
DETAILS ROADWAY AND GIRDER LEVEL WESTBOUND PIER CONDUIT INSTALLATION	E-30 TO 31
DETAILS ROADWAY AND GIRDER LEVEL WESTBOUND EMBEDDED CONCRETE INSERT CHANNEL	E-32 TO E-34
DETAILS ROADWAY AND GIRDER LEVEL WESTBOUND GIRDER CONDUIT SUPPORTS	E-35
DETAILS ROADWAY AND GIRDER LEVEL WESTBOUND TYPICAL CONDUIT INSTALLATION AND SECTIONS	E-36
DETAILS ROADWAY AND GIRDER LEVEL WESTBOUND TYPICAL BARRIER PULL BOX AND CONDUIT LOCATIONS	E-37

DRAWING TITLE	DRAWING NO.
ROADWAY AND GIRDER LEVEL WESTBOUND LIGHTING POLE AND CONDUIT LOCATIONS	E-38
DETAILS ROADWAY AND GIRDER LEVEL WESTBOUND CALL BOX CONDUIT LOCATIONS	E-39
DETAILS ROADWAY AND GIRDER LEVEL WESTBOUND GIRDER SECTIONS	E-40 TO E-41
DETAILS ROADWAY AND GIRDER LEVEL WESTBOUND GIRDER GROUNDING SYSTEM	E-42
DETAILS ROADWAY AND GIRDER LEVEL WESTBOUND TYPICAL GROUNDING INSTALLATION	E-43
DETAILS ROADWAY AND GIRDER LEVEL WESTBOUND TYPICAL PULL BOX SCHEDULES	E-44
DETAILS ROADWAY AND GIRDER LEVEL WESTBOUND UP-171 PANEL SCHEDULE	E-45
DETAILS ROADWAY AND GIRDER LEVEL WESTBOUND UP-172 PANEL SCHEDULE	E-46
DETAILS ROADWAY AND GIRDER LEVEL WESTBOUND 480 V ROADWAY LIGHTING WIRING DIAGRAM	E-47
DETAILS ROADWAY AND GIRDER LEVEL WESTBOUND 480 V ROADWAY LIGHTING WIRING DIAGRAM	E-48
DETAILS ROADWAY AND GIRDER LEVEL WESTBOUND 480 V LIGHT PIPE WIRING DIAGRAM	E-48A, E-48B
ROADWAY AND GIRDER LEVEL EASTBOUND (LIGHTING AND ELECTRICAL SYSTEMS)	E-49 TO E-52
DETAILS ROADWAY AND GIRDER LEVEL EASTBOUND SERVICE PLATFORM #22E	E-53
DETAILS ROADWAY AND GIRDER LEVEL EASTBOUND TYPICAL PLATFORM SECTIONS	E-54
DETAILS ROADWAY AND GIRDER LEVEL EASTBOUND TYPICAL BIKE PATH PLAN AND ELEVATION	E-55
DETAILS ROADWAY AND GIRDER LEVEL EASTBOUND TYPICAL BIKE PATH LIGHTING DETAILS	E-56
DETAILS ROADWAY AND GIRDER LEVEL EASTBOUND TYPICAL BIKE PATH LIGHT INSTALLATION	E-57
DETAILS ROADWAY AND GIRDER LEVEL EASTBOUND TYPICAL CALL BOX PLAN AND SECTIONS	E-58
DETAILS ROADWAY AND GIRDER LEVEL EASTBOUND HINGE EE INTERFACE SKYWAY AND OAKLAND APPROACH STRUCTURES	E-59
DETAILS ROADWAY AND GIRDER LEVEL EASTBOUND GIRDER CONDUIT INSTALLATION	E-60 TO E-62
DETAILS ROADWAY AND GIRDER LEVEL EASTBOUND LIGHT PIPE CONDUIT LOCATION	E-62A, E-62B
DETAILS ROADWAY AND GIRDER LEVEL EASTBOUND HINGE FE CONDUIT INSTALLATION	E-63
DETAILS ROADWAY AND GIRDER LEVEL EASTBOUND GIRDER CONDUIT INSTALLATION	E-64

DRAWING TITLE	DRAWING NO.
DETAILS ROADWAY AND GIRDER LEVEL EASTBOUND EMBEDDED CONCRETE INSERT CHANNEL	E-65 TO E-66
DETAILS ROADWAY AND GIRDER LEVEL EASTBOUND GIRDER CONDUIT SUPPORTS	E-67
DETAILS ROADWAY AND GIRDER LEVEL EASTBOUND TYPICAL CONDUIT INSTALLATION AND SECTIONS	E-68
DETAILS ROADWAY AND GIRDER LEVEL EASTBOUND GIRDER SECTIONS	E-69 TO E-70
DETAILS ROADWAY AND GIRDER LEVEL EASTBOUND TYPICAL BARRIER PULL BOX AND CONDUIT LOCATIONS	E-71
DETAILS ROADWAY AND GIRDER LEVEL EASTBOUND LIGHTING POLE CONDUIT LOCATIONS	E-72
DETAILS ROADWAY AND GIRDER LEVEL EASTBOUND CALL BOX CONDUIT LOCATIONS	E-73
DETAILS ROADWAY AND GIRDER LEVEL EASTBOUND GIRDER GROUNDING PLAN	E-74
DETAILS ROADWAY AND GIRDER LEVEL EASTBOUND TYPICAL GROUNDING INSTALLATION	E-75
DETAILS ROADWAY AND GIRDER LEVEL EASTBOUND LIGHT POLE LOCATION AND BIKE PATH FIXTURE SCHEDULE	E-76
DETAILS ROADWAY AND GIRDER LEVEL EASTBOUND TYPICAL PULL BOX SCHEDULES	E-77
DETAILS ROADWAY AND GIRDER LEVEL EASTBOUND UP-271 PANEL SCHEDULE	E-78
DETAILS ROADWAY AND GIRDER LEVEL EASTBOUND LP-281 PANEL SCHEDULE	E-79

Contract No. 04-0120L4
Page 2 of 36
CCO No. 70 Suppl. No.
Contractor MCM
Res. Engr. B. Ghafghazi
10/16/08

ELECTRICAL SHEET INDEX NO.1

NO SCALE

E-1

STATE OF CALIFORNIA - DEPARTMENT OF TRANSPORTATION
Caltrans

DESIGN OVERSIGHT
BEHZAD GOLEMOHAMMADI

CALCULATED/DESIGNED BY AB
CHECKED BY FK
DATE 2/06
REVISED BY
DATE REVISED

LAST REVISION 00-00-00
DATE PLOTTED => 8/29/2008
TIME PLOTTED => 10:52:00 AM

FOR REDUCED PLANS ORIGINAL 0 20 40 60 80

DGN FILE =>T:\13103\MS\pse\OTD-Contract 1\CCO\Electrical\00 Drawing Index\401201uc001.dgn

DRAWING TITLE	DRAWING NO.
DETAILS SCADA REMOTE TERMINAL UNIT SYSTEM TEL-22E TERMINAL CONNECTION DIAGRAM	E-168
DETAILS SCADA REMOTE TERMINAL UNIT SYSTEM CABLE BLOCK DIAGRAMS	E-169
CALL BOX SYSTEM (LOCATIONS)	E-170
DETAILS CALL BOX SYSTEM SCHEDULE	E-171
DETAILS CALL BOX SYSTEM CALL BOX WIRING DIAGRAM	E-172
STRONG MOTION DETECTION SYSTEM (GENERAL PLAN)	E-173
DETAILS STRONG MOTION DETECTION SYSTEM GIRDER LEVEL PARTIAL PLANS	E-174 TO E-176
DETAILS STRONG MOTION DETECTION SYSTEM GIRDER SECTIONS	E-177
DETAILS STRONG MOTION DETECTION SYSTEM PLAN AT-GRADE	E-178
DETAILS STRONG MOTION DETECTION SYSTEM FREE FIELD AND DOWNHOLE SENSORS	E-179
DETAILS STRONG MOTION DETECTION SYSTEM SCHEDULES	E-180
DETAILS STRONG MOTION DETECTION SYSTEM SENSOR AND RECORDER ENCLOSURES	E-181
TEMPORARY UNDERGROUND AND ROADWAY AT-GRADE (LIGHTING AND ELECTRICAL SYSTEMS 12.47 KV FEEDER)	E-182
TEMPORARY UNDERGROUND AND (ROADWAY AT-GRADE LIGHTING AND ELECTRICAL SYSTEMS)	E-183 TO E-189
TEMPORARY UNDERGROUND AND ROADWAY AT-GRADE (LIGHTING AND ELECTRICAL SYSTEMS EXISTING NORTH SIDE)	E-190 TO E-192
DETAILS TEMPORARY UNDERGROUND AND ROADWAY AT-GRADE PARTIAL PLAN	E-193
DETAILS TEMPORARY UNDERGROUND AND ROADWAY AT GRADE LIGHTING AND ELECTRICAL SYSTEMS EXISTING NORTH SIDE ELECTRICAL PLANS	E-194
DETAILS TEMPORARY UNDERGROUND AND ROADWAY AT-GRADE POLE LINE ELEVATIONS	E-195
DETAILS TEMPORARY UNDERGROUND AND ROADWAY AT-GRADE SERVICE ENCLOSURE PANEL SCHEDULE	E-196
DETAILS TEMPORARY UNDERGROUND AND ROADWAY AT-GRADE EXISTING SCADA/TELEPHONE AND 40/C CABLE ASSIGNMENT	E-197

DRAWING TITLE	DRAWING NO.
TEMPORARY UNDERGROUND AND ROADWAY AT-GRADE (HIGH MAST LIGHTING)	E-198 TO E-199
DETAILS TEMPORARY UNDERGROUND AND ROADWAY AT-GRADE TEMPORARY WOOD POLE	E-200
DETAILS TEMPORARY UNDERGROUND AND ROADWAY AT-GRADE 12.kV AND SCADA/TELEPHONE BLOCK DIAGRAMS	E-201
TEMPORARY UNDERGROUND AND ROADWAY AT-GRADE FIELD ELEMENTS LOCATION	E-202
DETAILS TEMPORARY UNDERGROUND AND ROADWAY AT-GRADE - GENERAL PACKET RADIO SYSTEM WIRELESS MODEM INSTALLATION	E-203
DETAILS TRAFFIC OPERATIONS SYSTEM PREFORMED LOOP DETECTOR STATION INSTALLATION	E-204
TRAFFIC OPERATIONS SYSTEM (FIELD STATIONS LOCATION)	E-205
NOT USED	E-206 TO E-223
DETAILS CONDUIT AND TRAY SCHEDULE	E-224 TO E-228
DETAILS CONDUIT AND TRAY SCHEDULE	E-228A
DETAILS ROADWAY LIGHTING ASSEMBLY	E-229, E-230
DETAILS CONDUIT AND TRAY SCHEDULE	E-230A
DETAILS CONDUIT AND TRAY SCHEDULE	E-231 TO E-242
DETAILS ROADWAY LIGHTING ASSEMBLY	E-243 TO E-247

Caltrans Metric

DIST	COUNTY	ROUTE	KILOMETER POST TOTAL PROJECT	SHEET No.	TOTAL SHEETS
04	Ala	80	1.6/2.7	372 R1	643

REGISTERED ELECTRICAL ENGINEER 05/15/06 DATE

1-29-07
PLANS APPROVAL DATE

REGISTERED PROFESSIONAL ENGINEER JENS ERLINGSSON No. 8249 EXP. 9/30/08 ELECTRICAL STATE OF CALIFORNIA

PB POWER, Inc.
A Parsons Brinckerhoff Company
303 Second St., Suite 700N
San Francisco, CA 94107-1317

The State of California or its officers or agents shall not be responsible for the accuracy or completeness of electronic copies of this plan sheet.

To get to the Caltrans web site, go to: http://www.dot.ca.gov

Contract No. 04-0120L4
Page 3 of 36
CCO No. 70 Suppl. No.
Contractor MCM
Res. Engr. B. Ghafghazi
10/16/08

ELECTRICAL SHEET INDEX NO.3

NO SCALE

E-3

REVISED BY	DATE REVISED

CALCULATED/DESIGNED BY	DATE 2/06
AB	2/06
CHECKED BY	
FK	

DESIGN OVERSIGHT
BEHZAD GOLEMOHAMMADI

STATE OF CALIFORNIA - DEPARTMENT OF TRANSPORTATION
Caltrans

LAST REVISION 00-00-00
DATE PLOTTED => 8/29/2008
TIME PLOTTED => 10:52:40 AM

FOR REDUCED PLANS ORIGINAL 0 20 40 60 80

DGN FILE =>T:\13103\MS\pse\OTD-Contract 1\CCO\Electrical\00 Drawing Index\401201uc003.dgn
USERNAME =>rcrowell

CU 04351 EA 0120L1

DIST	COUNTY	ROUTE	KILOMETER POST TOTAL PROJECT	SHEET NO	TOTAL SHEETS
04	Ala	80	1.6/2.7	379R2	643

REGISTERED ELECTRICAL ENGINEER 05/15/08 DATE

1-29-07
PLANS APPROVAL DATE

REGISTERED PROFESSIONAL ENGINEER JENS ERLINGSSON No. 8249 Exp. 9/30/08 ELECTRICAL STATE OF CALIFORNIA

PB POWER, Inc.
A Parsons Brinckerhoff Company
303 Second St., Suite 700N
San Francisco, CA 94107-1317

The State of California or its officers or agents shall not be responsible for the accuracy or completeness of electronic copies of this plan sheet.

To get to the Caltrans web site, go to: http://www.dot.ca.gov

Caltrans Metric

SHEET NOTES:

1. ~~For Call Box conduit installation, see sheet E-39.~~
2. The Demonstration Roadway Lighting Assembly is to be powered from the Skyway Westbound Midspan Substation. The 480 V conductors + ground from the Midspan Substation to the pull box (PB-LTG), adjacent to the lighting assembly, have been installed under a different contract. The Contractor shall splice the existing 480 V + ground conductors in the two PB-LTG pull boxes nearest the lighting assembly to provide for conductor continuity from the Midspan Substation to the lighting assembly. In addition, the Contractor shall install 2#10 + #10 ground conductors from the lighting assembly to the nearest PB-LTG pull box and splice the conductors to the existing conductors in the PB-LTG.
3. Except for the Demonstration Roadway Lighting assembly.
4. Down, conduit stub-out for future light pipe, See sheet E-28A.

NOTES:

1. References:
   - For typical details and locations of conduit connections to light poles, barrier outlet boxes, call boxes and CMS, see sheets E-37 and E-38.
   - For types of pull boxes, splice boxes and enclosures, see sheet E-44.
   - ~~For Call Box schedule and wiring diagram, see sheets E-170 to E-172.~~
   - For light pole location, see sheet E-38.
   - For 480 V roadway lighting wiring diagram, see sheet E-47 and E-48.
   - For conduit and cable tray schedules, see sheets starting at E-224.
   - For details of Roadway Lighting Assembly see sheets starting at E-243.
   - For installation of conduits inside demonstration lighting pole, see sheets E-15A and E-15B.

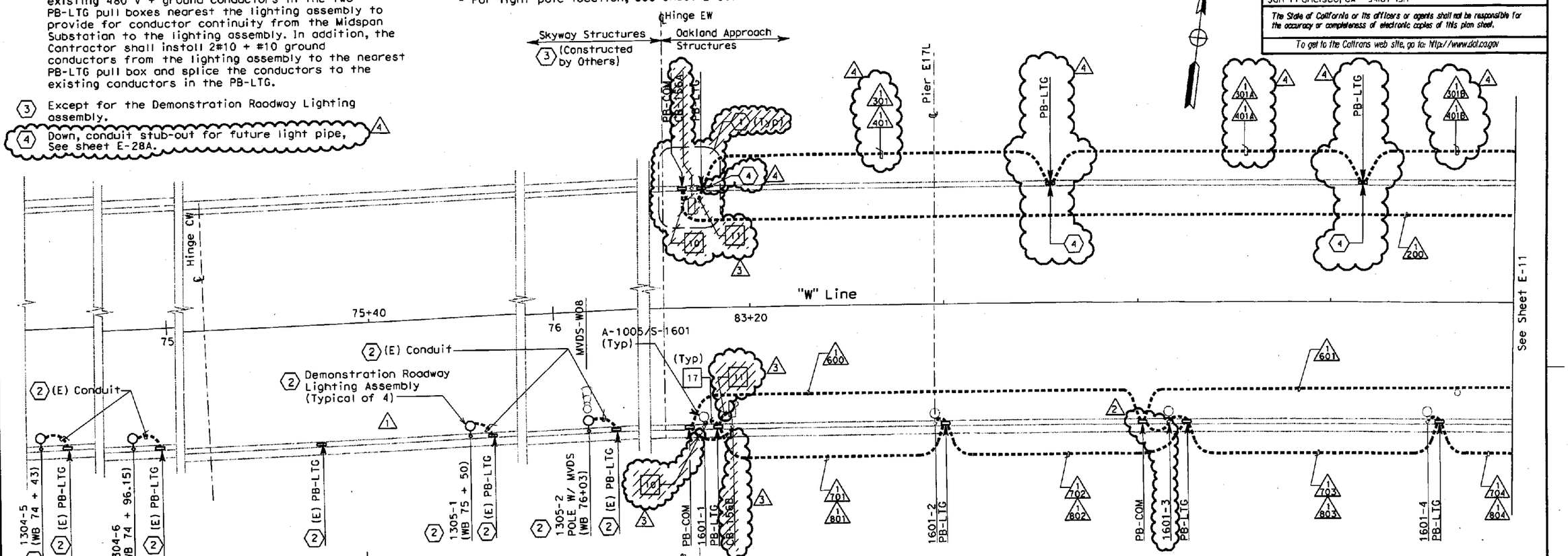

ROADWAY CONDUIT PLAN

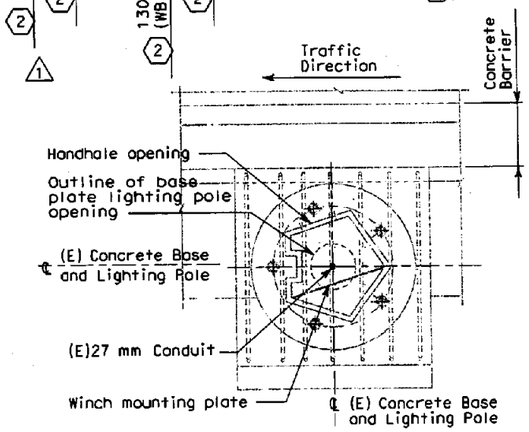

CONDUIT STUB UP PLAN

FOR 20 METER HIGH LIGHTING POLES (1304-5, 1304-6 AND 1305-1)
NO SCALE

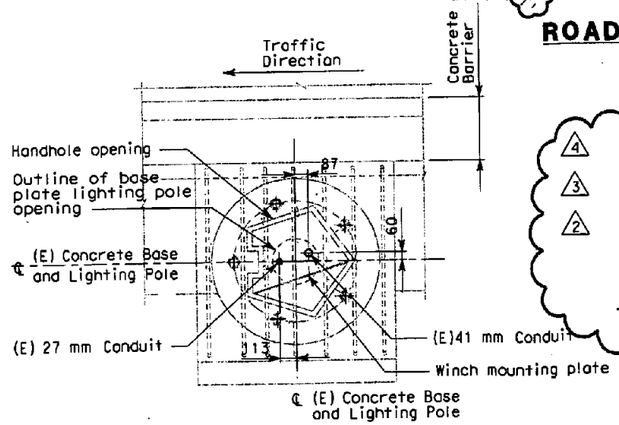

CONDUIT STUB UP PLAN

20 METER HIGH LIGHTING POLE (1305-2) WITH MVDS
NO SCALE

MARK	DATE	DESCRIPTIONS	REV	CK	CCO NO.
4	8/29/08	Added conduit nos. 1301A, 1301B, 1401A, 1401B, PB-LTG. sheet note 4, Re-routed conduits 1301 and 1401	EJL	ECR	LIGHT PIPE
3	8/29/08	Deleted CB-156A, CB-156B, Project Notes 10 and 11, Sheet Note 1 and Call Box Reference Note.	EJL	ECR	18S1
2	8/29/08	Added Conduit To Pole 1601-3	EJL	ECR	Ltg. Pole Base
1	1/9/08	Added Demonstration Pole 1304-5	EJL	SE	39

REVISIONS

REGISTERED PROFESSIONAL ENGINEER FADI MALIEDDINE No. 11465 Exp. 12/31/2009 ELECTRICAL STATE OF CALIFORNIA

REGISTERED PROFESSIONAL ENGINEER S. A. ESTOOLE, JR. No. E-10151 Exp. 12/31/2009 ELECTRICAL STATE OF CALIFORNIA

CONTRACT CHANGE ORDER NO. 70
SHEET 4 OF 36 04-0120L4 10/16/08

ROADWAY AND GIRDER LEVEL WESTBOUND
(LIGHTING AND ELECTRICAL SYSTEMS)

SCALE: 1:200

THIS PLAN IS ACCURATE FOR ELECTRICAL WORK ONLY.

E-10

STATE OF CALIFORNIA - DEPARTMENT OF TRANSPORTATION
Caltrans

DESIGN OVERSIGHT: BEHZAD GOLEMOHAMMADI

CALCULATED/DESIGNED BY: FK DATE 2/06
CHECKED BY: AB 2/06
REVISED BY / DATE REVISED

LAST REVISION 00-00-00
DATE PLOTTED => 8/28/2008
TIME PLOTTED => 11:56:40 AM

FOR REDUCED PLANS ORIGINAL 0 20 40 60 80

DGN FILE =>T:\13103\MS\pse\OTD-Contract 1\CCO\Electrical\CCO-Light Pipe\401201uc010R2.dgn

DIST	COUNTY	ROUTE	KILOMETER POST TOTAL PROJECT	SHEET No.	TOTAL SHEETS
04	Ala	80	1.6/2.7	380R1	643

REGISTERED ELECTRICAL ENGINEER 05/15/08 DATE

1-29-07
PLANS APPROVAL DATE

REGISTERED PROFESSIONAL ENGINEER JENS ERLINGSSON No. 8249 EXP. 9/30/08 ELECTRICAL STATE OF CALIFORNIA

PB POWER, Inc.
A Parsons Brinckerhoff Company
303 Second St., Suite 700N
San Francisco, CA 94107-1317

The State of California or its officers or agents shall not be responsible for the accuracy or completeness of electronic copies of this plan sheet.

To get to the Caltrans web site, go to: http://www.dot.ca.gov

Caltrans Metric

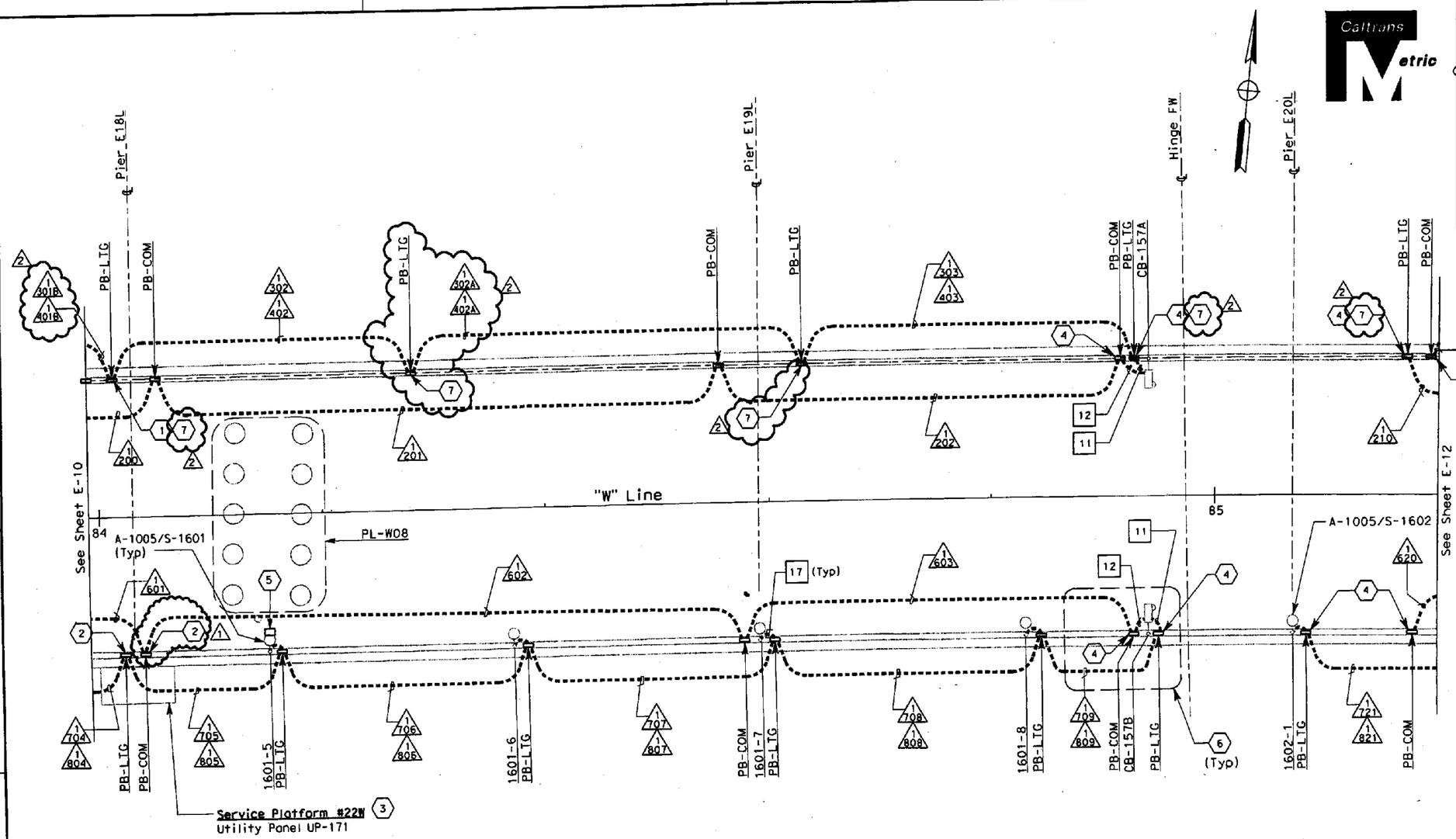

REGISTERED PROFESSIONAL ENGINEER FADI WALI EDDINE No. 11465 EXP. 12/31/2009 ELECTRICAL STATE OF CALIFORNIA

SHEET NOTES:

1. Conduit down into Girder Level. See sheet E-14.
2. Conduit down into Girder Level. See sheets E-14 and E-25.
3. For Service Platform details, see sheet E-20.
4. Conduit down into Girder Level. See sheets E-14 and E-26.
5. Preformed Loops splice box PB-4D.
6. For Call Box conduit installation, see sheet E-39.
7. Down, Conduit stub-out for future light pipe, see sheets E-28A and E-28B.

NOTES:

1. References:
   - For typical details and locations of conduit connections to light poles, barrier outlet boxes, call boxes, CMS, and MVDS, see sheets E-37 and E-38.
   - TOS equipment is shown for conduit routing only. For typical details of TOS controller and devices, see sheets starting at E-204.
   - For types of pull boxes, splice boxes and enclosures, see sheet E-44.
   - For call box schedule and wiring diagram, see sheets E-170 to E-172.
   - For light pole location, see sheet E-38.
   - For 480 V roadway lighting wiring diagram, see sheet E-47 and E-48.
   - For conduit and cable tray schedules, see sheets starting at E-224.

MARK	DATE	DESCRIPTIONS	REV	CK	CCO NO.
2	8/29/08	Added conduit nos 1301B, 1302A, 1401B, 1402A, PB-LTG, sheet notes 7. Re-routed conduits 1301, 1401, 1302 and 1402.	EJL	ECR	Light Pipe
1	8/29/08	Added 2-41C, 4403A & 4404A from PB-Com to Girder Level	EJL	ECR	Light Pole Base

REVISIONS

CONTRACT CHANGE ORDER NO. 70
SHEET 5 OF 36 04-0120L4 10/16/08

ROADWAY CONDUIT PLAN

ROADWAY AND GIRDER LEVEL WESTBOUND
(LIGHTING AND ELECTRICAL SYSTEMS)

SCALE: 1:200

E-11

CALCULATED/ DESIGNED BY	FK	DATE 2/06	REVISED BY	DATE REVISED
CHECKED BY	AB	2/06		

DESIGN OVERSIGHT
BEHZAD GOLEMOHAMMADI

STATE OF CALIFORNIA - DEPARTMENT OF TRANSPORTATION
Caltrans

LAST REVISION 00-00-00
DATE PLOTTED => 8/28/2008
TIME PLOTTED => 11:56:41 AM

THIS PLAN IS ACCURATE FOR ELECTRICAL WORK ONLY.

FOR REDUCED PLANS ORIGINAL 0 20 40 60 80

DGN FILE =>t:\13103\ms\pse\otd-contract 1\cco\electrical\cco-light pipe\40120lua011r1.dgn

DIST	COUNTY	ROUTE	KILOMETER POST TOTAL PROJECT	SHEET NO	TOTAL SHEETS
04	Ala	80	1.6/2.7	381 R1	643

REGISTERED ELECTRICAL ENGINEER 05/15/06 DATE

1-29-07
PLANS APPROVAL DATE

REGISTERED PROFESSIONAL ENGINEER JENS ERLINGSSON No. 8249 Exp. 9/30/08 ELECTRICAL STATE OF CALIFORNIA

PB POWER, Inc.
A Parsons Brinckerhoff Company
303 Second St., Suite 700N
San Francisco, CA 94107-1317

The State of California or its officers or agents shall not be responsible for the accuracy or completeness of electronic copies of this plan sheet.

To get to the Caltrans web site, go to: http://www.dot.ca.gov

Caltrans Metric

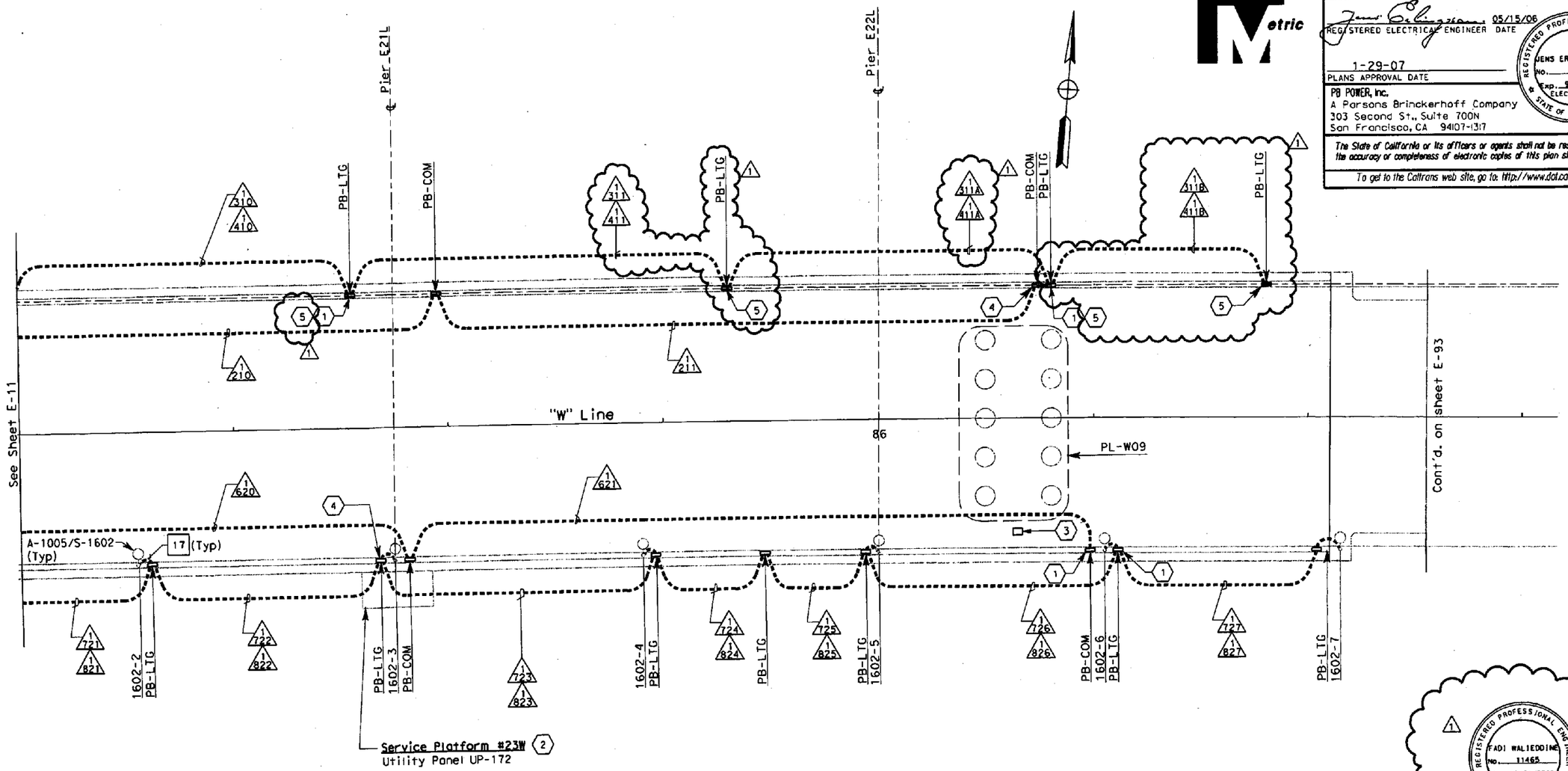

REGISTERED PROFESSIONAL ENGINEER FADI WALIEDDINE No. 11465 Exp. 12/31/2009 ELECTRICAL STATE OF CALIFORNIA

ROADWAY CONDUIT PLAN

SHEET NOTES:

1. Conduit down into Girder Level. See sheets E-15 and E-28.
2. For Service Platform details, see sheet E-21.
3. Preformed Loops Splicebox PB-4D.
4. Conduit down into Girder Level. See sheet E-15 and E-27.
5. Down, Conduit stub-out for future light pipe, see sheet E-28C.

NOTES:

1. References:
   - For typical details and locations of conduit connections to light poles, barrier outlet boxes, call boxes, CMS and MVDS, see sheets E-37 and E-38.
   - TOS equipment is shown for conduit routing only. For typical details of TOS controller and devices, see sheets starting at E-204.
   - For types of pull boxes, splice boxes and enclosures, see sheet E-44.
   - For call box schedule and wiring diagram, see sheets E-170 to E-172.
   - For light pole location, see sheet E-38.
   - For 480 V roadway lighting wiring diagram, see sheet E-47 and E-48.
   - For conduit and cable tray schedules, see sheets starting at E-224.

MARK	DATE	DESCRIPTIONS	REV	CK	CCO NO.
1	8/29/08	Added conduits 1311B, 1411B, conduit nos. 1311A, 1411A, PB-LTG and Sheet Notes 5. Rerouted conduits 1311 and 1411.	EJL	ECR	Light Pipe

REVISIONS

CONTRACT CHANGE ORDER NO. 70
SHEET 6 OF 36 04-0120L4 10/16/08

ROADWAY AND GIRDER LEVEL WESTBOUND
(LIGHTING AND ELECTRICAL SYSTEMS)

SCALE: 1:200

E-12

CALCULATED/ DESIGNED BY	FK	DATE 2/06	REVISED BY
CHECKED BY	AB	2/06	DATE REVISED

DESIGN OVERSIGHT
BEHZAD GOLEMOHAMMADI

STATE OF CALIFORNIA - DEPARTMENT OF TRANSPORTATION
Caltrans

LAST REVISION 00-00-00
DATE PLOTTED => 8/28/2008
TIME PLOTTED => 11:56:42 AM

THIS PLAN IS ACCURATE FOR ELECTRICAL WORK ONLY.

FOR REDUCED PLANS ORIGINAL 0 20 40 60 80

DGN FILE =>t:\13103\ms\pse\otd-contract 1\cco\electrical\cco-light pipe\40120lua012r1.dgn

DIST	COUNTY	ROUTE	KILOMETER POST TOTAL PROJECT	SHEET No	TOTAL SHEETS
04	Ala	80	1.6/2.7	399A R0	643

REGISTERED ELECTRICAL ENGINEER 08/29/08 DATE

PLANS APPROVAL DATE

REGISTERED PROFESSIONAL ENGINEER FADI WALIEDDINE No. 11465 Exp. 12/31/2009 ELECTRICAL STATE OF CALIFORNIA

PB AMERICAS, Inc.
303 Second St., Suite 700N
San Francisco, CA 94107-1317

The State of California or its officers or agents shall not be responsible for the accuracy or completeness of electronic copies of this plan sheet.

Caltrans now has a web site! To get to the web site, go to http://www.dot.ca.gov

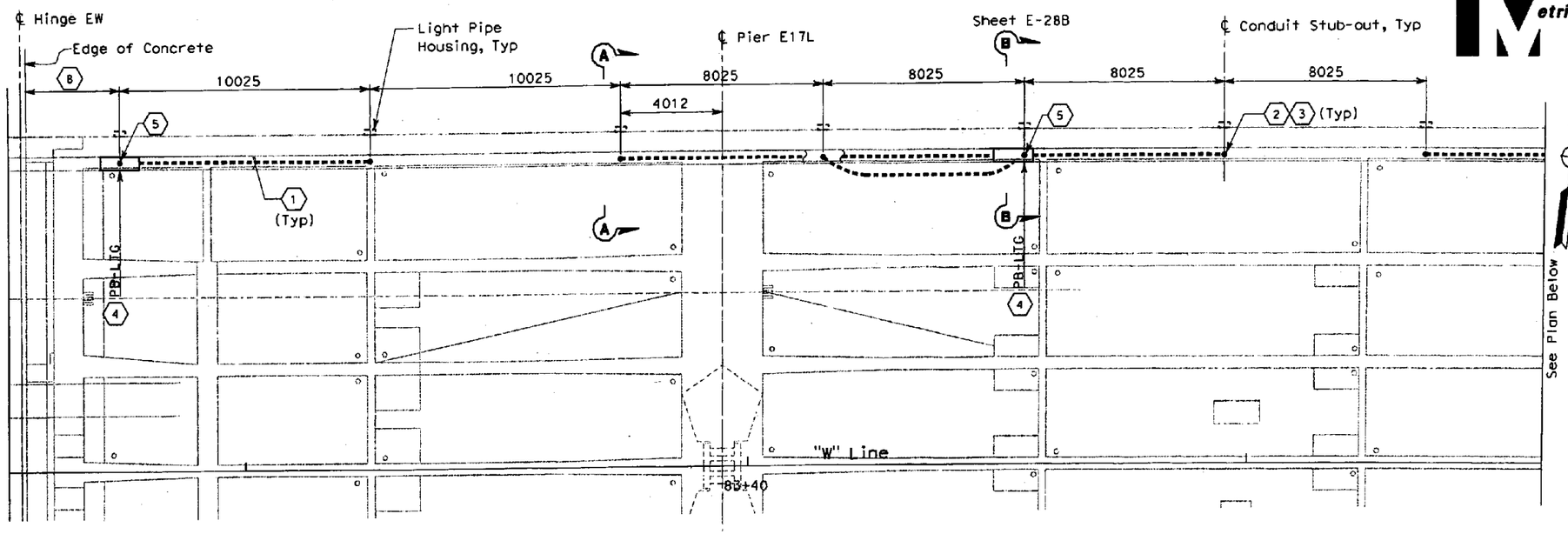

SHEET NOTES:

1. All conduit stub outs shall be 21 mm rigid steel conduit.
2. The end of the conduit stub out shall be capped for future use. See Section B-B, Sheet E-28B.
3. Extend conduit minimum 150 mm from exterior face of the bridge structure. Exposed conduit shall be rigid galvanized steel, PVC coated.
4. The location of PB-LTG is the same as on sheets E-10 to E-12. Contractor to adjust location to suit field condition.
5. Conduit to PB-LTG., continued at sheet E-10 and E-11.
6. Conduit down to girder. See E-14.
7. See Sheet E-48A.
8. Start of future light pipe (By others).

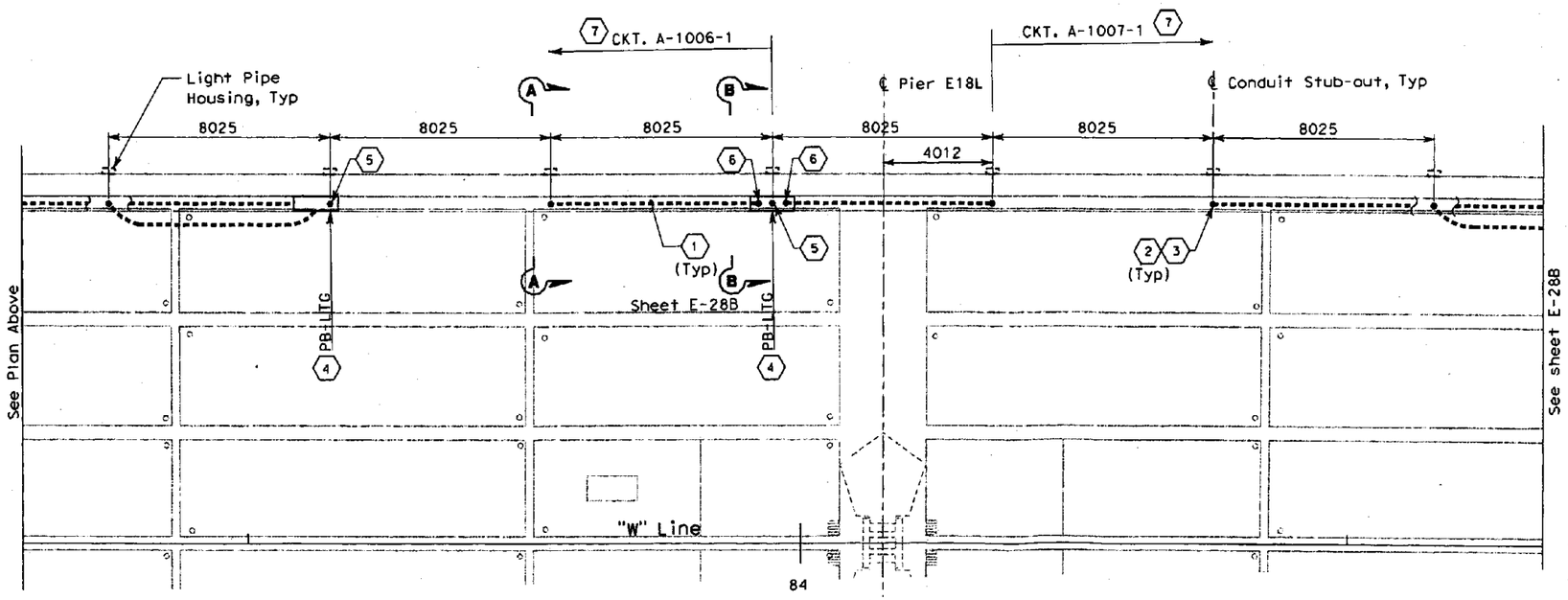

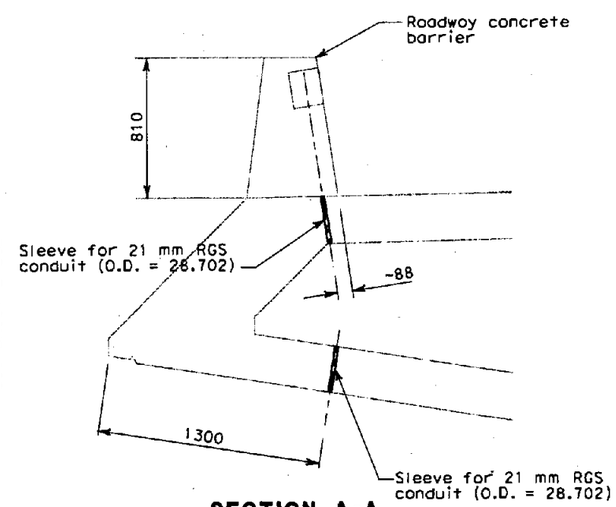

SECTION A-A
(Typical Location of sleeve for future light pipe)

PLAN
SCALE: 1:100

MARK	DATE	DESCRIPTIONS	BY	CH'D	CCO#
1	8/29/08	New drawing. Added 21 mm conduits and PB-LTG.	EJL	ECR	Light Pipe

REVISIONS

CONTRACT CHANGE ORDER NO. 70
SHEET 7 OF 36 04-012014 10/16/08

DETAILS
ROADWAY AND GIRDER LEVEL WESTBOUND LIGHT PIPE CONDUIT LOCATION
SCALE AS SHOWN

E-28A

STATE OF CALIFORNIA - DEPARTMENT OF TRANSPORTATION
Caltrans

DESIGN OVERSIGHT
BEHZAD GOLEMOHAMMADI

CALCULATED/DESIGNED BY EJL
CHECKED BY ECR

DATE 8/08 REVISED BY
DATE 8/08 REVISED

DGN REVISION 00-00-00
DATE PLOTTED => 10/14/2008
TIME PLOTTED => 10:29:13 AM

FOR REDUCED PLANS ORIGINAL 0 20 40 60 80

DGN FILE =>T:\13103\MS\pse\OTD-Contract 1\CCO\Electrical\CCO-Light Pipe\40120lua028AR0.dgn

DIST	COUNTY	ROUTE	KILOMETER POST TOTAL PROJECT	SHEET NO	TOTAL SHEETS
04	Ala	80	1.6/2.7	399B R0	643

REGISTERED ELECTRICAL ENGINEER 08/29/08 DATE

PLANS APPROVAL DATE

REGISTERED PROFESSIONAL ENGINEER FADI WALIEDDINE No. 11465 EXP. 12/31/2009 ELECTRICAL STATE OF CALIFORNIA

PB AMERICAS, Inc.
303 Second St., Suite 700N
San Francisco, CA 94107-1317

The State of California or its officers or agents shall not be responsible for the accuracy or completeness of electronic copies of this plan sheet.

Caltrans now has a web site! To get to the web site, go to http://www.dot.ca.gov

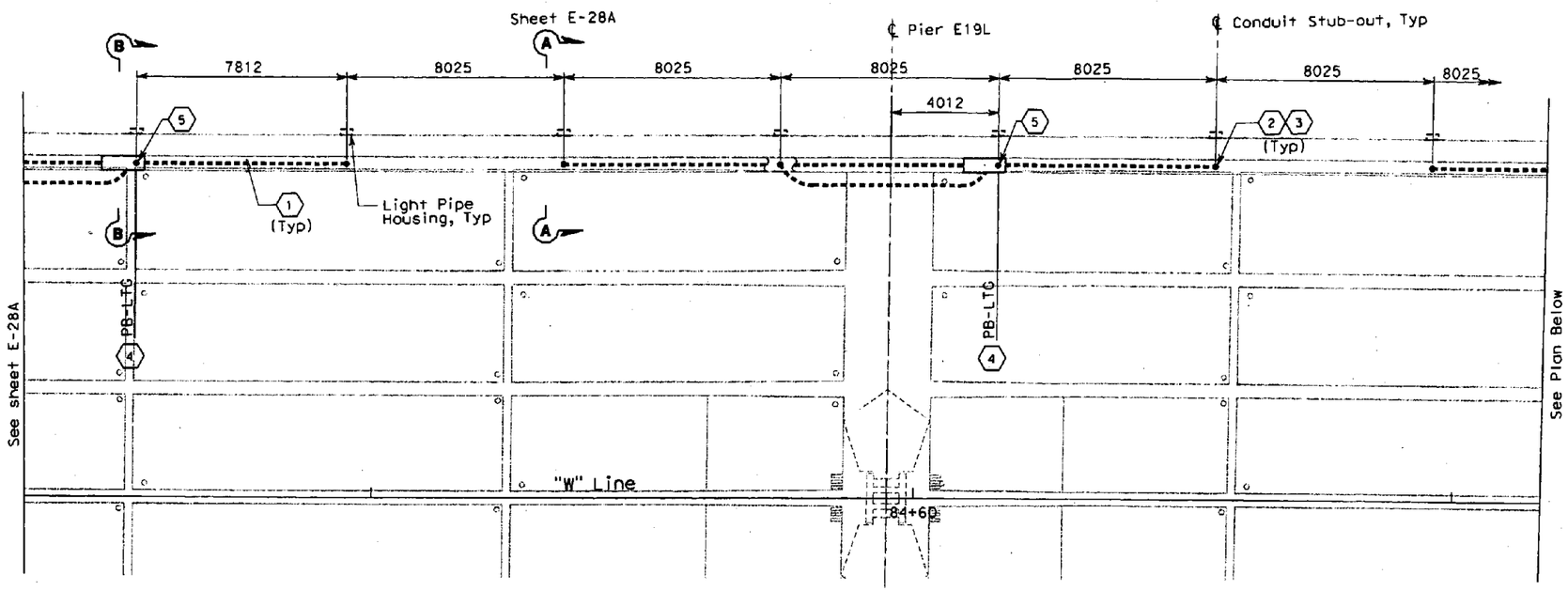

SHEET NOTES:

1. All conduit stub outs shall be 21 mm rigid steel conduit.
2. The end of the conduit stub out shall be capped for future use. See this drawing.
3. Extend conduit minimum 150 mm from exterior face of the bridge structure. Exposed conduit shall be rigid galvanized steel, PVC coated.
4. The location of PB-LTG is the same as on sheets E-10 to E-12. Contractor to adjust location to suit field condition.
5. Conduit to PB-LTG., continued at sheets E-11and E-12.
6. See Sheets E-48A and E-48B.

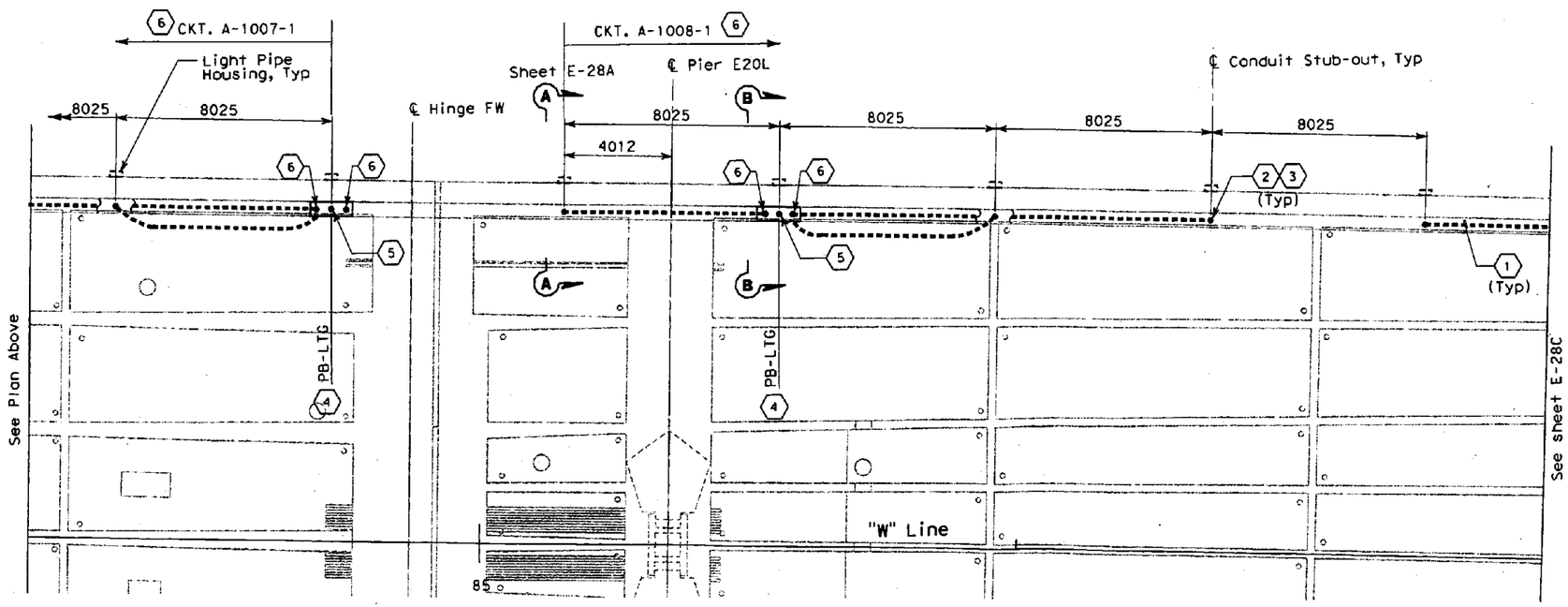

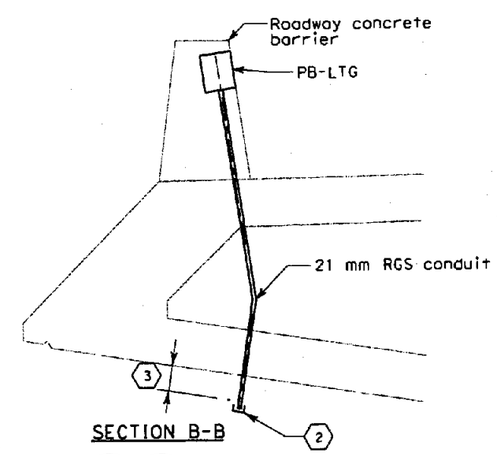

DETAILS
ROADWAY AND GIRDER LEVEL WESTBOUND LIGHT PIPE CONDUIT LOCATION
SCALE AS SHOWN

E-28B

MARK	DATE	DESCRIPTIONS	BY	CH'D	CCO#
1	8/29/08	New drawing. Added 21 mm conduits and PB-LTG.	EJL	ECR	Light Pipe

REVISIONS

CONTRACT CHANGE ORDER NO. 70
SHEET 8 OF 36 04-0120L4 10/16/08

CALCULATED/DESIGNED BY	EJL	DATE 8/08	REVISED BY
CHECKED BY	ECR	8/08	DATE REVISED

DESIGN OVERSIGHT
BEHZAD GOLEMOHAMMADI

STATE OF CALIFORNIA - DEPARTMENT OF TRANSPORTATION
Caltrans

DATE PLOTTED => 10/8/2008
TIME PLOTTED => 4:11:42 PM

REVISION 00-00-00

FOR REDUCED PLANS ORIGINAL 0 20 40 60 80

DGN FILE =>T:\13103\MS\pse\OTD-Contract 1\CCO\Electrical\CCO-Light Pipe\401201ua028BR0.dgn

DIST	COUNTY	ROUTE	KILOMETER POST TOTAL PROJECT	SHEET No	TOTAL SHEETS
04	Ala	80	1.6/2.7	399C R0	643

REGISTERED ELECTRICAL ENGINEER 08/29/08 DATE

PLANS APPROVAL DATE

REGISTERED PROFESSIONAL ENGINEER FADI WALIEDDINE NO. 11465 Exp. 12/31/2009 ELECTRICAL STATE OF CALIFORNIA

PB AMERICAS, Inc.
303 Second St., Suite 700N
San Francisco, CA 94107-1317

The State of California or its officers or agents shall not be responsible for the accuracy or completeness of electronic copies of this plan sheet.

Caltrans now has a web site! To get to the web site, go to http://www.dot.ca.gov

Caltrans Metric

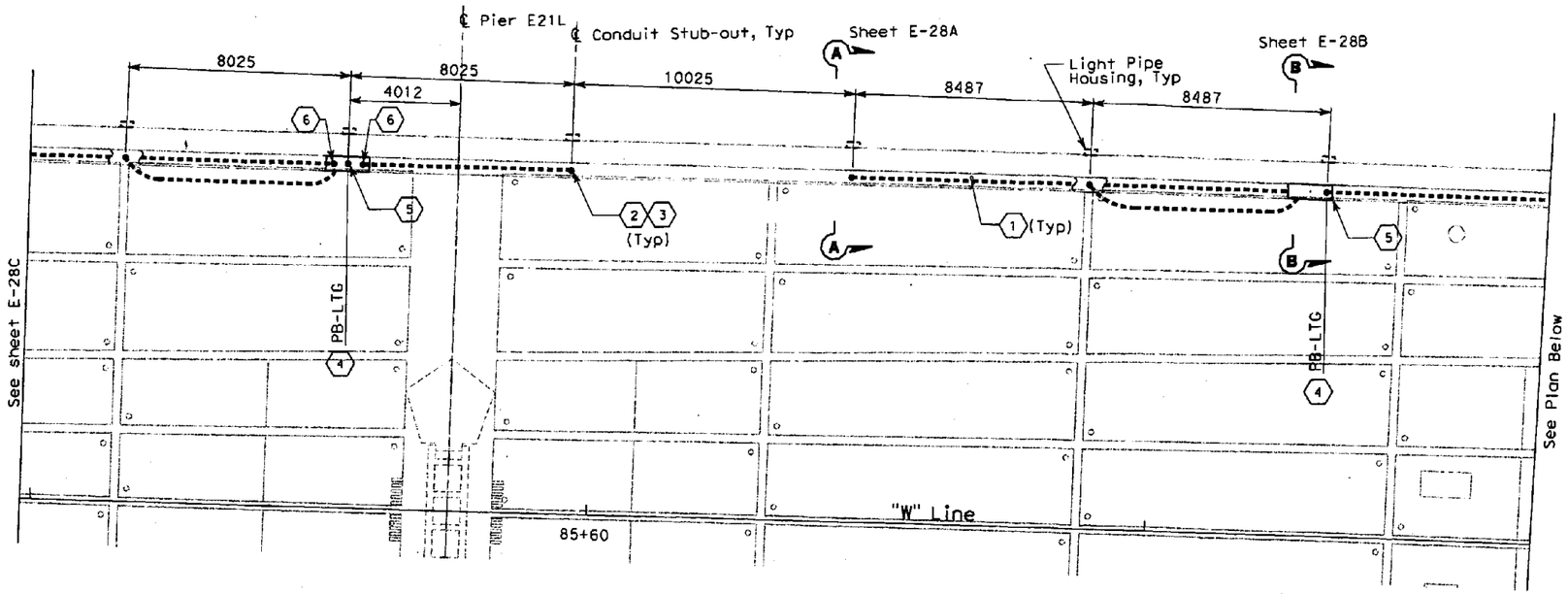

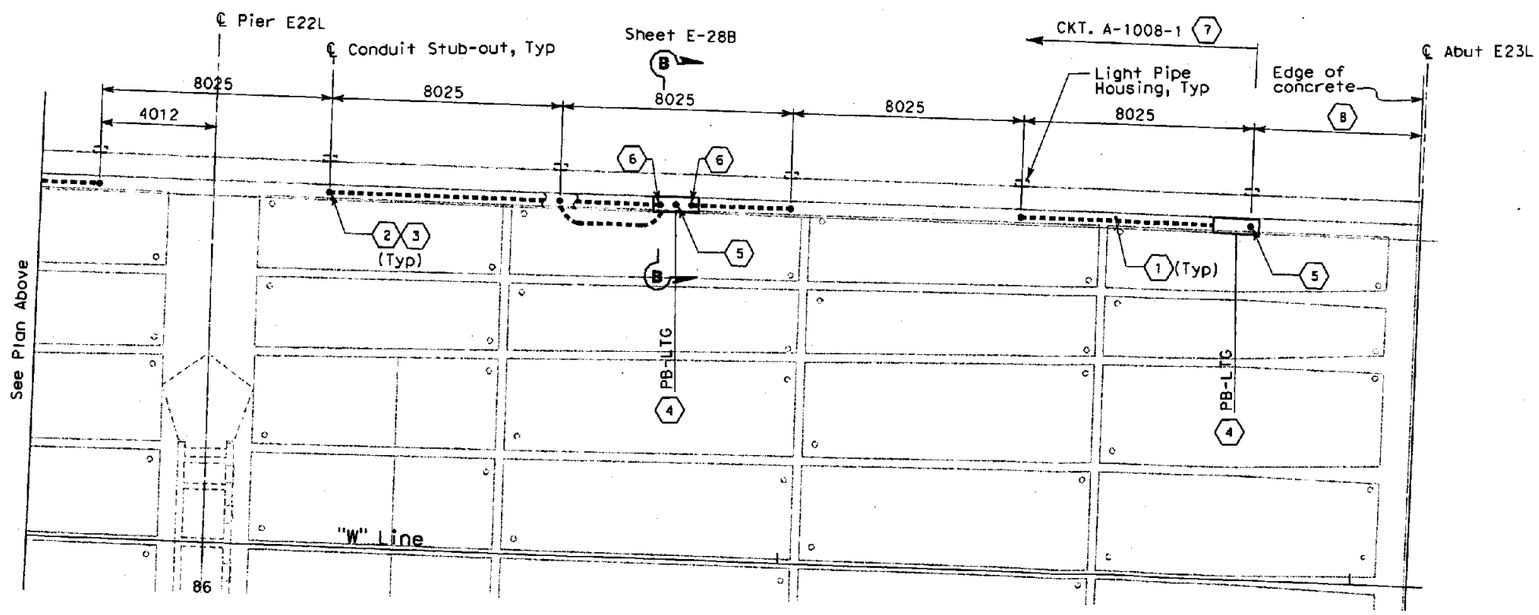

SHEET NOTES:

1. All conduit stub outs shall be 21 mm rigid steel conduit.
2. The end of the conduit stub out shall be capped for future use. See Section B-B, Sheet E-28B.
3. Extend conduit minimum 150 mm from exterior face of the bridge structure. Exposed conduit shall be rigid galvanized steel, PVC coated.
4. The location of PB-LTG is the same as on sheets E-10 to E-12. Contractor to adjust location to suit field condition.
5. Conduit to PB-LTG., continued at sheet E-21.
6. Conduit down to girder. See E-15.
7. See Sheet E-48B.
8. Start of future light pipe (By others).

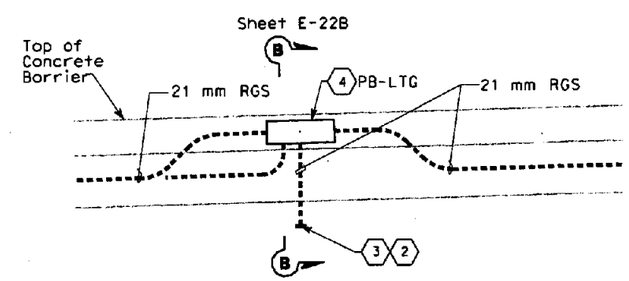

TYPICAL SECTION

MARK	DATE	DESCRIPTIONS	BY	CH'D	CCO#
1	8/29/08	New drawing. Added 21 mm conduits and PB-LTG.	EJL	ECR	Light Pipe

REVISIONS

CONTRACT CHANGE ORDER NO. 70
SHEET 9 OF 36 04-0120L4 10/16/08

DETAILS
ROADWAY AND GIRDER LEVEL WESTBOUND LIGHT PIPE CONDUIT LOCATION
SCALE AS SHOWN

E-28C

CALCULATED/DESIGNED BY	EJL	DATE 8/08	REVISED BY
CHECKED BY	ECR	8/08	DATE REVISED

DESIGN OVERSIGHT
BEHZAD GOLEMOHAMMADI

STATE OF CALIFORNIA - DEPARTMENT OF TRANSPORTATION
Caltrans

DATE PLOTTED => 10/14/2008
TIME PLOTTED => 10:28:56 AM

FOR REDUCED PLANS ORIGINAL 0 20 40 60 80

DGN FILE =>T:\13103\WS\pse\DTD-Contract 1\CCO\Electrical\CCO-Light Pipe\401201ua028CR0.dgn

Dist	COUNTY	ROUTE	KILOMETER POST TOTAL PROJECT	SHEET No.	TOTAL SHEETS
04	Ala	80	1.6/2.7	419A R0	643

REGISTERED ELECTRICAL ENGINEER 8/29/08

PLANS APPROVAL DATE

FADI WALIEDDINE No. 11465 Exp. 12/31/09 ELECTRICAL — REGISTERED PROFESSIONAL ENGINEER — STATE OF CALIFORNIA

THE STATE OF CALIFORNIA OR ITS OFFICERS OR AGENTS SHALL NOT BE RESPONSIBLE FOR THE ACCURACY OR COMPLETENESS OF ELECTRONIC COPIES OF THIS PLAN SHEET.

PB AMERICAS, Inc.
A Parsons Brinckerhoff Company
303 Second St., Suite 700N
San Francisco, CA 94107-1317

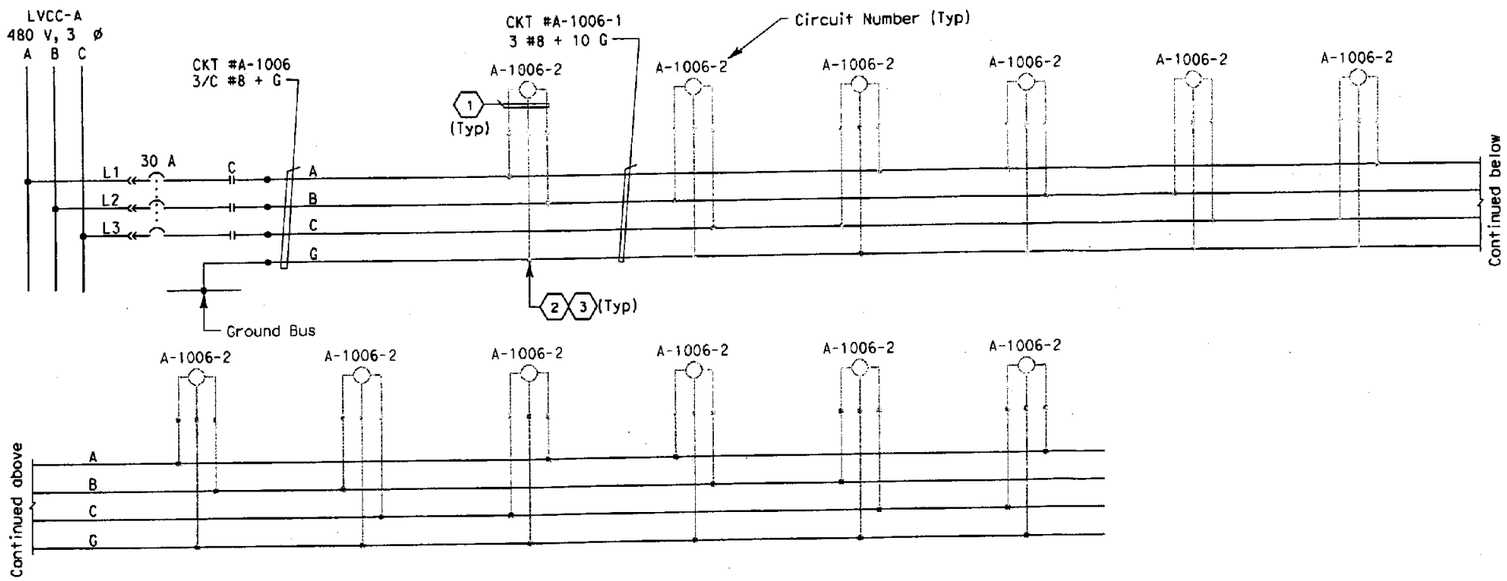

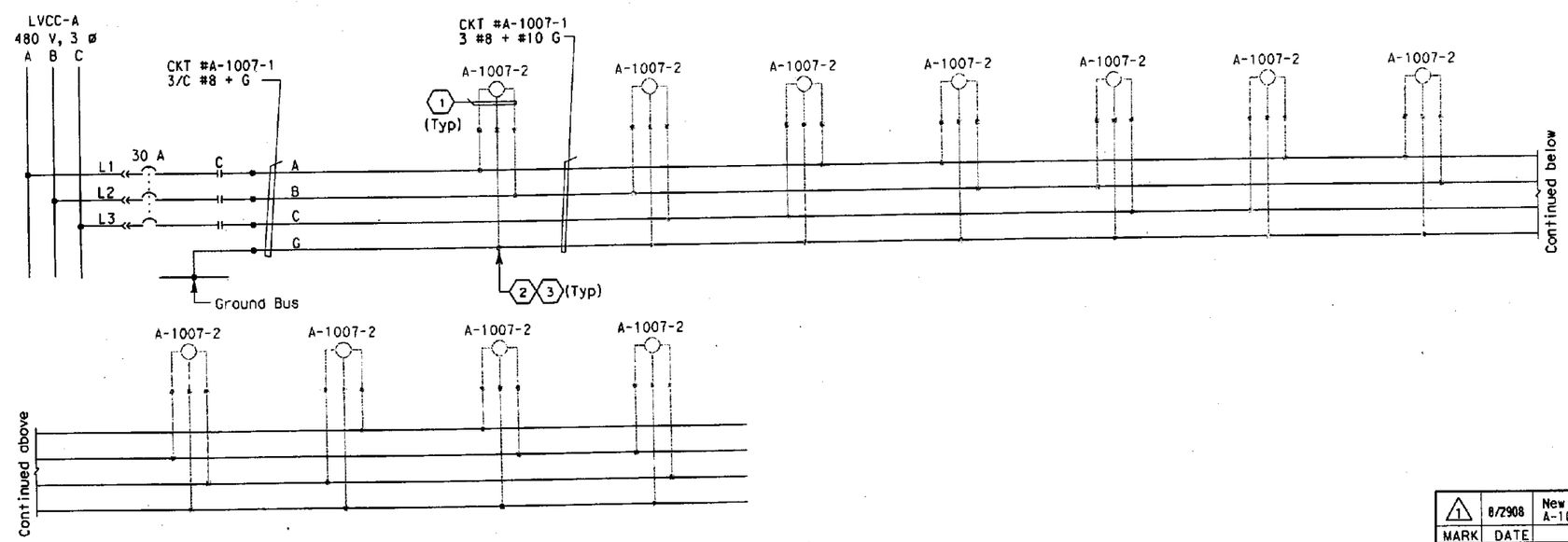

SHEET NOTES:

1. 3 #10 AWG single conductors. (By Others)
2. Conductors spliced in pull box PB-LTG.
3. Future light pipe connections. Coil and tape end of conductors in pull box PB-LTG.

NOTES:

1. References:
   - For LVCC-A single line diagrams, see sheet E-130
   - For future light pipe plans, see sheets E-28A, E-28B and E-28C.

MARK	DATE	DESCRIPTIONS	REV	CK	CCO NO.
1	8/2908	New Drawing. Add Ckt-A-1006, A-1006-1, A-1007 and A-1007-1	MP	EJL	Light Pipe

REVISIONS

CONTRACT CHANGE ORDER NO. 70
SHEET 10 OF 36 04-012014 10/16/08

DETAILS
ROADWAY AND GIRDER LEVEL WESTBOUND 480 V LIGHT PIPE WIRING DIAGRAM
NO SCALE

E-48A

THIS PLAN IS ACCURATE FOR ELECTRICAL WORK ONLY.

FOR REDUCED PLANS ORIGINAL 0 20 40 60 80

DGN FILE =>T:\13103\MS\pse\OTO-Contract 1\CCO\Electrical\CCO-Light Pipe\20080828 Submittal\401201uo048AR0.dgn

DATE PLOTTED => 10/2/2008
TIME PLOTTED => 9:54:20 AM

LAST REVISION 00-00-00

STATE OF CALIFORNIA - DEPARTMENT OF TRANSPORTATION
Caltrans

DESIGN OVERSIGHT
BEHZAD GOLEMOHAMMADI

CALCULATED/DESIGNED BY MP
CHECKED BY EJL

DATE REVISED BY 8/08
DATE REVISED 8/08

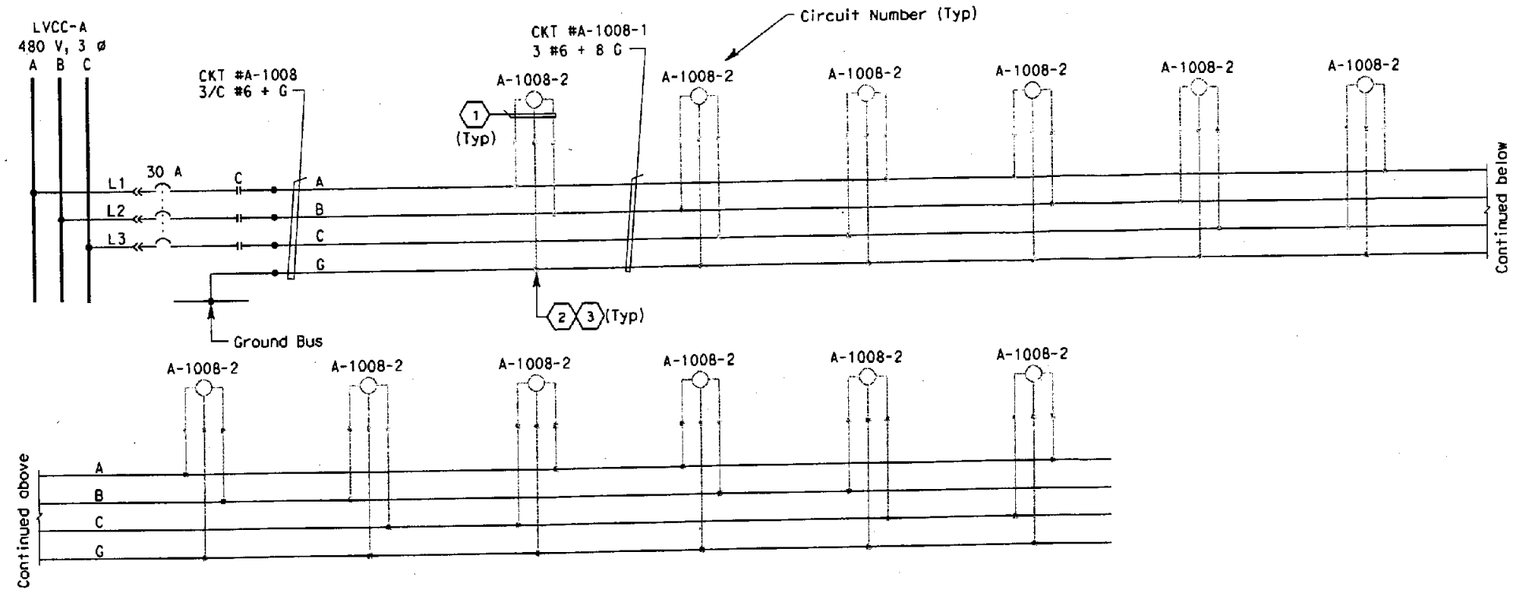

Dist	COUNTY	ROUTE	KILOMETER POST TOTAL PROJECT	SHEET No.	TOTAL SHEETS
04	Ala	80	1.6/2.7	419B R0	643

8/29/08
REGISTERED ELECTRICAL ENGINEER

PLANS APPROVAL DATE

REGISTERED PROFESSIONAL ENGINEER — FADI WALIEDDINE — No. 11465 — Exp. 12/31/09 — ELECTRICAL — STATE OF CALIFORNIA

THE STATE OF CALIFORNIA OR ITS OFFICERS OR AGENTS SHALL NOT BE RESPONSIBLE FOR THE ACCURACY OR COMPLETENESS OF ELECTRONIC COPIES OF THIS PLAN SHEET.

PB AMERICAS, Inc.
A Parsons Brinckerhoff Company
303 Second St., Suite 700N
San Francisco, CA 94107-1317

SHEET NOTES:

(1) 3 #10 AWG single conductors. (By Others)

(2) Conductors spliced in pull box PB-LTG.

(3) Future light pipe connections. Coil and tape end of conductors in pull box PB-LTG.

NOTES:

1. References:
   - For LVCC-A single line diagrams, see sheet E-13D.
   - For future light pipe plans, see sheets E-28A, E-28B and E-28C.

MARK	DATE	DESCRIPTIONS	REV	CK	CCO NO.
1	8/2908	New Drawing. Add Ckt-A-1008, A-1008-1	MP	EJL	Light Pipe

REVISIONS

CONTRACT CHANGE ORDER NO. 70
SHEET 11 OF 36 04-0120L4 10/16/08

DETAILS
ROADWAY AND GIRDER LEVEL WESTBOUND 480 V LIGHT PIPE WIRING DIAGRAM
NO SCALE

E-48B

DESIGN OVERSIGHT	CALCULATED/ DESIGNED BY	MP	DATE 8/08	REVISED BY
BEHZAD GOLEMOHAMMADI	CHECKED BY	EJL	8/08	DATE REVISED

STATE OF CALIFORNIA - DEPARTMENT OF TRANSPORTATION
Caltrans

THIS PLAN IS ACCURATE FOR ELECTRICAL WORK ONLY.

FOR REDUCED PLANS ORIGINAL 0 20 40 60 80

DGN FILE =>T:\13103\MS\pse\OTD-Contract 1\CCO\Electrical\CCO-Light Pipe\20080828 Submittal\4012Iuo048BR0.dgn

LAST REVISION 00-00-00 DATE PLOTTED => 10/2/2008 TIME PLOTTED => 9:54:35 AM

DIST	COUNTY	ROUTE	KILOMETER POST TOTAL PROJECT	SHEET No	TOTAL SHEETS
04	Alo	80	1.6/2.7	420R1	643

REGISTERED ELECTRICAL ENGINEER 05/15/06 DATE

1-29-07
PLANS APPROVAL DATE

REGISTERED PROFESSIONAL ENGINEER JENS ERLINGSSON No. 8249 Exp. 9/30/08 ELECTRICAL STATE OF CALIFORNIA

PB POWER, Inc.
A Parsons Brinckerhoff Company
303 Second St., Suite 700N
San Francisco, CA 94107-1317

The State of California or its officers or agents shall not be responsible for the accuracy or completeness of electronic copies of this plan sheet.

To get to the Caltrans web site, go to: http://www.dot.ca.gov

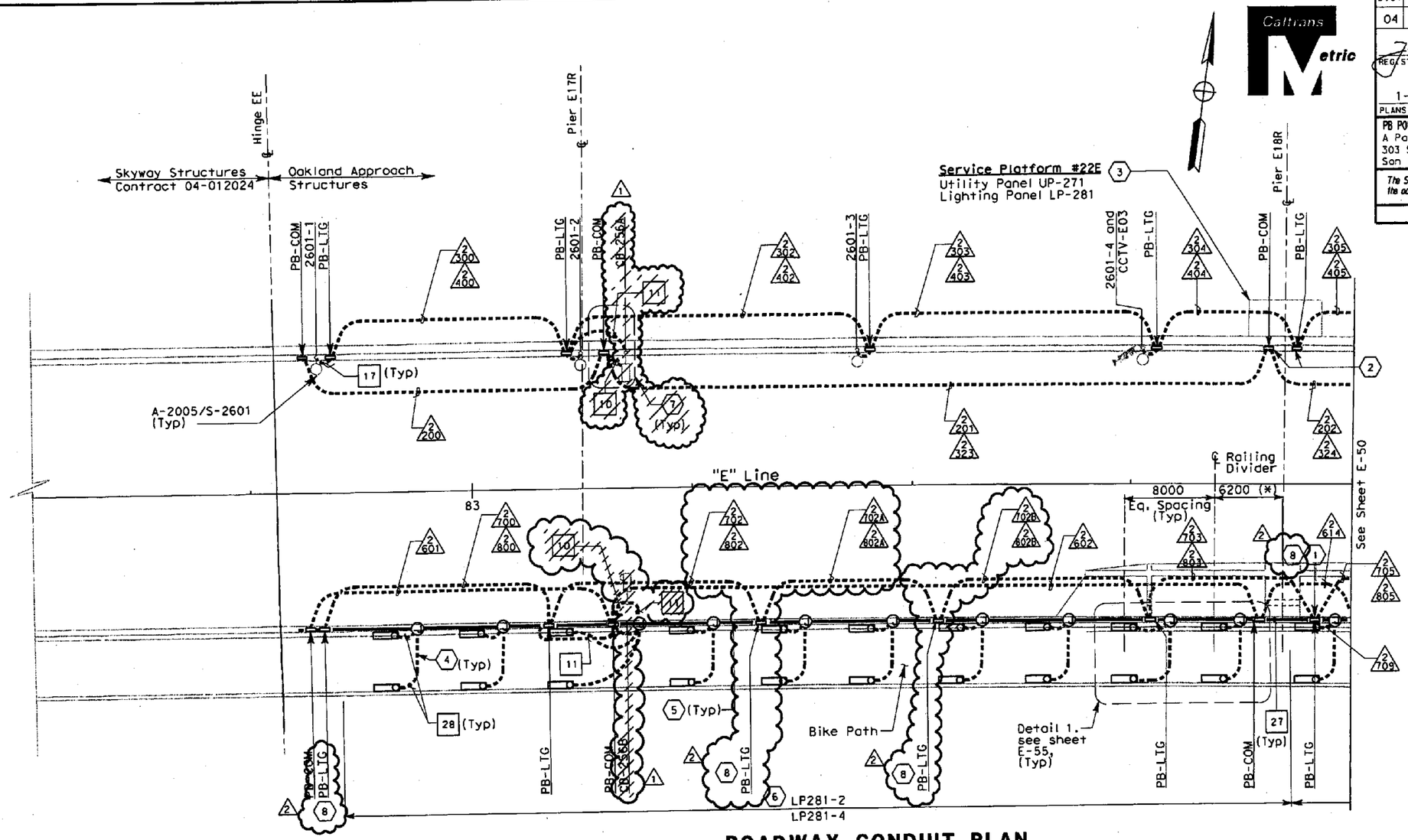

ROADWAY CONDUIT PLAN

SHEET NOTES:

1. Conduit down into Girder Level. See sheet E-51.
2. Conduit down into Girder Level. See sheet E-61.
3. For Service Platform details, see sheet E-53.
4. For locations of conduit inside the Bike Path, see sheets E-55 and E-58.
5. All conduits and fittings routed exposed between the Bike Path and the Roadway shall be PVC coated RGS.
6. Panel and circuit number on top apply to lights located in the railing on the north side of the Bike Path. Panel and circuit number below apply to lights located in the railing on the south side of the Bike Path.
7. ~~For Call Box conduit installation, see sheet E-73.~~
8. Down, conduit stub-out for future light pipe, see sheet E-62A.

NOTES:

1. References:
   - For typical details and locations of conduit connections to light poles, barrier outlet boxes, ~~call boxes,~~ CMS, CCTV and MVDS, see ~~sheets E-71~~ thru E-73.
   - TOS equipment is shown for conduit routing only. For typical details of TOS controller and devices, see sheets starting at E-204.
   - For types of pull boxes, splice boxes and enclosures, see sheet E-77.
   - ~~For call box schedule, see sheet E-111.~~
   - For conduit and cable tray schedules, see sheets starting at E-224.
   - For LP281 panel schedule, refer to E-79.
   - For Roadway Level and Bike Path Fixture Schedule, see sheet E-76.
   - For Roadway Level, Bike Path Fixtures and Call Box Wiring Diagram, (By others).
2. (*) Dimension to be provided by structral.
3. Install conduits only.

REGISTERED PROFESSIONAL ENGINEER FADI WALIEDDINE No. 11465 Exp. 12/31/2009 ELECTRICAL STATE OF CALIFORNIA

MARK	DATE	DESCRIPTIONS	REV	CK	CCO NO.
2	8/29/08	Added conduit nos. 2702A, 2802A, PB-LTG and Sheet Notes 8. Re-routed conduit no. 2702 and 2802.	EJL	ECR	Light Pipe
1	8/29/08	Deleted CB-256A, CB-256B, Project Notes 10 and 11, Sheet Note 7 and Call Box Reference Note.	ECR	EJL	18S1

REVISIONS

CONTRACT CHANGE ORDER NO. 70
SHEET 12 OF 36 04-0120L4 10/16/08

ROADWAY AND GIRDER LEVEL EASTBOUND
(LIGHTING AND ELECTRICAL SYSTEMS)

SCALE: 1:200

E-49

DESIGN OVERSIGHT					
BEHZAD GOLEMOHAMMADI					
CALCULATED/DESIGNED BY	FK	DATE 2/06	REVISED BY		
CHECKED BY	AB	2/06	DATE REVISED		

STATE OF CALIFORNIA - DEPARTMENT OF TRANSPORTATION
Caltrans

THIS PLAN IS ACCURATE FOR ELECTRICAL WORK ONLY.

FOR REDUCED PLANS ORIGINAL 0 20 40 60 80

DGN FILE =>t:\13103\ms\pse\otd-contract 1\cco\electrical\cco-light pipe\40120lua049r1.dgn

LAST REVISION 00-00-00 DATE PLOTTED => 8/28/2008 TIME PLOTTED => 11:56:49 AM

DIST	COUNTY	ROUTE	KILOMETER POST TOTAL PROJECT	SHEET NO	TOTAL SHEETS
04	Ala	80	1.6/2.7	421 R1	643

REGISTERED ELECTRICAL ENGINEER 05/15/06 DATE

1-29-07
PLANS APPROVAL DATE

REGISTERED PROFESSIONAL ENGINEER JENS ERLINGSSON No. 8249 Exp. 9/30/08 ELECTRICAL STATE OF CALIFORNIA

PB POWER, Inc.
A Parsons Brinckerhoff Company
303 Second St., Suite 700N
San Francisco, CA 94107-1317

The State of California or its officers or agents shall not be responsible for the accuracy or completeness of electronic copies of this plan sheet.

To get to the Caltrans web site, go to: http://www.dot.ca.gov

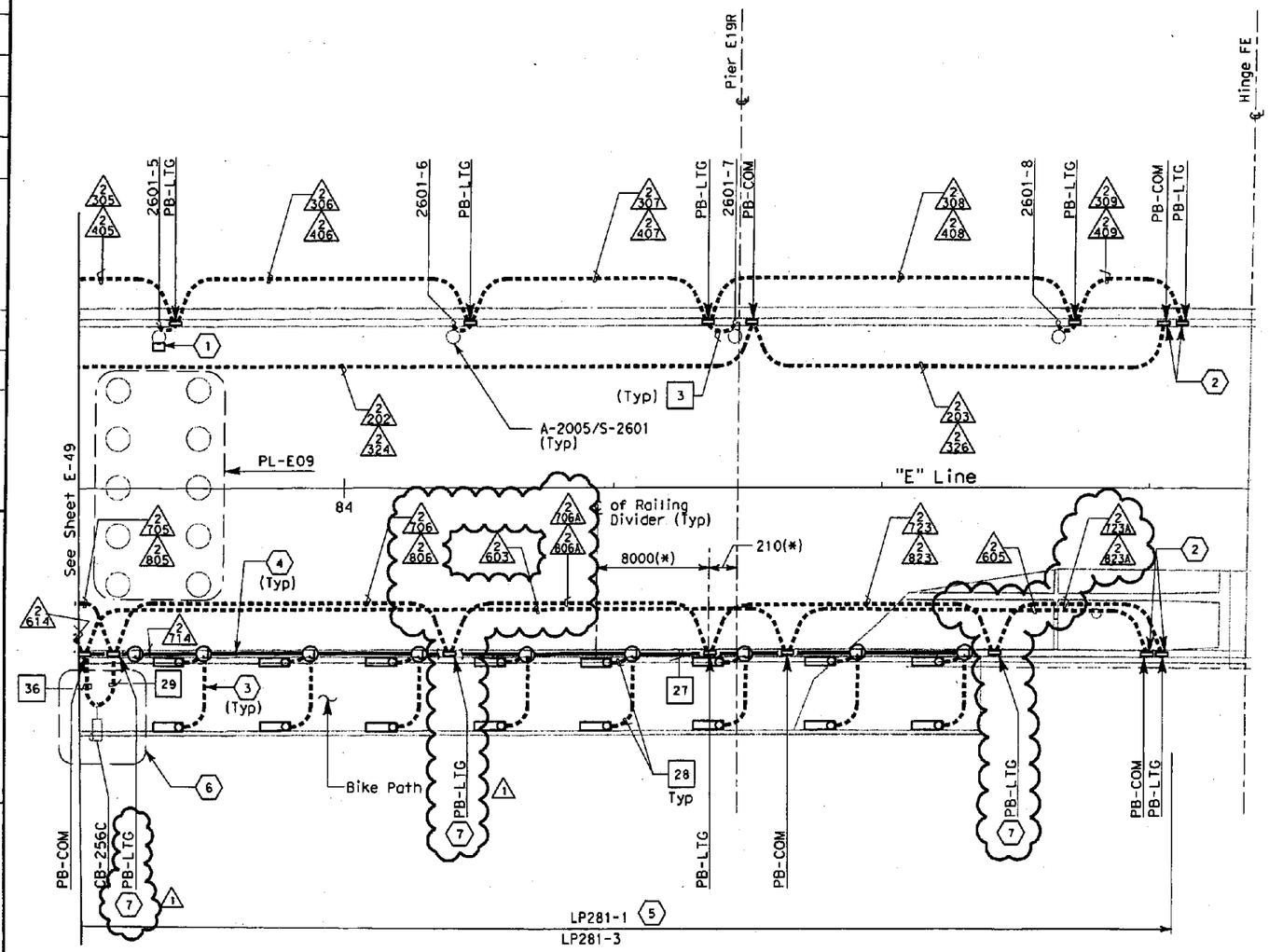

ROADWAY CONDUIT PLAN

SHEET NOTES:

1. Preformed Loop splice box PB-4D, see sheet E-61 and E-77.
2. Conduit down into Girder Level. See sheet E-52.
3. For locations of conduit inside the Bike Path, see sheets E-55 and E-58.
4. All conduits and fittings routed exposed between the Bike Path and the Roadway shall be PVC coated RGS.
5. Panel and circuit number on top apply to lights located in the railing on the north side of the Bike Path. Panel and circuit number below apply to lights located in the railing on the south side of the Bike Path.
6. ~~For Call Box conduit installation, see sheets E-58 and E-73.~~
7. Down, conduit stub out for future light pipe, see sheet E-62B.

NOTES:

1. References:
   - For typical details and locations of conduit connections to light poles, barrier outlet boxes, call boxes, CCTV and MVDS, see sheets E-71 thru E-73.
   - TOS equipment is shown for conduit routing only. For typical details of TOS controller and devices, see sheets starting at E-204.
   - For types of pull boxes, splice boxes and enclosures, see sheet E-77.
   - For conduit and cable tray schedules, see sheets starting at E-224.
   - For LP281 panel schedule, refer to E-79.
   - For Roadway Level Call Box and Bike Path Fixture Wiring Diagram, (By others).
   - For Roadway Level and Bike Path Call Box Schedules, see sheet E-76.
2. (*) Dimensions to be provided by structural.
3. Install conduits only.

MARK	DATE	DESCRIPTIONS	BY	CH'D	CCO#
1	8/29/08	Added Conduit Numbers 2706A, 2723A, 2806A, 2823A, PB-LTG and Sheet Notes 7. Re-routed 2706 and 2806.	EJL	ECR	Light Pipe

REVISIONS

REGISTERED PROFESSIONAL ENGINEER ADI WALIEDDINE No. 11465 Exp. 12/31/2009 ELECTRICAL STATE OF CALIFORNIA

CONTRACT CHANGE ORDER NO. 70
SHEET 13 OF 36 04-012014 10/16/08

ROADWAY AND GIRDER LEVEL EASTBOUND
(LIGHTING AND ELECTRICAL SYSTEMS)
SCALE: 1:200

THIS PLAN IS ACCURATE FOR ELECTRICAL WORK ONLY.

E-50

STATE OF CALIFORNIA - DEPARTMENT OF TRANSPORTATION
Caltrans
DESIGN OVERSIGHT
BEHZAD GOLEMOHAMMADI
CALCULATED/DESIGNED BY FK
CHECKED BY AB
DATE 2/06 REVISED BY
2/06 DATE REVISED

LAST REVISION 00-00-00
DATE PLOTTED => 8/28/2008
TIME PLOTTED => 11:56:51 AM

FOR REDUCED PLANS ORIGINAL 0 20 40 60 80

DGN FILE =>t:\13103\ms\pse\otd-contract 1\cco\electrical\cco-light pipe\401201ua050r1.dgn

DIST	COUNTY	ROUTE	KILOMETER POST TOTAL PROJECT	SHEET No	TOTAL SHEETS
04	Ala	80	1.6/2.7	433A R0	643

REGISTERED ELECTRICAL ENGINEER 08/29/08 DATE

PLANS APPROVAL DATE

REGISTERED PROFESSIONAL ENGINEER FADI WALIEDDINE No. 11465 Exp. 12/31/2009 ELECTRICAL STATE OF CALIFORNIA

PB AMERICAS, Inc.
303 Second St., Suite 700N
San Francisco, CA 94107-1317

The State of California or its officers or agents shall not be responsible for the accuracy or completeness of electronic copies of this plan sheet.

Caltrans now has a web site! To get to the web site, go to http://www.dot.ca.gov

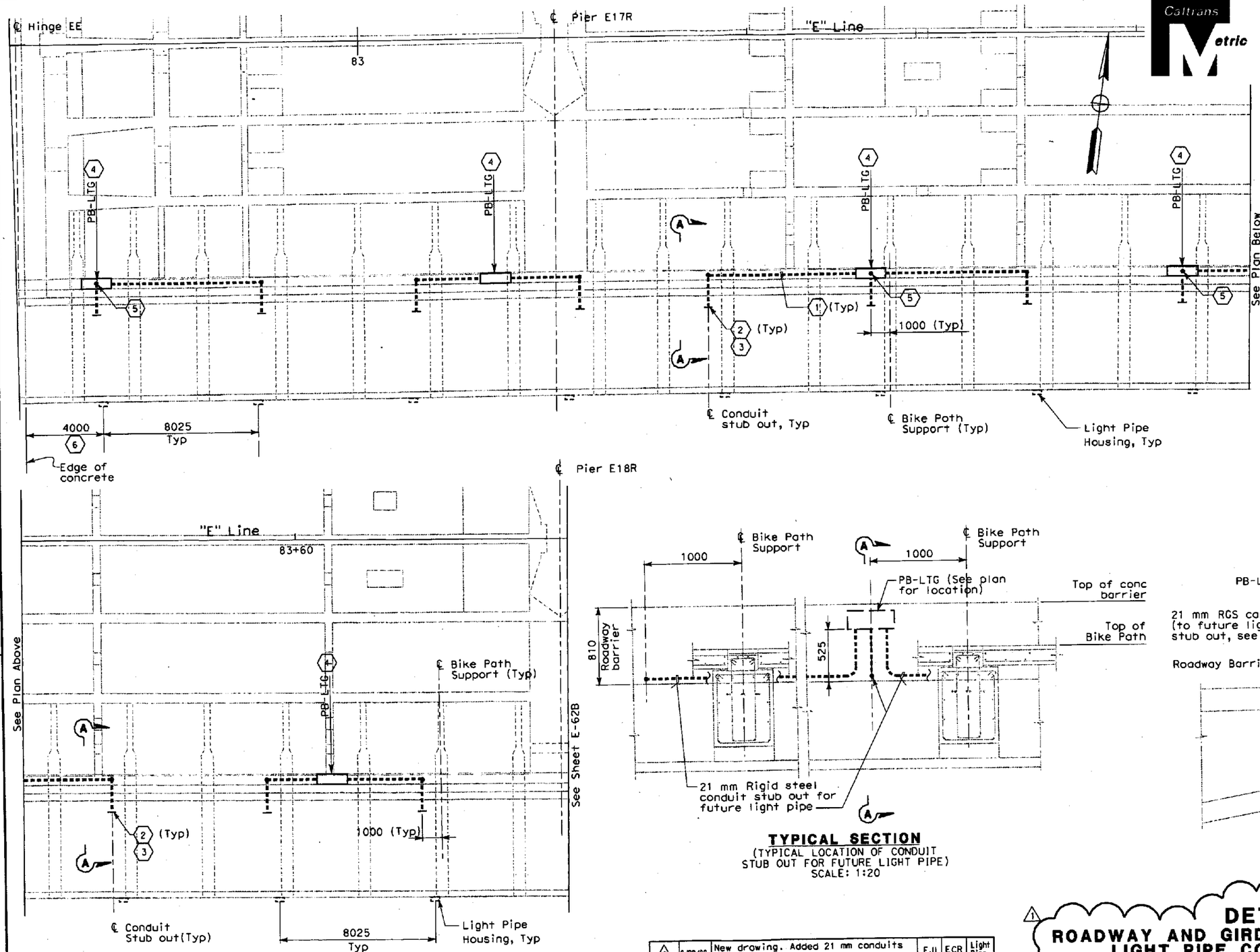

PLAN
SCALE: 1:100

TYPICAL SECTION
(TYPICAL LOCATION OF CONDUIT STUB OUT FOR FUTURE LIGHT PIPE)
SCALE: 1:20

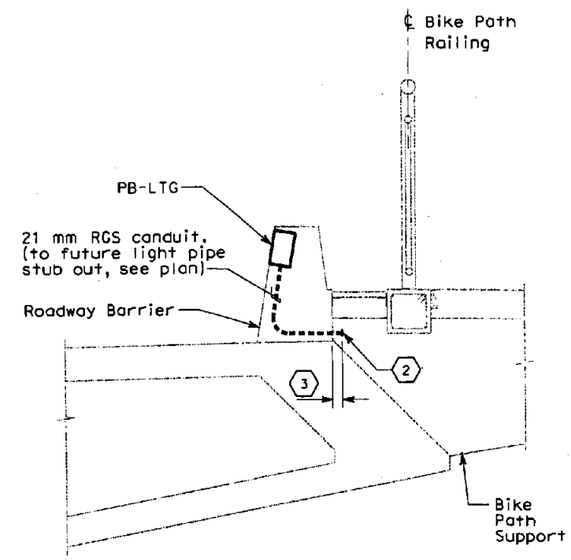

SECTION A-A
SCALE: 1:20

SHEET NOTES:

1. All conduit stub outs shall be 21 mm rigid steel conduit.
2. The end of the conduit stub out shall be capped for future use.
3. Extend conduit minimum 150 mm from exterior face of the roadway barrier. Exposed conduit shll rigid galvanized steel, PVC coated.
4. The location of PB-LTG is the same as on sheets E-49 and E-50. Contractor to adjust location to suit field condition.
5. Conduit to PB-LTG. Continued on sheet E-49
6. Start of future light pipe (By others).

MARK	DATE	DESCRIPTIONS	BY	CH'D	CCO#
1	8/29/08	New drawing. Added 21 mm conduits and PB-LTG.	EJL	ECR	Light Pipe

REVISIONS

CONTRACT CHANGE ORDER NO. 70
SHEET 14 OF 36 04-0120L4 10/16/08

DETAILS
ROADWAY AND GIRDER LEVEL EASTBOUND LIGHT PIPE CONDUIT LOCATION
SCALE AS SHOWN

E-62A

CALCULATED/ DESIGNED BY	EJL	8/08	REVISED BY
CHECKED BY	ECR	8/08	DATE REVISED

DESIGN OVERSIGHT
BEHZAD GOLEMOHAMMADI

STATE OF CALIFORNIA - DEPARTMENT OF TRANSPORTATION
Caltrans

FOR REDUCED PLANS ORIGINAL 0 20 40 60 80

DGN FILE =>T:\13103\WS\pse\OTD-Contract 1\CCO\Electrical\CCO-Light Pipe\40120luo062AR0.dgn

DATE PLOTTED => 10/14/2008
TIME PLOTTED => 10:28:28 AM
USER NAME => 00-00-00

DIST	COUNTY	ROUTE	KILOMETER POST TOTAL PROJECT	SHEET No	TOTAL SHEETS
04	Ala	80	1.6/2.7	433B R0	643

08/29/08
REGISTERED ELECTRICAL ENGINEER DATE

PLANS APPROVAL DATE

REGISTERED PROFESSIONAL ENGINEER FADI WALEEDDINE No. 11465 Exp. 12/31/2009 ELECTRICAL STATE OF CALIFORNIA

PB AMERICAS, Inc.
303 Second St., Suite 700N
San Francisco, CA 94107-1317

The State of California or its officers or agents shall not be responsible for the accuracy or completeness of electronic copies of this plan sheet.

Caltrans now has a web site! To get to the web site, go to http://www.dot.ca.gov

Caltrans Metric

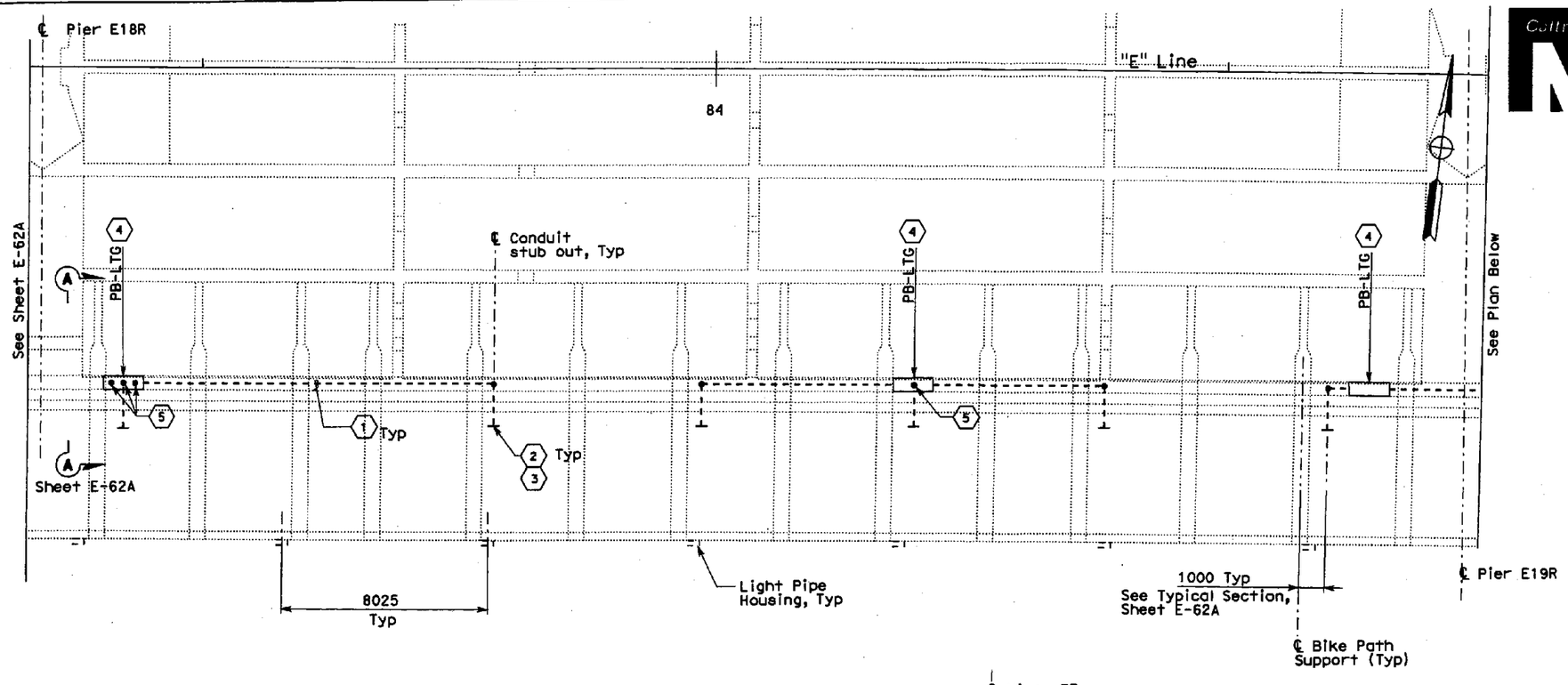

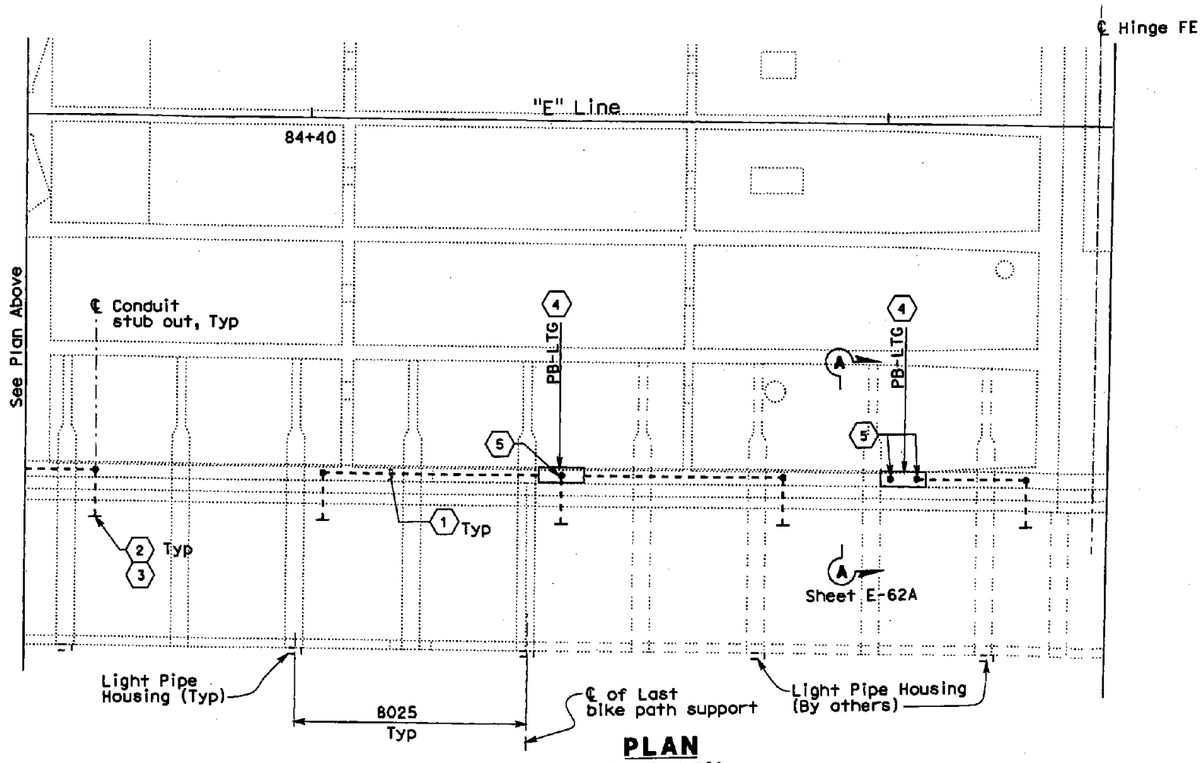

PLAN
SCALE: 1:200

SHEET NOTES:

1. All conduit stub outs shall be 21 mm rigid steel conduit.
2. The end of the conduit stub out, shall be capped for future use. See Section A-A sheet E-62A..
3. Extend conduit minimum 150 mm from exterior face of the roadway barrier. Exposed conduit shll rigid galvanized steel, PVC coated.
4. The location of PB-LTG is the same as sheets E-49 and E-50. Contractor to adjust location to suit field condition.
5. Conduit to PB-LTG., continued at sheet E-49.

MARK	DATE	DESCRIPTIONS	BY	CH'D	CCO#
1	8/29/08	New drawing. Added 21 mm conduits and PB-LTG.	EJL	ECR	Light Pipe

REVISIONS

CONTRACT CHANGE ORDER NO. 70
SHEET 15 OF 36 04-0120L4 10/16/08

DETAILS
ROADWAY AND GIRDER LEVEL EASTBOUND LIGHT PIPE CONDUIT LOCATION
SCALE AS SHOWN

E-62B

DATE	REVISED BY	DATE	REVISED BY
8/08	EJL	8/08	ECR

CALCULATED/DESIGNED BY
CHECKED BY

DESIGN OVERSIGHT
BEHZAD GOLEMOHAMMADI

STATE OF CALIFORNIA - DEPARTMENT OF TRANSPORTATION
Caltrans

LAST REVISION 00-00-00
DATE PLOTTED => 14-OCT-2008
TIME PLOTTED => 10:20

FOR REDUCED PLANS ORIGINAL 0 20 40 60 80
DGN FILE =>401201ua062BR0.dgn

DIST	COUNTY	ROUTE	KILOMETER POST TOTAL PROJECT	SHEET NO	TOTAL SHEETS
04	Ala	80	1.6/2.7	501 R2	643

REGISTERED ELECTRICAL ENGINEER 05/15/06 DATE

1-29-07
PLANS APPROVAL DATE

PB POWER, Inc.
A Parsons Brinckerhoff Company
303 Second St., Suite 700N
San Francisco, CA 94107-1317

REGISTERED PROFESSIONAL ENGINEER JENS ERLINGSSON No. 8249 Exp. 9/30/08 ELECTRICAL STATE OF CALIFORNIA

The State of California or its officers or agents shall not be responsible for the accuracy or completeness of electronic copies of this plan sheet.

To get to the Caltrans web site, go to http://www.dot.ca.gov

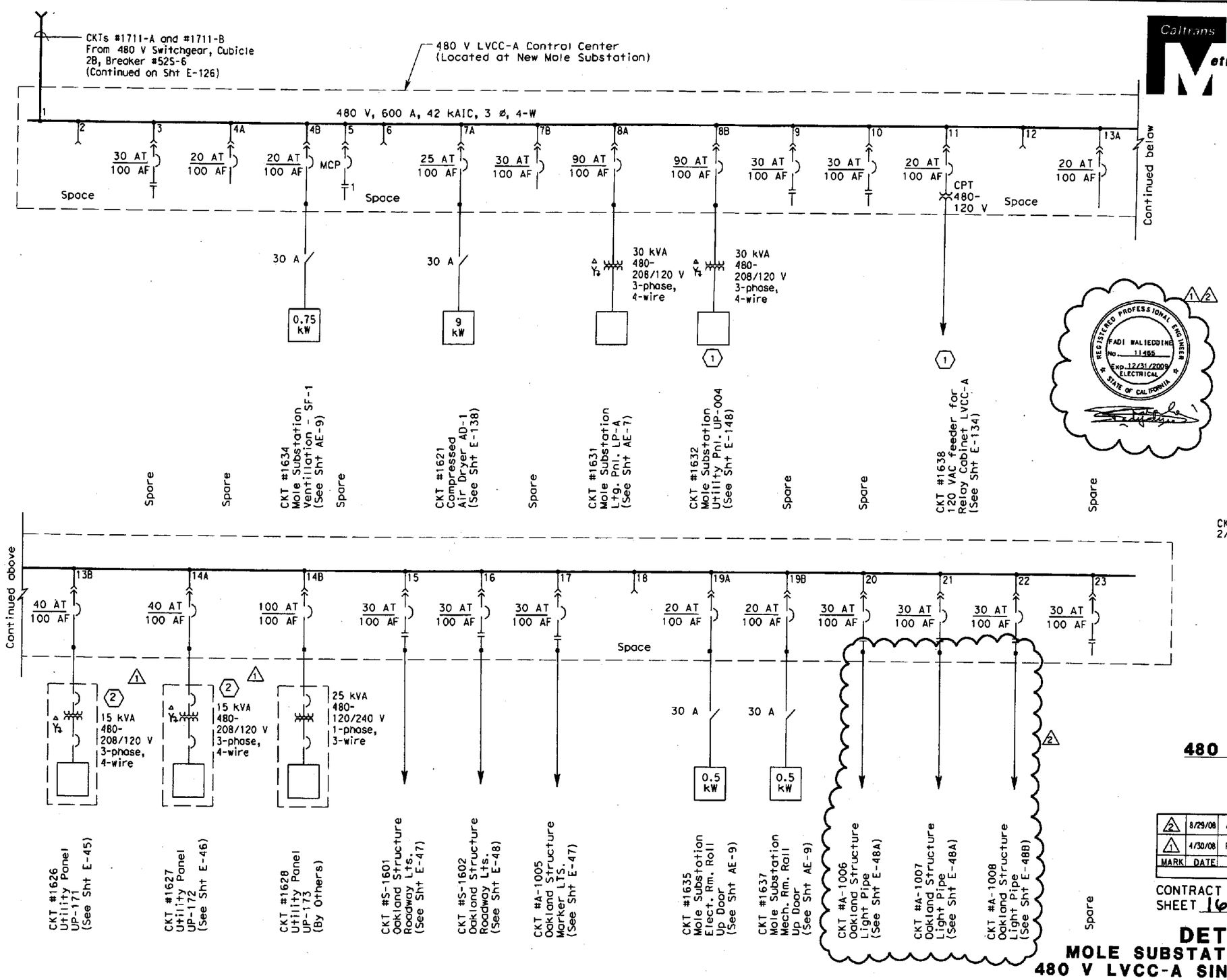

SHEET NOTES:

(1) These loads are installed in this bid item. All other feeders are provided and installed under other bid items.

(2) Enclosed in three separate stainless steel enclosures located on the Service Platform.

NOTES:

1. The combination starter units and thermal magnetic circuit breakers shall be suitable and coordinated for 42,000 RMS system fault current.
2. References:
   - For LVCC-A elevation and schedule, see sheet E-131.
   - For typical 480 V LVCC elementary diagrams, see sheets E-136 and E-137.
   - For circuit and conduit/ tray schedule, see sheets starting at E-224.

REGISTERED PROFESSIONAL ENGINEER FADI WALIEDDINE No. 11455 Exp. 12/31/2009 ELECTRICAL STATE OF CALIFORNIA

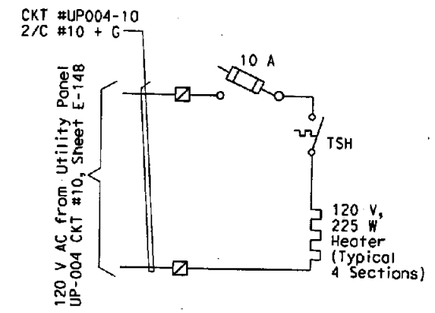

480 V LVCC-A SPACE HEATER

MARK	DATE	DESCRIPTIONS	REV	CK	CCO NO.
		REVISIONS			
2	8/29/08	Added Ckt# A-1006, A-1007, A-1008	MP	EJL	Light Pipe
1	4/30/08	Revised sheet note 2.	ECR	EJL	39

CONTRACT CHANGE ORDER NO. 70
SHEET 16 OF 36 04-0120L4 10/16/08

DETAILS
MOLE SUBSTATION ELECTRICAL
480 V LVCC-A SINGLE LINE DIAGRAM
NO SCALE

E-130

CALCULATED/ DESIGNED BY	DATE 2/06	REVISED BY
CHECKED BY	2/06	DATE REVISED

DESIGN OVERSIGHT
BEHZAD GOLEMOHAMMADI

STATE OF CALIFORNIA - DEPARTMENT OF TRANSPORTATION
Caltrans

LAST REVISION 00-00-00
DATE PLOTTED => 8/28/2008
TIME PLOTTED => 11:56:55 AM

FOR REDUCED PLANS ORIGINAL 0 20 40 60 80
DGN FILE =>t:\13103\ms\pse\otd-contract 1\cco\electrical\cco-light pipe\40120lua130r2.dgn

CUBICLE NO	VERTICAL SECTION	NAMEPLATE DESCRIPTION (SEE DETAIL)	(1) DIAGRAM TYPE	REMARKS
1	1	CKTs #1711-A and 1711-B, 600 A Incoming Cubicle		
2	1	Space		
3	1	Spare	1A	
4A	1	Spare	3B	
4B	1	CKT #1634 Ventilation SF-1	3B	
5	1	Spare	4A	
6	2	Space		
7A	2	CKT #1621 Air Dryer AD-1	3B	E-138
7B	2	Spare	3B	
8A	2	CKT #1631 Mole Substation building Ltg Pnl LP-A	3B	
8B	2	CKT #1632 Mole Substation Utility Panel UP-004	3B	
9	2	Spare	1A	
10	2	Spare	1A	
11	2	CKT #1638 120 V Feeder for Relay Cabinet LVCC-A	5A	
12	3	Space		
13A	3	Spare	3B	
13B	3	CKT #1626 Utility Panel UP-171	3B	
14A	3	CKT #1627 Utility Panel UP-172	3B	
14B	3	CKT #1628 Utility Panel UP-173	3B	
15	3	CKT #S-1601 Oakland Structure Roadway Lts.	1A	
16	3	CKT #S-1602 Oakland Structure Roadway Lts.	1A	
17	3	CKT #A-1005 Oakland Structure Marker Lts.	1A	
18	4	Space		
19A	4	CKT #1635 Mole Substation Elect. Rm. Roll Up Door	3B	
19B	4	~~CKT #1637 Mole Substation Mech. Rm. Roll Up~~ Door	3B	
20	4	CKT #A-1006 Oakland Structure Light Pipe	1A	
21	4	CKT #A-1007 Oakland Structure Light Pipe 1	1A	
22	4	CKT #A-1008 Oakland Structure Light Pipe	1A	
23	4	~~Spare~~	1A	
24	5	Relay Cabinet LVCC-A		

SCHEDULE

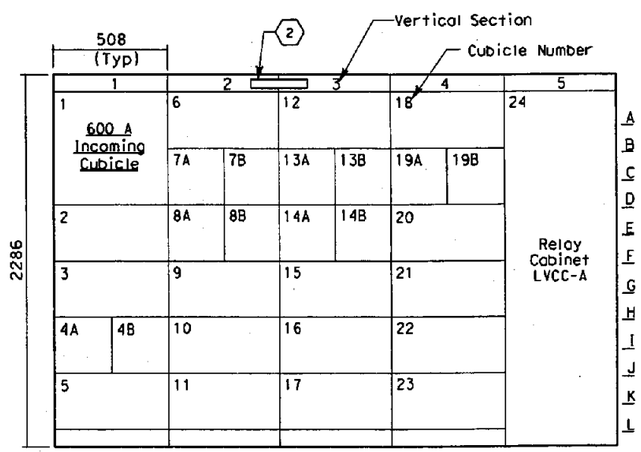

ELEVATION

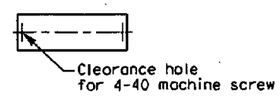

NOTE: Nameplates shall be mounted to the face of each cubicle door panel with 4-40 stainless steel machine screws. The control panel shall be drilled and tapped. (No self-tapping screws)

NAMEPLATE DETAIL

DIST	COUNTY	ROUTE	KILOMETER POST TOTAL PROJECT	SHEET No	TOTAL SHEETS
04	Ala	80	1.6/2.7	502 R1	643

REGISTERED ELECTRICAL ENGINEER 05/15/06 DATE

1-29-07
PLANS APPROVAL DATE

REGISTERED PROFESSIONAL ENGINEER JENS ERLINGSSON No. 8249 Exp. 9/30/08 ELECTRICAL STATE OF CALIFORNIA

PB POWER, Inc.
A Parsons Brinckerhoff Company
303 Second St., Suite 700N
San Francisco, CA 94107-1317

The State of California or its officers or agents shall not be responsible for the accuracy or completeness of electronic copies of this plan sheet.

To get to the Caltrans web site, go to http://www.dot.ca.gov

SHEET NOTES:

(1) For typical 480 V LVCC diagrams, see sheets E-136 and E-137.

(2) This LVCC nameplate shall read: "Oakland Approach Structure 480 V LVCC A Westbound"

NOTE:

1. References:
   - For single line diagram, see sheet E-130.

REGISTERED PROFESSIONAL ENGINEER FADI WALIEDDINE No. 11465 Exp. 12/31/2009 ELECTRICAL STATE OF CALIFORNIA

MARK	DATE	DESCRIPTIONS	REV	CK	CCO NO.
1	8/2008	Added Ckt# A-1006, A-1007, A-1008	MP	EJL	Light Pipe

REVISIONS

CONTRACT CHANGE ORDER NO. 70
SHEET 17 OF 36 04-0120L4

DETAILS
MOLE SUBSTATION ELECTRICAL
480 V LVCC-A ELEVATION AND SCHEDULE
NO SCALE

E-131

DATE	REVISED BY	DATE	CALCULATED/ DESIGNED BY	AB	DESIGN OVERSIGHT
2/06	REVISED	2/06	CHECKED BY	FK	BEHZAD GOLEMOHAMMADI

STATE OF CALIFORNIA - DEPARTMENT OF TRANSPORTATION
Caltrans

ALL DIMENSIONS ARE IN MILLIMETERS UNLESS OTHERWISE SHOWN

FOR REDUCED PLANS ORIGINAL 0 20 40 60 80

DGN FILE =>t:\13103\ms\pse\otd-contract 1\cco\electrical\cco-light pipe\401201ua131r1.dgn

LAST REVISION 00-00-00 DATE PLOTTED => 8/28/2008 TIME PLOTTED => 11:56:56 AM

DIST	COUNTY	ROUTE	KILOMETER POST TOTAL PROJECT	SHEET NO	TOTAL SHEETS
04	Ala	80	1.6/2.7	503 R2	643

REGISTERED ELECTRICAL ENGINEER 05/15/06 DATE

1-29-07
PLANS APPROVAL DATE

REGISTERED PROFESSIONAL ENGINEER JENS ERLINGSSON NO. 8249 EXP. 9/30/08 ELECTRICAL STATE OF CALIFORNIA

PB POWER, Inc.
A Parsons Brinckerhoff Company
303 Second St., Suite 700N
San Francisco, CA 94107-1317

The State of California or its officers or agents shall not be responsible for the accuracy or completeness of electronic copies of this plan sheet.

To get to the Caltrans web site, go to http://www.dot.ca.gov

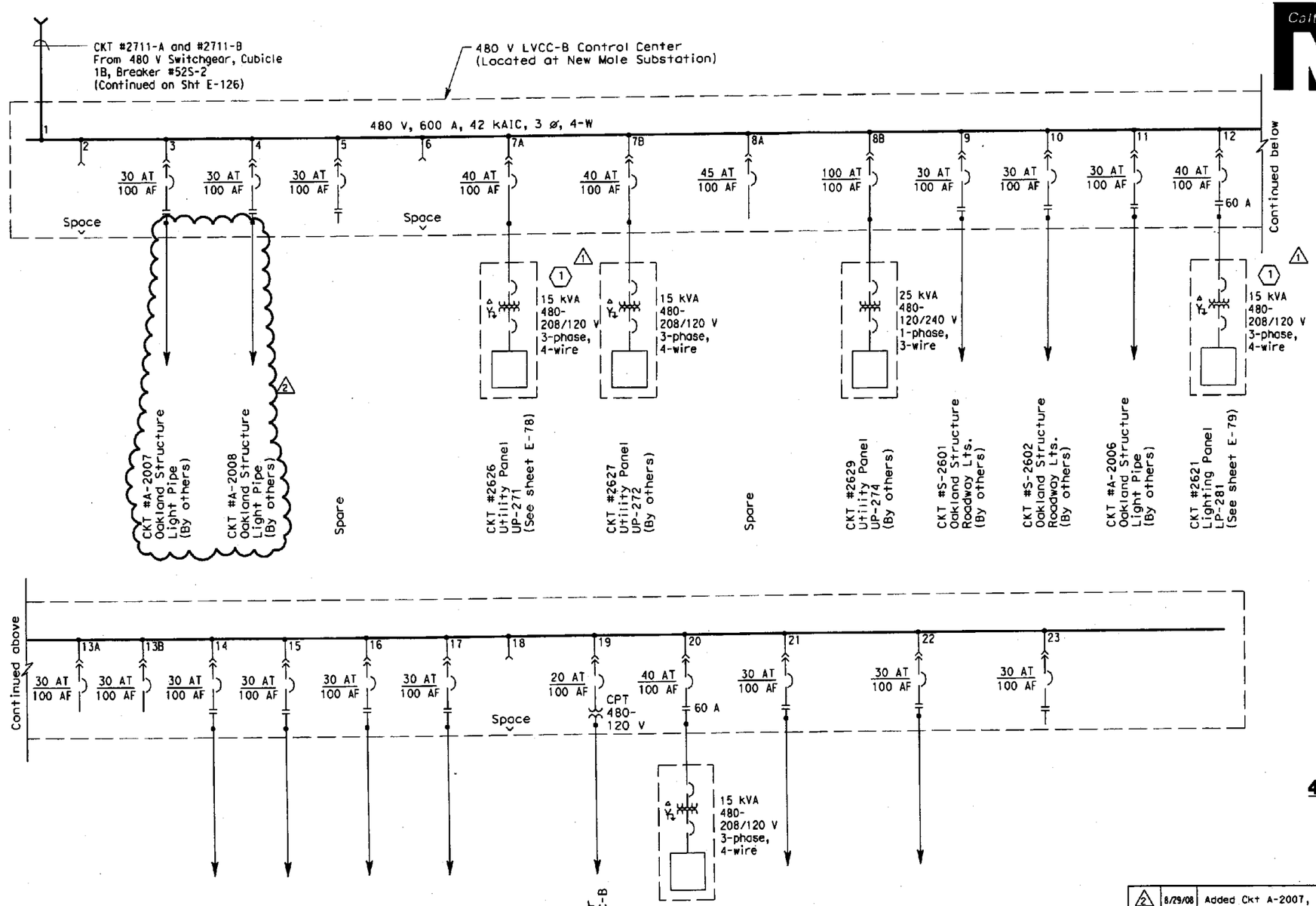

NOTES:

1. The combination starter units and thermal magnetic circuit breakers shall be suitable and coordinated for 42,000 RMS system fault current.
2. References:
   - For LVCC-B elevation and schedule, see sheet E-133.
   - For typical 480 V LVCC-B elementary diagrams, see sheets E-136 and E-137.
   - For circuit and conduit/ tray schedule, see sheets starting at E-224.

SHEET NOTES:

1 (1) Enclosed in three separate stainless steel enclosures located on the Service Platform.

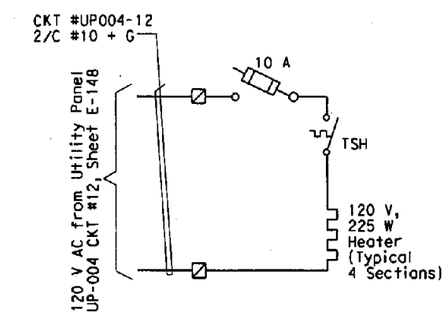

480 V LVCC-B SPACE HEATER

MARK	DATE	DESCRIPTIONS	REV	CK	CCO NO.
2	8/29/08	Added Ckt A-2007, A-2008	MP	EJL	Light Pipe
1	4/30/08	Add sheet note 1.	ECR	EJL	39

REVISIONS

CONTRACT CHANGE ORDER NO. 70
SHEET 18 OF 36 04-012014 10/16/08

REGISTERED PROFESSIONAL ENGINEER FADI WALIEDDINE NO. 11465 EXP. 12/31/2009 ELECTRICAL STATE OF CALIFORNIA

DETAILS
MOLE SUBSTATION ELECTRICAL
480 V LVCC-B SINGLE LINE DIAGRAM
NO SCALE

E-132

STATE OF CALIFORNIA - DEPARTMENT OF TRANSPORTATION
Caltrans

DESIGN OVERSIGHT: BEHZAD GOLEMOHAMMADI

CALCULATED/DESIGNED BY: AB | CHECKED BY: FK | DATE 2/06 | REVISED BY | DATE REVISED

LAST REVISION 00-00-00 | DATE PLOTTED => 8/28/2008 | TIME PLOTTED => 11:56:57 AM

FOR REDUCED PLANS ORIGINAL 0 20 40 60 80

DGN FILE =>t:\13103\ms\pse\otd-contract 1\cco\electrical\cco-light pipe\40120lual32r2.dgn

DIST	COUNTY	ROUTE	KILOMETER POST TOTAL PROJECT	SHEET NO	TOTAL SHEETS
04	Ala	80	1.6/2.7	504 R1	643

REGISTERED ELECTRICAL ENGINEER 05/15/06 DATE

1-29-07
PLANS APPROVAL DATE

PB POWER, Inc.
A Parsons Brinckerhoff Company
303 Second St., Suite 700N
San Francisco, CA 94107-1317

The State of California or its officers or agents shall not be responsible for the accuracy or completeness of electronic copies of this plan sheet.

To get to the Caltrans web site, go to http://www.dot.ca.gov

SCHEDULE

CUB. NO	VERTICAL SECTION	NAMEPLATE DESCRIPTION (SEE DETAIL)	(1) DIAGRAM TYPE	REMARKS
1	1	CKTs. 2711-A and 2711-B, 600 A Incoming Cubicle		
2	1	Space		
3	1	CKT #A-2007, Oakland Structure Light Pipe △1	1A	
4	1	CKT #A-2008, Oakland Structure Light Pipe	1A	
5	1	Space	1A	
6	2	Space		
7A	2	CKT #2626 Utility Panel UP-271	3B	
7B	2	CKT #2627 Utility Panel UP-272	3B	
8A	2	Space	3B	
8B	2	CKT #2629 Utility Panel UP-274	3B	
9	2	CKT #S-2601 Oakland Structure Roadway Lts.	1A	
10	2	~~CKT #S-2603 Oakland Structure Roadway Lts.~~	1A	
11	2	CKT #A-2006, Oakland Structure Light Pipe △1	1A	
12	3	CKT #2621 Lighting Panel LP-281	1B	
13A	3	Space	3B	
13B	3	Space	3B	
14	3	CKT #S-2608 Oakland Approach Roadway Lts.	1A	
15	3	CKT #S-2606 Roadway Lts.	1A	
16	3	CKT #S-2607 Oakland Approach Roadway Lts.	1A	
17	3	CKT #A-2005 Oakland Structure Marker Lts.	1A	
18	4	Space		
19	4	CKT #2638 120 V Feeder for Relay Cabinet LVCC-B	5A	
20	4	CKT #2622 Lighting Panel LP-282	1B	
21	4	CKT #2611 Sign Lighting	1A	
22	4	CKT #2610 Sign Lighting Sign No. 01622	1A	
23	4	Spare	1A	
24	5	Relay Cabinet LVCC-B		

SHEET NOTES:

(1) For typical 480 V LVCC diagrams, see sheets E-136 and E-137.

(2) This LVCC nameplate shall read: "Oakland Approach Structure 480 V LVCC B Eastbound"

NOTE:

1. References:
   - For single line diagram, see sheet E-132.

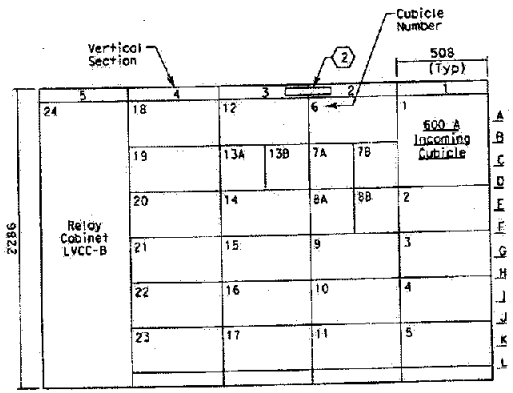

ELEVATION

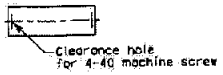

NOTE: Nameplates shall be mounted to the face of each cubicle door panel with 4-40 stainless steel machine screws. The control panel shall be drilled and tapped. (No self-tapping screws)

NAMEPLATE DETAIL

MARK	DATE	DESCRIPTIONS	REV	CK	CCO NO.
△1	8/2008	Added Ckt# A-2006, A-2007, A-2008	MP	EJL	Light Pipe

REVISIONS

CONTRACT CHANGE ORDER NO. 70
SHEET 19 OF 36 04-012014 10/16/08

DETAILS
MOLE SUBSTATION ELECTRICAL
480 V LVCC-B ELEVATION AND SCHEDULE
NO SCALE

E-133

ALL DIMENSIONS ARE IN MILLIMETERS UNLESS OTHERWISE SHOWN

0 20 40 60 80

DGN FILE =>$$$\13103\ms\pse\and-contract 1\cco\electrical\cco-light pipe\01201ua133r1.dgn

STATE OF CALIFORNIA - DEPARTMENT OF TRANSPORTATION
Caltrans

DESIGN OVERSIGHT: BEHZAD GOLEMOHAMMADI

CALCULATED/DESIGNED BY: AB DATE 2/06
CHECKED BY: FK 2/06

REVISED BY | DATE REVISED

LAST REVISION 00-00-00
DATE PLOTTED => 8/28/2008
TIME PLOTTED => 11:56:59 AM

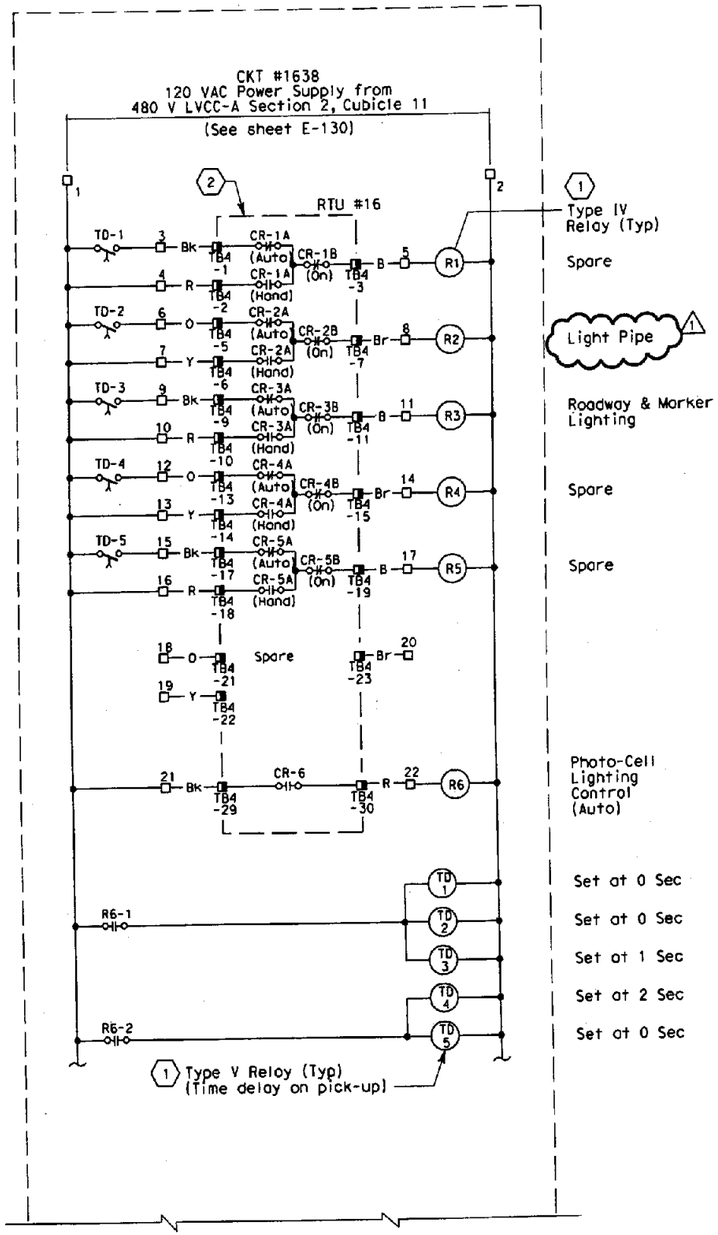

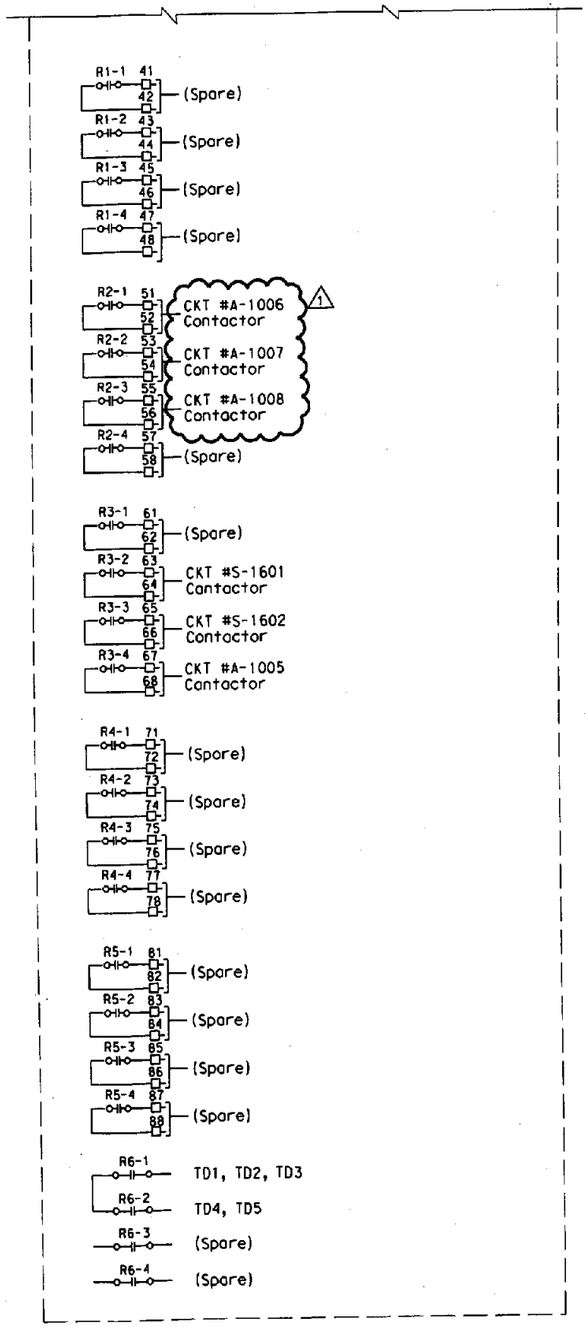

LVCC-A RELAY CABINET

DIST	COUNTY	ROUTE	KILOMETER POST TOTAL PROJECT	SHEET No.	TOTAL SHEETS
04	Ala	80	1.6/2.7	505 R1	643

REGISTERED ELECTRICAL ENGINEER 05/15/08 DATE

1-29-07
PLANS APPROVAL DATE

REGISTERED PROFESSIONAL ENGINEER JENS ERLINGSSON No. 8249 Exp. 9/30/08 ELECTRICAL STATE OF CALIFORNIA

PB POWER, inc.
A Parsons Brinckerhoff Company
303 Second St., Suite 700N
San Francisco, CA 94107-1317

The State of California or its officers or agents shall not be responsible for the accuracy or completeness of electronic copies of this plan sheet.

To get to the Caltrans web site, go to http://www.dot.ca.gov

Caltrans Metric

SHEET NOTES:

(1) For material list and circuit numbers, see sheet E-145.

(2) For SCADA RTU #16 connection diagram, see sheet E-156.

NOTE:

1. References:
   - For 480 V typical elementary diagram, see sheets E-136 and E-137.
   - For LVCC-A single line diagram, see sheet E-130.
   - For LVCC-A elevation and schedules, see sheet E-131.
   - For LVCC-A relay cabinet arrangement and connection diagram, see sheet E-145.

REGISTERED PROFESSIONAL ENGINEER FADI WALIEDDINE No. 11465 Exp. 12/31/2009 ELECTRICAL STATE OF CALIFORNIA

MARK	DATE	DESCRIPTIONS	REV	CK	CCO NO.
1	8/2908	Added Ckt# A-1006, A-1007, A-1008	MP	EJL	Light Pipe

REVISIONS

CONTRACT CHANGE ORDER NO. 70
SHEET 20 OF 36 04-0120L4 10/16/08

DETAILS
MOLE SUBSTATION ELECTRICAL
LVCC-A RELAY CABINET ELEMENTARY DIAGRAM
NO SCALE

E-134

CALCULATED/DESIGNED BY	AB	DATE 2/06
CHECKED BY	FK	2/06
REVISED BY		
DATE REVISED		

DESIGN OVERSIGHT
BEHZAD GOLEMOHAMMADI

STATE OF CALIFORNIA - DEPARTMENT OF TRANSPORTATION
Caltrans

LAST REVISION 00-00-00
DATE PLOTTED => 8/28/2008
TIME PLOTTED => 11:57:00 AM

FOR REDUCED PLANS ORIGINAL 0 20 40 60 80
DGN FILE =>t:\13103\ms\pse\otd-contract 1\cco\electrical\cco-light pipe\40120lual34r1.dgn

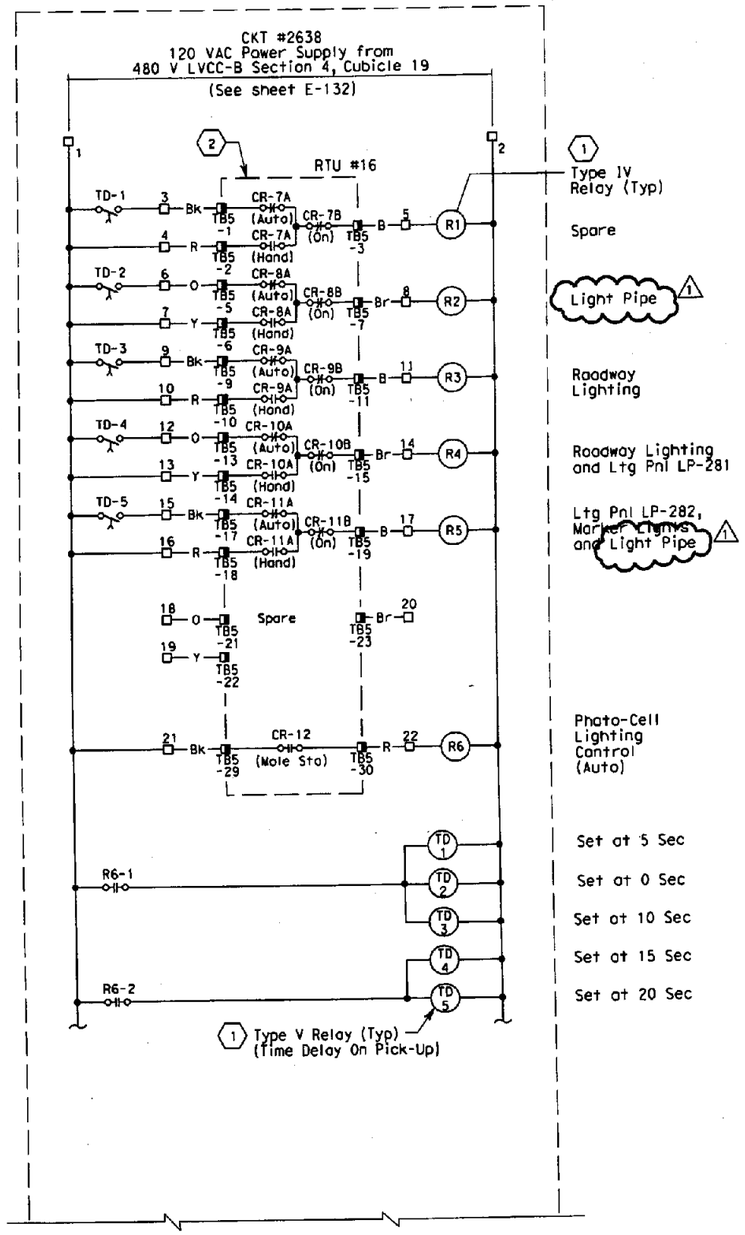

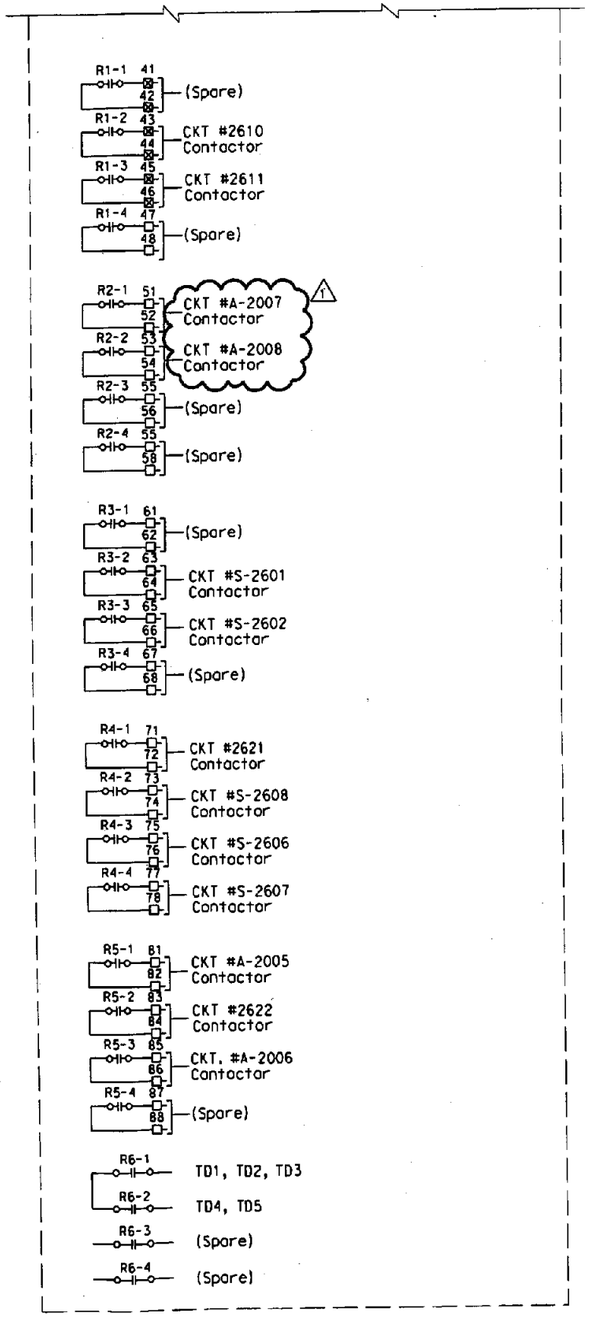

DIST	COUNTY	ROUTE	KILOMETER POST TOTAL PROJECT	SHEET NO	TOTAL SHEETS
04	Ala	80	1.6/2.7	506 R1	643

REGISTERED ELECTRICAL ENGINEER 05/15/06 DATE

1-29-07
PLANS APPROVAL DATE

REGISTERED PROFESSIONAL ENGINEER JENS ERLINGSSON No. 8249 Exp. 9/30/08 ELECTRICAL STATE OF CALIFORNIA

PB POWER, Inc.
A Parsons Brinckerhoff Company
303 Second St., Suite 700N
San Francisco, CA 94107-1317

The State of California or its officers or agents shall not be responsible for the accuracy or completeness of electronic copies of this plan sheet.

To get to the Caltrans web site, go to http://www.dot.ca.gov

SHEET NOTES:

(1) For material list and relay description, see sheet E-146.

(2) For SCADA RTU #16 connection diagram, see sheet E-156.

NOTE:

1. References:
   - For 480 V typical elementary diagram, see sheets E-136 and E-137.
   - For LVCC-B single line diagram, see sheet E-132.
   - For LVCC-B elevation and schedules, see sheet E-133.
   - For LVCC-B relay cabinet arrangement and connection diagram, see sheet E-146

REGISTERED PROFESSIONAL ENGINEER FADI WALIEDDINE No. 11465 Exp. 12/31/2009 ELECTRICAL STATE OF CALIFORNIA

MARK	DATE	DESCRIPTIONS	REV	CK	CCO NO.
1	8/2908	Added Ckt# A-2007, A-2008	MP	EJL	Light Pipe

REVISIONS

CONTRACT CHANGE ORDER NO. 70
SHEET 21 OF 36 04-0120L4 10/16/08

DETAILS
MOLE SUBSTATION ELECTRICAL
LVCC-B RELAY CABINET ELEMENTARY DIAGRAM
NO SCALE

LVCC-B RELAY CABINET

E-135

STATE OF CALIFORNIA - DEPARTMENT OF TRANSPORTATION
Caltrans

DESIGN OVERSIGHT: BEHZAD GOLEMOHAMMADI

CALCULATED/DESIGNED BY: FK
CHECKED BY: AB
DATE: 2/06
REVISED BY
DATE REVISED

LAST REVISION 00-00-00
DATE PLOTTED => 8/28/2008
TIME PLOTTED => 11:57:01 AM

FOR REDUCED PLANS ORIGINAL 0 20 40 60 80

DGN FILE =>t:\13103\ms\pse\atd-contract 1\cco\electrical\cco-light pipe\40120lual35r1.dgn

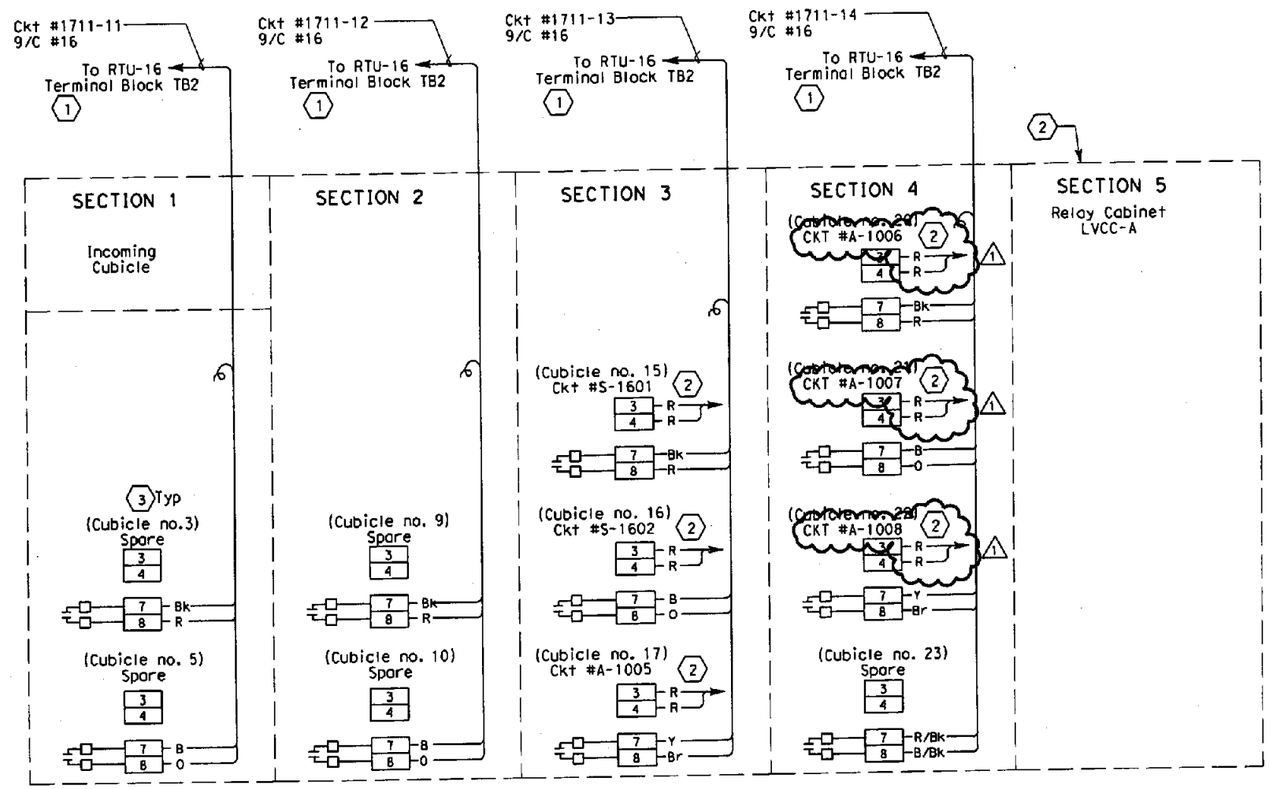

LVCC-A TO RTU-16 CONNECTION DIAGRAM

DIST	COUNTY	ROUTE	KILOMETER POST TOTAL PROJECT	SHEET NO	TOTAL SHEETS
04	Ala	80	1.6/2.7	512 R1	643

REGISTERED ELECTRICAL ENGINEER 05/15/06 DATE

1-29-07
PLANS APPROVAL DATE

REGISTERED PROFESSIONAL ENGINEER JENS ERLINGSSON No. 8249 Exp. 9/30/08 ELECTRICAL STATE OF CALIFORNIA

PB POWER, Inc.
A Parsons Brinckerhoff Company
303 Second St., Suite 700N
San Francisco, CA 94107-1317

The State of California or its officers or agents shall not be responsible for the accuracy or completeness of electronic copies of this plan sheet.

To get to the Caltrans web site, go to http://www.dot.ca.gov

Caltrans Metric

SHEET NOTES:

1. For connection to RTU#16, see sheet E-156.
2. For connection diagram of LVCC-A Relay Cabinet, see sheet E-145 (2#14)
3. For LVCC-A elevation and schedules, see sheet E-131.

NOTES:

1. Each spare conductor shall be coiled and taped at conductor ends unless terminated.
2. References:
   - For LVCC-A single line diagram, see sheet E-130.
   - For conduit/cable tray schedule, see sheets starting at E-224.
   - For LVCC-A relay cabinet elementary diagram, see sheet E-134.

REGISTERED PROFESSIONAL ENGINEER FADI WALIEDDINE No. 11465 Exp. 12/31/2009 ELECTRICAL STATE OF CALIFORNIA

MARK	DATE	DESCRIPTIONS	REV	CK	CCO NO.
1	8/2908	Added Ckt #A-1006, A-1007, A-1008	MP	EJL	Light Pipe

REVISIONS

CONTRACT CHANGE ORDER NO. 70
SHEET 22 OF 36 04-0120L4 10/16/08

DETAILS
MOLE SUBSTATION ELECTRICAL
LVCC-A CONNECTION DIAGRAM
NO SCALE

E-141

STATE OF CALIFORNIA - DEPARTMENT OF TRANSPORTATION
Caltrans

DESIGN OVERSIGHT
BEHZAD GOLEMOHAMMADI

CALCULATED/DESIGNED BY AB
CHECKED BY FK
DATE 2/06 REVISED BY
2/06 DATE REVISED

LAST REVISION 00-00-00
DATE PLOTTED => 8/28/2008
TIME PLOTTED => 11:57:03 AM

FOR REDUCED PLANS ORIGINAL 0 20 40 60 80

DGN FILE =>t:\13103\ms\pse\otd-contract 1\cco\electrical\cco-light pipe\40120lua141r1.dgn

DIST	COUNTY	ROUTE	KILOMETER POST TOTAL PROJECT	SHEET NO	TOTAL SHEETS
04	Ala	80	1.6/2.7	513 R1	643

REGISTERED ELECTRICAL ENGINEER 05/15/06 DATE

1-29-07
PLANS APPROVAL DATE

REGISTERED PROFESSIONAL ENGINEER JENS ERLINGSSON No. 8249 Exp. 9/30/08 ELECTRICAL STATE OF CALIFORNIA

PB POWER, Inc.
A Parsons Brinckerhoff Company
303 Second St., Suite 700N
San Francisco, CA 94107-1317

The State of California or its officers or agents shall not be responsible for the accuracy or completeness of electronic copies of this plan sheet.

To get to the Caltrans web site, go to http://www.dot.ca.gov

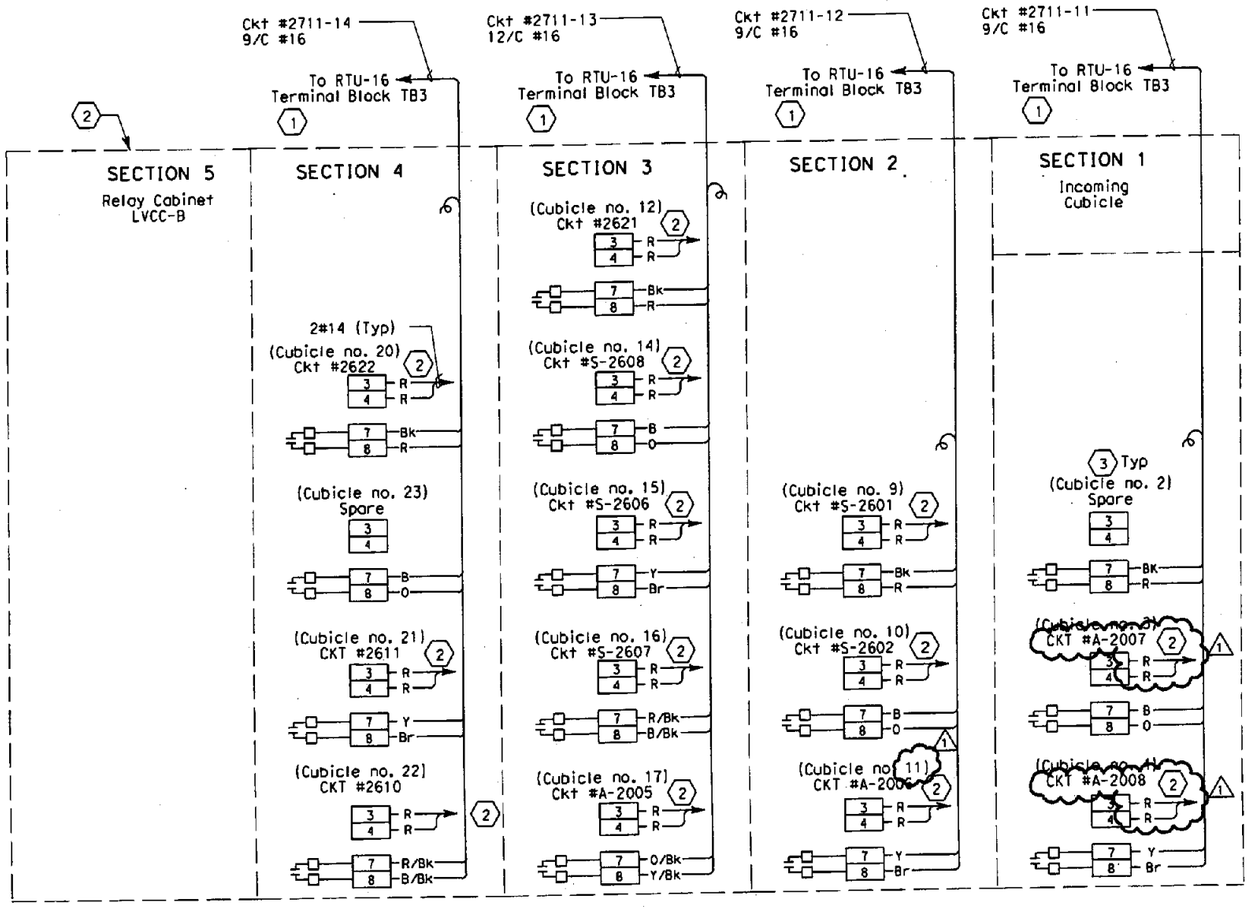

LVCC-B TO RTU-16 CONNECTION DIAGRAM

SHEET NOTES:

(1) For connection to RTU#16, see sheet E-156.

(2) For connection diagram of LVCC-B Relay Cabinet, see sheet E-146.

(3) For LVCC-B elevation and schedules, see sheet E-133.

NOTES:

1. Each spare conductor shall be coiled and taped at conductor ends unless terminated.
2. References:
   - For LVCC-B single line diagram, see sheet E-132.
   - For conduit/cable tray schedule, see sheets starting at E-224.
   - For LVCC-B relay cabinet elementary diagram, see sheet E-135.

REGISTERED PROFESSIONAL ENGINEER FADI WALIEDDINE No. 11465 Exp. 12/31/2009 ELECTRICAL STATE OF CALIFORNIA

MARK	DATE	DESCRIPTIONS	REV	CK	CCO NO.
1	8/29/08	Added Ckt# A-2007, A-2008. Revised cubicle No.	MP	EJL	Light Pipe

REVISIONS

CONTRACT CHANGE ORDER NO. 70
SHEET 23 OF 36 04-0120L4 10/16/08

DETAILS
MOLE SUBSTATION ELECTRICAL
LVCC-B CONNECTION DIAGRAM
NO SCALE

E-142

STATE OF CALIFORNIA - DEPARTMENT OF TRANSPORTATION
Caltrans

DESIGN OVERSIGHT: BEHZAD GOLEMOHAMMADI

CALCULATED/DESIGNED BY: AB — CHECKED BY: FK

DATE 2/06 — REVISED BY — DATE REVISED

LAST REVISION 00-00-00 — DATE PLOTTED => 8/29/2008 — TIME PLOTTED => 11:57:04 AM

FOR REDUCED PLANS ORIGINAL 0 20 40 60 80

DGN FILE =>t:\13103\ms\pse\otd-contract 1\cco\electrical\cco-light pipe\40120lu0142r1.dgn

DIST	COUNTY	ROUTE	KILOMETER POST TOTAL PROJECT	SHEET No	TOTAL SHEETS
04	Ala	80	1.6/2.7	516 R1	643

REGISTERED ELECTRICAL ENGINEER 05/15/06 DATE

1-29-07
PLANS APPROVAL DATE

REGISTERED PROFESSIONAL ENGINEER JENS ERLINGSSON No. 8249 Exp. 9/30/08 ELECTRICAL STATE OF CALIFORNIA

PB POWER, Inc.
A Parsons Brinckerhoff Company
303 Second St., Suite 700N
San Francisco, CA 94107-1317

The State of California or its officers or agents shall not be responsible for the accuracy or completeness of electronic copies of this plan sheet.

To get to the Caltrans web site, go to http://www.dot.ca.gov

Caltrans Metric

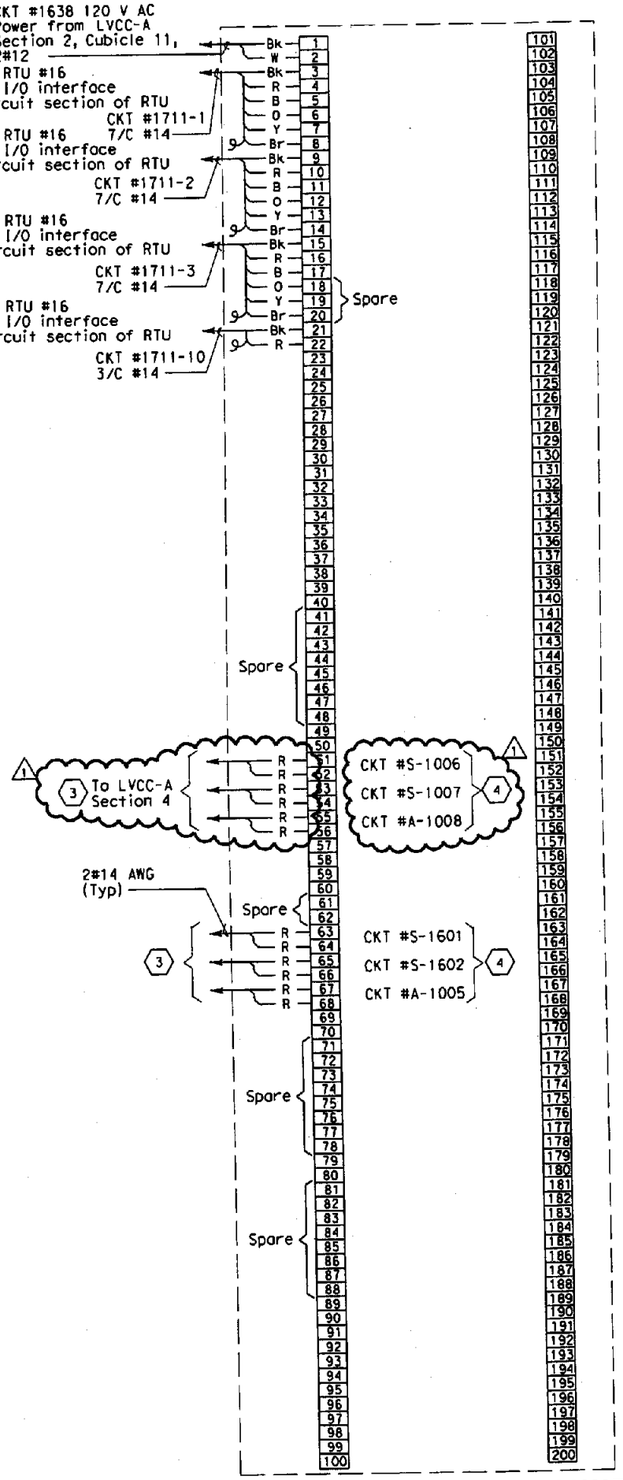

LVCC-A RELAY CABINET TERMINALS CONNECTION DIAGRAM

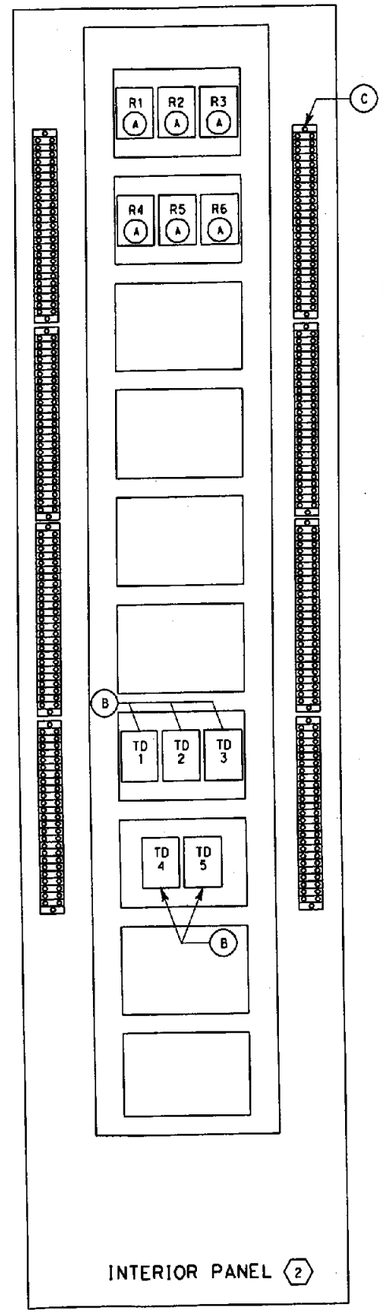

LVCC-A RELAY CABINET ARRANGEMENT

SHEET NOTES:

(1) For connection diagram to RTU #16, see sheet E-156.

(2) Interior panel is mounted inside LVCC-A relay cabinet.

(3) For continuation, see LVCC-A, section 3, sheet E-141.

(4) For relay cabinet elementary, see sheet E-134.

NOTES:

1. Each spare conductor shall be coiled and taped at conductor ends unless terminated.

2. References:
   - For typical 480 V elementary diagram, see sheets E-136.
   - For LVCC-A relay cabinet elementary diagram, see sheet E-134.
   - For LVCC-A elevation and schedules, see sheet E-131.
   - For conduit/cable tray schedules, see sheets starting at E-224.
   - For LVCC-A connection diagram, see sheet E-141.
   - For typical relay wiring diagram, see sheet E-155.

MATERIAL LIST

ITEM	DESCRIPTION	QUANTITY
(A)	Relay, general purpose, 120 VAC coil, (2.0 volt-amps) 4PDT, contact rating: 10 A (Type IV Relay)	6
(B)	Relay, timing (on delay), 120 VAC coil, (1.5 volt-amps) adj. range: 0.5-30 sec. 2PDT, 10 A contacts (Type V Relay)	5
(C)	Terminal blocks, rated 600 V, 20 A barrier type with screw terminals	200 points

MARK	DATE	DESCRIPTIONS	REV	CK	CCO NO.
1	8/2908	Added CKT #A-1006, A-1007, A-1008	MP	EJL	Light Pipe

REVISIONS

CONTRACT CHANGE ORDER NO. 70
SHEET 24 OF 36 04-0120L4 10/16/08

DETAILS
MOLE SUBSTATION ELECTRICAL
LVCC-A RELAY CABINET ARRANGEMENT AND CONNECTION DIAGRAM
NO SCALE

E-145

STATE OF CALIFORNIA - DEPARTMENT OF TRANSPORTATION
Caltrans

DESIGN OVERSIGHT: BEHZAD GOLEMOHAMMADI

CALCULATED/DESIGNED BY: AB — DATE 2/06 — REVISED BY
CHECKED BY: FK — 2/06 — DATE REVISED

LAST REVISION 00-00-00 — DATE PLOTTED => 8/28/2008 — TIME PLOTTED => 11:57:06 AM

FOR REDUCED PLANS ORIGINAL 0 20 40 60 80

DGN FILE =>t:\13103\ms\pse\atd-contract 1\cco\electrical\cco-light pipe\40120lua145r1.dgn

DIST	COUNTY	ROUTE	KILOMETER POST TOTAL PROJECT	SHEET No	TOTAL SHEETS
04	Ala	80	1.6/2.7	517 R1	643

REGISTERED ELECTRICAL ENGINEER 05/15/06 DATE

1-29-07
PLANS APPROVAL DATE

REGISTERED PROFESSIONAL ENGINEER JENS ERLINGSSON No. 8249 Exp. 9/30/08 ELECTRICAL STATE OF CALIFORNIA

PB POWER, Inc.
A Parsons Brinckerhoff Company
303 Second St., Suite 700N
San Francisco, CA 94107-1317

The State of California or its officers or agents shall not be responsible for the accuracy or completeness of electronic copies of this plan sheet.

To get to the Caltrans web site, go to http://www.dot.ca.gov

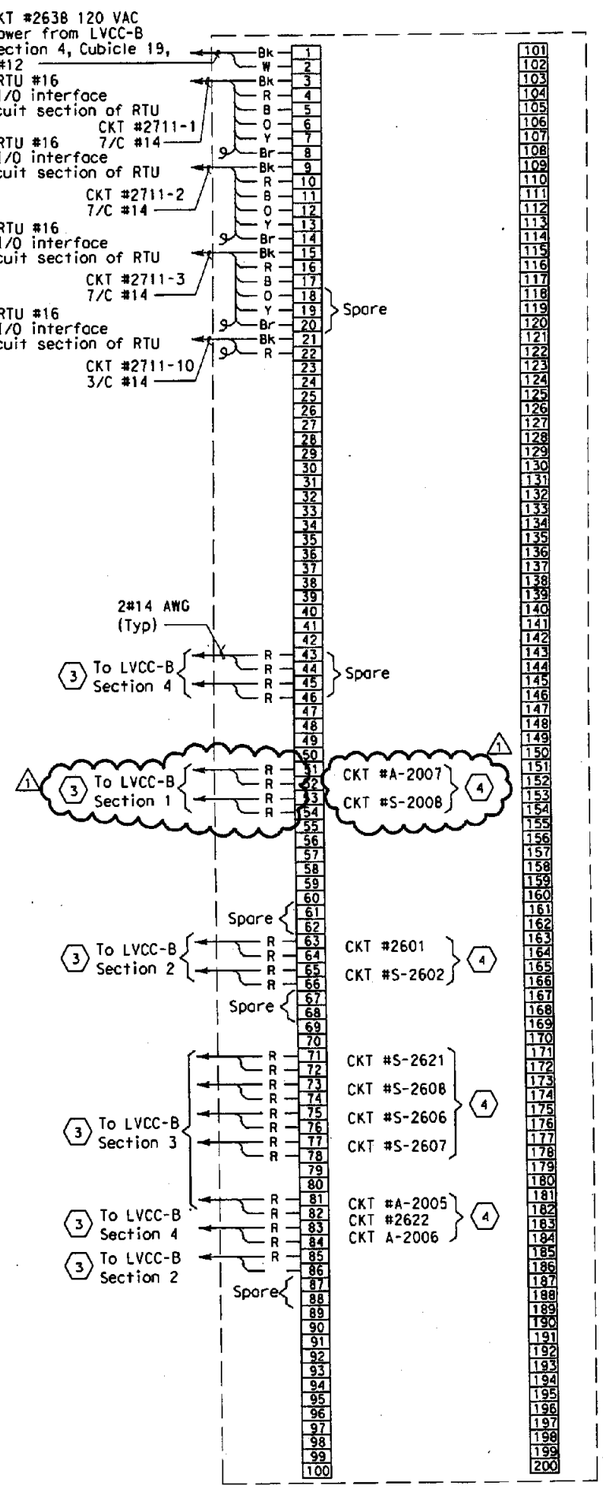

LVCC-B RELAY CABINET TERMINALS CONNECTION DIAGRAM

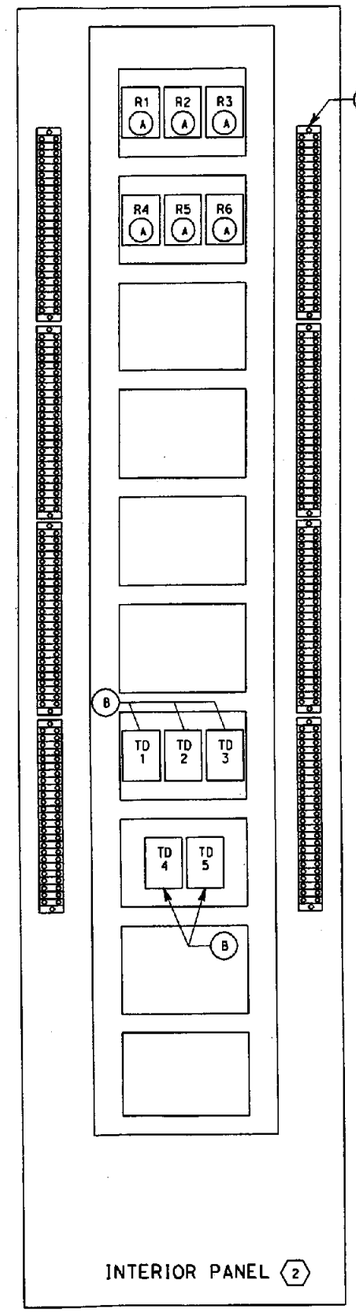

LVCC-B RELAY CABINET ARRANGEMENT

REGISTERED PROFESSIONAL ENGINEER FADI WALIEDDINE No. 11465 Exp. 12/31/2009 ELECTRICAL STATE OF CALIFORNIA

SHEET NOTES:

(1) For connection diagram to RTU #16, see sheet E-156.

(2) Interior panel is mounted inside LVCC-B relay cabinet as part of the 480 V LVCC line up.

(3) For continuation, see sheet E-142.

(4) For relay cabinet elementary, see sheet E-135.

NOTES:

1. Each spare conductors shall be coiled and taped at conductor ends unless terminated.
2. References:
   - For typical 480 V elementary diagram, see sheets E-136.
   - For LVCC-B relay cabinet elementary diagram, see sheet E-135.
   - For LVCC-B elevation and schedules, see sheet E-133.
   - For conduit/cable tray schedules, See sheets starting at E-224.
   - For LVCC-B connection diagram, see sheet E-142.
   - For typical relay wiring diagram, see sheet E-155.

MATERIAL LIST

ITEM	DESCRIPTION	QUANTITY
(A)	Relay, general purpose, 120 VAC coil, (2.0 VOLT-AMPS) 4PDT, contact rating: 10 A (Type IV Relay)	6
(B)	Relay, timing (on delay), 120 VAC coil, adj. range: 0.5-30 sec. 2PDT, 10 A contacts (Type V Relay)	5
(C)	Terminal blocks, rated 600 V, 20 A barrier type with screw terminals	200 points

MARK	DATE	DESCRIPTIONS	REV	CK	CCO NO.
1	8/29/08	Added CKT #A-2007, A-2008	MP	EJL	Light Pipe

REVISIONS

CONTRACT CHANGE ORDER NO. 70
SHEET 25 OF 36 04-0120L4 10/16/08

DETAILS
MOLE SUBSTATION ELECTRICAL
LVCC-B RELAY CABINET ARRANGEMENT AND CONNECTION DIAGRAM
NO SCALE

E-146

DATE	REVISED BY	CALCULATED/DESIGNED BY	AB	DESIGN OVERSIGHT
2/06	DATE REVISED	CHECKED BY	FK	BEHZAD GOLEMOHAMMADI

STATE OF CALIFORNIA - DEPARTMENT OF TRANSPORTATION

Caltrans

LAST REVISION 00-00-00 DATE PLOTTED => 8/28/2008 TIME PLOTTED => 11:57:08 AM

DGN FILE =>f:\13103\ms\pse\otd-contract 1\cco\electrical\cco-light pipe\40120lua146r1.dgn

DIST	COUNTY	ROUTE	KILOMETER POST TOTAL PROJECT	SHEET No.	TOTAL SHEETS
04	Ala	80	1.6/2.7	527 R1	643

REGISTERED ELECTRICAL ENGINEER — DATE 05/15/06

1-29-07
PLANS APPROVAL DATE

REGISTERED PROFESSIONAL ENGINEER — JENS ERLINGSSON — No. 8249 — Exp. 9/30/08 — ELECTRICAL — STATE OF CALIFORNIA

PB POWER, inc.
A Parsons Brinckerhoff Company
303 Second St., Suite 700N
San Francisco, CA 94107-1317

The State of California or its officers or agents shall not be responsible for the accuracy or completeness of electronic copies of this plan sheet.

To get to the Caltrans web site, go to: http://www.dot.ca.gov

Caltrans Metric

MARK	DATE	DESCRIPTIONS	REV	CK	CCO NO.
1	8/29/08	Added CKT #A-2007, A-2008, #A-1006, #A-1007, #A-1008	MP	EJL	Light Pipe

REVISIONS

CONTRACT CHANGE ORDER NO. 70
SHEET 26 OF 36 04-012014 10/16/08

NOTES:

1. All spare conductors shall be coiled and taped at conductor ends unless terminated.
2. Terminate cable shields to low level ground bus.
3. References:
   - For UP-004 panel schedule, see Sheet E-148.
   - For relay configuration, see Sheet E-155.
   - For 480 V LVCC elevation and schedules, see sheets E-131 and E-132.
   - For conduit/cable tray schedules, see sheets starting at E-224.

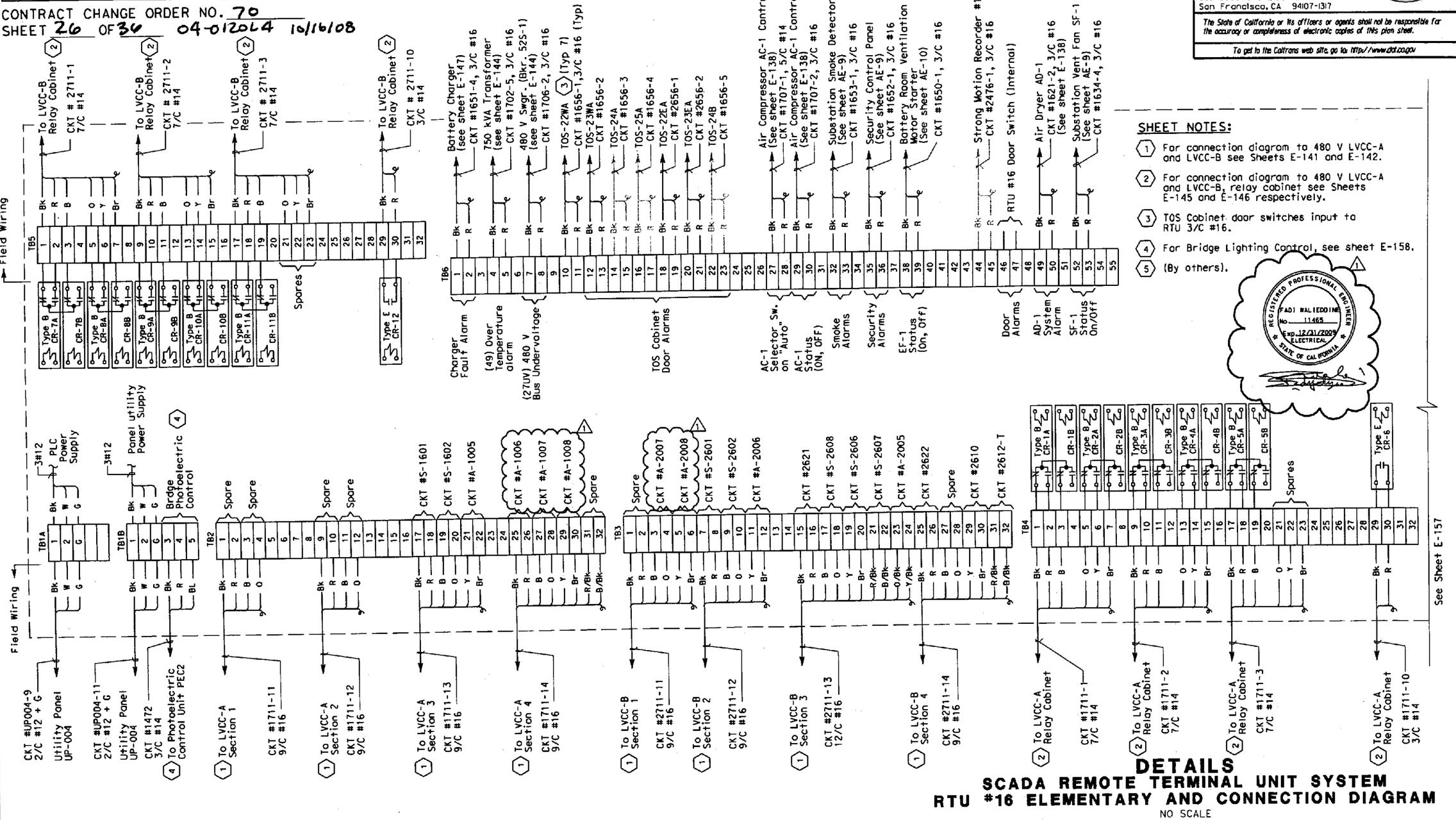

SHEET NOTES:

(1) For connection diagram to 480 V LVCC-A and LVCC-B see Sheets E-141 and E-142.

(2) For connection diagram to 480 V LVCC-A and LVCC-B, relay cabinet see Sheets E-145 and E-146 respectively.

(3) TOS Cabinet door switches input to RTU 3/C #16.

(4) For Bridge Lighting Control, see sheet E-158.

(5) (By others).

REGISTERED PROFESSIONAL ENGINEER — FADI WALIEDDINE — No. 11465 — Exp. 12/31/2009 — ELECTRICAL — STATE OF CALIFORNIA

DETAILS
SCADA REMOTE TERMINAL UNIT SYSTEM
RTU #16 ELEMENTARY AND CONNECTION DIAGRAM
NO SCALE

E-156

STATE OF CALIFORNIA - DEPARTMENT OF TRANSPORTATION
Caltrans
DESIGN OVERSIGHT: BEHZAD GOLEMOHAMMADI
CALCULATED/DESIGNED BY | CHECKED BY | FK AB | DATE 2/06 2/06 | REVISED BY | DATE REVISED

LAST REVISION 00-00-00 | DATE PLOTTED => 8/28/2008 | TIME PLOTTED => 11:57:10 AM

FOR REDUCED PLANS ORIGINAL 0 20 40 60 80

DGN FILE =>t:\13103\ms\pse\otd-contract 1\cco\electrical\cco-light pipe\401201ua156r1.dgn

DIST	COUNTY	ROUTE	KILOMETER POST TOTAL PROJECT	SHEET NO	TOTAL SHEETS
04	Ala	80	1.6/2.7	577 R1	643

REGISTERED ELECTRICAL ENGINEER 05/15/06 DATE

1-29-07
PLANS APPROVAL DATE

REGISTERED PROFESSIONAL ENGINEER JENS ERLINGSSON No. 8249 Exp. 9/30/08 ELECTRICAL STATE OF CALIFORNIA

PB POWER, Inc.
A Parsons Brinckerhoff Company
303 Second St., Suite 700N
San Francisco, CA 94107-1317

The State of California or its officers or agents shall not be responsible for the accuracy or completeness of electronic copies of this plan sheet.

To get to the Caltrans web site, go to: http://www.dot.ca.gov

Caltrans Metric

REGISTERED PROFESSIONAL ENGINEER FADI WALIEDDINE No. 11465 Exp. 12/31/2009 ELECTRICAL STATE OF CALIFORNIA

MARK	DATE	DESCRIPTIONS	REV	CK	CCO NO.
2	8/29/08	Deleted Cable/CKTS 1801 and 1802	MP	EJL	18S1
1	8/29/08	Added cable/ckts A-1006-1, A1007-1, and A-1008-1, conduits 1301A, 1301B, 1302A, 1311A and 1311B	JH	EJL	Light Pipe

REVISIONS

CONTRACT CHANGE ORDER NO. 70
SHEET 27 OF 36 04-012014
10/23/08

CONDUIT DATA

ROADWAY AND GIRDER LEVEL WESTBOUND

Conduit No	Reference	Size	Type	Total Fill (mm²)	Allowable Fill (mm²)	Cable Area (mm²)	Included Cable No.	Conductor Type
1200	E-10, E-11	41	RGS conduit	~~98.10~~	~~708.28~~	~~0.00~~	~~Pull Rope 1~~	~~Soft-Fiber Polyester~~
				0.00	534.55	~~98.10~~	~~1801~~	~~1-2 pair, shielded #18 with IS/OA, 600 V, PVC~~
1201	E-11	41	RGS conduit	~~98.10~~	~~708.28~~	~~98.10~~	~~1801~~	~~1-2 pair, shielded #18 with IS/OA, 600 V, PVC~~
				0.00	534.55	0.00	Pull Rope 1	Soft-Fiber Polyester
1202	E-11	41	RGS conduit	~~98.10~~	~~708.28~~	~~98.10~~	~~1801~~	~~1-2 pair, shielded #18 with IS/OA, 600 V, PVC~~
				0.00	534.55	0.00	Pull Rope 1	Soft-Fiber Polyester
1210	E-11, E-12	41	RGS conduit	98.10	708.28	98.10	1803	1-2 pair, shielded #18 with IS/OA, 600 V, PVC
						0.00	Pull Rope 1	Soft-Fiber Polyester
1211	E-12	41	RGS conduit	98.10	708.28	0.00	Pull Rope 1	Soft-Fiber Polyester
						98.10	1803	1-2 pair, shielded #18 with IS/OA, 600 V, PVC
1301	E-10, E-11	41	RGS conduit	~~49.21~~	~~534.55~~	~~49.21~~	~~UP171-2B~~	~~2 + 1 gnd #12, #12, 600 V, RHH/RHW insulation~~
				0.00		0.00	Pull Rope 1	Soft-Fiber Polyester
1301A	E-10	41	RGS conduit	0.00	534.55	0.00	Pull Rope 1	Soft-Fiber Polyester
1301B	E-10, E-11	41	RGS conduit	0.00	534.55	0.00	Pull Rope 1	Soft-Fiber Polyester
1302	E-11	41	RGS conduit	49.21	534.55	0.00	Pull Rope 1	Soft-Fiber Polyester
						49.21	UP171-2B	2 + 1 gnd #12, #12, 600 V, RHH/RHW insulation
1302A	E-11	41	RGS conduit	49.21	534.55	0.00	Pull Rope 1	Soft-Fiber Polyester
						49.21	UP171-2B	2 + 1 gnd #12, #12, 600 V, RHH/RHW insulation
1303	E-11	41	RGS conduit	49.21	534.55	49.21	UP171-2B	2 + 1 gnd #12, #12, 600 V, RHH/RHW insulation
						0.00	Pull Rope 1	Soft-Fiber Polyester
1310	E-11, E-12	41	RGS conduit	0.00	534.55	0.00	Pull Rope 1	Soft-Fiber Polyester
1311	E-12	41	RGS conduit	0.00	534.55	0.00	Pull Rope 1	Soft-Fiber Polyester
1311A	E-12	41	RGS conduit	0.00	534.55	0.00	Pull Rope 1	Soft-Fiber Polyester
1311B	E-12	41	RGS conduit	0.00	534.55	0.00	Pull Rope 1	Soft-Fiber Polyester
1401	E-10, E-11	41	RGS conduit	133.19	534.55	0.00	Pull Rope 1	Soft-Fiber Polyester
						133.19	A-1006-1	3 + 1 gnd #8, #10, 600 V RHH/RHW insulation
1402	E-11	41	RGS conduit	133.19	534.55	0.00	Pull Rope 1	Soft-Fiber Polyester
						133.19	A-1007-1	3 + 1 gnd #8, #10, 600 V RHH/RHW insulation
1403	E-11	41	RGS conduit	133.19	534.55	0.00	Pull Rope 1	Soft-Fiber Polyester
						133.19	A-1007-1	3 + 1 gnd #8, #10, 600 V RHH/RHW insulation
1410	E-11, E-12	41	RGS conduit	212.85	534.55	0.00	Pull Rope 1	Soft-Fiber Polyester
						212.85	A-1008-1	3 + 1 gnd #6, #8, 600 V RHH/RHW insulation
1411	E-12	41	RGS conduit	212.85	534.55	0.00	Pull Rope 1	Soft-Fiber Polyester
						212.85	A-1008-1	3 + 1 gnd #6, #8, 600 V RHH/RHW insulation
1600	E-10	41	RGS conduit	~~98.10~~	~~708.28~~	0.00	Pull Rope 1	Soft-Fiber Polyester
				0.00	534.55	~~98.10~~	~~1802~~	~~1-2 pair, shielded #18 with IS/OA, 600 V, PVC~~
1601	E-10, E-11	41	RGS conduit	~~98.10~~	~~708.28~~	~~98.10~~	~~1802~~	~~1-2 pair, shielded #18 with IS/OA, 600 V, PVC~~
				0.00	534.55	0.00	Pull Rope 1	Soft-Fiber Polyester
1602	E-11	41	RGS conduit	~~98.10~~	~~708.28~~	0.00	Pull Rope 1	Soft-Fiber Polyester
				0.00	534.55	~~98.10~~	~~1802~~	~~1-2 pair, shielded #18 with IS/OA, 600 V, PVC~~
1603	E-11	41	RGS conduit	~~98.10~~	~~708.28~~	0.00	Pull Rope 1	Soft-Fiber Polyester
				0.00	534.55	~~98.10~~	~~1802~~	~~1-2 pair, shielded #18 with IS/OA, 600 V, PVC~~
1620	E-11, E-12	41	RGS conduit	98.10	708.28	98.10	1804	1-2 pair, shielded #18 with IS/OA, 600 V, PVC
						0.00	Pull Rope 1	Soft-Fiber Polyester
1621	E-12	41	RGS conduit	98.10	708.28	98.10	1804	1-2 pair, shielded #18 with IS/OA, 600 V, PVC
						0.00	Pull Rope 1	Soft-Fiber Polyester
1701	E-10	41	RGS conduit	388.74	534.55	0.00	Pull Rope 1	Soft-Fiber Polyester
						212.85	S-1601-1	3 + 1 gnd #6, #8, 600 V, RHH/RHW insulation
						175.89	A-1005-1	3-1/C #6, 600 V, RHH/RHW insulation
1702	E-10	41	RGS conduit	388.74	534.55	0.00	Pull Rope 1	Soft-Fiber Polyester
						175.89	A-1005-1	3-1/C #6, 600 V, RHH/RHW insulation
						212.85	S-1601-1	3 + 1 gnd #6, #8, 600 V, RHH/RHW insulation
1703	E-10	41	RGS conduit	388.74	534.55	212.85	S-1601-1	3 + 1 gnd #6, #8, 600 V, RHH/RHW insulation
						175.89	A-1005-1	3-1/C #6, 600 V, RHH/RHW insulation
						0.00	Pull Rope 1	Soft-Fiber Polyester
1704	E-10, E-11	41	RGS conduit	388.74	534.55	0.00	Pull Rope 1	Soft-Fiber Polyester
						212.85	S-1601-1	3 + 1 gnd #6, #8, 600 V, RHH/RHW insulation
						175.89	A-1005-1	3-1/C #6, 600 V, RHH/RHW insulation

CONDUIT DATA

ROADWAY AND GIRDER LEVEL WESTBOUND

Conduit No	Reference	Size	Type	Total Fill (mm²)	Allowable Fill (mm²)	Cable Area (mm²)	Included Cable No.	Conductor Type
1705	E-11	41	RGS conduit	388.74	534.55	212.85	S-1601-2	3 + 1 gnd #6, #8, 600 V, RHH/RHW insulation
						0.00	Pull Rope 1	Soft-Fiber Polyester
						175.89	A-1005-1-1	3-1/C #6, 600 V, RHH/RHW insulation
1706	E-11	41	RGS conduit	388.74	534.55	175.89	A-1005-1-1	3-1/C #6, 600 V, RHH/RHW insulation
						212.85	S-1601-2	3 + 1 gnd #6, #8, 600 V, RHH/RHW insulation
						0.00	Pull Rope 1	Soft-Fiber Polyester
1707	E-11	41	RGS conduit	388.74	534.55	175.89	A-1005-1-1	3-1/C #6, 600 V, RHH/RHW insulation
						212.85	S-1601-2	3 + 1 gnd #6, #8, 600 V, RHH/RHW insulation
						0.00	Pull Rope 1	Soft-Fiber Polyester
1708	E-11	41	RGS conduit	388.74	534.55	0.00	Pull Rope 1	Soft-Fiber Polyester
						212.85	S-1601-2	3 + 1 gnd #6, #8, 600 V, RHH/RHW insulation
						175.89	A-1005-1-1	3-1/C #6, 600 V, RHH/RHW insulation
1709	E-11	41	RGS conduit	175.89	534.55	175.89	A-1005-2	3-1/C #6, 600 V, RHH/RHW insulation
						0.00	Pull Rope 1	Soft-Fiber Polyester
1721	E-11, E-12	41	RGS conduit	388.74	534.55	212.85	S-1602-1	3 + 1 gnd #6, #8, 600 V, RHH/RHW insulation
						0.00	Pull Rope 1	Soft-Fiber Polyester
						175.89	A-1005-2	3-1/C #6, 600 V, RHH/RHW insulation
1722	E-12	41	RGS conduit	388.74	534.55	212.85	S-1602-1	3 + 1 gnd #6, #8, 600 V, RHH/RHW insulation
						175.89	A-1005-2	3-1/C #6, 600 V, RHH/RHW insulation
						0.00	Pull Rope 1	Soft-Fiber Polyester
1723	E-12	41	RGS conduit	388.74	534.55	212.85	S-1602-2	3 + 1 gnd #6, #8, 600 V, RHH/RHW insulation
						175.89	A-1005-2-1	3-1/C #6, 600 V, RHH/RHW insulation
						0.00	Pull Rope 1	Soft-Fiber Polyester
1724	E-12	41	RGS conduit	388.74	534.55	212.85	S-1602-2	3 + 1 gnd #6, #8, 600 V, RHH/RHW insulation
						175.89	A-1005-2-1	3-1/C #6, 600 V, RHH/RHW insulation
						0.00	Pull Rope 1	Soft-Fiber Polyester
1725	E-12	41	RGS conduit	388.74	534.55	212.85	S-1602-2	3 + 1 gnd #6, #8, 600 V, RHH/RHW insulation
						175.89	A-1005-2-1	3-1/C #6, 600 V, RHH/RHW insulation
						0.00	Pull Rope 1	Soft-Fiber Polyester
1726	E-12	41	RGS conduit	388.74	534.55	0.00	Pull Rope 1	Soft-Fiber Polyester
						175.89	A-1005-2-1	3-1/C #6, 600 V, RHH/RHW insulation
						212.85	S-1602-2	3 + 1 gnd #6, #8, 600 V, RHH/RHW insulation
1727	E-12	41	RGS conduit	388.74	534.55	175.89	A-1005-2-1	3-1/C #6, 600 V, RHH/RHW insulation
						212.85	S-1602-2	3 + 1 gnd #6, #8, 600 V, RHH/RHW insulation
						0.00	Pull Rope 1	Soft-Fiber Polyester
1801	E-10	41	RGS conduit	49.21	534.55	49.21	UP172-2B	2 + 1 gnd #12, #12, 600 V, RHH/RHW insulation
						0.00	Pull Rope 1	Soft-Fiber Polyester
1802	E-10	41	RGS conduit	49.21	534.55	49.21	UP172-2B	2 + 1 gnd #12, #12, 600 V, RHH/RHW insulation
						0.00	Pull Rope 1	Soft-Fiber Polyester
1803	E-10	41	RGS conduit	49.21	534.55	0.00	Pull Rope 1	Soft-Fiber Polyester
						49.21	UP172-2B	2 + 1 gnd #12, #12, 600 V, RHH/RHW insulation

For continuation, see next sheet.

DETAILS
CONDUIT AND TRAY SCHEDULE

E-224

STATE OF CALIFORNIA - DEPARTMENT OF TRANSPORTATION
Caltrans

DESIGN OVERSIGHT: BEHZAD GOLEMOHAMMADI

CALCULATED/DESIGNED BY	CHECKED BY	REVISED BY	DATE REVISED
FK	AB		
DATE 2/06	2/06		

LAST REVISION 00-00-00

DATE PLOTTED => 10/23/2008
TIME PLOTTED => 9:54:02 AM

FOR REDUCED PLANS ORIGINAL SCALE IS IN MILLIMETERS 0 20 40 60 80

DGN FILE =>T:\13103\MS\pse\OTO-Contract 1\CCO\Electrical\CCO-Light Pipe\40120luo224R1.dgn
USERNAME =>reyesl

CU 04251 | EA 0120L1

DIST	COUNTY	ROUTE	KILOMETER POST TOTAL PROJECT	SHEET No	TOTAL SHEETS
04	Ala	80	1.6/2.7	578 R1	643

REGISTERED ELECTRICAL ENGINEER 05/15/06 DATE

1-29-07
PLANS APPROVAL DATE

REGISTERED PROFESSIONAL ENGINEER JENS ERLINGSSON No. 8249 Exp. 9/30/08 ELECTRICAL STATE OF CALIFORNIA

PB POWER, Inc.
A Parsons Brinckerhoff Company
303 Second St., Suite 700N
San Francisco, CA 94107-1317

The State of California or its officers or agents shall not be responsible for the accuracy or completeness of electronic copies of this plan sheet.

To get to the Caltrans web site, go to: http://www.dot.ca.gov

Caltrans Metric

CONDUIT DATA

ROADWAY AND GIRDER LEVEL WESTBOUND

Conduit No	Reference	Size	Type	Total Fill (mm²)	Allowable Fill (mm²)	Cable Area (mm²)	Included Cable No.	Conductor Type
1804	E-10, E-11	41	RGS conduit	49.21	534.55	0.00	Pull Rope 1	Soft-Fiber Polyester
						49.21	UP172-2B	2+1gnd #12,#12, 600 V, RHH/RHW insulation
1805	E-11	41	RGS conduit	49.21	534.55	0.00	Pull Rope 1	Soft-Fiber Polyester
						49.21	UP172-2B	2+1gnd #12,#12, 600 V, RHH/RHW insulation
1806	E-11	41	RGS conduit	49.21	534.55	49.21	UP172-2B	2+1gnd #12,#12, 600 V, RHH/RHW insulation
						0.00	Pull Rope 1	Soft-Fiber Polyester
1807	E-11	41	RGS conduit	49.21	534.55	49.21	UP172-2B	2+1gnd #12,#12, 600 V, RHH/RHW insulation
						0.00	Pull Rope 1	Soft-Fiber Polyester
1808	E-11	41	RGS conduit	49.21	534.55	0.00	Pull Rope 1	Soft-Fiber Polyester
						49.21	UP172-2B	2+1gnd #12,#12, 600 V, RHH/RHW insulation
1809	E-11	41	RGS conduit	49.21	534.55	0.00	Pull Rope 1	Soft-Fiber Polyester
						49.21	UP172-2B	2+1gnd #12,#12, 600 V, RHH/RHW insulation
1821	E-11, E-12	41	RGS conduit	49.21	534.55	49.21	UP172-2B	2+1gnd #12,#12, 600 V, RHH/RHW insulation
						0.00	Pull Rope 1	Soft-Fiber Polyester
1822	E-12	41	RGS conduit	49.21	534.55	49.21	UP172-2B	2+1gnd #12,#12, 600 V, RHH/RHW insulation
						0.00	Pull Rope 1	Soft-Fiber Polyester
1823	E-12	41	RGS conduit	0.00	534.55	0.00	Pull Rope 1	Soft-Fiber Polyester
1824	E-12	41	RGS conduit	0.00	534.55	0.00	Pull Rope 1	Soft-Fiber Polyester
1825	E-12	41	RGS conduit	0.00	534.55	0.00	Pull Rope 1	Soft-Fiber Polyester
1826	E-12	41	RGS conduit	0.00	534.55	0.00	Pull Rope 1	Soft-Fiber Polyester
1827	E-12	41	RGS conduit	0.00	534.55	0.00	Pull Rope 1	Soft-Fiber Polyester
1T25	E-30	610	152 mm siderail ladder tray	2403.42	16774.16	1201.71	1473-26	50 pair #18, shielded pairs, IS/OS shield 600 V, XLPE insul., PVC jacket
						1201.71	1474-26	50 pair #18, shielded pairs, IS/OS shield 600 V, XLPE insul., PVC jacket
1T40	E-30	305	152 mm siderail ladder tray	2493.11	8387.08	366.10	1627	1-3/C+gnd #4, 600 V, EPR insulation
						324.29	A-1005	1-3/C+gnd #6, 600 V, EPR insulation
						366.10	1626	1-3/C+gnd #4, 600 V, EPR insulation
						324.29	S-1601	1-3/C+gnd #6, 600 V, EPR insulation
						324.29	A-1002	1-3/C+gnd #6, 600 V, EPR insulation
						262.68	A-1006	1-3/C+gnd #8, 600 V, EPR insulation
						262.68	A-1007	1-3/C+gnd #8, 600 V, EPR insulation
						324.29	A-1008	1-3/C+gnd #6, 600 V, EPR insulation
						1201.71	1473-24	50 pair #18, shielded pairs, IS/OS shield 600 V, XLPE insul., PVC jacket
1T43	E-23	305	152 mm siderail ladder tray	2403.42	8387.08	1201.71	1474-24	50 pair #18, shielded pairs, IS/OS shield 600 V, XLPE insul., PVC jacket
4300	E-25, E-24	103	RGS conduit	0.00	3324.51	0.00	Pull Rope 1	Soft-Fiber Polyester
4301	E-25, E-24	103	RGS conduit	0.00	3324.51	0.00	Pull Rope 1	Soft-Fiber Polyester
4302	E-25, E-24	103	RGS conduit	0.00	3324.51	0.00	Pull Rope 1	Soft-Fiber Polyester
4303	E-25, E-24	103	RGS conduit	0.00	3324.51	0.00	Pull Rope 1	Soft-Fiber Polyester
4304	E-25, E-24	103	RGS conduit	0.00	3324.51	0.00	Pull Rope 1	Soft-Fiber Polyester
4305	E-25, E-24	103	RGS conduit	0.00	3324.51	0.00	Pull Rope 1	Soft-Fiber Polyester
4306	E-25, E-24	103	RGS conduit	0.00	3324.51	0.00	Pull Rope 1	Soft-Fiber Polyester
4307	E-30	103	RGS conduit	0.00	3324.51	0.00	Pull Rope 1	Soft-Fiber Polyester
4308	E-30	103	RGS conduit	0.00	3324.51	0.00	Pull Rope 1	Soft-Fiber Polyester
4309	E-30	103	RGS conduit	0.00	3324.51	0.00	Pull Rope 1	Soft-Fiber Polyester
4310	E-30	103	RGS conduit	0.00	3324.51	0.00	Pull Rope 1	Soft-Fiber Polyester
4311	E-30	103	RGS conduit	0.00	2576.49	0.00	Pull Rope 1	Soft-Fiber Polyester
4313	E-26, E-25	103	RGS conduit	0.00	3324.51	0.00	Pull Rope 1	Soft-Fiber Polyester
4314	E-26, E-25	103	RGS conduit	0.00	3324.51	0.00	Pull Rope 1	Soft-Fiber Polyester
4315	E-26, E-25	103	RGS conduit	0.00	3324.51	0.00	Pull Rope 1	Soft-Fiber Polyester
4316	E-26, E-25	103	RGS conduit	0.00	3324.51	0.00	Pull Rope 1	Soft-Fiber Polyester
4317	E-26, E-25	103	RGS conduit	0.00	3324.51	0.00	Pull Rope 1	Soft-Fiber Polyester
4320	E-25, E-24	103	RGS conduit	0.00	3324.51	0.00	Pull Rope 1	Soft-Fiber Polyester
4321	E-25, E-24	103	RGS conduit	0.00	3324.51	0.00	Pull Rope 1	Soft-Fiber Polyester

CONDUIT DATA

ROADWAY AND GIRDER LEVEL WESTBOUND

Conduit No	Reference	Size	Type	Total Fill (mm²)	Allowable Fill (mm²)	Cable Area (mm²)	Included Cable No.	Conductor Type
4322	E-25, E-24	103	RGS conduit	0.00	3324.51	0.00	Pull Rope 1	Soft-Fiber Polyester
4323	E-26, E-25	103	RGS conduit	0.00	3324.51	0.00	Pull Rope 1	Soft-Fiber Polyester
4324	E-25, E-26	103	RGS conduit	0.00	3324.51	0.00	Pull Rope 1	Soft-Fiber Polyester
4325	E-25, E-26	103	RGS conduit	0.00	3324.51	0.00	Pull Rope 1	Soft-Fiber Polyester
4328	E-28, E-26, E-27	103	RGS conduit	0.00	3324.51	0.00	Pull Rope 1	Soft-Fiber Polyester
4329	E-28, E-26, E-27	103	RGS conduit	0.00	3324.51	0.00	Pull Rope 1	Soft-Fiber Polyester
4330	E-28, E-26, E-27	103	RGS conduit	0.00	3324.51	0.00	Pull Rope 1	Soft-Fiber Polyester
4331	E-28, E-26, E-27	103	RGS conduit	0.00	3324.51	0.00	Pull Rope 1	Soft-Fiber Polyester
4332	E-28, E-26, E-27	103	RGS conduit	0.00	3324.51	0.00	Pull Rope 1	Soft-Fiber Polyester
4337	E-30	103	RGS conduit	0.00	3324.51	0.00	Pull Rope 1	Soft-Fiber Polyester
4338	E-30	103	RGS conduit	0.00	3324.51	0.00	Pull Rope 1	Soft-Fiber Polyester
4344	E-30	103	RGS conduit	0.00	3324.51	0.00	Pull Rope 1	Soft-Fiber Polyester
4345	E-21	103	RGS-PVC coated conduit	1201.71	4404.97	1201.71	1473-25	50 pair #18, shielded pairs, IS/OS shield 600 V, XLPE insul., PVC jacket
						0.00	Pull Rope 1	Soft-Fiber Polyester
4346	E-21	103	RGS-PVC coated conduit	1201.71	4404.97	0.00	Pull Rope 1	Soft-Fiber Polyester
						1201.71	1473-26	50 pair #18, shielded pairs, IS/OS shield 600 V, XLPE insul., PVC jacket
4347	E-28, E-26, E-27	103	RGS conduit	0.00	3324.51	0.00	Pull Rope 1	Soft-Fiber Polyester
4348	E-28, E-26, E-27	103	RGS conduit	0.00	3324.51	0.00	Pull Rope 1	Soft-Fiber Polyester
4349	E-28, E-26, E-27	103	RGS conduit	0.00	3324.51	0.00	Pull Rope 1	Soft-Fiber Polyester
4350	E-24, E-25	103	RGS conduit	1201.71	4404.97	0.00	Pull Rope 1	Soft-Fiber Polyester
						1201.71	1473-24	50 pair #18, shielded pairs, IS/OS shield 600 V, XLPE insul., PVC jacket
4351	E-26, E-25	103	RGS conduit	1201.71	4404.97	1201.71	1473-25	50 pair #18, shielded pairs, IS/OS shield 600 V, XLPE insul., PVC jacket
						0.00	Pull Rope 1	Soft-Fiber Polyester
4352	E-27, E-26	103	RGS conduit	1201.71	4404.97	0.00	Pull Rope 1	Soft-Fiber Polyester
						1201.71	1473-25	50 pair #18, shielded pairs, IS/OS shield 600 V, XLPE insul., PVC jacket
4353	E-28, E-27	103	RGS conduit	1201.71	4404.97	0.00	Pull Rope 1	Soft-Fiber Polyester
						1201.71	1473-26	50 pair #18, shielded pairs, IS/OS shield 600 V, XLPE insul., PVC jacket

For continuation, see next sheet.

REGISTERED PROFESSIONAL ENGINEER FADI WALIEDDINE No. 11465 Exp. 12/31/2009 ELECTRICAL STATE OF CALIFORNIA

MARK	DATE	DESCRIPTIONS	REV	CK	CCO NO.
1	8/29/08	Added cable/ckts A-1006, A-1007, A-1008	JH	EJL	Light Pipe

REVISIONS

CONTRACT CHANGE ORDER NO. 70
SHEET 28 OF 36 04-0120L4 10/16/08

DETAILS
CONDUIT AND TRAY SCHEDULE

E-225

STATE OF CALIFORNIA - DEPARTMENT OF TRANSPORTATION
Caltrans

DESIGN OVERSIGHT: BEHZAD GOLEMOHAMMADI

CALCULATED/DESIGNED BY: FK DATE 2/06 REVISED BY
CHECKED BY: AB 2/06 DATE REVISED

LAST REVISION 00-00-00 DATE PLOTTED => 8/28/2008 TIME PLOTTED => 11:57:16 AM

FOR REDUCED PLANS ORIGINAL 0 20 40 60 80

DGN FILE =>f:\13103\ms\pse\otd-contract 1\cco\electrical\cco-light pipe\40120lua225r1.dgn

DIST	COUNTY	ROUTE	KILOMETER POST TOTAL PROJECT	SHEET No	TOTAL SHEETS
04	Ala	80	1.6/2.7	579 R1	643

REGISTERED ELECTRICAL ENGINEER 05/15/06 DATE

1-29-07
PLANS APPROVAL DATE

PB POWER, Inc.
A Parsons Brinckerhoff Company
303 Second St., Suite 700N
San Francisco, CA 94107-1317

The State of California or its officers or agents shall not be responsible for the accuracy or completeness of electronic copies of this plan sheet.

To get to the Caltrans web site, go to: http://www.dot.ca.gov

REGISTERED PROFESSIONAL ENGINEER FADI WALIEDDINE No. 11465 Exp. 12/31/2009 ELECTRICAL STATE OF CALIFORNIA

REGISTERED PROFESSIONAL ENGINEER JENS ERLINGSSON No. 8249 Exp. 9/30/08 ELECTRICAL STATE OF CALIFORNIA

CONDUIT DATA

ROADWAY AND GIRDER LEVEL WESTBOUND

Conduit No	Reference	Size	Type	Total Fill (mm²)	Allowable Fill (mm²)	Cable Area (mm²)	Included Cable No.	Conductor Type
4354	E-30	103	RGS conduit	1201.71	4404.97	0.00	Pull Rope 1	Soft-Fiber Polyester
						1201.71	1474-26	50 pair #18, shielded pairs, IS/OS shield 600 V, XLPE insul., PVC jacket
4355	E-20	103	RGS-PVC coated conduit	2403.42	2576.49	1201.71	1474-24	50 pair #18, shielded pairs, IS/OS shield 600 V, XLPE insul., PVC jacket
						0.00	Pull Rope 1	Soft-Fiber Polyester
						1201.71	1474-25	50 pair #18, shielded pairs, IS/OS shield 600 V, XLPE insul., PVC jacket
4356	E-21	103	RGS-PVC coated conduit	2403.42	2576.49	0.00	Pull Rope 1	Soft-Fiber Polyester
						1201.71	1474-26	50 pair #18, shielded pairs, IS/OS shield 600 V, XLPE insul., PVC jacket
						1201.71	1474-25	50 pair #18, shielded pairs, IS/OS shield 600 V, XLPE insul., PVC jacket
4357	E-20	103	RGS-PVC coated conduit	1201.71	4404.97	1201.71	1473-24	50 pair #18, shielded pairs, IS/OS shield 600 V, XLPE insul., PVC jacket
						0.00	Pull Rope 1	Soft-Fiber Polyester
4358	E-20	103	RGS-PVC coated conduit	1201.71	4404.97	1201.71	1473-25	50 pair #18, shielded pairs, IS/OS shield 600 V, XLPE insul., PVC jacket
						0.00	Pull Rope 1	Soft-Fiber Polyester
4359	E-25	103	RGS conduit	1201.71	4404.97	1201.71	1474-24	50 pair #18, shielded pairs, IS/OS shield 600 V, XLPE insul., PVC jacket
						0.00	Pull Rope 1	Soft-Fiber Polyester
4360	E-25, E-24	103	RGS conduit	1201.71	4404.97	0.00	Pull Rope 1	Soft-Fiber Polyester
						1201.71	1474-24	50 pair #18, shielded pairs, IS/OS shield 600 V, XLPE insul., PVC jacket
4361	E-26, E-25	103	RGS conduit	1201.71	4404.97	1201.71	1474-25	50 pair #18, shielded pairs, IS/OS shield 600 V, XLPE insul., PVC jacket
						0.00	Pull Rope 1	Soft-Fiber Polyester
4362	E-27, E-26	103	RGS conduit	1201.71	4404.97	1201.71	1474-25	50 pair #18, shielded pairs, IS/OS shield 600 V, XLPE insul., PVC jacket
						0.00	Pull Rope 1	Soft-Fiber Polyester
4363	E-28, E-27	103	RGS conduit	1201.71	4404.97	1201.71	1474-26	50 pair #18, shielded pairs, IS/OS shield 600 V, XLPE insul., PVC jacket
						0.00	Pull Rope 1	Soft-Fiber Polyester
4364	E-30	103	RGS conduit	0.00	3324.51	0.00	Pull Rope 1	Soft-Fiber Polyester
4365	E-25	103	RGS conduit	1201.71	4404.97	1201.71	1473-24	50 pair #18, shielded pairs, IS/OS shield 600 V, XLPE insul., PVC jacket
						0.00	Pull Rope 1	Soft-Fiber Polyester
4370	E-25, E-24	103	RGS conduit	0.00	3324.51	0.00	Pull Rope 1	Soft-Fiber Polyester
4371	E-25, E-26	103	RGS conduit	0.00	3324.51	0.00	Pull Rope 1	Soft-Fiber Polyester
4372	E-28, E-26, E-27	103	RGS conduit	0.00	3324.51	0.00	Pull Rope 1	Soft-Fiber Polyester
4373	E-27, E-28	103	RGS conduit	0.00	3324.51	0.00	Pull Rope 1	Soft-Fiber Polyester
4374	E-30	103	RGS conduit	0.00	3324.51	0.00	Pull Rope 1	Soft-Fiber Polyester
4375	E-30	103	RGS conduit	0.00	3324.51	0.00	Pull Rope 1	Soft-Fiber Polyester
4376	E-21	103	RGS-PVC coated conduit	0.00	3324.51	0.00	Pull Rope 1	Soft-Fiber Polyester
4377	E-21	103	RGS-PVC coated conduit	0.00	3324.51	0.00	Pull Rope 1	Soft-Fiber Polyester
4379	E-25	103	RGS conduit	0.00	3324.51	0.00	Pull Rope 1	Soft-Fiber Polyester
4380	E-25, E-24	103	RGS conduit	0.00	3324.51	0.00	Pull Rope 1	Soft-Fiber Polyester
4381	E-26, E-25	103	RGS conduit	0.00	3324.51	0.00	Pull Rope 1	Soft-Fiber Polyester
4382	E-27, E-26	103	RGS conduit	0.00	3324.51	0.00	Pull Rope 1	Soft-Fiber Polyester
4383	E-28, E-27	103	RGS conduit	0.00	3324.51	0.00	Pull Rope 1	Soft-Fiber Polyester
4384	E-20	103	RGS-PVC coated conduit	0.00	3324.51	0.00	Pull Rope 1	Soft-Fiber Polyester
4385	E-21, E-22	78	RGS-PVC coated conduit	0.00	1935.24	0.00	Pull Rope 1	Soft-Fiber Polyester
4386	E-21	53	RGS-PVC coated conduit	0.00	879.42	0.00	Pull Rope 1	Soft-Fiber Polyester
4387	E-20	53	RGS-PVC coated conduit	0.00	879.42	0.00	Pull Rope 1	Soft-Fiber Polyester
4388	E-20, E-22	78	RGS-PVC coated conduit	0.00	1935.24	0.00	Pull Rope 1	Soft-Fiber Polyester
4389	E-20	103	RGS-PVC coated conduit	0.00	3324.51	0.00	Pull Rope 1	Soft-Fiber Polyester
4390	E-25, E-24	103	RGS conduit	0.00	3324.51	0.00	Pull Rope 1	Soft-Fiber Polyester

CONDUIT DATA

ROADWAY AND GIRDER LEVEL WESTBOUND

Conduit No	Reference	Size	Type	Total Fill (mm²)	Allowable Fill (mm²)	Cable Area (mm²)	Included Cable No.	Conductor Type
4391	E-26, E-25	103	RGS conduit	0.00	3324.51	0.00	Pull Rope 1	Soft-Fiber Polyester
4392	E-27, E-26	103	RGS conduit	0.00	3324.51	0.00	Pull Rope 1	Soft-Fiber Polyester
4393	E-28, E-27	103	RGS conduit	0.00	3324.51	0.00	Pull Rope 1	Soft-Fiber Polyester
4394	E-25, E-24	103	RGS conduit	0.00	3324.51	0.00	Pull Rope 1	Soft-Fiber Polyester
4395	E-28, E-26, E-27	103	RGS conduit	0.00	3324.51	0.00	Pull Rope 1	Soft-Fiber Polyester
4396	E-26, E-25	103	RGS conduit	0.00	3324.51	0.00	Pull Rope 1	Soft-Fiber Polyester
4397	E30	103	RGS conduit	0.00	3324.51	0.00	Pull Rope 1	Soft-Fiber Polyester
4398	E-30	103	RGS conduit	1201.71	4404.97	0.00	Pull Rope 1	Soft-Fiber Polyester
						1201.71	1473-26	50 pair #18, shielded pairs, IS/OS shield 600 V, XLPE insul., PVC jacket
4399	E30	103	RGS conduit	0.00	3324.51	0.00	Pull Rope 1	Soft-Fiber Polyester
4400	E-25	103	RGS conduit	0.00	3324.51	0.00	Pull Rope 1	Soft-Fiber Polyester
4401	E-14, E-25	41	RGS conduit	311.89	534.55	0.00	Pull Rope 1	Soft-Fiber Polyester
						49.21	UP171-2A	2+1gnd #12, #12, 600 V, RHH/RHW insulation
						262.68	A-1006	1-3/C + gnd #8, 600 V EPR insulation
4402	E-14, E-25	41	RGS conduit	311.89	708.28	0.00	Pull Rope 1	Soft-Fiber Polyester
						262.68	A-1007	1-3/C + gnd #8, 600 V EPR insulation
4403	E-25	41	RGS conduit	324.29	708.28	324.29	A-1005	1-3/C+gnd #6, 600 V, EPR insulation
						0.00	Pull Rope 1	Soft-Fiber Polyester
4404	E-25	41	RGS conduit	324.29	708.28	324.29	S-1601	1-3/C+gnd #6, 600 V, EPR insulation
						0.00	Pull Rope 1	Soft-Fiber Polyester
4408	E-14, E-26	41	RGS conduit	175.89	534.55	175.89	A-1005-2	3-1/C #6, 600 V, RHH/RHW insulation
						0.00	Pull Rope 1	Soft-Fiber Polyester
4409	E-14, E-26	41	RGS conduit	49.21	534.55	49.21	UP172-2B	2+1gnd #12, #12, 600 V, RHH/RHW insulation
						0.00	Pull Rope 1	Soft-Fiber Polyester
4410	E-14, E-26	41	RGS conduit	98.10	708.28	0.00	Pull Rope 1	Soft-Fiber Polyester
						98.10	1804	1 - 2 pair, shielded #18 with IS/OA , 600 V, PVC
4411	E-26, E-25	103	RGS conduit	324.29	4404.97	324.29	S-1601	1-3/C+gnd #6, 600 V, EPR insulation
						0.00	Pull Rope 1	Soft-Fiber Polyester
4412	E-26, E-25	103	RGS conduit	366.10	4404.97	0.00	Pull Rope 1	Soft-Fiber Polyester
						366.10	1626	1-3/C+gnd #4, 600 V, EPR insulation
4413	E-26, E-25	103	RGS conduit	324.29	4404.97	0.00	Pull Rope 1	Soft-Fiber Polyester
						324.29	A-1005	1-3/C+gnd #6, 600 V, EPR insulation
4416	E-27	103	RGS conduit	0.00	3324.51	0.00	Pull Rope 1	Soft-Fiber Polyester
4417	E-27	103	RGS conduit	0.00	3324.51	0.00	Pull Rope 1	Soft-Fiber Polyester
4418	E-26, E25	103	RGS conduit	525.36	2576.49	0.00	Pull Rope 1	Soft-Fiber Polyester
						262.68	A-1006	1-3/C + gnd #8, 600 V EPR insulation
						262.68	A-1007	1-3/C + gnd #8, 600 V EPR insulation
4419	E-26, E25, E-27	103	RGS conduit	0.00	3324.51	0.00	Pull Rope 1	Soft-Fiber Polyester

For continuation, see next sheet.

MARK	DATE	DESCRIPTIONS	REV	CK	CCO NO.
1	8/29/08	Added cable/ckts A-1006, A-1007	JH	EJL	Light Pipe

REVISIONS

CONTRACT CHANGE ORDER NO. 70
SHEET 29 OF 36 04-0120L4
10/16/08

DETAILS
CONDUIT AND TRAY SCHEDULE

E-226

STATE OF CALIFORNIA - DEPARTMENT OF TRANSPORTATION
Caltrans

DESIGN OVERSIGHT: BEHZAD GOLEMOHAMMADI

CALCULATED/DESIGNED BY: FK — DATE 2/06
CHECKED BY: AB — DATE 2/06
REVISED BY — DATE REVISED

DATE PLOTTED => 8/28/2008
TIME PLOTTED => 11:57:18 AM
LAST REVISION 00-00-00

DGN FILE =>t:\13103\ms\pse\otd-contract 1\cco\electrical\cco-light pipe\40120luc226r1.dgn

MARK	DATE	DESCRIPTIONS	REV	CK	CCO NO.
2	8/29/08	Added cable/ckts A-1006, A-1007, A-1008.	JH		LIGHT PIPE
1	4/30/08	Revised cable number routed inside conduit #4801 and #4831	ECR	EJL	65

REVISIONS

CONTRACT CHANGE ORDER NO. 76
SHEET 30 OF 36
04-0120L4
10/16/08

Caltrans Metric

DIST	COUNTY	ROUTE	KILOMETER POST TOTAL PROJECT	SHEET NO	TOTAL SHEETS
04	Ala	80	1.6/2.7	580 R2	643

REGISTERED ELECTRICAL ENGINEER 05/15/06 DATE

1-29-07
PLANS APPROVAL DATE

REGISTERED PROFESSIONAL ENGINEER JENS ERLINGSSON No. 8249 Exp. 9/30/08 ELECTRICAL STATE OF CALIFORNIA

PB POWER, Inc.
A Parsons Brinckerhoff Company
303 Second St., Suite 700N
San Francisco, CA 94107-1317

The State of California or its officers or agents shall not be responsible for the accuracy or completeness of electronic copies of this plan sheet.

To get to the Caltrans web site, go to http://www.dot.ca.gov

REGISTERED PROFESSIONAL ENGINEER FADI WALIEDDINE No. 11465 Exp. 12/31/2009 ELECTRICAL STATE OF CALIFORNIA

CONDUIT DATA

ROADWAY AND GIRDER LEVEL WESTBOUND

Conduit No	Reference	Size	Type	Total Fill (mm²)	Allowable Fill (mm²)	Cable Area (mm²)	Included Cable No.	Conductor Type
4422	E-27	41	RGS conduit	324.29	708.28	324.29	S-1602	1-3/C+gnd #6, 600 V EPR insulation
						0.00	Pull Rope 1	Soft-Fiber Polyester
4423	E-27	41	RGS conduit	49.21	534.55	49.21	UP172-2A	2+1gnd #12,#12, 600 V, RHH/RHW insulation
						0.00	Pull Rope 1	Soft-Fiber Polyester
4424	E-15,-E-27	41	RGS conduit	0.00	534.55	0.00	Pull Rope 1	Soft-Fiber Polyester
4425	E-15, E-27	41	RGS conduit	0.00	534.55	0.00	Pull Rope 1	Soft-Fiber Polyester
4430	E-15, E-28, E-30	41	RGS conduit 2	324.29	708.28	0.00	Pull Rope 1	Soft-Fiber Polyester
						324.29	A-1008	1-3/C+gnd #6, 600 V EPR insulation
4431	E-15, E-28, E-30	41	RGS conduit	0.00	534.55	0.00	Pull Rope 1	Soft-Fiber Polyester
4432	E-14, E-26	41	RGS conduit	0.00	534.55	0.00	Pull Rope 1	Soft-Fiber Polyester
4433	E-14, E-26	41	RGS conduit	0.00	534.55	0.00	Pull Rope 1	Soft-Fiber Polyester
4434	E-14, E-26	41	RGS conduit	98.10	708.28	98.10	1803	1 - 2 pair, shielded #18 with IS/OA , 600 V, PVC
						0.00	Pull Rope 1	Soft-Fiber Polyester
4435	E-15, E-28, E-30	41	RGS conduit	98.10	708.28	98.10	1803	1 - 2 pair, shielded #18 with IS/OA , 600 V, PVC
						0.00	Pull Rope 1	Soft-Fiber Polyester
4436	E-15, E-28, E-30	41	RGS conduit	98.10	708.28	0.00	Pull Rope 1	Soft-Fiber Polyester
						98.10	1804	1 - 2 pair, shielded #18 with IS/OA , 600 V, PVC
4450	E-27, E-28, E-30	103	RGS conduit 2	525.36	2576.49	0.00	Pull Rope 1	Soft-Fiber Polyester
						262.68	A-1006	1-3/C+gnd #8, 600 V EPR insulation
						262.68	A-1007	1-3/C+gnd #8, 600 V EPR insulation
4451	E-27, E-28, E-30	103	RGS conduit	912.87	5324.51	324.29	S-1601	1-3/C+gnd #6, 600 V EPR insulation
						324.29	S-1602	1-3/C+gnd #6, 600 V EPR insulation
						0.00	Pull Rope 1	Soft-Fiber Polyester
						324.29	A-1005	1-3/C+gnd #6, 600 V EPR insulation
4452	E-27, E-28, E-30	103	RGS conduit	732.20	2576.49	366.10	1626	1-3/C+gnd #4, 600 V EPR insulation
						366.10	1627	1-3/C+gnd #4, 600 V EPR insulation
						0.00	Pull Rope 1	Soft-Fiber Polyester
4801	E-20	78	RGS-PVC coated conduit	624.31 1	1935.24	624.31	1626-2	1-4/C+gnd #2, 600 V EPR insulation 1
						0.00	Pull Rope 1	Soft-Fiber Polyester
4802	E-20	78	RGS-PVC coated conduit	0.00	1935.24	0.00	Pull Rope 1	Soft-Fiber Polyester
4803	E-20	78	RGS-PVC coated conduit	98.42	1935.24	0.00	Pull Rope 1	Soft-Fiber Polyester
						49.21	UP171-2A	2+1gnd #12,#12, 600 V, RHH/RHW insulation
						49.21	UP171-5	3-1/C #12, 600 V, RHH/RHW insulation
4804	E-20	53	RGS-PVC coated conduit	0.00	879.42	0.00	Pull Rope 1	Soft-Fiber Polyester
4805	E-20	103	RGS-PVC coated conduit	0.00	3324.51	0.00	Pull Rope 1	Soft-Fiber Polyester
4811	E-20	78	RGS-PVC coated conduit	366.10	2564.19	366.10	1626	1-3/C+gnd #4, 600 V EPR insulation
						0.00	Pull Rope 1	Soft-Fiber Polyester
4812	E-20	78	RGS-PVC coated conduit	49.21	1935.24	49.21	UP171-2A	2+1gnd #12,#12, 600 V, RHH/RHW insulation
						0.00	Pull Rope 1	Soft-Fiber Polyester
4813	E-20	78	RGS-PVC coated conduit	0.00	1935.24	0.00	Pull Rope 1	Soft-Fiber Polyester
4814	E-20	78	RGS-PVC coated conduit	0.00	1935.24	0.00	Pull Rope 1	Soft-Fiber Polyester
4831	E-21	78	RGS-PVC coated conduit	624.31 1	1935.24	0.00	Pull Rope 1	Soft-Fiber Polyester
						624.31	1627-2	1-4/C+gnd #2, 600 V EPR insulation 1
4832	E-21	78	RGS-PVC coated conduit	0.00	1935.24	0.00	Pull Rope 1	Soft-Fiber Polyester
4833	E-21	78	RGS-PVC coated conduit	98.42	1935.24	0.00	Pull Rope 1	Soft-Fiber Polyester
						49.21	UP172-2A	2+1gnd #12,#12, 600 V, RHH/RHW insulation
						49.21	UP172-5	3-1/C #12, 600 V, RHH/RHW insulation
4837	E-21	78	RGS-PVC coated conduit	0.00	1935.24	0.00	Pull Rope 1	Soft-Fiber Polyester
4841	E-21	78	RGS-PVC coated conduit	415.31	1935.24	0.00	Pull Rope 1	Soft-Fiber Polyester
						49.21	UP172-2A	2+1gnd #12,#12, 600 V, RHH/RHW insulation
						366.10	1627	1-3/C+gnd #4, 600 V EPR insulation
4842	E-21	78	RGS-PVC coated conduit	0.00	1935.24	0.00	Pull Rope 1	Soft-Fiber Polyester
4843	E-21	78	RGS-PVC coated conduit	0.00	1935.24	0.00	Pull Rope 1	Soft-Fiber Polyester
4844	E-21	78	RGS-PVC coated conduit	0.00	1935.24	0.00	Pull Rope 1	Soft-Fiber Polyester
4845	E-15, E-27, E-28, E-21	78	RGS-PVC coated conduit	0.00	1935.24	0.00	Pull Rope 1	Soft-Fiber Polyester

CONDUIT DATA

ROADWAY AND GIRDER LEVEL WESTBOUND

Conduit No	Reference	Size	Type	Total Fill (mm²)	Allowable Fill (mm²)	Cable Area (mm²)	Included Cable No.	Conductor Type
6300	E-24	103	RGS conduit	253.35	3324.51	253.35	Pull Rope 1	Soft-Fiber Polyester, 500 kcmil ground
6301	E-24	103	RGS conduit	0.00	3324.51	0.00	Pull Rope 1	Soft-Fiber Polyester
6302	E-24	103	RGS conduit	0.00	3324.51	0.00	Pull Rope 1	Soft-Fiber Polyester
6303	E-24	103	RGS conduit	0.00	3324.51	0.00	Pull Rope 1	Soft-Fiber Polyester
6304	E-24	103	RGS conduit	0.00	3324.51	0.00	Pull Rope 1	Soft-Fiber Polyester
6705	E-24	103	RGS conduit	1201.71	4404.97	1201.71	1474-24	
						0.00	Pull Rope 1	Soft-Fiber Polyester
6727	E-24	103	RGS conduit	1201.71	4404.97	0.00	Pull Rope 1	Soft-Fiber Polyester
						1201.71	1473-24	50 pair #18, shielded pairs, IS/OS shield 600 V, XLPE insul., PVC jacket
6728	E-24	103	RGS conduit	0.00	3324.51	0.00	Pull Rope 1	Soft-Fiber Polyester
6729	E-24	103	RGS conduit	0.00	3324.51	0.00	Pull Rope 1	Soft-Fiber Polyester
6731	E-24	103	RGS conduit	0.00	3324.51	0.00	Pull Rope 1	Soft-Fiber Polyester
6732	E-24	103	RGS conduit	0.00	3324.51	0.00	Pull Rope 1	Soft-Fiber Polyester
6733	E-24	103	RGS conduit	0.00	3324.51	0.00	Pull Rope 1	Soft-Fiber Polyester
6734	E-24	103	RGS conduit	0.00	3324.51	0.00	Pull Rope 1	Soft-Fiber Polyester
6725			Not used					50 pair #18, shielded pairs, IS/OS shield 600 V, XLPE insul., PVC jacket
6952	E-23	103	RGS conduit	0.00	3324.51	0.00	Pull Rope 1	Soft-Fiber Polyester
6964	E-23	103	RGS conduit	1201.71	4404.97	1201.71	1474-24	50 pair #18, shielded pairs, IS/OS shield 600 V, XLPE insul., PVC jacket
						0.00	Pull Rope 1	Soft-Fiber Polyester
6965	E-23	103	RGS conduit	1201.71	4404.97	1201.71	1473-24	50 pair #18, shielded pairs, IS/OS shield 600 V, XLPE insul., PVC jacket
						0.00	Pull Rope 1	Soft-Fiber Polyester
6966	E-23	103	RGS conduit	0.00	3324.51	0.00	Pull Rope 1	Soft-Fiber Polyester
6967	E-23	103	RGS conduit	0.00	3324.51	0.00	Pull Rope 1	Soft-Fiber Polyester
6968	E-23	103	RGS conduit	0.00	3324.51	0.00	Pull Rope 1	Soft-Fiber Polyester
6969	E-23	103	RGS conduit	0.00	3324.51	0.00	Pull Rope 1	Soft-Fiber Polyester
6970	E-23	103	RGS conduit	0.00	3324.51	0.00	Pull Rope 1	Soft-Fiber Polyester
6971	E-23	103	RGS conduit	0.00	3324.51	0.00	Pull Rope 1	Soft-Fiber Polyester
6972	E-23	103	RGS conduit	0.00	3324.51	0.00	Pull Rope 1	Soft-Fiber Polyester
6730	E-24	103	RGS conduit	0.00	3324.51	0.00	Pull Rope 1	Soft-Fiber Polyester
6714	E-24	103	RGS conduit	0.00	3324.51	0.00	Pull Rope 1	Soft-Fiber Polyester

For continuation, see next sheet.

DETAILS
CONDUIT AND TRAY SCHEDULE

E-227

DATE	REVISED BY	DATE	REVISED
2/06	FK	2/06	AB

CALCULATED/DESIGNED BY FK
CHECKED BY AB
DESIGN OVERSIGHT BEHZAD GOLEMOHAMMADI

STATE OF CALIFORNIA - DEPARTMENT OF TRANSPORTATION
Caltrans

DATE PLOTTED => 8/28/2008
TIME PLOTTED => 11:57:21 AM
LAST REVISION 00-00-00

CONDUIT DATA

ROADWAY AND GIRDER LEVEL WESTBOUND

Conduit No	Reference	Size	Type	Total Fill (mm^2)	Allowable Fill (mm^2)	Cable Area (mm^2)	Included Cable No.	Conductor Type
4355A	E-20	103	RGS-PVC coated	0.00	3324.51	0.00	Pull Rope 1	Soft Fiber Polyester
4356A	E-20	103	RGS-PVC coated	0.00	3324.51	0.00	Pull Rope 1	Soft Fiber Polyester
4815	E-20	103	RGS-PVC coated	0.00	3324.51	0.00	Pull Rope 1	Soft Fiber Polyester
4820	E-20	78	RGS-PVC coated	990.41	1499.81	0.00	Pull Rope 1	Soft Fiber Polyester
						366.1	1626-1	1-3/C + gnd #4, 600 V, EPR insulation
						624.31	1626-2	1-4/C + gnd #2, 600 V, EPR insulation
4821	E-20	78	RGS-PVC coated	732.20	1499.81	0.00	Pull Rope 1	Soft Fiber Polyester
						366.1	1626	1-3/C + gnd #4, 600 V, EPR insulation
						366.1	1626-1	1-3/C + gnd #4, 600 V, EPR insulation
4826	E-21	78	RGS-PVC coated	990.41	1499.81	0.00	Pull Rope 1	Soft Fiber Polyester
						366.1	1627-1	1-3/C + gnd #4, 600 V, EPR insulation
						624.31	1627-2	1-4/C + gnd #2, 600 V, EPR insulation
4827	E-21	78	RGS-PVC coated	732.32	1499.81	0.00	Pull Rope 1	Soft Fiber Polyester
						366.1	1627	1-3/C + gnd #4, 600 V, EPR insulation
						366.1	1627-1	1-3/C + gnd #4, 600 V, EPR insulation
4846	E-20	103	RGS-PVC coated	0.00	3324.51	0.00	Pull Rope 1	Soft Fiber Polyester
Wireway 22W	E-20	203	203 mm x 203 mm wireway	1566.21	8258.05	366.10	1626	1-3/C + gnd #4, 600 V, EPR insulation
						366.10	1626-1	1-3/C + gnd #4, 600 V, EPR insulation
						624.31	1626-2	1-4/C + gnd #2, 600 V, EPR insulation
						62.07	1656-1	1-3/C #16, 600 V, EPR insulation
						49.21	UP171-10	3-1/C #12, 600 V, RHH/RHW insulation
						49.21	UP171-2A	2 + 1 gnd #12, #12, 600V, RHH/RHW insulation
						49.21	UP171-5	3-1/C #12, 600 V, RHH/RHW insulation
Wireway 23W	E-21	203	203 mm x 203 mm wireway	1566.21	8258.05	366.10	1627	1-3/C + gnd #4, 600 V, EPR insulation
						366.10	1627-1	1-3/C + gnd #4, 600 V, EPR insulation
						624.31	1627-2	1-4/C + gnd #2, 600 V, EPR insulation
						62.07	1656-2	1-3/C #16, 600 V, EPR insulation
						49.21	UP172-10	3 + 1 gnd #12, 600 V, RHH/RHW insulation
						49.21	UP172-2A	2 + 1 gnd #12, 600 V, RHH/RHW insulation
						49.21	UP172-5	3-1/C #12, 600 V, RHH/RHW insulation
1401A	E-10, E-11	41	RGS conduit	133.19	534.55	0.00	Pull Rope 1	Soft Fiber Polyester
						133.19	A-1006-1	3 + 1 gnd #8, #10, 600 V, RHH/RHW insulation
1401B	E-10, E-11	41	RGS conduit	133.19	534.55	0.00	Pull Rope 1	Soft Fiber Polyester
						133.19	A-1006-1	3 + 1 gnd #8, #10, 600 V, RHH/RHW insulation
1402A	E-11	41	RGS conduit	133.19	534.55	0.00	Pull Rope 1	Soft Fiber Polyester
						133.19	A-1007-1	3 + 1 gnd #8, #10, 600 V, RHH/RHW insulation
1411A	E-12	41	RGS conduit	212.85	534.55	0.00	Pull Rope 1	Soft Fiber Polyester
						212.85	A-1008-1	3 + 1 gnd #6, #8, 600 V, RHH/RHW insulation
1411B	E-12	41	RGS conduit	212.85	534.55	0.00	Pull Rope 1	Soft Fiber Polyester
						212.85	A-1008-1	3 + 1 gnd #6, #8, 600 V, RHH/RHW insulation
4403A	E-25	41	RGS conduit	0.00	534.55	0.00	Pull Rope 1	Soft Fiber Polyester
4404A	E-25	41	RGS conduit	0.00	534.55	0.00	Pull Rope 1	Soft Fiber Polyester

1 2

MARK	DATE	DESCRIPTIONS	REV	CK	CCO NO.
2	8/29/08	Added conduits 4403 and 4404A	JH	EJL	Light Pole Base
1	8/29/08	Added conduits 1401A,1401B,1402A, 1411A, 1411B. Added cable/ ckts. A-1006-1, A-1007-1, A-1008-1	JH	EJL	Light Pipe
0	4/30/08	New drawing. Added conduit nos. 4820, 4821, 4826, 4827, 4815, 4355A, 4846, 4356A. Added cables inside wireway 22W and 23W	ECR	EJL	65

REVISIONS

CONTRACT CHANGE ORDER NO. 70
SHEET 31 OF 36 04-012014 10/16/08

DETAILS
CONDUIT AND TRAY SCHEDULE

0

E-228A

Caltrans Metric

DIST	COUNTY	ROUTE	KILOMETER POST TOTAL PROJECT	SHEET NO	TOTAL SHEETS
04	Ala	80	1.6/2.7	581A R1	643

REGISTERED ELECTRICAL ENGINEER 4/30/08 DATE

PLANS APPROVAL DATE

REGISTERED PROFESSIONAL ENGINEER FADI WALIEDDINE NO. 11465 EXP. 12/31/2009 ELECTRICAL STATE OF CALIFORNIA

PB POWER, inc.
A Parsons Brinckerhoff Company
303 Second St., Suite 700N
San Francisco, CA 94107-1317

The State of California or its officers or agents shall not be responsible for the accuracy or completeness of electronic copies of this plan sheet.

To get to the Caltrans web site, go to http://www.dot.ca.gov

STATE OF CALIFORNIA - DEPARTMENT OF TRANSPORTATION
Caltrans

DESIGN OVERSIGHT
BEHZAD GOLEMOHAMMADI

CALCULATED/DESIGNED BY
CHECKED BY
REVISED BY ECR DATE 4/08
DATE REVISED EJL 5/08

LAST REVISION 00-00-00
DATE PLOTTED => 8/28/2008
TIME PLOTTED => 11:57:23 AM

DIST	COUNTY	ROUTE	KILOMETER POST TOTAL PROJECT	SHEET NO	TOTAL SHEETS
04	Ala	80	1.6/2.7	586 R1	643

REGISTERED ELECTRICAL ENGINEER 05/15/08 DATE

1-29-07
PLANS APPROVAL DATE

PB POWER, Inc.
A Parsons Brinckerhoff Company
303 Second St., Suite 700N
San Francisco, CA 94107-1317

REGISTERED PROFESSIONAL ENGINEER JENS ERLINGSSON No. 8249 Exp. 9/30/08 ELECTRICAL STATE OF CALIFORNIA

The State of California or its officers or agents shall not be responsible for the accuracy or completeness of electronic copies of this plan sheet.

To get to the Caltrans web site, go to http://www.dot.ca.gov

REGISTERED PROFESSIONAL ENGINEER FADI WALIEDDINE No. 11465 Exp. 12/31/2009 ELECTRICAL STATE OF CALIFORNIA

CONDUIT DATA

UNDERGROUND AND ROADWAY AT-GRADE

Conduit No	Reference	Size	Type	Total Fill (mm²)	Allowable Fill (mm²)	Cable Area (mm²)	Included Cable No.	Conductor Type
0317	E-101, E-102, E-112, E-114	103	RGS conduit	1201.71	4404.97	0.00	Pull Rope 1	Soft-Fiber Polyester
						1201.71	1474-26	50 pair #18, shielded pairs, IS/OS shield 600 V, XLPE insul., PVC jacket
0318	E-101, E-102, E-112, E-114	103	RGS conduit	1201.71	4404.97	1201.71	2474-27	50 pair #18, shielded pairs, IS/OS shield 600 V, XLPE insul., PVC jacket
						0.00	Pull Rope 1	Soft-Fiber Polyester
0320	E-102, E-109, E-114, E-116	103	RGS conduit	0.00	3324.51	0.00	Pull Rope 1	Soft-Fiber Polyester
0321	E-102, E-109, E-114, E-116	103	RGS conduit	0.00	3324.51	0.00	Pull Rope 1	Soft-Fiber Polyester
0322	E-102, E-109, E-114, E-116	103	RGS conduit	0.00	3324.51	0.00	Pull Rope 1	Soft-Fiber Polyester
0323	E-102, E-109, E-114, E-116	103	RGS conduit	0.00	3324.51	0.00	Pull Rope 1	Soft-Fiber Polyester
0324	E-102, E-109, E-114, E-116	103	RGS conduit	0.00	3324.51	0.00	Pull Rope 1	Soft-Fiber Polyester
0325	E-102, E-109, E-114, E-116	103	RGS conduit	0.00	3324.51	0.00	Pull Rope 1	Soft-Fiber Polyester
0326	E-102, E-109, E-114, E-116	103	RGS conduit	0.00	3324.51	0.00	Pull Rope 1	Soft-Fiber Polyester
0327	E-102, E-109, E-114, E-116	103	RGS conduit	0.00	3324.51	0.00	Pull Rope 1	Soft-Fiber Polyester
0328	E-102, E-109, E-114, E-116	103	RGS conduit	196.20	2576.49	0.00	Pull Rope 1	Soft-Fiber Polyester
						98.10	1803	1 - 2 pair, shielded #18 with IS/OA, 600 V, PVC
						98.10	1804	1 - 2 pair, shielded #18 with IS/OA, 600 V, PVC
0329	E-102, E-109, E-114, E-116	103	RGS conduit	0.00	3324.51	0.00	Pull Rope 1	Soft-Fiber Polyester
0330	E-102, E-109, E-114, E-116	103	RGS conduit	1201.71	4404.97	0.00	Pull Rope 1	Soft-Fiber Polyester
						1201.71	1474-26	50 pair #18, shielded pairs, IS/OS shield 600 V, XLPE insul., PVC jacket
0331	E-102, E-109, E-114, E-116	103	RGS conduit	1201.71	4404.97	1201.71	1473-26	50 pair #18, shielded pairs, IS/OS shield 600 V, XLPE insul., PVC jacket
						0.00	Pull Rope 1	Soft-Fiber Polyester
0335	E-99, E-103, E-116	103	RGS conduit	1201.71	4404.97	1201.71	1474-26	50 pair #18, shielded pairs, IS/OS shield 600 V, XLPE insul., PVC jacket
						0.00	Pull Rope 1	Soft-Fiber Polyester
0336	E-99, E-103, E-116	103	RGS conduit	0.00	3324.51	0.00	Pull Rope 1	Soft-Fiber Polyester
0337	E-99, E-103, E-116	103	RGS conduit	0.00	3324.51	0.00	Pull Rope 1	Soft-Fiber Polyester
0338	E-99, E-103, E-116	103	RGS conduit	0.00	3324.51	0.00	Pull Rope 1	Soft-Fiber Polyester
0339	E-99, E-103, E-116	103	RGS conduit	196.20	2576.49	0.00	Pull Rope 1	Soft-Fiber Polyester
						98.10	1803	1 - 2 pair, shielded #18 with IS/OA, 600 V, PVC
						98.10	1804	1 - 2 pair, shielded #18 with IS/OA, 600 V, PVC
0340	E-99, E-103, E-116	103	RGS conduit	1201.71	4404.97	1201.71	1473-26	50 pair #18, shielded pairs, IS/OS shield 600 V, XLPE insul., PVC jacket
						0.00	Pull Rope 1	Soft-Fiber Polyester
0346	E-98, E-103, E-116	103	RGS conduit	0.00	3324.51	0.00	Pull Rope 1	Soft-Fiber Polyester
0347	E-98, E-103, E-116	103	RGS conduit	0.00	3324.51	0.00	Pull Rope 1	Soft-Fiber Polyester
0348	E-98, E-103, E-116	103	RGS conduit	0.00	3324.51	0.00	Pull Rope 1	Soft-Fiber Polyester
0349	E-98, E-103, E-116	103	RGS conduit	0.00	3324.51	0.00	Pull Rope 1	Soft-Fiber Polyester
0350	E-98, E-103, E-116	103	RGS conduit	0.00	3324.51	0.00	Pull Rope 1	Soft-Fiber Polyester
0351	E-98, E-103, E-116	103	RGS conduit	0.00	3324.51	0.00	Pull Rope 1	Soft-Fiber Polyester
0355	E-103, E-116	103	RGS conduit	0.00	3324.51	0.00	Pull Rope 1	Soft-Fiber Polyester
0356	E-103, E-116	103	RGS conduit	0.00	3324.51	0.00	Pull Rope 1	Soft-Fiber Polyester
0357	E-103, E-116	103	RGS conduit	0.00	3324.51	0.00	Pull Rope 1	Soft-Fiber Polyester
0358	E-103, E-116	103	RGS conduit	0.00	3324.51	0.00	Pull Rope 1	Soft-Fiber Polyester

CONDUIT DATA

UNDERGROUND AND ROADWAY AT-GRADE

Conduit No	Reference	Size	Type	Total Fill (mm²)	Allowable Fill (mm²)	Cable Area (mm²)	Included Cable No.	Conductor Type
0368	E-94	41	RGS conduit	0.00	534.55	0.00	Pull Rope 1	Soft-Fiber Polyester
0374	E-94	41	RGS conduit	0.00	534.55	0.00	Pull Rope 1	Soft-Fiber Polyester
0412	E-101, E-111	103	RGS conduit	0.00	3324.51	0.00	Pull Rope 1	Soft-Fiber Polyester
0415	E-101, E-102, E-111, E-113	103	RGS conduit	732.20	2576.49	366.10	1626	1-3/C+gnd #4, 600 V, EPR insulation
						366.10	1627	1-3/C+gnd #4, 600 V, EPR insulation
						0.00	Pull Rope 1	Soft-Fiber Polyester
0416	E-101, E-102, E-111, E-113	103	RGS conduit	849.65	3324.51	0.00	Pull Rope 1	Soft-Fiber Polyester
						262.68	A-1006	1-3/C + gnd #8, 600 V, EPR insulation
						262.68	A-1007	1-3/C + gnd #8, 600 V, EPR insulation
						324.29	A-1008	1-3/C + gnd #6, 600 V, EPR insulation
0417	E-101, E-102, E-111, E-113	103	RGS conduit	0.00	3324.51	0.00	Pull Rope 1	Soft-Fiber Polyester
0418	E-101, E-102, E-111, E-113	103	RGS conduit	0.00	3324.51	0.00	Pull Rope 1	Soft-Fiber Polyester
0419	E-101, E-102, E-111, E-113	103	RGS conduit	0.00	3324.51	0.00	Pull Rope 1	Soft-Fiber Polyester
0420	E-101, E-102, E-111, E-113	103	RGS conduit	0.00	3324.51	0.00	Pull Rope 1	Soft-Fiber Polyester
0421	E-101, E-102, E-111, E-113	103	RGS conduit	0.00	3324.51	0.00	Pull Rope 1	Soft-Fiber Polyester
0422	E-101, E-102, E-111, E-113	103	RGS conduit	0.00	3324.51	0.00	Pull Rope 1	Soft-Fiber Polyester
0423	E-101, E-102, E-111, E-113	103	RGS conduit	0.00	3324.51	0.00	Pull Rope 1	Soft-Fiber Polyester
0424	E-101, E-102, E-111, E-113	103	RGS conduit	972.87	3324.51	324.29	A-1005	1-3/C+gnd #6, 600 V, EPR insulation
						0.00	Pull Rope 1	Soft-Fiber Polyester
						324.29	S-1602	1-3/C+gnd #6, 600 V, EPR insulation
						324.29	S-1601	1-3/C+gnd #6, 600 V, EPR insulation
0425	E-101, E-102, E-111, E-113	103	RGS conduit	0.00	3324.51	0.00	Pull Rope 1	Soft-Fiber Polyester
0426	E-101, E-102, E-111, E-113	103	RGS conduit	0.00	3324.51	0.00	Pull Rope 1	Soft-Fiber Polyester
0430	E-102, E-109, E-113, E-115	103	RGS conduit	732.20	2576.49	366.10	1626	1-3/C+gnd #4, 600 V, EPR insulation
						366.10	1627	1-3/C+gnd #4, 600 V, EPR insulation
						0.00	Pull Rope 1	Soft-Fiber Polyester
0431	E-102, E-109, E-113, E-115	103	RGS conduit	849.65	3324.51	0.00	Pull Rope 1	Soft-Fiber Polyester
						262.68	A-1006	1-3/C + gnd #8, 600 V, EPR insulation
						262.68	A-1007	1-3/C + gnd #8, 600 V, EPR insulation
						324.29	A-1008	1-3/C + gnd #6, 600 V, EPR insulation

For continuation, see next sheet.

MARK	DATE	DESCRIPTIONS	REV	CK	CCO NO.
1	8/29/08	Added cable/ckts A-1006, A-1007, A-1008.	JH	EJL	Light Pipe

REVISIONS

CONTRACT CHANGE ORDER NO. 70
SHEET 32 OF 36 04-0120L4 10/16/08

DETAILS
CONDUIT AND TRAY SCHEDULE

E-233

STATE OF CALIFORNIA - DEPARTMENT OF TRANSPORTATION
Caltrans

DESIGN OVERSIGHT: BEHZAD GOLEMOHAMMADI

CALCULATED/DESIGNED BY: FK DATE 2/06 REVISED BY
CHECKED BY: AB 2/06 DATE REVISED

LAST REVISION 00-00-00 DATE PLOTTED => 8/28/2008 TIME PLOTTED => 11:57:26 AM

FOR REDUCED PLANS ORIGINAL 0 20 40 60 80

DGN FILE =>f:\13103\ms\pse\otd-contract 1\cco\electrical\cco-light pipe\401201ua233r1.dgn

DIST	COUNTY	ROUTE	KILOMETER POST TOTAL PROJECT	SHEET NO	TOTAL SHEETS
04	Ala	80	1.6/2.7	587 R1	643

REGISTERED ELECTRICAL ENGINEER 05/15/06 DATE

1-29-07
PLANS APPROVAL DATE

PB POWER, Inc.
A Parsons Brinckerhoff Company
303 Second St., Suite 700N
San Francisco, CA 94107-1317

REGISTERED PROFESSIONAL ENGINEER JENS ERLINGSSON No. 8249 Exp. 9/30/08 ELECTRICAL STATE OF CALIFORNIA

REGISTERED PROFESSIONAL ENGINEER FADI WALIEDDINE No. 11465 Exp. 12/31/2009 ELECTRICAL STATE OF CALIFORNIA

1

Caltrans Metric

The State of California or its officers or agents shall not be responsible for the accuracy or completeness of electronic copies of this plan sheet.

To get to the Caltrans web site, go to: http://www.dot.ca.gov

CONDUIT DATA

UNDERGROUND AND ROADWAY AT-GRADE

Conduit No.	Reference	Size	Type	Total Fill (mm²)	Allowable Fill (mm²)	Cable Area (mm²)	Included Cable No.	Conductor Type
0432	E-102, E-109, E-113, E-115	103	RGS conduit	0.00	3324.51	0.00	Pull Rope 1	Soft-Fiber Polyester
0433	E-102, E-109, E-113, E-115	103	RGS conduit	0.00	3324.51	0.00	Pull Rope 1	Soft-Fiber Polyester
0434	E-102, E-109, E-113, E-115	103	RGS conduit	0.00	3324.51	0.00	Pull Rope 1	Soft-Fiber Polyester
0435	E-102, E-109, E-113, E-115	103	RGS conduit	0.00	3324.51	0.00	Pull Rope 1	Soft-Fiber Polyester
0436	E-102, E-109, E-113, E-115	103	RGS conduit	0.00	3324.51	0.00	Pull Rope 1	Soft-Fiber Polyester
0437	E-102, E-109, E-113, E-115	103	RGS conduit	0.00	3324.51	0.00	Pull Rope 1	Soft-Fiber Polyester
0438	E-102, E-109, E-113, E-115	103	RGS conduit	0.00	3324.51	0.00	Pull Rope 1	Soft-Fiber Polyester
0439	E-102, E-109, E-113, E-115	103	RGS conduit	0.00	3324.51	0.00	Pull Rope 1	Soft-Fiber Polyester
0440	E-102, E-109, E-113, E-115	103	RGS conduit	0.00	3324.51	0.00	Pull Rope 1	Soft-Fiber Polyester
0441	E-102, E-109, E-113, E-115	103	RGS conduit	972.87	3324.51	0.00	Pull Rope 1	Soft-Fiber Polyester
						324.29	S-1601	1-3/C+gnd #6, 600 V, EPR insulation
						324.29	S-1602	1-3/C+gnd #6, 600 V, EPR insulation
						324.29	A-1005	1-3/C+gnd #6, 600 V, EPR insulation
0450	E-99, E-103, E-115	103	RGS conduit	732.20	2576.49	366.10	1626	1-3/C+gnd #4, 600 V, EPR insulation
						366.10	1627	1-3/C+gnd #4, 600 V, EPR insulation
0451	E-99, E-103, E-115	103	RGS conduit	849.65	3324.51	0.00	Pull Rope 1	Soft-Fiber Polyester
						262.68	A-1006	1-3/C + gnd #8, 600 V, EPR insulation
						262.68	A-1007	1-3/C + gnd #8, 600 V, EPR insulation
						324.29	A-1008	1-3/C + gnd #6, 600 V, EPR insulation
0452	E-99, E-103, E-115	103	RGS conduit	0.00	3324.51	0.00	Pull Rope 1	Soft-Fiber Polyester
0453	E-99, E-103, E-115	103	RGS conduit	972.87	3324.51	324.29	S-1601	1-3/C+gnd #6, 600 V, EPR insulation
						324.29	S-1602	1-3/C+gnd #6, 600 V, EPR insulation
						324.29	A-1005	1-3/C+gnd #6, 600 V, EPR insulation
0455	E-98, E-103, E-115	103	RGS conduit	0.00	3324.51	0.00	Pull Rope 1	Soft-Fiber Polyester
0456	E-98, E-103, E-115	103	RGS conduit	0.00	3324.51	0.00	Pull Rope 1	Soft-Fiber Polyester
0457	E-98, E-103, E-115	103	RGS conduit	0.00	3324.51	0.00	Pull Rope 1	Soft-Fiber Polyester
0458	E-98, E-103, E-115	103	RGS conduit	0.00	3324.51	0.00	Pull Rope 1	Soft-Fiber Polyester
0460	E-103, E-115	78	RGS conduit	0.00	1935.24	0.00	Pull Rope 1	Soft-Fiber Polyester
0461	E-103, E-115	78	RGS conduit	0.00	1935.24	0.00	Pull Rope 1	Soft-Fiber Polyester
0462	E-103, E-115	78	RGS conduit	0.00	1935.24	0.00	Pull Rope 1	Soft-Fiber Polyester
0463	E-103, E-115	78	RGS conduit	0.00	1935.24	0.00	Pull Rope 1	Soft-Fiber Polyester
0482	E-94	41	RGS conduit	0.00	534.55	0.00	Pull Rope 1	Soft-Fiber Polyester
0498			Not used					
0530	E-99, E-103, E-116	103	RGS conduit	0.00	3324.51	0.00	Pull Rope 1	Soft-Fiber Polyester
0531	E-99, E-103, E-116	103	RGS conduit	0.00	3324.51	0.00	Pull Rope 1	Soft-Fiber Polyester
0532	E-99, E-103, E-116	103	RGS conduit	0.00	3324.51	0.00	Pull Rope 1	Soft-Fiber Polyester
0533	E-99, E-103, E-116	103	RGS conduit	0.00	3324.51	0.00	Pull Rope 1	Soft-Fiber Polyester
0540	E-98, E-103, E-116	103	RGS conduit	0.00	3324.51	0.00	Pull Rope 1	Soft-Fiber Polyester
0541	E-98, E-103, E-116	103	RGS conduit	0.00	3324.51	0.00	Pull Rope 1	Soft-Fiber Polyester
0542	E-98, E-103, E-116	103	RGS conduit	0.00	3324.51	0.00	Pull Rope 1	Soft-Fiber Polyester
0543	E-98, E-103, E-116	103	RGS conduit	0.00	3324.51	0.00	Pull Rope 1	Soft-Fiber Polyester
0600	E-102, E-107, E-114	103	RGS conduit	1201.71	3324.51	0.00	Pull Rope 1	Soft-Fiber Polyester
						1201.71	2473-27	50 pair #18, shielded pairs, IS/OS shield 600 V, XLPE insul., PVC jacket
0601	E-102, E-107, E-114	103	RGS conduit	0.00	4404.97	0.00	Pull Rope 1	Soft-Fiber Polyester
0602	E-102, E-107, E-114	103	RGS conduit	0.00	3324.51	0.00	Pull Rope 1	Soft-Fiber Polyester
0489	E-94	41	RGS conduit	0.00	534.55		Pull Rope 1	Soft-Fiber Polyester

CONDUIT DATA

UNDERGROUND AND ROADWAY AT-GRADE

Conduit No.	Reference	Size	Type	Total Fill (mm²)	Allowable Fill (mm²)	Cable Area (mm²)	Included Cable No.	Conductor Type
0603	E-102, E-107, E-114	103	RGS conduit	1201.71	4404.97	1201.71	2474-27	50 pair #18, shielded pairs, IS/OS shield 600 V, XLPE insul., PVC jacket
						0.00	Pull Rope 1	Soft-Fiber Polyester
0604	E-107	103	RGS conduit	0.00	3324.51	0.00	Pull Rope 1	Soft-Fiber Polyester
0605	E-107	103	RGS conduit	1201.71	4404.97	1201.71	2473-27	50 pair #18, shielded pairs, IS/OS shield 600 V, XLPE insul., PVC jacket
						0.00	Pull Rope 1	Soft-Fiber Polyester
0606	E-107	103	RGS conduit	0.00	3324.51	0.00	Pull Rope 1	Soft-Fiber Polyester
0607	E-107	103	RGS conduit	1201.71	4404.97	1201.71	2474-27	50 pair #18, shielded pairs, IS/OS shield 600 V, XLPE insul., PVC jacket
						0.00	Pull Rope 1	Soft-Fiber Polyester
0608	E-107	103	RGS conduit	0.00	3324.51	0.00	Pull Rope 1	Soft-Fiber Polyester
0609	E-107	103	RGS conduit	1201.71	4404.97	1201.71	2473-27	50 pair #18, shielded pairs, IS/OS shield 600 V, XLPE insul., PVC jacket
						0.00	Pull Rope 1	Soft-Fiber Polyester
0610	E-107	103	RGS conduit	0.00	3324.51	0.00	Pull Rope 1	Soft-Fiber Polyester
0611	E-107	103	RGS conduit	1201.71	4404.97	0.00	Pull Rope 1	Soft-Fiber Polyester
						1201.71	2474-27	50 pair #18, shielded pairs, IS/OS shield 600 V, XLPE insul., PVC jacket
0612	E-107	103	RGS conduit	0.00	3324.51	0.00	Pull Rope 1	Soft-Fiber Polyester
0613	E-107	103	RGS conduit	1201.71	4404.97	1201.71	2473-27	50 pair #18, shielded pairs, IS/OS shield 600 V, XLPE insul., PVC jacket
						0.00	Pull Rope 1	Soft-Fiber Polyester
0614	E-107	103	RGS conduit	0.00	3324.51	0.00	Pull Rope 1	Soft-Fiber Polyester
0615	E-107	103	RGS conduit	1201.71	4404.97	1201.71	2474-27	50 pair #18, shielded pairs, IS/OS shield 600 V, XLPE insul., PVC jacket
						0.00	Pull Rope 1	Soft-Fiber Polyester
0616	E-107	103	RGS conduit	0.00	3324.51	0.00	Pull Rope 1	Soft-Fiber Polyester
0617	E-107	103	RGS conduit	1201.71	4404.97	1201.71	2473-27	50 pair #18, shielded pairs, IS/OS shield 600 V, XLPE insul., PVC jacket
						0.00	Pull Rope 1	Soft-Fiber Polyester
0618	E-107	103	RGS conduit	0.00	3324.51	0.00	Pull Rope 1	Soft-Fiber Polyester
0619	E-107	103	RGS conduit	1201.71	4404.97	1201.71	2474-27	50 pair #18, shielded pairs, IS/OS shield 600 V, XLPE insul., PVC jacket
						0.00	Pull Rope 1	Soft-Fiber Polyester
0620	E-107	103	RGS conduit	0.00	3324.51	0.00	Pull Rope 1	Soft-Fiber Polyester
0621	E-107	103	RGS conduit	1201.71	4404.97	1201.71	2473-27	50 pair #18, shielded pairs, IS/OS shield 600 V, XLPE insul., PVC jacket
						0.00	Pull Rope 1	Soft-Fiber Polyester
0622	E-107	103	RGS conduit	0.00	4404.97	0.00	Pull Rope 1	Soft-Fiber Polyester

For continuation, see next sheet.

MARK	DATE	DESCRIPTIONS	REV	CK	CCO NO.
1	8/29/08	Added cable/ckts. A-1006, A-1007, A-1008.	JH	EJL	Light Pipe

REVISIONS

CONTRACT CHANGE ORDER NO. 70
SHEET 33 OF 36 04-0120L4
10/16/08

DETAILS
CONDUIT AND TRAY SCHEDULE

E-234

STATE OF CALIFORNIA - DEPARTMENT OF TRANSPORTATION
Caltrans

DESIGN OVERSIGHT
BEHZAD GOLEMOHAMMADI

CALCULATED/DESIGNED BY	CHECKED BY	DATE REVISED BY	DATE REVISED
FK	AB	2/06	2/06

LAST REVISION 00-00-00
DATE PLOTTED => 8/28/2008
TIME PLOTTED => 11:57:29 AM

FOR REDUCED PLANS ORIGINAL 0 20 40 60 80

DGN FILE =>t:\13103\ms\pse\otd-contract 1\cco\electrical\cco-light pipe\40120lud234r1.dgn

DIST	COUNTY	ROUTE	KILOMETER POST TOTAL PROJECT	SHEET NO	TOTAL SHEETS
04	Ala	80	1.6/2.7	590 R1	643

REGISTERED ELECTRICAL ENGINEER 05/15/06 DATE

1-29-07
PLANS APPROVAL DATE

REGISTERED PROFESSIONAL ENGINEER JENS ERLINGSSON No. 8249 Exp. 9/30/08 ELECTRICAL STATE OF CALIFORNIA

PB POWER, inc.
A Parsons Brinckerhoff Company
303 Second St., Suite 700N
San Francisco, CA 94107-1317

The State of California or its officers or agents shall not be responsible for the accuracy or completeness of electronic copies of this plan sheet.

To get to the Caltrans web site, go to: http://www.dot.ca.gov

REGISTERED PROFESSIONAL ENGINEER FADI WALIEDDINE No. 11465 Exp. 12/31/2009 ELECTRICAL STATE OF CALIFORNIA

CONDUIT DATA

MOLE SUBSTATION

Conduit No.	Reference	Size	Type	Total Fill (mm²)	Allowable Fill (mm²)	Cable Area (mm²)	Included Cable No.	Conductor Type
601	E-124	103	RGS conduit	0.00	3324.51	0.00	Pull Rope 1	Soft-Fiber Polyester
602	E-124	78	RGS conduit	0.00	1935.24	0.00	Pull Rope 1	Soft-Fiber Polyester
603	E-124	78	RGS conduit	0.00	1935.24	0.00	Pull Rope 1	Soft-Fiber Polyester
604	E-124	78	RGS conduit	0.00	1935.24	0.00	Pull Rope 1	Soft-Fiber Polyester
605	E-124	78	RGS conduit	0.00	1935.24	0.00	Pull Rope 1	Soft-Fiber Polyester
606	E-124	78	RGS conduit	0.00	1935.24	0.00	Pull Rope 1	Soft-Fiber Polyester
607	E-124	78	RGS conduit	0.00	1935.24	0.00	Pull Rope 1	Soft-Fiber Polyester
608	E-124	78	RGS conduit	1514.04	1935.24	1514.04	2711-A	3+1gnd, 350 kcmil, #1/0, 600 V, RHH/RHW
						0.00	Pull Rope 1	Soft-Fiber Polyester
609	E-124	78	RGS conduit	1514.04	1935.24	0.00	Pull Rope 1	Soft-Fiber Polyester
						1514.04	2711-B	3+1gnd, 350 kcmil, #1/0, 600 V, RHH/RHW
610	E-124	78	RGS conduit	1514.04	1935.24	1514.04	1711-A	3+1gnd, 350 kcmil, #1/0, 600 V, RHH/RHW
						0.00	Pull Rope 1	Soft-Fiber Polyester
611	E-124	78	RGS conduit	1514.04	1935.24	1514.04	1711-B	3+1gnd, 350 kcmil, #1/0, 600 V, RHH/RHW
						0.00	Pull Rope 1	Soft-Fiber Polyester
612	E-124	78	RGS conduit	0.00	1935.24	0.00	Pull Rope 1	Soft-Fiber Polyester
613	E-124	78	RGS conduit	648.58	1499.81	324.29	1632	1-3/C+gnd #6, 600 V, EPR insulation
						324.29	1631	1-3/C+gnd #6, 600 V, EPR insulation
						0.00	Pull Rope 1	Soft-Fiber Polyester
614	E-124	78	RGS conduit	147.76	2564.19	147.76	1621	1-3/C+gnd #10, 600 V, EPR insulation
						0.00	Pull Rope 1	Soft-Fiber Polyester
615	E-124	78	RGS conduit	0.00	1935.24	0.00	Pull Rope 1	Soft-Fiber Polyester
616	E-124	78	RGS conduit	732.20	1499.81	366.10	1626	1-3/C+gnd #4, 600 V, EPR insulation
						366.10	1627	1-3/C+gnd #4, 600 V, EPR insulation
						0.00	Pull Rope 1	Soft-Fiber Polyester
617	E-124	78	RGS conduit	972.87	1935.24	324.29	S-1601	1-3/C+gnd #6, 600 V, EPR insulation
						0.00	Pull Rope 1	Soft-Fiber Polyester
						324.29	S-1602	1-3/C+gnd #6, 600 V, EPR insulation
						324.29	A-1005	1-3/C+gnd #6, 600 V, EPR insulation
618	E-124	78	RGS conduit	233.50	1499.81	116.75	1635	1-3/C+gnd #12, 600 V, EPR insulation
						116.75	1637	1-3/C+gnd #12, 600 V, EPR insulation
						0.00	Pull Rope 1	Soft-Fiber Polyester
619	E-124	78	RGS conduit	849.65	1935.24	0.00	Pull Rope 1	Soft-Fiber Polyester
						262.68	A-1006	1-3/C + gnd #8, 600 V, EPR insulation
						262.68	A-1007	1-3/C + gnd #8, 600 V, EPR insulation
						324.29	A-1008	1-3/C + gnd #6, 600 V, EPR insulation
620	E-124	78	RGS conduit	0.00	1935.24	0.00	Pull Rope 1	Soft-Fiber Polyester
621	E-124, E-151	41	RGS conduit	324.29	708.28	0.00	Pull Rope 1	Soft-Fiber Polyester
						324.29	1632	1-3/C+gnd #6, 600 V, EPR insulation
622	E-124, E-151	41	RGS conduit	469.06	534.55	0.00	Pull Rope 1	Soft-Fiber Polyester
						469.06	1632-1	4+1gnd #2, #6, 600 V, RHH/RHW insulation
623	E-124, E-151	78	RGS conduit	277.47	2564.19	0.00	Pull Rope 1	Soft-Fiber Polyester
						277.47	UP004-3	1-2/C+gnd #6, 600 V, EPR insulation
624	E-124, E-151	53	RGS conduit	324.29	1165.23	0.00	Pull Rope 1	Soft-Fiber Polyester
						324.29	1631	1-3/C+gnd #6, 600 V, EPR insulation
625	E-124, E-151	41	RGS conduit	205.22	414.28	0.00	Pull Rope 1	Soft-Fiber Polyester
						205.22	1651-2	2-1/C #2, 600 V, RHH/RHW insulation
626	E-124	41	RGS conduit	205.22	414.28	205.22	1651-3	2-1/C #2, 600 V, RHH/RHW insulation
						0.00	Pull Rope 1	Soft-Fiber Polyester
627	E-124, E-151	103	RGS conduit	205.22	2576.49	205.22	1651-1	2-1/C #2, 600 V, RHH/RHW insulation
						0.00	Pull Rope 1	Soft-Fiber Polyester
628	E-124	78	RGS conduit	1514.04	1935.24	1514.04	1711-A	3+1gnd, 350 kcmil, #1/0, 600 V, RHH/RHW
						0.00	Pull Rope 1	Soft-Fiber Polyester
629	E-124	78	RGS conduit	1514.04	1935.24	0.00	Pull Rope 1	Soft-Fiber Polyester
						1514.04	1711-B	3+1gnd, 350 kcmil, #1/0, 600 V, RHH/RHW
630	E-124	78	RGS conduit	1514.04	1935.24	0.00	Pull Rope 1	Soft-Fiber Polyester
						1514.04	2711-A	3+1gnd, 350 kcmil, #1/0, 600 V, RHH/RHW
631	E-124	78	RGS conduit	1514.04	1935.24	1514.04	2711-B	3+1gnd, 350 kcmil, #1/0, 600 V, RHH/RHW
						0.00	Pull Rope 1	Soft-Fiber Polyester

CONDUIT DATA

MOLE SUBSTATION

Conduit No.	Reference	Size	Type	Total Fill (mm²)	Allowable Fill (mm²)	Cable Area (mm²)	Included Cable No.	Conductor Type
632	E-124	78	RGS conduit	1514.04	1935.24	1514.04	1707	3+1gnd, 350 kcmil, #1/0, 600 V, RHH/RHW
						0.00	Pull Rope 1	Soft-Fiber Polyester
637	E-124, E-151	53	RGS conduit	507.52	879.42	126.88	DPA-5/7	1-3/C #10, 600 V, EPR insulation
						126.88	DPA-2/4	1-3/C #10, 600 V, EPR insulation
						126.88	DPA-6/8	1-3/C #10, 600 V, EPR insulation
						0.00	Pull Rope 1	Soft-Fiber Polyester
						126.88	DPA-1/3	1-3/C #10, 600 V, EPR insulation
638	E-124	53	RGS conduit	253.76	681.55	0.00	Pull Rope 1	Soft-Fiber Polyester
						126.88	DPA-6/8	1-3/C #10, 600 V, EPR insulation
						126.88	DPA-2/4	1-3/C #10, 600 V, EPR insulation
639	E-124	53	RGS conduit	253.76	681.55	126.88	DPA-5/7	1-3/C #10, 600 V, EPR insulation
						126.88	DPA-1/3	1-3/C #10, 600 V, EPR insulation
						0.00	Pull Rope 1	Soft-Fiber Polyester
642	E-124, E-151	53	RGS conduit	469.06	879.42	0.00	Pull Rope 1	Soft-Fiber Polyester
						469.06	1631-1	4+1gnd #2, #6, 600 V, RHH/RHW insulation
647	E-124	78	RGS conduit	1514.04	1935.24	0.00	Pull Rope 1	Soft-Fiber Polyester
						1514.04	1707	3+1gnd, 350 kcmil, #1/0, 600 V, RHH/RHW
648	E-124	53	RGS conduit	178.82	681.55	0.00	Pull Rope 1	Soft-Fiber Polyester
						116.75	1707-1	1-5/C #14, 600 V, EPR insulation
						62.07	1707-2	1-3/C #16, 600 V, EPR insulation
649	E-124	53	RGS conduit	147.76	1165.23	147.76	1621	1-3/C+gnd #10 ,600 V, EPR insulation
						0.00	Pull Rope 1	Soft-Fiber Polyester
650	E-124	53	RGS conduit	147.76	1165.23	147.76	1621-1	1-3/C+gnd #10 ,600 V, EPR insulation
						0.00	Pull Rope 1	Soft-Fiber Polyester
651	E-124, E-151	103	RGS conduit	2403.42	2576.49	1201.71	2473-27	50 pair #18, shielded pairs, IS/OS shield 600 V, XLPE insul., PVC jacket
						1201.71	1473-26	50 pair #18, shielded pairs, IS/OS shield 600 V, XLPE insul., PVC jacket
						0.00	Pull Rope 1	Soft-Fiber Polyester
652	E-124, E-151	103	RGS conduit	0.00	3324.51	0.00	Pull Rope 1	Soft-Fiber Polyester
653	E-124, E-151	103	RGS conduit	2403.42	2576.49	1201.71	2474-27	50 pair #18, shielded pairs, IS/OS shield 600 V, XLPE insul., PVC jacket
						1201.71	1474-26	50 pair #18, shielded pairs, IS/OS shield 600 V, XLPE insul., PVC jacket
						0.00	Pull Rope 1	Soft-Fiber Polyester
654	E-124, E-151	103	RGS conduit	0.00	3324.51	0.00	Pull Rope 1	Soft-Fiber Polyester
655	E-124	53	RGS conduit	62.07	1165.23	0.00	Pull Rope 1	Soft-Fiber Polyester
						62.07	1621-2	1-3/C #16, 600 V, EPR insulation
656	E-124, E-151	41	RGS conduit	196.20	414.28	98.10	1804	1 - 2 pair, shielded #18 with IS/OA, 600 V, PVC
						0.00	Pull Rope 1	Soft-Fiber Polyester
						98.10	1803	1 - 2 pair, shielded #18 with IS/OA, 600 V, PVC
657	E-124, E-151	53	RGS conduit	0.00	879.42	0.00	Pull Rope 1	Soft-Fiber Polyester
701	E-124	78	RGS conduit	0.00	1935.24	0.00	Pull Rope 1	Soft-Fiber Polyester

For continuation, see next sheet.

MARK	DATE	DESCRIPTIONS	REV	CK	CCO NO.
1	8/29/08	Added cable/ckts A-1006, A-1007 A-1008.	JH	EJL	Light Pipe

REVISIONS

CONTRACT CHANGE ORDER NO. 20
SHEET 34 OF 36 04-012014
10/16/08

DETAILS
CONDUIT AND TRAY SCHEDULE

E-237

STATE OF CALIFORNIA - DEPARTMENT OF TRANSPORTATION
Caltrans

DESIGN OVERSIGHT: BEHZAD GOLEMOHAMMADI

CALCULATED/DESIGNED BY	FK	DATE 2/06	REVISED BY	DATE REVISED
CHECKED BY	AB	2/06		

LAST REVISION 00-00-00
DATE PLOTTED => 8/28/2008
TIME PLOTTED => 11:57:32 AM

FOR REDUCED PLANS ORIGINAL 0 20 40 60 80

DGN FILE =>t:\13103\ms\pse\otd-contract 1\cco\electrical\cco-light pipe\401201ua237r1.dgn

DIST	COUNTY	ROUTE	KILOMETER POST TOTAL PROJECT	SHEET No.	TOTAL SHEETS
04	Alo	80	1.6/2.7	592 R1	643

REGISTERED ELECTRICAL ENGINEER — 05/15/08 DATE

1-29-07
PLANS APPROVAL DATE

REGISTERED PROFESSIONAL ENGINEER — JENS ERLINGSSON No. 8249 Exp. 9/30/08 ELECTRICAL — STATE OF CALIFORNIA

PB POWER, Inc.
A Parsons Brinckerhoff Company
303 Second St., Suite 700N
San Francisco, CA 94107-1317

The State of California or its officers or agents shall not be responsible for the accuracy or completeness of electronic copies of this plan sheet.

To get to the Caltrans web site, go to http://www.dot.ca.gov

REGISTERED PROFESSIONAL ENGINEER — FADI WALIEDDINE No. 11465 Exp. 12/31/2009 ELECTRICAL — STATE OF CALIFORNIA

Caltrans Metric

CONDUIT DATA

MOLE SUBSTATION

Conduit No.	Reference	Size	Type	Total Fill (mm²)	Allowable Fill (mm²)	Cable Area (mm²)	Included Cable No.	Conductor Type
731	E-124, E-151	103	RGS conduit	339.54	2576.49	0.00	Pull Rope 1	Soft-Fiber Polyester
						62.07	1651-4	1-3/C #16, 600 V, EPR insulation
						277.47	UP004-3	1-2/C+gnd #6, 600 V, EPR insulation
734	E-124	78	RGS conduit	62.07	2564.19	0.00	Pull Rope 1	Soft-Fiber Polyester
						62.07	1706-2	1-3/C #16, 600 V, EPR insulation
735	E-124	53	RGS conduit	0.00	879.42	0.00	Pull Rope 1	Soft-Fiber Polyester
737	E-124	53	RGS conduit	0.00	879.42	0.00	Pull Rope 1	Soft-Fiber Polyester
738	E-124	78	RGS conduit	205.22	1499.81	102.61	UP004-9	1-2/C+gnd #12, 600 V, EPR insulation
						0.00	Pull Rope 1	Soft-Fiber Polyester
						102.61	UP004-11	1-2/C+gnd #12, 600 V, EPR insulation
T20	E-124	610	152 mm siderail ladder	4904.14	17956.36	142.33	1705-2	1-5/C #12, 600 V, EPR insulation
						188.55	1704-3	1-12/C #16, 600 V, EPR insulation
						142.33	1703-2	1-5/C #12, 600 V, EPR insulation
						188.55	1703-3	1-12/C #16, 600 V, EPR insulation
						142.33	1702-2	1-5/C #12, 600 V, EPR insulation
						188.55	1702-3	1-12/C #16, 600 V, EPR insulation
						62.07	1702-5	1-3/C #16, 600 V, EPR insulation
						62.07	1706-2	1-3/C #16, 600 V, EPR insulation
						147.76	1621	1-3/C+gnd #10, 600 V, EPR insulation
						116.75	1707-1	1-5/C #14, 600 V, EPR insulation
						62.07	1621-2	1-3/C #16, 600 V, EPR insulation
						85.18	1472	1-3/C #14, 600 V, EPR insulation
						316.24	1705-3	1-12/C #12, 600 V, EPR insulation
						102.61	UP004-9	1-2/C+gnd #12, 600 V, EPR insulation
						102.61	UP004-11	1-2/C+gnd #12, 600 V, EPR insulation
						62.07	1651-4	1-3/C #16, 600 V, EPR insulation
						116.75	1637	1-3/C+gnd #12, 600 V, EPR insulation
					86.37 total dia.	.00	1707	3+1gnd, 350 kcmil, #1/0, 600 V, RHH/RHW Insulation
						142.33	1701-2	1-5/C #12, 600 V, EPR insulation
						62.07	1707-2	1-3/C #16, 600 V, EPR insulation
						137.01	1711-1	1-7/C #14, 600 V, EPR insulation
						137.01	2711-1	1-7/C #14, 600 V, EPR insulation
						142.33	1704-2	1-5/C #12, 600 V, EPR insulation
						137.01	2711-11	1-9/C #16, 600 V, EPR insulation
						137.01	2711-3	1-7/C #14, 600 V, EPR insulation
						137.01	1711-2	1-7/C #14, 600 V, EPR insulation
						137.01	1711-3	1-7/C #14, 600 V, EPR insulation
						85.18	1711-10	1-3/C #14, 600 V, EPR insulation
						137.01	1711-11	1-9/C #16, 600 V, EPR insulation
						137.01	1711-13	1-9/C #16, 600 V, EPR insulation
						137.01	1711-14	1-9/C #16, 600 V, EPR insulation
						188.55	1701-3	1-12/C #16, 600 V, EPR insulation
						137.01	2711-12	1-9/C #16, 600 V, EPR insulation
						188.55	2711-13	1-12/C #16, 600 V, EPR insulation
						137.01	2711-14	1-9/C #16, 600 V, EPR insulation
						137.01	2711-2	1-7/C #14, 600 V, EPR insulation
						137.01	1711-12	1-9/C #16, 600 V, EPR insulation
						85.18	2711-10	1-3/C #14, 600 V, EPR insulation
T21	E-124	910	152 mm siderail ladder	3075.86	26571.78	324.29	1632	1-3/C+gnd #6, 600 V, EPR insulation
						188.55	1703-3	1-12/C #16, 600 V, EPR insulation
						142.33	1705-2	1-5/C #12, 600 V, EPR insulation
						188.55	1702-3	1-12/C #16, 600 V, EPR insulation
						62.07	1702-5	1-3/C #16, 600 V, EPR insulation
						62.07	1706-2	1-3/C #16, 600 V, EPR insulation
						102.61	UP004-9	1-2/C+gnd #12, 600 V, EPR insulation
						62.07	1651-4	1-3/C #16, 600 V, EPR insulation
					86.37 total dia.	.00	1711-A	3+1gnd, 350 kcmil, #1/0, 600 V, RHH/RHW Insulation
						126.88	UP004-10	1-2/C+gnd #10, 600 V, EPR insulation
					86.37 total dia.	.00	1711-B	3+1gnd, 350 kcmil, #1/0, 600 V, RHH/RHW Insulation
						142.33	1703-2	1-5/C #12, 600 V, EPR insulation
						126.88	UP004-12	1-2/C+gnd #10, 600 V, EPR insulation
					86.37 total dia.	.00	2711-A	3+1gnd, 350 kcmil, #1/0, 600 V, RHH/RHW Insulation
						316.24	1705-3	1-12/C #12, 600 V, EPR insulation
						188.55	1704-3	1-12/C #16, 600 V, EPR insulation
						102.61	UP004-11	1-2/C+gnd #12, 600 V, EPR insulation
					86.37 total dia.	.00	2711-B	3+1gnd, 350 kcmil, #1/0, 600 V, RHH/RHW Insulation
						142.33	1701-2	1-5/C #12, 600 V, EPR insulation
						188.55	1701-3	1-12/C #16, 600 V, EPR insulation
						142.33	1704-2	1-5/C #12, 600 V, EPR insulation
					86.37 total dia.	.00	1707	3+1gnd, 350 kcmil, #1/0, 600 V, RHH/RHW Insulation
						324.29	1631	1-3/C+gnd #6, 600 V, EPR insulation
						142.33	1702-2	1-5/C #12, 600 V, EPR insulation

NOTES:

1. Circuits 1707, 1711-A, 1711-B, 2711-A and 2711-B routed inside cable trays shall be arranged in one level. No other cables shall be placed on them.

CONDUIT DATA

MOLE SUBSTATION

Conduit No.	Reference	Size	Type	Total Fill (mm²)	Allowable Fill (mm²)	Cable Area (mm²)	Included Cable No.	Conductor Type
T22	E-124	910	152 mm siderail ladder	5649.68 (1)	26675.42	116.75	1637	1-3/C+gnd #12, 600 V, EPR insulation
						324.29	A-1005	1-3/C+gnd #6, 600 V, EPR insulation
						324.29	S-1602	1-3/C+gnd #6, 600 V, EPR insulation
					86.37 total dia.	.00	1711-A	3+1gnd, 350 kcmil, #1/0, 600 V, RHH/RHW Insulation
					86.37 total dia.	.00	1711-B	3+1gnd, 350 kcmil, #1/0, 600 V, RHH/RHW Insulation
						126.88	UP004-10	1-2/C+gnd #10, 600 V, EPR insulation
						126.88	UP004-12	1-2/C+gnd #10, 600 V, EPR insulation
						102.61	UP004-11	1-2/C+gnd #12, 600 V, EPR insulation
						324.29	S-1601	1-3/C+gnd #6, 600 V, EPR insulation
						116.75	1635	1-3/C+gnd #12, 600 V, EPR insulation
						137.01	2711-3	1-7/C #14, 600 V, EPR insulation
						85.18	1472	1-3/C #14, 600 V, EPR insulation
						116.75	1634	1-3/C+gnd #12, 600 V, EPR insulation
						137.01	2711-12	1-9/C #16, 600 V, EPR insulation
						85.18	2711-10	1-3/C #14, 600 V, EPR insulation
						137.01	2711-11	1-9/C #16, 600 V, EPR insulation
					86.37 total dia.	.00	2711-A	3+1gnd, 350 kcmil, #1/0, 600 V, RHH/RHW Insulation
					86.37 total dia.	.00	2711-B	3+1gnd, 350 kcmil, #1/0, 600 V, RHH/RHW Insulation
						137.01	1711-11	1-9/C #16, 600 V, EPR insulation
						366.10	1626	1-3/C+gnd #4, 600 V, EPR insulation
						137.01	1711-13	1-9/C #16, 600 V, EPR insulation
						147.76	1621	1-3/C+gnd #10, 600 V, EPR insulation
						188.55	2711-13	1-12/C #16, 600 V, EPR insulation
						137.01	2711-14	1-9/C #16, 600 V, EPR insulation
						137.01	2711-2	1-7/C #14, 600 V, EPR insulation
						324.29	1632	1-3/C+gnd #6, 600 V, EPR insulation
						366.10	1627	1-3/C+gnd #4, 600 V, EPR insulation
						324.29	1631	1-3/C+gnd #6, 600 V, EPR insulation
						137.01	1711-12	1-9/C #16, 600 V, EPR insulation
						262.68 (1)	A-1006	1-3/C + gnd #8, 600 V, EPR insulation
						262.68 (1)	A-1007	1-3/C + gnd #8, 600 V, EPR insulation
						324.29 (1)	A-1008	1-3/C + gnd #6, 600 V, EPR insulation
T23	E-124	610	152 mm siderail ladder	2873.40 (1)	16774.16	116.75	1635	1-3/C+gnd #12, 600 V, EPR insulation
						116.75	1634	1-3/C+gnd #12, 600 V, EPR insulation
						324.29	A-1005	1-3/C+gnd #6, 600 V, EPR insulation
						324.29	S-1602	1-3/C+gnd #6, 600 V, EPR insulation
						324.29	S-1601	1-3/C+gnd #6, 600 V, EPR insulation
						366.10	1627	1-3/C+gnd #4, 600 V, EPR insulation
						262.68 (1)	A-1006	1-3/C + gnd #8, 600 V, EPR insulation
						262.68 (1)	A-1007	1-3/C + gnd #8, 600 V, EPR insulation
						324.29 (1)	A-1008	1-3/C + gnd #6, 600 V, EPR insulation
T24	E-124, E-150, E-151	610	152 mm siderail ladder	2554.72 (1)	16774.16	366.10	1626	1-3/C+gnd #4, 600 V, EPR insulation
						324.29	A-1005	1-3/C+gnd #6, 600 V, EPR insulation
						324.29	S-1602	1-3/C+gnd #6, 600 V, EPR insulation
						262.68 (1)	A-1006	1-3/C + gnd #8, 600 V, EPR insulation
						262.68 (1)	A-1007	1-3/C + gnd #8, 600 V, EPR insulation
						324.29 (1)	A-1008	1-3/C + gnd #6, 600 V, EPR insulation

For continuation, see next sheet.

MARK	DATE	DESCRIPTIONS	REV	CK	CCO NO.
1	8/29/08	Added cable/ckts A-1006, A-1007, A-1008	JH	EJL	Light Pipe

REVISIONS

CONTRACT CHANGE ORDER NO. 70
SHEET 35 OF 36 04-0120L4 10/16/08

DETAILS
CONDUIT AND TRAY SCHEDULE

E-239

STATE OF CALIFORNIA - DEPARTMENT OF TRANSPORTATION — Caltrans

DESIGN OVERSIGHT: BEHZAD GOLEMOHAMMADI

CALCULATED/DESIGNED BY — CHECKED BY — FK — DATE 2/06 — REVISED BY — DATE REVISED

LAST REVISION 00-00-00 — DATE PLOTTED => 8/28/2008 — TIME PLOTTED => 11:57:35 AM

DIST	COUNTY	ROUTE	KILOMETER POST TOTAL PROJECT	SHEET NO	TOTAL SHEETS
04	Ala	80	1.6/2.7	595 R1	643

REGISTERED ELECTRICAL ENGINEER 05/15/06 DATE

1-29-07
PLANS APPROVAL DATE

REGISTERED PROFESSIONAL ENGINEER JENS ERLINGSSON No. 8249 Exp. 9/30/08 ELECTRICAL STATE OF CALIFORNIA

PB POWER, Inc.
A Parsons Brinckerhoff Company
303 Second St., Suite 700N
San Francisco, CA 94107-1317

The State of California or its officers or agents shall not be responsible for the accuracy or completeness of electronic copies of this plan sheet.

To get to the Caltrans web site, go to http://www.dot.ca.gov

Caltrans Metric

REGISTERED PROFESSIONAL ENGINEER FADI WALIEDDINE No. 11465 Exp. 12/31/2009 ELECTRICAL STATE OF CALIFORNIA

CONDUIT DATA

MOLE SUBSTATION ARCHITECTURAL

Conduit No.	Reference	Size	Type	Total Fill (mm²)	Allowable Fill (mm²)	Cable Area (mm²)	Included Cable No.	Conductor Type
0201	AE-5, E-101, E-102, E-111	103	RGS conduit	0.00	3324.51	0.00	Pull Rope 1	Soft-Fiber Polyester
0202	AE-5, E-101, E-102, E-111	103	RGS conduit	2628.48	3324.51	2628.48	1003-1	3-1/C #4/0, 15 kV, EPR Insulation
						0.00	Pull Rope 1	Soft-Fiber Polyester
0203	AE-5, E-101, E-102, E-111	103	RGS conduit	0.00	3324.51	0.00	Pull Rope 1	Soft-Fiber Polyester
0204	AE-5, E-101, E-102, E-111	103	RGS conduit	0.00	3324.51	0.00	Pull Rope 1	Soft-Fiber Polyester
0205	AE-5, E-101, E-102, E-111	103	RGS conduit	0.00	3324.51	0.00	Pull Rope 1	Soft-Fiber Polyester
0206	AE-5, E-101, E-102, E-111	103	RGS conduit	0.00	3324.51	0.00	Pull Rope 1	Soft-Fiber Polyester
0216			Not used					
0300	AE-5, E-101, E-102, E-112	103	RGS conduit	0.00	3324.51	0.00	Pull Rope 1	Soft-Fiber Polyester
0301	AE-5, E-101, E-102, E-112	103	RGS conduit	2403.42	2576.49	0.00	Pull Rope 1	Soft-Fiber Polyester
						1201.71	1474-26	50 pair #18, shielded pairs, IS/OS shield 600 V, XLPE insul., PVC jacket
						1201.71	2474-27	50 pair #18, shielded pairs, IS/OS shield 600 V, XLPE insul., PVC jacket
0302	AE-5, E-101, E-102, E-112	103	RGS conduit	0.00	3324.51	0.00	Pull Rope 1	Soft-Fiber Polyester
0303	AE-5, E-101, E-102, E-112	103	RGS conduit	2403.42	2576.49	1201.71	1473-26	50 pair #18, shielded pairs, IS/OS shield 600 V, XLPE insul., PVC jacket
						1201.71	2473-27	50 pair #18, shielded pairs, IS/OS shield 600 V, XLPE insul., PVC jacket
						0.00	Pull Rope 1	Soft-Fiber Polyester
0304	AE-5, E-101, E-102, E-112	103	RGS conduit	196.20	2576.49	0.00	Pull Rope 1	Soft-Fiber Polyester
						98.10	1803	1 - 2 pair, shielded #18 with IS/OA, 600 V, PVC
						98.10	1804	1 - 2 pair, shielded #18 with IS/OA, 600 V, PVC
0305	AE-5, E-101, E-102, E-112	103	RGS conduit	0.00	3324.51	0.00	Pull Rope 1	Soft-Fiber Polyester
0306	AE-5, E-101, E-102, E-112	103	RGS conduit	0.00	3324.51	0.00	Pull Rope 1	Soft-Fiber Polyester
0307	AE-5, E-101, E-102, E-112	103	RGS conduit	0.00	3324.51	0.00	Pull Rope 1	Soft-Fiber Polyester
0400	AE-5, E-101, E-102, E-111	103	RGS conduit	732.20	2576.49	366.10	1627	1-3/C+gnd #4, 600 V, EPR insulation
						0.00	Pull Rope 1	Soft-Fiber Polyester
						366.10	1626	1-3/C+gnd #4, 600 V, EPR insulation
0401	AE-5, E-101, E-102, E-111	103	RGS conduit	849.65	3324.51	0.00	Pull Rope 1	Soft-Fiber Polyester
						262.68	A-1006	1-3/C + gnd #8, 600 V, EPR insulation
						262.68	A-1007	1-3/C + gnd #8, 600 V, EPR insulation
						324.29	A-1008	1-3/C + gnd #6, 600 V, EPR insulation
0402	AE-5, E-101, E-102, E-111	103	RGS conduit	0.00	3324.51	0.00	Pull Rope 1	Soft-Fiber Polyester
0403	AE-5, E-101, E-102, E-111	103	RGS conduit	0.00	3324.51	0.00	Pull Rope 1	Soft-Fiber Polyester
0404	AE-5, E-101, E-102, E-111	103	RGS conduit	0.00	3324.51	0.00	Pull Rope 1	Soft-Fiber Polyester
0405	AE-5, E-101, E-102, E-111	103	RGS conduit	0.00	3324.51	0.00	Pull Rope 1	Soft-Fiber Polyester
0406	AE-5, E-101, E-102, E-111	103	RGS conduit	0.00	3324.51	0.00	Pull Rope 1	Soft-Fiber Polyester
0407	AE-5, E-101, E-102, E-111	103	RGS conduit	0.00	3324.51	0.00	Pull Rope 1	Soft-Fiber Polyester
0408	AE-5, E-101, E-102, E-111	103	RGS conduit	0.00	3324.51	0.00	Pull Rope 1	Soft-Fiber Polyester

CONDUIT DATA

MOLE SUBSTATION ARCHITECTURAL

Conduit No.	Reference	Size	Type	Total Fill (mm²)	Allowable Fill (mm²)	Cable Area (mm²)	Included Cable No.	Conductor Type
0409	AE-5, E-101, E-102, E-111	103	RGS conduit	972.87	3324.51	324.29	S-1601	1-3/C+gnd #6, 600 V, EPR insulation
						324.29	S-1602	1-3/C+gnd #6, 600 V, EPR insulation
						324.29	A-1005	1-3/C+gnd #6, 600 V, EPR insulation
						0.00	Pull Rope 1	Soft-Fiber Polyester
0410	AE-5, E-101, E-102, E-111	103	RGS conduit	0.00	3324.51	0.00	Pull Rope 1	Soft-Fiber Polyester
0411	AE-5, E-101, E-102, E-111	103	RGS conduit	0.00	3324.51	0.00	Pull Rope 1	Soft-Fiber Polyester

MARK	DATE	DESCRIPTIONS	REV	CK	CCO NO.
1	8/29/08	Added cable/ckts A-1006, A-1007, A-1008	JH	EJL	Light Pipe

REVISIONS

CONTRACT CHANGE ORDER NO. 70
SHEET 36 OF 36 04-0120L4 10/16/08

DETAILS
CONDUIT AND TRAY SCHEDULE

E-242

STATE OF CALIFORNIA - DEPARTMENT OF TRANSPORTATION
Caltrans

DESIGN OVERSIGHT: BEHZAD GOLEMOHAMMADI

CALCULATED/DESIGNED BY: FK | DATE: 2/06 | REVISED BY
CHECKED BY: AB | 2/06 | DATE REVISED

LAST REVISION 00-00-00 | DATE PLOTTED => 8/28/2008 | TIME PLOTTED => 11:57:38 AM

FOR REDUCED PLANS ORIGINAL 0 20 40 60 80 | DGN FILE =>t:\13103\ms\pse\otd-contract 1\cco\electrical\cco-light pipe\40120luc242r1.dgn

STATE OF CALIFORNIA - DEPARTMENT OF TRANSPORTATION

CONTRACT CHANGE ORDER MEMORANDUM

DATE: 9/30/2008 Page 1 of 1

TO: AMER BATA / BEN GHAFGHAZI	FILE: E.A. 04 - 0120L4
FROM: BEN GHAFGHAZI	CO-RTE-PM ALA-80-1.6/2.7
	FED. NO. NO FED AID
CCO#: 70 SUPPLEMENT#: 0 Category Code: CBPC	CONTINGENCY BALANCE (incl. this change) $13,355,988.20
COST: $262,002.02 INCREASE ☑ DECREASE ☐	HEADQUARTERS APPROVAL REQUIRED? ☑ YES ☐ NO
SUPPLEMENTAL FUNDS PROVIDED: $0.00	IS THIS REQUEST IN ACCORDANCE WITH ENVIRONMENTAL DOCUMENTS? ☑ YES ☐ NO
CCO DESCRIPTION: Light pipe conduit in barrier.	**PROJECT DESCRIPTION:** Construct bridge, roadway, building and electrical system.

Original Contract Time:	Time Adj. This Change:	Previously Approved CCO Time Adjustments:	Percentage Time Adjusted: (including this change)	Total # of Unreconciled Deferred Time CCO(s): (including this change)
810 Day(s)	DEF Day(s)	179 Day(s)	22 %	6

THIS CHANGE ORDER PROVIDES FOR:

Installation of infrastructure and modification of circuits for future light pipe as shown on sheets 2 of 36 through 36 of 36 of the CCO. All work shall be in accordance with Section 10-3, "Signals, Lighting and Electrical Systems," of the Special Provisions and Section 86, "Signals, Lighting and Electrical Systems," of the Standard Specifications.

This change has been requested by Steven Hulsebus, District Division Chief, Office of Toll Bridge Design (memo attached). This change is necessary because conduits, pull boxes, conductors, and other related elements for future light pipe installation was not included in the original contract plans. Since these elements are to be placed within the bridge concrete the work must be performed on this contract.

For this work the contractor will be paid the sum of $262,002.02, which can be financed from the contingency fund. A detailed cost analysis is on file in the Resident Engineer's office.

This work has been discussed and concurred with Parviz Boozarpour of Electrical Design, Jaime Gutierrez of Project Development, and Greg Klein of Electrical Maintenance. Ken Terpsrta, Project Manager, concurs with this change. Issue and approve was granted by Headquarters on November 26, 2008

Adjustment of contract time is deferred pending completion of the work specified in this change as it may affect the controlling operation.

CONCURRED BY:		
Construction Engineer:	Ben Ghafghazi	Date 12/24/08
Bridge Engineer:		Date
Project Engineer:	Jaime Gutierrez	Date 9/30/08
Project Manager:	Ken Terprstra	Date 11/25/08
FHWA Rep.:		Date
Environmental:		Date
Other (specify):	Parviz Boozarpour, Elec. Design	Date 9/30/08
Other (specify):	Greg Klein, Electrical Maint.	Date 10/27/08
District Prior Approval By:		Date
HQ (Issue Approve) By:	Bob Molera	Date 11/26/08
Resident Engineer's Signature:		Date 12/24/08

ESTIMATE OF COST

	THIS REQUEST	TOTAL TO DATE
ITEMS	$0.00	$0.00
FORCE ACCOUNT	$0.00	$0.00
AGREED PRICE	$262,002.02	$262,002.02
ADJUSTMENT	$0.00	$0.00
TOTAL	$262,002.02	$262,002.02

FEDERAL PARTICIPATION

☐ PARTICIPATING ☐ PARTICIPATING IN PART ☑ NONE
☐ NON-PARTICIPATING (MAINTENANCE) ☐ NON-PARTICIPATING

FEDERAL SEGREGATION (if more than one Funding Source or P.I.P. type)
☑ CCO FUNDED PER CONTRACT ☐ CCO FUNDED AS FOLLOWS

FEDERAL FUNDING SOURCE	PERCENT

ADA Notice: For individuals with sensory disabilities, this document is available in alternate formats. For information call: (916) 654-6410 or TDD (916) 654-3880 or write Records and Forms Management, 1120 N Street, MS-89, Sacramento, CA 95814.

STATE OF CALIFORNIA - DEPARTMENT OF TRANSPORTATION

CONTRACT CHANGE ORDER MEMORANDUM

DATE: 4/6/2010 Page 1 of 1

TO: AMER BATA / BEN GHAFGHAZI

FROM: BEN GHAFGHAZI

FILE: **E.A.** 04 - 0120L4
CO-RTE-PM ALA-80-1.6/2.7
FED. NO. NO FED AID

CCO#: **70** SUPPLEMENT#: **1** Category Code: **AFZZ**

CONTINGENCY BALANCE (incl. this change) **$2,146,116.40**

COST: **$0.00** INCREASE ☐ DECREASE ☐

HEADQUARTERS APPROVAL REQUIRED? ☑ YES ☐ NO

SUPPLEMENTAL FUNDS PROVIDED: **$0.00**

IS THIS REQUEST IN ACCORDANCE WITH ENVIRONMENTAL DOCUMENTS? ☑ YES ☐ NO

CCO DESCRIPTION:
Time Adjustment of 0 Days

PROJECT DESCRIPTION:
Construct bridge, roadway, building and electrical system.

Original Contract Time:	Time Adj. This Change:	Previously Approved CCO Time Adjustments:	Percentage Time Adjusted: (including this change)	Total # of Unreconciled Deferred Time CCO(s): (including this change)
810 Day(s)	**0** Day(s)	**184** Day(s)	**23** %	**20**

THIS CHANGE ORDER PROVIDES FOR:
A time adjustment of 0 (zero) working days, in accordance with Section 8-1.07, "Liquidated Damages", of the Standard Specifications.

It has been determined that the work of Contract Change Order No. 70 has had no impact on the contractor's controlling operation. Therefore, a time extension of 0 days is recommended.

Total Time Adjustment = 0 Days

CONCURRED BY:

Construction Engineer:	Ben Ghafghazi	Date 4/7/2010
Bridge Engineer:		Date
Project Engineer:		Date
Project Manager:		Date
FHWA Rep.:		Date
Environmental:		Date
Other (specify):		Date
Other (specify):		Date
District Prior Approval By:		Date
HQ (Issue Approve) By:		Date
Resident Engineer's Signature:		Date 4/7/2010

ESTIMATE OF COST

	THIS REQUEST	TOTAL TO DATE
ITEMS	$0.00	$0.00
FORCE ACCOUNT	$0.00	$0.00
AGREED PRICE	$0.00	$262,002.02
ADJUSTMENT	$0.00	$0.00
TOTAL	$0.00	$262,002.02

FEDERAL PARTICIPATION

☐ PARTICIPATING ☐ PARTICIPATING IN PART ☑ NONE
☐ NON-PARTICIPATING (MAINTENANCE) ☐ NON-PARTICIPATING

FEDERAL SEGREGATION (if more than one Funding Source or P.I.P. type)
☑ CCO FUNDED PER CONTRACT ☐ CCO FUNDED AS FOLLOWS

FEDERAL FUNDING SOURCE	PERCENT

ADA Notice: For individuals with sensory disabilities, this document is available in alternate formats. For information call: (916) 654-6410 or TDD (916) 654-3880 or write Records and Forms Management, 1120 N Street, MS-89, Sacramento, CA 95814.

STATE OF CALIFORNIA - DEPARTMENT OF TRANSPORTATION

CONTRACT CHANGE ORDER

Change Requested by: Engineer

CCO: 70	Suppl. No. 1	Contract No. 04 - 0120L4	Road ALA-80-1.6/2.7	FED. AID LOC.: NO FED AID

To: **M C M CONSTRUCTION INC**

You are directed to make the following changes from the plans and specifications or do the following described work not included in the plans and specifications for this contract. ***NOTE: This change order is not effective until approved by the Engineer.***

Description of work to be done, estimate of quantities and prices to be paid. (Segregate between additional work at contract price, agreed price and force account.) Unless otherwise stated, rates for rental of equipment cover only such time as equipment is actually used and no allowance will be made for idle time. This last percentage shown is the net accumulated increase or decrease from the original quantity in the Engineer's Estimate.

TIME ADJUSTMENT:

A determination of the delay in completion of the contract due to the work specified by Contract Change Order No. 70 has been made in accordance with the provisions of Section 8-1.07 of the Standard Specifications.

Time Adjustment = 0 Days

Acceptance of this change order constitutes an agreement of full resolution of all time impact costs resulting from Change Order No. 70.

This change order acts to resolve the deferred time issued on Change Order No. 70, and no additional time shall be granted.

Estimated Cost: Increase ☐ **Decrease** ☐ **$0.00**

By reason of this order the time of completion will be adjusted as follows: 0 days

Signature	**Resident Engineer** BEN GHAFGHAZI	**Date** 4/7/2010
Signature	**Construction Manager** Amer Bata	**Date** 4/8/2010
Signature	**Construction Manager** Amer Bata	**Date** 7/14/10

We the undersigned contractor, have given careful consideration to the change proposed and agree, if this proposal is approved, that we will provide all equipment, furnish the materials, except as may otherwise be noted above, and perform all services necessary for the work above specified, and will accept as full payment therefor the prices shown above.

NOTE: If you, the contractor, do not sign acceptance of this order, your attention is directed to the requirements of the specifications as to proceeding with the ordered work and filing a written protest within the time therein specified.

Signature	**(Print name and title)** JAMES A. CARTER, PRESIDENT	**Date** 7/14/10

STATE OF CALIFORNIA - DEPARTMENT OF TRANSPORTATION

CONTRACT CHANGE ORDER

Change Requested by: Engineer

CCO 71	Suppl. No. 0	Contract No. 04 - 0120L4	Road ALA-80-1.6/2.7	FED. AID LOC.: NO FED AID

To: **M C M CONSTRUCTION INC**

You are directed to make the following changes from the plans and specifications or do the following described work not included in the plans and specifications for this contract. ***NOTE: This change order is not effective until approved by the Engineer.***

Description of work to be done, estimate of quantities and prices to be paid. (Segregate between additional work at contract price, agreed price and force account.) Unless otherwise stated, rates for rental of equipment cover only such time as equipment is actually used and no allowance will be made for idle time. This last percentage shown is the net accumulated increase or decrease from the original quantity in the Engineer's Estimate.

As resolution to NOPC #4, dated February 15, 2008, and Supplemental NOPC #4, dated February 28, 2008, MCM Construction Inc. agrees to accept 2 non-compensible working days as follows:

Non TRO Days: February 8 and 9, 2008.

This CCO resolves all issues related to NOPC #4 and Supplemental NOPC #4 and no further compensation shall be allowed.

Estimated Cost: Increase ☐ **Decrease** ☐ **$0.00**

By reason of this order the time of completion will be adjusted as follows: 2 days

Submitted by

Signature	Resident Engineer BEN GHAFGHAZI	Date 10/16/08

Approval Recommended by

Signature	Construction Engineer Ben Ghafghazi	Date 10/16/08

Engineer Approval by

Signature	Construction Manager Amer Bata	Date 2/4/09

We the undersigned contractor, have given careful consideration to the change proposed and agree, if this proposal is approved, that we will provide all equipment, furnish the materials, except as may otherwise be noted above, and perform all services necessary for the work above specified, and will accept as full payment therefor the prices shown above.

NOTE: If you, the contractor, do not sign acceptance of this order, your attention is directed to the requirements of the specifications as to proceeding with the ordered work and filing a written protest within the time therein specified.

Contractor Acceptance by

Signature	(Print name and title) EDMUNDO A. PUCHI, TREASURER	Date 2/2/09

STATE OF CALIFORNIA - DEPARTMENT OF TRANSPORTATION

CONTRACT CHANGE ORDER MEMORANDUM

DATE: 10/14/2008 Page 1 of 1

TO: AMER BATA / BEN GHAFGHAZI	FILE: E.A. 04 - 0120L4
FROM: BEN GHAFGHAZI	CO-RTE-PM ALA-80-1.6/2.7
	FED. NO. NO FED AID
CCO#: 71 SUPPLEMENT#: 0 Category Code: EXBD	CONTINGENCY BALANCE (incl. this change) $14,035,549.20
COST: $0.00 INCREASE ☐ DECREASE ☐	HEADQUARTERS APPROVAL REQUIRED? ☐ YES ☑ NO
SUPPLEMENTAL FUNDS PROVIDED: $0.00	IS THIS REQUEST IN ACCORDANCE WITH ENVIRONMENTAL DOCUMENTS? ☑ YES ☐ NO
CCO DESCRIPTION: Resolve NOPC #4	**PROJECT DESCRIPTION:** Construct bridge, roadway, building and electrical system.

Original Contract Time:	Time Adj. This Change:	Previously Approved CCO Time Adjustments:	Percentage Time Adjusted: (including this change)	Total # of Unreconciled Deferred Time CCO(s): (including this change)
810 Day(s)	2 Day(s)	0 Day(s)	0 %	6

THIS CHANGE ORDER PROVIDES FOR:

Resolution of all issues related to NOPC #4 dated February 15, 2008, and Supplemental NOPC#4, dated February 28, 2008. MCM Construction Inc. (MCM) agrees to accept 2 non-compensible working days as follows:

Non TRO Days: February 8 and 9, 2008.

NOPC #4 was filed by MCM in response to an ordered suspension of work by Caltrans on February 8, 2008. The suspension was ordered due to SWPPP issues raised during the Storm Water Task Force inspection of February 7, 2008. MCM was ordered to stop all operations related to structure excavation that could potentially cause a discharge of sediment into the bay. MCM stated in their NOPC's that since dredging is allowed by the contract sediment discharge is permitted within certain limits. MCM stated that because they chose not to dredge, their operation caused less impact than what the contract allows.

MCM claimed 96 hours of equipment delay for a total of $42,808.56, during which time they brought the jobsite into satisfactory compliance for the Storm Water Task Force. MCM and Caltrans management agreed that in lieu of any additional payment, granting 2 working days for the SWPPP work is fair compensation for the suspension.

This CCO resolves all issues related to NOPC #4 and Supplemental NOPC #4 and no further compensation shall be allowed. Design and Maintenance concurrence is not necessary since this CCO is for administrative purposes only.

CONCURRED BY:		
Construction Engineer:	Ben Ghafghazi	Date 10/16/08
Bridge Engineer:		Date
Project Engineer:		Date
Project Manager:		Date
FHWA Rep.:		Date
Environmental:		Date
Other (specify):		Date
Other (specify):		Date
District Prior Approval By:		Date
HQ (Issue Approve) By:		Date
Resident Engineer's Signature:		Date 10/16/08

ESTIMATE OF COST

	THIS REQUEST	TOTAL TO DATE
ITEMS	$0.00	$0.00
FORCE ACCOUNT	$0.00	$0.00
AGREED PRICE	$0.00	$0.00
ADJUSTMENT	$0.00	$0.00
TOTAL	$0.00	$0.00

FEDERAL PARTICIPATION

☐ PARTICIPATING ☐ PARTICIPATING IN PART ☑ NONE
☐ NON-PARTICIPATING (MAINTENANCE) ☐ NON-PARTICIPATING

FEDERAL SEGREGATION (if more than one Funding Source or P.I.P. type)
☑ CCO FUNDED PER CONTRACT ☐ CCO FUNDED AS FOLLOWS

FEDERAL FUNDING SOURCE	PERCENT

ADA Notice: For individuals with sensory disabilities, this document is available in alternate formats. For information call: (916) 654-6410 or TDD (916) 654-3880 or write Records and Forms Management, 1120 N Street, MS-89, Sacramento, CA 95814.

STATE OF CALIFORNIA - DEPARTMENT OF TRANSPORTATION

CONTRACT CHANGE ORDER

Change Requested by: Engineer

CCO 72	Suppl. No. 0	Contract No. 04 - 0120L4	Road ALA-80-1.6/2.7	FED. AID LOC.: NO FED AID

M C M CONSTRUCTION INC

You are directed to make the following changes from the plans and specifications or do the following described work not included in the plans and specifications for this contract. ***NOTE: This change order is not effective until approved by the Engineer.***

Description of work to be done, estimate of quantities and prices to be paid. (Segregate between additional work at contract price, agreed price and force account.) Unless otherwise stated, rates for rental of equipment cover only such time as equipment is actually used and no allowance will be made for idle time. This last percentage shown is the net accumulated increase or decrease from the original quantity in the Engineer's Estimate.

Revise Sections 10-1.86, "Rock Slope Protection (1T, Method B)," and 10-1.87, "Rock Slope Protection (Class 3 PM, Method B)," and 10-1.88, "Geotextile Filter Fabric," of the Special Provisions as shown below:

1) Section 10-1.86, "Rock Slope Protection (1T, Method B)," second paragraph is revised as follows:

"Rock slope protection fabric shall be geotextile filter fabric, and shall conform to "Geotextile Filter Fabric," of these Special Provisions."

2) Section 10-1.87, "Rock Slope Protection (Class 3 PM, Method B)," first paragraph is revised as follows:

"Rock slope protection fabric shall be geotextile filter fabric, and shall conform to "Geotextile Filter Fabric," of these Special Provisions."

3) Section 10-1.88, "Geotextile Filter Fabric," first paragraph is revised as follows:

"Geotextile filter fabric shall be furnished and installed at the locations of rock slope protection (1T, Method B) along the shoreline, and at rock slope protection (Class 3 PM, Method B), as shown on the plans, in conformance with these specifications, and as directed by the Engineer."

There shall be no additional cost for this CCO.

Estimated Cost: Increase ☐ **Decrease** ☐ **$0.00**

By reason of this order the time of completion will be adjusted as follows: 0 days

Submitted by		
Signature	Resident Engineer BEN GHAFGHAZI	Date 10/21/08
Approval Recommended by		
Signature	Construction Manager Amer Bata	Date 10/22/08
Engineer Approval by		
Signature	Construction Manager Amer Bata	Date 1/15/09

We the undersigned contractor, have given careful consideration to the change proposed and agree, if this proposal is approved, that we will provide all equipment, furnish the materials, except as may otherwise be noted above, and perform all services necessary for the work above specified, and will accept as full payment therefor the prices shown above.

NOTE: If you, the contractor, do not sign acceptance of this order, your attention is directed to the requirements of the specifications as to proceeding with the ordered work and filing a written protest within the time therein specified.

Contractor Acceptance by		
Signature	(Print name and title) EDMUNDO A. PUCHI, TREASURER	Date 1/14/09

STATE OF CALIFORNIA - DEPARTMENT OF TRANSPORTATION

CONTRACT CHANGE ORDER MEMORANDUM

TO: AMER BATA / BEN GHAFGHAZI	FILE: **E.A.** 04 - 0120L4
FROM: BEN GHAFGHAZI	**CO-RTE-PM** ALA-80-1.6/2.7
	FED. NO. NO FED AID
CCO#: **72** SUPPLEMENT#: **0** Category Code: **CDSA**	CONTINGENCY BALANCE (incl. this change) **$13,748,213.20**
COST: **$0.00** INCREASE ☐ DECREASE ☐	HEADQUARTERS APPROVAL REQUIRED? ☑ YES ☐ NO
SUPPLEMENTAL FUNDS PROVIDED: **$0.00**	IS THIS REQUEST IN ACCORDANCE WITH ENVIRONMENTAL DOCUMENTS? ☑ YES ☐ NO
CCO DESCRIPTION: Revise RSP fabric specifications	**PROJECT DESCRIPTION:** Construct bridge, roadway, building and electrical system.

Original Contract Time:	Time Adj. This Change:	Previously Approved CCO Time Adjustments:	Percentage Time Adjusted: (including this change)	Total # of Unreconciled Deferred Time CCO(s): (including this change)
810 Day(s)	**0** Day(s)	**2** Day(s)	**0** %	**6**

THIS CHANGE ORDER PROVIDES FOR:

Revising Sections 10-1.86, "Rock Slope Protection (1T, Method B)," and 10-1.87, "Rock Slope Protection (Class 3 PM, Method B)," and 10-1.88, "Geotextile Filter Fabric," of the Special Provisions as shown below:

1) Section 10-1.86, "Rock Slope Protection (1T, Method B)," subsection "B. Rock Slope Protection Along Shoreline," second paragraph is revised as follows:
"Rock slope protection fabric shall be geotextile filter fabric, and shall conform to "Geotextile Filter Fabric," of these Special Provisions."

2) Section 10-1.87, "Rock Slope Protection (Class 3 PM, Method B)," first paragraph is revised as follows:
"Rock slope protection fabric shall be geotextile filter fabric, and shall conform to "Geotextile Filter Fabric," of these Special Provisions."

3) Section 10-1.88, "Geotextile Filter Fabric," first paragraph is revised as follows:
"Geotextile filter fabric shall be furnished and installed at the locations of rock slope protection (1T, Method B) along the shoreline, and at rock slope protection (Class 3 PM, Method B), as shown on the plans, in conformance with these specifications, and as directed by the Engineer."

This change was requested by Jaime Gutierrez, Branch Chief, Office of Toll Bridge Design (memo attached). This change is necessary to resolve a conflict between the plans and Special Provisions. The plans show filter fabric to be used for rock slope protection fabric and the Special Provisions specify reinforcing fabric. Per the Geotechnical Branch, filter fabric is the correct material for this use, therefore, the Special Provisions need to be revised.

A detailed cost analysis has been performed and on file in the Resident Engineer's office. There shall be no cost associated with this CCO.

This change has been discussed and concurred with John O'Leary of Geotechnical. Maintenance concurrence is not required because the plans have not been changed. Pete Sigenthaler, Principal TE SFOBB, and Ken Terpstra, Project Manager, concurs with this change. Issue and approve was granted by Headquarters on November 3, 2008

No adjustment of contract time is warranted since this change does not affect the controlling operation.

ADA Notice: For individuals with sensory disabilities, this document is available in alternate formats. For information call: (916) 654-6410 or TDD (916) 654-3880 or write Records and Forms Management, 1120 N Street, MS-89, Sacramento, CA 95814.

CONCURRED BY:		
Construction Engineer:	Ben Ghafghazi	Date 1/15/09
Bridge Engineer:		Date
Project Engineer:	Jaime Gutierrez	Date 10/8/08
Project Manager:	Ken Terprstra	Date 10/29/08
FHWA Rep.:		Date
Environmental:		Date
Other (specify):	John O'Leary, Geotchnical	Date 10/21/08
Other (specify):	Patrick Treacy, HQ Const. Coord.	Date 10/23/08
District Prior Approval By:	Pete Siegenthaler, Principal TE	Date 10/22/08
HQ (Issue Approve) By:	Bob Molera	Date 11/3/08
Resident Engineer's Signature:		Date 1/15/09

ESTIMATE OF COST

	THIS REQUEST	TOTAL TO DATE
ITEMS	$0.00	$0.00
FORCE ACCOUNT	$0.00	$0.00
AGREED PRICE	$0.00	$0.00
ADJUSTMENT	$0.00	$0.00
TOTAL	$0.00	$0.00

FEDERAL PARTICIPATION

☐ PARTICIPATING ☐ PARTICIPATING IN PART ☑ NONE
☐ NON-PARTICIPATING (MAINTENANCE) ☐ NON-PARTICIPATING

FEDERAL SEGREGATION (if more than one Funding Source or P.I.P. type)
☑ CCO FUNDED PER CONTRACT ☐ CCO FUNDED AS FOLLOWS

FEDERAL FUNDING SOURCE	PERCENT

ADA Notice: For individuals with sensory disabilities, this document is available in alternate formats. For information call: (916) 654-6410 or TDD (916) 654-3880 or write Records and Forms Management, 1120 N Street, MS-89, Sacramento, CA 95814.

STATE OF CALIFORNIA - DEPARTMENT OF TRANSPORTATION

CONTRACT CHANGE ORDER

Change Requested by: Engineer

CCO 73	Suppl. No. 0	Contract No. 04 - 0120L4	Road ALA-80-1.6/2.7	FED. AID LOC.: NO FED AID

TO: M C M CONSTRUCTION INC

You are directed to make the following changes from the plans and specifications or do the following described work not included in the plans and specifications for this contract. ***NOTE: This change order is not effective until approved by the Engineer.***

Description of work to be done, estimate of quantities and prices to be paid. (Segregate between additional work at contract price, agreed price and force account.) Unless otherwise stated, rates for rental of equipment cover only such time as equipment is actually used and no allowance will be made for idle time. This last percentage shown is the net accumulated increase or decrease from the original quantity in the Engineer's Estimate.

Extra Work at Force Account:

Provide labor, equipment, and materials as necessary to modify existing electrical conduits within westbound Skyway structure to conform with new electrical conduits installed at Hinge EW on Bridge No. 34-0006L.

Estimated cost of Extra Work at Force Account $20,000.00

Estimated Cost: **Increase** ☑ **Decrease** ☐ **$20,000.00**

By reason of this order the time of completion will be adjusted as follows: 0 days

Submitted by

Signature	Resident Engineer BEN GHAFGHAZI	Date 10/20/08

Approval Recommended by

Signature	Construction Engineer Ben Ghafghazi	Date 10/20/08

Engineer Approval by

Signature	Construction Engineer Ben Ghafghazi	Date 1/15/09

We the undersigned contractor, have given careful consideration to the change proposed and agree, if this proposal is approved, that we will provide all equipment, furnish the materials, except as may otherwise be noted above, and perform all services necessary for the work above specified, and will accept as full payment therefor the prices shown above.

NOTE: If you, the contractor, do not sign acceptance of this order, your attention is directed to the requirements of the specifications as to proceeding with the ordered work and filing a written protest within the time therein specified.

Contractor Acceptance by

Signature	(Print name and title) EDMUNDO A. IUCHI, TREASURER	Date 1/13/09

STATE OF CALIFORNIA - DEPARTMENT OF TRANSPORTATION

CONTRACT CHANGE ORDER MEMORANDUM

DATE: 10/17/2008 Page 1 of 1

TO: AMER BATA / BEN GHAFGHAZI	FILE: E.A. 04 - 0120L4
FROM: BEN GHAFGHAZI	CO-RTE-PM ALA-80-1.6/2.7
	FED. NO. NO FED AID
CCO#: 73 SUPPLEMENT#: 0 Category Code: CHPT	CONTINGENCY BALANCE (incl. this change) $13,735,526.20
COST: $20,000.00 INCREASE ☑ DECREASE ☐	HEADQUARTERS APPROVAL REQUIRED? ☐ YES ☑ NO
SUPPLEMENTAL FUNDS PROVIDED: $7,313.39	IS THIS REQUEST IN ACCORDANCE WITH ENVIRONMENTAL DOCUMENTS? ☑ YES ☐ NO
CCO DESCRIPTION: Revise Skyway conduit to conform to OTD	**PROJECT DESCRIPTION:** Construct bridge, roadway, building and electrical system.

Original Contract Time:	Time Adj. This Change:	Previously Approved CCO Time Adjustments:	Percentage Time Adjusted: (including this change)	Total # of Unreconciled Deferred Time CCO(s): (including this change)
810 Day(s)	0 Day(s)	2 Day(s)	0 %	6

THIS CHANGE ORDER PROVIDES FOR:

Revise the location of the electrical conduits in the Skyway Structure at Hinge EW to conform with new electrical conduits to be installed per the approved Integrated Shop Drawing (ISD) plans at Hinge EW on Bridge No. 34-0006L.

This change is necessary because the existing conduits in the Skyway structure do not line up with the conduits to be installed per the approved ISD plans on this contract. The location of the conduits on this contract are constrained by rebar and cannot be moved without changing the reinforcing. The conduits in the Skyway are in a cell and the layout may be modified without any changes to the structure.

This work is not covered by any contract items, therefore, payment for this work will be at Extra Work at Force Account for an estimated cost of $20,000.00. This CCO can financed from a combination of the contingency fund and remaining supplemental funds of $7,313.39, allotted for this work.

Design and Maintenance concurrence is not necessary because there are no design changes being made.

No adjustment of contract time is warranted since this change does not affect the controlling operation.

CONCURRED BY:		
Construction Engineer:	Ben Ghafghazi	Date 10/21/08
Bridge Engineer:	Mehran Ardakanian	Date 10/21/08
Project Engineer:		Date
Project Manager:		Date
FHWA Rep.:		Date
Environmental:		Date
Other (specify):		Date
Other (specify):		Date
District Prior Approval By:		Date
HQ (Issue Approve) By:		Date
Resident Engineer's Signature:		Date 10/21/08

ESTIMATE OF COST

	THIS REQUEST	TOTAL TO DATE
ITEMS	$0.00	$0.00
FORCE ACCOUNT	$20,000.00	$20,000.00
AGREED PRICE	$0.00	$0.00
ADJUSTMENT	$0.00	$0.00
TOTAL	$20,000.00	$20,000.00

FEDERAL PARTICIPATION

☐ PARTICIPATING ☐ PARTICIPATING IN PART ☑ NONE
☐ NON-PARTICIPATING (MAINTENANCE) ☐ NON-PARTICIPATING

FEDERAL SEGREGATION (if more than one Funding Source or P.I.P. type)
☑ CCO FUNDED PER CONTRACT ☐ CCO FUNDED AS FOLLOWS

FEDERAL FUNDING SOURCE	PERCENT

ADA Notice: For individuals with sensory disabilities, this document is available in alternate formats. For information call: (916) 654-6410 or TDD (916) 654-3880 or write Records and Forms Management, 1120 N Street, MS-89, Sacramento, CA 95814.

STATE OF CALIFORNIA - DEPARTMENT OF TRANSPORTATION

CONTRACT CHANGE ORDER MEMORANDUM

DATE: 3/21/2010 Page 1 of 1

AMER BATA / BEN GHAFGHAZI

FROM: BEN GHAFGHAZI

FILE: E.A. 04 - 0120L4
CO-RTE-PM ALA-80-1.6/2.7
FED. NO. NO FED AID

CCO#: 73 SUPPLEMENT#: 1 Category Code: CHPT

CONTINGENCY BALANCE (incl. this change) $1,860,034.40

COST: $36,426.84 INCREASE ☑ DECREASE ☐

HEADQUARTERS APPROVAL REQUIRED? ☐ YES ☑ NO

SUPPLEMENTAL FUNDS PROVIDED: $0.00

IS THIS REQUEST IN ACCORDANCE WITH ENVIRONMENTAL DOCUMENTS? ☑ YES ☐ NO

CCO DESCRIPTION:
Revise Skyway conduit to conform to OTD

PROJECT DESCRIPTION:
Construct bridge, roadway, building and electrical system.

Original Contract Time:	Time Adj. This Change:	Previously Approved CCO Time Adjustments:	Percentage Time Adjusted: (including this change)	Total # of Unreconciled Deferred Time CCO(s): (including this change)
810 Day(s)	0 Day(s)	184 Day(s)	23 %	2

THIS CHANGE ORDER PROVIDES FOR:

Revising the location of the electrical conduits in the Skyway Structure at Hinge EE to conform with new electrical conduits to be installed, per the approved Integrated Shop Drawing (ISD) plans at Hinge EE on Bridge No. 34-0006R. Relocating any existing pipe sleeves and conduit couplings that are closer than 900 mm to pipe roller within Skyway structure.

This change is necessary because the existing conduits in the Skyway structure do not line up with the conduits to be installed per the approved ISD plans on this contract. The location of the conduits on this contract are constrained by rebar and cannot be moved without changing the reinforcing. The conduits in the Skyway are in a cell and the layout may be modified without any changes to the structure. Pipe sleeves and conduit couplings need to be relocated to allow conduits to move freely on the rollers during seismic events. CCO No. 73 Supplement 0 addressed the westbound bridges. This supplement addresses the eastbound bridges.

This work will be paid as Extra Work at Lump Sum for $36,426.84, which can be financed from the contingency fund.

Design and Maintenance concurrence is not necessary because this CCO only addresses layout due to field conditions and no design changes are being made.

No adjustment of contract time is warranted since this change does not affect the controlling operation.

CONCURRED BY:

Construction Engineer:	Ben Ghafghazi	Date 5/3/2010
Bridge Engineer:	Mehran Ardakanian	Date 12/15/09
Project Engineer:		Date
Project Manager:		Date
FHWA Rep.:		Date
Environmental:		Date
Other (specify):		Date
Other (specify):		Date
District Prior Approval By:		Date
HQ (Issue. Approve) By:		Date
Resident Engineer's Signature:		Date 5/3/2010

ESTIMATE OF COST

	THIS REQUEST	TOTAL TO DATE
ITEMS	$0.00	$0.00
FORCE ACCOUNT	$0.00	$20,000.00
AGREED PRICE	$36,426.84	$36,426.84
ADJUSTMENT	$0.00	$0.00
TOTAL	$36,426.84	$56,426.84

FEDERAL PARTICIPATION

☐ PARTICIPATING ☐ PARTICIPATING IN PART ☑ NONE
☐ NON-PARTICIPATING (MAINTENANCE) ☐ NON-PARTICIPATING

FEDERAL SEGREGATION (if more than one Funding Source or P.I.P. type)
☑ CCO FUNDED PER CONTRACT ☐ CCO FUNDED AS FOLLOWS

FEDERAL FUNDING SOURCE	PERCENT

ADA Notice: For individuals with sensory disabilities, this document is available in alternate formats. For information call: (916) 654-6410 or TDD (916) 654-3880 or write Records and Forms Management, 1120 N Street, MS-89, Sacramento, CA 95814.

STATE OF CALIFORNIA - DEPARTMENT OF TRANSPORTATION

CONTRACT CHANGE ORDER

Change Requested by: Engineer

CCO: 73	Suppl. No. 1	Contract No. 04 - 0120L4	Road ALA-80-1.6/2.7	FED. AID LOC.: NO FED AID

To: **M C M CONSTRUCTION INC**

You are directed to make the following changes from the plans and specifications or do the following described work not included in the plans and specifications for this contract. ***NOTE: This change order is not effective until approved by the Engineer.***

Description of work to be done, estimate of quantities and prices to be paid. (Segregate between additional work at contract price, agreed price and force account.) Unless otherwise stated, rates for rental of equipment cover only such time as equipment is actually used and no allowance will be made for idle time. This last percentage shown is the net accumulated increase or decrease from the original quantity in the Engineer's Estimate.

Extra Work at Lump Sum:

Provide labor, equipment, and materials necessary to modify existing electrical conduits within eastbound Skyway structure to conform with new electrical conduits installed at Hinge EE on Bridge No. 34-0006R and to relocate any existing pipe sleeves and conduit couplings that are closer than 900 mm to pipe roller within Skyway structure.

Extra Work at Lump Sum $36,426.84

Estimated Cost: Increase ☑ **Decrease** ☐ **$36,426.84**

By reason of this order the time of completion will be adjusted as follows: 0 days

Signature	**Resident Engineer** BEN GHAFGHAZI	**Date** 5/3/2010
Signature	**Construction Engineer** Ben Ghafghazi	**Date** 5/3/2010
Signature	**Construction Manager** Amer Bata	**Date** 6/3/10

We the undersigned contractor, have given careful consideration to the change proposed and agree, if this proposal is approved, that we will provide all equipment, furnish the materials, except as may otherwise be noted above, and perform all services necessary for the work above specified, and will accept as full payment therefor the prices shown above.

NOTE: If you, the contractor, do not sign acceptance of this order, your attention is directed to the requirements of the specifications as to proceeding with the ordered work and filing a written protest within the time therein specified.

Signature	**(Print name and title)** EDMUNDO A. PUCHI, TREASURER	**Date** 6/1/10

STATE OF CALIFORNIA - DEPARTMENT OF TRANSPORTATION

CONTRACT CHANGE ORDER

Change Requested by: Engineer

CCO 74	Suppl. No. 0	Contract No. 04 - 0120L4	Road ALA-80-1.6/2.7	FED. AID LOC.: NO FED AID

To: **M C M CONSTRUCTION INC**

You are directed to make the following changes from the plans and specifications or do the following described work not included in the plans and specifications for this contract. ***NOTE: This change order is not effective until approved by the Engineer.***

Description of work to be done, estimate of quantities and prices to be paid. (Segregate between additional work at contract price, agreed price and force account.) Unless otherwise stated, rates for rental of equipment cover only such time as equipment is actually used and no allowance will be made for idle time. This last percentage shown is the net accumulated increase or decrease from the original quantity in the Engineer's Estimate.

Extra Work at Lump Sum:

Provide professional design services to produce ISD's for Diaphragm D for Bridge No. 34-0006L and Bridge No. 34-0006R. All work shall be in accordance with Section 5-1.15, "Integrated Shop Drawings," of the Special Provisions. For this work, the contractor will be paid the sum of $28,322.00. This sum constitutes full compensation, including markups, for this change.

Extra Work at Agreed Lump Sum $28,322.00

Consideration of a time adjustment will be deferred until completion of the work specified herein. Determination of a commensurate time extension will be made in accordance with Section 10-1.14, "Progress Schedule (Critical Path Method)," of the Special Provisions and Section 8-1.07, "Liquidated Damages," of the Standard Specifications.

Estimated Cost: Increase ☑ **Decrease** ☐ **$28,322.00**

By reason of this order the time of completion will be adjusted as follows: Deferred

Submitted by

Signature	Resident Engineer BEN GHAFGHAZI	Date 11/14/08

Approval Recommended by

Signature	Construction Engineer Ben Ghafghazi	Date 11/14/08

Engineer Approval by

Signature	Construction Engineer Ben Ghafghazi	Date 12/11/08

We the undersigned contractor, have given careful consideration to the change proposed and agree, if this proposal is approved, that we will provide all equipment, furnish the materials, except as may otherwise be noted above, and perform all services necessary for the work above specified, and will accept as full payment therefor the prices shown above.

NOTE: If you, the contractor, do not sign acceptance of this order, your attention is directed to the requirements of the specifications as to proceeding with the ordered work and filing a written protest within the time therein specified.

Contractor Acceptance by

Signature	(Print name and title) EDMUNDO A. PUCHI, TREASURER	Date 12/5/08

STATE OF CALIFORNIA - DEPARTMENT OF TRANSPORTATION

CONTRACT CHANGE ORDER MEMORANDUM

TO: AMER BATA / BEN GHAFGHAZI	FILE: E.A. 04 - 0120L4
FROM: BEN GHAFGHAZI	CO-RTE-PM ALA-80-1.6/2.7
	FED. NO. NO FED AID
CCO#: 74 SUPPLEMENT#: 0 Category Code: AXZZ	CONTINGENCY BALANCE (incl. this change) $13,707,204.20
COST: $28,322.00 INCREASE ☑ DECREASE ☐	HEADQUARTERS APPROVAL REQUIRED? ☐ YES ☑ NO
SUPPLEMENTAL FUNDS PROVIDED: $0.00	IS THIS REQUEST IN ACCORDANCE WITH ENVIRONMENTAL DOCUMENTS? ☑ YES ☐ NO
CCO DESCRIPTION: ISD for Diaphragm D	**PROJECT DESCRIPTION:** Construct bridge, roadway, building and electrical system.

Original Contract Time:	Time Adj. This Change:	Previously Approved CCO Time Adjustments:	Percentage Time Adjusted: (including this change)	Total # of Unreconciled Deferred Time CCO(s): (including this change)
810 Day(s)	DEF Day(s)	2 Day(s)	0 %	7

THIS CHANGE ORDER PROVIDES FOR:

Providing professional design services to produce ISD's for Diaphragm D for Bridge No. 34-0006L and Bridge No. 34-0006R. All work shall be in accordance with Section 5-1.15, "Integrated Shop Drawings," of the Special Provisions.

The contract Special Provisions requires ISDs for the hinges (including Hinge E closures). The cost for generating the ISD's at Hinge E was included in the bid price for the contract. Diaphragm D also requires ISDs and is not considered part of Hinge E and was therefore not included in the original cost for Hinge E ISDs. This Contract Change Order is being generated to compensate the contractor for ISD work done on Diaphragm D for both the Left and Right Oakland Touchdown structures.

This work will be paid as Extra Work at Agreed Lump Sum of $28,322.00, which can be financed from the contingency fund. This sum constitutes full compensation, including markups, for this change. A detailed cost analysis is on file in the Resident Engineer's office.

Design and Maintenance concurrence is not necessary since this change is for administrative purposes only.

Adjustment of contract time is deferred pending completion of the work specified in this change as it may affect fabrication of rebar in the diaphragms, which may affect the controlling operation.

CONCURRED BY:		
Construction Engineer:	Ben Ghafghazi	Date 12/17/08
Bridge Engineer:	Mehran Ardakanian	Date 12/17/08
Project Engineer:		Date
Project Manager:		Date
FHWA Rep.:		Date
Environmental:		Date
Other (specify):		Date
Other (specify):		Date
District Prior Approval By:		Date
HQ (Issue Approve) By:		Date
Resident Engineer's Signature:		Date 12/17/08

ESTIMATE OF COST

	THIS REQUEST	TOTAL TO DATE
ITEMS	$0.00	$0.00
FORCE ACCOUNT	$0.00	$0.00
AGREED PRICE	$28,322.00	$28,322.00
ADJUSTMENT	$0.00	$0.00
TOTAL	$28,322.00	$28,322.00

FEDERAL PARTICIPATION

☐ PARTICIPATING ☐ PARTICIPATING IN PART ☑ NONE
☐ NON-PARTICIPATING (MAINTENANCE) ☐ NON-PARTICIPATING

FEDERAL SEGREGATION (if more than one Funding Source or P.I.P. type)
☑ CCO FUNDED PER CONTRACT ☐ CCO FUNDED AS FOLLOWS

FEDERAL FUNDING SOURCE	PERCENT

ADA Notice: For individuals with sensory disabilities, this document is available in alternate formats. For information call: (916) 654-6410 or TDD (916) 654-3880 or write Records and Forms Management, 1120 N Street, MS-89, Sacramento, CA 95814.

CONTRACT CHANGE ORDER

Change Requested by: Engineer

CCO: 75	Suppl. No. 0	Contract No. 04 - 0120L4	Road ALA-80-1.6/2.7	FED. AID LOC.: NO FED AID

To: **M C M CONSTRUCTION INC**

You are directed to make the following changes from the plans and specifications or do the following described work not included in the plans and specifications for this contract. ***NOTE: This change order is not effective until approved by the Engineer.***

Description of work to be done, estimate of quantities and prices to be paid. (Segregate between additional work at contract price, agreed price and force account.) Unless otherwise stated, rates for rental of equipment cover only such time as equipment is actually used and no allowance will be made for idle time. This last percentage shown is the net accumulated increase or decrease from the original quantity in the Engineer's Estimate.

A determination of the delay in the completion of the contract and in the completion of the Designated Portion of Work due to all outstanding Department caused delays incurred through December 5, 2008 has been made in accordance with Section 8-1.07, "Liquidated Damages," of the Standard Specifications, Sections 10-1.14, "Progress Schedule (Critical Path Method)," 10-1.15, "Time Related Overhead," and Section 4, "Beginning of Work, Time of Completion and Liquidated Damages," of the Special Provisions.

The Contractor shall be granted a 169 working day time extension pertaining to the completion of the contract and a 98 working day time extension pertaining to the completion of the Designated Portion of Work for Department caused delays. With these granted time extensions, the revised completion date for all contract work shall be May 13, 2010 and the revised completion date for the Designated Portion of the Work shall be September 24, 2009.

The actual days of delay recognized under this change are listed below:

CCO No. 30, Stabilize Footing Subgrade:	9 Working Days – January 16 through January 24, 2008
CCO No. 33, WB/EB Ftg. Rebar Changes:	15 Working Days – March 10 through March 24, 2008
ISD Delays:	67 Working Days – June 26 through August 31, 2008 (compensable)
ISD Delays:	31 Working Days – September 1 through October 1, 2008 (non-compensable)
Prestressing Conflicts:	47 Working Days - Future impacts (non-compensable)

This time extension acts to resolve all outstanding Department caused delay for all work performed through December 5, 2008 and no additional delays or time extensions shall be claimed or requested by the Contractor concerning work performed through this date.

The 169 working day time extension granted herein includes a 78 working day extension associated with concurrent impacts to the contract schedule. These 78 working days shall be granted as non-compensable time. Excluding any subcontractor costs, the Contractor shall not be entitled to compensation for any time related costs incurred pertaining to these 78 days.

It is recognized under the terms of this change order that the duration for the CPM schedule prestressing activity for both Frame 1 WB and Frame 1 EB has been revised from 5 days each to 23 days each. The commensurate time extension resulting from this revision is included within the 169 working day time extension granted under this change.

Any time related impacts incurred due to weather sensitive activities being extended into the 2008/2009 winter due to the Department caused delays recognized under this change order shall be deferred. These impacts shall be limited to the time period beginning on December 6, 2008 and ending on April 30, 2009. No additional weather impacts shall be granted outside of this time period. Any time extension resulting from the extension of weather sensitive activities into this period shall be granted as non-compensable time and the Contractor shall not be entitled to compensation for any costs incurred due to these impacts.

The definition of the completion of the designated portion of work in Section 4, paragraph 5, of the Special Provisions (Addendum No. 1) is revised as follows:

"The Designated Portion of Work shall include all work on the westbound structure (Bridge No. 34-0006L) and roadway, as shown on the plans and as specified in the special provisions with the exception of removal of falsework, concrete finish work of the columns, exterior girders, and soffit, and any and all appurtenances, such as conduit, placed outside the traveled way of the structure."

CONTRACT CHANGE ORDER

Change Requested by: Engineer

CCO: 75	Suppl. No. 0	Contract No. 04 - 0120L4	Road ALA-80-1.6/2.7	FED. AID LOC.: NO FED AID

Adjustment of Compensation at Lump Sum:

In accordance with Section 10-1.15, "Time Related Overhead," of the Special Provisions, the contractor shall be compensated an agreed lump sum of $2,246,913.76 ($24,691.36 per day for 91 working days). This sum constitutes full compensation, including all markups, for all additional TRO costs incurred due to this change. Payment will be made in accordance with Section 10-1.15, "Time Related Overhead," of the Special Provisions.

Item #6: Time Related Overhead
91 WDAY (+11.2%) @ $24,691.36/WDAY = +$2,246,913.76 (+22%)

Adjustment of Compensation at Agreed Lump Sum $2,246,913.76

The Contractor agrees to accept the lump sum of $910,000.00 for all impact costs including, but not limited to, equipment, escalations and inefficiencies, incurred due to the Department delays recognized under this change order and not included in the compensation provided under Time Related Overhead. This lump sum constitutes full compensation, including all markups, for all outstanding impact costs resulting from this change order. Full payment will be made upon approval of this change order.

Adjustment of Compensation at Agreed Lump Sum $910,000.00

Total Adjustment of Compensation at Agreed Lump Sum $3,156,913.76

Excluding any subcontractor costs, acceptance of this change order constitutes an agreement of full resolution of all time impact costs resulting from Change Orders No. 25, No. 27, No. 30, No. 33, No. 41, No. 74, Notice of Potential Claim No. 8 and all Integrated Shop Drawing delays through December 5, 2008 and no additional compensation will be allowed therefore.

This change order acts to resolve the deferred time issued on Change Orders No. 25, No. 27, No. 30, No. 33, No. 41, No. 74 and no additional time shall be granted.

Estimated Cost: **Increase** ☑ **Decrease** ☐ **$3,156,913.76**

By reason of this order the time of completion will be adjusted as follows: 169 days

Submitted by

Signature	Resident Engineer BEN GHAFGHAZI	Date 12/24/08

Approval Recommended by

Signature Mike Forner	Principal TE Mike Forner	Date 12/30/08

Engineer Approval by

Signature Mike Forner	Principal TE Mike Forner	Date 1-16-2009

We the undersigned contractor, have given careful consideration to the change proposed and agree, if this proposal is approved, that we will provide all equipn furnish the materials, except as may otherwise be noted above, and perform all services necessary for the work above specified, and will accept as full paymer therefor the prices shown above.

NOTE: If you, the contractor, do not sign acceptance of this order, your attention is directed to the requirements of the specifications as to proceeding with the ordered work and filing a written protest within the time therein specified.

Contractor Acceptance by

Signature	(Print name and title) Edmundo A. Ruchi - Treasurer	Date 1-14-2009

TOLL BRIDGE PROGRAM
OVERSIGHT COMMITTEE

TBPOC MEETING DECISIONS
December 23, 2008, 10:00 am – 1:00 pm

	Topic	Presenter	Outcome
1.	**CHAIR'S REPORT**	W. Kempton, CT	Information
2.	**CONSENT CALENDAR**		
	a. November 6, 2008 Meeting Minutes	A. Fremier, BATA	**APPROVED**
	b. November 14, 2008 Conference Call Minutes	A. Fremier, BATA	**APPROVED**
	c. 2009 TBPOC Meeting Calendar*	A. Fremier, BATA	**APPROVED**
3.	**PROGRESS REPORTS**		
	a. Final November 2008 Monthly Progress Report	A. Fremier, BATA	Information
	b. Draft December 2008 Monthly Progress Report	A. Fremier, BATA	Information
	c. FHWA 2008 Annual Update to the Financial Plan	P. Lee, BATA	**APPROVED**
4.	**PROGRAM ISSUES**		
	a. TY Lin Insurance Update	T. Anziano, CT	Information
	b. Education Program Partnership Update	Bart. Ney, CT	**APPROVED**
	c. Pier 7 Lease Extension with City of Oakland	T. Anziano, CT	**APPROVED**
	d. Small Business Participation Program	P. Pendergast	Information
5.	**SAN FRANCISCO-OAKLAND BAY BRIDGE UPDATES**		
	a. Self-Anchored Suspension Superstructure (SAS)		
	1) TBPOC/ABF Mitigation and Acceleration Update	A. Fremier, BATA	Information
	2) Contract Change Order 17, S3 – Electronic Document Management System	T. Anziano, CT	**APPROVED**
	b. Yerba Buena Island Detour (YBID)		
	1) Update	T. Anziano, CT	Information
	2) Contract Change Orders:	T. Anziano, CT	
	• Contract Change Order 116-1 – Skid Beam Design Modification & Shipping Costs		**APPROVED**
	• Contract Change Order 164 – Temp Crane Trestle		**APPROVED**
	• Contract Change Order 166 – Skid Bent/Beam Fabrication Incentive		**APPROVED**
	• Contract Change Order 169 – Skid Bent & Beam Jobsite Transportation Costs		**APPROVED**
	c. Yerba Buena Island Transition Structures (YBITS) No. 1		
	1) Update (matrix)	T. Anziano, CT	Information
	2) Addendum #2	T. Anziano, CT	**APPROVED**
	d. Oakland Touchdown (OTD) No. 1		
	1) Update	T. Anziano, CT	Information
	2) Contract Change Order 75 – Closeout of Time Extensions	T. Anziano, Ct	**APPROVED**
	e. Gateway Park Area		
	1) Update	S. Maller, CTC	Information
6.	**OTHER BUSINESS**	J. Barna, CTC	Information
	a. 2009 Issues		

STATE OF CALIFORNIA - DEPARTMENT OF TRANSPORTATION

SUPPLEMENTAL NOTICE OF POTENTIAL CLAIM

CEM-6201B (NEW 9/2002)

FOR STATE USE ONLY

(For Resident Engineer)

TO	CONTRACT NUMBER	DATE	IDENTIFICATION #
Ben Ghafghazi, R.E. (Resident Engineer)	04-0120L4	September 11, 2008	NOPC 6

This is a Supplemental Notice of Potential Claim for additional compensation submitted as required under the provisions of Section 9-1.04, "Notice of Potential Claim," of the Standard Specifications. The act of the engineer, of his/her failure to act, or the event, thing, occurrence, or other cause giving rise to the potential claim occurred on:

DATE

The particular nature and circumstances of this potential claim are described as follows:

ISD and P/S drawing delay due to unconstructibility within the contract plans, a change in pre-stressing sequence and a revision of the pre-stress force @ diaphragm C & D. Contract plan sheet 227/643 is inconstructable. Strand profile requires a 600T jack to stress the strands due to path profile, a monostrand jack can not work with the strand profile. A 1M opening behind the stressing plate is not enough room to place the jack on the strands and stress. The PT layout at diaphragm C & D need to be changed. The second impact is due to the changing of the stressing sequence in the plans. Finally, the stressing force supplied by the state to the contractor for diaphragm C & D was revised at a later date.

The basis of this potential claim including all relevant contract provisions are listed as follows:

Section 4-1.03, Changes of the Standard Specifications.

The estimated dollar cost of the potential claim including a description of how the estmate was derived and an itemized breakdown of individual costs are attached hereto:

The costs to this change are unknown to date since the revision to the plans is not complete.

A time impact analysis of the disputed disruption has been performed and is attached hereto/ The affect on the scheduled project completion date is as follows:

As of 9/12/08, MCM believes that the time delay is approximately 117days. As of the date of this form however, the impact to the total time of the delay is not obtainable since the revision to the plans is not complete.

are

made in full cognizance of the California False Claim Act, Government Code sections 12650 - 12655. The undersigned further understands and agrees that this potential claim to be further considered unless resolved, must fully conform to the requirements in Section 9-1.04 of the Standard Specifications and must be restated as a claim in the Contractor's written statement in conformance with Section 9-1.07B of the Standard Specifications.

MCM CONSTRUCTION INC.

Subcontractor or Contractor

(Circle One)

(Authorized Representative)

For subcontractor notice of potential claim

This notice of potential claim is acknowledged and forwarded by

MCM CONSTRUCTION, INC.

PRIME CONTRACTOR

(Authorized Representative)

CEM-6201 B (NEW 9/2002)

ADA Notice For individuals with sensory disabilities, this document is available in alternate formats. For information, call (916) 654-6410 or TDD (916) 654-3880 or write Records and Forms Management, 1120 N Street, MS-89, Sacramento CA 95814

STATE OF CALIFORNIA - DEPARTMENT OF TRANSPORTATION

CONTRACT CHANGE ORDER MEMORANDUM

TO: AMER BATA / BEN GHAFGHAZI	FILE: E.A. 04 - 0120L4
FROM: BEN GHAFGHAZI	CO-RTE-PM ALA-80-1.6/2.7
	FED. NO. NO FED AID
CCO#: 75 SUPPLEMENT#: 0 Category Code: AFZZ	CONTINGENCY BALANCE (incl. this change) $10,119,074.20
COST: $3,156,913.76 INCREASE ☑ DECREASE ☐	HEADQUARTERS APPROVAL REQUIRED? ☑ YES ☐ NO
SUPPLEMENTAL FUNDS PROVIDED: $0.00	IS THIS REQUEST IN ACCORDANCE WITH ENVIRONMENTAL DOCUMENTS? ☑ YES ☐ NO
CCO DESCRIPTION: Resolve time issues through 12/5/08.	**PROJECT DESCRIPTION:** Construct bridge, roadway, building and electrical system.

Original Contract Time:	Time Adj. This Change:	Previously Approved CCO Time Adjustments:	Percentage Time Adjusted: (including this change)	Total # of Unreconciled Deferred Time CCO(s): (including this change)
810 Day(s)	169 Day(s)	9 Day(s)	22 %	1

THIS CHANGE ORDER PROVIDES FOR:
a 169 working days extension to the contract completion date to resolve all Department caused delays through December 5, 2008.

The summary of granted delay days is shown and discussed below:

CCO No. 30 Stabilize Footing Subgrade:	9 days - January 16 through 24, 2008
CCO No. 33 WB/EB Footing Rebar Changes:	15 days - March 10 through 24, 2008
Integrated Shop Drawing Delays:	98 days - June 26 through Oct. 1, 2008
Prestressing Conflicts:	47 days - future impacts

These 169 days are detailed below:

Change Order No. 30 Stabilization of Footing Subgrade - 9 Working Days:
After the excavation for the Bent 18L, 19L and 20L foundations, it was determined that the foundation subgrade soil didn't have sufficient bearing capacity. Change Order No. 30 was issued to place rock into the subgrade in order to stabilize the soil. The change order was issued with deferred time and it has now been determined that the work impacted the contractor's controlling operation by 9 working days.

Change Order No. 33 Footing Reinforcement Changes -15 Working Days:
The contractor performed integrated shop drawings that identified numerous conflicts at Piers E-17L through E-22L footings of the westbound structure and resulted in the replacement of the planned U-shaped reinforcing steel with circumferential confining reinforcing steel. Supplement No. 1 to the change order implemented similar changes to the footings of the eastbound structure with both change orders being issued with deferred time. The changes to the steel have resulted in a 15 working day delay to the contractor's controlling operations.

Integrated Shop Drawing Impacts - 98 Working Days (31 days non-compensable):
This time extension is necessary for the impacts to the contract work due to delays from the integrated shop drawing (ISD) process including, but not limited to, delays associated with shop drawings for bent cap and column at E19L. The ISDs were required to be performed by the contractor because of the highly congested rebar arrangement in the bridge footings and pier caps. Based on these shop drawings, numerous conflicts were identified within the pier cap including contract plans that inaccurately show conduit and utility locations through the hinges and pier caps. The utility lines also had to be relocated to avoid the pier cap rebar and prestress ducts. The prestress paths were changed to make the pier caps constructible because of a necessary change in pre-stressing sequence, a revision to the pre-stress forces, and limited means of access for performing the work. Discussions between Design and the Contractor to resolve ISDs conflicts were necessary and time consuming. These factors contributed to slow fabrication and delivery of the rebar to the jobsite and hence caused delays to the contract controlling operations. The contractor has agreed to accept 31 of the 98 days as non-compensable time in recognition of their own untimely responses in resolving the ISD conflicts.

Prestressing Conflicts – 47 Working Days (non-compensable):
This change order provides 47 non-compensable days resulting from ambiguous stressing sequencing for Frame 1 WB and Frame 1 EB. The sequence of the stressing that was provided in the contract plans was unusually complex, comprised of longitudinal, transverse and vertical stressing members, and was addressed on various plan sheets and locations within the

ADA Notice: For individuals with sensory disabilities, this document is available in alternate formats. For information call: (916) 654-6410 or TDD (916) 654-3880 or write Records and Forms Management, 1120 N Street, MS-89, Sacramento, CA 95814.

Special Provisions. It took several meetings with the design team to clarify the intent of the prestressing sequence in the plans. Eventually it was determined that the sequencing shown in the contract plans was incorrect and revised plans were issued under Change Order No. 62. It is now estimated that the prestressing will consume 23 work days on both Frame 1 of the westbound and Frame 1 of the eastbound structure compared to the 5 work days each allotted for these activities by the contractor in their baseline schedule. The end result is a 47 working day extension to the contract. This 47 day extension is considered concurrent delay due to joint responsibility stemming from the ambiguities and errors in the plans and the unrealistic activity durations in the contractor's baseline schedule. The change order acts to adjust the Frame 1 WB and EB prestressing activities from 5 days each to 23 days each with any additional impact deferred pending completion of the actual work.

The change order acts to extend the milestone to complete the Designated Portion of the Work by 98 working days. This milestone, as specified in the contract special provisions, requires the completion of the westbound structure and roadway in order for the structure to be used by the adjacent SAS contract. The extension provided under this change order has no impact on the SFOBB Corridor schedule.

Compensation for additional time related overhead costs shall be paid as an adjustment of compensation at agreed lump sum of $2,246,913.76 prorated as-bid rate of $24,691.36 per day for 91 days- Item #6: Time Related Overhead 91 WDAY (+11.2%) @ $24,691.36/WDAY = +$2,246,913.76 (+22%)). Compensation for extended project equipment and material costs resulting from the 91 day extension will be paid as an adjustment of compensation at an agreed lump sum of $910,000.00. The total cost of this change order is $3,156,913.76 which shall be financed from the contingency fund. An analysis of the time deferral and labor, material, and equipment costs associated with this change is maintained in contract files.

Acceptance of this change order constitutes full settlement of all time related costs for all ISDs related issues, CCO No. 30, and CCO No. 33 performed through December 5, 2008, and no additional compensation will be allowed. The Contractor has agreed to the terms of this change.

The direct cost of specific changes identified in the ISD process will be addressed in separate change order, however, no time extensions associated with the production of ISDs will be granted.

This change order is an Entitlement Claim Resolution change order and acts to resolve the deferred time issued on Change Orders No. 25, No. 27, No. 30, No. 33, No. 41, No. 74, Notice of Potential Claim No. 8 and no additional time shall be granted. A Time Impact Analysis addressing the time related issues is maintained in contract files in accordance with Section 10-1.14, Progress Schedule (Critical Path Method) subsection Time Impact Analysis of the Special Provisions.

This change has been discussed and concurred with Patrick Treacy, HQ Coordinator; Mike Forner, SFOBB Construction Manager; and Alec Melkonians for Project Manager Ken Terpstra. Design and Maintenance concurrence is not necessary because this CCO is for time adjustment only. This CCO was presented to TBPOC by Mr. Tony Anziano and was approved on December 23, 2008. An Issue and Approve was granted by Headquarters on December 31, 2008.

CONCURRED BY:		
Construction Engineer	for Ben Ghafghazi	Date 01/16/09
Bridge Engineer:	Mehran Arda Kanian	Date 01/16/09
Project Engineer:		Date
Project Manager:	Alec Melkonians	Date 12/17/08
FHWA Rep.:		Date
Environmental:		Date
Other (specify):	Patrick Treacy, HQ Const. Coord.	Date 12/17/08
Other (specify):		Date
District Prior Approval By:	Mike Forner, Principal TE	Date 12/17/08
HQ (Issue Approve) By:	Bob Molera	Date 12/31/08
Resident Engineer's Signature:		Date 01/16/09

ESTIMATE OF COST

	THIS REQUEST	TOTAL TO DATE
ITEMS	$0.00	$0.00
FORCE ACCOUNT	$0.00	$0.00
AGREED PRICE	$0.00	$0.00
ADJUSTMENT	$3,156,913.76	$3,156,913.76
TOTAL	$3,156,913.76	$3,156,913.76

FEDERAL PARTICIPATION

☐ PARTICIPATING ☐ PARTICIPATING IN PART ☑ NONE
☐ NON-PARTICIPATING (MAINTENANCE) ☐ NON-PARTICIPATING

FEDERAL SEGREGATION (if more than one Funding Source or P.I.P. type)
☑ CCO FUNDED PER CONTRACT ☐ CCO FUNDED AS FOLLOWS

FEDERAL FUNDING SOURCE	PERCENT

ADA Notice: For individuals with sensory disabilities, this document is available in alternate formats. For information call: (916) 654-6410 or TDD (916) 654-3880 or write Records and Forms Management, 1120 N Street, MS-89, Sacramento, CA 95814.

STATE OF CALIFORNIA - DEPARTMENT OF TRANSPORTATION

CONTRACT CHANGE ORDER

Change Requested by: Engineer

CCO 76	Suppl. No. 0	Contract No. 04 - 0120L4	Road ALA-80-1.6/2.7	FED. AID LOC.: NO FED AID

To: **M C M CONSTRUCTION INC**

You are directed to make the following changes from the plans and specifications or do the following described work not included in the plans and specifications for this contract. ***NOTE: This change order is not effective until approved by the Engineer.***

Description of work to be done, estimate of quantities and prices to be paid. (Segregate between additional work at contract price, agreed price and force account.) Unless otherwise stated, rates for rental of equipment cover only such time as equipment is actually used and no allowance will be made for idle time. This last percentage shown is the net accumulated increase or decrease from the original quantity in the Engineer's Estimate.

Extra Work at Force Account:

Modify stud layout of State Furnished Hinge E bearings to match layout per Hinge E Bearing Details No. 1 through No. 4 shown on contract plan sheets 254 through 257 of 643. Existing studs shall be removed and replaced with new studs.

Studs shall be welded in accordance with AWS D1.5 Section 7. Appropriate prequalification and pre-production tests shall be performed as required by AWS D1.5. AWS D1.5 Section 7.7.5, regarding the removal of studs, shall be strictly adhered to. The Engineer shall be notified prior to welding of the studs to allow for verification of appropriate documentation and witnessing of the welding operation

Estimated cost of Extra Work at Force Account $20,000.00

Consideration of a time adjustment will be deferred until completion of the work specified herein. Determination of a commensurate time extension will be made in accordance with Section 10-1.14, "Progress Schedule (Critical Path Method)," of the Special Provisions and Section 8-1.07, "Liquidated Damages," of the Standard Specifications.

Estimated Cost: Increase ☑ **Decrease** ☐ **$20,000.00**

By reason of this order the time of completion will be adjusted as follows: Deferred

Submitted by

Signature	Resident Engineer BEN GHAFGHAZI	Date 12/11/08

Approval Recommended by

Signature	Construction Engineer Ben Ghafghazi	Date 12/11/08

Engineer Approval by

Signature	Construction Engineer Ben Ghafghazi	Date 12/19/08

We the undersigned contractor, have given careful consideration to the change proposed and agree, if this proposal is approved, that we will provide all equipment, furnish the materials, except as may otherwise be noted above, and perform all services necessary for the work above specified, and will accept as full payment therefor the prices shown above.

NOTE: If you, the contractor, do not sign acceptance of this order, your attention is directed to the requirements of the specifications as to proceeding with the ordered work and filing a written protest within the time therein specified.

Contractor Acceptance by

Signature	(Print name and title) EDMUNDO A. PUCHI, TREASURER	Date 12/17/08

STATE OF CALIFORNIA - DEPARTMENT OF TRANSPORTATION

CONTRACT CHANGE ORDER MEMORANDUM

TO: AMER BATA / BEN GHAFGHAZI	FILE: E.A. 04 - 0120L4
FROM: BEN GHAFGHAZI	CO-RTE-PM ALA-80-1.6/2.7
	FED. NO. NO FED AID
CCO#: 76 SUPPLEMENT#: 0 Category Code: CHPT	CONTINGENCY BALANCE (incl. this change) $13,687,204.20
COST: $20,000.00 INCREASE ☑ DECREASE ☐	HEADQUARTERS APPROVAL REQUIRED? ☐ YES ☑ NO
SUPPLEMENTAL FUNDS PROVIDED: $0.00	IS THIS REQUEST IN ACCORDANCE WITH ENVIRONMENTAL DOCUMENTS? ☑ YES ☐ NO
CCO DESCRIPTION: Modify Hinge E bearing stud layout	**PROJECT DESCRIPTION:** Construct bridge, roadway, building and electrical system.

Original Contract Time:	Time Adj. This Change:	Previously Approved CCO Time Adjustments:	Percentage Time Adjusted: (including this change)	Total # of Unreconciled Deferred Time CCO(s): (including this change)
810 Day(s)	DEF Day(s)	9 Day(s)	1 %	7

THIS CHANGE ORDER PROVIDES FOR:

Modifying stud layout on State Furnished Hinge E bearings to match layout shown on Hinge E Bearing Details No. 1 through No. 4 of the contract plans. This layout is shown on sheets 254 through 257 of 643 of the contract plans. Existing studs shall be removed and replaced with new studs. Studs shall be welded in accordance with AWS D1.5 Section 7. Removal of studs shall be in accordance with AWS D1.5 Section 7.7.5.

This change is necessary because the stud layout of the State Furnished Hinge E bearings does not match the layout shown on the Hinge E Bearing Details plans. Integrated Shop Drawing (ISD) modeling was performed using the stud layout per the contract plans. The plan layout does not require any changes to reinforcing in the diaphragms at Hinge E. The as built layout of the studs do require modifications to the reinforcing in order to avoid conflicts. In lieu of making any design changes to the reinforcing, the existing studs will be removed and replaced with new studs per the plan layout.

This work will be paid as Extra Work at Force Account for $20,000.00, which can be financed from the contingency fund.

This work has been discussed and concurred with Tony Mullin, Structural Materials Representative. Design and Maintenance concurrence is not necessary since there are no design changes being made.

Adjustment of contract time is deferred pending completion of the work specified in this change as it may affect fabrication of rebar in the diaphragms, which may affect the controlling operation.

CONCURRED BY:		
Construction Engineer:	Ben Ghafghazi	Date 12/11/07
Bridge Engineer:	Mehran Ardakanian	Date 12/12/08
Project Engineer:		Date
Project Manager:		Date
FHWA Rep.:		Date
Environmental:		Date
Other (specify):	Tony Mullin, METS	Date 11/24/08
Other (specify):		Date
District Prior Approval By:		Date
HQ (Issue Approve) By:		Date
Resident Engineer's Signature:		Date 12/11/08

ESTIMATE OF COST

	THIS REQUEST	TOTAL TO DATE
ITEMS	$0.00	$0.00
FORCE ACCOUNT	$20,000.00	$20,000.00
AGREED PRICE	$0.00	$0.00
ADJUSTMENT	$0.00	$0.00
TOTAL	$20,000.00	$20,000.00

FEDERAL PARTICIPATION

☐ PARTICIPATING ☐ PARTICIPATING IN PART ☑ NONE
☐ NON-PARTICIPATING (MAINTENANCE) ☐ NON-PARTICIPATING

FEDERAL SEGREGATION (if more than one Funding Source or P.I.P. type)
☑ CCO FUNDED PER CONTRACT ☐ CCO FUNDED AS FOLLOWS

FEDERAL FUNDING SOURCE	PERCENT

ADA Notice: For individuals with sensory disabilities, this document is available in alternate formats. For information call: (916) 654-6410 or TDD (916) 654-3880 or write Records and Forms Management, 1120 N Street, MS-89, Sacramento, CA 95814.

STATE OF CALIFORNIA - DEPARTMENT OF TRANSPORTATION

CONTRACT CHANGE ORDER MEMORANDUM

DATE: 4/1/2010 Page 1 of 1

TO: AMER BATA / BEN GHAFGHAZI	FILE: **E.A.** 04 - 0120L4
FROM: BEN GHAFGHAZI	**CO-RTE-PM** ALA-80-1.6/2.7
	FED. NO. NO FED AID
CCO#: **76** SUPPLEMENT#: **1** Category Code: **AFZZ**	CONTINGENCY BALANCE (incl. this change) **$2,172,973.40**
COST: **$0.00** INCREASE ☐ DECREASE ☐	HEADQUARTERS APPROVAL REQUIRED? ☐ YES ☑ NO
SUPPLEMENTAL FUNDS PROVIDED: **$0.00**	IS THIS REQUEST IN ACCORDANCE WITH ENVIRONMENTAL DOCUMENTS? ☑ YES ☐ NO
CCO DESCRIPTION: Time Adjustment of 0 Days	**PROJECT DESCRIPTION:** Construct bridge, roadway, building and electrical system.

Original Contract Time:	Time Adj. This Change:	Previously Approved CCO Time Adjustments:	Percentage Time Adjusted: (including this change)	Total # of Unreconciled Deferred Time CCO(s): (including this change)
810 Day(s)	**0** Day(s)	**184** Day(s)	**23** %	**14**

THIS CHANGE ORDER PROVIDES FOR:

A time adjustment of 0 (zero) working days, in accordance with Section 8-1.07, "Liquidated Damages", of the Standard Specifications.

It has been determined that the work of Contract Change Order No. 76 ~~has~~ had no impact on the contractor's controlling operation. Therefore, a time extension of 0 days is recommended.

Total Time Adjustment = 0 Days

CONCURRED BY:		
Construction Engineer:	Ben Ghafghazi	Date 4/6/2010
Bridge Engineer:		Date
Project Engineer:		Date
Project Manager:		Date
FHWA Rep.:		Date
Environmental:		Date
Other (specify):		Date
Other (specify):		Date
District Prior Approval By:		Date
HQ (Issue Approve) By:		Date
Resident Engineer's Signature:		Date 4/6/2010

ESTIMATE OF COST

	THIS REQUEST	TOTAL TO DATE
ITEMS	$0.00	$0.00
FORCE ACCOUNT	$0.00	$20,000.00
AGREED PRICE	$0.00	$0.00
ADJUSTMENT	$0.00	$0.00
TOTAL	$0.00	$20,000.00

FEDERAL PARTICIPATION

☐ PARTICIPATING ☐ PARTICIPATING IN PART ☑ NONE

☐ NON-PARTICIPATING (MAINTENANCE) ☐ NON-PARTICIPATING

FEDERAL SEGREGATION (if more than one Funding Source or P.I.P. type)

☑ CCO FUNDED PER CONTRACT ☐ CCO FUNDED AS FOLLOWS

FEDERAL FUNDING SOURCE	PERCENT

ADA Notice: For individuals with sensory disabilities, this document is available in alternate formats. For information call: (916) 654-6410 or TDD (916) 654-3880 or write Records and Forms Management, 1120 N Street, MS-89, Sacramento, CA 95814.

STATE OF CALIFORNIA - DEPARTMENT OF TRANSPORTATION

CONTRACT CHANGE ORDER

Change Requested by: Engineer

CCO: 76	Suppl. No. 1	Contract No. 04 - 0120L4	Road ALA-80-1.6/2.7	FED. AID LOC.: NO FED AID

To: **M C M CONSTRUCTION INC**

You are directed to make the following changes from the plans and specifications or do the following described work not included in the plans and specifications for this contract. ***NOTE: This change order is not effective until approved by the Engineer.***

Description of work to be done, estimate of quantities and prices to be paid. (Segregate between additional work at contract price, agreed price and force account.) Unless otherwise stated, rates for rental of equipment cover only such time as equipment is actually used and no allowance will be made for idle time. This last percentage shown is the net accumulated increase or decrease from the original quantity in the Engineer's Estimate.

TIME ADJUSTMENT:

A determination of the delay in completion of the contract due to the work specified by Contract Change Order No. 76 has been made in accordance with the provisions of Section 8-1.07 of the Standard Specifications.

Time Adjustment = 0 Days

Acceptance of this change order constitutes an agreement of full resolution of all time impact costs resulting from Change Order No. 76.

This change order acts to resolve the deferred time issued on Change Orders No. 76, and no additional time shall be granted.

Estimated Cost: Increase ☐ **Decrease** ☐ **$0.00**

By reason of this order the time of completion will be adjusted as follows: 0 days

Signature	**Resident Engineer** BEN GHAFGHAZI	**Date** 4/7/2010
Signature	**Construction Engineer** Ben Ghafghazi	**Date** 4/7/2010
Signature	**Construction Manager** Amer Bata	**Date** 7/14/10

We the undersigned contractor, have given careful consideration to the change proposed and agree, if this proposal is approved, that we will provide all equipment, furnish the materials, except as may otherwise be noted above, and perform all services necessary for the work above specified, and will accept as full payment therefor the prices shown above.

NOTE: If you, the contractor, do not sign acceptance of this order, your attention is directed to the requirements of the specifications as to proceeding with the ordered work and filing a written protest within the time therein specified.

Signature	**(Print name and title)** JAMES A. CARTER, PRESIDENT	**Date** 7/14/10

CONTRACT CHANGE ORDER

Change Requested by: Engineer

CCO 77	Suppl. No. 0	Contract No. 04 - 0120L4	Road ALA-80-1.6/2.7	FED. AID LOC.: NO FED AID

M C M CONSTRUCTION INC

You are directed to make the following changes from the plans and specifications or do the following described work not included in the plans and specifications for this contract. ***NOTE: This change order is not effective until approved by the Engineer.***

Description of work to be done, estimate of quantities and prices to be paid. (Segregate between additional work at contract price, agreed price and force account.) Unless otherwise stated, rates for rental of equipment cover only such time as equipment is actually used and no allowance will be made for idle time. This last percentage shown is the net accumulated increase or decrease from the original quantity in the Engineer's Estimate.

Extra Work at Force Account:

Construct precast wall to grades shown on sheet 2 of 4 of this CCO. Modify reinforcing for barrier slab and barrier as shown on sheets 3 of 4 and 4 of 4 of this CCO. All work shall be performed in accordance with Section 10-1.55, "Precast Wall," and Section 10-1.67,"Reinforcement," of the Special Provisions.

Estimated cost of Extra Work at Force Account $10,000.00

Estimated Cost: Increase ☑ **Decrease** ☐ **$10,000.00**

By reason of this order the time of completion will be adjusted as follows: 0 days

Submitted by		
Signature	Resident Engineer BEN GHAFGHAZI	Date 10/30/08
Approval Recommended by		
Signature	Construction Engineer Ben Ghafghazi	Date 10/30/08
Engineer Approval by		
Signature	Construction Engineer Ben Ghafghazi	Date 6/4/09

We the undersigned contractor, have given careful consideration to the change proposed and agree, if this proposal is approved, that we will provide all equipment, furnish the materials, except as may otherwise be noted above, and perform all services necessary for the work above specified, and will accept as full payment therefor the prices shown above.

NOTE: If you, the contractor, do not sign acceptance of this order, your attention is directed to the requirements of the specifications as to proceeding with the ordered work and filing a written protest within the time therein specified.

Contractor Acceptance by		
Signature	(Print name and title) EDMUNDO A. PUCHI, TREASURER	Date 6/1/09

DIST	COUNTY	ROUTE	KILOMETER POST TOTAL PROJECT	SHEET NO	TOTAL SHEETS
04	Ala	80	1.6/2.7	348R1	643

Caltrans Metric

REGISTERED CIVIL ENGINEER 11-30-06 DATE

1-29-07
PLANS APPROVAL DATE

REGISTERED PROFESSIONAL ENGINEER Ruben Quitoriano No. 54514 Exp. 12-31-07 CIVIL STATE OF CALIFORNIA

The State of California or its officers or agents shall not be responsible for the accuracy or completeness of electronic copies of this plan sheet.

Caltrans now has a web site! To get to the web site, go to: http://www.dot.ca.gov

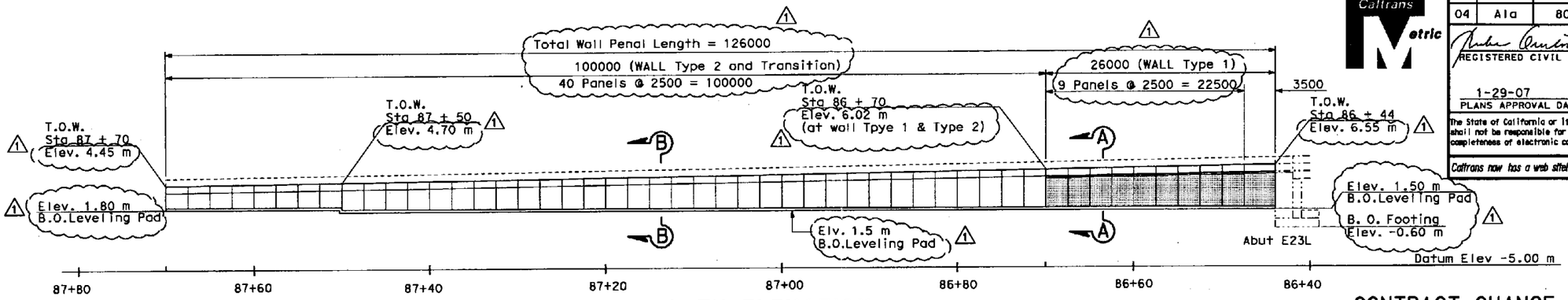

NORTH ELEVATION
1:250

CONTRACT CHANGE ORDER NO. 77
SHEET 2 OF 4 04-0120L4
10/29/08

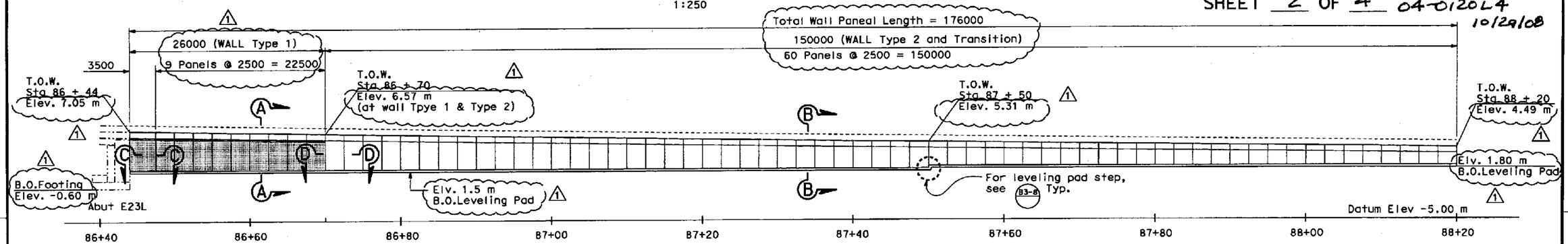

SOUTH ELEVATION
1:250

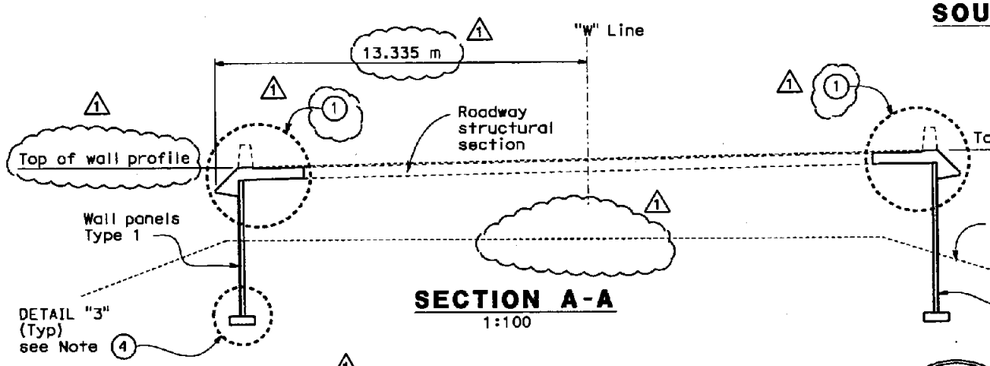

SECTION A-A
1:100

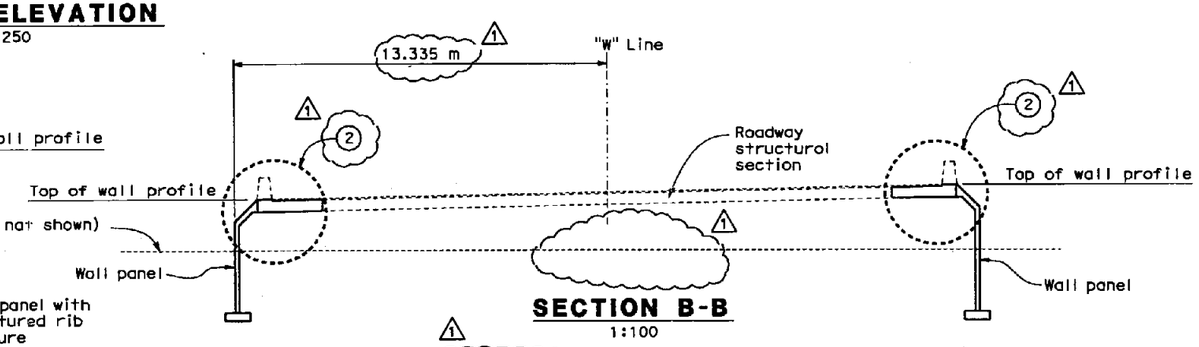

SECTION B-B
1:100

GENERAL NOTES:

1. The Contractor shall verify all controlling field dimensions before ordering or fabricating any material.
2. Concrete for barrier slabs, precast wall panels and leveling pad shall have a minimum compressive strength of 25 MPa at 28 days.
3. Reinforcing steel shall conform to ASTM A706 Grade 60.
4. Precast wall panels shall be braced as necessary for the panels to remain plumb.

REGISTERED PROFESSIONAL ENGINEER Samad Hamoud No. 51986 Exp. 09-30-08 CIVIL STATE OF CALIFORNIA

STAMP IS VALID FOR REVISION 1 ONLY

MARK	DATE		DES	CHK
1	10/27/08	WALL ELEVATIONS are Clarified	AY	AH

ALL DIMENSIONS ARE IN MILLIMETERS UNLESS OTHERWISE SHOWN

NOTES

1. Precast Wall Panels Type-1, see sheet "PRECAST WALL AND BARRIER SLAB DETAILS 2", Detail-"1".
2. Precast Wall Panels Type-2, see sheet "PRECAST WALL AND BARRIER SLAB DETAILS 2", Detail-"2".
3. Precast Wall Transition Section C-C, D-D see sheet "PRECAST WALL AND BARRIER SLAB DETAILS 3".
4. DETAIL "3", see sheet "PRECAST WALL AND BARRIER SLAB DETAILS 2".

DESIGN	A. Yazdani/B. Nou	CHECKED	S. Hamoud
DETAILS	M. Yu	CHECKED	S. Hamoud
QUANTITIES	B. Nou	CHECKED	A. Jenabzadeh

STATE OF CALIFORNIA
DEPARTMENT OF TRANSPORTATION

DIVISION OF ENGINEERING SERVICES
STRUCTURE DESIGN
DESIGN BRANCH 16

BRIDGE NO. 34-0006L/R
KILOMETER POST 1.6

OAKLAND APPROACH STRUCTURES
PRECAST WALL AND BARRIER SLAB DETAILS 1

ORIGINAL SCALE IN MILLIMETERS FOR REDUCED PLANS 0 10 20 30 40 50 60 70 80 90 100

CU 04251
EA 0120L1

DISREGARD PRINTS BEARING EARLIER REVISION DATES

REVISION DATES 8-15-05 1-24-06 4-24-06 5-24-06 6-26-06 7-24-06 11-30-06 12-29-06 10-27-08

SHEET 2R OF 13

FILE => 34-0006-w-asrdt01.dgn

STRUCTURES DESIGN DETAIL SHEET (METRIC) (REV.03-17-04)

DATE PLOTTED => 28-OCT-2008 TIME PLOTTED => 15:04

USERNAME => myu

DIST	COUNTY	ROUTE	KILOMETER POST TOTAL PROJECT	SHEET No	TOTAL SHEETS
04	Ala	80	1.6/2.7	349R1	643

REGISTERED CIVIL ENGINEER 12-12-06 DATE

PLANS APPROVAL DATE

The State of California or its officers or agents shall not be responsible for the accuracy or completeness of electronic copies of this plan sheet.

Caltrans now has a web site! To get to the web site, go to: http://www.dot.ca.gov

REGISTERED PROFESSIONAL ENGINEER Samad Hamoud No. 51986 Exp. 09-30-08 CIVIL STATE OF CALIFORNIA

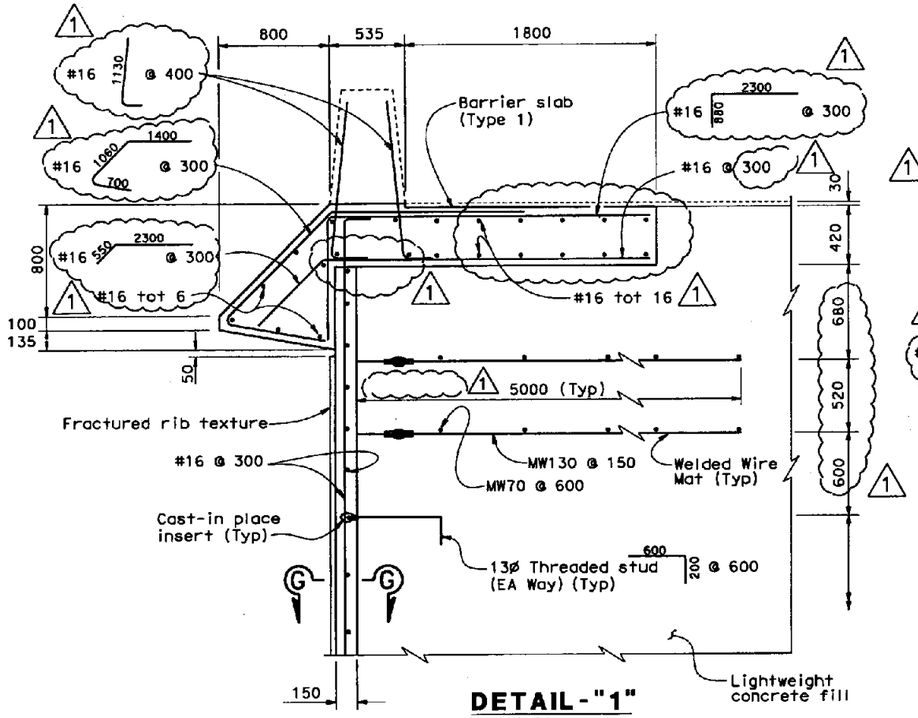

DETAIL-"1"
1:20

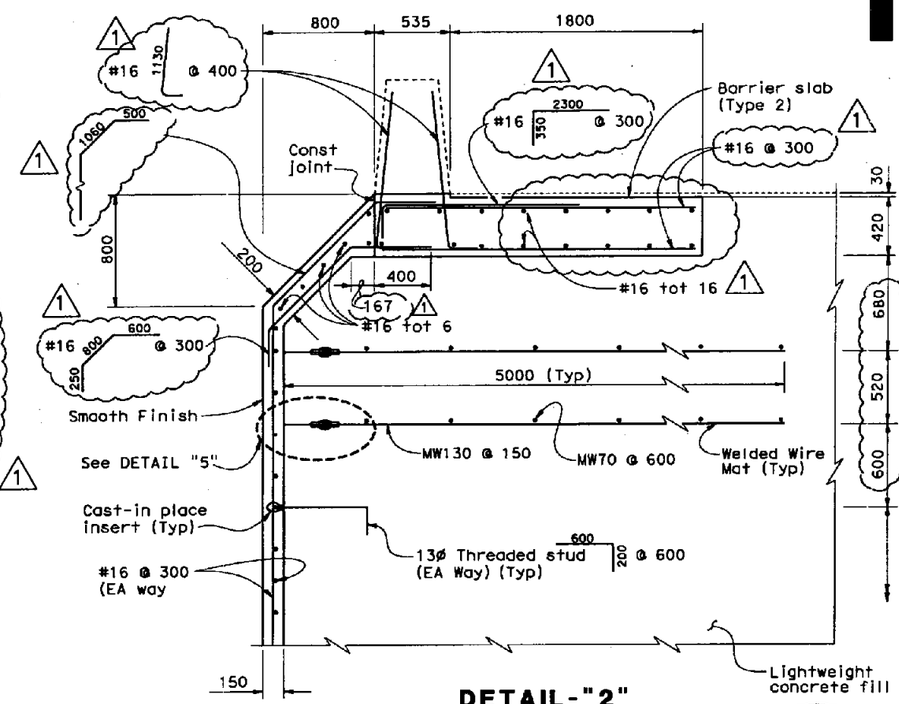

DETAIL-"2"
1:20

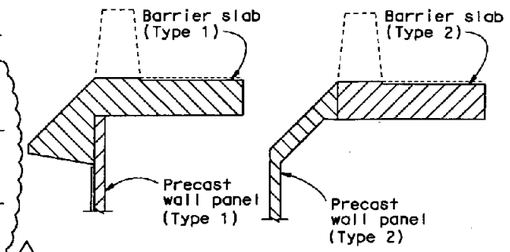

LIMITS OF WALL PANELS AND BARRIER SLABS
NO SCALE

Note: Min. wall panel width = 1220
Max. wall panel width = 3660

STAMP IS VALID FOR REVISION 1 ONLY

MARK	DATE		DES	CHK
1	10/27/08	WALL Reinforcements and Details are Clarified	AT	AH

CONTRACT CHANGE ORDER NO. 77
SHEET 3 OF 4 04-0120L4
10/29/08

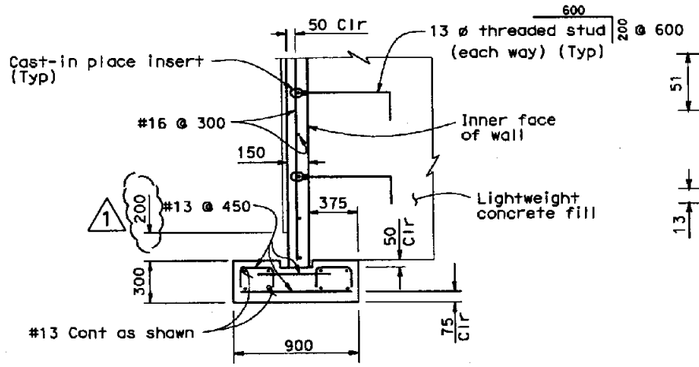

DETAIL-3
1:20

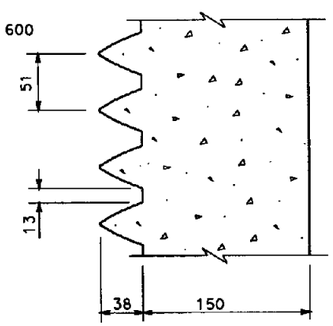

FRACTURED RIB TEXTURE

SECTION G-G
1:2.5

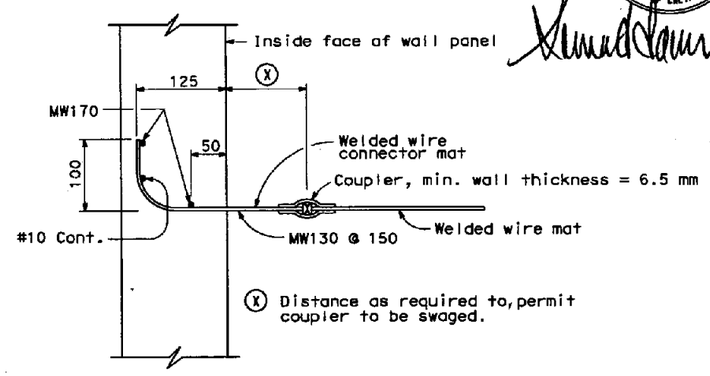

DETAIL-5
NO SCALE

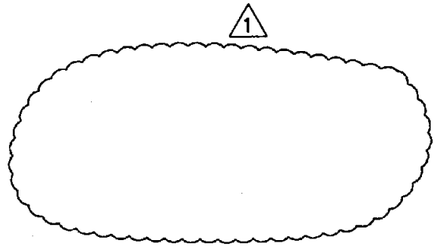

ALL DIMENSIONS ARE IN MILLIMETERS UNLESS OTHERWISE SHOWN

	BY	CHECKED
DESIGN	A. Yazdani/B. Nou	S. Hamoud
DETAILS	M.Yu / L. Ma	S. Hamoud
QUANTITIES	B. Nou	A. Jenabzadeh

STATE OF CALIFORNIA
DEPARTMENT OF TRANSPORTATION

DIVISION OF ENGINEERING SERVICES
STRUCTURE DESIGN
DESIGN BRANCH 16

BRIDGE NO. 34-0006L/R
KILOMETER POST 1.6

OAKLAND APPROACH STRUCTURES
PRECAST WALL AND BARRIER SLAB DETAILS 2

ORIGINAL SCALE IN MILLIMETERS FOR REDUCED PLANS 0 10 20 30 40 50 60 70 80 90 100

CU 04251
EA 0120L1

FILE => 34-0006-w-asrdt02.dgn

DISREGARD PRINTS BEARING EARLIER REVISION DATES

REVISION DATES: 6-13-05 1-24-06 5-31-06 6-30-06 7-24-06 12-26-06 10-27-08

SHEET 3R OF 13

STRUCTURES DESIGN DETAIL SHEET (METRIC) (REV.03-17-04)

USERNAME => myu DATE PLOTTED => 28-OCT-2008 TIME PLOTTED => 15:04

DIST	COUNTY	ROUTE	KILOMETER POST TOTAL PROJECT	SHEET No	TOTAL SHEETS
04	Ala	80	1.6/2.7	350R1	643

REGISTERED CIVIL ENGINEER 12-12-06 DATE

PLANS APPROVAL DATE

The State of California or its officers or agents shall not be responsible for the accuracy or completeness of electronic copies of this plan sheet.

Caltrans now has a web site! To get to the web site, go to: http://www.dot.ca.gov

REGISTERED PROFESSIONAL ENGINEER Samad Hamoud No. 51986 Exp. 09-30-08 CIVIL STATE OF CALIFORNIA

Notes:
1. Provide welded wire mat and studs as shown on "DETAIL 2", "PRECAST WALL AND BARRIER SLAB DETAILS-2" sheet.
2. Provide leveling pad as shown on "DETAILS-3", "PRECAST WALL AND BARRIER DETAILS-2" sheet.

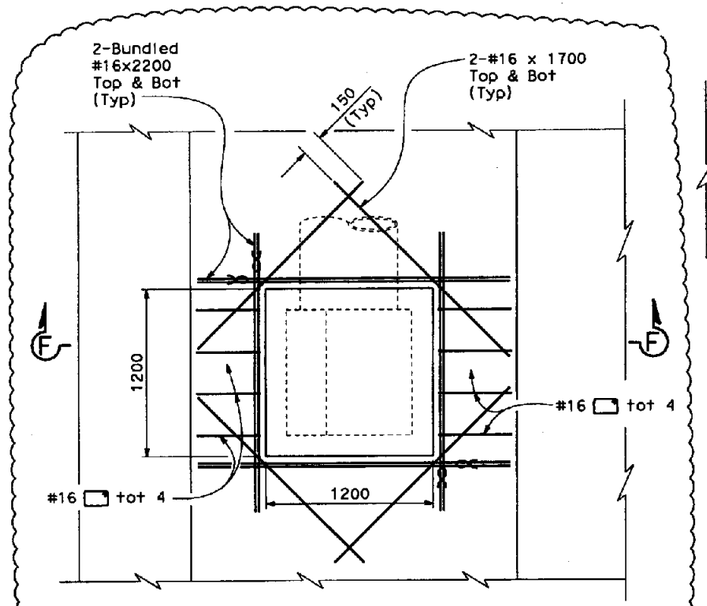

1200 x 1200 SLAB OPENING DETAILS
(Additional Reinforcement)
1:20

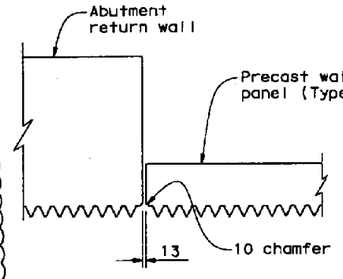

SECTION C-C
1:10

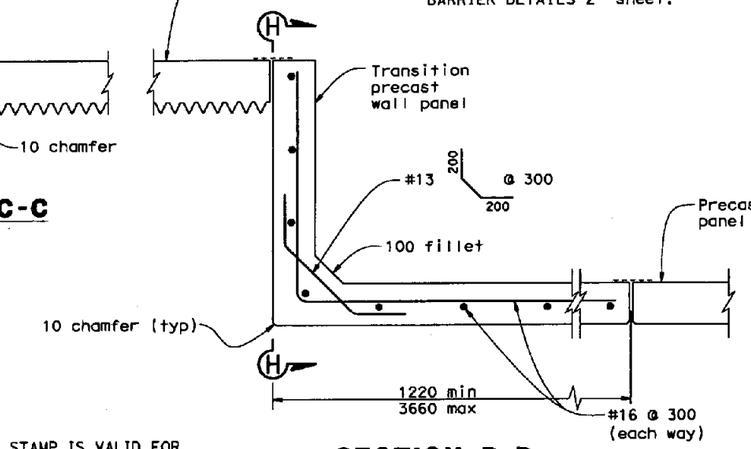

SECTION D-D
1:10

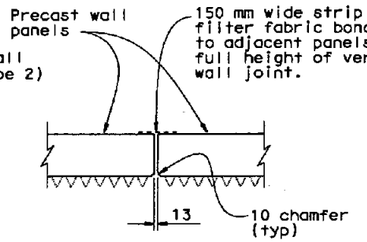

TYP. JOINT DETAIL
1:10

STAMP IS VALID FOR REVISION 1 ONLY

REGISTERED PROFESSIONAL ENGINEER Samad Hamoud No. 51986 Exp. 09-30-08 CIVIL STATE OF CALIFORNIA

MARK	DATE		DES	CHK
1	10/27/08	SLAB Opening and Details are Clarified	AY	

CONTRACT CHANGE ORDER NO. 77
SHEET 4 OF 4 04-0120L4 10/29/08

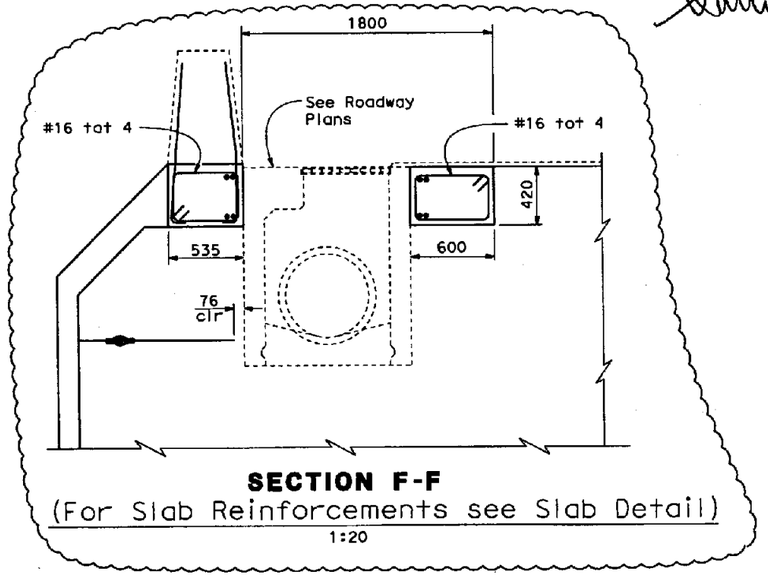

SECTION F-F
(For Slab Reinforcements see Slab Detail)
1:20

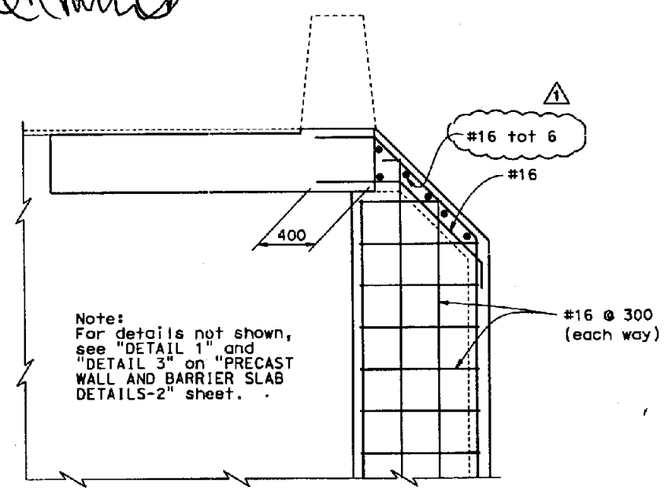

Note:
For details not shown, see "DETAIL 1" and "DETAIL 3" on "PRECAST WALL AND BARRIER SLAB DETAILS-2" sheet.

SECTION H-H
1:20

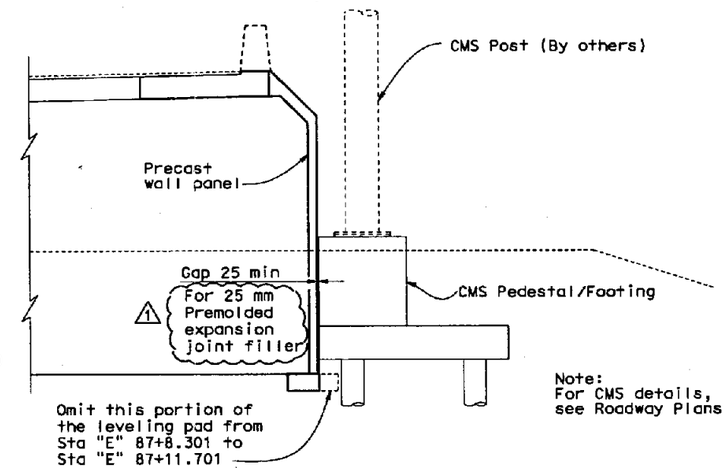

Note:
For CMS details, see Roadway Plans

CMS AT EB DTR
1:50

ALL DIMENSIONS ARE IN MILLIMETERS UNLESS OTHERWISE SHOWN

	BY	CHECKED
DESIGN	A. Yazdani/B. Nou	S. Hamoud
DETAILS	M.Yu / L. Ma	S. Hamoud
QUANTITIES	B. Nou	A. Jenabzadeh

STATE OF CALIFORNIA
DEPARTMENT OF TRANSPORTATION

DIVISION OF ENGINEERING SERVICES
STRUCTURE DESIGN
DESIGN BRANCH 16

BRIDGE NO. 34-0006L/R
KILOMETER POST 1.6

OAKLAND APPROACH STRUCTURES
PRECAST WALL AND BARRIER SLAB DETAILS 3

CU 04251
EA 0120L1

ORIGINAL SCALE IN MILLIMETERS FOR REDUCED PLANS 0 10 20 30 40 50 60 70 80 90 100

DISREGARD PRINTS BEARING EARLIER REVISION DATES

REVISION DATES: 4-13-06 5-12-06 5-19-06 5-24-06 7-24-06 1-29-08 12-12-08 10-27-08

SHEET 4R OF 13

FILE => 34-0006-w-asrdt03.dgn

STRUCTURES DESIGN DETAIL SHEET (METRIC) (REV.03-17-04)

USERNAME => myu DATE PLOTTED => 28-OCT-2008 TIME PLOTTED => 15:05

STATE OF CALIFORNIA - DEPARTMENT OF TRANSPORTATION

CONTRACT CHANGE ORDER MEMORANDUM

TO: AMER BATA / BEN GHAFGHAZI	FILE: E.A. 04 - 0120L4
FROM: BEN GHAFGHAZI	CO-RTE-PM ALA-80-1.6/2.7
	FED. NO. NO FED AID
CCO#: 77 SUPPLEMENT#: 0 Category Code: CMPX	CONTINGENCY BALANCE (incl. this change) $13,677,204.20
COST: $10,000.00 INCREASE ☑ DECREASE ☐	HEADQUARTERS APPROVAL REQUIRED? ☐ YES ☑ NO
SUPPLEMENTAL FUNDS PROVIDED: $0.00	IS THIS REQUEST IN ACCORDANCE WITH ENVIRONMENTAL DOCUMENTS? ☑ YES ☐ NO
CCO DESCRIPTION: Modify precast wall, barrier slab detail	**PROJECT DESCRIPTION:** Construct bridge, roadway, building and electrical system.

Original Contract Time:	Time Adj. This Change:	Previously Approved CCO Time Adjustments:	Percentage Time Adjusted: (including this change)	Total # of Unreconciled Deferred Time CCO(s): (including this change)
810 Day(s)	0 Day(s)	2 Day(s)	0 %	6

THIS CHANGE ORDER PROVIDES FOR:

Constructing precast wall to grades shown on sheet 2 of 4 of the CCO. Modifying reinforcing for barrier slab and barrier as shown on sheets 3 of 4 and 4 of 4 of this CCO.

This change was requested by Samad Hamoud, Oakland Bridge Design Branch Chief. This change is necessary because Structures Design determined that the pre-cast wall drawings in the contract plans were incorrect and had several details that needed to be changed and dimensions added.

This work will be paid as Extra Work at Force Account for $10,000.00, which can be financed from the contingency fund.

This change has been discussed and concurred with Lina Ellis of Structures Maintenance.

No adjustment of contract time is warranted since this change does not affect the controlling operation.

CONCURRED BY:		
Construction Engineer:	Ben Ghafghazi	Date 10/30/08
Bridge Engineer:	Mehran Ardakanian	Date 10/30/08
Project Engineer:	Samad Hamoud, Structures Desig	Date 10/27/08
Project Manager:		Date
FHWA Rep.:		Date
Environmental:		Date
Other (specify):	Lina Ellis, Structures Maint.	Date 10/30/08
Other (specify):		Date
District Prior Approval By:		Date
HQ (Issue Approve) By:		Date
Resident Engineer's Signature:		Date 10/30/08

ESTIMATE OF COST

	THIS REQUEST	TOTAL TO DATE
ITEMS	$0.00	$0.00
FORCE ACCOUNT	$10,000.00	$10,000.00
AGREED PRICE	$0.00	$0.00
ADJUSTMENT	$0.00	$0.00
TOTAL	$10,000.00	$10,000.00

FEDERAL PARTICIPATION

☐ PARTICIPATING ☐ PARTICIPATING IN PART ☑ NONE
☐ NON-PARTICIPATING (MAINTENANCE) ☐ NON-PARTICIPATING

FEDERAL SEGREGATION (if more than one Funding Source or P.I.P. type)
☑ CCO FUNDED PER CONTRACT ☐ CCO FUNDED AS FOLLOWS

FEDERAL FUNDING SOURCE	PERCENT

ADA Notice: For individuals with sensory disabilities, this document is available in alternate formats. For information call: (916) 654-6410 or TDD (916) 654-3880 or write Records and Forms Management, 1120 N Street, MS-89, Sacramento, CA 95814.

CONTRACT CHANGE ORDER

Change Requested by: Engineer

CCO 78	Suppl. No. 0	Contract No. 04 - 0120L4	Road ALA-80-1.6/2.7	FED. AID LOC.: NO FED AID

To: **M C M CONSTRUCTION INC**

You are directed to make the following changes from the plans and specifications or do the following described work not included in the plans and specifications for this contract. ***NOTE: This change order is not effective until approved by the Engineer.***

Description of work to be done, estimate of quantities and prices to be paid. (Segregate between additional work at contract price, agreed price and force account.) Unless otherwise stated, rates for rental of equipment cover only such time as equipment is actually used and no allowance will be made for idle time. This last percentage shown is the net accumulated increase or decrease from the original quantity in the Engineer's Estimate.

Provide labor, materials, and equipment as necessary to modify blockouts, access openings, and drainage inlet for Frames 1 and 2 of Bridge No. 34-0006L as shown on sheets 2 of 6 through 6 of 6 of this CCO.

Extra Work at Force Account:

Replace the embedded electrical conduits with embedded sleeves and blockout openings. Modify reinforcing steel around the sleeves and build formwork to accommodate the added blockouts. Provide two 200 mm x 1000 mm blockout openings for the electrical conduits at Girder H between Bent E20L and the first intermediate diaphragm at Bent E21L. Revise access openings. Relocate drain inlet adjacent to Pier E17L to East side of Pier E17L. Revise girder blockouts for the 150 mm and 300 mm water lines on east side of Pier E22L. All work shall be in accordance with Sections 10-1.53, Concrete Structures," 10-1.67, "Reinforcement," and 10-1.92, "Miscellaneous Metal (Bridge)," of the Special Provisions.

Estimated cost of Extra Work at Force Account $250,000.00

Consideration of a time adjustment will be deferred until completion of the work specified herein. Determination of a commensurate time extension will be made in accordance with Section 10-1.14, "Progress Schedule (Critical Path Method)," of the Special Provisions and Section 8-1.07, "Liquidated Damages," of the Standard Specifications.

Estimated Cost: Increase ☑ **Decrease** ☐ **$250,000.00**

By reason of this order the time of completion will be adjusted as follows: Deferred

Submitted by

Signature	Resident Engineer	Date
William Howe	FOR BEN GHAFGHAZI	2·20·09

Approval Recommended by

Signature	Construction Manager	Date
	Amer Bata	2/20/09

Engineer Approval by

Signature	Construction Manager	Date
	Amer Bata	4/30/09

We the undersigned contractor, have given careful consideration to the change proposed and agree, if this proposal is approved, that we will provide all equipment, furnish the materials, except as may otherwise be noted above, and perform all services necessary for the work above specified, and will accept as full payment therefor the prices shown above.

NOTE: If you, the contractor, do not sign acceptance of this order, your attention is directed to the requirements of the specifications as to proceeding with the ordered work and filing a written protest within the time therein specified.

Contractor Acceptance by

Signature	(Print name and title)	Date
	EDMUNDO A. TUCHI, TREASURER	4/28/09

Notes:
1. For girders (A) (B) (K) & (L) see "Westbound Girder Layout No. 2" sheet.
2. For Frame 2, see "Westbound Girder Layout No. 3" sheet.
3. Soffit varies linearly @ constant rate change from Hinge EW to Hinge FW.
4. For intermediate diophragm, see "Westbound Girder Details" sheet.
5. For "Camber Diagram", see "Westbound Camber Diagrams" sheet.
6. For Deck & Soffit slab thickness not shown, see "Westbound Typical Section No. 1" sheet.
7. For Prestressing Notes see "Westbound Girder Layout No. 2" sheet.
8. Intermediate diaphragms to be placed radially. Dimensions shown are measured along ℄ WB Route 80.
9. For Service platform details, see "Service Platforms, Utility Vaults and Precast Wall General Plan 1" sheet.
10. For access openings, see "Westbound Girder Layout No. 1A and 3A" sheets.
11. For electrical conduit layout and pipe supports, loop detector details, see "Roadway Plans".
12. For mechanical layout and pipe supports details not shown, see "Roadway Plans".
13. For Utilities designation (A), see "WB Typ Section No. 1" sheet.
14. Girder opening locations are shown on "Westbound Girder Layout No. 1A and 3A" sheets.
15. The preformed loop detector will be cast with the deck and pull box will be provided as stated on preformed loop schedule as shown on "Roadway Plans".
16. See "Detail 2" on "Westbound Hinge EW Detail No. 5" sheet for additional hair pin reinf around duct.

Caltrans Metric

DIST	COUNTY	ROUTE	KILOMETER POST TOTAL PROJECT	SHEET NO.	TOTAL SHEETS
04	Ala	80	1.6/2.7	205R1	643

Adam Wang
REGISTERED ENGINEER - CIVIL
1-29-07
PLANS APPROVAL DATE
REGISTERED PROFESSIONAL ENGINEER ADAM TM WANG No. 40402 Exp. 3-31-2007 CIVIL STATE OF CALIFORNIA

The State of California or its officers or agents shall not be responsible for the accuracy or completeness of electronic copies of this plan sheet.

T.Y. LIN / MOFFATT & NICHOL
TWO HARRISON STREET, SUITE 500
SAN FRANCISCO, CA 94105

W. KOO & ASSOCIATES, INC
625 THE CITY DRIVE SOUTH, SUITE 200
ORANGE, CA 92868

To get to the Caltrans web site go to: http://www.dot.ca.gov

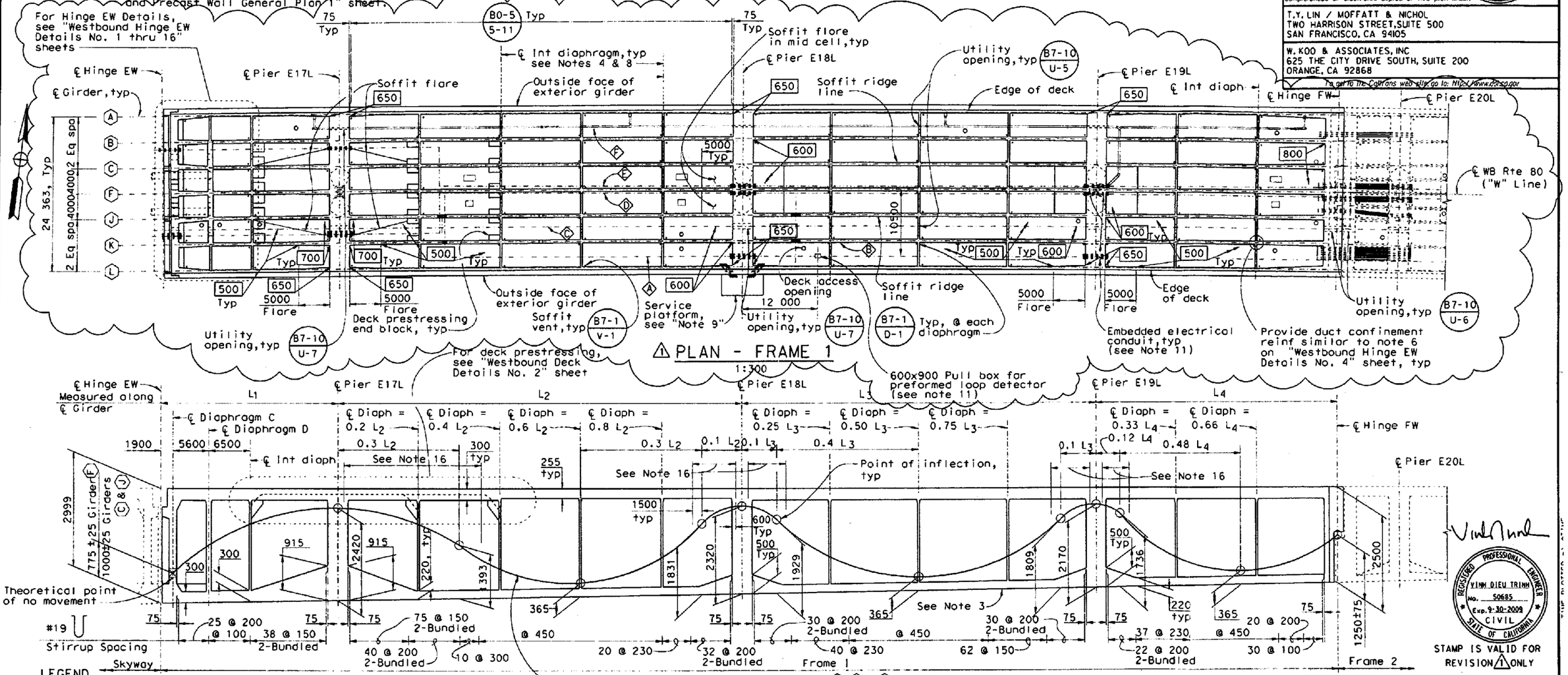

LEGEND
- Indicates girder stem width in millimeters, see (B7-1 / S-3)
- (A) Indicates girder designation
- 0.5 L_1 Indicates the fraction of each girder length in the span noted by the subscript
- Denotes embedded conduits

Note:
The Contractor shall verify all controlling field dimensions before ordering or fabricating any material

⚠1 PLAN - FRAME 1
1:300

LONGITUDINAL SECTION - FRAME 1
No Scale

ALL DIMENSIONS ARE IN MILLIMETERS UNLESS OTHERWISE SHOWN

CONTRACT CHANGE ORDER NO. 78
SHEET 2 OF 6 04-0120L4
1/21/09

MARK	DATE	DESCRIPTIONS	BY	CH'D	CCO#
1	11/03/08	REVISED ACCESS OPENING LOCATIONS AND EXTERIOR GIRDER FLARES	VT	YJS	

REVISIONS

STAMP IS VALID FOR REVISION ⚠1 ONLY

SAN FRANCISCO OAKLAND BAY BRIDGE
EAST SPAN SEISMIC SAFETY PROJECT

OAKLAND APPROACH STRUCTURES-PHASE 1

WESTBOUND GIRDER LAYOUT NO. 1

DESIGN OVERSIGHT
SAM AKKAD FRANCISCO CARPIO BERNARD CHAN HASAN EL-NATUR
SIGN OFF DATE 1/27/2009

DESIGN	BY K. Russell	CHECKED A. Mouboyed
DETAILS	BY G. Buelow	CHECKED A. Mouboyed
QUANTITIES	BY K. Russell	CHECKED H. Haroun

PREPARED FOR THE STATE OF CALIFORNIA DEPARTMENT OF TRANSPORTATION

Adam Wang
PROJECT ENGINEER

BRIDGE NO. 34-0006L/R
KILOMETER POST 1.6

CU 04
EA 0120L1

DISREGARD PRINTS BEARING EARLIER REVISION DATES

REVISION DATES (PRELIMINARY STAGE ONLY) 10/20/03 8/28/04 12/29/04 2/28/05 6/24/05 11/24/05 1/31/06 4/27/06 7/24/06 11/13/06

SHEET 92 OF 224

Rev. Date: 5-8-98

ORIGINAL SCALE IN MILLIMETERS FOR REDUCED PLANS 0 10 20 30 40 50 60 70 80 90 100

DIST	COUNTY	ROUTE	KILOMETER POST TOTAL PROJECT	SHEET NO.	TOTAL SHEETS
04	Ala	80	1.6/2.7	205S2	643

REGISTERED ENGINEER - CIVIL

01-19-09
PLANS APPROVAL DATE

REGISTERED PROFESSIONAL ENGINEER VINH DIEU TRINH No. 50685 Exp. 9-30-2009 CIVIL STATE OF CALIFORNIA

The State of California or its officers or agents shall not be responsible for the accuracy or completeness of electronic copies of this plan sheet.

T.Y. LIN / MOFFATT & NICHOL
TWO HARRISON STREET, SUITE 500
SAN FRANCISCO, CA 94105

W. KOO & ASSOCIATES, INC
625 THE CITY DRIVE SOUTH, SUITE 200
ORANGE, CA 92868

To get to the Caltrans web site, go to: http://www.dot.ca.gov

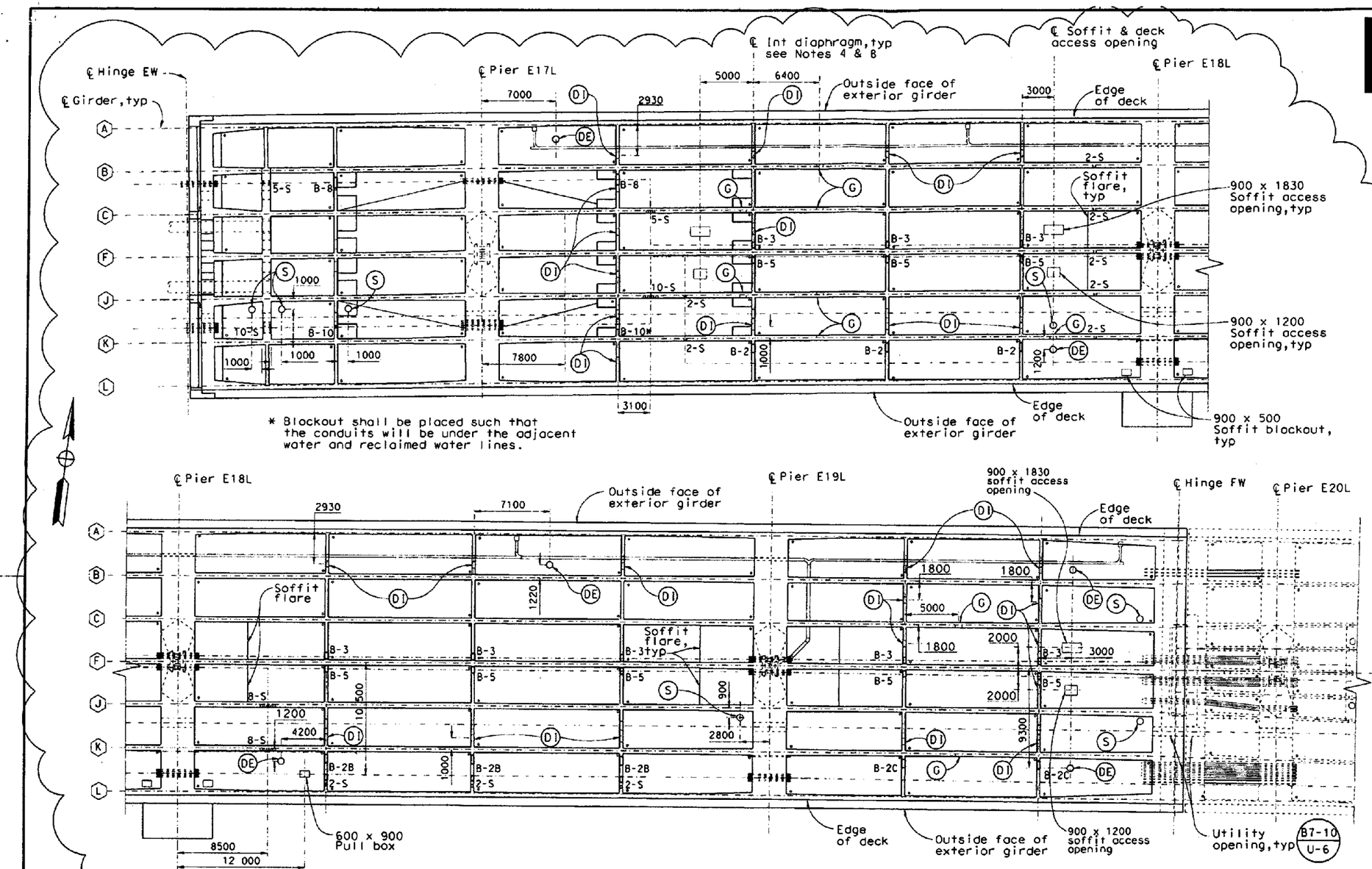

LEGEND

- Indicates girder stem width in millimeters, see B7-1 / S-3
- (A) Indicates girder designation
- Denotes embedded conduits/pipe sleeves
- (DI) Indicates 610 mm Ø diaphragm access opening B7-10 / U-5
- (G) Indicates 600 mm Ø girder access opening B7-11 / U-41
- (S) Indicates 610 mm Ø grated soffit access opening
- (DE) Indicates 600 mm Ø deck access opening. See "Miscellaneous Details No. 2" sheet.
- xx-S xx-150 mm Pipe sleeves

BLOCK-OUT TYPE	SIZE
TYPE B-2	400 × 400
TYPE B-2A	800 × 200, 500 × 200
TYPE B-2B	1000 × 400, 150 pipe sleeve
TYPE B-2C	1400 × 400
TYPE B-3	600 × 430
TYPE B-5	600 × 660
TYPE B-8	1000 × 400
TYPE B-10	1000 × 430

ACCESS OPENINGS & ELECTRICAL BLOCKOUTS
PLAN - FRAME 1
1:200

SUPPLEMENTAL SHEET
CONTRACT CHANGE ORDER NO. 78
SHEET 3 OF 6 04-0120L4
1/20/09

Note:
The Contractor shall verify all controlling field dimensions before ordering or fabricating any material

ALL DIMENSIONS ARE IN MILLIMETERS UNLESS OTHERWISE SHOWN

SAN FRANCISCO OAKLAND BAY BRIDGE
EAST SPAN SEISMIC SAFETY PROJECT

OAKLAND APPROACH STRUCTURES-PHASE 1

WESTBOUND GIRDER LAYOUT NO. 1A

DESIGN OVERSIGHT: BERNARD CHAN, HASAN EL-NATUR
SIGN OFF DATE: 1/27/2009

	BY	CHECKED
DESIGN	K. Russell	A. Mouboyed
DETAILS	G. Buelaw	A. Mouboyed
QUANTITIES	K. Russell	H. Haroun

PREPARED FOR THE STATE OF CALIFORNIA DEPARTMENT OF TRANSPORTATION

Adam Wang
PROJECT ENGINEER

CU 04
EA 0120L1

BRIDGE NO. 34-0006L/R
KILOMETER POST 1.6

DISREGARD PRINTS BEARING EARLIER REVISION DATES

REVISION DATES (PRELIMINARY STAGE ONLY): 11/20/08 12/15/08 12/19/08 12/22/08 01/19/09

SHEET 9252 OF 224

Rev. Date: 5-18-98

ORIGINAL SCALE IN MILLIMETERS FOR REDUCED PLANS 0 10 20 30 40 50 60 70 80 90 100

To get to the Caltrans web site, go to: http://www.dot.ca.gov

DIST	COUNTY	ROUTE	KILOMETER POST TOTAL PROJECT	SHEET NO.	TOTAL SHEETS
04	Ala	80	1.6/2.7	207R2	643

Adam Wang
REGISTERED ENGINEER - CIVIL
1-29-07
PLANS APPROVAL DATE

REGISTERED PROFESSIONAL ENGINEER ADAM TW WANG No. 40402 Exp. 3-31-2007 CIVIL STATE OF CALIFORNIA

The State of California or its officers or agents shall not be responsible for the accuracy or completeness of electronic copies of this plan sheet.

T.Y. LIN / MOFFATT & NICHOL
TWO HARRISON STREET, SUITE 500
SAN FRANCISCO, CA 94105

W. KOO & ASSOCIATES, INC
625 THE CITY DRIVE SOUTH, SUITE 200
ORANGE, CA 92868

Caltrans Metric

REGISTERED PROFESSIONAL ENGINEER VINH DIEU TRINH No. 50685 Exp. 9-30-2009 CIVIL STATE OF CALIFORNIA

STAMP IS VALID FOR REVISION 1 ONLY

CONTRACT CHANGE ORDER NO. 78
SHEET 4 OF 6 04-0120L4
1/20/09

MARK	DATE	DESCRIPTIONS	BY	CH'D	CCO#
1	8/14/08	UTILITY OPENING CLARIFIED	VT	YJS	
2	11/03/08	REVISED ACCESS OPENING LOCATIONS AND EXTERIOR GIRDER FLARES	VT	YJS	

REVISIONS

LEGEND

- Indicates girder stem width in millimeters, see B7-1 / S-3
- (A) Indicates girder designation
- 0.5 L_1 Indicates the fraction of each girder length in the span noted by the subscript
- Denotes embedded conduits

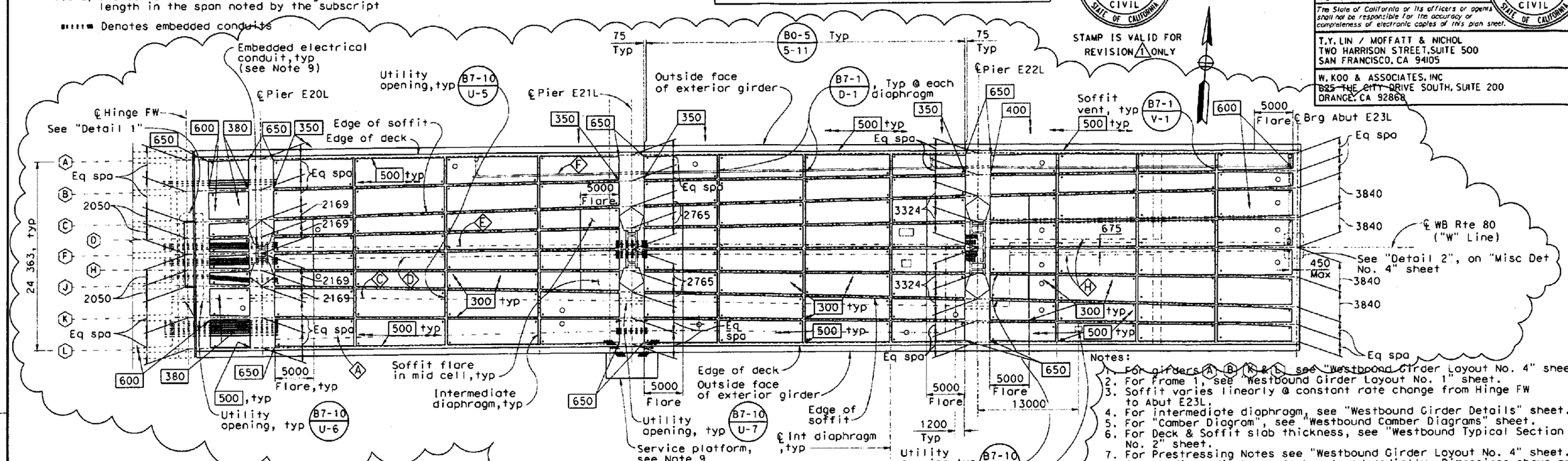

Notes:

1. For girders (A) (B) (K) & (L) see "Westbound Girder Layout No. 4" sheet.
2. For Frame 1, see "Westbound Girder Layout No. 1" sheet.
3. Soffit varies linearly @ constant rate change from Hinge FW to Abut E23L.
4. For intermediate diaphragm, see "Westbound Girder Details" sheet.
5. For "Camber Diagram", see "Westbound Camber Diagrams" sheet.
6. For Deck & Soffit slab thickness, see "Westbound Typical Section No. 2" sheet.
7. For Prestressing Notes see "Westbound Girder Layout No. 4" sheet.
8. Intermediate diaphragm to be placed radially. Dimensions shown are measured along ℄ WB Route 80.
9. For utility information & pipe supports not shown, see "Notes 9-15" on "Westbound Girder Layout No. 1" sheet.

PLAN - FRAME 2

1:250

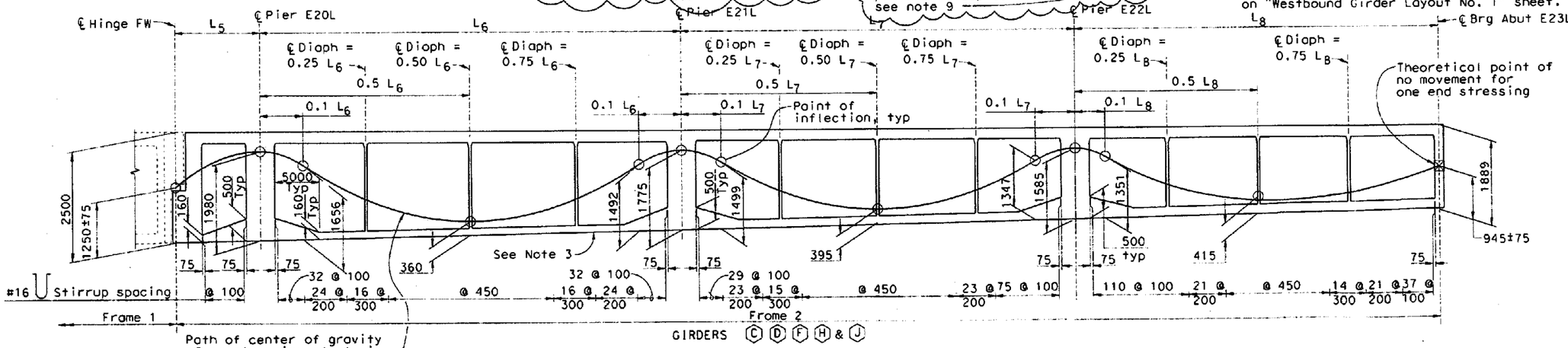

LONGITUDINAL SECTION - FRAME 2

No Scale

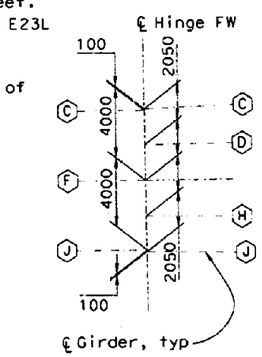

DETAIL 1

No Scale

ALL DIMENSIONS ARE IN MILLIMETERS UNLESS OTHERWISE SHOWN

SAN FRANCISCO OAKLAND BAY BRIDGE
EAST SPAN SEISMIC SAFETY PROJECT

OAKLAND APPROACH STRUCTURES-PHASE 1

WESTBOUND GIRDER LAYOUT NO. 3

DESIGN OVERSIGHT: SAM AKKAD, FRANCISCO CARPIO, BERNARD CHAN, HASAN EL-NATUR
SIGN OFF DATE: 1/27/2009

	BY	CHECKED
DESIGN	K. Russell	A. Moubayed
DETAILS	G. Buelow	A. Moubayed
QUANTITIES	O. Jarodat	H. Haroun

PREPARED FOR THE STATE OF CALIFORNIA DEPARTMENT OF TRANSPORTATION

Adam Wang
PROJECT ENGINEER

BRIDGE NO. 34-0006L/R
KILOMETER POST 1.6

CU 04
EA 0120L1

DISREGARD PRINTS BEARING EARLIER REVISION DATES

REVISION DATES (PRELIMINARY STAGE ONLY)

SHEET 94 OF 224

Rev. Date: 5-8-98

ORIGINAL SCALE IN MILLIMETERS FOR REDUCED PLANS 0 10 20 30 40 50 60 70 80 90 100

To get to the Caltrans web site, go to: http://www.dot.ca.gov

DIST	COUNTY	ROUTE	KILOMETER POST TOTAL PROJECT	SHEET NO.	TOTAL SHEETS
04	Ala	80	1.6/2.7	207S2	643

Caltrans Metric

REGISTERED ENGINEER - CIVIL

01-19-09
PLANS APPROVAL DATE

REGISTERED PROFESSIONAL ENGINEER VINH DIEU TRINH No. 50685 Exp. 9-30-2009 CIVIL STATE OF CALIFORNIA

The State of California or its officers or agents shall not be responsible for the accuracy or completeness of electronic copies of this plan sheet.

T.Y. LIN / MOFFATT & NICHOL
TWO HARRISON STREET, SUITE 500
SAN FRANCISCO, CA 94105

W. KOO & ASSOCIATES, INC
625 THE CITY DRIVE SOUTH, SUITE 200
ORANGE, CA 92868

LEGEND

- Indicates girder stem width in millimeters, see B7-1 / S-3
- (A) Indicates girder designation
- Denotes embedded conduits/pipe sleeves
- xx-S xx-150 mm Pipe sleeves
- (DI) Indicates 610 mm Ø diaphragm access opening B7-10 / U-5
- (G) Indicates 600 mm Ø girder access opening B7-11 / U-41
- (S) Indicates 610 mm Ø grated soffit access opening
- (DE) Indicates 600 mm Ø deck access opening, see "Miscellaneous Details No. 2" sheet.

BLOCK-OUT TYPE	SIZE
TYPE B-12A	1000 × 200; 700 × 200
TYPE B-12B**	1600 × 200; 1000 × 200
TYPE B-13	200 ⌀ 100
TYPE B-14	600 × 200
TYPE B-16**	1600 × 400
TYPE B-17	500 × 200
TYPE B-18*	1000 × 200; 1000 × 200

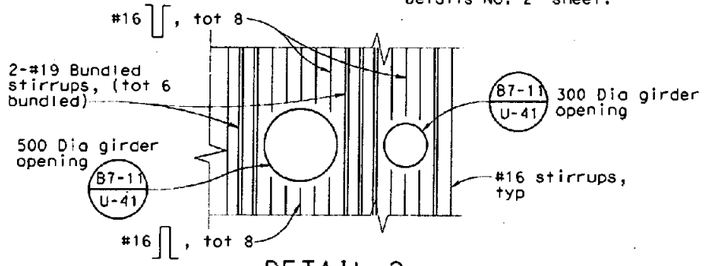

DETAIL 2
1:20

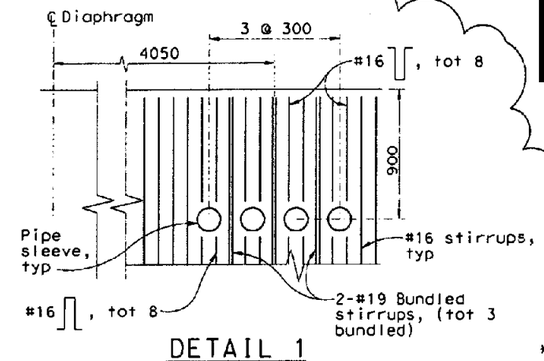

DETAIL 1
1:20

* See "Girder H Electrical Blockout Detail" on "Westbound Girder Details No. 2" sheet for additional girder reinforcement.

** For diaphragm blockout wider than 1000mm see "Diaphragm Electrical Blockout Detail" on "Westbound Girder Details No. 2" sheet.

*** See "Girder Access Opening Detail Between Pier E17L and First Diaphragm" on "Westbound Girder Details No. 2" sheet for additional girder reinforcement.

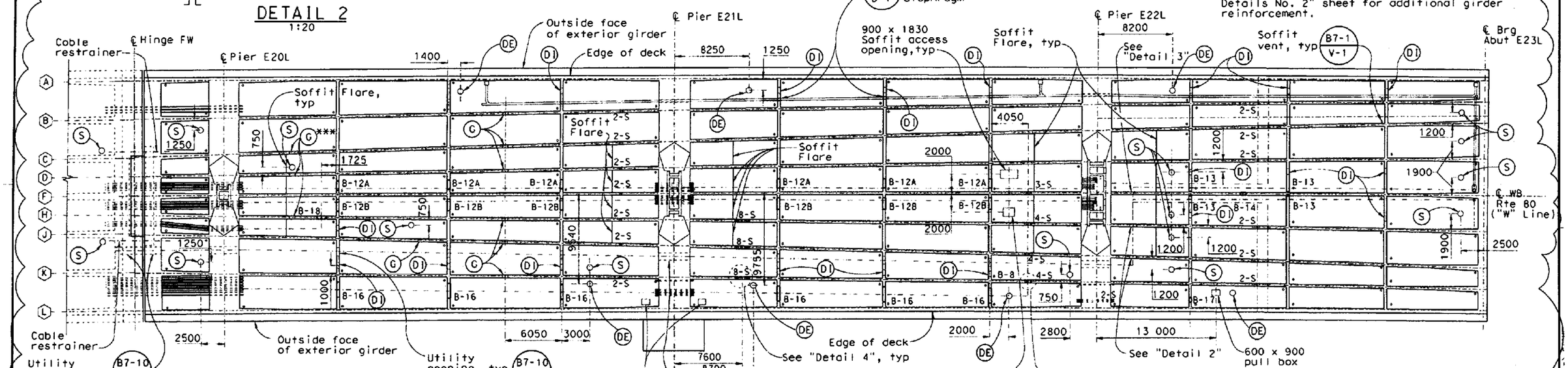

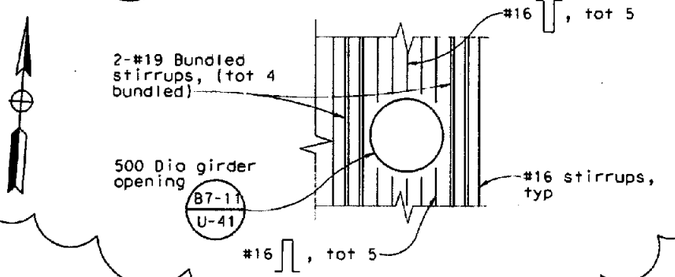

DETAIL 3
1:20

ACCESS OPENINGS & ELECTRICAL BLOCKOUTS
PLAN - FRAME 2
1:200

SUPPLEMENTAL SHEET
CONTRACT CHANGE ORDER NO. 78
SHEET 5 OF 6 04-0120L4
1/20/09

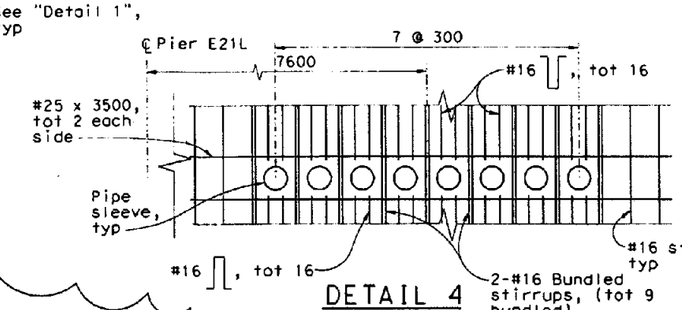

DETAIL 4
1:20

ALL DIMENSIONS ARE IN MILLIMETERS UNLESS OTHERWISE SHOWN

SAN FRANCISCO ~~OAKLAND BAY BRIDGE~~
EAST SPAN SEISMIC SAFETY PROJECT

OAKLAND APPROACH STRUCTURES-PHASE 1

WESTBOUND GIRDER LAYOUT NO. 3A

DESIGN OVERSIGHT
BERNARD CHAN — HASAN EL-NATUR
SIGN OFF DATE 1/27/2009

	BY	CHECKED
DESIGN	K. Russell	A. Moubayed
DETAILS	G. Buelow	A. Moubayed
QUANTITIES	O. Joradat	H. Haroun

PREPARED FOR THE STATE OF CALIFORNIA DEPARTMENT OF TRANSPORTATION

Adam Wang
PROJECT ENGINEER

BRIDGE NO. 34-0006L/R
KILOMETER POST 1.6

CU 04
EA 0120L1

DISREGARD PRINTS BEARING EARLIER REVISION DATES

REVISION DATES (PRELIMINARY STAGE ONLY) 12/19/08 12/19/08 12/19/08 12/19/08 01/19/09

SHEET 94S2 OF 224

ORIGINAL SCALE IN MILLIMETERS FOR REDUCED PLANS 0 10 20 30 40 50 60 70 80 90 100

Rev. Date: 5-18-98

STATE OF CALIFORNIA - DEPARTMENT OF TRANSPORTATION

CONTRACT CHANGE ORDER MEMORANDUM

DATE: 1/23/2009 Page 1 of 1

TO: AMER BATA / BEN GHAFGHAZI	FILE: E.A. 04 - 0120L4
FROM: BEN GHAFGHAZI	CO-RTE-PM ALA-80-1.6/2.7
	FED. NO. NO FED AID
CCO#: 78 SUPPLEMENT#: 0 Category Code: CHPT	CONTINGENCY BALANCE (incl. this change) $8,744,207.20
COST: $250,000.00 INCREASE ☑ DECREASE ☐	HEADQUARTERS APPROVAL REQUIRED? ☑ YES ☐ NO
SUPPLEMENTAL FUNDS PROVIDED: $0.00	IS THIS REQUEST IN ACCORDANCE WITH ENVIRONMENTAL DOCUMENTS? ☑ YES ☐ NO
CCO DESCRIPTION: Modify blockouts and access openings.	**PROJECT DESCRIPTION:** Construct bridge, roadway, building and electrical system.

Original Contract Time:	Time Adj. This Change:	Previously Approved CCO Time Adjustments:	Percentage Time Adjusted: (including this change)	Total # of Unreconciled Deferred Time CCO(s): (including this change)
810 Day(s)	DEF Day(s)	178 Day(s)	22 %	5

THIS CHANGE ORDER PROVIDES FOR:

Modifying blockouts, access openings, and drainage inlet for Frames 1 and 2 of Bridge No. 34-0006L as shown on sheets 2 of 6 through 6 of 6 of the CCO. The work includes replacing the embedded electrical conduits with embedded sleeves and blockout openings, modifying reinforcing steel around the sleeves and building formwork to accommodate the added blockouts, providing two 200 mm x 1000 mm blockout openings for the electrical conduits at Girder H between Bent E20L and the first intermediate diaphragm at Bent E21L, revising access openings, relocating drain inlet adjacent to Pier E17L to East side of Pier E17L, and revising girder blockouts for the 150 mm and 300 mm water lines on east side of Pier E22L. All work shall be in accordance with Sections 10-1.53, Concrete Structures," 10-1.67, "Reinforcement," and 10-1.92, "Miscellaneous Metal (Bridge)," of the Special Provisions.

The embedded conduits for routing of electrical conduits shown on the original contract plans are not constructible and will be replaced with embedded sleeves and blockout openings. Blockout openings are also needed at Girder H for electrical conduits. These blockouts were not indicated on the contract plans. The drain inlet adjacent to Pier E17L is shown in the wrong location on the original plans and will be moved to the correct location. Access openings are being revised to provide proper access to utilities within the bridge. The blockouts for water lines were not shown correctly on the original plans.

This work will be paid as Extra Work at Force Account for $250,000.00, which can be financed from the contingency fund.

This change has been discussed and concurred with Hasan El Natur of Structures Design; Lina Ellis of Structures Maintenance; Patrick Treacy, HQ Coordinator; Mike Forner, SFOBB Construction Manager; and Ken Terpstra, Project Manager. An Issue and Approve was granted by Headquarters on February 26, 2009.

Adjustment of contract time is deferred pending completion of the work specified in this change as it may affect the controlling operation.

CONCURRED BY:

Construction Engineer:	Ben Ghafghazi	Date 5/1/09
Bridge Engineer:	Mehran Ardakanian	Date 04/30/09
Project Engineer:	Hasan El-Natur, Structures Design	Date 11/26/08
Project Manager:	Ken Terprstra	Date 2/23/09
FHWA Rep.:		Date
Environmental:		Date
Other (specify):	Lina Ellis, Structures Maint.	Date 12/2/08
Other (specify):	Patrick Treacy, HQ Const. Coord.	Date 2/20/09
District Prior Approval By:	Mike Forner, Principal TE	Date 2/23/09
HQ (Issue Approve) By:	Bob Molera	Date 2/26/09
Resident Engineer's Signature:		Date 5/1/09

ESTIMATE OF COST

	THIS REQUEST	TOTAL TO DATE
ITEMS	$0.00	$0.00
FORCE ACCOUNT	$250,000.00	$250,000.00
AGREED PRICE	$0.00	$0.00
ADJUSTMENT	$0.00	$0.00
TOTAL	$250,000.00	$250,000.00

FEDERAL PARTICIPATION

☐ PARTICIPATING ☐ PARTICIPATING IN PART ☑ NONE
☐ NON-PARTICIPATING (MAINTENANCE) ☐ NON-PARTICIPATING

FEDERAL SEGREGATION (if more than one Funding Source or P.I.P. type)
☑ CCO FUNDED PER CONTRACT ☐ CCO FUNDED AS FOLLOWS

FEDERAL FUNDING SOURCE	PERCENT

ADA Notice: For individuals with sensory disabilities, this document is available in alternate formats. For information call: (916) 654-6410 or TDD (916) 654-3880 or write Records and Forms Management, 1120 N Street, MS-89, Sacramento, CA 95814.

STATE OF CALIFORNIA - DEPARTMENT OF TRANSPORTATION

CONTRACT CHANGE ORDER MEMORANDUM

DATE: 5/21/2009 Page 1 of 1

TO: AMER BATA / BEN GHAFGHAZI	FILE: E.A. 04 - 0120L4
FROM: BEN GHAFGHAZI	CO-RTE-PM ALA-80-1.6/2.7
	FED. NO. NO FED AID
CCO#: 78 SUPPLEMENT#: 1 Category Code: CHPT	CONTINGENCY BALANCE (incl. this change) $7,322,373.20
COST: $50,000.00 INCREASE ☑ DECREASE ☐	HEADQUARTERS APPROVAL REQUIRED? ☑ YES ☐ NO
SUPPLEMENTAL FUNDS PROVIDED: $0.00	IS THIS REQUEST IN ACCORDANCE WITH ENVIRONMENTAL DOCUMENTS? ☑ YES ☐ NO
CCO DESCRIPTION: Modify blockouts and access openings WB.	**PROJECT DESCRIPTION:** Construct bridge, roadway, building and electrical system.

Original Contract Time:	Time Adj. This Change:	Previously Approved CCO Time Adjustments:	Percentage Time Adjusted: (including this change)	Total # of Unreconciled Deferred Time CCO(s): (including this change)
810 Day(s)	0 Day(s)	184 Day(s)	23 %	10

THIS CHANGE ORDER PROVIDES FOR:

Additional funds for modifying blockouts, access openings, and drainage inlet for Frames 1 and 2 of Bridge No. 34-0006L as specified in CCO No. 78.

CCO No. 78 was written to correct various issues on the original plans related to conduits, access openings, and drainage on the bridge. This supplement provides additional funds for the work, as the cost of the work was higher than originally anticipated.

This work will be paid as Extra Work at Force Account for $50,000.00, which can be financed from the contingency fund.

This change has been discussed and concurred with Patrick Treacy, HQ Coordinator; Mike Forner, SFOBB Construction Manager; and Ken Terpstra, Project Manager. Design and Maintenance concurrences is not necessary since this CCO is for additional funds only. An Issue and Approve was granted by Headquarters on June 16, 2009.

A determination of the delay in completion of the contract due to the work specified by CCO No. 78 has been made in accordance with Section 10-1.14, "Progress Schedule (Critical Path Method)," of the Special Provisions and Section 8-1.07, "Liquidated Damages," of the Standard Specifications. The time impact is zero days.

CONCURRED BY:			
Construction Engineer:	Ben Ghafghazi	Date	6/16/09
Bridge Engineer:	Mehran Ardakanian	Date	6/17/09
Project Engineer:	Ken Terprstra	Date	6/16/09
Project Manager:		Date	
FHWA Rep.:		Date	
Environmental:		Date	
Other (specify):	Patrick Treacy, HQ Const. Coord.	Date	6/3/09
Other (specify):		Date	
District Prior Approval By:	Mike Forner, Principal TE	Date	5/27/09
HQ (Issue Approve) By:	Bob Molera	Date	6/16/09
Resident Engineer's Signature:		Date	6/16/09

ESTIMATE OF COST	THIS REQUEST	TOTAL TO DATE
ITEMS	$0.00	$0.00
FORCE ACCOUNT	$50,000.00	$300,000.00
AGREED PRICE	$0.00	$0.00
ADJUSTMENT	$0.00	$0.00
TOTAL	$50,000.00	$300,000.00

FEDERAL PARTICIPATION

☐ PARTICIPATING ☐ PARTICIPATING IN PART ☑ NONE
☑ NON-PARTICIPATING (MAINTENANCE) ☐ NON-PARTICIPATING

FEDERAL SEGREGATION (if more than one Funding Source or P.I.P. type)
☑ CCO FUNDED PER CONTRACT ☐ CCO FUNDED AS FOLLOWS

FEDERAL FUNDING SOURCE	PERCENT

ADA Notice: For individuals with sensory disabilities, this document is available in alternate formats. For information call: (916) 654-6410 or TDD (916) 654-3880 or write Records and Forms Management, 1120 N Street, MS-89, Sacramento, CA 95814.

STATE OF CALIFORNIA - DEPARTMENT OF TRANSPORTATION

CONTRACT CHANGE ORDER

Change Requested by: Engineer

CCO 78	Suppl. No. 1	Contract No. 04 - 0120L4	Road ALA-80-1.6/2.7	FED. AID LOC.: NO FED AID

M C M CONSTRUCTION INC

You are directed to make the following changes from the plans and specifications or do the following described work not included in the plans and specifications for this contract. ***NOTE: This change order is not effective until approved by the Engineer.***

Description of work to be done, estimate of quantities and prices to be paid. (Segregate between additional work at contract price, agreed price and force account.) Unless otherwise stated, rates for rental of equipment cover only such time as equipment is actually used and no allowance will be made for idle time. This last percentage shown is the net accumulated increase or decrease from the original quantity in the Engineer's Estimate.

Extra Work at Force Account:

Provide additional funds to modify blockouts, access openings, and drainage inlet for Frames 1 and 2 of Bridge No. 34-0006L as specified in CCO No. 78.

Estimated cost of Extra Work at Force Account $50,000.00

A determination of the delay in completion of the contract due to the work specified by CCO No. 78 has been made in accordance with Section 10-1.14, "Progress Schedule (Critical Path Method)," of the Special Provisions and Section 8-1.07, "Liquidated Damages," of the Standard Specifications. The time impact is zero days.

Estimated Cost: Increase ☑ **Decrease** ☐ **$50,000.00**

By reason of this order the time of completion will be adjusted as follows: 0 days

Submitted by

Signature	Resident Engineer BEN GHAFGHAZI	Date 6/16/09

Approval Recommended by

Signature	Construction Manager Amer Bata / Mehran Ardakanian	Date 7/15/09

Engineer Approval by

Signature	Construction Manager Amer Bata / Mehran Ardakanian	Date 7/15/09

We the undersigned contractor, have given careful consideration to the change proposed and agree, if this proposal is approved, that we will provide all equipment, furnish the materials, except as may otherwise be noted above, and perform all services necessary for the work above specified, and will accept as full payment therefor the prices shown above.

NOTE: If you, the contractor, do not sign acceptance of this order, your attention is directed to the requirements of the specifications as to proceeding with the ordered work and filing a written protest within the time therein specified.

Contractor Acceptance by

Signature	(Print name and title) EDMUNDO A. PUCHI, TREASURER	Date 7/14/09

Notes:
1. For girders (A) (B) (K) & (L) see "Westbound Girder Layout No. 2" sheet.
2. For Frame 2, see "Westbound Girder Layout No. 3" sheet.
3. Soffit varies linearly @ constant rate change from Hinge EW to Hinge FW.
4. For intermediate diaphragm, see "Westbound Girder Details" sheet.
5. For "Camber Diagram", see "Westbound Camber Diagrams" sheet.
6. For Deck & Soffit slab thickness not shown, see "Westbound Typical Section No. 1" sheet.
7. For Prestressing Notes see "Westbound Girder Layout No. 2" sheet.
8. Intermediate diaphragms to be placed radially. Dimensions shown are measured along ℄ WB Route 80.
9. For Service platform details, see "Service Platforms, Utility Vaults and Precast Wall General Plan 1" sheet.
10. For access openings, see "Westbound Girder Layout No. 1A and 3A" sheets.
11. For electrical conduit layout and pipe supports, loop detector details, see "Roadway Plans".
12. For mechanical layout and pipe supports details not shown, see "Roadway Plans".
13. For Utilities designation (A), see "WB Typ Section No. 1" sheet.
14. Girder opening locations are shown on "Westbound Girder Layout No. 1A and 3A" sheets.
15. The preformed loop detector will be cast with the deck and pull box will be provided as stated on preformed loop schedule as shown on "Roadway Plans".
16. See "Detail 2" on "Westbound Hinge EW Detail No. 5" sheet for additional hair pin reinf around duct.

DIST	COUNTY	ROUTE	KILOMETER POST TOTAL PROJECT	SHEET NO.	TOTAL SHEETS
04	Ala	80	1.6/2.7	205R1	643

Adam Wang
REGISTERED ENGINEER - CIVIL
1-29-07
PLANS APPROVAL DATE

REGISTERED PROFESSIONAL ENGINEER ADAM TM WANG No. 40402 Exp. 3-31-2007 CIVIL STATE OF CALIFORNIA

The State of California or its officers or agents shall not be responsible for the accuracy or completeness of electronic copies of this plan sheet.

T.Y. LIN / MOFFATT & NICHOL
TWO HARRISON STREET, SUITE 500
SAN FRANCISCO, CA 94105

W. KOO & ASSOCIATES, INC
625 THE CITY DRIVE SOUTH, SUITE 200
ORANGE, CA 92868

To get to the Caltrans web site go to: http://www.dot.ca.gov

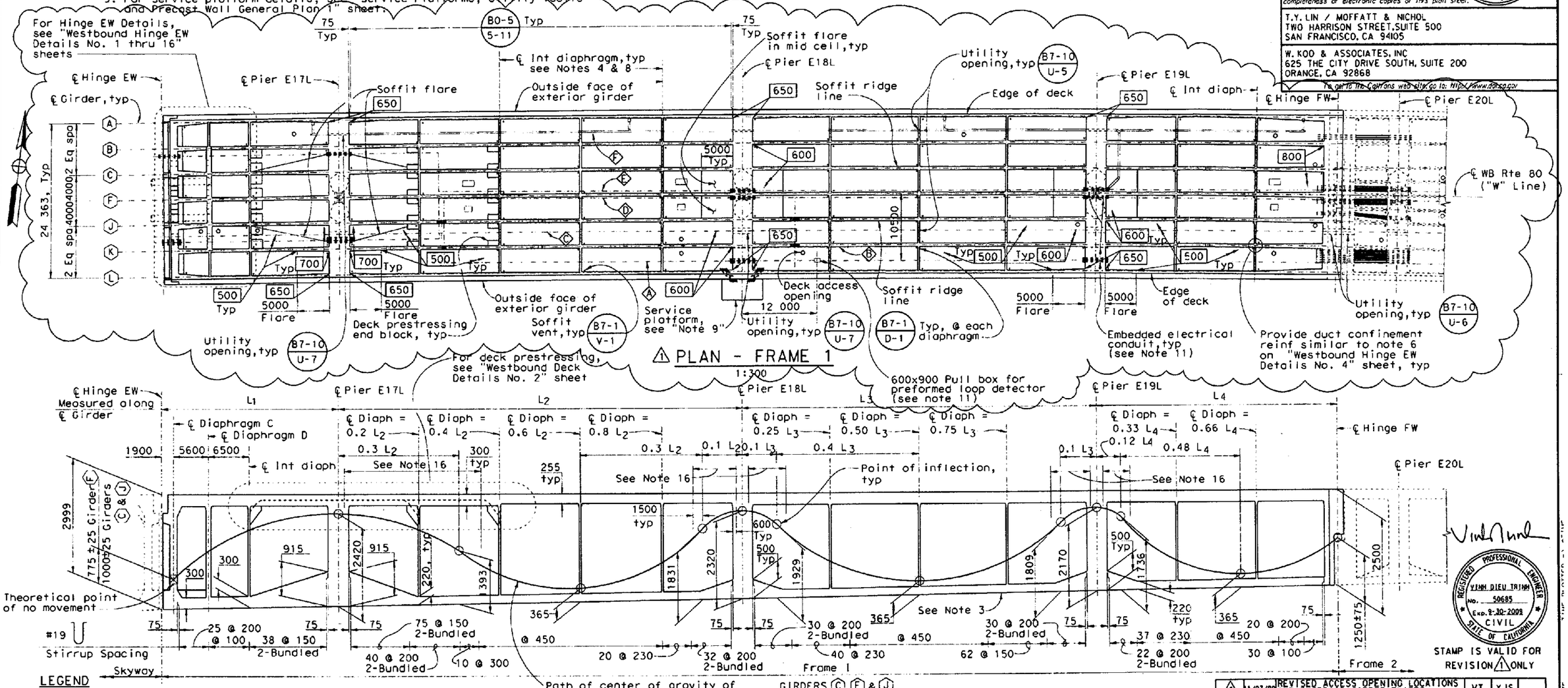

1 PLAN - FRAME 1

LEGEND
- Indicates girder stem width in millimeters, see B7-1 / S-3
- (A) Indicates girder designation
- 0.5 L_1 Indicates the fraction of each girder length in the span noted by the subscript
- Denotes embedded conduits

Note:
The Contractor shall verify all controlling field dimensions before ordering or fabricating any material

CONTRACT CHANGE ORDER NO. 78
SHEET 2 OF 6 04-0120L4
1/21/09

LONGITUDINAL SECTION - FRAME 1
No Scale

ALL DIMENSIONS ARE IN MILLIMETERS UNLESS OTHERWISE SHOWN

STAMP IS VALID FOR REVISION 1 ONLY

MARK	DATE	DESCRIPTIONS	BY	CH'D	CCO#
1	11/03/08	REVISED ACCESS OPENING LOCATIONS AND EXTERIOR GIRDER FLARES	VT	YJS	

REVISIONS

SAN FRANCISCO OAKLAND BAY BRIDGE
EAST SPAN SEISMIC SAFETY PROJECT

OAKLAND APPROACH STRUCTURES-PHASE 1

WESTBOUND GIRDER LAYOUT NO. 1

DESIGN OVERSIGHT
SAM AKKAD FRANCISCO CARPIO BERNARD CHAN HASAN EL-HATUR
SIGN OFF DATE 1/27/2009

	BY	CHECKED
DESIGN	K. Russell	A. Moubayed
DETAILS	G. Buelow	A. Moubayed
QUANTITIES	K. Russell	H. Haroun

PREPARED FOR THE STATE OF CALIFORNIA DEPARTMENT OF TRANSPORTATION

Addm Wang
PROJECT ENGINEER

BRIDGE NO. 34-0006L/R
KILOMETER POST 1.6

CU 04
EA 0120L1

DISREGARD PRINTS BEARING EARLIER REVISION DATES

REVISION DATES (PRELIMINARY STAGE ONLY) 12/20/03 2/20/04 12/20/04 2/28/05 6/27/05 11/27/05 1/27/06 4/27/06 7/27/06 11/03/08

SHEET 92 OF 224

ORIGINAL SCALE IN MILLIMETERS FOR REDUCED PLANS 0 10 20 30 40 50 60 70 80 90 100

Rev. Date: 5-8-98

DIST	COUNTY	ROUTE	KILOMETER POST TOTAL PROJECT	SHEET NO.	TOTAL SHEETS
04	Ala	80	1.6/2.7	205S2	643

REGISTERED ENGINEER - CIVIL

01-19-09
PLANS APPROVAL DATE

REGISTERED PROFESSIONAL ENGINEER VINH DIEU TRINH No. 50685 Exp. 9-30-2009 CIVIL STATE OF CALIFORNIA

The State of California or its officers or agents shall not be responsible for the accuracy or completeness of electronic copies of this plan sheet.

T.Y. LIN / MOFFATT & NICHOL
TWO HARRISON STREET, SUITE 500
SAN FRANCISCO, CA 94105

W. KOO & ASSOCIATES, INC
625 THE CITY DRIVE SOUTH, SUITE 200
ORANGE, CA 92868

To get to the Caltrans web site, go to: http://www.dot.ca.gov

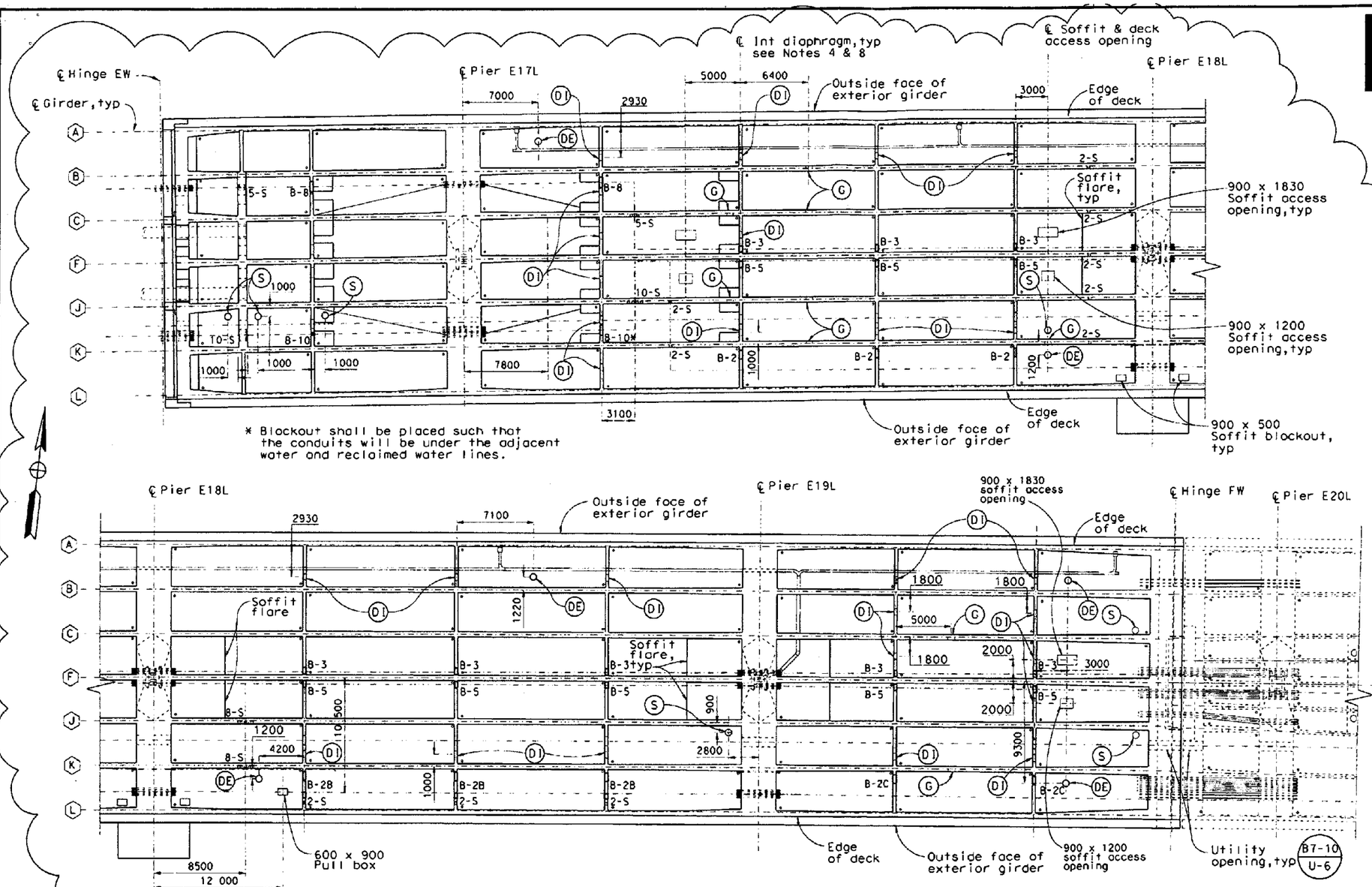

LEGEND

- Indicates girder stem width in millimeters, see B7-1 / S-3
- (A) Indicates girder designation
- Denotes embedded conduits/pipe sleeves
- (DI) Indicates 610 mm Ø diophragm access opening B7-10 / U-5
- (G) Indicates 600 mm Ø girder access opening B7-11 / U-41
- (S) Indicates 610 mm Ø grated soffit access opening
- (DE) Indicates 600 mm Ø deck access opening. See "Miscellaneous Details No. 2" sheet.
- xx-S xx-150 mm Pipe sleeves

BLOCK-OUT TYPE	SIZE
TYPE B-2	400 × 400
TYPE B-2A	800 × 200, 500 × 200
TYPE B-2B	1000 × 400, 150 pipe sleeve
TYPE B-2C	1400 × 400
TYPE B-3	600 × 430
TYPE B-5	600 × 660
TYPE B-8	1000 × 400
TYPE B-10	1000 × 430

ACCESS OPENINGS & ELECTRICAL BLOCKOUTS
PLAN - FRAME 1
1:200

SUPPLEMENTAL SHEET
CONTRACT CHANGE ORDER NO. 78
SHEET 3 OF 6 04-0120L4
1/20/09

Note:
The Contractor shall verify all controlling field dimensions before ordering or fabricating any material

ALL DIMENSIONS ARE IN MILLIMETERS UNLESS OTHERWISE SHOWN

DESIGN OVERSIGHT
BERNARD CHAN — HASAN EL-MATUR
SIGN OFF DATE 1/27/2009

	BY	CHECKED
DESIGN	K. Russell	A. Moubayed
DETAILS	G. Buelow	A. Moubayed
QUANTITIES	K. Russell	H. Haroun

PREPARED FOR THE STATE OF CALIFORNIA DEPARTMENT OF TRANSPORTATION

Adom Wong
PROJECT ENGINEER

CU 04
EA 0120L1

BRIDGE NO. 34-0006L/R
KILOMETER POST 1.6

SAN FRANCISCO OAKLAND BAY BRIDGE
EAST SPAN SEISMIC SAFETY PROJECT

OAKLAND APPROACH STRUCTURES-PHASE 1

WESTBOUND GIRDER LAYOUT NO. 1A

DISREGARD PRINTS BEARING EARLIER REVISION DATES — REVISION DATES (PRELIMINARY STAGE ON, V) 11/29/01 12/07/01 12/07/03 12/07/04 01/19/09

SHEET 92S2 OF 224

Rev. Date: 5-18-98

ORIGINAL SCALE IN MILLIMETERS FOR REDUCED PLANS 0 10 20 30 40 50 60 70 80 90 100

To get to the Caltrans web site, go to: http://www.dot.ca.gov

DIST	COUNTY	ROUTE	KILOMETER POST TOTAL PROJECT	SHEET NO.	TOTAL SHEETS
04	Ala	80	1.6/2.7	207R2	643

LEGEND

- Indicates girder stem width in millimeters, see B7-1 / S-3
- (A) Indicates girder designation
- 0.5 L_1 Indicates the fraction of each girder length in the span noted by the subscript
- Denotes embedded conduits

CONTRACT CHANGE ORDER NO. 78
SHEET 4 OF 6 04-0120L4 1/20/05

MARK	DATE	DESCRIPTIONS	BY	CH'D	CCO#
1	8/14/08	UTILITY OPENING CLARIFIED	VT	YJS	
2	11/03/08	REVISED ACCESS OPENING LOCATIONS AND EXTERIOR GIRDER FLARES	VT	YJS	

REVISIONS

REGISTERED PROFESSIONAL ENGINEER VINH DIEU TRINH No. 50685 Exp. 9-30-2009 CIVIL STATE OF CALIFORNIA

STAMP IS VALID FOR REVISION 1 ONLY

Caltrans Metric

Adam Wang
REGISTERED ENGINEER - CIVIL
1-29-07
PLANS APPROVAL DATE

REGISTERED PROFESSIONAL ENGINEER ADAM TW WANG No. 40402 Exp. 3-31-2007 CIVIL STATE OF CALIFORNIA

The State of California or its officers or agents shall not be responsible for the accuracy or completeness of electronic copies of this plan sheet.

T.Y. LIN / MOFFATT & NICHOL
TWO HARRISON STREET, SUITE 500
SAN FRANCISCO, CA 94105

W. KOO & ASSOCIATES, INC
625 THE CITY DRIVE SOUTH, SUITE 200
ORANGE, CA 92868

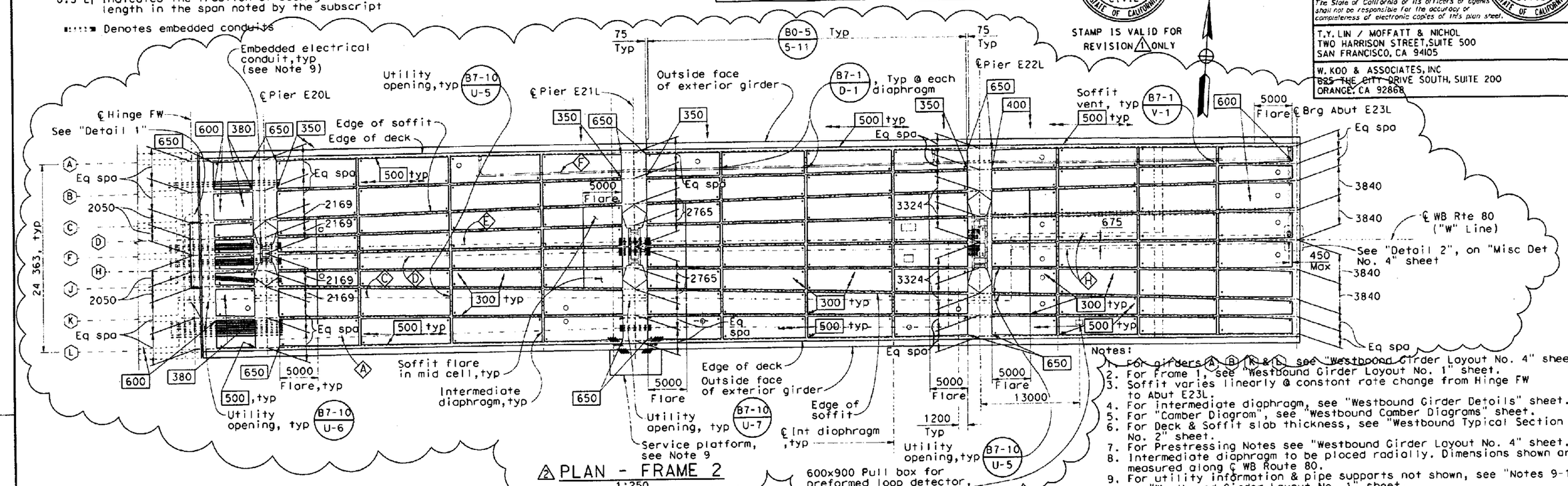

Notes:
1. For girders (A) (B) (K) & (L) see "Westbound Girder Layout No. 4" sheet.
2. For Frame 1, see "Westbound Girder Layout No. 1" sheet.
3. Soffit varies linearly @ constant rate change from Hinge FW to Abut E23L.
4. For intermediate diaphragm, see "Westbound Girder Details" sheet.
5. For "Camber Diagram", see "Westbound Camber Diagrams" sheet.
6. For Deck & Soffit slab thickness, see "Westbound Typical Section No. 2" sheet.
7. For Prestressing Notes see "Westbound Girder Layout No. 4" sheet.
8. Intermediate diaphragm to be placed radially. Dimensions shown are measured along ℄ WB Route 80.
9. For utility information & pipe supports not shown, see "Notes 9-15" on "Westbound Girder Layout No. 1" sheet.

2 PLAN - FRAME 2
1:250

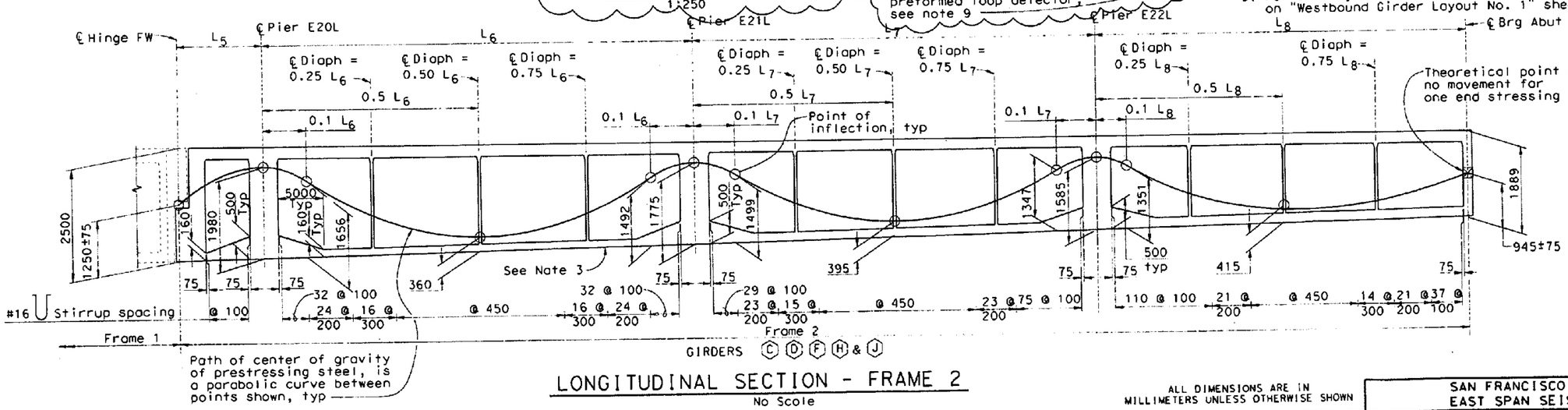

LONGITUDINAL SECTION - FRAME 2
No Scale

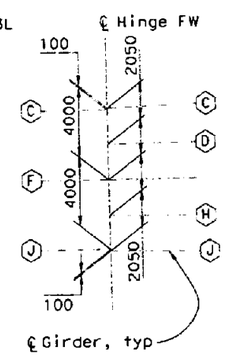

DETAIL 1
No Scale

ALL DIMENSIONS ARE IN MILLIMETERS UNLESS OTHERWISE SHOWN

SAN FRANCISCO OAKLAND BAY BRIDGE
EAST SPAN SEISMIC SAFETY PROJECT

OAKLAND APPROACH STRUCTURES-PHASE 1

WESTBOUND GIRDER LAYOUT NO. 3

DESIGN OVERSIGHT: SAM AKRAD, FRANCISCO CARPIO, BERNARD CHAN, HASAN EL-NATUR
SIGN OFF DATE 1/27/2009

	BY	CHECKED
DESIGN	K. Russell	A. Moubayed
DETAILS	G. Buelow	A. Moubayed
QUANTITIES	O. Joradot	H. Haroun

PREPARED FOR THE STATE OF CALIFORNIA DEPARTMENT OF TRANSPORTATION

Adam Wang
PROJECT ENGINEER

CU 04
EA 0120L1

BRIDGE NO. 34-0006L/R
KILOMETER POST 1.6

DISREGARD PRINTS BEARING EARLIER REVISION DATES

REVISION DATES (PRELIMINARY STAGE ONLY)

SHEET 94 OF 224

ORIGINAL SCALE IN MILLIMETERS FOR REDUCED PLANS 0 10 20 30 40 50 60 70 80 90 100

Rev. Date: 5-18-98

To get to the Caltrans web site, go to: http://www.dot.ca.gov

DIST	COUNTY	ROUTE	KILOMETER POST TOTAL PROJECT	SHEET NO.	TOTAL SHEETS
04	Ala	80	1.6/2.7	207S2	643

Caltrans Metric

REGISTERED ENGINEER - CIVIL

01-19-09

PLANS APPROVAL DATE

REGISTERED PROFESSIONAL ENGINEER VINH DIEU TRINH No. 50685 Exp. 9-30-2009 CIVIL STATE OF CALIFORNIA

The State of California or its officers or agents shall not be responsible for the accuracy or completeness of electronic copies of this plan sheet.

T.Y. LIN / MOFFATT & NICHOL
TWO HARRISON STREET, SUITE 500
SAN FRANCISCO, CA 94105

W. KOO & ASSOCIATES, INC
625 THE CITY DRIVE SOUTH, SUITE 200
ORANGE, CA 92868

LEGEND

- Indicates girder stem width in millimeters, see B7-1 / S-3
- (A) Indicates girder designation
- Denotes embedded conduits/pipe sleeves
- xx-S xx-150 mm Pipe sleeves
- (DI) Indicates 610 mm Ø diaphragm access opening B7-10 / U-5
- (G) Indicates 600 mm Ø girder access opening B7-11 / U-41
- (S) Indicates 610 mm Ø grated soffit access opening
- (DE) Indicates 600 mm Ø deck access opening, see "Miscellaneous Details No. 2" sheet.

BLOCK-OUT TYPE	SIZE
TYPE B-12A	1000 × 200; 700 × 200
TYPE B-12B**	1600 × 200; 1000 × 200
TYPE B-13	200 × 100
TYPE B-14	600 × 200
TYPE B-16**	1600 × 400
TYPE B-17	500 × 200
TYPE B-18*	1000 × 200; 1000 × 200

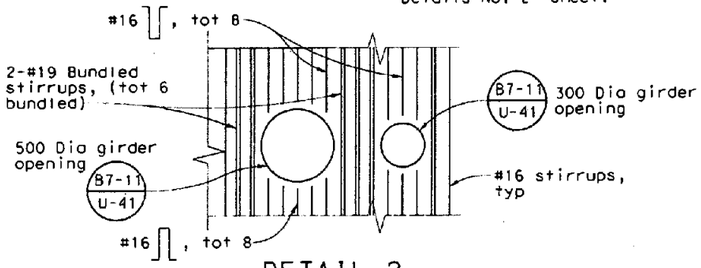

DETAIL 2
1:20

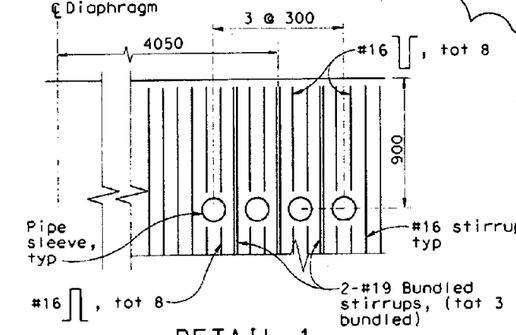

DETAIL 1
1:20

* See "Girder H Electrical Blockout Detail" on "Westbound Girder Details No. 2" sheet for additional girder reinforcement.

** For diaphragm blockout wider than 1000mm see "Diaphragm Electrical Blockout Detail" on "Westbound Girder Details No. 2" sheet.

*** See "Girder Access Opening Detail Between Pier E17L and First Diaphragm" on "Westbound Girder Details No. 2" sheet for additional girder reinforcement.

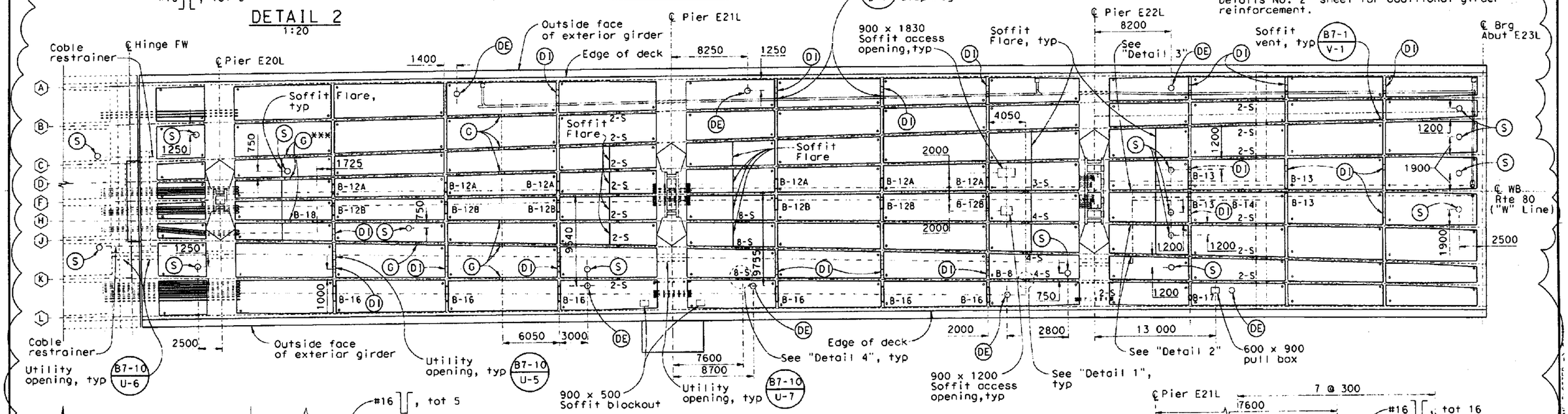

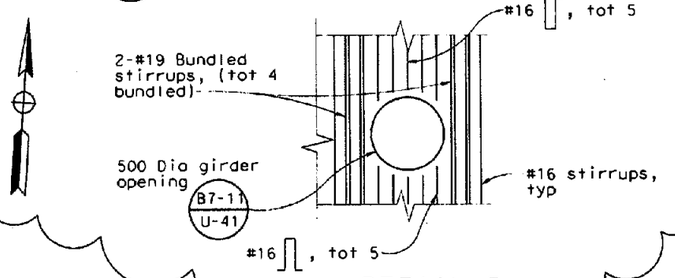

DETAIL 3
1:20

ACCESS OPENINGS & ELECTRICAL BLOCKOUTS
PLAN - FRAME 2
1:200

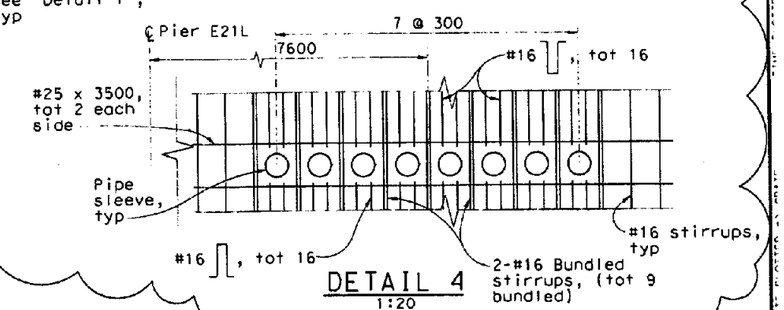

DETAIL 4
1:20

SUPPLEMENTAL SHEET
CONTRACT CHANGE ORDER NO. 78
SHEET 5 OF 6 04-012014
1/20/09

ALL DIMENSIONS ARE IN MILLIMETERS UNLESS OTHERWISE SHOWN

SAN FRANCISCO ~~OAKLAND BAY BRIDGE~~
EAST SPAN SEISMIC SAFETY PROJECT

OAKLAND APPROACH STRUCTURES-PHASE 1

WESTBOUND GIRDER LAYOUT NO. 3A

DESIGN OVERSIGHT
BERNARD CHAN — HASAN EL-NATUR
SIGN OFF DATE 1/27/2009

	BY	CHECKED
DESIGN	K. Russell	A. Moubayed
DETAILS	G. Buelow	A. Moubayed
QUANTITIES	O. Joradat	H. Horoun

PREPARED FOR THE STATE OF CALIFORNIA DEPARTMENT OF TRANSPORTATION

Adam Wang
PROJECT ENGINEER

CU 04
EA 0120L1

BRIDGE NO. 34-0006L/R
KILOMETER POST 1.6

DISREGARD PRINTS BEARING EARLIER REVISION DATES

REVISION DATES (PRELIMINARY STAGE ONLY) 12/05/08 12/17/08 12/19/08 12/22/08 01/19/09

SHEET 94S2 OF 224

Rev. Date: 5-8-98

ORIGINAL SCALE IN MILLIMETERS FOR REDUCED PLANS 0 10 20 30 40 50 60 70 80 90 100

DIST	COUNTY	ROUTE	KILOMETER POST TOTAL PROJECT	SHEET NO.	TOTAL SHEETS
04	Ala	80	1.6/2.7	209S1	643

Caltrans Metric

REGISTERED ENGINEER - CIVIL

01-19-09
PLANS APPROVAL DATE

REGISTERED PROFESSIONAL ENGINEER VINH DIEU TRINH No. 50685 Exp. 9-30-2009 CIVIL STATE OF CALIFORNIA

The State of California or its officers or agents shall not be responsible for the accuracy or completeness of electronic copies of this plan sheet.

T.Y. LIN / MOFFATT & NICHOL
TWO HARRISON STREET, SUITE 500
SAN FRANCISCO, CA 94105

WKE, INC
250 GODDARD
IRVINE, CA 92618

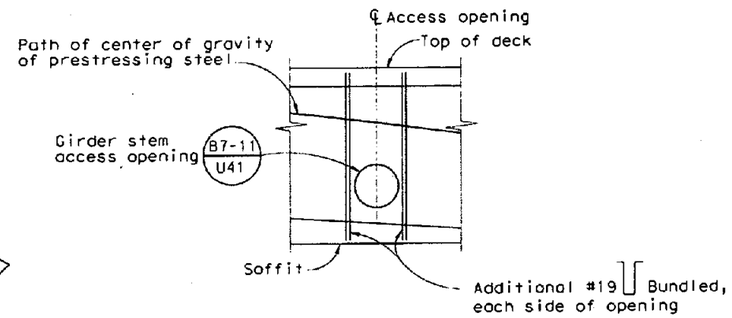

GIRDER ACCESS OPENING DETAIL
BETWEEN PIER E20L AND FIRST DIAPHRAGM
No Scale

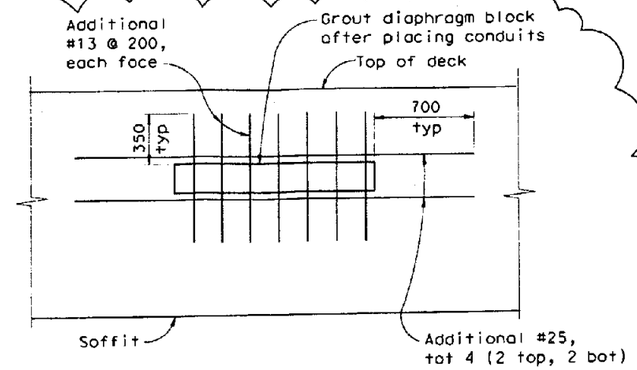

Note: For diaphragm blockout wider than 1000 mm only.

DIAPHRAGM ELECTRICAL
BLOCKOUT DETAIL
No Scale

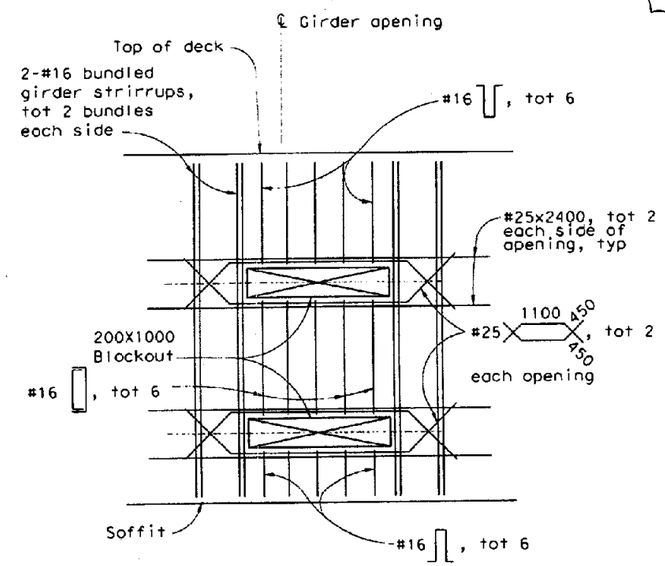

GIRDER H ELECTRICAL
BLOCKOUT DETAIL
1:20

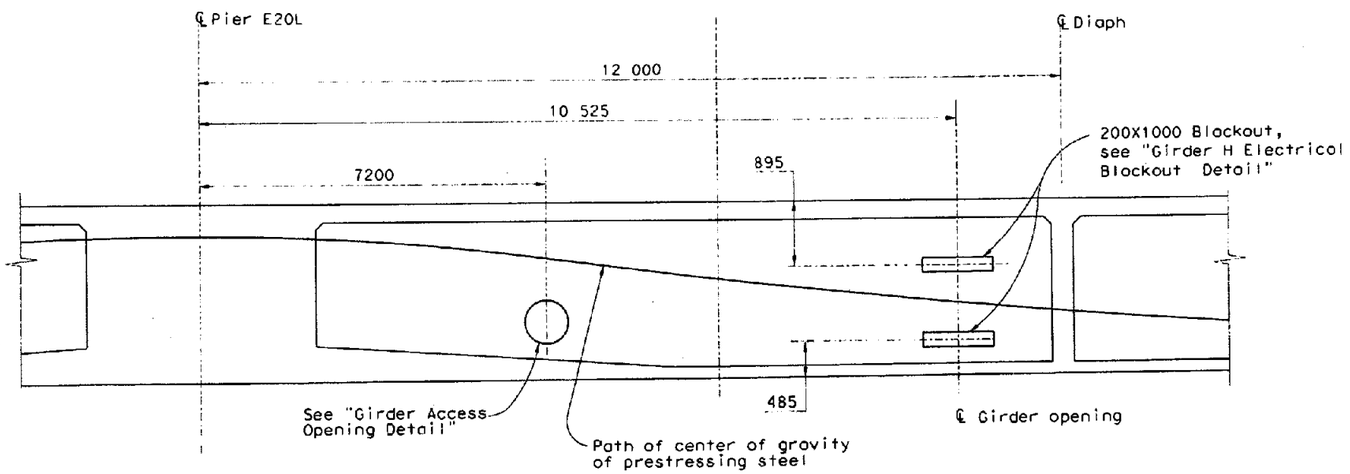

GIRDER H - GIRDER OPENING AND ELECTRICAL BLOCKOUTS
No Scale

SUPPLEMENTAL SHEET
CONTRACT CHANGE ORDER NO. 78
SHEET 6 OF 6 04-0120L4
1/20/09

ALL DIMENSIONS ARE IN MILLIMETERS UNLESS OTHERWISE SHOWN

SAN FRANCISCO OAKLAND BAY BRIDGE
EAST SPAN SEISMIC SAFETY PROJECT

OAKLAND APPROACH STRUCTURES-PHASE 1

WESTBOUND GIRDER DETAILS NO. 2

DESIGN OVERSIGHT — BERNARD CHAN, HASAN EL-HATUR — 1/27/2009
SIGN OFF DATE

	BY	CHECKED
DESIGN	V. Trinh	Y. Shangkuan
DETAILS	N. Shu	V. Trinh
QUANTITIES		

PREPARED FOR THE STATE OF CALIFORNIA DEPARTMENT OF TRANSPORTATION

Vinh Trinh
PROJECT ENGINEER

CU 04
EA 0120L1

BRIDGE NO. 34-0006L/R
KILOMETER POST 1.6

DISREGARD PRINTS BEARING EARLIER REVISION DATES

REVISION DATES (PRELIMINARY STAGE ONLY)

SHEET 96S1 OF 224

ORIGINAL SCALE IN MILLIMETERS FOR REDUCED PLANS 0 10 20 30 40 50 60 70 80 90 100

Rev. Dates 5-18-98

STATE OF CALIFORNIA - DEPARTMENT OF TRANSPORTATION

CONTRACT CHANGE ORDER MEMORANDUM

DATE: 4/6/2010 Page 1 of 1

TO: AMER BATA / BEN GHAFGHAZI

FROM: BEN GHAFGHAZI

FILE: **E.A.** 04 - 0120L4
CO-RTE-PM ALA-80-1.6/2.7
FED. NO. NO FED AID

CCO#: **78** SUPPLEMENT#: **2** Category Code: **AFZZ**

CONTINGENCY BALANCE (incl. this change) **$2,146,116.40**

COST: **$0.00** INCREASE ☐ DECREASE ☐

HEADQUARTERS APPROVAL REQUIRED? ☐ YES ☑ NO

SUPPLEMENTAL FUNDS PROVIDED: **$0.00**

IS THIS REQUEST IN ACCORDANCE WITH ENVIRONMENTAL DOCUMENTS? ☑ YES ☐ NO

CCO DESCRIPTION:
Time Adjustment of 0 Days

PROJECT DESCRIPTION:
Construct bridge, roadway, building and electrical system.

Original Contract Time:	Time Adj. This Change:	Previously Approved CCO Time Adjustments:	Percentage Time Adjusted: (including this change)	Total # of Unreconciled Deferred Time CCO(s): (including this change)
810 Day(s)	**0** Day(s)	**184** Day(s)	**23** %	**13**

THIS CHANGE ORDER PROVIDES FOR:
A time adjustment of 0 (zero) working days, in accordance with Section 8-1.07, "Liquidated Damages", of the Standard Specifications.

It has been determined that the work of Contract Change Order No. 78 has had no impact on the contractor's controlling operation. Therefore, a time extension of 0 days is recommended.

Total Time Adjustment = 0 Days

CONCURRED BY:

Construction Engineer:	Ben Ghafghazi	Date 4/7/2010
Bridge Engineer:		Date
Project Engineer:		Date
Project Manager:		Date
FHWA Rep.:		Date
Environmental:		Date
Other (specify):		Date
Other (specify):		Date
District Prior Approval By:		Date
HQ (Issue Approve) By:		Date
Resident Engineer's Signature:		~~Date~~ 4/7/2010

ESTIMATE OF COST

	THIS REQUEST	TOTAL TO DATE
ITEMS	$0.00	$0.00
FORCE ACCOUNT	$0.00	$300,000.00
AGREED PRICE	$0.00	$0.00
ADJUSTMENT	$0.00	$0.00
TOTAL	$0.00	$300,000.00

FEDERAL PARTICIPATION

☐ PARTICIPATING ☐ PARTICIPATING IN PART ☑ NONE
☐ NON-PARTICIPATING (MAINTENANCE) ☐ NON-PARTICIPATING

FEDERAL SEGREGATION (if more than one Funding Source or P.I.P. type)
☑ CCO FUNDED PER CONTRACT ☐ CCO FUNDED AS FOLLOWS

FEDERAL FUNDING SOURCE	PERCENT

ADA Notice: For individuals with sensory disabilities, this document is available in alternate formats. For information call: (916) 654-6410 or TDD (916) 654-3880 or write Records and Forms Management, 1120 N Street, MS-89, Sacramento, CA 95814.

STATE OF CALIFORNIA - DEPARTMENT OF TRANSPORTATION

CONTRACT CHANGE ORDER

Change Requested by: Engineer

CCO: 78	Suppl. No. 2	Contract No. 04 - 0120L4	Road ALA-80-1.6/2.7	FED. AID LOC.: NO FED AID

To: **M C M CONSTRUCTION INC**

You are directed to make the following changes from the plans and specifications or do the following described work not included in the plans and specifications for this contract. ***NOTE: This change order is not effective until approved by the Engineer.***

Description of work to be done, estimate of quantities and prices to be paid. (Segregate between additional work at contract price, agreed price and force account.) Unless otherwise stated, rates for rental of equipment cover only such time as equipment is actually used and no allowance will be made for idle time. This last percentage shown is the net accumulated increase or decrease from the original quantity in the Engineer's Estimate.

TIME ADJUSTMENT:

A determination of the delay in completion of the contract due to the work specified by Contract Change Order No. 78 has been made in accordance with the provisions of Section 8-1.07 of the Standard Specifications.

Time Adjustment = 0 Days

Acceptance of this change order constitutes an agreement of full resolution of all time impact costs resulting from Change Order No. 78.

This change order acts to resolve the deferred time issued on Change Order No. 78, and no additional time shall be granted.

Estimated Cost: Increase ☐ **Decrease** ☐ **$0.00**

By reason of this order the time of completion will be adjusted as follows: 0 days

Signature	**Resident Engineer** BEN GHAFGHAZI	**Date** 4/7/2010
Signature	**Construction Manager** Amer Bata	**Date** 4/8/2010
Signature	**Construction Manager** Amer Bata	**Date** 7/14/10

We the undersigned contractor, have given careful consideration to the change proposed and agree, if this proposal is approved, that we will provide all equipment, furnish the materials, except as may otherwise be noted above, and perform all services necessary for the work above specified, and will accept as full payment therefor the prices shown above.

NOTE: If you, the contractor, do not sign acceptance of this order, your attention is directed to the requirements of the specifications as to proceeding with the ordered work and filing a written protest within the time therein specified.

Signature	**(Print name and title)** JAMES A. CARTER, PRESIDENT	**Date** 7/14/10

STATE OF CALIFORNIA - DEPARTMENT OF TRANSPORTATION

CONTRACT CHANGE ORDER MEMORANDUM

DATE: 9/1/2010

TO: AMER BATA / BEN GHAFGHAZI	FILE: E.A. 04 - 0120L4
FROM: BEN GHAFGHAZI	CO-RTE-PM ALA-80-1.6/2.7
	FED. NO. NO FED AID
CCO#: 78 SUPPLEMENT#: 4 Category Code: CHPT	CONTINGENCY BALANCE (incl. this change): $901,318.90
COST: $120,000.00 INCREASE ☑ DECREASE ☐	HEADQUARTERS APPROVAL REQUIRED? ☑ YES ☐ NO
SUPPLEMENTAL FUNDS PROVIDED: $0.00	IS THIS REQUEST IN ACCORDANCE WITH ENVIRONMENTAL DOCUMENTS? ☑ YES ☐ NO
CCO DESCRIPTION: Provide Additional Fund	**PROJECT DESCRIPTION:** Construct bridge, roadway, building and electrical system.

Original Contract Time:	Time Adj. This Change:	Previously Approved CCO Time Adjustments:	Percentage Time Adjusted: (including this change)	Total # of Unreconciled Deferred Time CCO(s): (including this change)
810 Day(s)	0 Day(s)	0 Day(s)	0 %	0

THIS CHANGE ORDER PROVIDES FOR:

Additional funds for modifying blockouts, access openings, and drainage inlet for Frames 1 and 2 of Bridge No. 34-0006L as specified in CCO No. 78.

CCO No. 78 was written to correct various issues on the original plans related to conduits, access openings, and drainage on the bridge. CCO No. 78, Supplement 1, was subsequently written for additional funds, and Supplement 2 was written to close deferred time. Since then, it has been determined that the cost of this work is higher than previously anticipated, therefore another supplement is necessary to cover these additional costs.

This work will be paid as Extra Work at Force Account for $120,000.00, which can be financed from the contingency fund.

Design and Maintenance concurrences is not necessary since this CCO is for additional funds only.

No adjustment of contract time is warranted as this change does not affect the controlling operation.

CONCURRED BY:

Construction Engineer:	Ben Ghafghazi	Date 9/1/10
Bridge Engineer:		Date
Project Engineer:		Date
Project Manager:		Date
FHWA Rep.:		Date
Environmental:		Date
Other (specify):		Date
Other (specify):		Date
District Prior Approval By:		Date
HQ (Issue Approve) By:		Date
Resident Engineer's Signature:		Date 9/1/2010

ESTIMATE OF COST

	THIS REQUEST	TOTAL TO DATE
ITEMS	$0.00	$0.00
FORCE ACCOUNT	$120,000.00	$480,000.00
AGREED PRICE	$0.00	$0.00
ADJUSTMENT	$0.00	$0.00
TOTAL	$120,000.00	$480,000.00

FEDERAL PARTICIPATION

☐ PARTICIPATING ☐ PARTICIPATING IN PART ☑ NONE
☐ NON-PARTICIPATING (MAINTENANCE) ☐ NON-PARTICIPATING

FEDERAL SEGREGATION (if more than one Funding Source or P.I.P. type)
☑ CCO FUNDED PER CONTRACT ☐ CCO FUNDED AS FOLLOWS

FEDERAL FUNDING SOURCE	PERCENT

ADA Notice: For individuals with sensory disabilities, this document is available in alternate formats. For information call: (916) 654-6410 or TDD (916) 654-3880 or write Records and Forms Management, 1120 N Street, MS-89, Sacramento, CA 95814.

STATE OF CALIFORNIA - DEPARTMENT OF TRANSPORTATION

CONTRACT CHANGE ORDER

Change Requested by: Engineer

CCO: 78	Suppl. No. 4	Contract No. 04 - 0120L4	Road ALA-80-1.6/2.7	FED. AID LOC.: NO FED AID

To: **M C M CONSTRUCTION INC**

You are directed to make the following changes from the plans and specifications or do the following described work not included in the plans and specifications for this contract. ***NOTE: This change order is not effective until approved by the Engineer.***

Description of work to be done, estimate of quantities and prices to be paid. (Segregate between additional work at contract price, agreed price and force account.) Unless otherwise stated, rates for rental of equipment cover only such time as equipment is actually used and no allowance will be made for idle time. This last percentage shown is the net accumulated increase or decrease from the original quantity in the Engineer's Estimate.

Provide Additional Funds

Extra Work at Force Account:

Provide additional funds to modify blockouts, access openings, and drainage inlet for Frames 1 and 2 of Bridge No. 34-0006L as specified in CCO No. 78.

Estimated cost of Extra Work at Force Account $120,000.00

Estimated Cost: Increase ☑ **Decrease** ☐ **$120,000.00**

By reason of this order the time of completion will be adjusted as follows: 0 days

Submitted by

Signature	Resident Engineer BEN GHAFGHAZI	Date 9/1/2010

Approval Recommended by

Signature	Construction Manager Amer Bata	Date 9/3/10

Engineer Approval by

Signature	Construction Manager Amer Bata	Date 9/3/10

We the undersigned contractor, have given careful consideration to the change proposed and agree, if this proposal is approved, that we will provide all equipment, furnish the materials, except as may otherwise be noted above, and perform all services necessary for the work above specified, and will accept as full payment therefor the prices shown above.

NOTE: If you, the contractor, do not sign acceptance of this order, your attention is directed to the requirements of the specifications as to proceeding with the ordered work and filing a written protest within the time therein specified.

Contractor Acceptance by

Signature Not Required	(Print name and title)	Date

STATE OF CALIFORNIA - DEPARTMENT OF TRANSPORTATION

CONTRACT CHANGE ORDER

Change Requested by: Engineer

CCO: 79	Suppl. No. 0	Contract No. 04 - 0120L4	Road ALA-80-1.6/2.7	FED. AID LOC.: NO FED AID

M C M CONSTRUCTION INC

You are directed to make the following changes from the plans and specifications or do the following described work not included in the plans and specifications for this contract. ***NOTE: This change order is not effective until approved by the Engineer.***

Description of work to be done, estimate of quantities and prices to be paid. (Segregate between additional work at contract price, agreed price and force account.) Unless otherwise stated, rates for rental of equipment cover only such time as equipment is actually used and no allowance will be made for idle time. This last percentage shown is the net accumulated increase or decrease from the original quantity in the Engineer's Estimate.

Install additional drainage for Bridge No. 34-0006R.

Extra Work at Force Account:

Install additional deck drain inlet at Sta. E 84+60 and connect to structure drainage system as shown on sheets 2 of 4 through 4 of 4 of this CCO. All work shall be in accordance with Section 10-1.92, "Miscellaneous Metal (Bridge)," of the Special Provisions.

Estimated cost of Extra Work at Force Account $10,000.00

Estimated Cost: Increase ☑ Decrease ☐ **$10,000.00**

By reason of this order the time of completion will be adjusted as follows: 0 days

Submitted by

Signature	Resident Engineer BEN GHAFGHAZI	Date 12/11/08

Approval Recommended by

Signature	Construction Engineer Ben Ghafghazi	Date 12/11/08

Engineer Approval by

Signature	Construction Engineer Ben Ghafghazi	Date 12/19/08

We the undersigned contractor, have given careful consideration to the change proposed and agree, if this proposal is approved, that we will provide all equipm furnish the materials, except as may otherwise be noted above, and perform all services necessary for the work above specified, and will accept as full paymer therefor the prices shown above.

NOTE: If you, the contractor, do not sign acceptance of this order, your attention is directed to the requirements of the specifications as to proceeding with the ordered work and filing a written protest within the time therein specified.

Contractor Acceptance by

Signature	(Print name and title) EDMUNDO A. PUCHI, TREASURER	Date 12/17/08

DIST.	COUNTY	ROUTE	KILOMETER POST TOTAL PROJECT	SHEET NO.	TOTAL SHEETS
04	Ala	80	1.6/2.7	121R1	643

REGISTERED ENGINEER - CIVIL

1-29-07
PLANS APPROVAL DATE

REGISTERED PROFESSIONAL ENGINEER MOHAN S. CHAR No. C057894 Exp. 6/30/08 CIVIL STATE OF CALIFORNIA

The State of California or its officers or agents shall not be responsible for the accuracy or completeness of electronic copies of this plan sheet.

T.Y. LIN / MOFFATT & NICHOL
TWO HARRISON STREET, SUITE 500
SAN FRANCISCO, CA 94105

LIM & NASCIMENTO ENGINEERING CORPORATION
12 MAUCHLY, BLDG L
IRVINE, CA 92618

To get to the Caltrans web site, go to: http://www.dot.ca.gov

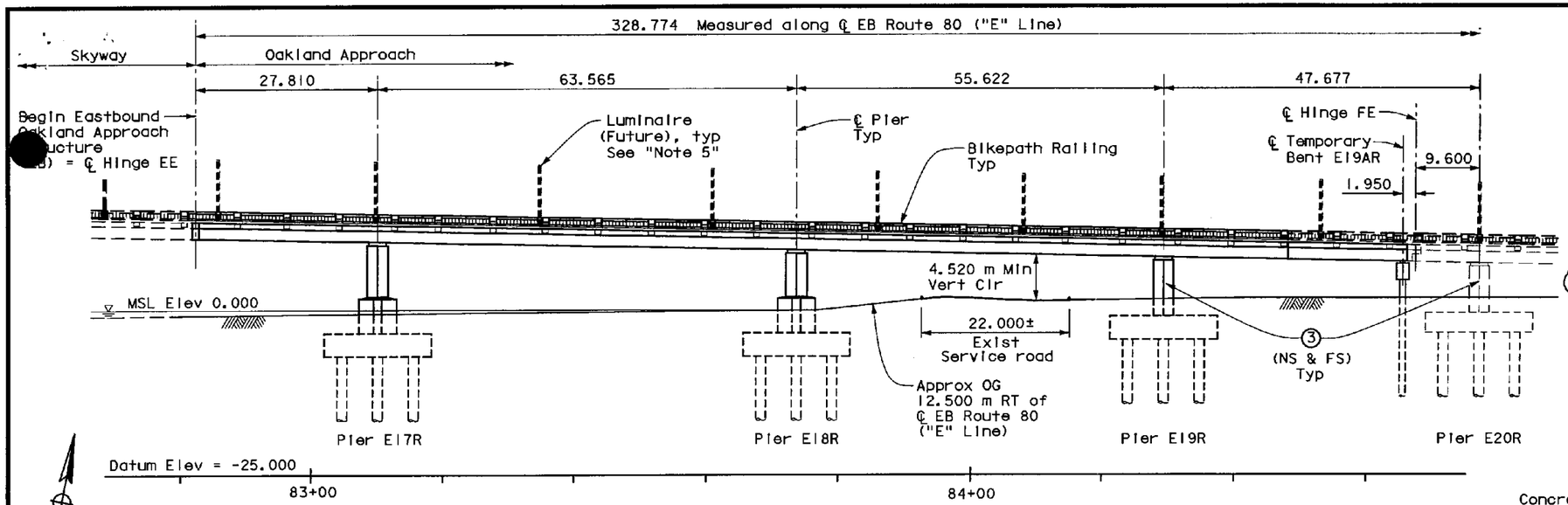

DEVELOPED ELEVATION
1:400

DECK DRAIN LOCATIONS*	
Station	Side
83+20.000	Rt
83+70.000	Rt
84+20.000	Rt
84+60.000	Rt

* See "Note 8" △1

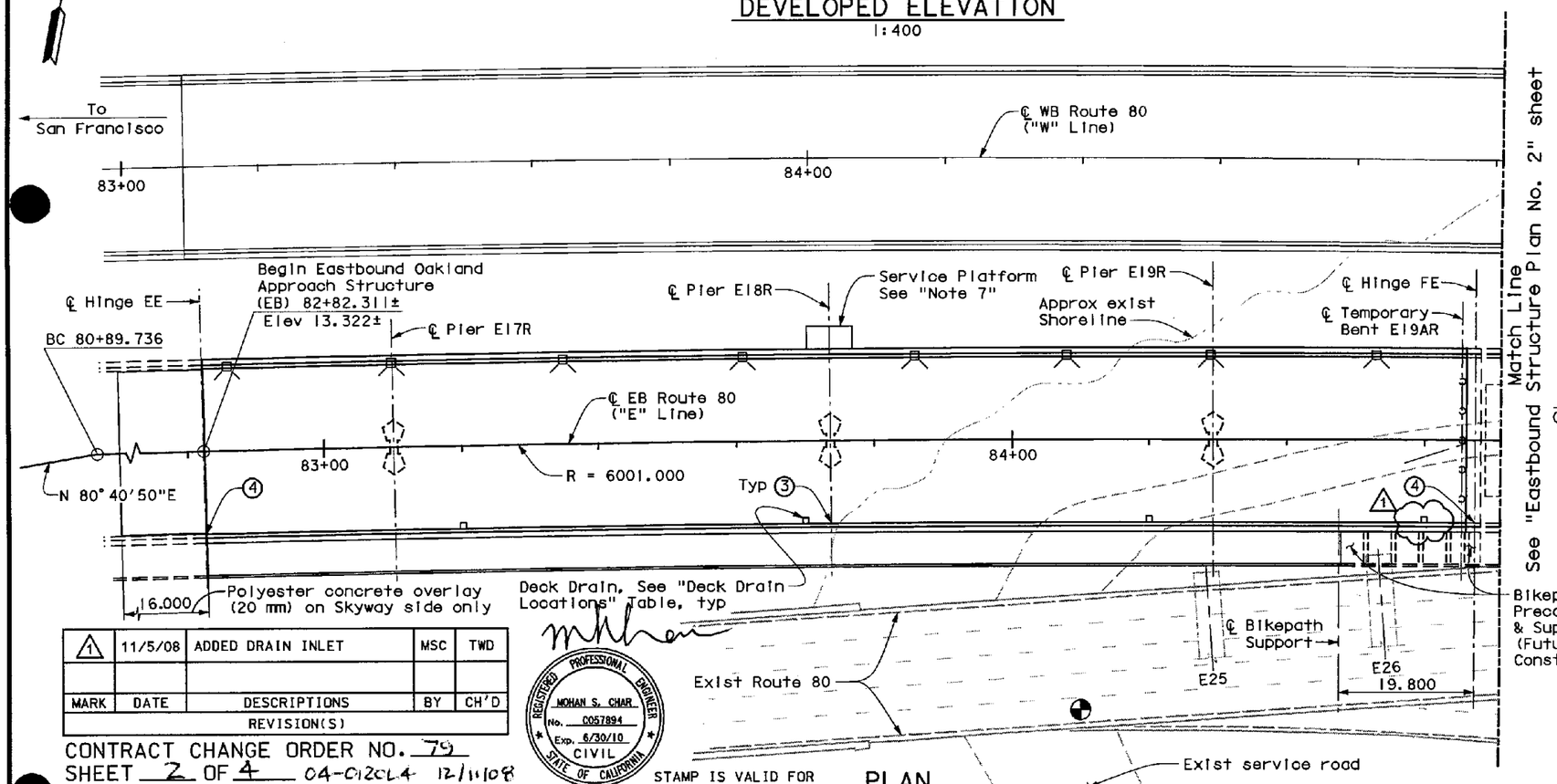

PLAN
1:400

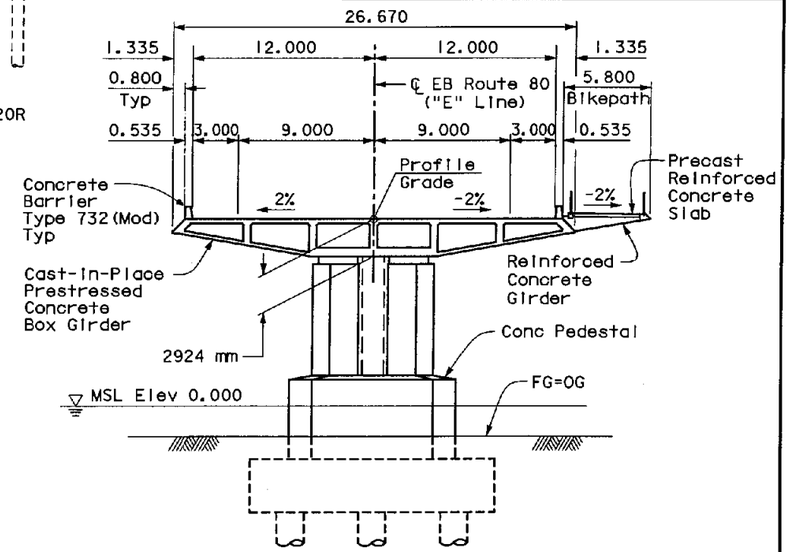

TYPICAL SECTION
1:200

Notes:
1. Pier E17R shown. Piers E18R and E19R similar except where shown otherwise.
2. For Westbound Structure, see "Westbound Structure Plan No. 1 and No. 2" sheets.
3. For Deck Drain Details see "Miscellaneous Details No. 2" sheet.
4. For Luminaire Supports see "Miscellaneous Details No. 1" sheet.
5. For Luminaire and Locations, see "Roadway Plans".
6. Utilities not shown. See "Eastbound Typical Section 1 & 2" sheets.
7. For Service Platform, see "Service Platforms, Utility Vault and Precast Wall General Plan 1" sheet.
8. For Schematic Deck Drain Layout, see "Miscellaneous Details No. 4" sheet.

LEGEND
- → Indicates Direction of Travel
- Indicates luminaire
- ▫ Indicates deck drain, Type D-1 (Mod)
- Point of minimum vertical clearance at exist Route 80
- (3) Paint Pier Number (NS & FS)
- (4) Paint hinge name "Hinge EE" or "Hinge FE" as applicable

MARK	DATE	DESCRIPTIONS	BY	CH'D
△1	11/5/08	ADDED DRAIN INLET	MSC	TWD
REVISION(S)				

CONTRACT CHANGE ORDER NO. 79
SHEET 2 OF 4 04-0120L4 12/11/08

REGISTERED PROFESSIONAL ENGINEER MOHAN S. CHAR No. C057894 Exp. 6/30/10 CIVIL STATE OF CALIFORNIA

STAMP IS VALID FOR REVISION △1 ONLY

ALL DIMENSIONS ARE IN METERS UNLESS OTHERWISE SHOWN

Note: The Contractor shall verify all controlling field dimensions before ordering or fabricating any material.

DESIGN OVERSIGHT
SAM AKKAD FRANCISCO CARPIO BERNARD CHAN HASAN EL-NATUR
11/10/08
SIGN OFF DATE

Rev. Date: 5-18-99

	BY	CHECKED
DESIGN	M. CHAR	T. DUDLEY
DETAILS	N. MORCILLO/M. ANDRASEK	M. CHAR
QUANTITIES	N. MORCILLO/Y. KIM	V. SIVAKOLUNDU/T. DUDLEY

PREPARED FOR THE STATE OF CALIFORNIA DEPARTMENT OF TRANSPORTATION

MOHAN S. CHAR
PROJECT ENGINEER

CU 04
EA 0120L1

ORIGINAL SCALE IN MILLIMETERS FOR REDUCED PLANS 0 10 20 30 40 50 60 70 80 90 100

BRIDGE NO. 34-0006L/R
KILOMETER POST 1.6

SAN FRANCISCO OAKLAND BAY BRIDGE
EAST SPAN SEISMIC SAFETY PROJECT

OAKLAND APPROACH STRUCTURES - PHASE 1
EASTBOUND STRUCTURE PLAN NO. 1

DISREGARD PRINTS BEARING EARLIER REVISION DATES → REVISION DATES (PRELIMINARY STAGE ONLY) 11/8/08 0/30/03 8/28/04 10/28/04 2/18/05 6/24/05 11/14/05 1/31/06 4/17/06 7/28/06

SHEET 8 OF 224

DIST.	COUNTY	ROUTE	KILOMETER POST TOTAL PROJECT	SHEET NO.	TOTAL SHEETS
04	Ala	80	1.6/2.7	211R1	643

REGISTERED ENGINEER - CIVIL
1-29-07
PLANS APPROVAL DATE

REGISTERED PROFESSIONAL ENGINEER MOHAN S. CHAR No. C057894 Exp. 6/30/08 CIVIL STATE OF CALIFORNIA

The State of California or its officers or agents shall not be responsible for the accuracy or completeness of electronic copies of this plan sheet.

T.Y. LIN / MOFFATT & NICHOL
TWO HARRISON STREET, SUITE 500
SAN FRANCISCO, CA 94105

LIM & NASCIMENTO ENGINEERING CORPORATION
12 MAUCHLY, BLDG L
IRVINE, CA 92618

To get to the Caltrans web site, go to: http://www.dot.ca.gov

Notes:

1. For Deck prestressing details, see "Eastbound Deck Details No. 2" sheet.
2. For girders (A), (B), (K), & (L), see "Girder Layout Details No. 2" sheet.
3. Structure depth varies linearly from Hinge EE to Hinge FE.
4. Intermediate diaphragms to be placed radially. Dimensions shown are measured along ℄ EB Route 80.
5. For Utility information, see table on "Eastbound Typical Section" sheet.
6. For Access Openings, see "Miscellaneous Details No. 1-4" sheets.
7. For Prestressing Notes, see "Eastbound Girder Layout No. 2" sheet.
8. For electrical conduit layout details and Loop Detector details, see "Electrical Plans".
9. For mechanical layout and pipe support details, see "Mechanical Plans".
10. For Utilities designation, see "Eastbound Typical Section" sheet.
11. See "Service Platform Details".
12. Provide 600 Dia girder access opening at each girder per each span, see (B7-11)/(U-41). Locations to be directed and staggered by engineer.
13. Preformed Loop Detector will be cast with the deck and pullbox will be provided as stated on Preformed Loop Schedule as shown on "Roadway Plans".
14. For Additional Hair Pin reinforcement around ducts, see "Detail 2" on "Eastbound Hinge EE Details No. 5" sheet.

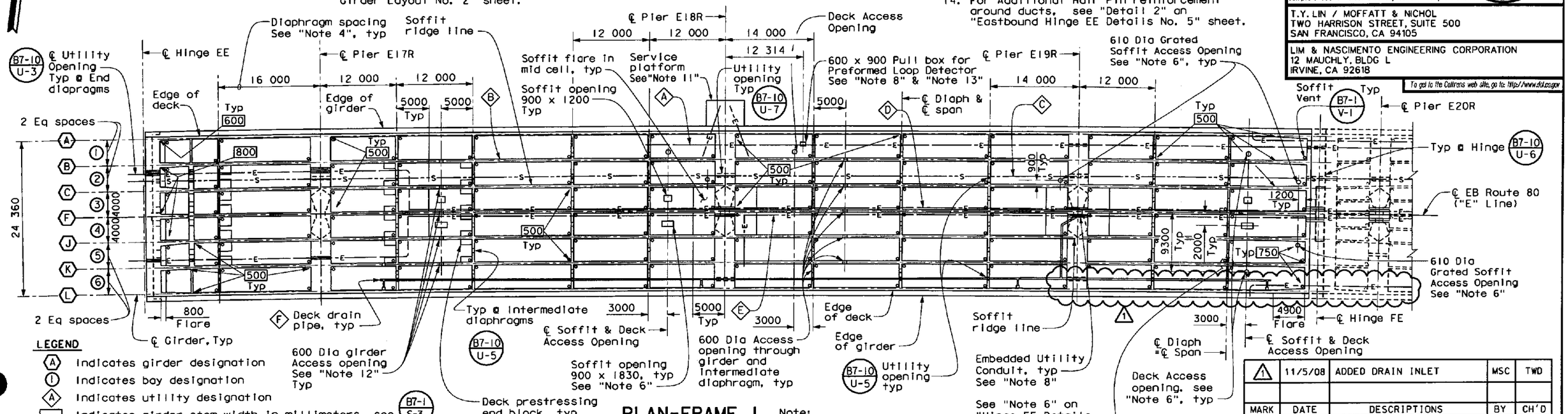

LEGEND

- (A) Indicates girder designation
- (1) Indicates bay designation
- ◇A Indicates utility designation
- ▭ Indicates girder stem width in millimeters, see (B7-1)/(S-3)
- 0.5 L1 Indicates fraction of each girder length in the span noted
- ≡ Indicates embedded Conduit

PLAN-FRAME 1

1:300

Note:
Bikeway details not shown, see "Eastbound Bikepath Details No. 2" sheet.

MARK	DATE	DESCRIPTIONS	BY	CH'D
1	11/5/08	ADDED DRAIN INLET	MSC	TWD

REVISION(S)

CONTRACT CHANGE ORDER NO. 79
SHEET 3 OF 4 04-0120L4 12/11/08

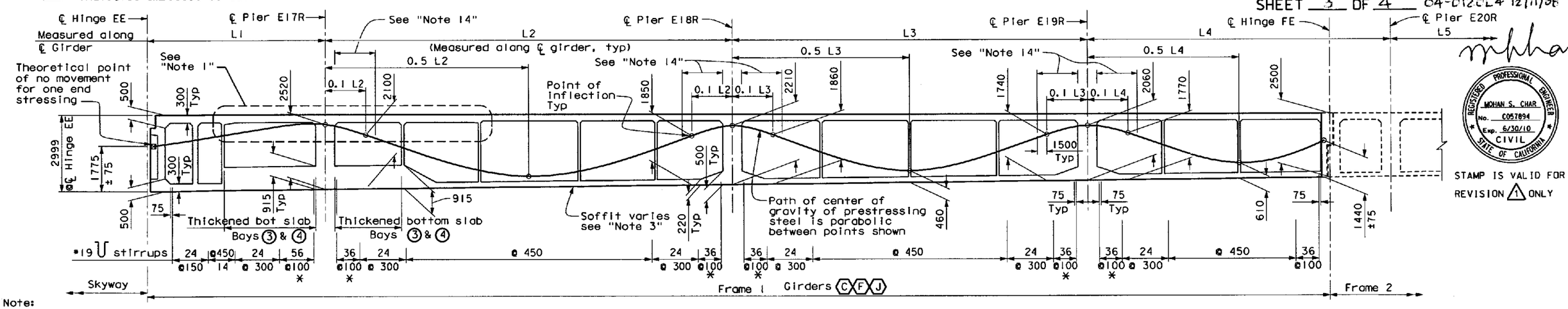

Note:
The Contractor shall verify all controlling field dimensions before ordering or fabricating any material.

* (2 Bundled)

LONGITUDINAL SECTION-FRAME 1

No Scale

ALL DIMENSIONS ARE IN MILLIMETERS UNLESS OTHERWISE SHOWN

STAMP IS VALID FOR REVISION (1) ONLY

DESIGN OVERSIGHT
SAM AKKAD, FRANCISCO CARPIO, BERNARD CHAN, HASAN EL-NATUR
11/10/08
SIGN OFF DATE

Rev. Date: 5-18-98

	BY	CHECKED
DESIGN	M. CHAR	T. DUDLEY
DETAILS	N. MORCILLO/M. ANDRASEK	M. CHAR
QUANTITIES	N. MORCILLO/Y. KIM	V. SIVAKOLUNDU/T. DUDLEY

ORIGINAL SCALE IN MILLIMETERS FOR REDUCED PLANS 0 10 20 30 40 50 60 70 80 90 100

PREPARED FOR THE STATE OF CALIFORNIA DEPARTMENT OF TRANSPORTATION

MOHAN S. CHAR
PROJECT ENGINEER

CU 04
EA 0120L1

BRIDGE NO. 34-0006L/R
KILOMETER POST 1.6

DISREGARD PRINTS BEARING EARLIER REVISION DATES

REVISION DATES (PRELIMINARY STAGE ONLY) 5/18/03 10/30/03 8/20/04 10/29/04 2/18/05 6/24/05 11/4/05 1/31/06 4/17/06 7/28/06

SHEET 98 OF 224

SAN FRANCISCO OAKLAND BAY BRIDGE
EAST SPAN SEISMIC SAFETY PROJECT

OAKLAND APPROACH STRUCTURES - PHASE 1

EASTBOUND GIRDER LAYOUT NO. 1

To get to the Caltrans web site, go to: http://www.dot.ca.gov

DIST.	COUNTY	ROUTE	KILOMETER POST TOTAL PROJECT	SHEET NO.	TOTAL SHEETS
04	Ala	80	1.6/2.7	303R1	643

Caltrans Metric

REGISTERED ENGINEER - CIVIL

1-29-07
PLANS APPROVAL DATE

REGISTERED PROFESSIONAL ENGINEER MOHAN S. CHAR No. C057894 Exp. 6/30/08 CIVIL STATE OF CALIFORNIA

The State of California or its officers or agents shall not be responsible for the accuracy or completeness of electronic copies of this plan sheet.

T.Y. LIN / MOFFATT & NICHOL
TWO HARRISON STREET, SUITE 500
SAN FRANCISCO, CA 94105

LIM & NASCIMENTO ENGINEERING CORPORATION
12 MAUCHLY, BLDG L
IRVINE, CA 92618

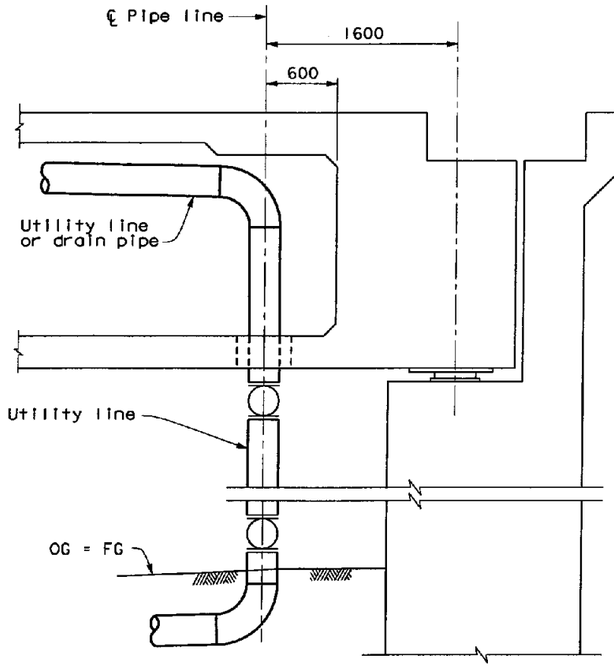

SECTION A-A
1:25

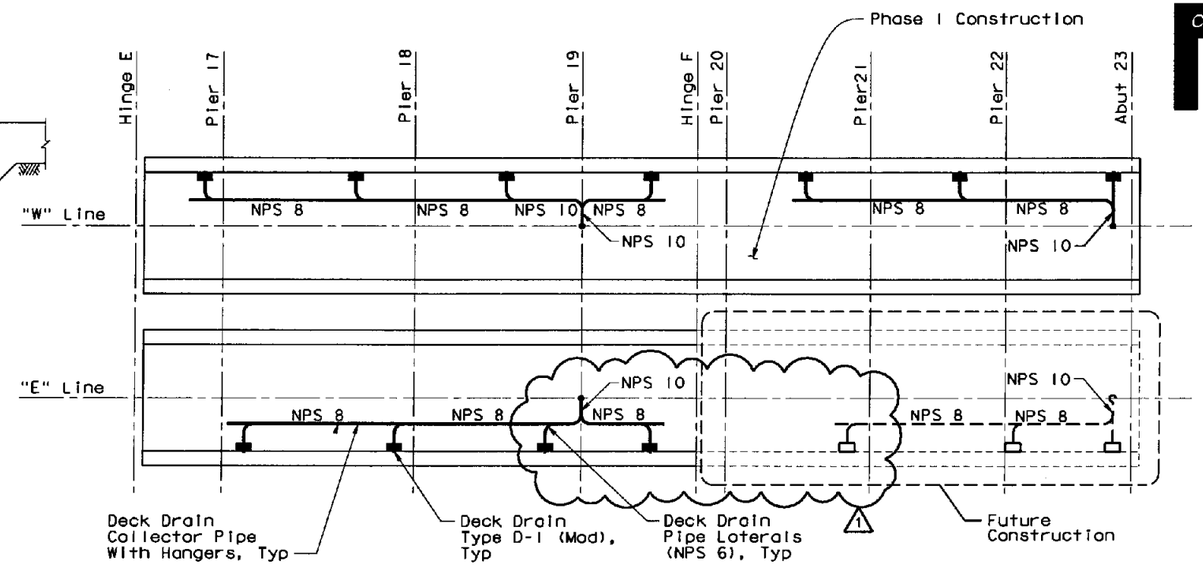

SCHEMATIC DECK DRAIN LAYOUT
No Scale

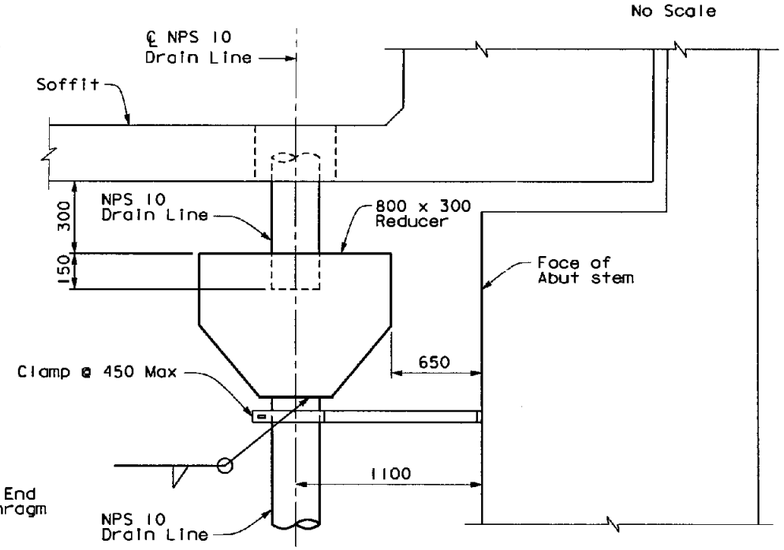

DRAIN LINE DETAIL
No Scale

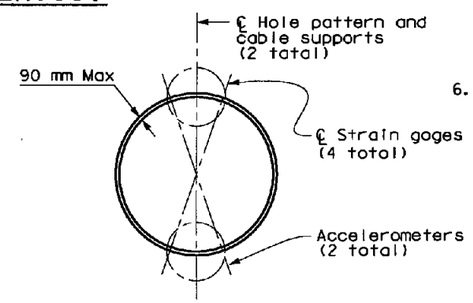

SECTION B-B

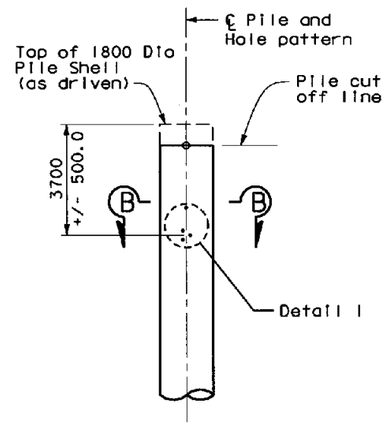

MONITORING INSTRUMENTS

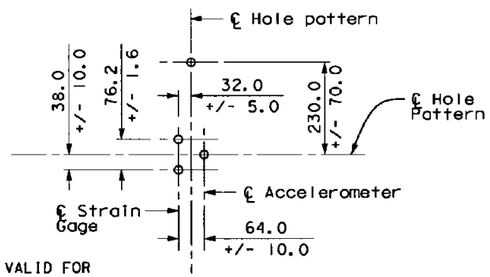

DETAIL I

Shown from outside of pile.
See Notes 3 through 5 for details of threaded holes.

NOTES:

1. For deck drain stationing, see "Westbound or Eastbound Structure Plan No. 1 & No. 2" sheets.
2. For pipe supports, see "Mechanical Plan" sheet.
3. Two set of instrument mounting holes are required oppositely spaced around the pile circumference.
4. Locate all instrument mounting holes at least 70 mm clear of longitudinal and circumferential pile fabrication welds.
5. Drill 7/32" Dia instrument mounting holes 25 mm deep and thread using a 1/4", 20 threads per inch tap. The units used for the threaded holes are in English units to match with existing state furnished equipment.
6. See "Miscellaneous Details No. 3" sheet.

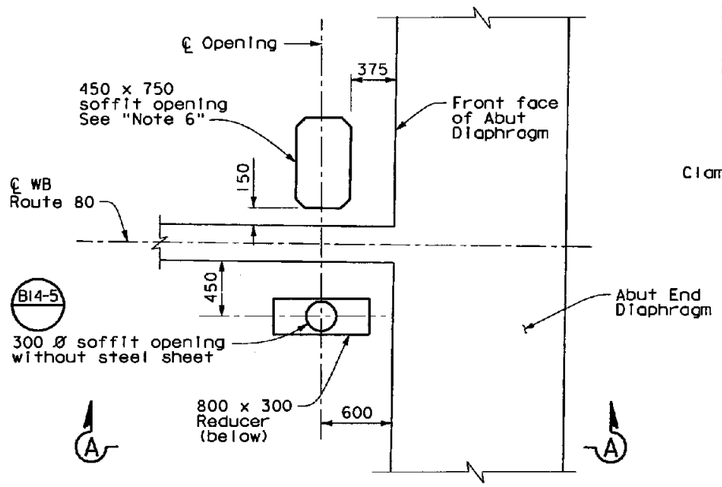

DETAIL 2
1:25

1	11/5/08	ADDED DRAIN INLET	MSC	TWD
MARK	DATE	DESCRIPTIONS	BY	CH'D
		REVISION(S)		

CONTRACT CHANGE ORDER NO. 79
SHEET 4 OF 4 04-0120L4 12/11/08

STAMP IS VALID FOR REVISION 1 ONLY

REGISTERED PROFESSIONAL ENGINEER MOHAN S. CHAR No. C057894 Exp. 6/30/10 CIVIL STATE OF CALIFORNIA

ALL DIMENSIONS ARE IN MILLIMETERS UNLESS OTHERWISE SHOWN

DYNAMIC MONITORING MOUNTING HOLE DETAILS
No Scale

DESIGN OVERSIGHT
SAM AKKAD FRANCISCO CARPIO BERNARD CHAN HASAN EL-NATUR
11/10/08
SIGN OFF DATE

	BY	CHECKED
DESIGN	M. CHAR	T. DUDLEY
DETAILS	N. MORCILLO/M. ANDRASEK	M. CHAR
QUANTITIES	N. MORCILLO/Y. KIM	V. SIVAKOLUNDU/T. DUDLEY

PREPARED FOR THE STATE OF CALIFORNIA DEPARTMENT OF TRANSPORTATION

MOHAN S. CHAR
PROJECT ENGINEER

CU 04
EA 0120L1

BRIDGE NO. 34-0006L/R
KILOMETER POST 1.6

SAN FRANCISCO OAKLAND BAY BRIDGE
EAST SPAN SEISMIC SAFETY PROJECT

OAKLAND APPROACH STRUCTURES - PHASE I

MISCELLANEOUS DETAILS NO. 4

Rev. Date: 5-18-98

ORIGINAL SCALE IN MILLIMETERS FOR REDUCED PLANS 0 10 20 30 40 50 60 70 80 90 100

DISREGARD PRINTS BEARING EARLIER REVISION DATES → 5/18/03 9/16/03 8/20/04 10/22/04 2/18/05 6/24/05 11/14/05 1/31/06 4/17/06 7/28/06

SHEET 190 OF 224

STATE OF CALIFORNIA - DEPARTMENT OF TRANSPORTATION

CONTRACT CHANGE ORDER MEMORANDUM

DATE: 11/10/2008 Page 1 of 1

TO: AMER BATA / BEN GHAFGHAZI	FILE: E.A. 04 - 0120L4
FROM: BEN GHAFGHAZI	CO-RTE-PM ALA-80-1.6/2.7
	FED. NO. NO FED AID
CCO#: 79 SUPPLEMENT#: 0 Category Code: CCPT	CONTINGENCY BALANCE (incl. this change) $13,526,232.20
COST: $10,000.00 INCREASE ☑ DECREASE ☐	HEADQUARTERS APPROVAL REQUIRED? ☐ YES ☑ NO
SUPPLEMENTAL FUNDS PROVIDED: $0.00	IS THIS REQUEST IN ACCORDANCE WITH ENVIRONMENTAL DOCUMENTS? ☑ YES ☐ NO
CCO DESCRIPTION: Install drain at E 84+60	**PROJECT DESCRIPTION:** Construct bridge, roadway, building and electrical system.

Original Contract Time:	Time Adj. This Change:	Previously Approved CCO Time Adjustments:	Percentage Time Adjusted: (including this change)	Total # of Unreconciled Deferred Time CCO(s): (including this change)
810 Day(s)	0 Day(s)	9 Day(s)	1 %	7

THIS CHANGE ORDER PROVIDES FOR:

Installation of additional drainage for Bridge No. 34-0006R. An additional deck drain inlet will be installed at Sta. E 84+60 and connected to the structure drainage system as shown on sheets 2 of 4 through 4 of 4 of the CCO.

This change is necessary to minimize runoff to the expansion joint at Hinge F. The inlet will be added upstream of the expansion joint to help keep runoff out of the joint. This is in keeping with Caltrans standard bridge design procedures for protecting expansion joints. The west bound bridge (Bridge No. 34-0006L) already has an inlet prior to the expansion joint as shown on "Miscellaneous Detail No. 4," sheet 4 of 4 of the CCO.

This work will be paid as Extra Work at Force Account for $10,000.00, which can be financed from the contingency fund.

This change has been discussed and concurred with Ade Akinsanya of Structures Design and Lina Ellis of Structures Maintenance.

No adjustment of contract time is warranted since this change does not affect the controlling operation.

CONCURRED BY:

Construction Engineer:	Ben Ghafghazi	Date 12/11/08
Bridge Engineer:	Mehran Ardakanian	Date 12/12/08
Project Engineer:	Ade Akinsanya, Structures Design	Date 10/30/08
Project Manager:		Date
FHWA Rep.:		Date
Environmental:		Date
Other (specify):	Jal Birdy, Moffat Nichol	Date 10/30/08
Other (specify):	Lina Ellis, Structures Maint.	Date 11/12/08
District Prior Approval By:		Date
HQ (Issue Approve) By:		Date
Resident Engineer's Signature:		Date 12/11/08

ESTIMATE OF COST

	THIS REQUEST	TOTAL TO DATE
ITEMS	$0.00	$0.00
FORCE ACCOUNT	$10,000.00	$10,000.00
AGREED PRICE	$0.00	$0.00
ADJUSTMENT	$0.00	$0.00
TOTAL	$10,000.00	$10,000.00

FEDERAL PARTICIPATION

☐ PARTICIPATING ☐ PARTICIPATING IN PART ☑ NONE
☐ NON-PARTICIPATING (MAINTENANCE) ☐ NON-PARTICIPATING

FEDERAL SEGREGATION (if more than one Funding Source or P.I.P. type)
☑ CCO FUNDED PER CONTRACT ☐ CCO FUNDED AS FOLLOWS

FEDERAL FUNDING SOURCE	PERCENT

ADA Notice: For individuals with sensory disabilities, this document is available in alternate formats. For information call: (916) 654-6410 or TDD (916) 654-3880 or write Records and Forms Management, 1120 N Street, MS-89, Sacramento, CA 95814.

STATE OF CALIFORNIA - DEPARTMENT OF TRANSPORTATION

CONTRACT CHANGE ORDER MEMORANDUM

DATE: 6/3/2010

TO: AMER BATA / BEN GHAFGHAZI

FROM: BEN GHAFGHAZI

FILE: E.A. 04 - 0120L4
CO-RTE-PM ALA-80-1.6/2.7
FED. NO. NO FED AID

CCO#: 78 SUPPLEMENT#: 3 Category Code: CHPT

CONTINGENCY BALANCE (incl. this change) $1,580,088.90

COST: $60,000.00 INCREASE ☑ DECREASE ☐

HEADQUARTERS APPROVAL REQUIRED? ☑ YES ☐ NO

SUPPLEMENTAL FUNDS PROVIDED: $0.00

IS THIS REQUEST IN ACCORDANCE WITH ENVIRONMENTAL DOCUMENTS? ☑ YES ☐ NO

CCO DESCRIPTION:
Additional Funds

PROJECT DESCRIPTION:
Construct bridge, roadway, building and electrical system.

Original Contract Time:	Time Adj. This Change:	Previously Approved CCO Time Adjustments:	Percentage Time Adjusted: (including this change)	Total # of Unreconciled Deferred Time CCO(s): (including this change)
810 Day(s)	0 Day(s)	184 Day(s)	23 %	0

THIS CHANGE ORDER PROVIDES FOR:

Additional funds for modifying blockouts, access openings, and drainage inlet for Frames 1 and 2 of Bridge No. 34-0006L as specified in CCO No. 78.

CCO No. 78 was written to correct various issues on the original plans related to conduits, access openings, and drainage on the bridge. CCO No. 78, Supplement 1, was subsequently written for additional funds, and Supplement 2 was written to close deferred time. Since then, it has been determined that the cost of this work is higher than previously anticipated, therefore another supplement is necessary to cover these additional costs.

This work will be paid as Extra Work at Force Account for $60,000.00, which can be financed from the contingency fund.

Design and Maintenance concurrences is not necessary since this CCO is for additional funds only. An Issue and Approve was granted by Headquarters on 06/07/2010.

No adjustment of contract time is warranted as this change does not affect the controlling operation.

CONCURRED BY:

Construction Engineer:	Ben Ghafghazi	Date 6/3/2010
Bridge Engineer:		Date
Project Engineer:		Date
Project Manager:		Date
FHWA Rep.:		Date
Environmental:		Date
Other (specify):		Date
Other (specify):		Date
District Prior Approval By:		Date
HQ (Issue Approve) By:	LARRY SALCHANEY	Date 06/07/10
Resident Engineer's Signature:		Date 6/3/2010

ESTIMATE OF COST

	THIS REQUEST	TOTAL TO DATE
ITEMS	$0.00	$0.00
FORCE ACCOUNT	$60,000.00	$360,000.00
AGREED PRICE	$0.00	$0.00
ADJUSTMENT	$0.00	$0.00
TOTAL	$60,000.00	$360,000.00

FEDERAL PARTICIPATION

☐ PARTICIPATING ☐ PARTICIPATING IN PART ☑ NONE
☐ NON-PARTICIPATING (MAINTENANCE) ☐ NON-PARTICIPATING

FEDERAL SEGREGATION (if more than one Funding Source or P.I.P. type)
☑ CCO FUNDED PER CONTRACT ☐ CCO FUNDED AS FOLLOWS

FEDERAL FUNDING SOURCE	PERCENT

ADA Notice: For individuals with sensory disabilities, this document is available in alternate formats. For information call: (916) 654-6410 or TDD (916) 654-3880 or write Records and Forms Management, 1120 N Street, MS-89, Sacramento, CA 95814.

STATE OF CALIFORNIA - DEPARTMENT OF TRANSPORTATION

CONTRACT CHANGE ORDER

Change Requested by: Engineer

CCO: 78	Suppl. No. 3	Contract No. 04 - 0120L4	Road ALA-80-1.6/2.7	FED. AID LOC.: NO FED AID

To: **M C M CONSTRUCTION INC**

You are directed to make the following changes from the plans and specifications or do the following described work not included in the plans and specifications for this contract. ***NOTE: This change order is not effective until approved by the Engineer.***

Description of work to be done, estimate of quantities and prices to be paid. (Segregate between additional work at contract price, agreed price and force account.) Unless otherwise stated, rates for rental of equipment cover only such time as equipment is actually used and no allowance will be made for idle time. This last percentage shown is the net accumulated increase or decrease from the original quantity in the Engineer's Estimate.

Extra Work at Force Account:

Provide additional funds to modify blockouts, access openings, and drainage inlet for Frames 1 and 2 of Bridge No. 34-0006L as specified in CCO No. 78.

Estimated cost of Extra Work at Force Account $60,000.00

Estimated Cost: Increase ☑ **Decrease** ☐ **$60,000.00**

By reason of this order the time of completion will be adjusted as follows: 0 days

Submitted by:		
Signature	**Resident Engineer** Ben Ghafghazi	**Date** 6/3/2010
Approval Recommended by:		
Signature	**Construction Manager** Amer Bata	**Date** 6/3/10
Engineer Approval by:		
Signature	**Construction Manager** Amer Bata	**Date** 6/3/10

We the undersigned contractor, have given careful consideration to the change proposed and agree, if this proposal is approved, that we will provide all equipment, furnish the materials, except as may otherwise be noted above, and perform all services necessary for the work above specified, and will accept as full payment therefor the prices shown above.

NOTE: If you, the contractor, do not sign acceptance of this order, your attention is directed to the requirements of the specifications as to proceeding with the ordered work and filing a written protest within the time therein specified.

Contractor Acceptance by:		
Signature Not Required	**(Print name and title)**	**Date**

CONTRACT CHANGE ORDER

Change Requested by: Engineer

CCO 80	Suppl. No. 0	Contract No. 04 - 0120L4	Road ALA-80-1.6/2.7	FED. AID LOC.: NO FED AID

To: **M C M CONSTRUCTION INC**

You are directed to make the following changes from the plans and specifications or do the following described work not included in the plans and specifications for this contract. ***NOTE: This change order is not effective until approved by the Engineer.***

Description of work to be done, estimate of quantities and prices to be paid. (Segregate between additional work at contract price, agreed price and force account.) Unless otherwise stated, rates for rental of equipment cover only such time as equipment is actually used and no allowance will be made for idle time. This last percentage shown is the net accumulated increase or decrease from the original quantity in the Engineer's Estimate.

Extra Work at Force Account:

Provide labor, equipment, and materials as necessary to modify conduit routing, racking, and grounding details for Bridge No. 34-0006L per sheets 2 of 23 through 23 of 23 of the CCO. All work shall be in accordance with Section 10-3, "Signals, Lighting and Electrical Systems," of the Special Provisions and Section 86, "Signals, Lighting and Electrical Systems," of the Standard Specification.

Estimated cost of Extra Work at Force Account $250,000.00

Estimated Cost: Increase ☑ **Decrease** ☐ **$250,000.00**

By reason of this order the time of completion will be adjusted as follows: 0 days

Submitted by

Signature	Resident Engineer BEN GHAFGHAZI	Date 2/4/09

Approval Recommended by

Signature	Construction Manager Amer Bata	Date 2/4/09

Engineer Approval by

Signature	Construction Manager Amer Bata	Date 3/5/09

We the undersigned contractor, have given careful consideration to the change proposed and agree, if this proposal is approved, that we will provide all equipment, furnish the materials, except as may otherwise be noted above, and perform all services necessary for the work above specified, and will accept as full payment therefor the prices shown above.

NOTE: If you, the contractor, do not sign acceptance of this order, your attention is directed to the requirements of the specifications as to proceeding with the ordered work and filing a written protest within the time therein specified.

Contractor Acceptance by

Signature	(Print name and title) EDMUNDO A. PUCHI, TREASURER	Date 4/30/09

DIST	COUNTY	ROUTE	KILOMETER POST TOTAL PROJECT	SHEET No	TOTAL SHEETS
04	Ala	80	1.6/2.7	382 R1	643

REGISTERED ELECTRICAL ENGINEER 05/15/06 DATE

1-29-07
PLANS APPROVAL DATE

REGISTERED PROFESSIONAL ENGINEER JENS ERLINGSSON No. 8249 Exp. 9/30/08 ELECTRICAL STATE OF CALIFORNIA

PB POWER, Inc.
A Parsons Brinckerhoff Company
303 Second St., Suite 700N
San Francisco, CA 94107-1317

The State of California or its officers or agents shall not be responsible for the accuracy or completeness of electronic copies of this plan sheet.

To get to the Caltrans web site, go to: http://www.dot.ca.gov

Caltrans Metric

MARK	DATE	DESCRIPTIONS	REV	CK	CCO
1	01/15/09	Revised conduit locations and sheet notes 2.	EJL	FSW	80

REVISIONS

CONTRACT CHANGE ORDER NO. 80
SHEET 2 OF 23 04-0120L4 1/22/09

REGISTERED PROFESSIONAL ENGINEER FADI WALIEDDINE No. 11465 Exp. 12/31/2009 ELECTRICAL STATE OF CALIFORNIA

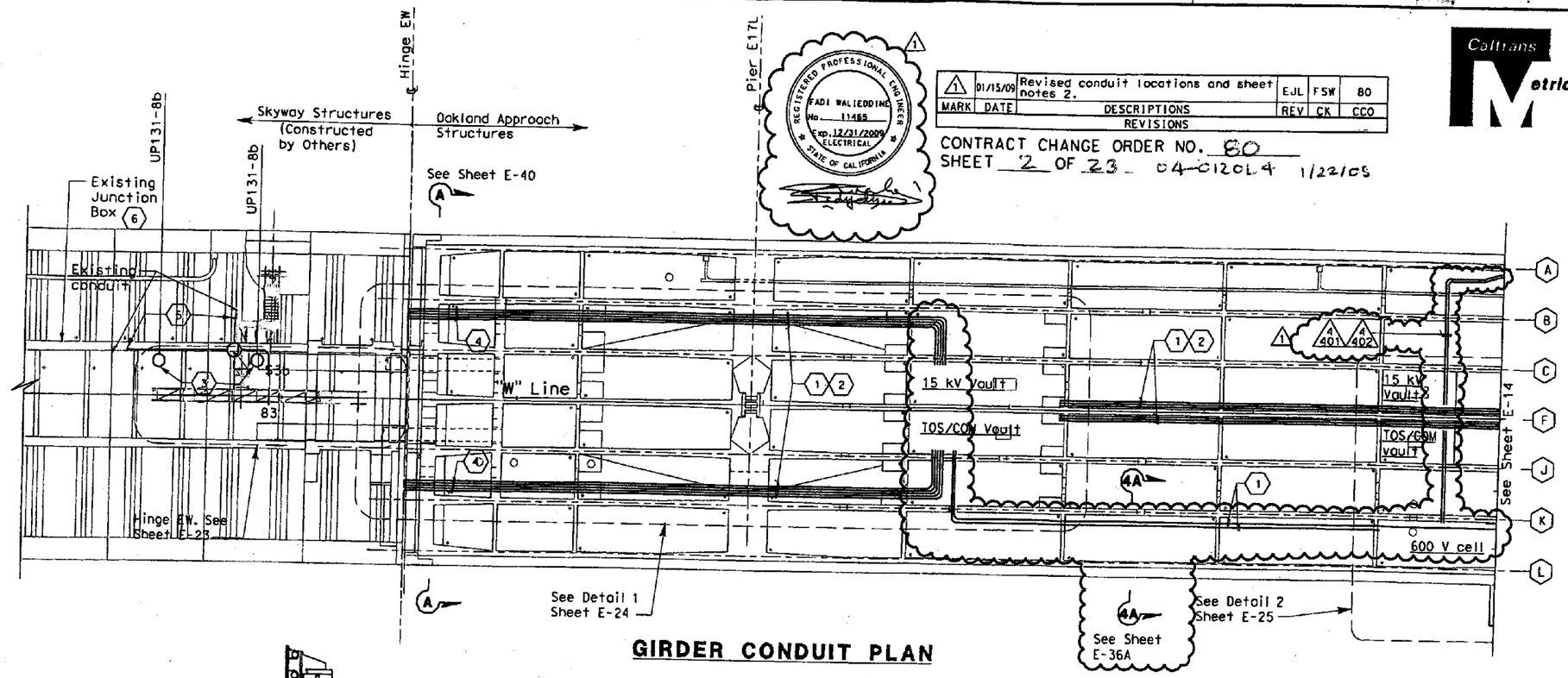

GIRDER CONDUIT PLAN

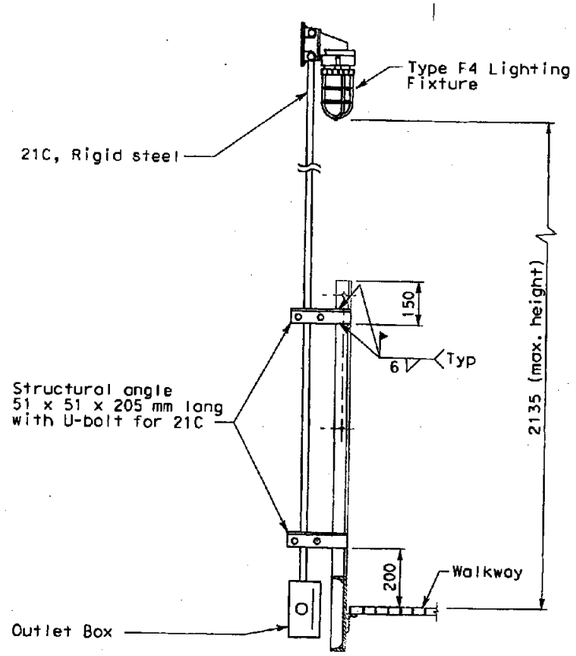

GIRDER WALKWAY LIGHTING STANCHION MOUNTED

SCALE: 1:10

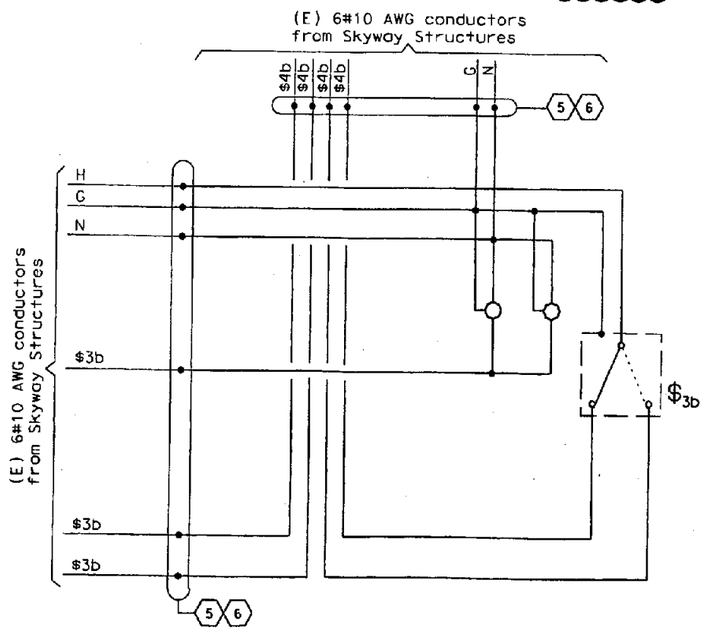

PARTIAL WIRING DIAGRAM UP-131-8

(NO SCALE)

NOTES:

1. References:
   - TOS equipment is shown for conduit routing only. For typical details of TOS controller and devices, see sheets starting at E-204.
   - For types of pull boxes, splice boxes and enclosures, see sheet E-44.
   - For overall grounding plan, see sheet E-42.
   - For conduit and cable tray schedules, see sheets starting at E-224.
   - For conduit supports, see sheets E-32 thru E-36.

SHEET NOTES:

(1) For conduit numbers, see Sheet E-24 and E-25.

(2) Conduit elbows shall be 610 mm minimum radius.

(3) Lighting fixture type F4. Compact fluorescent, non-metallic vaportight housing with guard and clear glass globe, U.L. listed for wet and marine environment, 120 VAC, high frequency ballast and (1) 32 watt CFM32/GX24Q lamp. Stanchion mounting, see detail.

(4) Connect conduits to Skyway Structures. See sheet E-23.

(5) The Contractor shall intercept existing conduit, and extend existing circuit/conductors as shown on partial wiring diagram.

(6) Splice conductors inside existing junction box.

ROADWAY AND GIRDER LEVEL WESTBOUND (LIGHTING AND ELECTRICAL SYSTEMS)

SCALE: 1:200

THIS PLAN IS ACCURATE FOR ELECTRICAL WORK ONLY.

STATE OF CALIFORNIA - DEPARTMENT OF TRANSPORTATION
Caltrans

DESIGN OVERSIGHT: BEHZAD GOLEMOHAMMADI

CALCULATED/DESIGNED BY	FK	DATE 2/06	REVISED BY
CHECKED BY	AB	2/06	DATE REVISED

LAST REVISION 00-00-00 DATE PLOTTED => 1/14/2009 TIME PLOTTED => 10:26:27 AM

FOR REDUCED PLANS ORIGINAL 0 20 40 60 80 DGN FILE =>T:\13103\WS\pse\OTD-Contract 1\CCO\Electrical\CCO-80 Conduit rack & embedd struts\40120lua013r1.dgn

DIST	COUNTY	ROUTE	KILOMETER POST TOTAL PROJECT	SHEET No	TOTAL SHEETS
04	Ala	80	1.6/2.7	383 R1	643

REGISTERED ELECTRICAL ENGINEER 05/15/06 DATE

1-29-07
PLANS APPROVAL DATE

REGISTERED PROFESSIONAL ENGINEER JENS ERLINGSSON No. 8249 EXP. 9/30/08 ELECTRICAL STATE OF CALIFORNIA

PB POWER, Inc.
A Parsons Brinckerhoff Company
303 Second St., Suite 700N
San Francisco, CA 94107-1317

The State of California or its officers or agents shall not be responsible for the accuracy or completeness of electronic copies of this plan sheet.

To get to the Caltrans web site, go to: http://www.dot.ca.gov

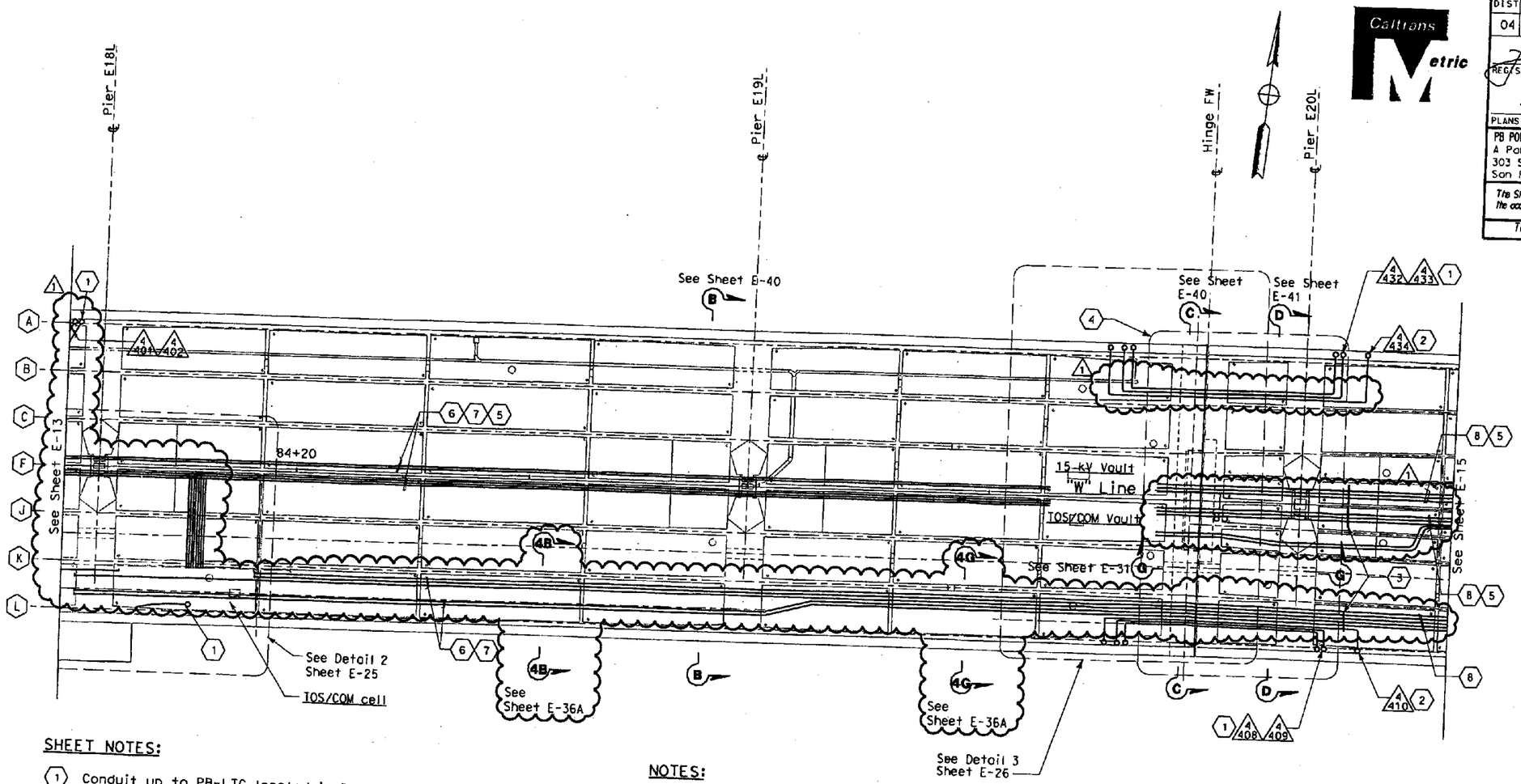

SHEET NOTES:

1. Conduit up to PB-LTG located in Barrier. See sheet E-11.
2. Conduit up to PB-COM located in Barrier. See sheet E-11.
3. The segment of conduit through the hinge to this point, 800 mm beyond face of diaphragm, shall be installed first, according to the structural construction sequence. Continuation of the conduits from this interface point shall be made using threaded conduit couplings.
4. Coordinate installation of conduits with hinge FW Structural details.
5. Conduit elbows shall be 610 mm minimum radius. 1
6. For conduit numbers, see sheet E-25.
7. For conduit numbers, see sheets E-25 and E-26.
8. For conduit numbers, see sheet E-26.

NOTES:

1. References:
   - TOS equipment is shown for conduit routing only. For typical details of TOS controller and devices, see sheets sheets starting at E-204.
   - For types of pull boxes and enclosures, see sheet E-44
   - For overall grounding plan, see sheet E-42.
   - For conduit and cable tray schedules, see sheets starting at E-224.
   - For conduit supports, see sheets E-32 thru E-36.

REGISTERED PROFESSIONAL ENGINEER FADI WALIEDDINE No. 11465 EXP. 12/31/2009 ELECTRICAL STATE OF CALIFORNIA

MARK	DATE	DESCRIPTIONS	REV	CK	CCO
1	01/15/09	Revised conduit locations and sheet notes 5.	EJL	FSW	80

REVISIONS

CONTRACT CHANGE ORDER NO. 80
SHEET 2 OF 23 - 04-0120L4 1/22/09

GIRDER CONDUIT PLAN

ROADWAY AND GIRDER LEVEL WESTBOUND
(LIGHTING AND ELECTRICAL SYSTEMS)

SCALE: 1:200

THIS PLAN IS ACCURATE FOR ELECTRICAL WORK ONLY.

CALCULATED/DESIGNED BY	FK	DATE 2/06	REVISED BY
CHECKED BY	AB	2/06	DATE REVISED

DESIGN OVERSIGHT
BEHZAD GOLEMOHAMMADI

STATE OF CALIFORNIA - DEPARTMENT OF TRANSPORTATION
Caltrans

LAST REVISION 00-00-00
DATE PLOTTED => 1/14/2009
TIME PLOTTED => 10:29:04 AM

DIST	COUNTY	ROUTE	KILOMETER POST TOTAL PROJECT	SHEET No	TOTAL SHEETS
04	Ala	80	1.6/2.7	384 R1	643

REGISTERED ELECTRICAL ENGINEER 05/15/06 DATE

1-29-07
PLANS APPROVAL DATE

REGISTERED PROFESSIONAL ENGINEER JENS ERLINGSSON No. 8249 Exp. 9/30/08 ELECTRICAL STATE OF CALIFORNIA

PB POWER, Inc.
A Parsons Brinckerhoff Company
303 Second St., Suite 700N
San Francisco, CA 94107-1317

The State of California or its officers or agents shall not be responsible for the accuracy or completeness of electronic copies of this plan sheet.

To get to the Caltrans web site, go to: http://www.dot.ca.gov

Caltrans Metric

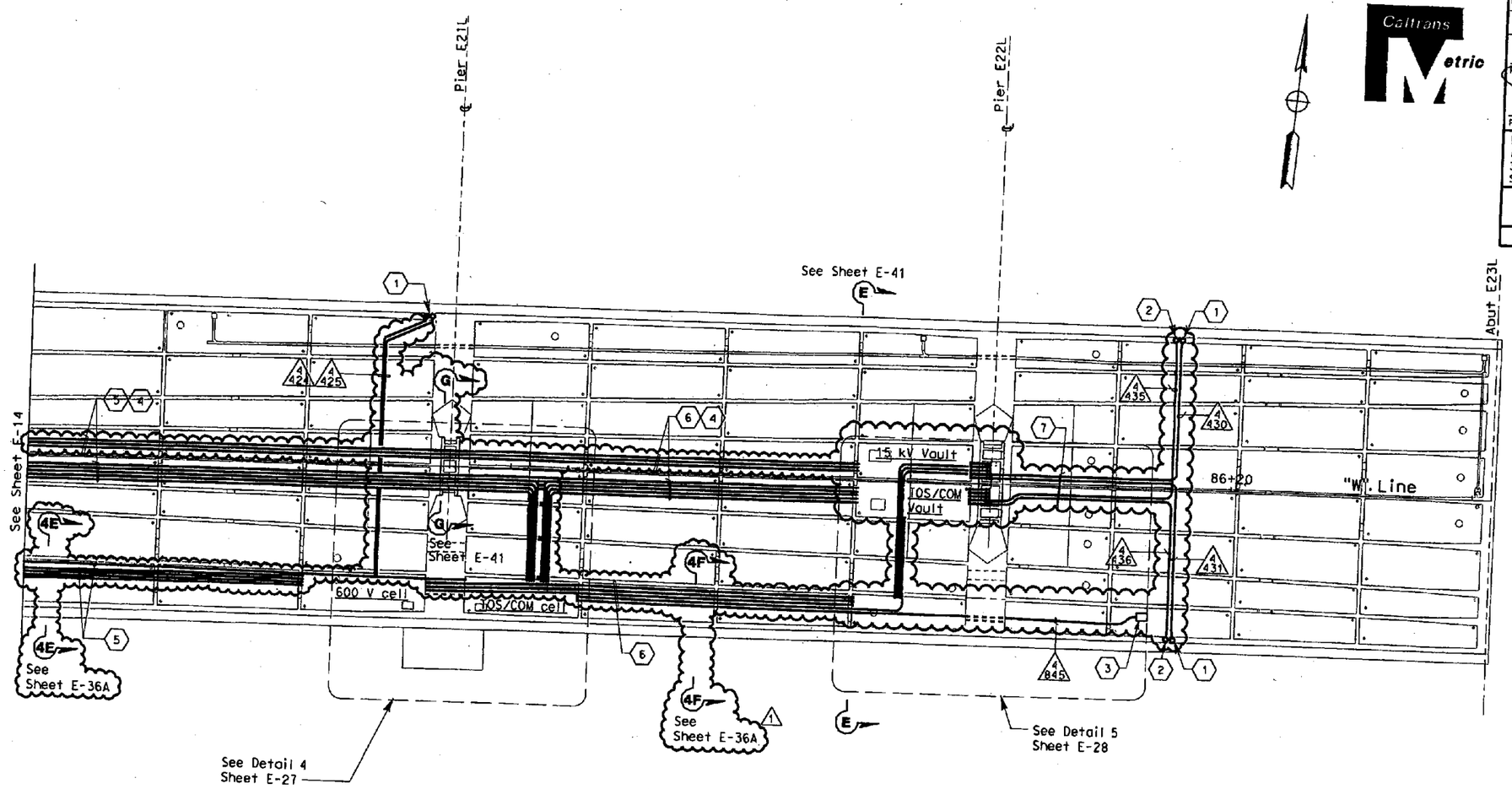

GIRDER CONDUIT PLAN

SHEET NOTES:

1. Conduit up to PB-LTG located in Barrier, see sheet E-12.
2. Conduit up to PB-COM located in Barrier, see sheet E-12.
3. Conduit to Preformed Loops Splicebox PB-4D.
4. Conduit elbows shall be 610 mm minimum radius.
5. For conduit numbers, see Sheet E-27. 1
6. For conduit numbers, see Sheets E-27 and E-28.
7. For conduit numbers, see Sheet E-28.

NOTES:

1. References:
   - TOS equipment is shown for conduit routing only. For typical details of TOS controller and devices, see sheets starting at E-204.
   - For types of pull boxes, splice boxes and enclosures, see sheet E-44.
   - For overall grounding plan, see sheet E-42.
   - For conduit and cable tray schedules, see sheets starting at E-224.
   - For conduit supports, see sheets E-32 thru E-36.

REGISTERED PROFESSIONAL ENGINEER FADI WALIEDDINE No. 11465 Exp. 12/31/2009 ELECTRICAL STATE OF CALIFORNIA

MARK	DATE	DESCRIPTIONS	REV	CK	CCO
1	01/15/09	Revised Conduit locations and sheet note 2.	EJL	FSW	80
		REVISIONS			

CONTRACT CHANGE ORDER NO. 80
SHEET 4 OF 23 04-012064 1/22/09

ROADWAY AND GIRDER LEVEL WESTBOUND
(LIGHTING AND ELECTRICAL SYSTEMS)
SCALE: 1:200

THIS PLAN IS ACCURATE FOR ELECTRICAL WORK ONLY.

STATE OF CALIFORNIA - DEPARTMENT OF TRANSPORTATION
Caltrans

DESIGN OVERSIGHT: BEHZAD GOLEMOHAMMADI

CALCULATED/DESIGNED BY	FK	DATE 2/06	REVISED BY
CHECKED BY	AB	2/06	DATE REVISED

LAST REVISION 00-00-00
DATE PLOTTED => 1/14/2009
TIME PLOTTED => 4:21:24 PM

E-15

SHEET NOTES:

1. Coordinate installation of conduits with Hinge EW structural details. Connect to existing. △1
2. Refer to sheets E-32, E-33 and E-34 for conduit support location. Refer to E-35 and E-36 drawings for conduit support details.
3. See sheet E-13 for continuation.
4. See Detail 1 on sheet E-43.
5. The segment of conduit through the hinge to this point, 800 mm beyond face of diaphragm, shall be installed first according to the structural construction sequence. Continuation of the conduits from this interface point shall be made using threaded conduit couplings.
6. Provided with pipe sleeves for conduits. △1
7. Conduits are provided with pipe sleeves. The Contractor shall ensure that conduits are solidly secured or anchored at this location.
8. The Contractor to provide non-removable warning sign above or before the girder access opening. The sign shall read "Caution - Authorized Personnel Only. Electricals Inside".
9. Conduit end shall be provided with ground bushing. Bond all conduits with #2 AWG bare copper wire, connected to the ground bar, see Detail 1, sheet E-43. △1
10. The system ground, #500 kcMIL shall be routed along the 15 kV conduit run or conduit as shown with U-bolts strap to the conduit.

NOTES:

1. References:
   - TOS equipment is shown for conduit routing only. For typical details of TOS controller and devices, see sheets starting at E-204.
   - For types of pull boxes, splice boxes and enclosures, see sheet E-44.
   - For overall grounding plan, see sheet E-42.
   - For conduit and cable tray schedules, see sheets starting at E-224.
2. For overall plan of this area, see sheet E-13.
3. △1 ~~(*) For dimensions, see structures sheets.~~ DELETED
4. Once the conduits are installed on the TOS/COM and 15 kV vaults, Contractor to grout the conduit block outs.

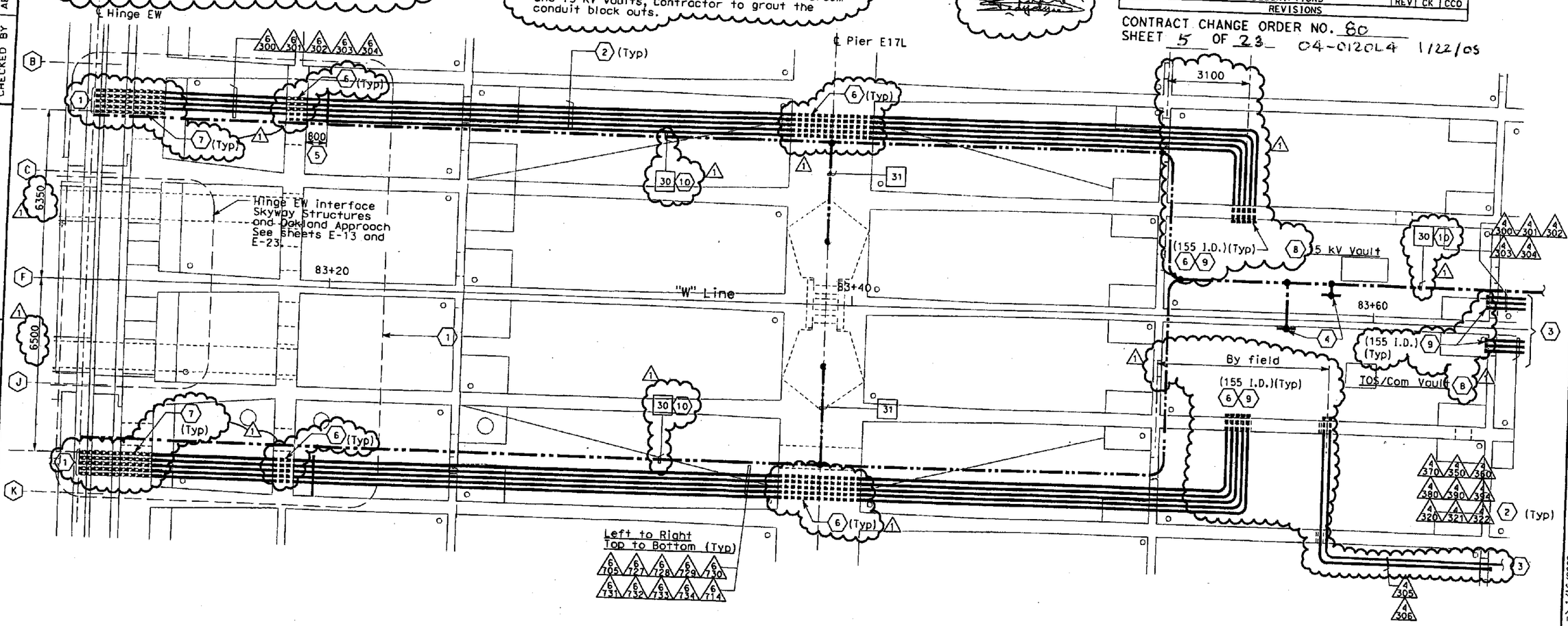

DETAIL 1 - HINGE EW AND PIER E17L

DETAILS
ROADWAY & GIRDER LEVEL WESTBOUND GIRDER CONDUIT INSTALLATION
SCALE 1:75

DIST	COUNTY	ROUTE	KILOMETER POST TOTAL PROJECT	SHEET No	TOTAL SHEETS
04	Alo	80	1.6/2.7	395 R1	643

REGISTERED ELECTRICAL ENGINEER 05/15/06 DATE

1-29-07
PLANS APPROVAL DATE

REGISTERED PROFESSIONAL ENGINEER JENS ERLINGSSON No. 8249 Exp. 9/30/08 ELECTRICAL STATE OF CALIFORNIA

PB POWER, Inc.
A Parsons Brinckerhoff Company
303 Second St., Suite 700N
San Francisco, CA 94107-1317

The State of California or its officers or agents shall not be responsible for the accuracy or completeness of electronic copies of this plan sheet.

To get to the Caltrans web site, go to: http://www.dot.ca.gov

REGISTERED PROFESSIONAL ENGINEER FADI WALIEDDINE No. 11465 Exp. 12/31/2008 ELECTRICAL STATE OF CALIFORNIA △1

MARK	DATE	DESCRIPTIONS	REV	CK	CCO
△1	01/15/09	Added pipe sleeves, sheet notes 6, 7, 8, 9, 10, notes 4. Relocated conduits. Revised sheet note 1 and note 3.	EJL	FSW	78 80

REVISIONS

CONTRACT CHANGE ORDER NO. 80
SHEET 5 OF 23 04-0120L4 1/22/09

DATE	REVISED BY	DATE	REVISED
2/06	FK	2/06	AB

CALCULATED/DESIGNED BY
CHECKED BY

DESIGN OVERSIGHT
BABZAD GOLEMOHAMMADI

STATE OF CALIFORNIA - DEPARTMENT OF TRANSPORTATION
Caltrans

DATE PLOTTED => 1/16/2009
TIME PLOTTED => 9:56:51 AM

LAST REVISION 00-00-00

DGN FILE =>T:\13103\WS\pse\DTD-Contract 1\CCO\Electrical\CCO-80\Conduit rock & embed struts\W01201up026r1.dgn

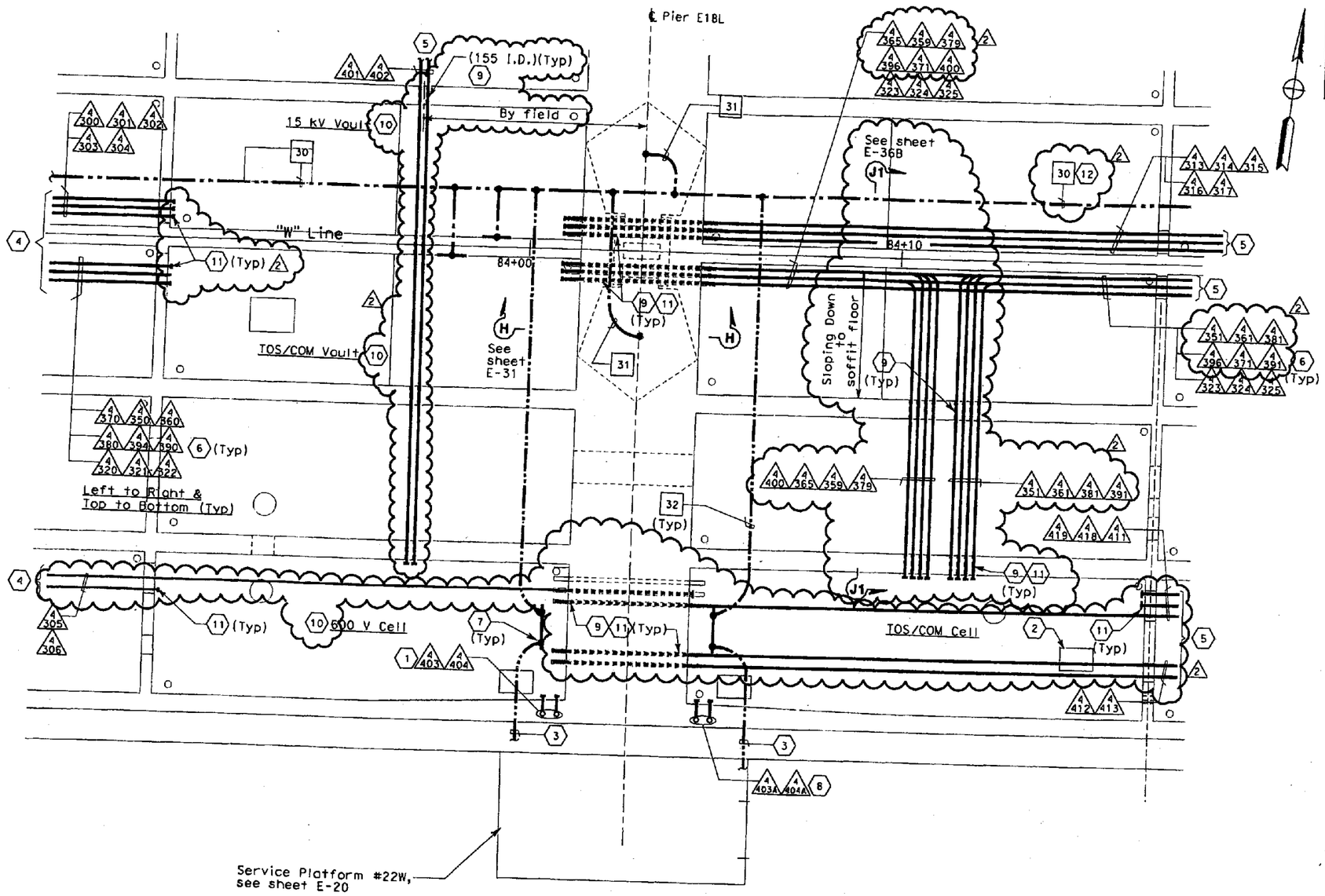

DETAIL 2 - PIER 18L

MARK	DATE	DESCRIPTIONS	REV	CK	CCO
2	01/15/09	Added pipe sleeves, sheet notes 9, 10, 11, 12 and note 3. Relocated conduits.	EJL	FSW	78/80
1	8/29/08	Added Conduits 4403A and 4404A to PB-COM.	JH	EJL	Light Pole Base
		REVISIONS			

CONTRACT CHANGE ORDER NO. 80
SHEET 6 OF 23 04-012014 1/22/09

THIS PLAN ACCURATE FOR ELECTRICAL WORK ONLY.

DIST	COUNTY	ROUTE	KILOMETER POST TOTAL PROJECT	SHEET No.	TOTAL SHEETS
04	Ala	80	1.6/2.7	396 R2	643

REGISTERED ELECTRICAL ENGINEER 05/15/06 DATE
1-29-07
PLANS APPROVAL DATE

PB POWER, Inc.
A Parsons Brinckerhoff Company
303 Second St., Suite 700N
San Francisco, CA 94107-1317

The State of California or its officers or agents shall not be responsible for the accuracy or completeness of electronic copies of this plan sheet.

To get to the Caltrans web site, go to: http://www.dot.ca.gov

SHEET NOTES:

1. Conduit up to PB-LTG located in Barrier. See sheet E-11.
2. Preformed Loops PL-W08 Splicebox PB-4D.
3. For continuation, see sheet E-20.
4. See sheet E-13 for continuation.
5. See sheet E-14 for continuation.
6. Refer to sheets E-32, E-33 and E-34 for conduit support location. Refer to sheet E-35 and E-36 for conduit support details.
7. See Detail 1 on sheet E-43.
8. Conduit up to PB-COM located in barrier. See Sheet E-11.
9. Provided with pipe sleeves for conduits.
10. The Contractor to provide non-removable warning sign above or before the girder and soffit access entry. The sign shall read "Caution - Authorized Personnel Only - Electricals Inside".
11. Conduit end shall be provided with ground bushings. Bond all conduits with #2 AWG bare copper wire, connected to the ground bar, see Detail 1, sheet E-43.
12. The system ground, #500 kcMIL shall be routed along the 15 kV conduit run or conduit as shown with U-bolts strap to the conduit.

NOTES:

1. References:
   - TOS equipment is shown for conduit routing only. For typical details of TOS controller and devices, see sheets starting at E-204.
   - For types of pull boxes, splice boxes and enclosures, see sheet E-44.
   - For overall grounding plan, see sheet E-42.
   - For conduit and cable tray schedules, see sheets starting at E-224.
2. For overall plan of this area, see sheets E-13 and E-14.
3. Once the conduits are installed on the TOS/COM, 15 kV vaults, 600 V and TOS/COM cells, Contractor to grout the conduit block outs.

DETAILS
ROADWAY AND GIRDER LEVEL WESTBOUND GIRDER CONDUIT INSTALLATION
SCALE 1:60

STATE OF CALIFORNIA - DEPARTMENT OF TRANSPORTATION
Caltrans
DESIGN OVERSIGHT
BEHZAD GOLEMOHAMMADI
CALCULATED/DESIGNED BY FK
CHECKED BY AB
DATE 2/06 REVISED BY
2/06 DATE REVISED

LAST REVISION 00-00-00
DATE PLOTTED => 1/16/2009
TIME PLOTTED => 10:00:36 AM

DGN FILE =>T:\13103\MS\bse\OTD-Contract 1\CCO\Electrical\CCO-80\Conduit rack & embedd struts\401201ua025r2.dgn

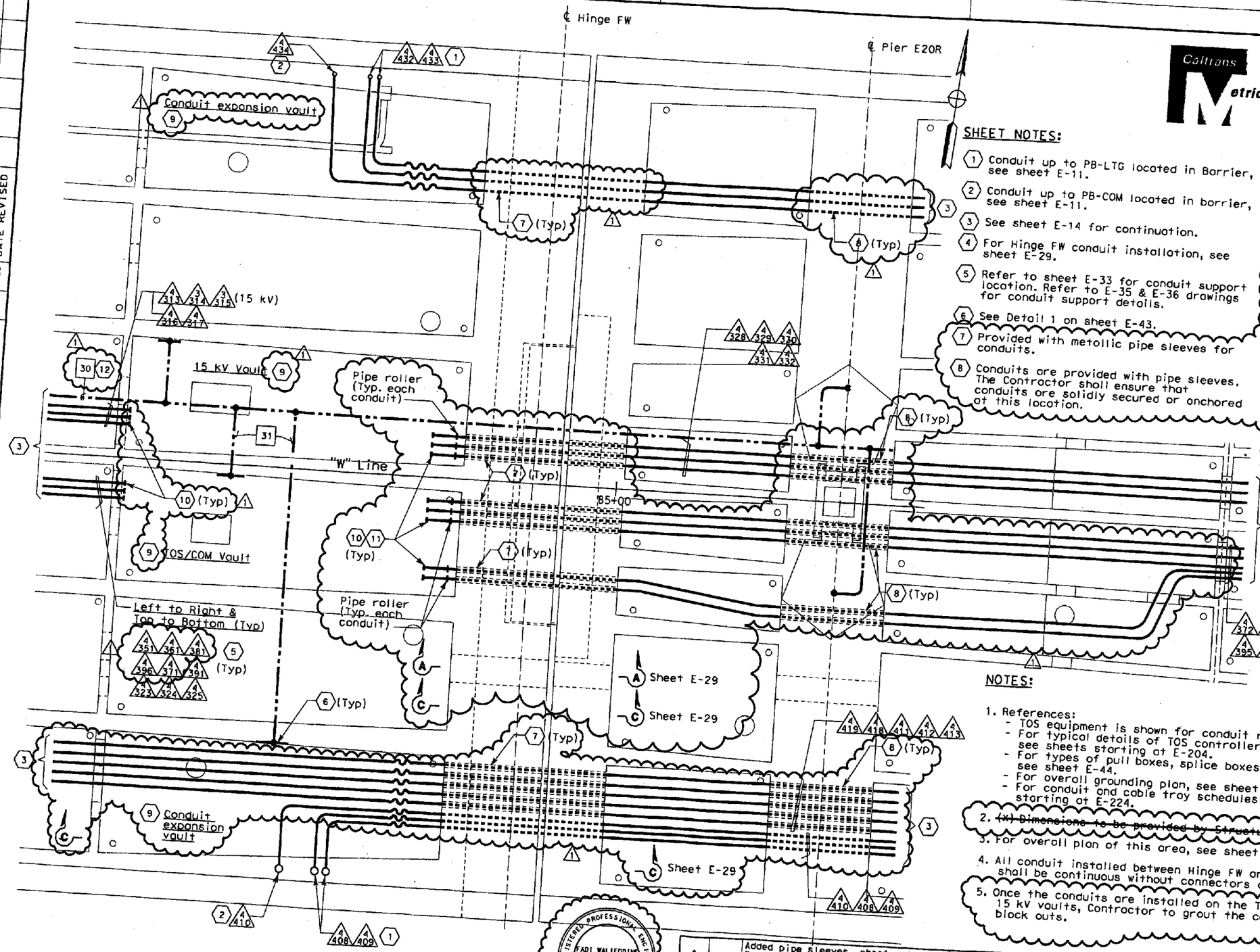

SHEET NOTES:

1. Conduit up to PB-LTG located in Barrier, see sheet E-11.
2. Conduit up to PB-COM located in barrier, see sheet E-11.
3. See sheet E-14 for continuation.
4. For Hinge FW conduit installation, see sheet E-29.
5. Refer to sheet E-33 for conduit support location. Refer to E-35 & E-36 drawings for conduit support details.
6. See Detail 1 on sheet E-43.
7. Provided with metallic pipe sleeves for conduits.
8. Conduits are provided with pipe sleeves. The Contractor shall ensure that conduits are solidly secured or anchored at this location.
9. The Contractor to provide non-removable warning sign above or before the girder and soffit access entry. The sign shall read "Caution- Authorized personnel only-Electricals inside"
10. Conduit end shall be provided with ground bushings. Bond all conduits with #2 awg bare copper wire, connected to the ground bar, see Detail 1, sheet E-43.
11. The ground conductor connected to the ground bar, shall be provided for a seismic expansion of 520 mm movement. Conductor may rest on vault floor.
12. The system ground, #500 kcMIL shall be routed along the 15 kv conduit run or conduit as shown with U-bolts strap to the conduit.

NOTES:

1. References:
   - TOS equipment is shown for conduit routing only.
   - For typical details of TOS controller and devices, see sheets starting at E-204.
   - For types of pull boxes, splice boxes and enclosures, see sheet E-44.
   - For overall grounding plan, see sheet E-42.
   - For conduit and cable tray schedules, see sheets starting at E-224.
2. ~~(X) Dimensions to be provided by Structural.~~ DELETED
3. For overall plan of this area, see sheet E-14.
4. All conduit installed between Hinge FW and Pier E20L shall be continuous without connectors or fittings.
5. Once the conduits are installed on the TOS/COM and 15 kV vaults, Contractor to grout the conduit block outs.

DETAIL 3 - HINGE FW

MARK	DATE	DESCRIPTIONS	REV	CK	CCO
1	01/15/09	Added pipe sleeves, sheet notes 7, 8, 9, 10, 11, 12 and note 5. Relocated conduits. Revised note 2.	EJL	FSW	78/80

REVISIONS

CONTRACT CHANGE ORDER NO. 80
SHEET 7 OF 23 - C4-C12014 1/22/09

DETAILS
ROADWAY AND GIRDER LEVEL WESTBOUND GIRDER CONDUIT INSTALLATION
SCALE 1:60

E-26

DIST	COUNTY	ROUTE	KILOMETER POST TOTAL PROJECT	SHEET No	TOTAL SHEETS
04	Ala	80	1.6/2.7	397 R1	643

REGISTERED ELECTRICAL ENGINEER 05/15/06 DATE
1-29-07
PLANS APPROVAL DATE

REGISTERED PROFESSIONAL ENGINEER JENS ERLINGSSON No. 8249 Exp. 9/30/08 ELECTRICAL STATE OF CALIFORNIA

PB POWER, Inc.
A Parsons Brinckerhoff Company
303 Second St., Suite 700N
San Francisco, CA 94107-1317

The State of California or its officers or agents shall not be responsible for the accuracy or completeness of electronic copies of this plan sheet.

To get to the Caltrans web site, go to: http://www.dot.ca.gov

REGISTERED PROFESSIONAL ENGINEER FADI WALIEDDINE No. 11465 Exp. 12/31/2009 ELECTRICAL STATE OF CALIFORNIA

STATE OF CALIFORNIA - DEPARTMENT OF TRANSPORTATION
Caltrans

DESIGN OVERSIGHT
BEHZAD GOLEMOHAMMADI

CALCULATED/DESIGNED BY FK
CHECKED BY AB

DATE	REVISED BY
2/06	2/06
DATE	REVISED

LAST REVISION 00-00-00
DATE PLOTTED => 1/16/2009
TIME PLOTTED => 10:01:31 AM

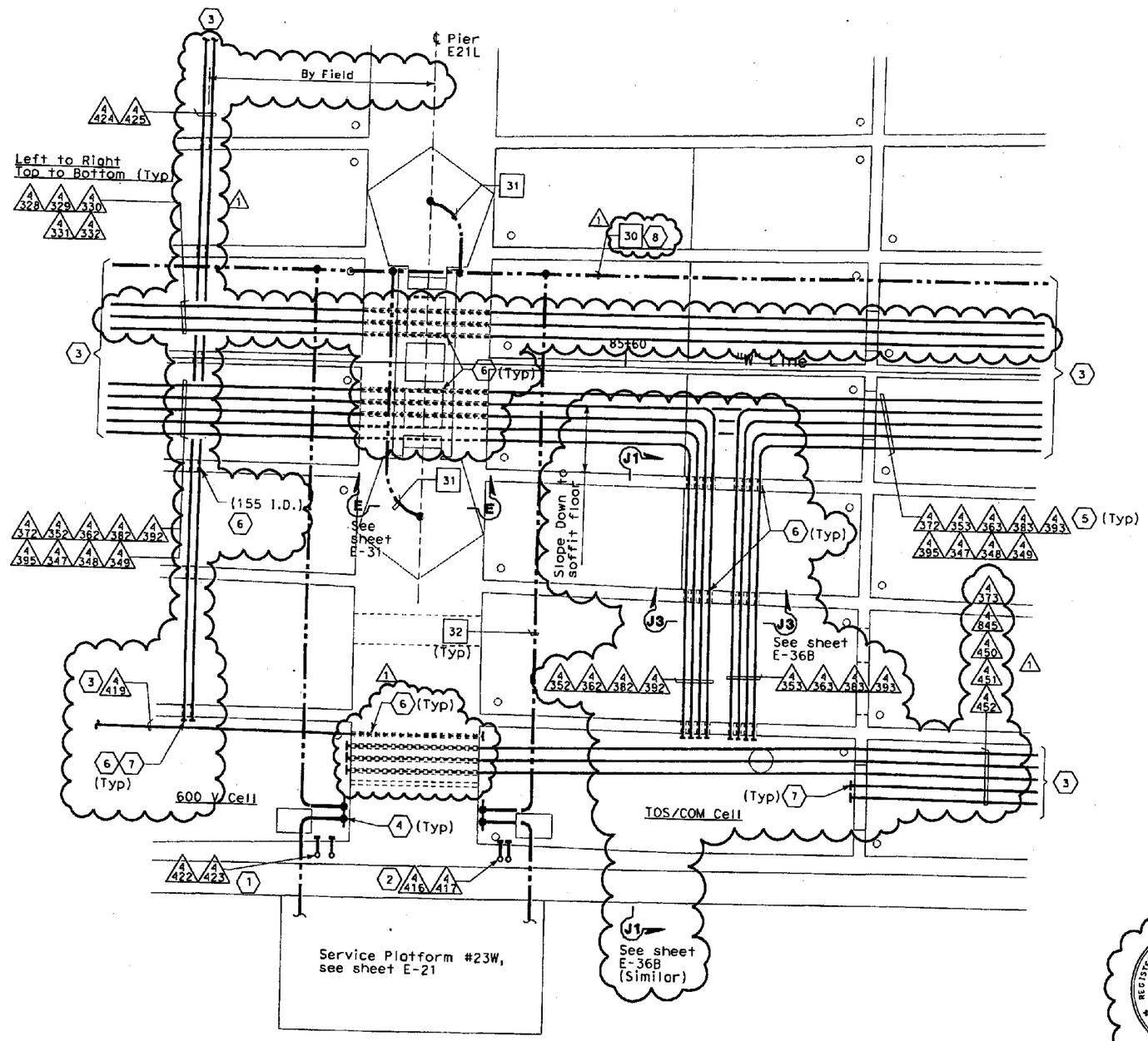

DETAIL 4 - PIER E21L

DIST	COUNTY	ROUTE	KILOMETER POST TOTAL PROJECT	SHEET No	TOTAL SHEETS
04	Ala	80	1.6/2.7	398 R1	643

REGISTERED ELECTRICAL ENGINEER 05/15/06 DATE

1-29-07
PLANS APPROVAL DATE

REGISTERED PROFESSIONAL ENGINEER JENS ERLINGSSON No. 8249 Exp. 9/30/08 ELECTRICAL STATE OF CALIFORNIA

PB POWER, Inc.
A Parsons Brinckerhoff Company
303 Second St., Suite 700N
San Francisco, CA 94107-1317

The State of California or its officers or agents shall not be responsible for the accuracy or completeness of electronic copies of this plan sheet.

To get to the Caltrans web site, go to: http://www.dot.ca.gov

Caltrans Metric

SHEET NOTES:

1. Conduit up to PB-LTG located in Barrier, see sheet E-12.
2. Conduit up to PB-COM located in barrier, see sheet E-12.
3. See sheet E-15 for continuation.
4. See Detail 1 on sheet E-43.
5. Refer to sheets E-33 for conduit support location. Refer to E-35 and E-36 drawings for conduit support details.
6. Provided with pipe sleeves for conduits.
7. Conduit end shall be provided with ground bushings. Bond all conduits with #2 awg bare copper wire, connected to the ground bar, see Detail 1, sheet E-43.
8. The system ground, #500 kcMIL shall be routed along the 15 kV conduit run or conduit as shown with U-bolts strap to the conduit.

NOTES:

1. References:
   - TOS equipment is shown for conduit routing only. For typical details of TOS controller and devices, see sheets starting at E-204.
   - For types of pull boxes, splice boxes and enclosures, see sheet E-44.
   - For overall grounding plan, see sheet E-42.
   - For conduit and cable tray schedules, see sheets starting at E-224.
2. ~~(*) Dimensions to be provided by Structure~~. DELETED
3. For overall plan of this area, see sheet E-15.
4. Once the conduits are installed on the 600 V and TOS/COM cells, Contractor to grout the conduit block outs.

REGISTERED PROFESSIONAL ENGINEER FADI WALIEDDINE No. 11465 Exp. 12/31/2009 ELECTRICAL STATE OF CALIFORNIA

MARK	DATE	DESCRIPTIONS	REV	CK	
1	01/15/09	Added pipe sleeves, sheet notes 6, 7, 8 and note 4. Relocated conduits. Revised note 2.	EJL	FSW	78/80
		REVISIONS			

CONTRACT CHANGE ORDER NO. 80
SHEET 8 OF 23 04-012064 1/22/09

DETAILS
ROADWAY AND GIRDER LEVEL WESTBOUND GIRDER CONDUIT INSTALLATION
SCALE 1:60

THIS PLAN ACCURATE FOR ELECTRICAL WORK ONLY.

STATE OF CALIFORNIA - DEPARTMENT OF TRANSPORTATION
Caltrans

DESIGN OVERSIGHT: BEHZAD GOLEMOHAMMADI

CALCULATED/DESIGNED BY	FK	DATE 2/06	REVISED BY	DATE REVISED
CHECKED BY	AB	2/06		

LAST REVISION 00-00-00 | DATE PLOTTED => 1/16/2009 | TIME PLOTTED => 10:02:22 AM

DIST	COUNTY	ROUTE	KILOMETER POST TOTAL PROJECT	SHEET NO	TOTAL SHEETS
04	Ala	80	1.6/2.7	399 R1	643

REGISTERED ELECTRICAL ENGINEER 05/15/06 DATE

1-29-07
PLANS APPROVAL DATE

REGISTERED PROFESSIONAL ENGINEER JENS ERLINGSSON No. 8249 Exp. 9/30/08 ELECTRICAL STATE OF CALIFORNIA

PB POWER, Inc.
A Parsons Brinckerhoff Company
303 Second St., Suite 700N
San Francisco, CA 94107-1317

The State of California or its officers or agents shall not be responsible for the accuracy or completeness of electronic copies of this plan sheet.

To get to the Caltrans web site, go to: http://www.dot.ca.gov

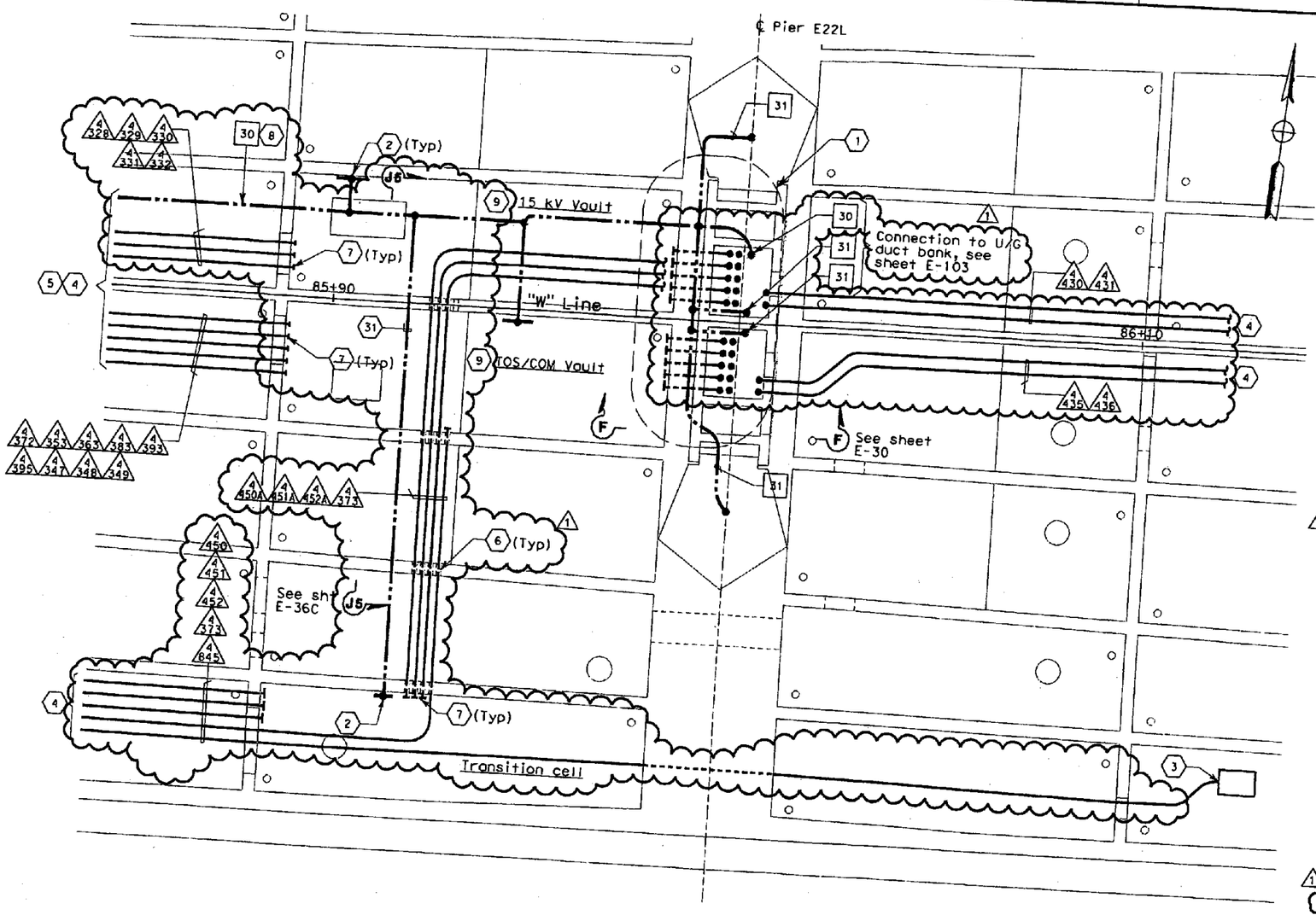

DETAIL 5 - PIER E22L CONDUIT PLAN

SHEET NOTES:

1. For Pier E22L conduit installation, see E-30.
2. See Detail 1 on sheet E-43.
3. Preformed Loops PL-W09 Splicebox PB-4D. See E-44.
4. See sheet E-15 for continuotion.
5. Refer to sheet E-34 for conduit support location. Refer to E-35 and E-36 drawings for conduit support details.
6. Provided with pipe sleeves for conduits.
7. Conduit end shall be provided with ground bushings. Bond all conduits with #2 awg bare copper wire, connected to the ground bar, see Detail 1, sheet E-43.
8. The system ground, #500 kcMIL shall be routed along the 15 kV conduit run or conduit as shown with U-bolts strap to the conduit.
9. The Contractor to provide non-removable warning sign above or before the girder and soffit access entry. The sign shall read "Caution - Authorized Personnel Only - Electricals Inside".

NOTES:

1. References:
   - TOS equipment is shown for conduit routing only. For typical details of TOS controller and devices, see sheets starting at E-204.
   - For types of pull boxes, splice boxes and enclosures, see sheet E-44.
   - For overall grounding plan, see sheet E-42.
   - For conduit and cable tray schedules, see sheets starting at E-224.
2. ~~(*) Dimensions to be provided by Structures.~~ DELETED
3. For overall plan of this area, see sheet E-15.
4. Once the conduits are installed on the TOS/COM, 15 kV vaults and Transition cell, Contractor to grout the conduit block outs.

REGISTERED PROFESSIONAL ENGINEER FADI WALIEDDINE No. 11465 Exp. 12/31/2009 ELECTRICAL STATE OF CALIFORNIA

MARK	DATE	DESCRIPTIONS	REV	CK	
1	01/15/09	Added pipe sleeves, sheet notes 6, 7,8,9 and note 4. Relocated conduits. Revised sheet note 5 and note 2.	EJL	FSW	78/80
		REVISIONS			

CONTRACT CHANGE ORDER NO. 80
SHEET 9 OF 23 04-012014 1/22/09

THIS PLAN ACCURATE FOR ELECTRICAL WORK ONLY.

DETAILS
ROADWAY AND GIRDER LEVEL WESTBOUND GIRDER CONDUIT INSTALLATION
SCALE 1:60

STATE OF CALIFORNIA - DEPARTMENT OF TRANSPORTATION
Caltrans
DESIGN OVERSIGHT
BEHZAD GOLEMOHAMMADI

CALCULATED/ DESIGNED BY	FK	DATE 2/06	REVISED BY
CHECKED BY	AB	2/06	DATE REVISED

DGN FILE =>T:\13103\MS\dsa\OTO-Contract 1\CCO\Electrical\CCO-80\Conduit rock & embedd struts\40120jun02Rc1.dgn

DATE PLOTTED => 1/16/2009
TIME PLOTTED => 10:04:14 AM

LAST REVISION 00-00-00

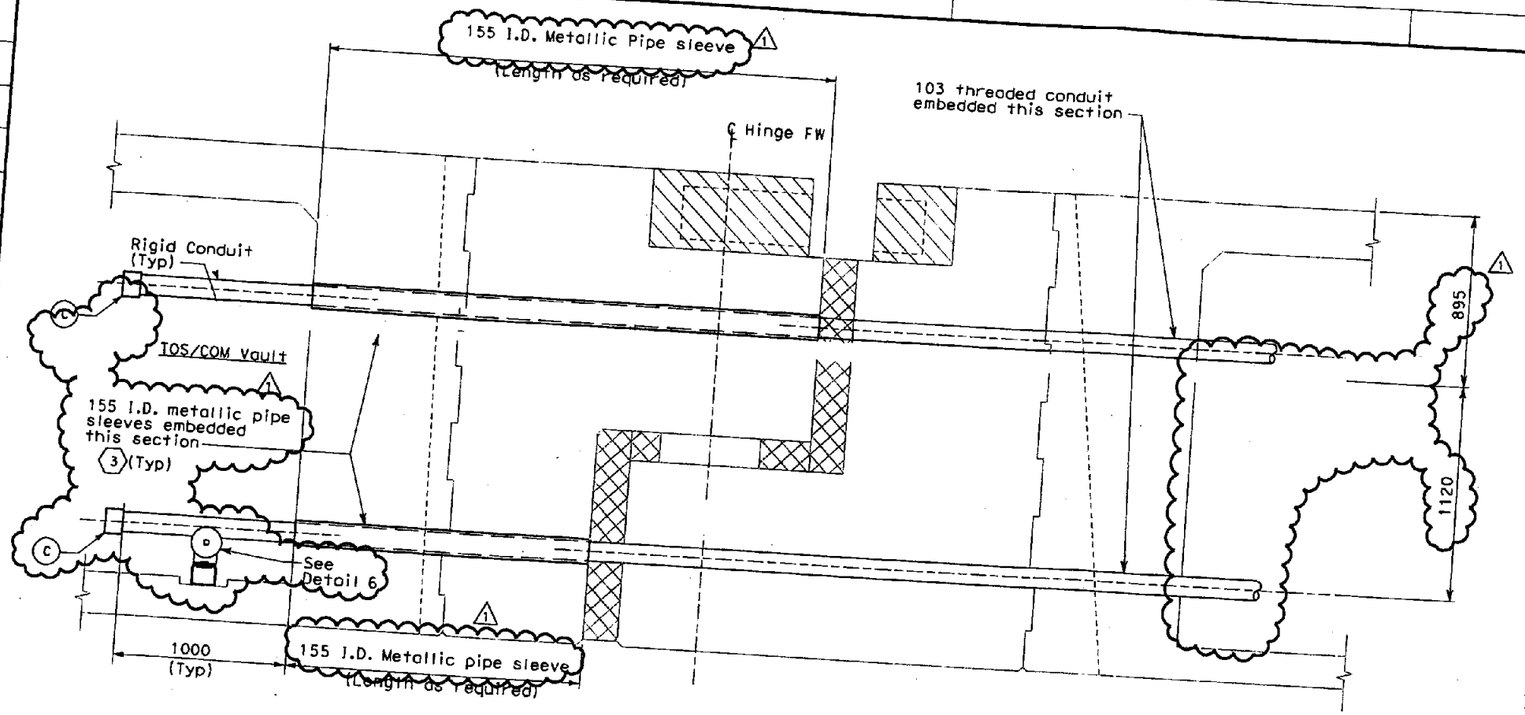

SECTION A-A
PIPE SLEEVE/CONDUIT THROUGH HINGE FW
SCALE 1:15

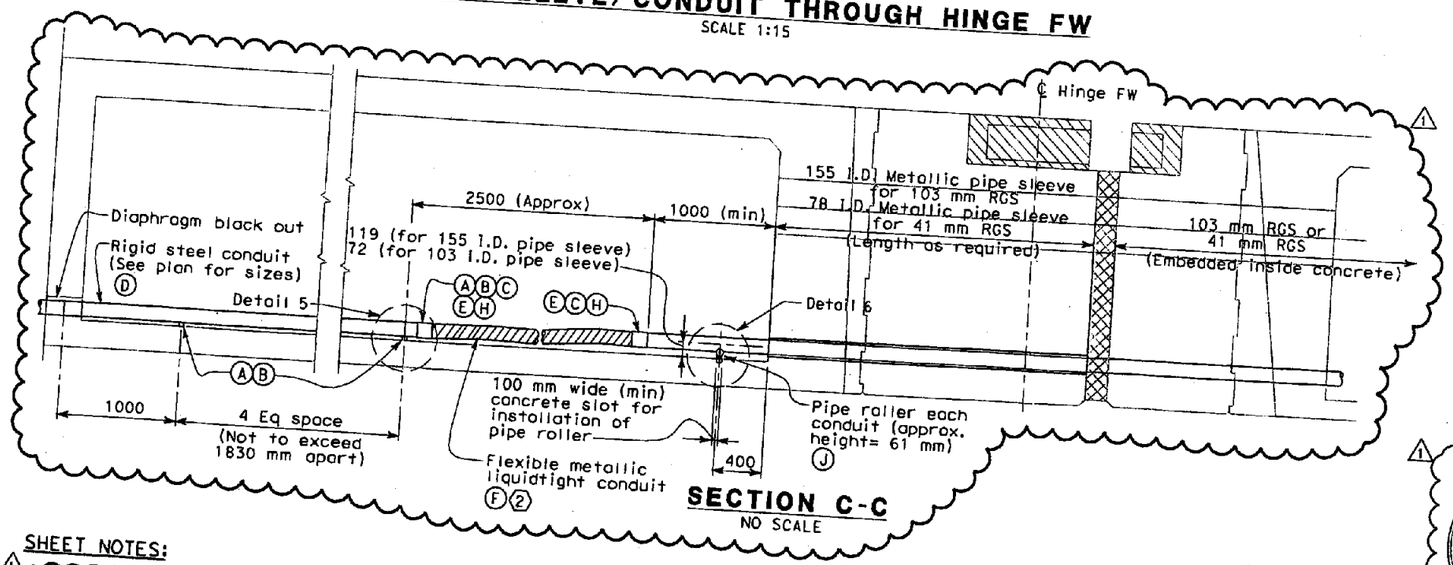

SECTION C-C
NO SCALE

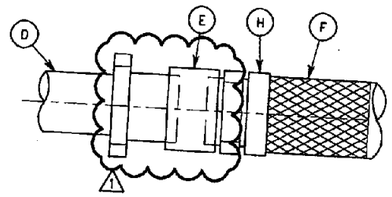

DETAIL 5
NO SCALE

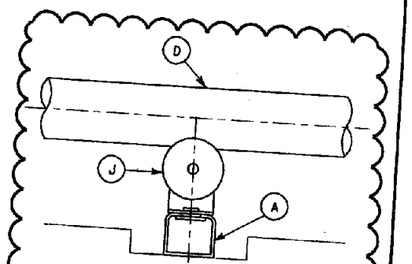

DETAIL 6
NO SCALE

MATERIAL LIST

Item No.	Description	Remarks
A	~~Vertical wall~~ Horizontal floor embedded strut channel	Length as required
B	U-Bolt, conduit clamp for 103C	
C	Conduit coupling, ~~103C~~ with grounding bushing	
D	Galvanized rigid conduit, ~~103C~~	Length as required
E	Connector, straight liquidtight flexible conduit ~~for 103C~~	
F	Liquidtight flexible conduit, ~~103C~~	2500 (Approx)
~~G~~	~~42 mm Strut channel (Length as required)~~	Deleted
H	Strain relief grips for flexible conduit, ~~103C~~	Required both ends
J	Pipe Roller	
~~K~~	~~Adjustable brace fittings~~	Deleted

SHEET NOTES:

1. For conduit support details, see sheet E-35 and E-36. Deleted
2. Arrange conduit supports and flexible conduit to provide for minimum 520 mm horizontal movement. Flexible conduit may rest on vault floor.
3. For Hinge FW expansion joint displacement, details, sleeve location and dimensions, see Structures Westbound Hinge FW detail sheets.

NOTES:

1. ~~* Dimensions to be provided by Structures.~~ Deleted
2. See plan drawing, sheet E-26.

MARK	DATE	DESCRIPTIONS	REV	CK	CCO
1	01/15/09	Changed pipe sleeve sizes and location of conduits. Revised Section A-A and C-C Detail 5. Deleted sheet note 1. Added Detail 6. Revised note 1.	EJL	FSW	78/80

REVISIONS

CONTRACT CHANGE ORDER NO. 80
SHEET 10 OF 23 04-012044 1/22/09

DETAILS
ROADWAY AND GIRDER LEVEL WESTBOUND HINGE FW CONDUIT INSTALLATION
SCALE AS NOTED

ALL DIMENSIONS ARE IN MILLIMETERS UNLESS OTHERWISE SHOWN

DIST	COUNTY	ROUTE	KILOMETER POST TOTAL PROJECT	SHEET No	TOTAL SHEETS
04	Ala	80	1.6/2.7	400 R1	643

REGISTERED ELECTRICAL ENGINEER 05/15/06 DATE
1-29-07
PLANS APPROVAL DATE

REGISTERED PROFESSIONAL ENGINEER JENS ERLINGSSON No. 8249 Exp. 9/30/08 ELECTRICAL STATE OF CALIFORNIA

PB POWER, Inc.
A Parsons Brinckerhoff Company
303 Second St., Suite 700N
San Francisco, CA 94107-1317

The State of California or its officers or agents shall not be responsible for the accuracy or completeness of electronic copies of this plan sheet.

To get to the Caltrans web site, go to: http://www.dot.ca.gov

REGISTERED PROFESSIONAL ENGINEER FADI MALIEDDINE No. 11465 Exp. 12/31/2009 ELECTRICAL STATE OF CALIFORNIA

	DATE	REVISED BY	DATE	CALCULATED/DESIGNED BY	FK	2/06
				CHECKED BY	AB	2/06

DESIGN OVERSIGHT
BEHZAD GOLEMOHAMMADI

STATE OF CALIFORNIA - DEPARTMENT OF TRANSPORTATION
Caltrans

LAST REVISION 00-00-00
DATE PLOTTED => 1/16/2009
TIME PLOTTED => 10:06:25 AM

SHEET NOTES:

1. Cable tray support, wall mounted.
2. For continuation, see conduit layout plan, refer to sheet E-15.
3. Conduit end shall be provided with ground bushings. Bond all conduits with #2 awg bare copper wire, connected to the ground bar, see Detail 1, sheet E-43.
4. For continuation, see sheet E-81.
5. ~~All embedded conduit location, arrangement and dimensions shall be provided on Structural Plans.~~ Rigid steel conduit elbows shall be 610 mm minimum radius.

NOTES:

1. Reference:
   - For typical pull boxes and enclosures, see sheet E-44.
2. ~~* Dimensions to be provided by Structural~~ DELETED

Caltrans Metric

DIST	COUNTY	ROUTE	KILOMETER POST TOTAL PROJECT	SHEET No	TOTAL SHEETS
04	Alo	80	1.6/2.7	401 R1	643

REGISTERED ELECTRICAL ENGINEER 05/15/06 DATE

1-29-07
PLANS APPROVAL DATE

REGISTERED PROFESSIONAL ENGINEER JENS ERLINGSSON No. 8249 Exp. 9/30/08 ELECTRICAL STATE OF CALIFORNIA

PB POWER, Inc.
A Parsons Brinckerhoff Company
303 Second St., Suite 700N
San Francisco, CA 94107-1317

The State of California or its officers or agents shall not be responsible for the accuracy or completeness of electronic copies of this plan sheet.

To get to the Caltrans web site, go to: http://www.dot.ca.gov

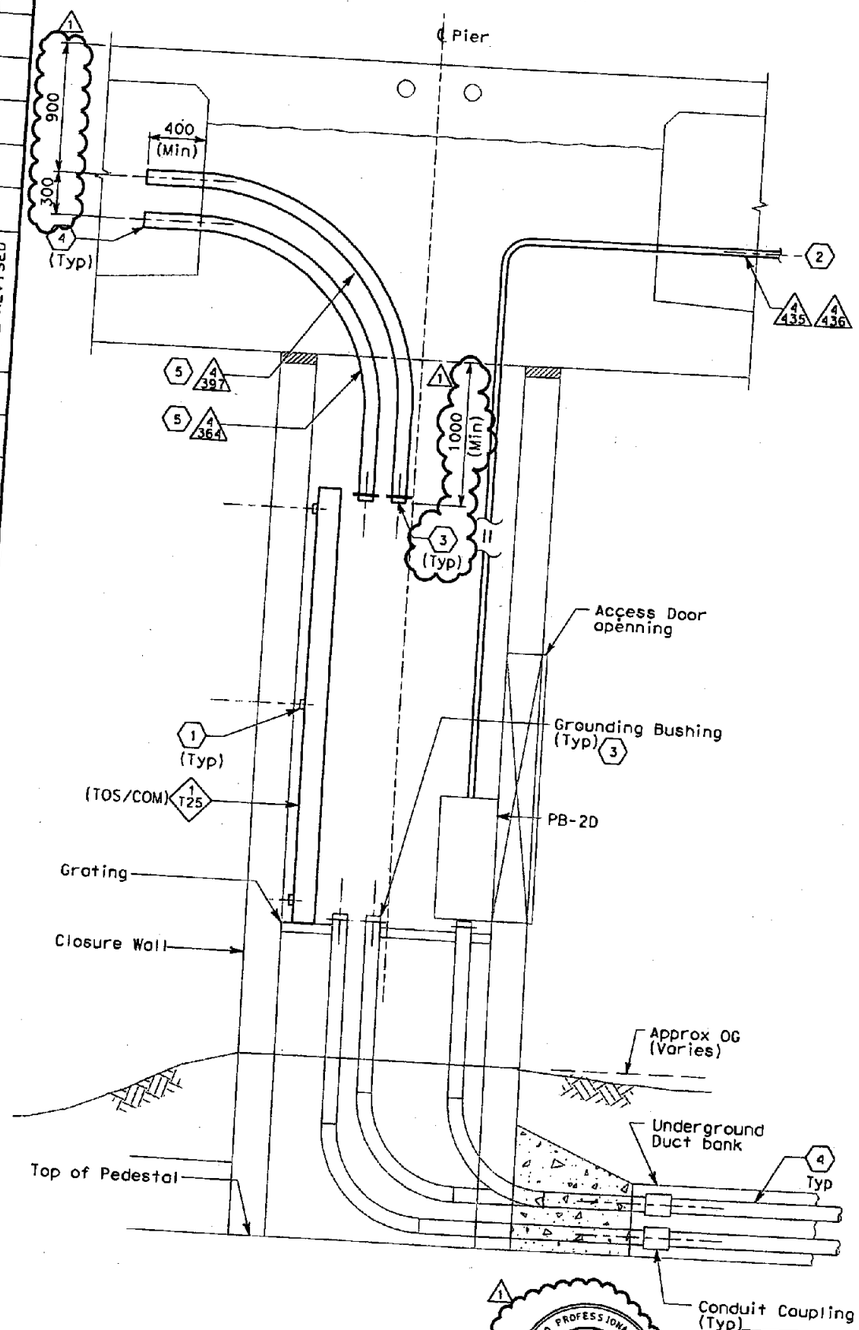

SECTION F-F
PIER E22L

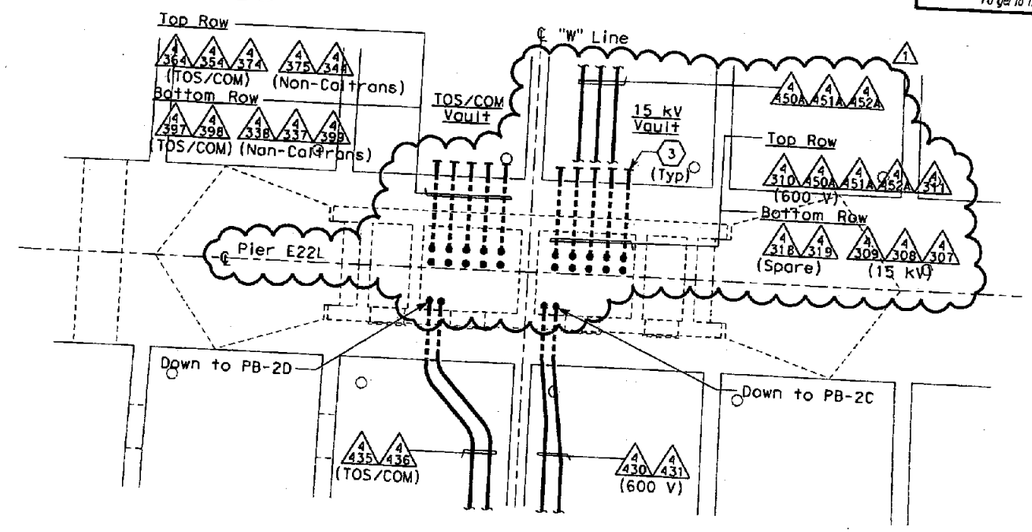

PIER E22L- GIRDER
(CONDUIT PLAN)
SCALE 1:50

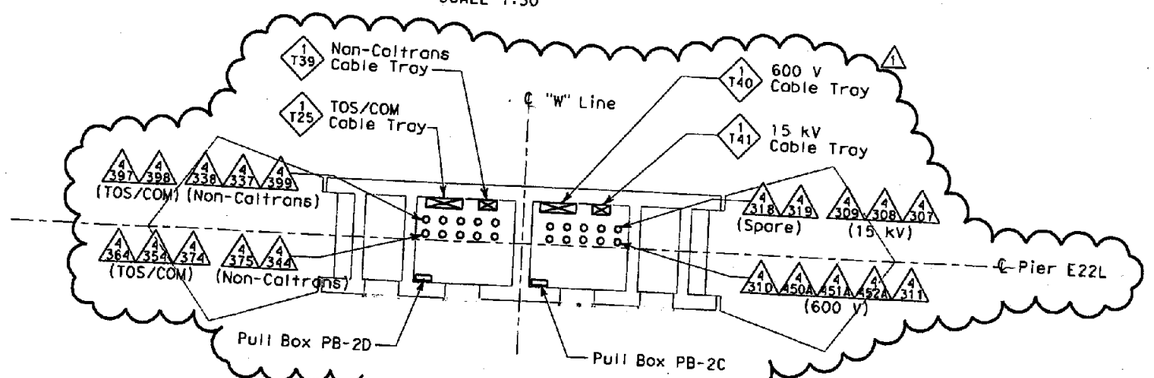

PIER E22L- PLAN
(INSIDE PIER)
SCALE 1:50

DETAILS
ROADWAY AND GIRDER LEVEL WESTBOUND PIER CONDUIT INSTALLATION
SCALE 1:20

REGISTERED PROFESSIONAL ENGINEER FADI WALIEDDINE No. 11465 Exp. 12/31/2009 ELECTRICAL STATE OF CALIFORNIA

MARK	DATE	DESCRIPTIONS	REV	CK	
1	01/15/09	Relocated conduits. Revised section F-F, Pier E22L-Girder Conduit Plan, Sheet Notes 3 and 5 and Note 2. Added Pier E22L-plan inside pier.	EJL	FSW	80

REVISIONS

CONTRACT CHANGE ORDER NO. 80
SHEET 11 OF 23 04-012014 1/22/09

ALL DIMENSIONS ARE IN MILLIMETERS UNLESS OTHERWISE SHOWN

THIS PLAN ACCURATE FOR ELECTRICAL WORK ONLY.

STATE OF CALIFORNIA - DEPARTMENT OF TRANSPORTATION
Caltrans

DESIGN OVERSIGHT
BEHZAD GOLEMOHAMMADI

CALCULATED/DESIGNED BY FK
CHECKED BY AB
DATE 2/06
REVISED BY
DATE REVISED

DGN FILE =>T:\13103\MS\bse\OTD-Contract 1\CCO\Electrical\CCO-80\Conduit rack & embedd struts\401201ua030r1.dgn

LAST REVISION 00-00-00
DATE PLOTTED => 1/14/2009
TIME PLOTTED => 4:38:49 PM

DIST	COUNTY	ROUTE	KILOMETER POST TOTAL PROJECT	SHEET No	TOTAL SHEETS
04	Ala	80	1.6/2.7	402 R1	643

REGISTERED ELECTRICAL ENGINEER 05/15/06 DATE

1-29-07
PLANS APPROVAL DATE

REGISTERED PROFESSIONAL ENGINEER JENS ERLINGSSON No. 8249 Exp. 9/30/08 ELECTRICAL STATE OF CALIFORNIA

PB POWER, Inc.
A Parsons Brinckerhoff Company
303 Second St., Suite 700N
San Francisco, CA 94107-1317

The State of California or its officers or agents shall not be responsible for the accuracy or completeness of electronic copies of this plan sheet.

To get to the Caltrans web site, go to: http://www.dot.ca.gov

Caltrans Metric

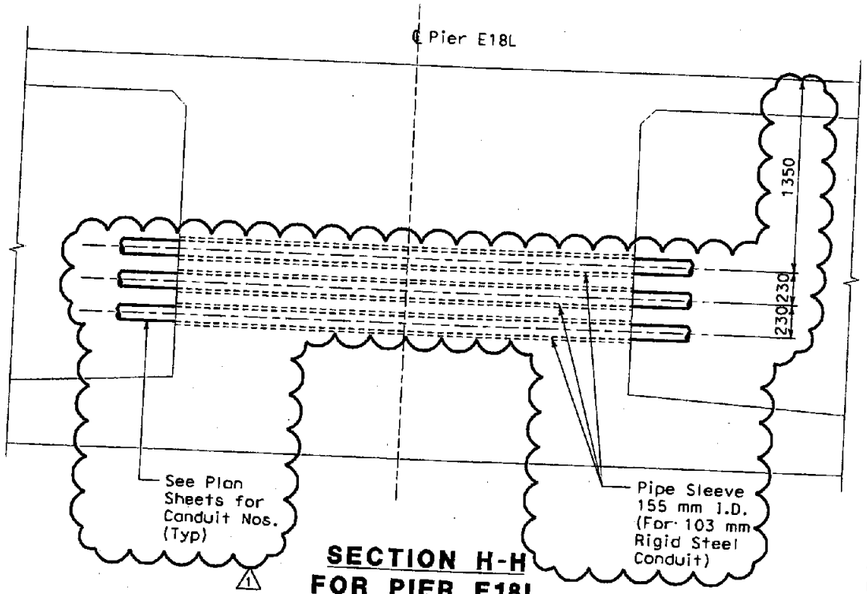

SECTION H-H
FOR PIER E18L
(SIMILAR FOR PIER E19L)
SCALE 1:20

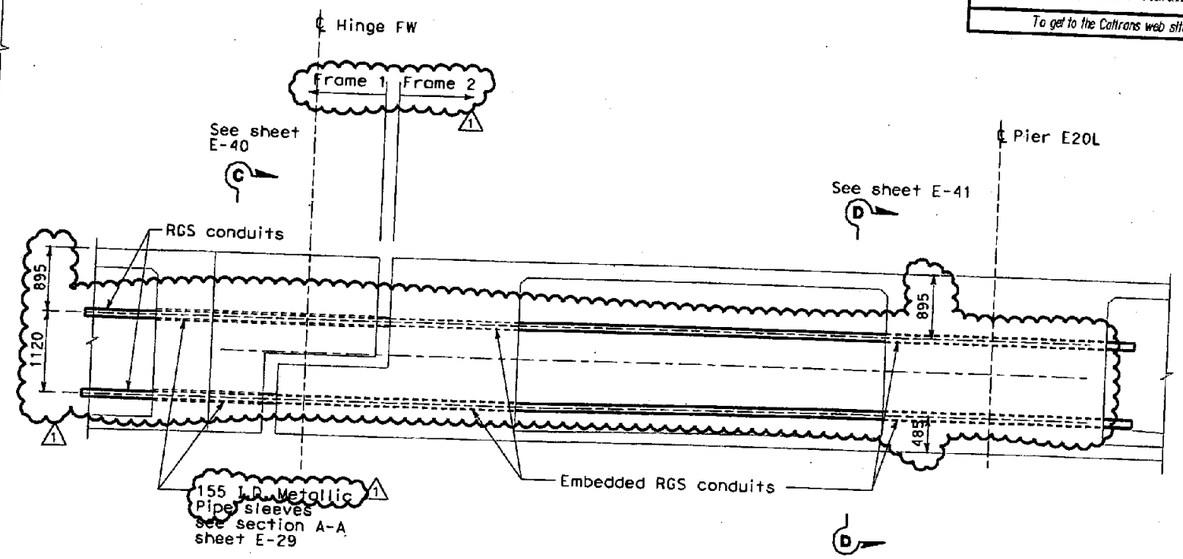

SECTION G-G
HINGE FW AND PIER E20L
CONDUIT INTERFACE
SCALE 1:40

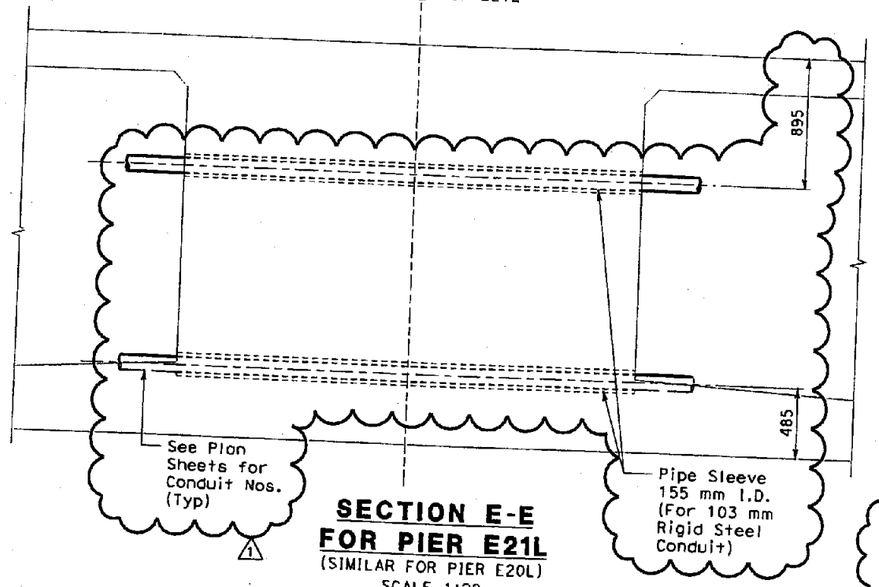

SECTION E-E
FOR PIER E21L
(SIMILAR FOR PIER E20L)
SCALE 1:20

NOTES:

1. Reference:
   - For plan where section E-E is taken, see sheet E-27.
   - For plan where section H-H is taken, see sheet E-25.

SHEET NOTES:

1 ~~(1) For Conduit Layout Plan, refer to Sheet E-25.~~ Deleted.

(2) For conduit layout plan, refer to sheet E-27.

1 ~~(3) * Dimensions to be provided by Structural.~~ Deleted.

REGISTERED PROFESSIONAL ENGINEER FADI WALIEDDINE No. 11465 Exp. 12/31/2009 ELECTRICAL STATE OF CALIFORNIA

MARK	DATE	DESCRIPTIONS	REV	CK	CCO
1	01/15/09	Revised conduit location and sheet notes 1 and 3. Added pipe sleeves.	EJL	FSW	78/80
		REVISIONS			

CONTRACT CHANGE ORDER NO. 80
SHEET 12 OF 23 04-012014 1/22/09

DETAILS
ROADWAY AND GIRDER LEVEL WESTBOUND PIER CONDUIT INSTALLATION
SCALE AS NOTED

STATE OF CALIFORNIA - DEPARTMENT OF TRANSPORTATION
Caltrans

DESIGN OVERSIGHT
BEHZAD GOLEMOHAMMADI

CALCULATED/DESIGNED BY FK
CHECKED BY AB

DATE	REVISED BY	DATE	REVISED
2/06		2/06	

THIS PLAN ACCURATE FOR ELECTRICAL WORK ONLY.

ALL DIMENSIONS ARE IN MILLIMETERS UNLESS OTHERWISE SHOWN

0 20 40 60 80

DGN FILE => T:\13103\MS\pse\DTD-Contract 1\CCO\Electrical\CCO-80\Conduit rack & embedd struts\401201ua031r1.dgn

DATE PLOTTED => 1/14/2009
TIME PLOTTED => 2:12:49 PM

LAST REVISION 00-00-00

DIST	COUNTY	ROUTE	KILOMETER POST TOTAL PROJECT	SHEET No	TOTAL SHEETS
04	Ala	80	1.6/2.7	403 R1	643

REGISTERED ELECTRICAL ENGINEER 05/15/06 DATE

1-29-07
PLANS APPROVAL DATE

REGISTERED PROFESSIONAL ENGINEER JENS ERLINGSSON No. 8249 Exp. 9/30/08 ELECTRICAL STATE OF CALIFORNIA

PB POWER, Inc.
A Parsons Brinckerhoff Company
303 Second St., Suite 700N
San Francisco, CA 94107-1317

The State of California or its officers or agents shall not be responsible for the accuracy or completeness of electronic copies of this plan sheet.

To get to the Caltrans web site, go to: http://www.dot.ca.gov

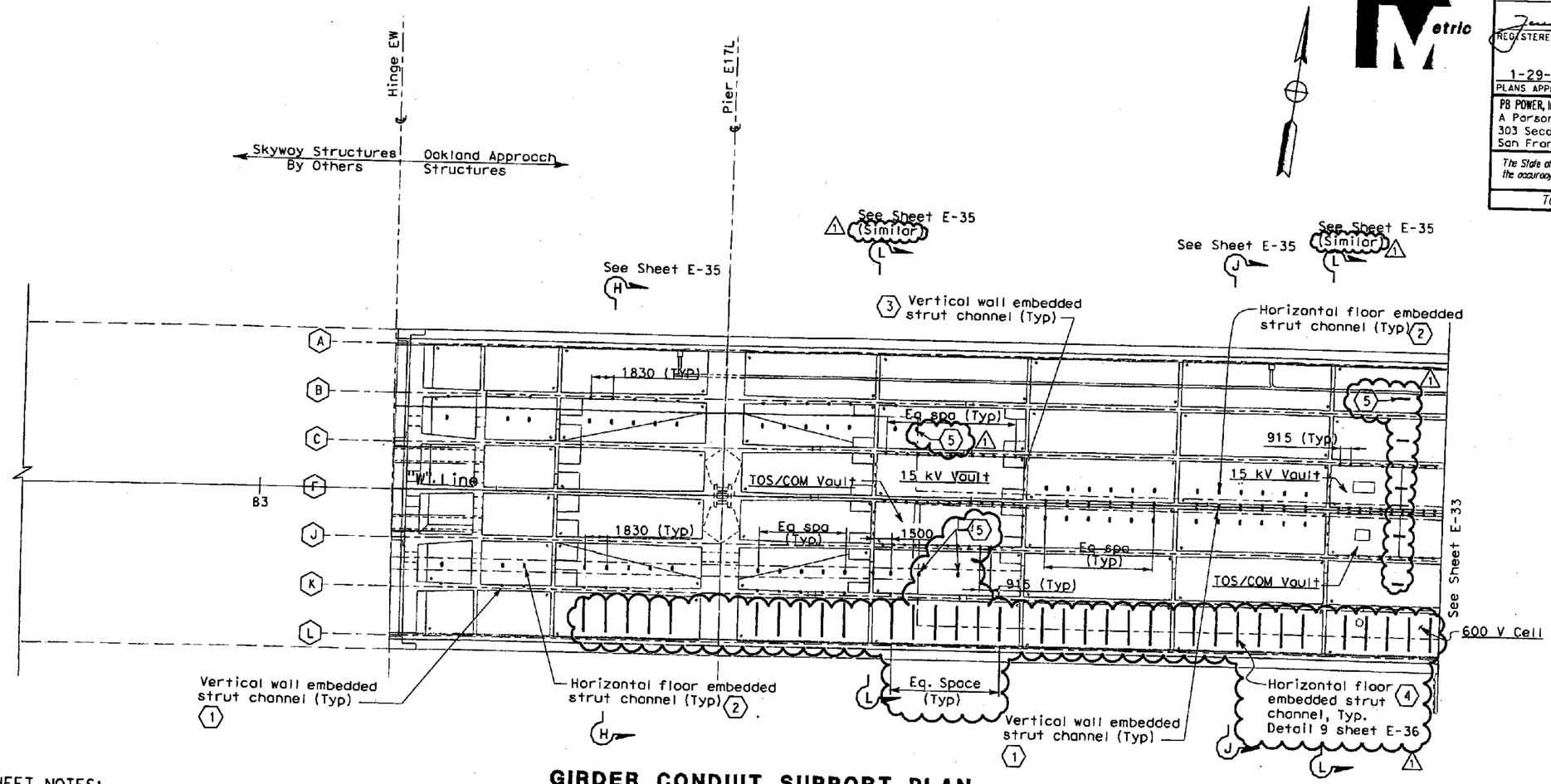

GIRDER CONDUIT SUPPORT PLAN

SHEET NOTES:

1. Install embedded vertical strut channel between intermediate diaphragms in girder wall.
2. Install embedded horizontal strut channel between intermediate diaphragms in girder floor.
3. Install embedded vertical strut channel in all utility vaults.
4. Embedded strut channel shall be spaced not to exceed 1830 apart. 1
5. Field Contractor to add strut channel mounted at the soffit floor for conduit support . Location shall correspond to conduit location of sheet E-13.

NOTES:

1. Contractor shall field adjust location of strut channel inserts to avoid interference with bridge reinforcement, conflicts to stuctures access and openings.
2. Strut channel location shall correspond to conduit plan as shown on sheets starting at E-13 and Structural Drawings.

REGISTERED PROFESSIONAL ENGINEER FADI WALIEDDINE No. 11465 Exp. 12/31/2009 ELECTRICAL STATE OF CALIFORNIA

MARK	DATE	DESCRIPTIONS	REV	CK	CCO
1	01/15/09	Deleted wall embed strut at Girder K south wall. Added floor embed strut and sheet notes 4 and 5.	EJL	FSW	80
		REVISIONS			

CONTRACT CHANGE ORDER NO. 80
SHEET 13 OF 23 — C4-01206-4 1/22/09

DETAILS
ROADWAY AND GIRDER LEVEL WESTBOUND EMBEDDED CONCRETE INSERT CHANNEL
SCALE 1:200

THIS PLAN IS ACCURATE FOR ELECTRICAL WORK ONLY.

ALL DIMENSIONS ARE IN MILLIMETERS UNLESS OTHERWISE SHOWN

E-32

	DATE	REVISED BY
CALCULATED/DESIGNED BY	FK	2/06
CHECKED BY	AB	2/06

DESIGN OVERSIGHT
BEHZAD GOLEMOHAMMADI

STATE OF CALIFORNIA - DEPARTMENT OF TRANSPORTATION
Caltrans

DATE PLOTTED => 1/16/2009
TIME PLOTTED => 10:16:02 AM

LAST REVISION 00-00-00

DGN FILE =>T:\13103\MS\pse\OTD-Contract 1\CCO\Electrical\CCO-80\Conduit rack & embedd struts\40120tuc032r1.dgn

DIST	COUNTY	ROUTE	KILOMETER POST TOTAL PROJECT	SHEET NO	TOTAL SHEETS
04	Ala	80	1.6/2.7	404 R1	643

REGISTERED ELECTRICAL ENGINEER 05/15/06 DATE

1-29-07
PLANS APPROVAL DATE

REGISTERED PROFESSIONAL ENGINEER JENS ERLINGSSON No. 8249 Exp. 9/30/08 ELECTRICAL STATE OF CALIFORNIA

PB POWER, Inc.
A Parsons Brinckerhoff Company
303 Second St., Suite 700N
San Francisco, CA 94107-1317

The State of California or its officers or agents shall not be responsible for the accuracy or completeness of electronic copies of this plan sheet.

To get to the Caltrans web site, go to: http://www.dot.ca.gov

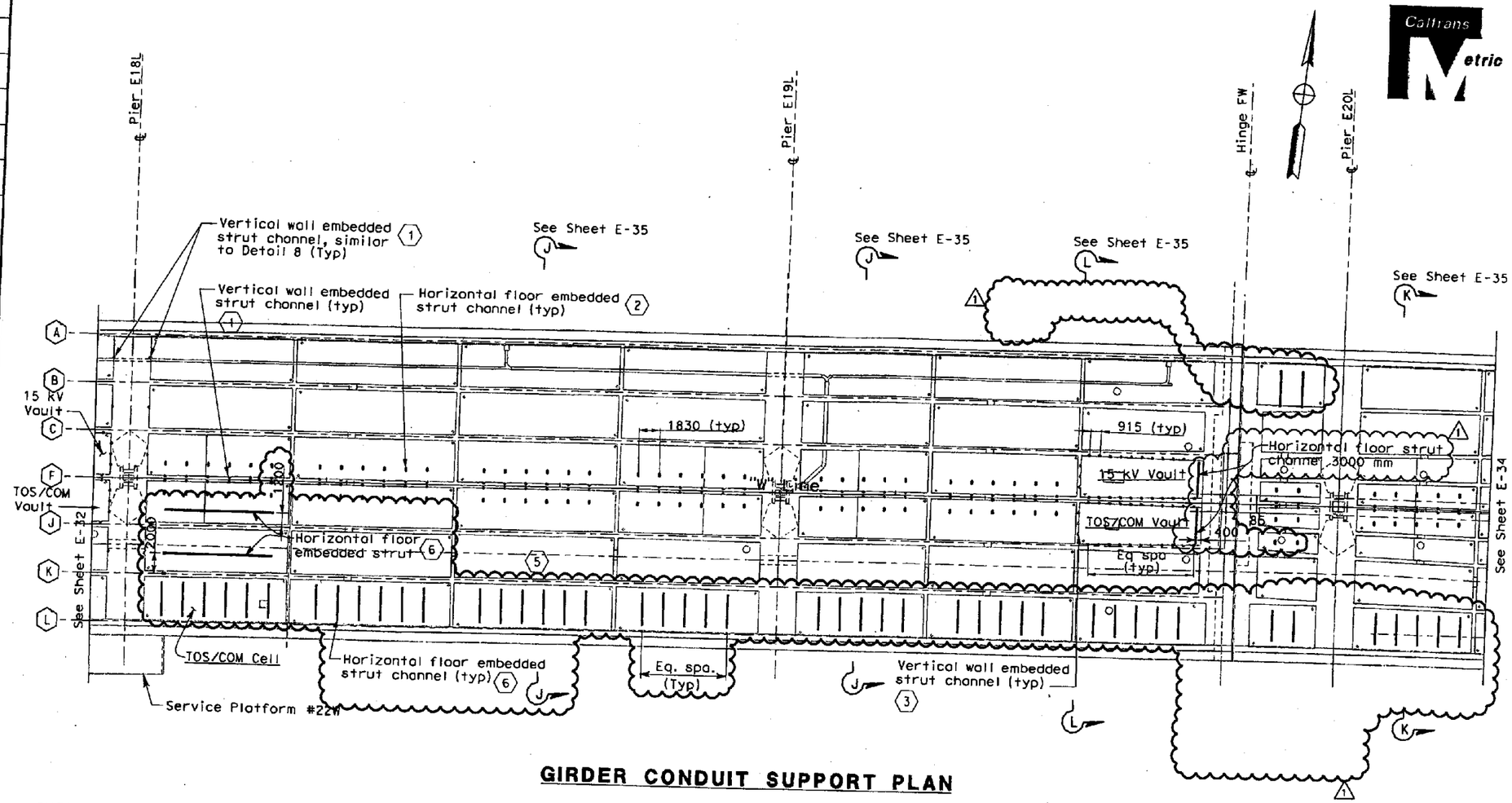

GIRDER CONDUIT SUPPORT PLAN

SHEET NOTES:

1. Install embedded vertical strut channel between intermediate diophragms in girder wall.
2. Install embedded horizontal strut channel between intermediate diophragms in girder floor.
3. Install embedded vertical strut channel in all utility vaults.
4. See Section C-C, sheet E-29.
5. See Detail 10, sheet E-36.
6. Embedded strut channel shall be spaced not to exceed 1830 apart. 1

NOTES:

1. Contractor shall field adjust location of strut channel inserts to avoid interferences with bridge reinforcement, conflicts to structures access and openings.
2. Strut channel location shall correspond to conduit plan as shown on sheets starting at E-13 and Structural Drawings.

REGISTERED PROFESSIONAL ENGINEER FADI WALIEDDINE No. 11465 Exp. 12/31/2009 ELECTRICAL STATE OF CALIFORNIA

MARK	DATE	DESCRIPTIONS	REV	CK	CCO
1	01/15/09	Deleted wall embed strut at Girder K east wall. Added floor embed strut and sheet note 6.	EJL	FSW	80

REVISIONS

CONTRACT CHANGE ORDER NO. 80
SHEET 14 OF 23 _ 04-C120L4 1/22/09

DETAILS
ROADWAY AND GIRDER LEVEL WESTBOUND EMBEDDED CONCRETE INSERT CHANNEL
SCALE 1:200

THIS PLAN IS ACCURATE FOR ELECTRICAL WORK ONLY.

ALL DIMENSIONS ARE IN MILLIMETERS UNLESS OTHERWISE SHOWN

E-33

DATE	REVISED BY	DATE REVISED
2/06	FK	2/06

CALCULATED/DESIGNED BY FK
CHECKED BY AB

DESIGN OVERSIGHT
BEHZAD GOLEMOHAMMADI

STATE OF CALIFORNIA - DEPARTMENT OF TRANSPORTATION
Caltrans

LAST REVISION 00-00-00
DATE PLOTTED => 1/16/2009
TIME PLOTTED => 10:17:58 AM

DGN FILE =>T:\13103\MS\pse\DTD-Contract 1\CCO\Electrical\CCO-80\Conduit rack & embedd struts\401201uc033r1.dgn

DIST	COUNTY	ROUTE	KILOMETER POST TOTAL PROJECT	SHEET NO	TOTAL SHEETS
04	Ala	80	1.6/2.7	405 R1	643

REGISTERED ELECTRICAL ENGINEER — DATE 05/15/06

1-29-07
PLANS APPROVAL DATE

REGISTERED PROFESSIONAL ENGINEER — JENS ERLINGSSON No. 8249 Exp. 9/30/08 ELECTRICAL — STATE OF CALIFORNIA

PB POWER, Inc.
A Parsons Brinckerhoff Company
303 Second St., Suite 700N
San Francisco, CA 94107-1317

The State of California or its officers or agents shall not be responsible for the accuracy or completeness of electronic copies of this plan sheet.

To get to the Caltrans web site, go to: http://www.dot.ca.gov

Caltrans Metric

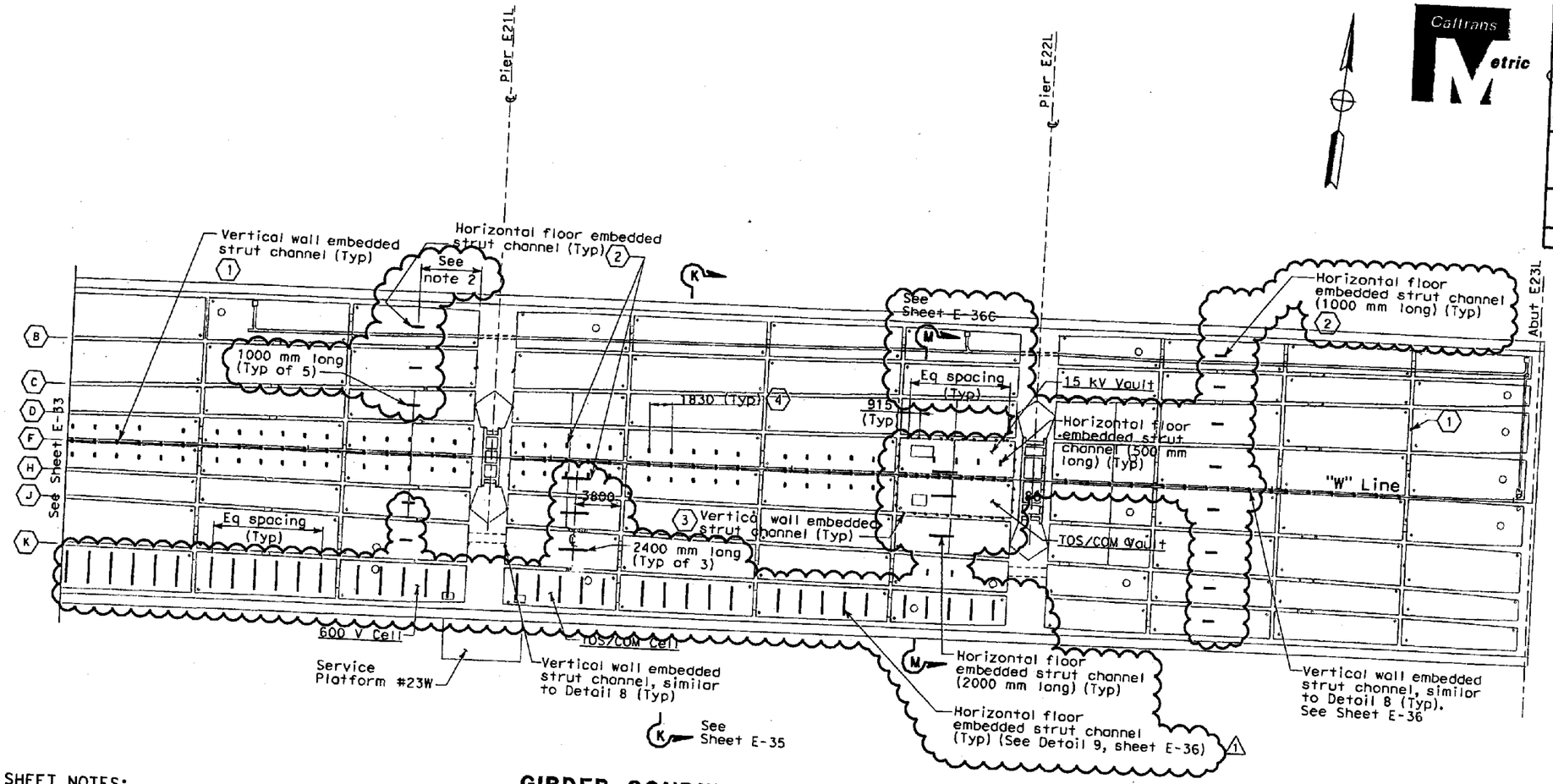

GIRDER CONDUIT SUPPORT PLAN

SHEET NOTES:

1. Install vertical embedded strut channel between intermediate diaphragms in girder wall.
2. Install horizontal embedded strut channel between intermediate diaphragms in girder floor.
3. Install vertical embedded strut channel in all utility vaults.
4. Embedded strut channel shall be spaced not to exceed 1830 apart. △1

NOTES:

1. Contractor shall field adjust location of concrete inserts to avoid interference with bridge reinforcement, conflicts to structures access and openings.
2. Strut channel location shall correspond to conduit plan as shown on sheets starting at E-13 and Structural Drawings.

REGISTERED PROFESSIONAL ENGINEER — FADI WALIEDDINE No. 11465 Exp. 12/31/2009 ELECTRICAL — STATE OF CALIFORNIA

△1

MARK	DATE	DESCRIPTIONS	REV	CK	CCO
△1	01/15/09	Deleted wall embed strut at Girder K south wall. Added floor embed strut, revised sheet notes 4.	EJL	FSW	80

REVISIONS

CONTRACT CHANGE ORDER NO. 80
SHEET 15 OF 23 04-012014 1/22/09

DETAILS
ROADWAY AND GIRDER LEVEL WESTBOUND EMBEDDED CONCRETE INSERT CHANNEL
SCALE 1:200

THIS PLAN IS ACCURATE FOR ELECTRICAL WORK ONLY.

ALL DIMENSIONS ARE IN MILLIMETERS UNLESS OTHERWISE SHOWN

0 20 40 60 80

DGN FILE => T:\13103\MS\pse\DTD-Contract 1\CCO\Electrical\CCO-80\Conduit rack & embedd struts\k01201ua034r1.dgn

E-34

DATE	REVISED BY	DATE	REVISED BY
2/06	FK	2/06	AB

CALCULATED/DESIGNED BY — CHECKED BY

DESIGN OVERSIGHT — BEHZAD GOLEMOHAMMADI

STATE OF CALIFORNIA - DEPARTMENT OF TRANSPORTATION — Caltrans

LAST REVISION 00-00-00 — DATE PLOTTED => 1/16/2009 — TIME PLOTTED => 10:18:49 AM

DIST	COUNTY	ROUTE	KILOMETER POST TOTAL PROJECT	SHEET No.	TOTAL SHEETS
04	Ala	80	1.6/2.7	406 R1	643

REGISTERED ELECTRICAL ENGINEER 05/15/06 DATE

1-29-07
PLANS APPROVAL DATE

PB POWER, Inc.
A Parsons Brinckerhoff Company
303 Second St., Suite 700N
San Francisco, CA 94107-1317

REGISTERED PROFESSIONAL ENGINEER JENS ERLINGSSON No. 8249 Exp. 9/30/08 ELECTRICAL STATE OF CALIFORNIA

The State of California or its officers or agents shall not be responsible for the accuracy or completeness of electronic copies of this plan sheet.

To get to the Caltrans web site, go to: http://www.dot.ca.gov

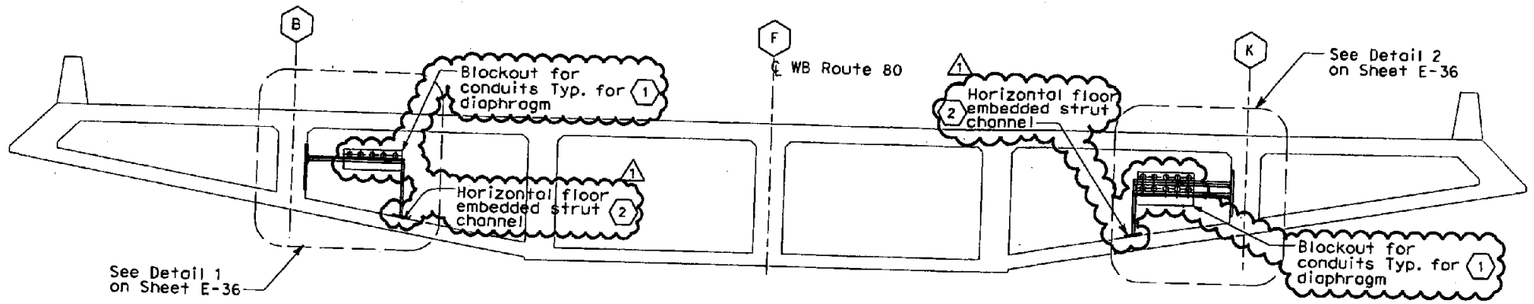

SECTION H-H

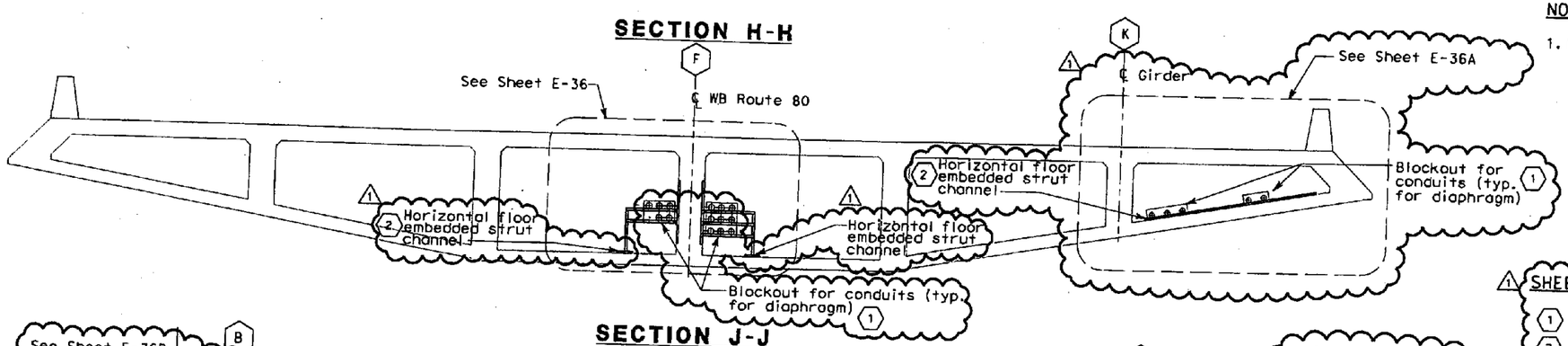

SECTION J-J

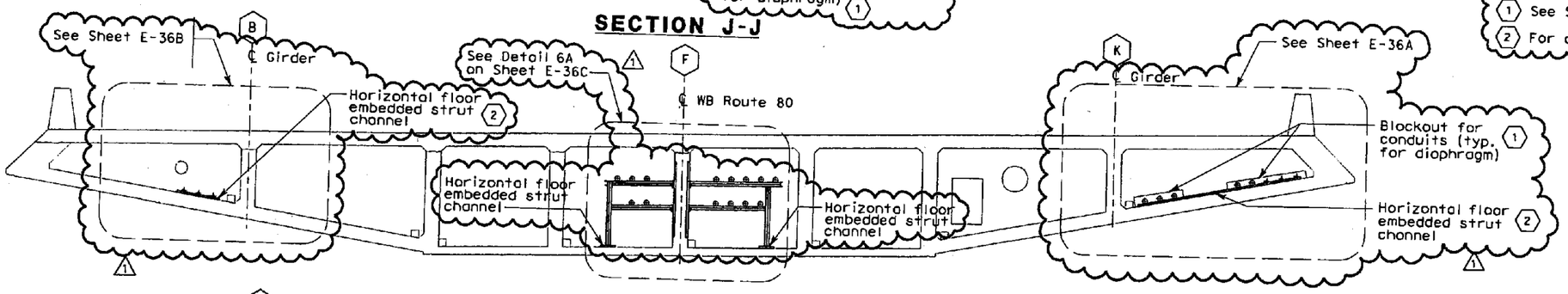

SECTION K-K

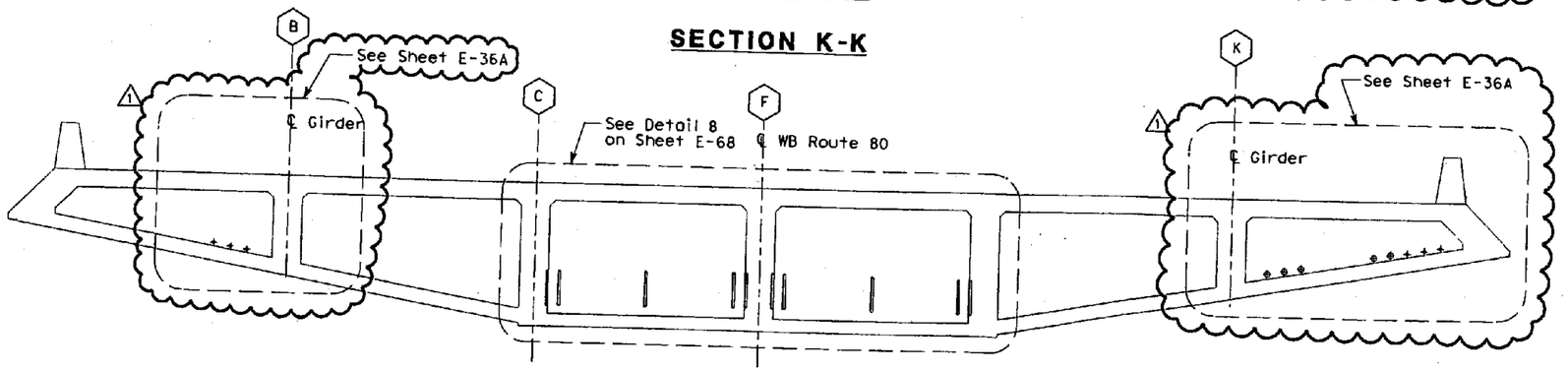

SECTION L-L

NOTES:

1. References:
   - For conduit layout plan, see sheets E-32 thru E-34.
   - For plan where Section H-H is taken, refer to sheet E-32.
   - For plan where Section J-J is taken, refer to sheets E-32 and E-33.
   - For plan where Section K-K is taken, refer to sheets E-33 and E-34.
   - For plan where Section L-L is taken, refer to sheets E-32 and E-33.
   - For typical wall and horizontal floor channel insert, see Detail 9 sheet E-36.

1 SHEET NOTES:

(1) See Structures Plan Sheets
(2) For details, See Detail 9 Sheet E-36

REGISTERED PROFESSIONAL ENGINEER FADI WALIEDDINE No. 11465 Exp. 12/31/2009 ELECTRICAL STATE OF CALIFORNIA

MARK	DATE	DESCRIPTIONS	REV	CK	CCO
1	01/15/09	Changed installation of horizontal floor embed strut channel. Revised Sections H-H, J-J, K-K and L-L.	EJL	FSW	80

REVISIONS

CONTRACT CHANGE ORDER NO. 80
SHEET 16 OF 23 04-0120L4 1/22/09

DETAILS
ROADWAY AND GIRDER LEVEL WESTBOUND GIRDER CONDUIT SUPPORTS
SCALE 1:50

E-35

STATE OF CALIFORNIA - DEPARTMENT OF TRANSPORTATION
Caltrans

DESIGN OVERSIGHT: BEHZAD COLEMOHAMMADI

CALCULATED/DESIGNED BY: FK — DATE 2/06 — REVISED BY
CHECKED BY: AB — 2/06 — DATE REVISED

DATE PLOTTED => 1/14/2009
TIME PLOTTED => 12:08:25 PM

LAST REVISION 00-00-00

DGN FILE =>T:\13103\MS\pse\OTD-Contract 1\CCO\Electrical\CCO-80 Conduit rack & embedd struts\40120lu0035r1.dgn

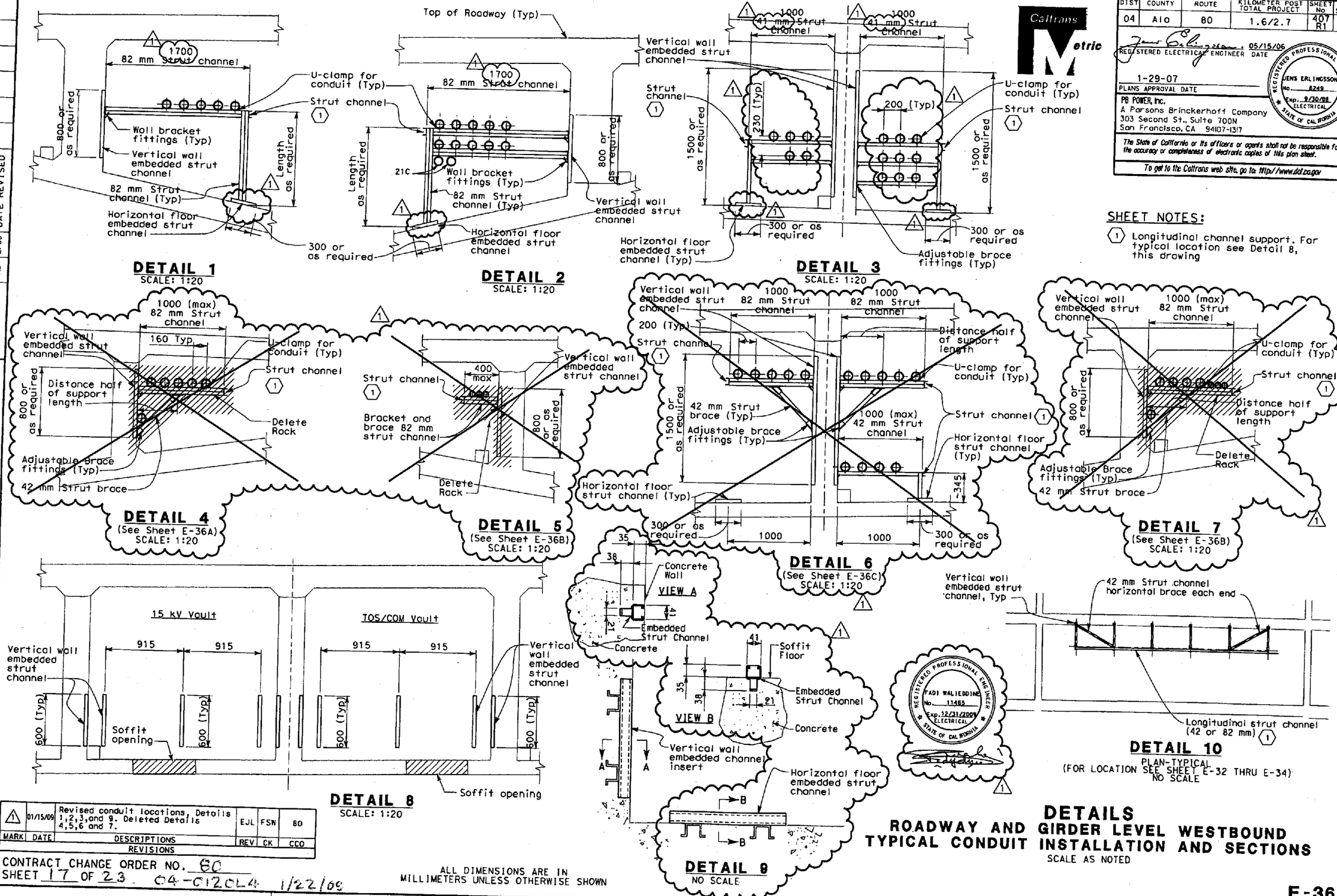

SHEET NOTES:

(1) Longitudinal channel support. For typical location see Detail 8, this drawing

MARK	DATE	DESCRIPTIONS	REV	CK	CCO
1	01/15/09	Revised conduit locations, Details 1,2,3,and 9. Deleted Details 4,5,6 and 7.	EJL	FSW	80

REVISIONS

CONTRACT CHANGE ORDER NO. 80
SHEET 17 OF 23 04-012014 1/22/09

ALL DIMENSIONS ARE IN MILLIMETERS UNLESS OTHERWISE SHOWN

DETAILS
ROADWAY AND GIRDER LEVEL WESTBOUND TYPICAL CONDUIT INSTALLATION AND SECTIONS
SCALE AS NOTED

E-36

DIST	COUNTY	ROUTE	KILOMETER POST TOTAL PROJECT	SHEET No	TOTAL SHEETS
04	Ala	80	1.6/2.7	407 R1	643

REGISTERED ELECTRICAL ENGINEER 05/15/06 DATE
1-29-07
PLANS APPROVAL DATE

PB POWER, Inc.
A Parsons Brinckerhoff Company
303 Second St., Suite 700N
San Francisco, CA 94107-1317

The State of California or its officers or agents shall not be responsible for the accuracy or completeness of electronic copies of this plan sheet.

To get to the Caltrans web site, go to: http://www.dot.ca.gov

STATE OF CALIFORNIA - DEPARTMENT OF TRANSPORTATION
Caltrans

DESIGN OVERSIGHT: BEHZAD COLEMOHAMMADI
CALCULATED/DESIGNED BY: FK DATE 2/06 REVISED BY
CHECKED BY: AB 2/06 DATE REVISED

DATE PLOTTED => 1/14/2009
TIME PLOTTED => 4:17:24 PM
LAST REVISION 00-00-00

DGN FILE =>T:\13103\WS\pse\OTD-Contract 1\CCO\Electrical\CCO-80\Conduit rack & embedd struts\40120lua036r1.dgn

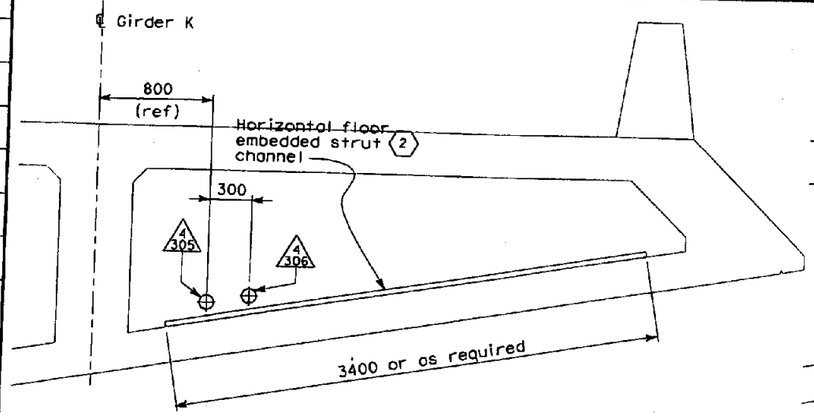

DETAIL 4A
DIAPHRAGMS BETWEEN PIER E17L AND E18L

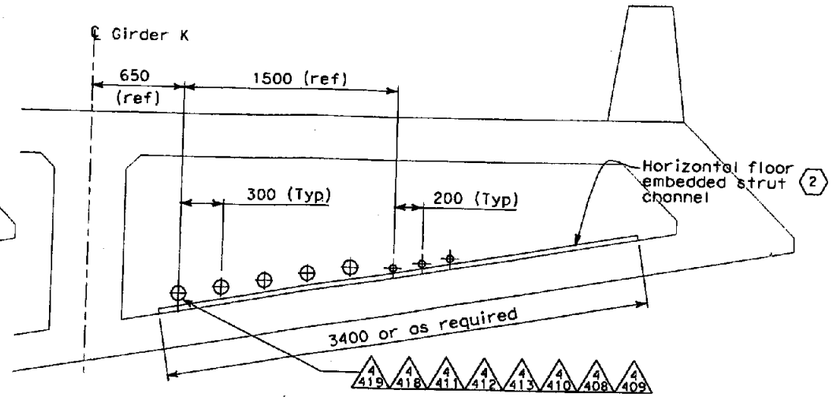

DETAIL 4D
BETWEEN HINGE FW AND PIER E20L

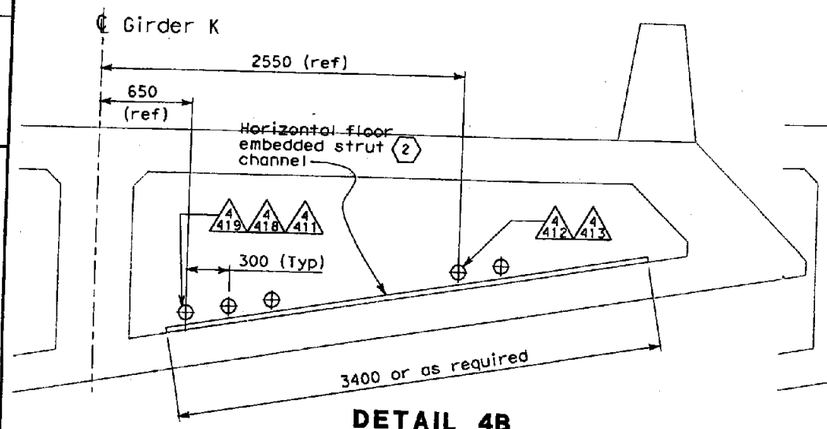

DETAIL 4B
DIAPHRAGMS BETWEEN PIER E18L AND E19L

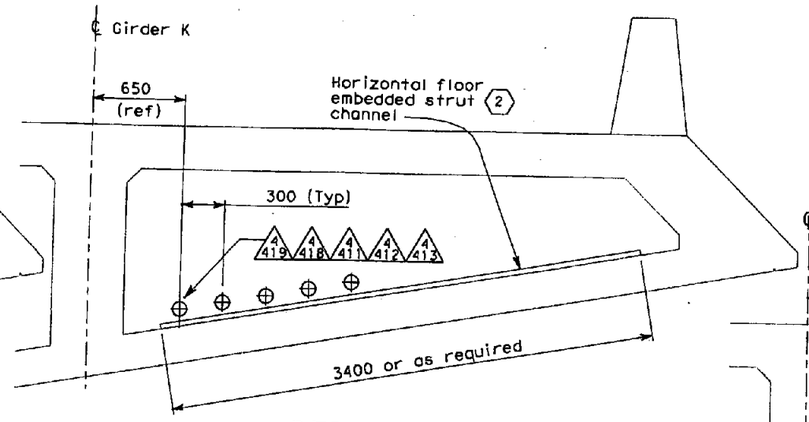

DETAIL 4E
BETWEEN PIER E20L AND PIER E21L

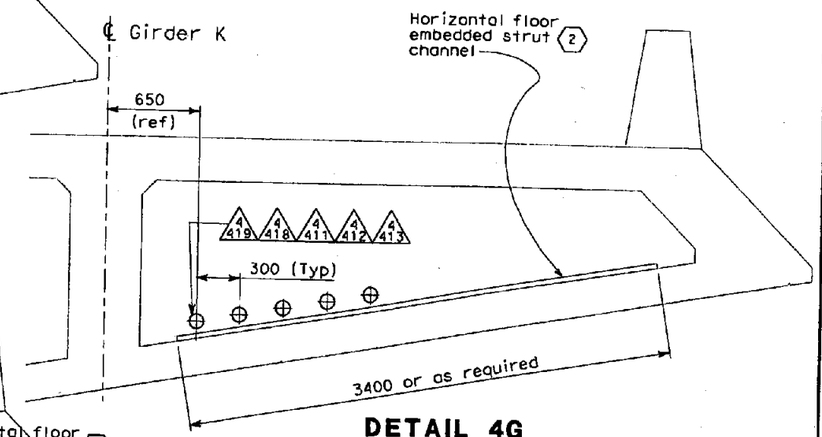

DETAIL 4G
DIAPHRAGMS EAST OF PIER E19L

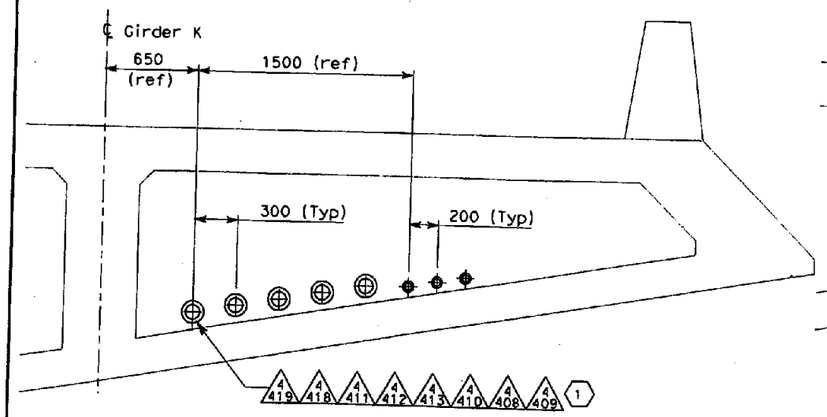

DETAIL 4C
WEST OF HINGE FW

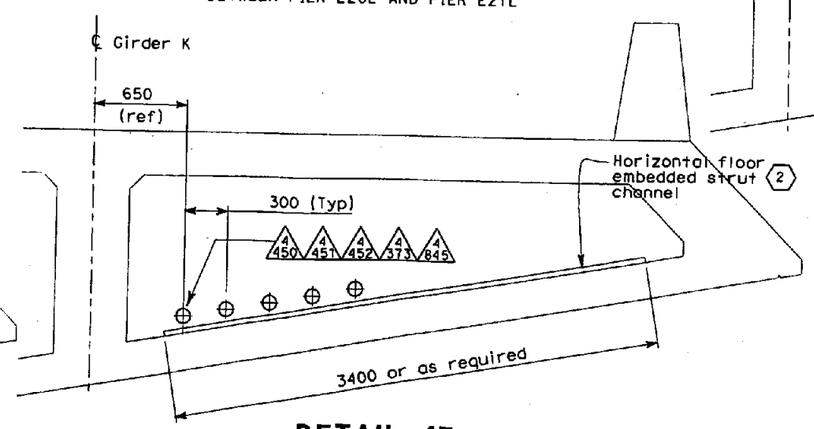

DETAIL 4F
BETWEEN PIER E21L AND PIER E22L

SHEET NOTES:

(1) Metallic pipe sleeves for conduits, for 103 mm RGS shall be 155 I.D. and 41 mm RGS shall be 78 I.D.

(2) For details, see Detail 9 sheet E-36.

MARK	DATE	DESCRIPTIONS	REV	CK	CCO
0	01/15/09	New drawing. Supercedes Detail 4 on sheet E-36.	EJL	FSW	78/80

REVISIONS

CONTRACT CHANGE ORDER NO. 80
SHEET 18 OF 23 — 04-012.014 1/22/09

DETAILS
ROADWAY AND GIRDER LEVEL WESTBOUND CONDUIT INSTALLATION AND SECTIONS
SCALE 1:20

E-36A

DIST	COUNTY	ROUTE	KILOMETER POST TOTAL PROJECT	SHEET No	TOTAL SHEETS
04	Ala	80	1.6/2.7	407A R0	643

REGISTERED ELECTRICAL ENGINEER — DATE 12/12/08

PLANS APPROVAL DATE

REGISTERED PROFESSIONAL ENGINEER — FADI WALIEDDINE No. 11465 Exp. 12/31/2009 ELECTRICAL — STATE OF CALIFORNIA

PB POWER, Inc.
A Parsons Brinckerhoff Company
303 Second St., Suite 700N
San Francisco, CA 94107-1317

The State of California or its officers or agents shall not be responsible for the accuracy or completeness of electronic copies of this plan sheet.

To get to the Caltrans web site, go to: http://www.dot.ca.gov

Caltrans Metric

STATE OF CALIFORNIA - DEPARTMENT OF TRANSPORTATION
Caltrans

DESIGN OVERSIGHT: BEHZAD GOLEMOHAMMADI

CALCULATED/DESIGNED BY: EJL — CHECKED BY: FSW

DATE REVISED: 12/08 — REVISED BY: 12/08

LAST REVISION 00-00-00 — DATE PLOTTED => 1/14/2009 — TIME PLOTTED => 12:07:17 PM

DGN FILE =>T:\13103\MS\pse\OTD-Contract 1\CCO\Electrical\CCO-80|Conduit rack & embedd struts\401201uo036Ar0.dgn

DIST	COUNTY	ROUTE	KILOMETER POST TOTAL PROJECT	SHEET No	TOTAL SHEETS
04	Ala	80	1.6/2.7	407B RO	643

REGISTERED ELECTRICAL ENGINEER 12/12/08 DATE

PLANS APPROVAL DATE

REGISTERED PROFESSIONAL ENGINEER FADI WALIEDDINE No. 11465 Exp. 12/31/2009 ELECTRICAL STATE OF CALIFORNIA

PB POWER, Inc.
A Parsons Brinckerhoff Company
303 Second St., Suite 700N
San Francisco, CA 94107-1317

The State of California or its officers or agents shall not be responsible for the accuracy or completeness of electronic copies of this plan sheet.

To get to the Caltrans web site, go to: http://www.dot.ca.gov

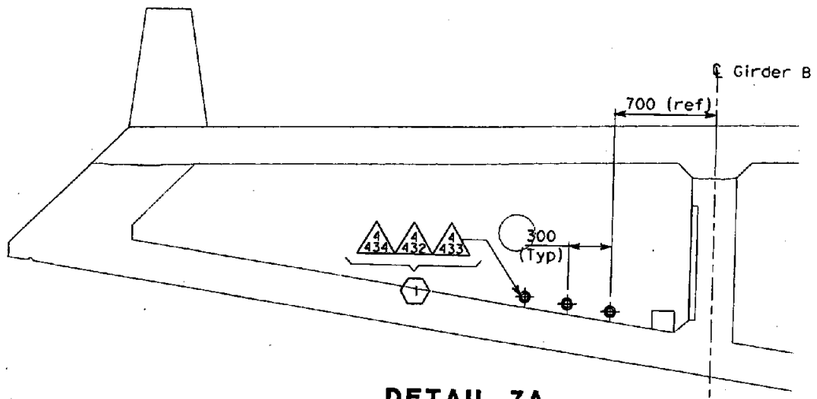

DETAIL 7A
WEST OF HINGE FW

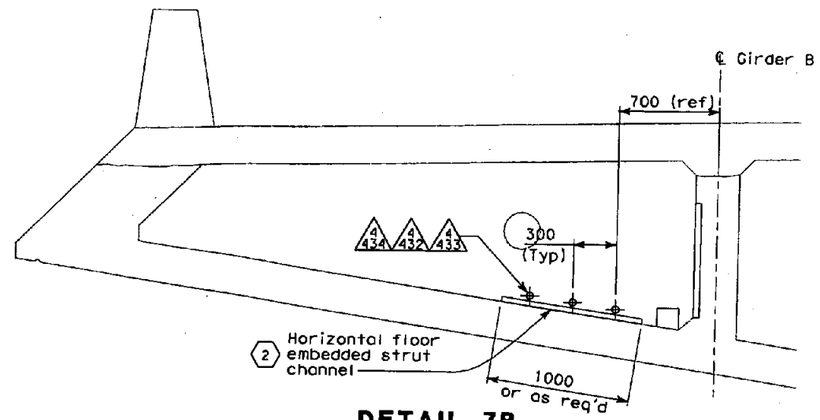

DETAIL 7B
BETWEEN HINGE FW AND PIER E20L

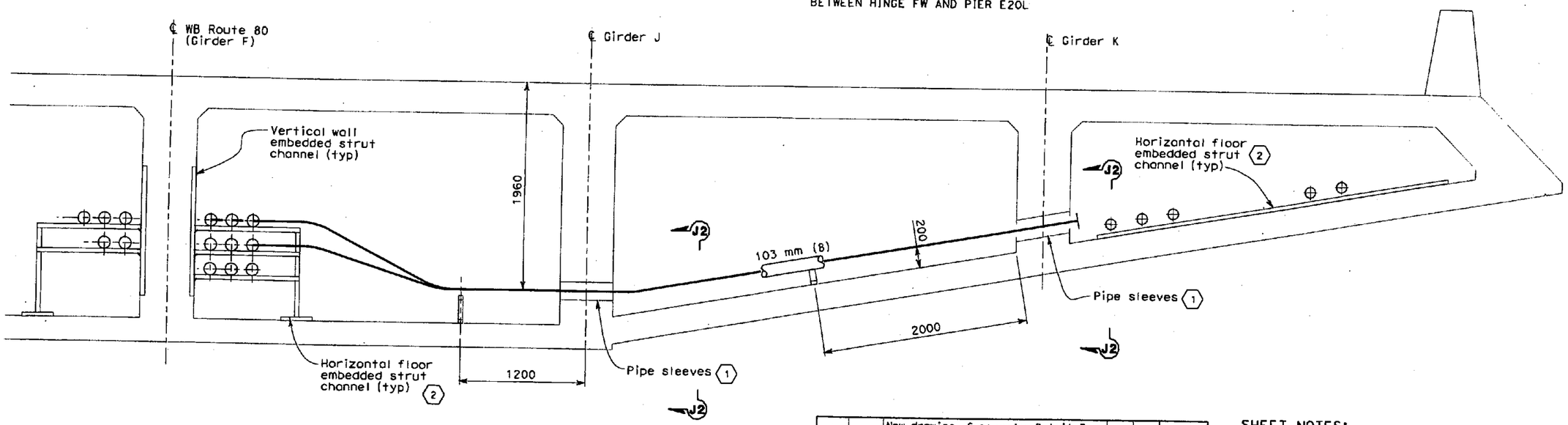

SECTION J1-J1
TRANSVERSE CONDUITS EAST OF PIER 18L

MARK	DATE	DESCRIPTIONS	REV	CK	CCO
0	01/15/09	New drawing. Supercedes Detail 7 on sheet E-36.	EJL	FSW	78/80

REVISIONS

CONTRACT CHANGE ORDER NO. 80
SHEET 19 OF 23 04-012004 1/22/09

SHEET NOTES:

1. Metallic pipe sleeves for conduits, for 103 mm RGS shall be 155 I.D. and 41 mm RGS shall be 103 I.D.
2. For details, see Detail 9 sheet E-36.

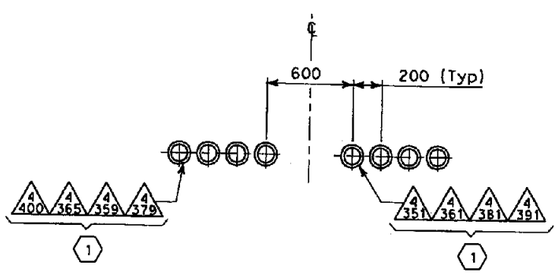

SECTION J2-J2

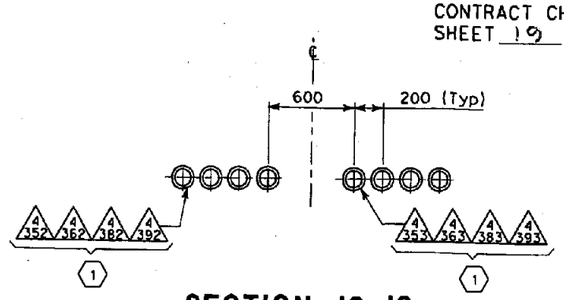

SECTION J3-J3
SEE SHEET E-27

DETAILS
ROADWAY AND GIRDER LEVEL WESTBOUND CONDUIT INSTALLATION AND SECTIONS
SCALE 1:20

STATE OF CALIFORNIA - DEPARTMENT OF TRANSPORTATION
Caltrans

DESIGN OVERSIGHT
BEHZAD GOLEMOHAMMADI

CALCULATED/DESIGNED BY EJL
CHECKED BY FSW

REVISED BY	DATE REVISED

DATE 12/08

LAST REVISION 00-00-00
DATE PLOTTED => 1/14/2009
TIME PLOTTED => 12:06:48 PM

0 20 40 60 80 DGN FILE =>T:\13103\MS\pse\OTD-Contract 1\CCO\Electrical\CCO-80 Conduit rack & embedd struts\40120Iua036BrD.dgn

DIST	COUNTY	ROUTE	KILOMETER POST TOTAL PROJECT	SHEET No	TOTAL SHEETS
04	Ala	80	1.6/2.7	407C R0	643

REGISTERED ELECTRICAL ENGINEER 12/12/08 DATE

PLANS APPROVAL DATE

REGISTERED PROFESSIONAL ENGINEER FADI WALIEDDINE No. 11485 Exp. 12/31/2009 ELECTRICAL STATE OF CALIFORNIA

PB POWER, Inc.
A Parsons Brinckerhoff Company
303 Second St., Suite 700N
San Francisco, CA 94107-1317

The State of California or its officers or agents shall not be responsible for the accuracy or completeness of electronic copies of this plan sheet.

To get to the Caltrans web site, go to: http://www.dot.ca.gov

Caltrans Metric

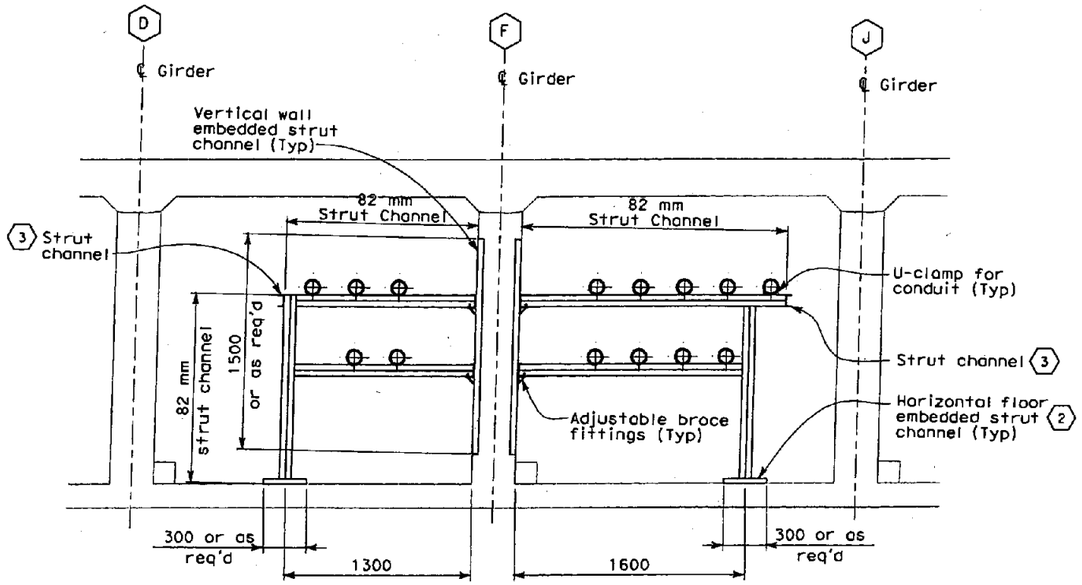

DETAIL 6A

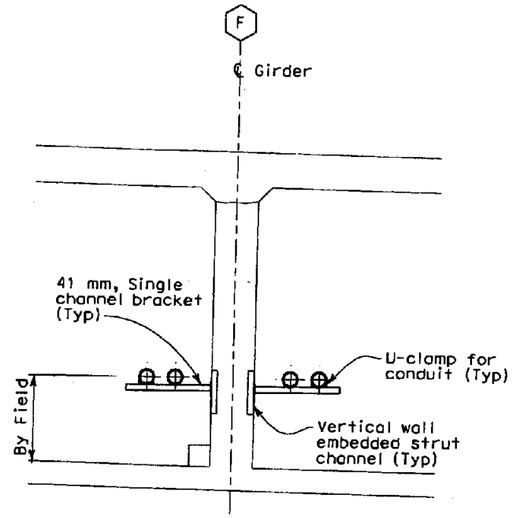

DETAIL 11

SHEET NOTES:

1. Install vertical embedded strut channel at utility vault girder wall (total 4). See sheet E-34.
2. Install horizontal embedded strut channel between intermediate diaphragms in girder floor.
3. Longitudinal channel support. For typical location see Detail 10, sheet E-36.

NOTES:

1. Contractor shall field adjust location of concrete inserts to avoid interference with bridge reinforcement, conflicts to structures access and openings
2. Strut channel location shall correspond to conduit plan as shown on sheets E-14 and E-15.

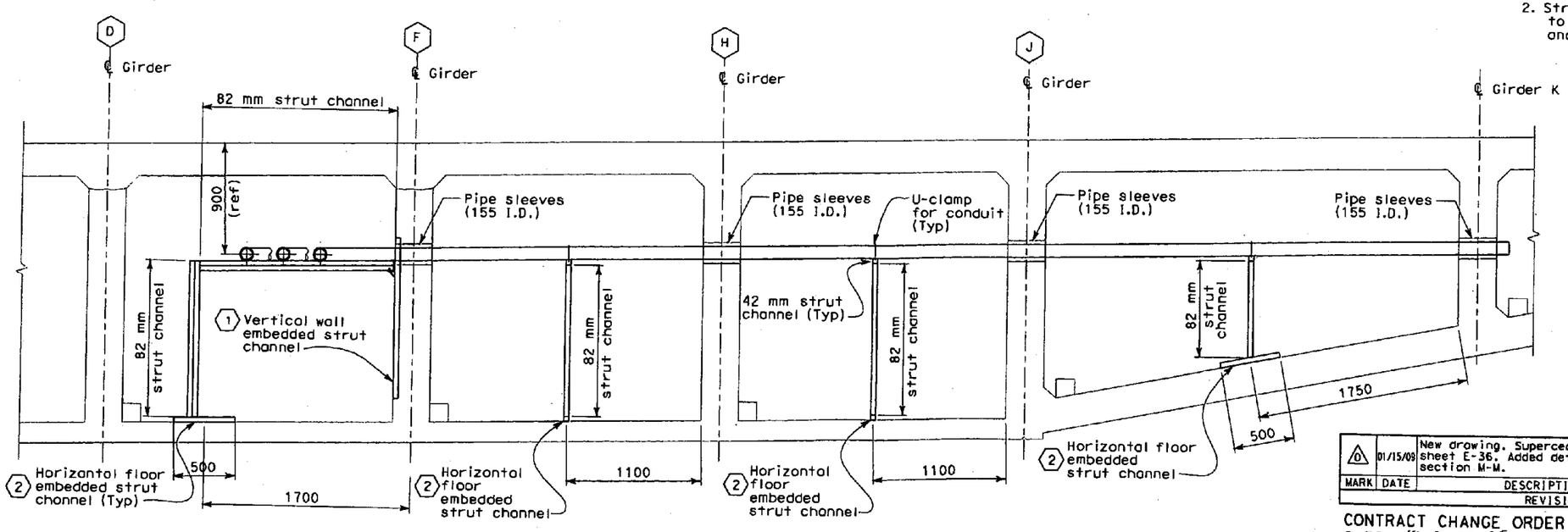

SECTION M-M

MARK	DATE	DESCRIPTIONS	REV	CK	CCO
0	01/15/09	New drawing. Supercedes detail 6 on sheet E-36. Added detail 11 and section M-M.	EJL	FSW	78/80

REVISIONS

CONTRACT CHANGE ORDER NO. 80
SHEET 20 OF 23 04-012014 1/22/09

DETAILS
ROADWAY AND GIRDER LEVEL WESTBOUND CONDUIT INSTALLATION AND SECTIONS

SCALE 1:20

E-36C

STATE OF CALIFORNIA - DEPARTMENT OF TRANSPORTATION
Caltrans

DESIGN OVERSIGHT: BEHZAD GOLEMOHAMMADI

CALCULATED/DESIGNED BY: EJL
CHECKED BY: FSW
DATE REVISED: 12/08
REVISED BY: 12/08

LAST REVISION 00-00-00
DATE PLOTTED => 1/14/2009
TIME PLOTTED => 12:06:12 PM

DGN FILE =>T:\13103\MS\pse\DTD-Contract 1\CCO\Electrical\CCO-80 Conduit rack & embedd struts\401201ua036CR0.dgn

DIST	COUNTY	ROUTE	KILOMETER POST TOTAL PROJECT	SHEET No	TOTAL SHEETS
04	Ala	80	1.6/2.7	411 R1	643

REGISTERED ELECTRICAL ENGINEER 05/15/06 DATE

1-29-07
PLANS APPROVAL DATE

REGISTERED PROFESSIONAL ENGINEER JENS ERLINGSSON No. 8249 Exp. 9/30/08 ELECTRICAL STATE OF CALIFORNIA

PB POWER, Inc.
A Parsons Brinckerhoff Company
303 Second St., Suite 700N
San Francisco, CA 94107-1317

The State of California or its officers or agents shall not be responsible for the accuracy or completeness of electronic copies of this plan sheet.

To get to the Caltrans web site, go to: http://www.dot.ca.gov

Caltrans Metric

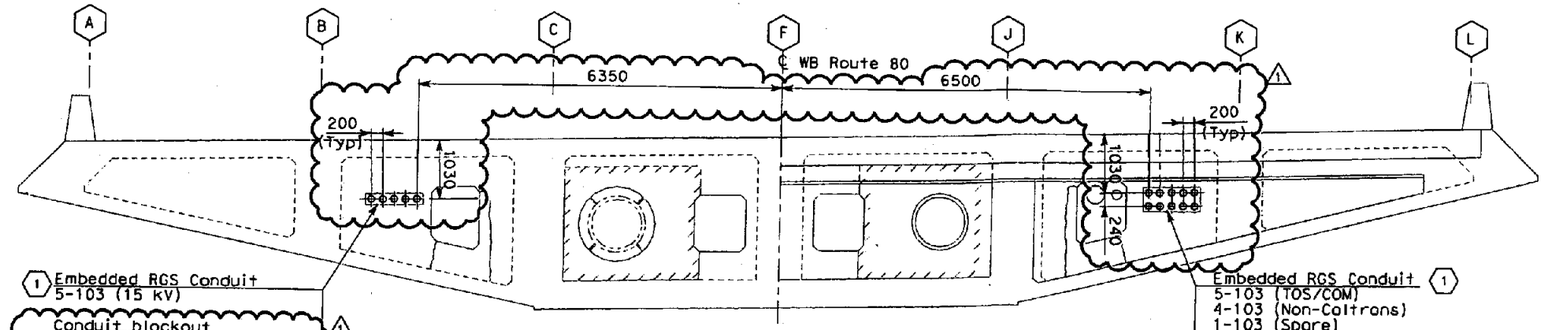

SECTION A-A - HINGE EW

SECTION VIEW AT DIAPHRAGM C
(SIMILAR AT PIER E17L)

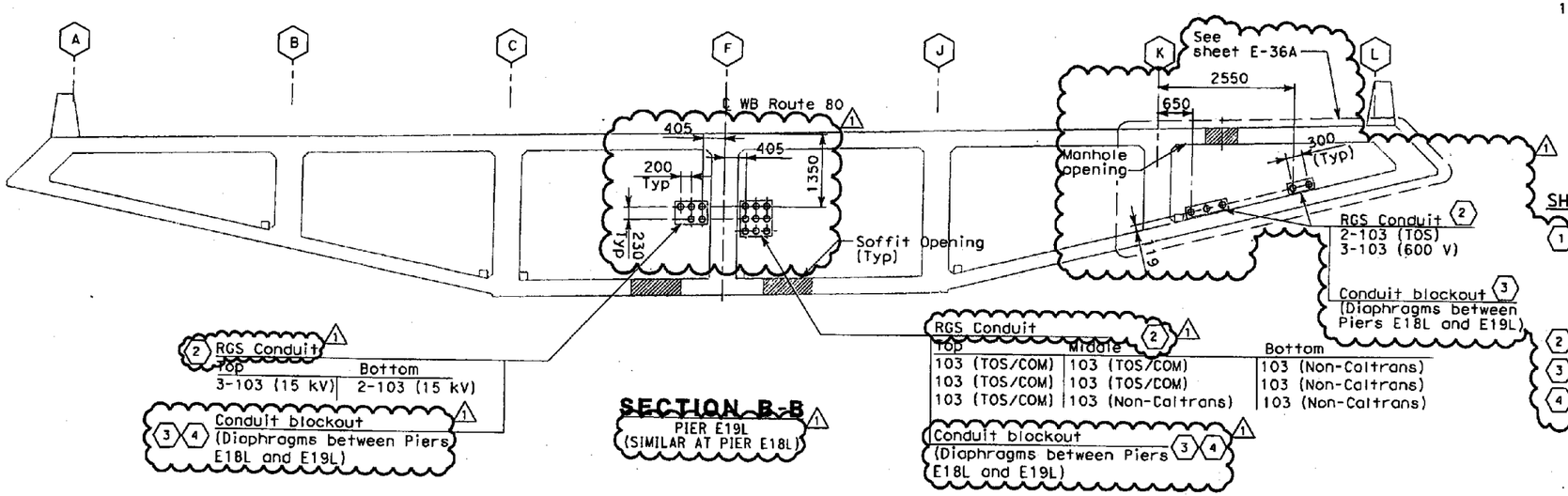

SECTION B-B

PIER E19L
(SIMILAR AT PIER E18L)

NOTES:

1. References:
   - For conduit layout plan, see sheets E-13 thru E-15.
   - For plan where section A-A is taken, refer to sheet E-13.
   - For plan where section B-B is taken, refer to sheet E-14.
   - For plan where section C-C is taken, refer to sheet E-14.

SHEET NOTES:

1. ~~All embedded conduits and IPS pipe sleeves arrangement and dimensions shall be provided by Structural Plans.~~ Conduits thru pier cap are provided with pipe sleeves. The contractor shall ensure the conduits are solidly secured at this location.
2. Provided with pipe sleeves for conduits.
3. See Structures Plan sheets.
4. Conduit blockout same as for diaphragms between Pier E19L and Hinge FW.

MARK	DATE	DESCRIPTIONS	REV	CK	CCO
1	01/15/09	Revised conduit locations, pipe sleeves size. Added sheet notes 1 thru 4.	EJL	FSW	78/80

REVISIONS

CONTRACT CHANGE ORDER NO. 80
SHEET 21 OF 23
04-0120U4 1/22/09

REGISTERED PROFESSIONAL ENGINEER FADI WALIEDDINE No. 11465 Exp. 12/31/2009 ELECTRICAL STATE OF CALIFORNIA

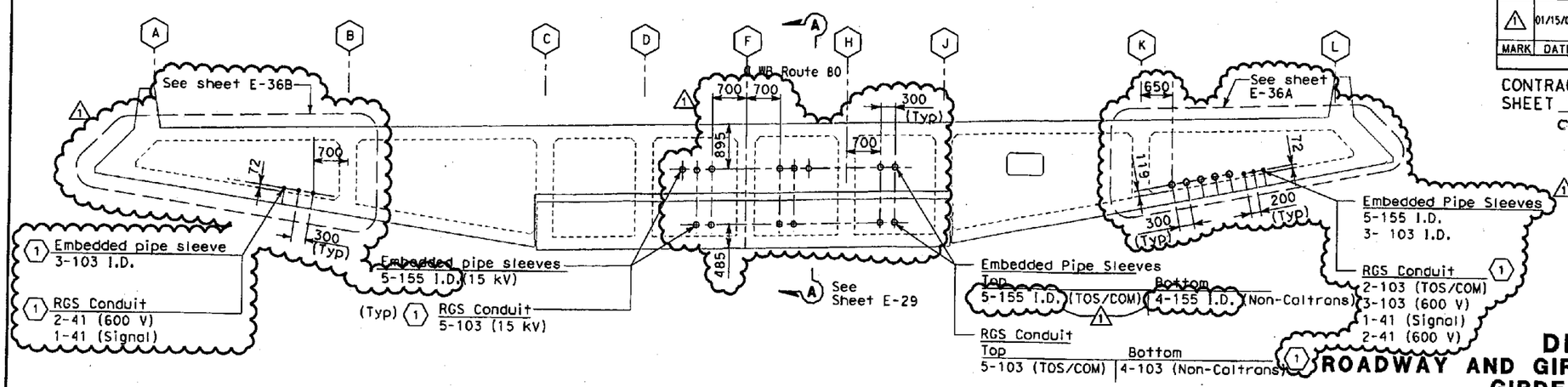

SECTION C-C - HINGE FW

DETAILS
ROADWAY AND GIRDER LEVEL WESTBOUND GIRDER SECTIONS

SCALE: 1:50

ALL DIMENSIONS ARE IN MILLIMETERS UNLESS OTHERWISE SHOWN

E-40

STATE OF CALIFORNIA - DEPARTMENT OF TRANSPORTATION
Caltrans

DESIGN OVERSIGHT: BEHZAD GOLEMOHAMMADI

CALCULATED/DESIGNED BY	FK	DATE 2/06	REVISED BY
CHECKED BY	AB	2/06	DATE REVISED

LAST REVISION 00-00-00 | DATE PLOTTED => 1/14/2009 | TIME PLOTTED => 12:05:37 PM

DGN FILE =>T:\13103\MS\pse\OTD-Contract 1\CCO\Electrical\CCO-80 | Conduit rack & embedd struts\401201u0040r1.dgn

DIST	COUNTY	ROUTE	KILOMETER POST TOTAL PROJECT	SHEET No	TOTAL SHEETS
04	Ala	80	1.6/2.7	412 R1	643

REGISTERED ELECTRICAL ENGINEER 05/15/06 DATE

1-29-07
PLANS APPROVAL DATE

REGISTERED PROFESSIONAL ENGINEER JENS ERLINGSSON No. 8249 Exp. 9/30/08 ELECTRICAL STATE OF CALIFORNIA

PB POWER, Inc.
A Parsons Brinckerhoff Company
303 Second St., Suite 700N
San Francisco, CA 94107-1317

The State of California or its officers or agents shall not be responsible for the accuracy or completeness of electronic copies of this plan sheet.

To get to the Caltrans web site, go to: http://www.dot.ca.gov

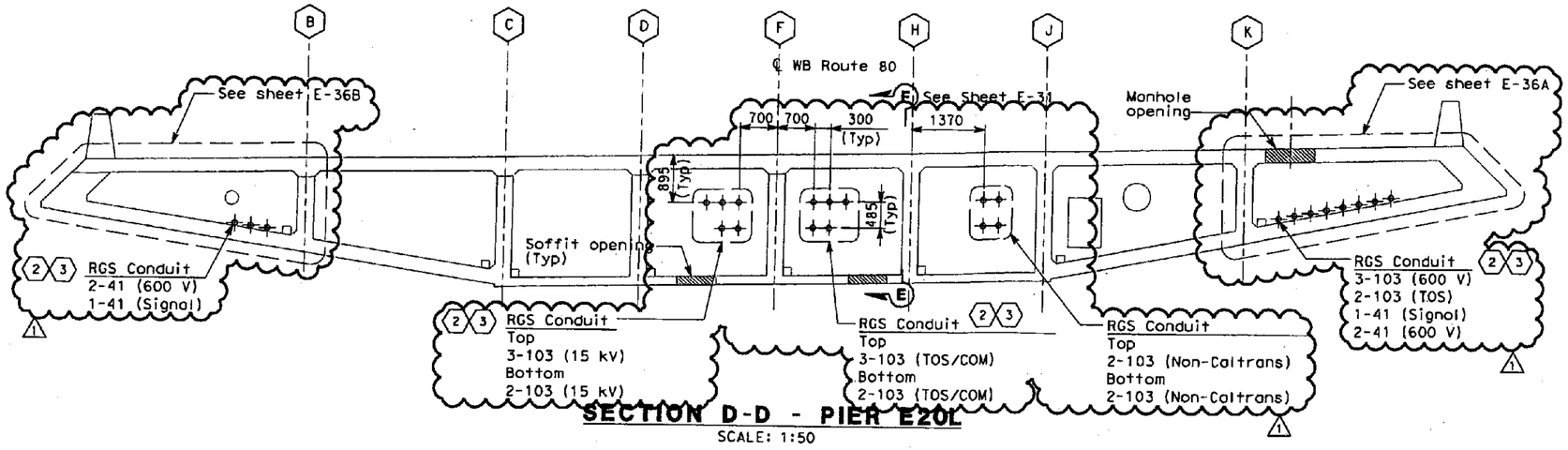

SECTION D-D - PIER E20L
SCALE: 1:50

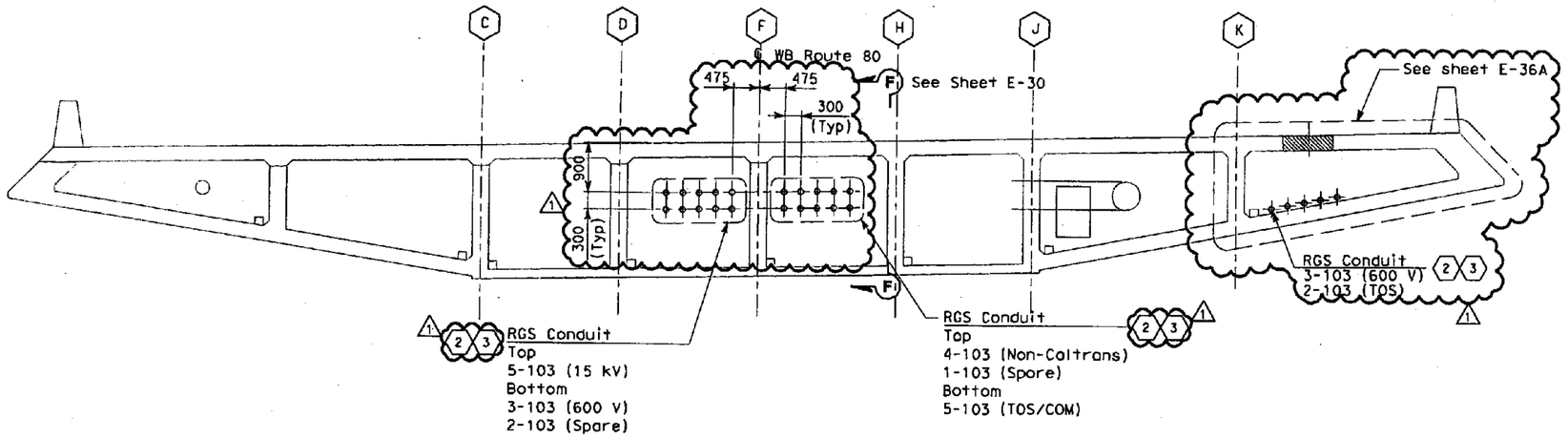

SECTION E-E - PIER E22L
SCALE: 1:50

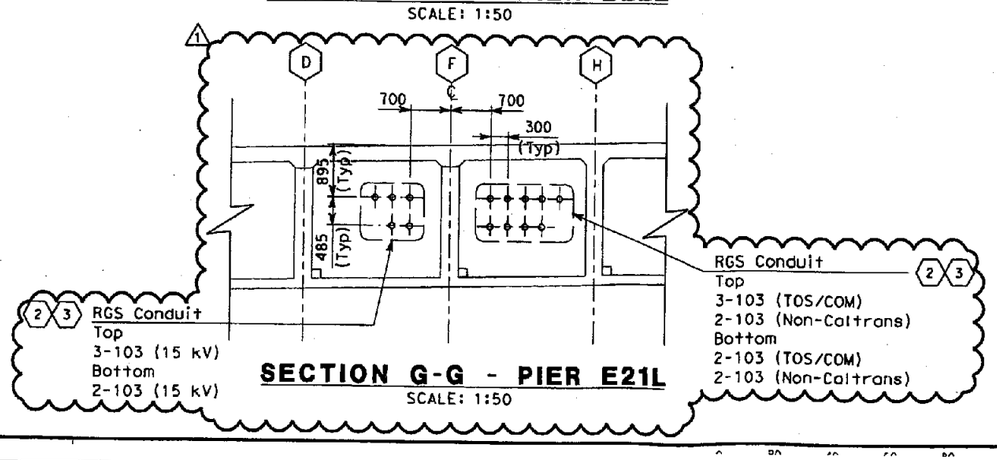

SECTION G-G - PIER E21L
SCALE: 1:50

NOTES:

1. References:
   - For conduit layout plan, see sheets E-13, thru E-15.
   - For plan where section D-D is taken, refer to sheet E-14.
   - For plan where sections E-E and F-F were taken, refer to sheet E-15.

SHEET NOTES:

1. ~~All embedded conduit arrangement and dimensions shall be provided on Structural Plans.~~ Deleted.
2. Provided with pipe sleeves for conduits.
3. For location of conduit diaphragm blockouts see structure plan sheets not shown.

REGISTERED PROFESSIONAL ENGINEER FADI WALIEDDINE No. 11465 Exp. 12/31/2009 ELECTRICAL STATE OF CALIFORNIA

MARK	DATE	DESCRIPTIONS	REV	CK	CCO
1	01/15/09	Revised conduit locations, sheet notes 1	EJL	FSW	78/80

REVISIONS

CONTRACT CHANGE ORDER NO. 80
SHEET 22 OF 23 04-0120L4 1/22/09

DETAILS
ROADWAY AND GIRDER LEVEL WESTBOUND GIRDER SECTIONS
SCALE AS NOTED

E-41

DATE	REVISED BY	DATE	REVISED
2/06	AB	2/06	

CALCULATED/DESIGNED BY FK
CHECKED BY

DESIGN OVERSIGHT
BEHZAD GOLEMOHAMMADI

STATE OF CALIFORNIA - DEPARTMENT OF TRANSPORTATION
Caltrans

LAST REVISION 00-00-00
DATE PLOTTED => 1/14/2009
TIME PLOTTED => 2:12:30 PM

DGN FILE =>T:\13103\MS\bse\010-Contract 1\CCO\Electrical\CCO-80\Conduit rack & embedd struts\401201ug041r1.dgn

DIST	COUNTY	ROUTE	KILOMETER POST TOTAL PROJECT	SHEET No	TOTAL SHEETS
04	Ala	80	1.6/2.7	581A R3	643

REGISTERED ELECTRICAL ENGINEER — DATE 4/30/08

PLANS APPROVAL DATE

REGISTERED PROFESSIONAL ENGINEER — FADI WALIEDDINE No. 11465 Exp. 12/31/2009 ELECTRICAL — STATE OF CALIFORNIA

PB POWER, Inc.
A Parsons Brinckerhoff Company
303 Second St., Suite 700N
San Francisco, CA 94107-1317

The State of California or its officers or agents shall not be responsible for the accuracy or completeness of electronic copies of this plan sheet.

To get to the Caltrans web site, go to http://www.dot.ca.gov

Caltrans Metric

CONDUIT DATA

ROADWAY AND GIRDER LEVEL WESTBOUND

Conduit No	Reference	Size	Type	Total Fill (mm²)	Allowable Fill (mm²)	Cable Area (mm²)	Included Cable No.	Conductor Type
4355A	E-20	103	RGS-PVC coated	0.00	3324.51	0.00	Pull Rope 1	Soft Fiber Polyester
4356A	E-20	103	RGS-PVC coated	0.00	3324.51	0.00	Pull Rope 1	Soft Fiber Polyester
4815	E-20	103	RGS-PVC coated	0.00	3324.51	0.00	Pull Rope 1	Soft Fiber Polyester
4820	E-20	78	RGS-PVC coated	990.41	1499.81	0.00	Pull Rope 1	Soft Fiber Polyester
						366.1	1626-1	1-3/C + gnd #4, 600 V, EPR insulation
						624.31	1626-2	1-4/C + gnd #2, 600 V, EPR insulation
4821	E-20	78	RGS-PVC coated	732.20	1499.81	0.00	Pull Rope 1	Soft Fiber Polyester
						366.1	1626	1-3/C + gnd #4, 600 V, EPR insulation
						366.1	1626-1	1-3/C + gnd #4, 600 V, EPR insulation
4826	E-21	78	RGS-PVC coated	990.41	1499.81	0.00	Pull Rope 1	Soft Fiber Polyester
						366.1	1627-1	1-3/C + gnd #4, 600 V, EPR insulation
						624.31	1627-2	1-4/C + gnd #2, 600 V, EPR insulation
4827	E-21	78	RGS-PVC coated	732.32	1499.81	0.00	Pull Rope 1	Soft Fiber Polyester
						366.1	1627	1-3/C + gnd #4, 600 V, EPR insulation
						366.1	1627-1	1-3/C + gnd #4, 600 V, EPR insulation
4846	E-20	103	RGS-PVC coated	0.00	3324.51	0.00	Pull Rope 1	Soft Fiber Polyester
Wireway 22W	E-20	203	203 mm x 203 mm wireway	1566.21	8258.05	366.10	1626	1-3/C + gnd #4, 600 V, EPR insulation
						366.10	1626-1	1-3/C + gnd #4, 600 V, EPR insulation
						624.31	1626-2	1-4/C + gnd #2, 600 V, EPR insulation
						62.07	1656-1	1-3/C #16, 600 V, EPR insulation
						49.21	UP171-10	3-1/C #12, 600 V, RHH/RHW insulation
						49.21	UP171-2A	2 + 1 gnd #12, #12, 600V, RHH/RHW insulation
						49.21	UP171-5	3-1/C #12, 600 V, RHH/RHW insulation
Wireway 23W	E-21	203	203 mm x 203 mm wireway	1566.21	8258.05	366.10	1627	1-3/C + gnd #4, 600 V, EPR insulation
						366.10	1627-1	1-3/C + gnd #4, 600 V, EPR insulation
						624.31	1627-2	1-4/C + gnd #2, 600 V, EPR insulation
						62.07	1656-2	1-3/C #16, 600 V, EPR insulation
						49.21	UP172-10	3 + 1 gnd #12, 600 V, RHH/RHW insulation
						49.21	UP172-2A	2 + 1 gnd #12, 600 V, RHH/RHW insulation
						49.21	UP172-5	3-1/C #12, 600 V, RHH/RHW insulation
1401A	E-10, E-11	41	RGS conduit	133.19	534.55	0.00	Pull Rope 1	Soft Fiber Polyester
						133.19	A-1006-1	3 + 1 gnd #8, #10, 600 V, RHH/RHW insulation
1401B	E-10, E-11	41	RGS conduit	133.19	534.55	0.00	Pull Rope 1	Soft Fiber Polyester
						133.19	A-1006-1	3 + 1 gnd #8, #10, 600 V, RHH/RHW insulation
1402A	E-11	41	RGS conduit	133.19	534.55	0.00	Pull Rope 1	Soft Fiber Polyester
						133.19	A-1007-1	3 + 1 gnd #8, #10, 600 V, RHH/RHW insulation
1411A	E-12	41	RGS conduit	212.85	534.55	0.00	Pull Rope 1	Soft Fiber Polyester
						212.85	A-1008-1	3 + 1 gnd #6, #8, 600 V, RHH/RHW insulation
1411B	E-12	41	RGS conduit	212.85	534.55	0.00	Pull Rope 1	Soft Fiber Polyester
						212.85	A-1008-1	3 + 1 gnd #6, #8, 600 V, RHH/RHW insulation
4403A	E-25	41	RGS conduit	0.00	534.55	0.00	Pull Rope 1	Soft Fiber Polyester
~~4404A~~	~~E-25~~	~~41~~	~~RGS conduit~~	~~0.00~~	~~534.55~~	~~0.00~~	~~Pull Rope 1~~	~~Soft Fiber Polyester~~
4450A	E-28, E-30	103	RGS conduit	772.72	3324.51	62.07	1656-1	1-3/C #16, 600 V, EPR insulation
						62.07	1656-2	1-3/C #16, 600 V, EPR insulation
						324.29	A-1007	1-3/C #16, 600 V, EPR insulation
						324.29	A-1006	1-3/C + gnd #6, 600 V, EPR insulation
						0.00	Pull Rope 1	Soft Fiber Polyester

CONDUIT DATA

ROADWAY AND GIRDER LEVEL WESTBOUND

Conduit No	Reference	Size	Type	Total Fill (mm²)	Allowable Fill (mm²)	Cable Area (mm²)	Included Cable No.	Conductor Type
4451A	E-28, E-30	103	RGS conduit	972.87	3324.51	0.00	Pull Rope 1	Soft Fiber Polyester
						324.29	S-1602	1-3/C #6, 600 V, EPR insulation
						324.29	S-1601	1-3/C #6, 600 V, EPR insulation
						324.29	A-1005	1-3/C #6, 600 V, EPR insulation
4452A	E-28, E-30	103	RGS conduit	732.20	2576.49	366.10	1626	1-3/C + gnd #4, 600 V, EPR insulation
						0.00	Pull Rope 1	Soft Fiber Polyester
						366.10	1627	1-3/C + gnd #4, 600 V, EPR insulation
4318	E-28, E-30	103	RGS conduit	0.00	3324.51	0.00	Pull Rope 1	Soft Fiber Polyester
4319	E-28, E-30	103	RGS conduit	0.00	3324.51	0.00	Pull Rope 1	Soft Fiber Polyester

MARK	DATE	DESCRIPTIONS	REV	CK	CCO NO.
		REVISIONS			
3	01/15/09	Added conduits 4450A, 4451A, 4452A 4318, 4319.	EJL	DO	80
2	08/29/08	Added conduits 4403A and 4404A	JH	EJL	Light Pole Base
1	08/29/08	Added conduits 1401A,1401B,1402A, 1411A, 1411B. Added cable/ckts. A-1006-1, A-1007-1, A-1008-1	JH	EJL	Light Pipe
0	04/30/08	New drawing. Added conduit nos. 4820, 4821, 4826, 4827, 4815, 4355A, 4846, 4356A. Added cables inside wireway 22W and 23W	ECR	EJL	65

CONTRACT CHANGE ORDER NO. 80
SHEET 23 OF 23 04-012014 1/22/09

DETAILS
CONDUIT AND TRAY SCHEDULE

E-228A

STATE OF CALIFORNIA - DEPARTMENT OF TRANSPORTATION — Caltrans

DESIGN OVERSIGHT: BEHZAD GOLEMOHAMMADI

CALCULATED/DESIGNED BY — ECR — DATE 4/08 — REVISED BY
CHECKED BY — EJL — 5/08 — DATE REVISED

LAST REVISION 00-00-00 — DATE PLOTTED => 1/14/2009 — TIME PLOTTED => 12:04:22 PM

STATE OF CALIFORNIA - DEPARTMENT OF TRANSPORTATION

CONTRACT CHANGE ORDER MEMORANDUM

DATE: 1/12/2009 Page 1 of 1

TO: AMER BATA / BEN GHAFGHAZI	FILE: E.A. 04 - 0120L4
FROM: BEN GHAFGHAZI	CO-RTE-PM ALA-80-1.6/2.7
	FED. NO. NO FED AID
CCO#: 80 SUPPLEMENT#: 0 Category Code: CBPC	CONTINGENCY BALANCE (incl. this change) $9,683,775.20
COST: $250,000.00 INCREASE ☑ DECREASE ☐	HEADQUARTERS APPROVAL REQUIRED? ☑ YES ☐ NO
SUPPLEMENTAL FUNDS PROVIDED: $0.00	IS THIS REQUEST IN ACCORDANCE WITH ENVIRONMENTAL DOCUMENTS? ☑ YES ☐ NO
CCO DESCRIPTION: Revise conduit details in bridge.	**PROJECT DESCRIPTION:** Construct bridge, roadway, building and electrical system.

Original Contract Time:	Time Adj. This Change:	Previously Approved CCO Time Adjustments:	Percentage Time Adjusted: (including this change)	Total # of Unreconciled Deferred Time CCO(s): (including this change)
810 Day(s)	0 Day(s)	178 Day(s)	22 %	5

THIS CHANGE ORDER PROVIDES FOR:

Modifying conduit routing, racking, and grounding details for Bridge No. 34-0006L per sheets 2 of 23 through 23 of 23 of this CCO to accommodate installation of electrical conduits. All work shall be in accordance with Section 10-3, "Signals, Lighting and Electrical Systems," of the Special Provisions and Section 86, "Signals, Lighting and Electrical Systems," of the Standard Specification.

This change is necessary to correct various issues related to electrical conduits in the bridge. The conduit routing is being changed because of conflicts with rebar at pier caps, hinges, and other congested locations as determined from Integrated Shop Drawings (ISDs). The routing changes also require modifications to the conduit racking layout. These changes are being added under CCO as required by Section 5-1.15, "Integrated Shop Drawings," of the Special Provisions. Various other details for conduit racking installation were omitted from the contract plans and are being added on this CCO. The plans also did not include any grounding details. Grounding is required by National Electric Code and, therefore, is being added on this CCO.

This work will be paid as Extra Work at Force Account for $250,000.00, which can be financed from the contingency fund.

This change has been discussed and concurred with Jaime Gutierrez of Project Development, Parviz Boozarpour of Electrical Design, Rene Fortaleza of Electrical Maintenance, Ellery Lucas of Parsons Brinkerhoff, Patrick Treacy of Headquarters Construction and Ken Terspra, Project Manager. An Issue and Approve was granted by Headquarters on February 13, 2009.

No adjustment of contract time is warranted since this change does not affect the controlling operation.

CONCURRED BY:			
Construction Engineer:	for Ben Ghafghazi	Date	02/24/09
Bridge Engineer:		Date	02/24/09
Project Engineer:	Jaime Gutierrez	Date	10/17/08
Project Manager:	Ken Terprstra	Date	2/20/09
FHWA Rep.:		Date	
Environmental:		Date	
Other (specify):	Parviz Boozarpour, Elec. Design	Date	1/5/09
Other (specify):	Rene Fortaleza, Elec. Maintenance	Date	1/5/09
District Prior Approval By:		Date	
HQ (Issue Approve) By:	Larry Salhaney	Date	2/13/09
Resident Engineer's Signature:		Date	

ESTIMATE OF COST

	THIS REQUEST	TOTAL TO DATE
ITEMS	$0.00	$0.00
FORCE ACCOUNT	$250,000.00	$250,000.00
AGREED PRICE	$0.00	$0.00
ADJUSTMENT	$0.00	$0.00
TOTAL	$250,000.00	$250,000.00

FEDERAL PARTICIPATION

☐ PARTICIPATING ☐ PARTICIPATING IN PART ☑ NONE
☐ NON-PARTICIPATING (MAINTENANCE) ☐ NON-PARTICIPATING

FEDERAL SEGREGATION (if more than one Funding Source or P.I.P. type)
☑ CCO FUNDED PER CONTRACT ☐ CCO FUNDED AS FOLLOWS

FEDERAL FUNDING SOURCE	PERCENT

ADA Notice: For individuals with sensory disabilities, this document is available in alternate formats. For information call: (916) 654-6410 or TDD (916) 654-3880 or write Records and Forms Management, 1120 N Street, MS-89, Sacramento, CA 95814.

CONTRACT CHANGE ORDER

Change Requested by: Engineer

CCO 81	Suppl. No. 0	Contract No. 04 - 0120L4	Road ALA-80-1.6/2.7	FED. AID LOC.: NO FED AID

To: **M C M CONSTRUCTION INC**

You are directed to make the following changes from the plans and specifications or do the following described work not included in the plans and specifications for this contract. ***NOTE: This change order is not effective until approved by the Engineer.***

Description of work to be done, estimate of quantities and prices to be paid. (Segregate between additional work at contract price, agreed price and force account.) Unless otherwise stated, rates for rental of equipment cover only such time as equipment is actually used and no allowance will be made for idle time. This last percentage shown is the net accumulated increase or decrease from the original quantity in the Engineer's Estimate.

Adjustment of Compensation at Lump Sum:

At Abutment E23L modify water and reclaimed water line piping, add a closure concrete panel to utility vaults, and revise utility vault hatch configurations as shown on sheets 2 of 5 through 5 of 5 of this CCO. All work shall be in accordance with Sections 10-1.47, "Utility Lines," and 10-1.52, "Utility Vault," of the Special Provisions. For this work the contractor will be paid the sum of $7,442.00. This sum constitutes full compensation, including markups, for this change.

Adjustment of Compensation at Agreed Lump Sum $7,442.00

Estimated Cost: Increase ☑ **Decrease** ☐ **$7,442.00**

By reason of this order the time of completion will be adjusted as follows: 0 days

Signature	**Resident Engineer** BEN GHAFGHAZI	**Date** 7/22/09
Signature	**Construction Engineer** Ben Ghafghazi	**Date** 7/22/09
Signature	**Construction Engineer** Ben Ghafghazi	**Date** 8/24/09

We the undersigned contractor, have given careful consideration to the change proposed and agree, if this proposal is approved, that we will provide all equipment, furnish the materials, except as may otherwise be noted above, and perform all services necessary for the work above specified, and will accept as full payment therefor the prices shown above.

NOTE: If you, the contractor, do not sign acceptance of this order, your attention is directed to the requirements of the specifications as to proceeding with the ordered work and filing a written protest within the time therein specified.

Signature	**(Print name and title)** Edmundo A. Pucci - Treasurer Contract Coordinator	**Date** 08-18-09

DIST	COUNTY	ROUTE	KILOMETER POST TOTAL PROJECT	SHEET No	TOTAL SHEETS
04	Ala	80		354R2	643

REGISTERED MECHANICAL ENGINEER — DATE 8/30/06

PLANS APPROVAL DATE

REGISTERED PROFESSIONAL ENGINEER — Jack Wheeler No. 21648 Exp. 6-30-07 MECH — STATE OF CALIFORNIA

The State of California or its officers or agents shall not be responsible for the accuracy or completeness of electronic copies of this plan sheet.

To get to the Caltrans web site, go to: http://www.dot.ca.gov

REGISTERED MECHANICAL ENGINEER — DATE 1/26/09

REGISTERED PROFESSIONAL ENGINEER — Jack Wheeler No. 21648 Exp. 6-30-09 MECH — STATE OF CALIFORNIA

CONTRACT CHANGE ORDER NO 81

SHEET 2 OF 5 4/16/09

MARK	DATE	DESCRIPTIONS	BY	CH'D
4	1-26-09	Changed Pipe Location	JRS	JW
3	10-01-06	Removed Cover Plate Reference	JRS	JW
2	10-01-06	Clarified Dimension	JRS	JW
1	10-01-06	Changed location of expansion joint	JRS	JW

REVISIONS

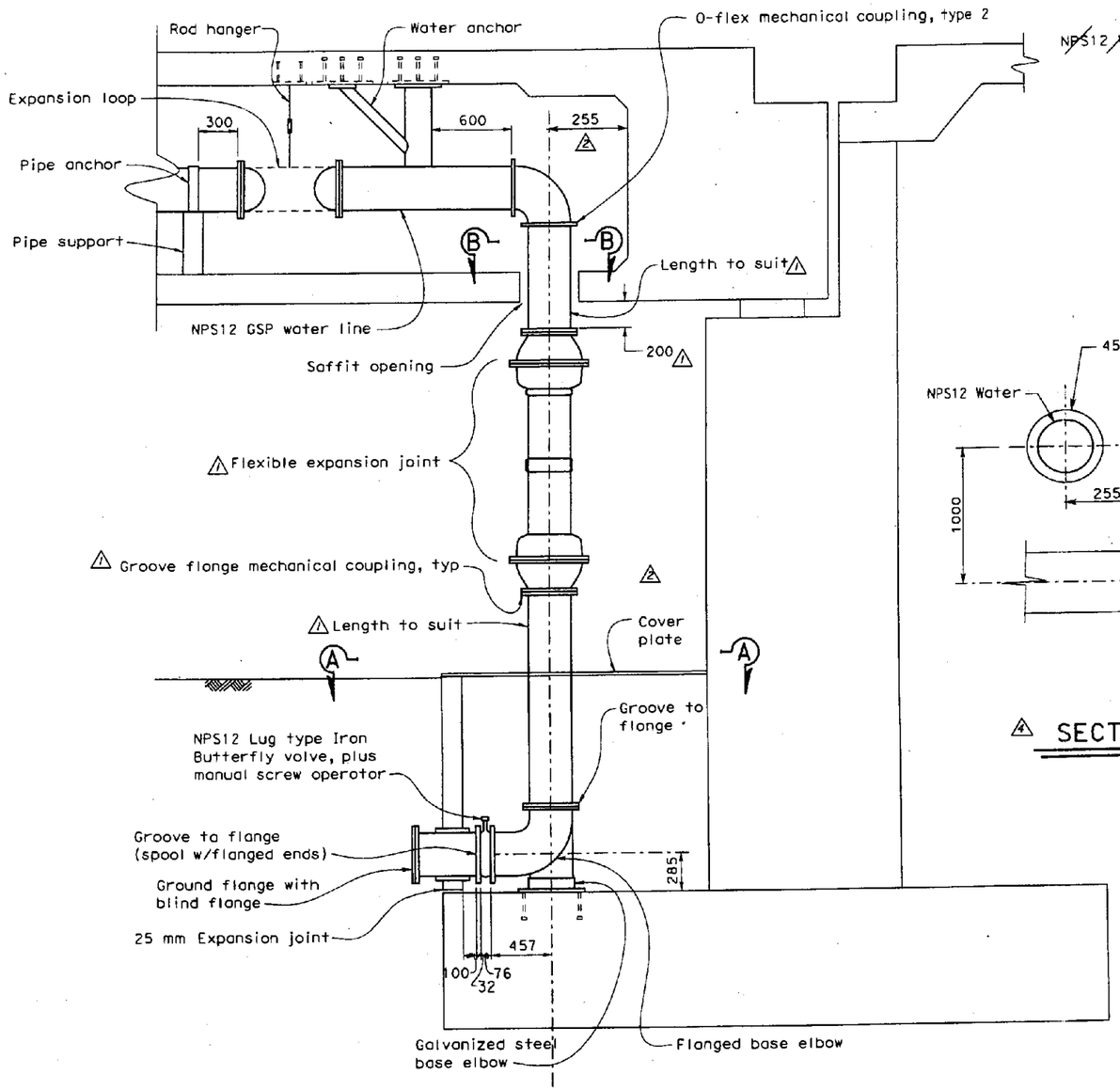

WATER LINE AT ABUTMENT

~~1:20~~ N.T.S

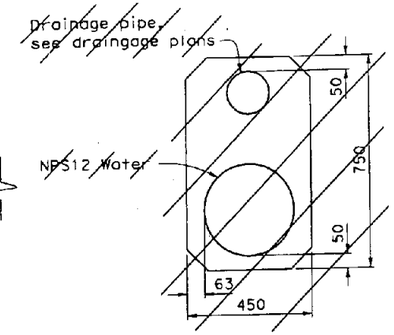

4 SECTION B-B

1:10

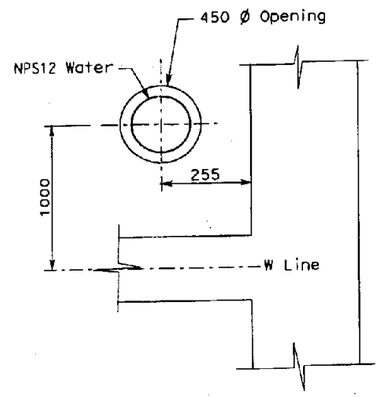

4 SECTION B-B

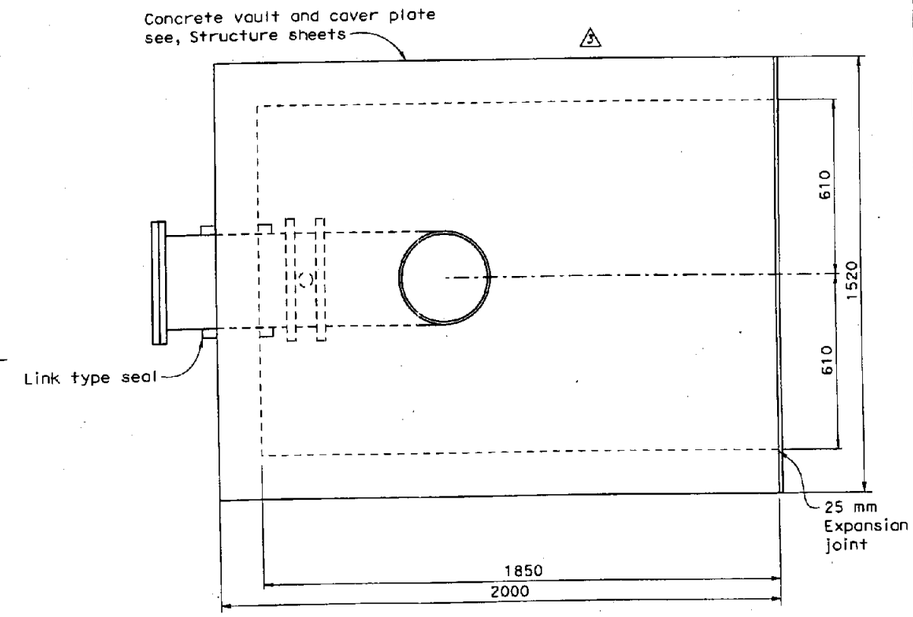

VIEW A-A

1:10

Notes:

1. Attach base elbow to footing with 4 x 19 mm stainless steel concrete expansion anchor bolts.
2. Flexible expansion joint to provide 304 mm movement. Neutral setting to provide for +228 mm, -76 mm movement
3. Concrete vault to be isolated from abutment.

Caltrans Metric

	BY	CHECKED
DESIGN	Jack Wheeler	Mike White
DETAILS	Sandra McNealy	Jack Wheeler
QUANTITIES	Jack Wheeler	Mike White

STATE OF CALIFORNIA DEPARTMENT OF TRANSPORTATION

DIVISION OF ENGINEERING SERVICES STRUCTURE DESIGN

BRIDGE NO. 34-0006L/R

KILOMETER POST 1.6

OAKLAND TOUCHDOWN PHASE 1

WATER LINE AT ABUTMENT E23L

SHEET M-4 R2

ALL DIMENSIONS ARE IN METERS UNLESS OTHERWISE SHOWN

ORIGINAL SCALE IN MILLIMETERS FOR REDUCED PLANS 0 10 20 30 40 50 60 70 80 90 100

CU 04251
EA 0120L1

FILE => ~5228179.dgn

DISREGARD PRINTS BEARING EARLIER REVISION DATES

REVISION DATES: 5-5-06 5-8-06 5-30-06 10-01-06 1-26-09

STRUCTURES DESIGN GENERAL PLAN SHEET (METRIC) (REV.03-17-04)

USERNAME => mmossoin DATE PLOTTED => 26-JAN-2009 TIME PLOTTED => 10:59

DIST	COUNTY	ROUTE	KILOMETER POST TOTAL PROJECT	SHEET NO	TOTAL SHEETS
04	Ala	80	1.6/2.7	347R	643

REGISTERED CIVIL ENGINEER 11-20-08 DATE

PLANS APPROVAL DATE

Sanad Hamoud No. 51986 Exp. 09-30-10 CIVIL STATE OF CALIFORNIA REGISTERED PROFESSIONAL ENGINEER

The State of California or its officers or agents shall not be responsible for the accuracy or completeness of electronic copies of this plan sheet.

Caltrans now has a web site! To get to the web site, go to: http://www.dot.ca.gov

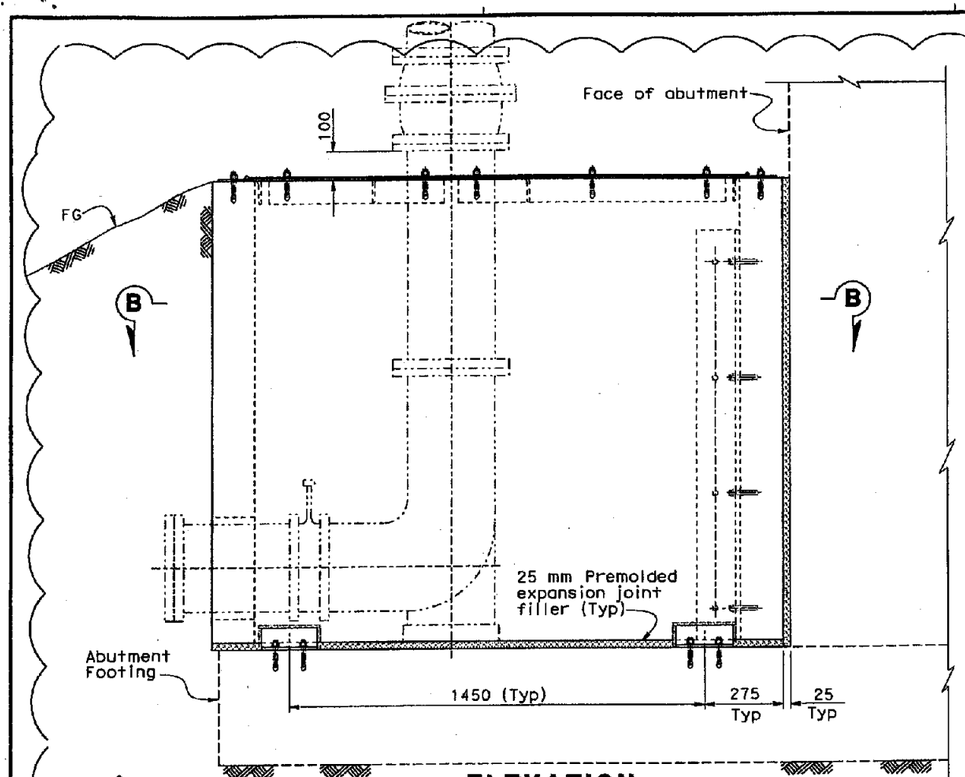

ELEVATION
1:10

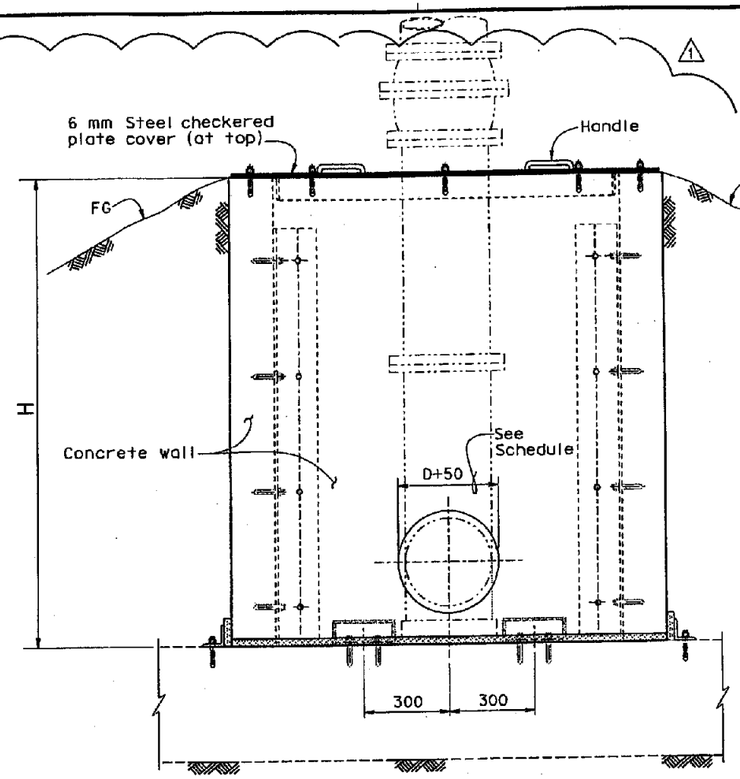

FRONT - VIEW
1:10

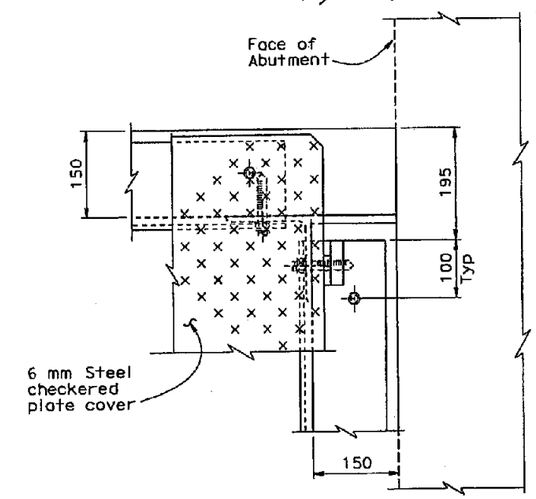

WALL and ANGLE at Abut Corner DETAIL
1:5

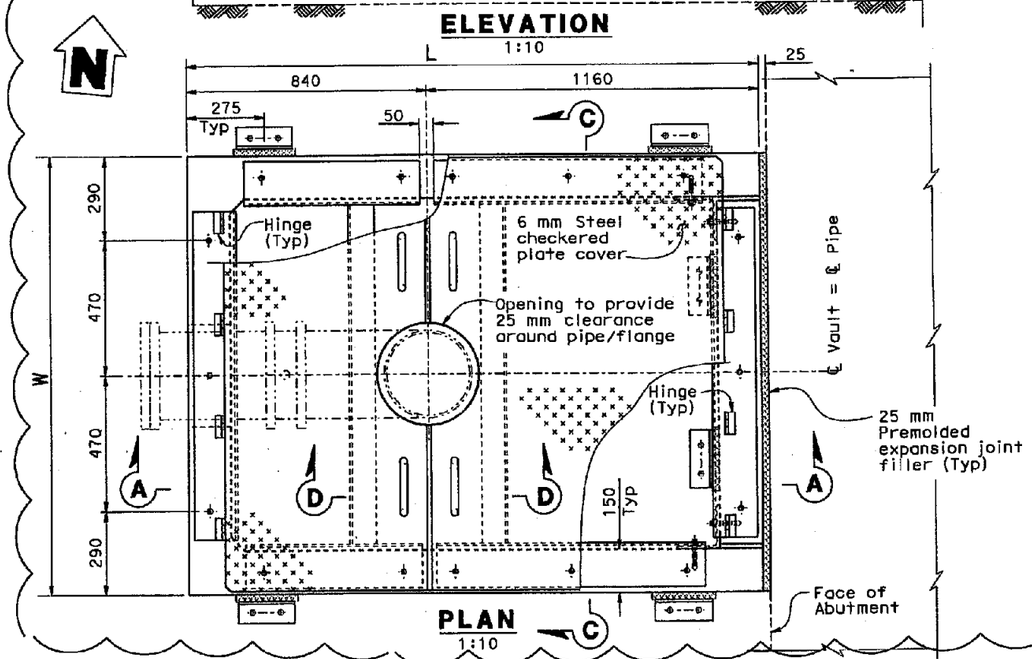

PLAN
1:10

SCHEDULE

NPS Line	Concrete Vault			Opening "D+50" (mm)
	L	W	H	
Water	2000	1520	1625	355
Reclaimed water	2000	1520	1625	202

The Contractor shall verify all controlling field dimensions before ordering or fabricating any material.

MARK	DATE		DES	CHK
1	11/20/08	Whole sheet is Revised For Vault Configuration	AY	SH

CONTRACT CHANGE ORDER NO. 81
SHEET 4 OF 5 4/15/09

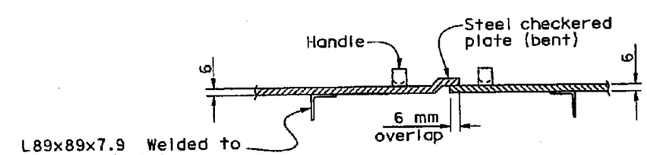

SECTION D-D
NO SCALE

GENERAL NOTES:

1. Min. concrete reinforcement clearance is 50 mm.
2. Concrete strength shall be 25 MPa at 28 days.
3. For piping locations, see Mechanical plans.

NOTES:

For sections A-A, B-B and C-C see "UTILITY VAULTS DETAIL 2" sheet.

ALL DIMENSIONS ARE IN MILLIMETERS UNLESS OTHERWISE SHOWN

	BY	CHECKED
DESIGN	A. Jenabzadeh/Yazdani	S. Hamoud
DETAILS	M. Yu	S. Hamoud
QUANTITIES	B. Nau	A. Jenabzadeh

ORIGINAL SCALE IN MILLIMETERS FOR REDUCED PLANS 0 10 20 30 40 50 60 70 80 90 100

STATE OF CALIFORNIA DEPARTMENT OF TRANSPORTATION

DIVISION OF ENGINEERING SERVICES STRUCTURE DESIGN DESIGN BRANCH 16

CU 04
EA 0120L1

FILE => 34-0006-u-miscdt01.dgn

BRIDGE NO. 34-0006L/R
KILOMETER POST 1.6

OAKLAND APPROACH STRUCTURES
UTILITY VAULTS DETAIL 1

DISREGARD PRINTS BEARING EARLIER REVISION DATES

REVISION DATES 6-13-05 1-3-06 1-31-06 4-28-06 5-31-06 6-29-06 7-27-06 11-20-08

SHEET 10R OF 13

STRUCTURES DESIGN DETAIL SHEET (METRIC) (REV.03-17-04)

USERNAME => myu DATE PLOTTED => 21-NOV-2008 TIME PLOTTED => 09:19

DIST	COUNTY	ROUTE	KILOMETER POST TOTAL PROJECT	SHEET No	TOTAL SHEETS
04	Ala	80	1.6/2.7	347S	643

REGISTERED CIVIL ENGINEER 11-20-08 DATE

PLANS APPROVAL DATE

Samad Hamoud No. 51986 Exp. 09-30-10 CIVIL STATE OF CALIFORNIA REGISTERED PROFESSIONAL ENGINEER

The State of California or its officers or agents shall not be responsible for the accuracy or completeness of electronic copies of this plan sheet.

Caltrans now has a web site! To get to the web site, go to: http://www.dot.ca.gov

Caltrans Metric

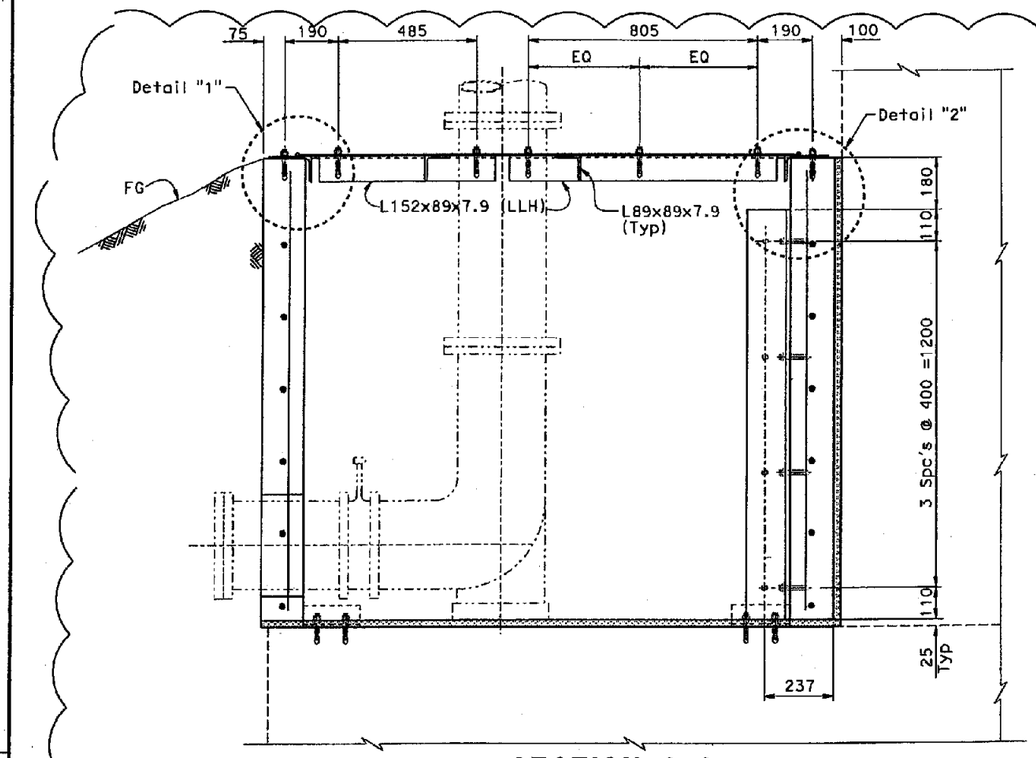

SECTION A-A
1:10

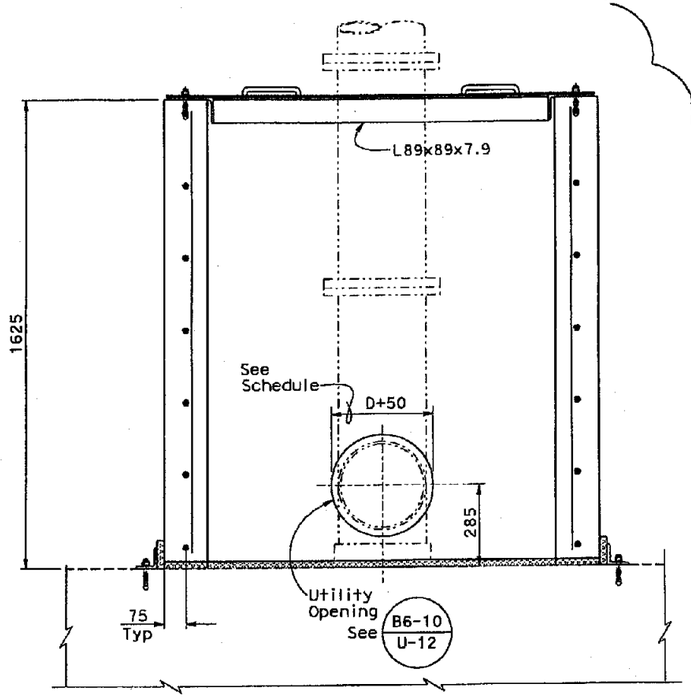

SECTION C-C
1:10

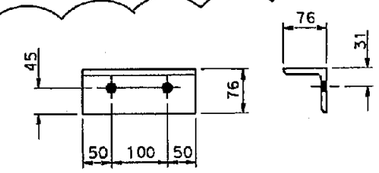

"L" Angle shaped
DETAIL - "3"
1:5

SUPPLEMENTAL SHEET
CONTRACT CHANGE ORDER NO. 81
SHEET 5 OF 5 4/15/09

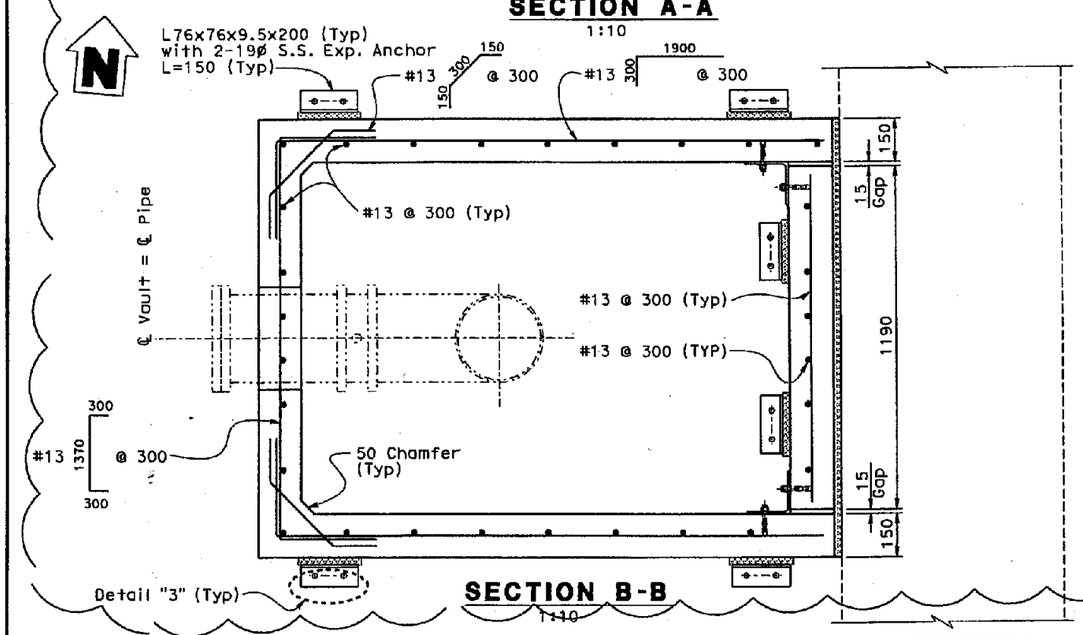

SECTION B-B
1:10

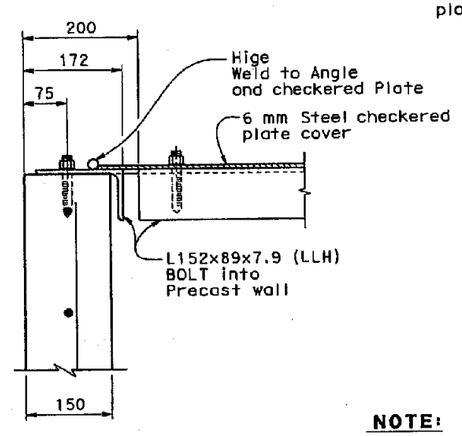

DETAIL - "1"
1:5

NOTE:
S. S. Denotes Stainless Steel

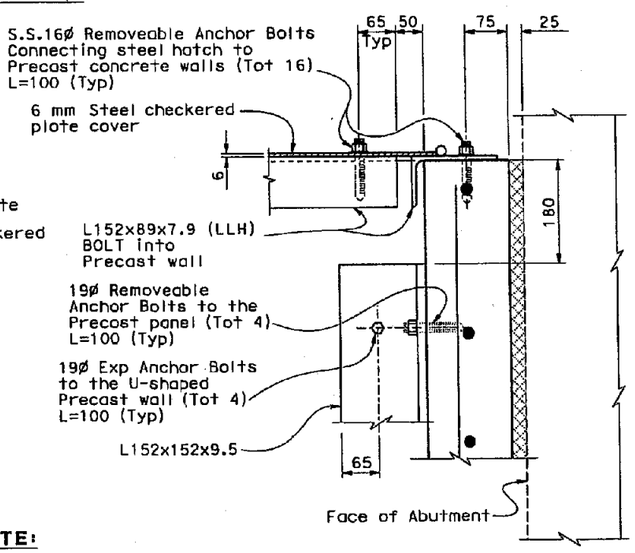

DETAIL - "2"
1:5

ALL DIMENSIONS ARE IN MILLIMETERS UNLESS OTHERWISE SHOWN

	BY	CHECKED
DESIGN	A. Jenabzadeh/Yazdani	S. Hamoud
DETAILS	M. Yu	S. Hamoud
QUANTITIES	B. Nou	A. Jenabzadeh

STATE OF CALIFORNIA
DEPARTMENT OF TRANSPORTATION

DIVISION OF ENGINEERING SERVICES
STRUCTURE DESIGN
DESIGN BRANCH 16

CU 04
EA 0120L1

BRIDGE NO. 34-0006L/R
KILOMETER POST 1.6

OAKLAND APPROACH STRUCTURES
UTILITY VAULTS DETAIL 2

ORIGINAL SCALE IN MILLIMETERS FOR REDUCED PLANS 0 10 20 30 40 50 60 70 80 90 100

DISREGARD PRINTS BEARING EARLIER REVISION DATES

REVISION DATES 11-20-08

SHEET 10S OF 13

FILE => 34-0006-u-miscdt02.dgn

STRUCTURES DESIGN DETAIL SHEET (METRIC) (REV.03-17-04)

USERNAME => myu DATE PLOTTED => 21-NOV-2008 TIME PLOTTED => 09:21

STATE OF CALIFORNIA - DEPARTMENT OF TRANSPORTATION

CONTRACT CHANGE ORDER MEMORANDUM

TO: AMER BATA / BEN GHAFGHAZI	FILE: E.A. 04 - 0120L4
	CO-RTE-PM ALA-80-1.6/2.7
FROM: BEN GHAFGHAZI	FED. NO. NO FED AID
CCO#: 81 SUPPLEMENT#: 0 Category Code: CLPX	CONTINGENCY BALANCE (incl. this change) $5,931,256.20
COST: $7,442.00 INCREASE ☑ DECREASE ☐	HEADQUARTERS APPROVAL REQUIRED? ☐ YES ☑ NO
SUPPLEMENTAL FUNDS PROVIDED: $0.00	IS THIS REQUEST IN ACCORDANCE WITH ENVIRONMENTAL DOCUMENTS? ☑ YES ☐ NO
CCO DESCRIPTION: Utility Vault at Abutment #23.	**PROJECT DESCRIPTION:** Construct bridge, roadway, building and electrical system.

Original Contract Time:	Time Adj. This Change:	Previously Approved CCO Time Adjustments:	Percentage Time Adjusted: (including this change)	Total # of Unreconciled Deferred Time CCO(s): (including this change)
810 Day(s)	0 Day(s)	184 Day(s)	23 %	12

THIS CHANGE ORDER PROVIDES FOR:

Modifying water and reclaimed water line piping, and revising utility vaults by adding a closure concrete panel at Abutment E23L and modifying hatch configuration as shown on sheets 2 of 5 through 5 of 5 of the CCO.

This change is necessary because the actual original ground elevation at Abutment E23L is approximately 600 mm higher than shown on the plans. This difference in elevation requires an increase in the height of the vaults which necessitates moving the waterline expansion joints upward to clear the vault. A wall is also being added to the utility vaults along the face of the abutment in lieu of using the abutment face as a wall of the vault. This is required to allow the vaults to move independently of the abutment. The vault modifications also require changes to the hatches.

This work will be paid as an Adjustment of Compensation at Agreed Lump Sum of $7,442.00, which can be financed from the contingency fund.

These changes have been requested by Jack Wheeler of Mechanical Branch and Samad Hamoud of Structures Design (memos attached). These changes have been discussed and concurred by John Babcock of Headquarters Office of Structures Construction and Lina Ellis of Structures Maintenance.

No adjustment of contract time is warranted since this change does not affect the controlling operation.

CONCURRED BY:		
Construction Engineer:	Ben Ghafghazi	Date 7/22/09
Bridge Engineer:	Mehran Ardakanian	Date 7/22/09
Project Engineer:	Samad Hamoud, Str. Design	Date 11/19/08
Project Manager:		Date
FHWA Rep.:		Date
Environmental:	Lina Ellis, Structures Maint.	Date 4/14/09
Other (specify):	Jack Wheeler, Mechanical Branch	Date 11/4/08
Other (specify):	John Babcock, Headquarters OSC	Date 10/21/08
District Prior Approval By:		Date
HQ (Issue Approve) By:		Date
Resident Engineer's Signature:		Date 7/22/09

ESTIMATE OF COST

	THIS REQUEST	TOTAL TO DATE
ITEMS	$0.00	$0.00
FORCE ACCOUNT	$0.00	$0.00
AGREED PRICE	$0.00	$0.00
ADJUSTMENT	$7,442.00	$7,442.00
TOTAL	$7,442.00	$7,442.00

FEDERAL PARTICIPATION

☐ PARTICIPATING ☐ PARTICIPATING IN PART ☑ NONE
☐ NON-PARTICIPATING (MAINTENANCE) ☐ NON-PARTICIPATING

FEDERAL SEGREGATION (if more than one Funding Source or P.I.P. type)
☑ CCO FUNDED PER CONTRACT ☐ CCO FUNDED AS FOLLOWS

FEDERAL FUNDING SOURCE	PERCENT

ADA Notice: For individuals with sensory disabilities, this document is available in alternate formats. For information call: (916) 654-6410 or TDD (916) 654-3880 or write Records and Forms Management, 1120 N Street, MS-89, Sacramento, CA 95814.

STATE OF CALIFORNIA - DEPARTMENT OF TRANSPORTATION

CONTRACT CHANGE ORDER

Change Requested by: Engineer

CCO: 82	Suppl. No. 0	Contract No. 04 - 0120L4	Road ALA-80-1.6/2.7	FED. AID LOC.: NO FED AID

To: **M C M CONSTRUCTION INC**

You are directed to make the following changes from the plans and specifications or do the following described work not included in the plans and specifications for this contract. ***NOTE: This change order is not effective until approved by the Engineer.***

Description of work to be done, estimate of quantities and prices to be paid. (Segregate between additional work at contract price, agreed price and force account.) Unless otherwise stated, rates for rental of equipment cover only such time as equipment is actually used and no allowance will be made for idle time. This last percentage shown is the net accumulated increase or decrease from the original quantity in the Engineer's Estimate.

Extra Work at Force Account:

As determined by the Engineer, provide professional design services to produce integrated shop drawings for Bridge No. 34-0006L and Bridge No. 34-0006R beyond that required by Section 5-1.15, "Integrated Shop Drawings," of the Special Provisions. All work shall be in accordance with Section 5-1.15, "Integrated Shop Drawings," of the Special Provisions.

Estimated cost of Extra Work at Force Account $50,000.00

Consideration of a time adjustment will be deferred until completion of the work specified herein. Determination of a commensurate time extension will be made in accordance with Section 10-1.14, "Progress Schedule (Critical Path Method)," of the Special Provisions and Section 8-1.07, "Liquidated Damages," of the Standard Specifications.

Estimated Cost: **Increase** ☑ **Decrease** ☐ **$50,000.00**

By reason of this order the time of completion will be adjusted as follows: Deferred

Submitted by

Signature	Resident Engineer BEN GHAFGHAZI	Date 12/19/08

Approval Recommended by

Signature	Construction Engineer Ben Ghafghazi	Date 12/19/08

Engineer Approval by

Signature	Construction Manager Amer Bata	Date 1/12/09

We the undersigned contractor, have given careful consideration to the change proposed and agree, if this proposal is approved, that we will provide all equipn furnish the materials, except as may otherwise be noted above, and perform all services necessary for the work above specified, and will accept as full paymer therefor the prices shown above.

NOTE: If you, the contractor, do not sign acceptance of this order, your attention is directed to the requirements of the specifications as to proceeding with the ordered work and filing a written protest within the time therein specified.

Contractor Acceptance by

Signature	(Print name and title) EDMUNDO A. PUCHI, TREASURER	Date 1/5/09

STATE OF CALIFORNIA - DEPARTMENT OF TRANSPORTATION

CONTRACT CHANGE ORDER MEMORANDUM

TO: AMER BATA / BEN GHAFGHAZI	FILE: E.A. 04 - 0120L4
FROM: BEN GHAFGHAZI	CO-RTE-PM ALA-80-1.6/2.7
	FED. NO. NO FED AID
CCO#: 82 SUPPLEMENT#: 0 Category Code: CHSA	CONTINGENCY BALANCE (incl. this change) $10,153,766.20
COST: $50,000.00 INCREASE ☑ DECREASE ☐	HEADQUARTERS APPROVAL REQUIRED? ☐ YES ☑ NO
SUPPLEMENTAL FUNDS PROVIDED: $0.00	IS THIS REQUEST IN ACCORDANCE WITH ENVIRONMENTAL DOCUMENTS? ☑ YES ☐ NO
CCO DESCRIPTION: Additional ISD work.	**PROJECT DESCRIPTION:** Construct bridge, roadway, building and electrical system.

Original Contract Time:	Time Adj. This Change:	Previously Approved CCO Time Adjustments:	Percentage Time Adjusted: (including this change)	Total # of Unreconciled Deferred Time CCO(s): (including this change)
810 Day(s)	DEF Day(s)	9 Day(s)	1 %	7

THIS CHANGE ORDER PROVIDES FOR:

Professional design services to produce integrated shop drawings (ISD'S) for Bridge No. 34-0006L and Bridge No. 34-0006R beyond that required by Section 5-1.15, "Integrated Shop Drawings," of the Special Provisions.

This work is necessary to produce new drawings due to various changes that were made as a result of CCO's to correct plan errors. ISD's are required to resolve conflicts between planned positions of embedded items, reinforcing, and concrete cover. This CCO will cover costs for additional ISD's required as a result of changing the locations of or adding embedded items. The Contractor is still responsible for resolving conflicts for planned embeds per Section 5-1.15 of the Special Provisions.

This work will be paid as Extra Work at Force Account for $50,000.00, which can be financed from the contingency fund.

Design and Maintenance concurrence is not necessary since this change is for administrative purposes only.

Adjustment of contract time is deferred pending completion of the work specified in this change as it may affect the controlling operation.

CONCURRED BY:		
Construction Engineer:	Ben Ghafghazi	Date 12/19/08
Bridge Engineer:	Mehran Ardakanian	Date 01/14/09
Project Engineer:		Date
Project Manager:		Date
FHWA Rep.:		Date
Environmental:		Date
Other (specify):		Date
Other (specify):		Date
District Prior Approval By:		Date
HQ (Issue Approve) By:		Date
Resident Engineer's Signature:		Date 12/19/08

ESTIMATE OF COST

	THIS REQUEST	TOTAL TO DATE
ITEMS	$0.00	$0.00
FORCE ACCOUNT	$50,000.00	$50,000.00
AGREED PRICE	$0.00	$0.00
ADJUSTMENT	$0.00	$0.00
TOTAL	$50,000.00	$50,000.00

FEDERAL PARTICIPATION

☐ PARTICIPATING ☐ PARTICIPATING IN PART ☑ NONE
☐ NON-PARTICIPATING (MAINTENANCE) ☐ NON-PARTICIPATING

FEDERAL SEGREGATION (if more than one Funding Source or P.I.P. type)
☑ CCO FUNDED PER CONTRACT ☐ CCO FUNDED AS FOLLOWS

FEDERAL FUNDING SOURCE	PERCENT

ADA Notice: For individuals with sensory disabilities, this document is available in alternate formats. For information call: (916) 654-6410 or TDD (916) 654-3880 or write Records and Forms Management, 1120 N Street, MS-89, Sacramento, CA 95814.

STATE OF CALIFORNIA - DEPARTMENT OF TRANSPORTATION

CONTRACT CHANGE ORDER MEMORANDUM

DATE: 4/6/2010

TO: AMER BATA / BEN GHAFGHAZI

FROM: BEN GHAFGHAZI

FILE: **E.A.** 04 - 0120L4
CO-RTE-PM ALA-80-1.6/2.7
FED. NO. NO FED AID

CCO#: **82**	SUPPLEMENT#: **1**	Category Code: **AFZZ**	CONTINGENCY BALANCE (incl. this change) **$2,146,116.40**
COST: **$0.00**	INCREASE ☐	DECREASE ☐	HEADQUARTERS APPROVAL REQUIRED? ☐ YES ☑ NO
SUPPLEMENTAL FUNDS PROVIDED:	**$0.00**		IS THIS REQUEST IN ACCORDANCE WITH ENVIRONMENTAL DOCUMENTS? ☑ YES ☐ NO

CCO DESCRIPTION:
Time Adjustment of 0 Days.

PROJECT DESCRIPTION:
Construct bridge, roadway, building and electrical system.

Original Contract Time:	Time Adj. This Change:	Previously Approved CCO Time Adjustments:	Percentage Time Adjusted: (including this change)	Total # of Unreconciled Deferred Time CCO(s): (including this change)
810 Day(s)	**0** Day(s)	**184** Day(s)	**23** %	**12**

THIS CHANGE ORDER PROVIDES FOR:

A time adjustment of 0 (zero) working days, in accordance with Section 8-1.07, "Liquidated Damages", of the Standard Specifications.

It has been determined that the work of Contract Change Order No. 82 has had no impact on the contractor's controlling operation. Therefore, a time extension of 0 days is recommended.

Total Time Adjustment = 0 Days

CONCURRED BY:

Construction Engineer:	Ben Ghafghazi	Date 4/7/2010
Bridge Engineer:		Date
Project Engineer:		Date
Project Manager:		Date
FHWA Rep.:		Date
Environmental:		Date
Other (specify):		Date
Other (specify):		Date
District Prior Approval By:		Date
HQ (Issue Approve) By:		Date
Resident Engineer's Signature:		Date 4/7/2010

ESTIMATE OF COST

	THIS REQUEST	TOTAL TO DATE
ITEMS	$0.00	$0.00
FORCE ACCOUNT	$0.00	$50,000.00
AGREED PRICE	$0.00	$0.00
ADJUSTMENT	$0.00	$0.00
TOTAL	$0.00	$50,000.00

FEDERAL PARTICIPATION

☐ PARTICIPATING ☐ PARTICIPATING IN PART ☑ NONE
☐ NON-PARTICIPATING (MAINTENANCE) ☐ NON-PARTICIPATING

FEDERAL SEGREGATION (if more than one Funding Source or P.I.P. type)
☑ CCO FUNDED PER CONTRACT ☐ CCO FUNDED AS FOLLOWS

FEDERAL FUNDING SOURCE	PERCENT

ADA Notice: For individuals with sensory disabilities, this document is available in alternate formats. For information call: (916) 654-6410 or TDD (916) 654-3880 or write Records and Forms Management, 1120 N Street, MS-89, Sacramento, CA 95814.

STATE OF CALIFORNIA - DEPARTMENT OF TRANSPORTATION

CONTRACT CHANGE ORDER

Change Requested by: Engineer

CCO: 82	Suppl. No. 1	Contract No. 04 - 0120L4	Road ALA-80-1.6/2.7	FED. AID LOC.: NO FED AID

To: **M C M CONSTRUCTION INC**

You are directed to make the following changes from the plans and specifications or do the following described work not included in the plans and specifications for this contract. ***NOTE: This change order is not effective until approved by the Engineer.***

Description of work to be done, estimate of quantities and prices to be paid. (Segregate between additional work at contract price, agreed price and force account.) Unless otherwise stated, rates for rental of equipment cover only such time as equipment is actually used and no allowance will be made for idle time. This last percentage shown is the net accumulated increase or decrease from the original quantity in the Engineer's Estimate.

TIME ADJUSTMENT:

A determination of the delay in completion of the contract due to the work specified by Contract Change Order No. 82 has been made in accordance with the provisions of Section 8-1.07 of the Standard Specifications.

Time Adjustment = 0 Days

Acceptance of this change order constitutes an agreement of full resolution of all time impact costs resulting from Change Order No. 82.

This change order acts to resolve the deferred time issued on Change Order No. 82, and no additional time shall be granted.

Estimated Cost: **Increase** ☐ **Decrease** ☐ **$0.00**

By reason of this order the time of completion will be adjusted as follows: 0 days

Signature	**Resident Engineer** Ben Ghafghazi	**Date** 4/7/2010
Signature	**Construction Engineer** Ben Ghafghazi	**Date** 4/7/2010
Signature	**Construction Manager** Amer Bata	**Date** 7/14/10

We the undersigned contractor, have given careful consideration to the change proposed and agree, if this proposal is approved, that we will provide all equipment, furnish the materials, except as may otherwise be noted above, and perform all services necessary for the work above specified, and will accept as full payment therefor the prices shown above.

NOTE: If you, the contractor, do not sign acceptance of this order, your attention is directed to the requirements of the specifications as to proceeding with the ordered work and filing a written protest within the time therein specified.

Signature	**(Print name and title)** JAMES A. CARTER, PRESIDENT	**Date** 7/14/10

STATE OF CALIFORNIA - DEPARTMENT OF TRANSPORTATION

CONTRACT CHANGE ORDER MEMORANDUM

DATE: 6/1/2010

TO: AMER BATA / BEN GHAFGHAZI

FROM: BEN GHAFGHAZI

FILE: **E.A.** 04 - 0120L4
CO-RTE-PM ALA-80-1.6/2.7
FED. NO. NO FED AID

CCO#: **82** SUPPLEMENT#: **2** Category Code: **CHSA**

CONTINGENCY BALANCE (incl. this change) **$1,460,088.90**

COST: **$75,000.00** INCREASE ☑ DECREASE ☐

HEADQUARTERS APPROVAL REQUIRED? ☐ YES ☑ NO

SUPPLEMENTAL FUNDS PROVIDED: **$0.00**

IS THIS REQUEST IN ACCORDANCE WITH ENVIRONMENTAL DOCUMENTS? ☑ YES ☐ NO

CCO DESCRIPTION:
Additional Funds for ISD

PROJECT DESCRIPTION:
Construct bridge, roadway, building and electrical system.

Original Contract Time:	Time Adj. This Change:	Previously Approved CCO Time Adjustments:	Percentage Time Adjusted: (including this change)	Total # of Unreconciled Deferred Time CCO(s): (including this change)
810 Day(s)	0 Day(s)	184 Day(s)	23 %	0

THIS CHANGE ORDER PROVIDES FOR:

Additional funds to provide professional design services to produce integrated shop drawings for Bridge No. 34-0006L and Bridge No. 34-0006R beyond that required by Section 5-1.15, "Integrated Shop Drawings," of the Special Provisions, as determined by the Engineer.

Contract Change Order No. 82, Supplement 0, was issued to produce new drawings due to various changes that were made as a result of CCO's that corrected plan errors. ISD's are required to resolve conflicts between planned positions of embedded items, reinforcing, and concrete cover. However, the cost of this change order has exceeded the original anticipated cost of $50,000.00, and it is now determined that an additional cost of $75,000.00 is needed to complete the work of this change order. The Contractor is still responsible for resolving conflicts for planned embeds per Section 5-1.15 of the Special Provisions, as originally provided by CCO 82, Supplement 0.

This work will be paid as Extra Work at Force Account for $75,000.00, which can be financed from the contingency fund.

Design and Maintenance concurrence is not necessary since this change is for administrative purposes only. Mehran Ardakanian, Senior Bridge Engineer, concurs with this change order.

No adjustment of contract time is warranted as this change does not affect the controlling operation.

CONCURRED BY:

Construction Engineer:	Ben Ghafghazi	Date 6/1/2010
Bridge Engineer:	Mehran Ardakanian	Date 5/20/10
Project Engineer:		Date
Project Manager:		Date
FHWA Rep.:		Date
Environmental:		Date
Other (specify):		Date
Other (specify):		Date
District Prior Approval By:		Date
HQ (Issue Approve) By:		Date
Resident Engineer's Signature:		Date 6/1/2010

ESTIMATE OF COST

	THIS REQUEST	TOTAL TO DATE
ITEMS	$0.00	$0.00
FORCE ACCOUNT	$75,000.00	$125,000.00
AGREED PRICE	$0.00	$0.00
ADJUSTMENT	$0.00	$0.00
TOTAL	$75,000.00	$125,000.00

FEDERAL PARTICIPATION

☐ PARTICIPATING ☐ PARTICIPATING IN PART ☑ NONE
☐ NON-PARTICIPATING (MAINTENANCE) ☐ NON-PARTICIPATING

FEDERAL SEGREGATION (if more than one Funding Source or P.I.P. type)
☑ CCO FUNDED PER CONTRACT ☐ CCO FUNDED AS FOLLOWS

FEDERAL FUNDING SOURCE	PERCENT

ADA Notice: For individuals with sensory disabilities, this document is available in alternate formats. For information call: (916) 654-6410 or TDD (916) 654-3880 or write Records and Forms Management, 1120 N Street, MS-89, Sacramento, CA 95814.

STATE OF CALIFORNIA - DEPARTMENT OF TRANSPORTATION

CONTRACT CHANGE ORDER

Change Requested by: Engineer

CCO: 82	Suppl. No. 2	Contract No. 04 - 0120L4	Road ALA-80-1.6/2.7	FED. AID LOC.: NO FED AID

To: **M C M CONSTRUCTION INC**

You are directed to make the following changes from the plans and specifications or do the following described work not included in the plans and specifications for this contract. ***NOTE: This change order is not effective until approved by the Engineer.***

Description of work to be done, estimate of quantities and prices to be paid. (Segregate between additional work at contract price, agreed price and force account.) Unless otherwise stated, rates for rental of equipment cover only such time as equipment is actually used and no allowance will be made for idle time. This last percentage shown is the net accumulated increase or decrease from the original quantity in the Engineer's Estimate.

Extra Work at Force Account:

Additional funds to provide professional design services to produce integrated shop drawings for Bridge No. 34-0006L and Bridge No. 34-0006R beyond that required by Section 5-1.15, "Integrated Shop Drawings," of the Special Provisions, as determined by the Engineer.

Estimated cost of Extra Work at Force Account $75,000.00

Estimated Cost: Increase ☑ **Decrease** ☐ **$75,000.00**

By reason of this order the time of completion will be adjusted as follows: 0 days

Signature	**Resident Engineer** Ben Ghafghazi	**Date** 6/1/2010
Signature	**Construction Engineer** Ben Ghafghazi	**Date** 6/1/2010
Signature	**Construction Manager** Amer Bata	**Date** 6/2/10

We the undersigned contractor, have given careful consideration to the change proposed and agree, if this proposal is approved, that we will provide all equipment, furnish the materials, except as may otherwise be noted above, and perform all services necessary for the work above specified, and will accept as full payment therefor the prices shown above.

NOTE: If you, the contractor, do not sign acceptance of this order, your attention is directed to the requirements of the specifications as to proceeding with the ordered work and filing a written protest within the time therein specified.

Signature Not Required	**(Print name and title)**	**Date**

STATE OF CALIFORNIA - DEPARTMENT OF TRANSPORTATION

CONTRACT CHANGE ORDER

Change Requested by: Engineer

CCO 83	Suppl. No. 0	Contract No. 04 - 0120L4	Road ALA-80-1.6/2.7	FED. AID LOC.: NO FED AID

M C M CONSTRUCTION INC

You are directed to make the following changes from the plans and specifications or do the following described work not included in the plans and specifications for this contract. ***NOTE: This change order is not effective until approved by the Engineer.***

Description of work to be done, estimate of quantities and prices to be paid. (Segregate between additional work at contract price, agreed price and force account.) Unless otherwise stated, rates for rental of equipment cover only such time as equipment is actually used and no allowance will be made for idle time. This last percentage shown is the net accumulated increase or decrease from the original quantity in the Engineer's Estimate.

Extra Work at Force Account:

At Bridge No. 34-0006L, provide two 200mm X 500mm blockout openings for the electrical conduits at Girder H between Bent E20L and the first intermediate diaphragm at Bent E21L per details on sheet 2 of 2 of this CCO. All work shall be in accordance with Section 10-1.67, "Reinforcement," of the Special Provisions.

Estimated cost of Extra Work at Force Account $2,000.00

Estimated Cost: Increase ☑ **Decrease** ☐ **$2,000.00**

By reason of this order the time of completion will be adjusted as follows: 0 days

Submitted by

Signature	Resident Engineer BEN GHAFGHAZI	Date 12/5/08

Approval Recommended by

Signature	Construction Engineer Ben Ghafghazi	Date 12/5/08

Engineer Approval by

Signature	Construction Engineer Ben Ghafghazi	Date 12/19/08

We the undersigned contractor, have given careful consideration to the change proposed and agree, if this proposal is approved, that we will provide all equipment, furnish the materials, except as may otherwise be noted above, and perform all services necessary for the work above specified, and will accept as full payment therefor the prices shown above.

NOTE: If you, the contractor, do not sign acceptance of this order, your attention is directed to the requirements of the specifications as to proceeding with the ordered work and filing a written protest within the time therein specified.

Contractor Acceptance by

Signature	(Print name and title) EDMUNDO A. PUCHI, TREASURER	Date 12/17/08

To get to the Caltrans web site, go to: http://www.dot.ca.gov

DIST	COUNTY	ROUTE	KILOMETER POST TOTAL PROJECT	SHEET NO.	TOTAL SHEETS
04	Ala	80	1.6/2.7	209S	643

Caltrans Metric

REGISTERED ENGINEER - CIVIL

11-21-08

PLANS APPROVAL DATE

REGISTERED PROFESSIONAL ENGINEER VINH DIEU TRINH No. 50685 Exp. 9-30-2009 CIVIL STATE OF CALIFORNIA

The State of California or its officers or agents shall not be responsible for the accuracy or completeness of electronic copies of this plan sheet.

T.Y. LIN / MOFFATT & NICHOL
TWO HARRISON STREET, SUITE 500
SAN FRANCISCO, CA 94105

WKE, INC
250 GODDARD
IRVINE, CA 92618

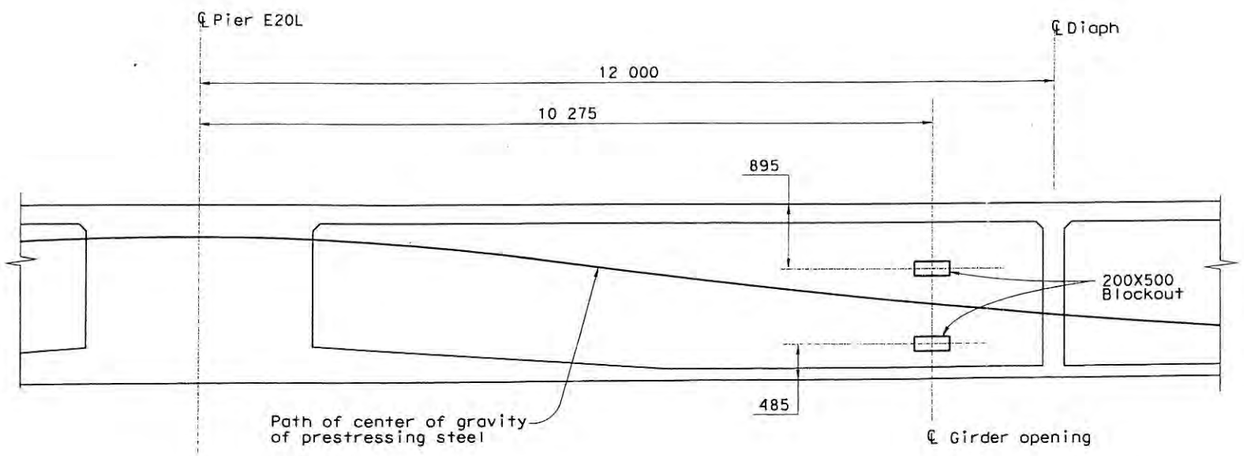

GIRDER H - GIRDER OPENING
No Scale

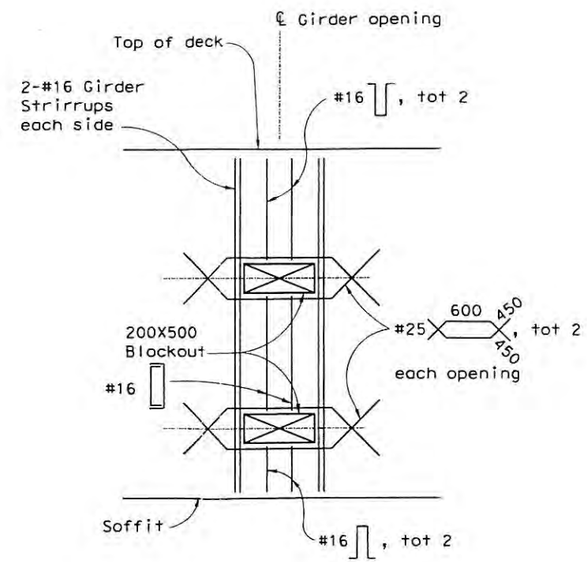

GIRDER OPENING DETAIL
1:20

SUPPLEMENTAL SHEET
CONTRACT CHANGE ORDER NO. 83
SHEET 2 OF 2

04-0120L4 12/03/08

ALL DIMENSIONS ARE IN MILLIMETERS UNLESS OTHERWISE SHOWN

SAN FRANCISCO OAKLAND BAY BRIDGE
EAST SPAN SEISMIC SAFETY PROJECT

OAKLAND APPROACH STRUCTURES-PHASE 1

WESTBOUND GIRDER DETAILS NO. 2

DESIGN OVERSIGHT
BERNARD CHAN HASAN EL-NATUR
SIGN OFF DATE

DESIGN BY V. Trinh CHECKED Y. Shangkuan
DETAILS BY N. Shu CHECKED V. Trinh
QUANTITIES BY CHECKED

PREPARED FOR THE STATE OF CALIFORNIA DEPARTMENT OF TRANSPORTATION

Vinh Trinh
PROJECT ENGINEER

BRIDGE NO. 34-0006L/R
KILOMETER POST 1.6

CU 04
EA 0120L1

Rev. Date: 5-18-98

ORIGINAL SCALE IN MILLIMETERS FOR REDUCED PLANS 0 10 20 30 40 50 60 70 80 90 100

DISREGARD PRINTS BEARING EARLIER REVISION DATES 11/21/08

REVISION DATES (PRELIMINARY STAGE ONLY)

SHEET 96S OF 224

FILE => $REQUEST

USERNAME => $USER DATE PLOTTED => $DATE TIME PLOTTED => $TIME

STATE OF CALIFORNIA - DEPARTMENT OF TRANSPORTATION

CONTRACT CHANGE ORDER MEMORANDUM

DATE: 12/3/2008 Page 1 of 1

TO: AMER BATA / BEN GHAFGHAZI	FILE: **E.A.** 04 - 0120L4
FROM: BEN GHAFGHAZI	**CO-RTE-PM** ALA-80-1.6/2.7
	FED. NO. NO FED AID
CCO#: **83** SUPPLEMENT#: **0** Category Code: **CHPT**	CONTINGENCY BALANCE (incl. this change) **$9,856,234.20**
COST: **$20,000.00** INCREASE ☑ DECREASE ☐	HEADQUARTERS APPROVAL REQUIRED? ☐ YES ☑ NO
SUPPLEMENTAL FUNDS PROVIDED: **$0.00**	IS THIS REQUEST IN ACCORDANCE WITH ENVIRONMENTAL DOCUMENTS? ☑ YES ☐ NO
CCO DESCRIPTION: Blockout Girder H Bridge 34-0006L.	**PROJECT DESCRIPTION:** Construct bridge, roadway, building and electrical system.

Original Contract Time:	Time Adj. This Change:	Previously Approved CCO Time Adjustments:	Percentage Time Adjusted: (including this change)	Total # of Unreconciled Deferred Time CCO(s): (including this change)
810 Day(s)	**0** Day(s)	**9** Day(s)	**1** %	**7**

THIS CHANGE ORDER PROVIDES FOR:

Placing blockout openings at Bridge No. 34-0006L for the electrical conduits as shown on sheet 2 of 5 through 5 of 5 of the CCO.

This change is necessary because the contract plans do not have a detail for placing the conduits through the girders.

This work will be paid as Extra Work at Force Account for $20,000.00, which can be financed from the contingency fund.

This change has been discussed and concurred with Hasan El-Natur of Structures Design and Lina Ellis of Structures Maintenance.

No adjustment of contract time is warranted since this change does not affect the controlling operation.

CONCURRED BY:		
Construction Engineer:	Ben Ghafghazi	Date 12/11/07
Bridge Engineer:	Mehran Ardakanian	Date
Project Engineer:	Hasan El-Natur, Structures Design	Date 11/26/08
Project Manager:		Date
FHWA Rep.:		Date
Environmental:		Date
Other (specify):	Lina Ellis, Structures Maint.	Date 12/2/08
Other (specify):		Date
District Prior Approval By:		Date
HQ (Issue Approve) By:		Date
Resident Engineer's Signature		Date 12/11/07

ESTIMATE OF COST

	THIS REQUEST	TOTAL TO DATE
ITEMS	$0.00	$0.00
FORCE ACCOUNT	$20,000.00	$20,000.00
AGREED PRICE	$0.00	$0.00
ADJUSTMENT	$0.00	$0.00
TOTAL	$20,000.00	$20,000.00

FEDERAL PARTICIPATION

☐ PARTICIPATING ☐ PARTICIPATING IN PART ☑ NONE
☐ NON-PARTICIPATING (MAINTENANCE) ☐ NON-PARTICIPATING

FEDERAL SEGREGATION (if more than one Funding Source or P.I.P. type)
☑ CCO FUNDED PER CONTRACT ☐ CCO FUNDED AS FOLLOWS

FEDERAL FUNDING SOURCE	PERCENT

ADA Notice: For individuals with sensory disabilities, this document is available in alternate formats For information call: (916) 654-6410 or TDD (916) 654-3880 or write Records and Forms Management, 1120 N Street, MS-89, Sacramento, CA 95814.

STATE OF CALIFORNIA - DEPARTMENT OF TRANSPORTATION

CONTRACT CHANGE ORDER

Change Requested by: Engineer

CCO 84	Suppl. No. 0	Contract No. 04 - 0120L4	Road ALA-80-1.6/2.7	FED. AID LOC.: NO FED AID

To: **M C M CONSTRUCTION INC**

You are directed to make the following changes from the plans and specifications or do the following described work not included in the plans and specifications for this contract. ***NOTE: This change order is not effective until approved by the Engineer.***

Description of work to be done, estimate of quantities and prices to be paid. (Segregate between additional work at contract price, agreed price and force account.) Unless otherwise stated, rates for rental of equipment cover only such time as equipment is actually used and no allowance will be made for idle time. This last percentage shown is the net accumulated increase or decrease from the original quantity in the Engineer's Estimate.

A determination of the delay in completion of the contract due to suspension of concrete pour at Frame 1 been made in accordance with Section 8-1.07, "Liquidated Damages," of the Standard Specifications. A time extension of 7 days will be granted as follows:

December 6, 7, 8, 9, 10, 11, and 12, 2008

Adjustment of Compensation at Unit Price:

In accordance with Section 10-1.15, "Time Related Overhead," of the Special Provisions, the contractor will be paid $24,691.36 per day of Time Related Overhead for 7 days. This price constitutes full compensation, including all markups, for the work of this change.

Item #6: Time Related Overhead
7 WDAY (+0.9%) @ $24,691.36/WDAY= +$172,839.52 (+12.1%)

Adjustment of Compensation at Agreed Unit Price $172,839.52

The Contractor agrees to accept the sum of $10,000.00 per day for 7 days for all impact costs including, but not limited to, equipment, escalations and inefficiencies, incurred due to the Department delays recognized under this change order and not included in the compensation provided under Time Related Overhead. This price constitutes full compensation, including all markups, for all outstanding impact costs resulting from this change order.

7 days @ $10,000 per day = $70,000.00

Adjustment of Compensation at Agreed Unit Price $70,000.00

Total Adjustment of Compensation at Agreed Unit Price $242,839.52

Estimated Cost: Increase ☑ **Decrease** ☐ **$242,839.52**

By reason of this order the time of completion will be adjusted as follows: 7 days

Submitted by

Signature	Resident Engineer	Date
William Howe	FOR BEN GHAFGHAZI	2-13-09

Approval Recommended by

Signature	Construction Manager	Date
	Amer Bata	2/13/09

Engineer Approval by

Signature	Construction Manager	Date
	Amer Bata	4/27/09

We the undersigned contractor, have given careful consideration to the change proposed and agree, if this proposal is approved, that we will provide all equipment, furnish the materials, except as may otherwise be noted above, and perform all services necessary for the work above specified, and will accept as full payment therefor the prices shown above.

NOTE: If you, the contractor, do not sign acceptance of this order, your attention is directed to the requirements of the specifications as to proceeding with the ordered work and filing a written protest within the time therein specified.

Contractor Acceptance by

Signature	(Print name and title)	Date
	EDMUNDO A. PUCHI, TREASURER	2/23/09

STATE OF CALIFORNIA - DEPARTMENT OF TRANSPORTATION

CONTRACT CHANGE ORDER MEMORANDUM

DATE: 2/2/2009 Page 1 of 1

TO: AMER BATA / BEN GHAFGHAZI	FILE: E.A. 04 - 0120L4
FROM: BEN GHAFGHAZI	CO-RTE-PM ALA-80-1.6/2.7
	FED. NO. NO FED AID
CCO#: 84 SUPPLEMENT#: 0 Category Code: AFZZ	CONTINGENCY BALANCE (incl. this change) $9,701,018.20
COST: $242,839.52 INCREASE ☑ DECREASE ☐	HEADQUARTERS APPROVAL REQUIRED? ☑ YES ☐ NO
SUPPLEMENTAL FUNDS PROVIDED: $0.00	IS THIS REQUEST IN ACCORDANCE WITH ENVIRONMENTAL DOCUMENTS? ☑ YES ☐ NO
CCO DESCRIPTION: Suspend concrete pour at Frame 1.	**PROJECT DESCRIPTION:** Construct bridge, roadway, building and electrical system.

Original Contract Time:	Time Adj. This Change:	Previously Approved CCO Time Adjustments:	Percentage Time Adjusted: (including this change)	Total # of Unreconciled Deferred Time CCO(s): (including this change)
810 Day(s)	7 Day(s)	171 Day(s)	22 %	5

THIS CHANGE ORDER PROVIDES FOR:

An adjustment of contract time in accordance with Section 8-1.07, "Liquidated Damages," of the Standard Specifications, Sections 10-1.15, "Time Related Overhead," and Section 4, "Beginning of Work, Time of Completion and Liquidated Damages," of the Special Provisions. A time extension of 7 days will be granted as follows: December 6 through 12, 2008.

This change is necessary because the Contractor was ordered to suspend the Frame 1 bridge stem concrete pour on the weekend of December 6 to accommodate a concrete pour for contract 04-0120F4, Self Anchored Suspension Span (SAS). SAS takes priority over all other contracts on the SFOBB corridor since it is the controlling project. The Contractor was not able to reschedule the pour until the following weekend due to batch plant availability. Two batch plants are required due to the size of this pour. The only time that the supplier can dedicate two plants full time is on weekends. A Time Impact Analysis has been performed in accordance with Section 10-1.14, "Progress Schedule (Critical Path Method)," subsection "Time Impact Analysis," of the Special Provisions and is on file in the project records.

This CCO will be paid as an Adjustment of Compensation at Agreed Unit Price of $24,691.36 per day for 7 days for a total of $172,839.52, which can be financed from the contingency fund. This adjustment of compensation was calculated in accordance with Section 10-1.15, "Time Related Overhead," of the Special Provisions. Total increase in Item #6, "Time Related Overhead," as a result of this change is 12.1%. Compensation for extended project equipment and material costs will be paid as an adjustment of compensation at an agreed unit price of $10,000.00 per day for 7 days for a total of $70,000.00. The total cost of this change order is $242,839.52, which shall be financed from the contingency fund. This sum constitutes full compensation, including markups, for this change. A detailed cost analysis is on file in the Resident Engineer's office.

This change has been discussed and concurred with Patrick Treacy, HQ Coordinator; Mike Forner, SFOBB Construction Manager; and Ken Terpstra, Project Manager. Design and Maintenance concurrence is not necessary because this CCO is for time adjustment only. An Issue and Approve was granted by Headquarters on February 17, 2009.

CONCURRED BY:

Construction Engineer:	Ben Ghafghazi	Date	4/20/09
Bridge Engineer:		Date	
Project Engineer:		Date	
Project Manager:	Ken Terprstra	Date	1/30/09
FHWA Rep.:		Date	
Environmental:		Date	
Other (specify):	Patrick Treacy, HQ Const. Coord.	Date	2/2/09
Other (specify):		Date	
District Prior Approval By:	Mike Forner, Principal TE	Date	1/30/09
HQ (Issue Approve) By:	Bob Molera	Date	2/17/09
Resident Engineer's Signature:		Date	4/20/09

ESTIMATE OF COST

	THIS REQUEST	TOTAL TO DATE
ITEMS	$0.00	$0.00
FORCE ACCOUNT	$0.00	$0.00
AGREED PRICE	$0.00	$0.00
ADJUSTMENT	$242,839.52	$242,839.52
TOTAL	$242,839.52	$242,839.52

FEDERAL PARTICIPATION

☐ PARTICIPATING ☐ PARTICIPATING IN PART ☑ NONE
☐ NON-PARTICIPATING (MAINTENANCE) ☐ NON-PARTICIPATING

FEDERAL SEGREGATION (if more than one Funding Source or P.I.P. type)
☑ CCO FUNDED PER CONTRACT ☐ CCO FUNDED AS FOLLOWS

FEDERAL FUNDING SOURCE	PERCENT

ADA Notice: For individuals with sensory disabilities, this document is available in alternate formats. For information call: (916) 654-6410 or TDD (916) 654-3880 or write Records and Forms Management, 1120 N Street, MS-89, Sacramento, CA 95814.

STATE OF CALIFORNIA - DEPARTMENT OF TRANSPORTATION

CONTRACT CHANGE ORDER

Change Requested by: Engineer

CCO: 85	Suppl. No. 0	Contract No. 04 - 0120L4	Road ALA-80-1.6/2.7	FED. AID LOC.: NO FED AID

To: **M C M CONSTRUCTION INC**

You are directed to make the following changes from the plans and specifications or do the following described work not included in the plans and specifications for this contract. ***NOTE: This change order is not effective until approved by the Engineer.***

Description of work to be done, estimate of quantities and prices to be paid. (Segregate between additional work at contract price, agreed price and force account.) Unless otherwise stated, rates for rental of equipment cover only such time as equipment is actually used and no allowance will be made for idle time. This last percentage shown is the net accumulated increase or decrease from the original quantity in the Engineer's Estimate.

Extra Work at Force Account:

Revise the exterior girder edge of deck Construction Joint for the Eastbound and Westbound Oakland Touchdown Superstructure by adding a bulkhead to be able to pour to the top of the exterior face of the girder (vertical joint) at the following locations: Frame 1 (Hinge EW to Hinge FW) and Frame 2 (Hinge FW to abutment 23L) on both the North and South side and Frame 1 (Hinge EE to Hinge FE) only the North side. Detail is shown on sheet 2 of 2 of this CCO. All work shall be in accordance with Section 10-1.53, "Concrete Structures," of the Special Provisions.

Estimated cost of Extra Work at Force Account $50,000.00

Consideration of a time adjustment will be deferred until completion of the work specified herein. Determination of a commensurate time extension will be made in accordance with Section 10-1.14, "Progress Schedule (Critical Path Method)," of the Special Provisions and Section 8-1.07, "Liquidated Damages," of the Standard Specifications.

Estimated Cost: **Increase** ☑ **Decrease** ☐ **$50,000.00**

By reason of this order the time of completion will be adjusted as follows: Deferred

Submitted by

Signature	Resident Engineer BEN GHAFGHAZI	Date 12/19/08

Approval Recommended by

Signature	Construction Engineer Ben Ghafghazi	Date 12/19/08

Engineer Approval by

Signature	Construction Engineer Ben Ghafghazi	Date 1/13/09

We the undersigned contractor, have given careful consideration to the change proposed and agree, if this proposal is approved, that we will provide all equipm furnish the materials, except as may otherwise be noted above, and perform all services necessary for the work above specified, and will accept as full paymer therefor the prices shown above.

NOTE: If you, the contractor, do not sign acceptance of this order, your attention is directed to the requirements of the specifications as to proceeding with the ordered work and filing a written protest within the time therein specified.

Contractor Acceptance by

Signature	(Print name and title) EDMUNDO A. PUCHI, TREASURER	Date 1/5/09

DIST	COUNTY	ROUTE	KILOMETER POST TOTAL PROJECT	SHEET NO.	TOTAL SHEETS
04	Ala	80	1.6/2.7	000	000

REGISTERED ENGINEER - CIVIL

12-09-08
PLANS APPROVAL DATE

REGISTERED PROFESSIONAL ENGINEER
Thanh Dickerson
No. 50814
Exp. 9/30/09
CIVIL
STATE OF CALIFORNIA

The State of California or its officers or agents shall not be responsible for the accuracy or completeness of electronic copies of this plan sheet.

To get to the Caltrans web site, go to: http://www.dot.ca.gov

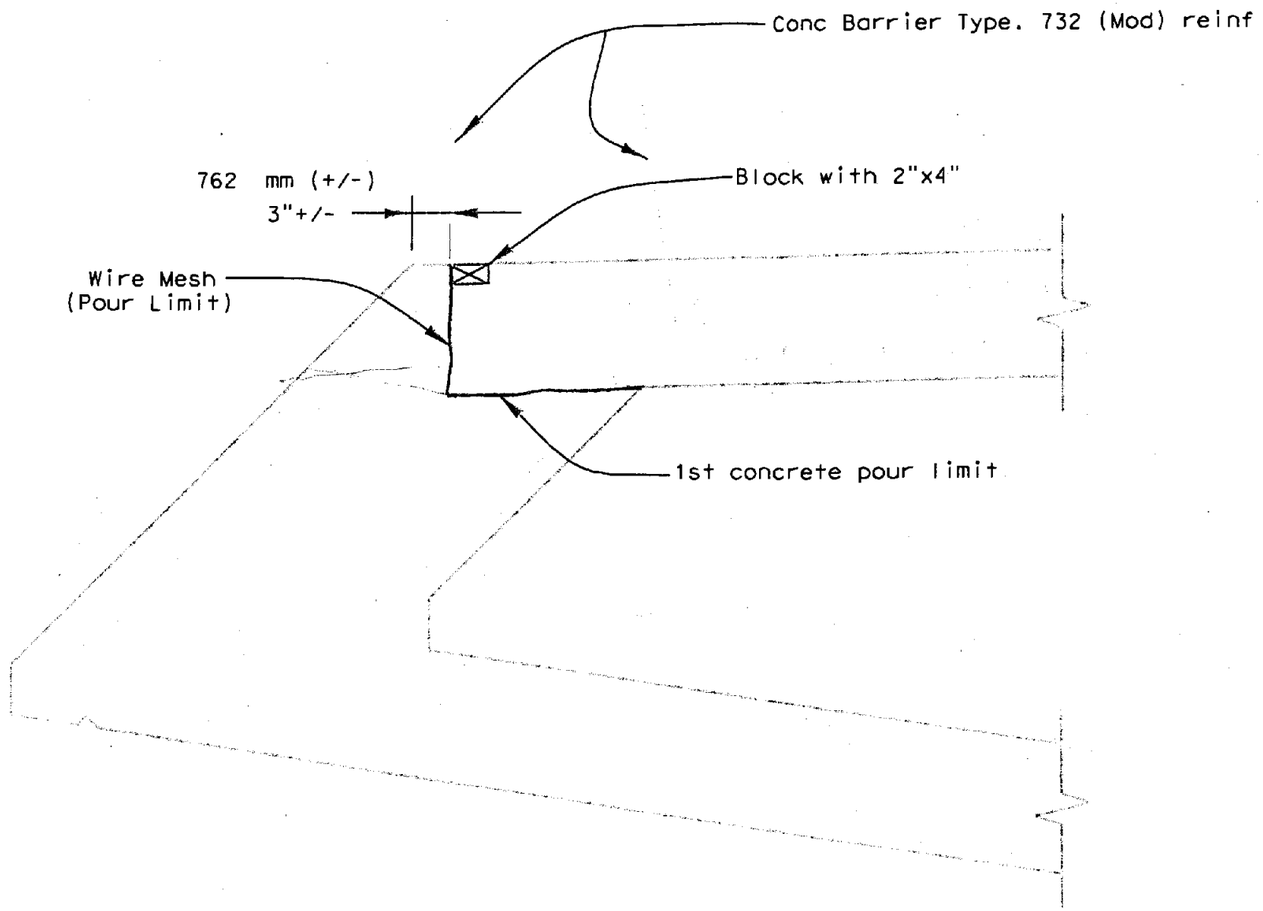

COLD JOINT DETAIL (TYP.)

Not to Scale

Contract No. 04-0120L4
Page 2 of 2
CCO No. 85 Suppl. No. Ø
Contractor MCM
Res. Engr. B. Ghafghazi
12/10/08

ALL DIMENSIONS ARE IN MILLIMETERS UNLESS OTHERWISE SHOWN

SAN FRANCISCO OAKLAND BAY BRIDGE
EAST SPAN SEISMIC SAFETY PROJECT

COLD JOINT

WESTBOUND TYPICAL SECTION

DESIGN OVERSIGHT	DESIGN	BY	CHECKED	PREPARED FOR THE STATE OF CALIFORNIA DEPARTMENT OF TRANSPORTATION	PROJECT ENGINEER	BRIDGE NO. 34-0006L/R
00-00-00 SIGN OFF DATE	DETAILS	BY	CHECKED			KILOMETER POST 1.6
	QUANTITIES	BY	CHECKED			

Rev. Date: 5-15-98

ORIGINAL SCALE IN MILLIMETERS FOR REDUCED PLANS 0 10 20 30 40 50 60 70 80 90 100

CU 04
EA 0120L4

FILE => $REQUEST

DISREGARD PRINTS DEARING EARLIER REVISION DATES

REVISION DATES (PRELIMINARY STAGE ONLY) 5/9/05 10/28/05 5/26/06 10/26/06 2/26/05 5/26/05 11/26/05 1/26/06 4/26/06 7/26/06

SHEET 00 OF 000

USERNAME => $USER DATE PLOTTED => $DATE TIME PLOTTED => $TIME

STATE OF CALIFORNIA - DEPARTMENT OF TRANSPORTATION

CONTRACT CHANGE ORDER MEMORANDUM

DATE: 12/5/2008 Page 1 of 1

TO: AMER BATA / BEN GHAFGHAZI	FILE: E.A. 04 - 0120L4
FROM: BEN GHAFGHAZI	CO-RTE-PM ALA-80-1.6/2.7
	FED. NO. NO FED AID
CCO#: 85 SUPPLEMENT#: 0 Category Code: CHPT	CONTINGENCY BALANCE (incl. this change) $9,886,234.20
COST: $50,000.00 INCREASE ☑ DECREASE ☐	HEADQUARTERS APPROVAL REQUIRED? ☐ YES ☑ NO
SUPPLEMENTAL FUNDS PROVIDED: $0.00	IS THIS REQUEST IN ACCORDANCE WITH ENVIRONMENTAL DOCUMENTS? ☑ YES ☐ NO
CCO DESCRIPTION: Revise exterior girder cold joint.	**PROJECT DESCRIPTION:** Construct bridge, roadway, building and electrical system.

Original Contract Time:	Time Adj. This Change:	Previously Approved CCO Time Adjustments:	Percentage Time Adjusted: (including this change)	Total # of Unreconciled Deferred Time CCO(s): (including this change)
810 Day(s)	DEF Day(s)	9 Day(s)	1 %	7

THIS CHANGE ORDER PROVIDES FOR:

Revising the exterior girder edge of deck Construction Joint for the Eastbound and Westbound Oakland Touchdown Superstructure at the following locations: Frame 1 (Hinge EW to Hinge FW) and Frame 2 (Hinge FW to abutment 23L) on both the North and South side and Frame 1 (Hinge EE to Hinge FE) only the North side.

In order to provide a uniform surface on the exterior girders, we are adding a bulkhead to be able to pour to the top of the exterior face of the girder (vertical joint), as a result eliminating the unsightly cold joint (horizontal joint) that would have been visible in a conventional pour. All work shall be in accordance with Section 10-1.53, "Concrete Structures," of the Special Provisions.

Design and Maintenance concurrence is not necessary since this change since this CCO only addresses construction methods.

Adjustment of contract time is deferred pending completion of the work specified in this change as it may affect the controlling operation.

CONCURRED BY:

Construction Engineer:	Ben Ghafghazi	Date 12/19/08
Bridge Engineer:	Mehran Ardakanian	Date 01/15/09
Project Engineer:		Date
Project Manager:		Date
FHWA Rep.:		Date
Environmental:		Date
Other (specify):		Date
Other (specify):		Date
District Prior Approval By:		Date
HQ (Issue Approve) By:		Date
Resident Engineer's Signature:		Date 12/19/08

ESTIMATE OF COST

	THIS REQUEST	TOTAL TO DATE
ITEMS	$0.00	$0.00
FORCE ACCOUNT	$50,000.00	$50,000.00
AGREED PRICE	$0.00	$0.00
ADJUSTMENT	$0.00	$0.00
TOTAL	$50,000.00	$50,000.00

FEDERAL PARTICIPATION

☐ PARTICIPATING ☐ PARTICIPATING IN PART ☑ NONE
☐ NON-PARTICIPATING (MAINTENANCE) ☐ NON-PARTICIPATING

FEDERAL SEGREGATION (if more than one Funding Source or P.I.P. type)
☑ CCO FUNDED PER CONTRACT ☐ CCO FUNDED AS FOLLOWS

FEDERAL FUNDING SOURCE	PERCENT

ADA Notice: For individuals with sensory disabilities, this document is available in alternate formats. For information call: (916) 654-6410 or TDD (916) 654-3880 or write Records and Forms Management, 1120 N Street, MS-89, Sacramento, CA 95814.

STATE OF CALIFORNIA - DEPARTMENT OF TRANSPORTATION

CONTRACT CHANGE ORDER MEMORANDUM

DATE: 3/17/2009 Page 1 of 1

TO: AMER BATA / BEN GHAFGHAZI	FILE: E.A. 04 - 0120L4
FROM: BEN GHAFGHAZI	CO-RTE-PM ALA-80-1.6/2.7
	FED. NO. NO FED AID
CCO#: 85 SUPPLEMENT#: 1 Category Code: CHPT	CONTINGENCY BALANCE (incl. this change) $8,570,291.20
COST: $0.00 INCREASE ☐ DECREASE ☐	HEADQUARTERS APPROVAL REQUIRED? ☐ YES ☑ NO
SUPPLEMENTAL FUNDS PROVIDED: $0.00	IS THIS REQUEST IN ACCORDANCE WITH ENVIRONMENTAL DOCUMENTS? ☑ YES ☐ NO
CCO DESCRIPTION: Revise EB exterior cold joint.	**PROJECT DESCRIPTION:** Construct bridge, roadway, building and electrical system.

Original Contract Time:	Time Adj. This Change:	Previously Approved CCO Time Adjustments:	Percentage Time Adjusted: (including this change)	Total # of Unreconciled Deferred Time CCO(s): (including this change)
810 Day(s)	DEF Day(s)	184 Day(s)	23 %	8

THIS CHANGE ORDER PROVIDES FOR:

Eliminating the modified edge of deck construction joint specified under CCO 85 Supplement 0 from the eastbound structure.

In order to provide a uniform surface on the exterior girders, CCO 85 Supplement 0 added a bulkhead to be able to pour to the top of the exterior face of the girder (vertical joint), which was to eliminate the cold joint (horizontal joint) that would have been visible in a conventional pour. This work was performed on the westbound structure and did not produce the intended product as desired, therefore, the bulkhead will be eliminated for the eastbound structure. The work will be performed per the contract plans. All work shall be in accordance with Section 10-1.53, "Concrete Structures," of the Special Provisions.

There shall be no additional cost for this CCO.

Design and Maintenance concurrence is not necessary since this change since this CCO only addresses construction methods.

Adjustment of contract time is deferred pending completion of the work specified in this change as it may affect the controlling operation.

CONCURRED BY:		
Construction Engineer:	Ben Ghafghazi	Date 3/19/09
Bridge Engineer:	Mehran Ardakanian	Date 03/19/09
Project Engineer:		Date
Project Manager:		Date
FHWA Rep.:		Date
Environmental:		Date
Other (specify):		Date
Other (specify):		Date
District Prior Approval By:		Date
HQ (Issue Approve) By:		Date
Resident Engineer's Signature:		Date 3/19/09

ESTIMATE OF COST

	THIS REQUEST	TOTAL TO DATE
ITEMS	$0.00	$0.00
FORCE ACCOUNT	$0.00	$50,000.00
AGREED PRICE	$0.00	$0.00
ADJUSTMENT	$0.00	$0.00
TOTAL	$0.00	$50,000.00

FEDERAL PARTICIPATION

☐ PARTICIPATING ☐ PARTICIPATING IN PART ☑ NONE
☐ NON-PARTICIPATING (MAINTENANCE) ☐ NON-PARTICIPATING

FEDERAL SEGREGATION (if more than one Funding Source or P.I.P. type)
☑ CCO FUNDED PER CONTRACT ☐ CCO FUNDED AS FOLLOWS

FEDERAL FUNDING SOURCE	PERCENT

ADA Notice: For individuals with sensory disabilities, this document is available in alternate formats. For information call: (916) 654-6410 or TDD (916) 654-3880 or write Records and Forms Management, 1120 N Street, MS-89, Sacramento, CA 95814.

STATE OF CALIFORNIA - DEPARTMENT OF TRANSPORTATION

CONTRACT CHANGE ORDER

Change Requested by: Engineer

CCO 85	Suppl. No. 1	Contract No. 04 - 0120L4	Road ALA-80-1.6/2.7	FED. AID LOC.: NO FED AID

M C M CONSTRUCTION INC

You are directed to make the following changes from the plans and specifications or do the following described work not included in the plans and specifications for this contract. ***NOTE: This change order is not effective until approved by the Engineer.***

Description of work to be done, estimate of quantities and prices to be paid. (Segregate between additional work at contract price, agreed price and force account.) Unless otherwise stated, rates for rental of equipment cover only such time as equipment is actually used and no allowance will be made for idle time. This last percentage shown is the net accumulated increase or decrease from the original quantity in the Engineer's Estimate.

Eliminate the modified edge of deck construction joint specified under CCO 85 Supplement 0 from the eastbound structure. Place construction joint per contract plans. All work shall be in accordance with Section 10-1.53, "Concrete Structures," of the Special Provisions.

There shall be no additional cost for this CCO.

Consideration of a time adjustment will continue to be deferred until completion of the work specified under CCO 85 Supplement 0. Determination of a commensurate time extension will be made in accordance with Section 10-1.14, "Progress Schedule (Critical Path Method)," of the Special Provisions and Section 8-1.07, "Liquidated Damages," of the Standard Specifications.

Estimated Cost: Increase ☐ **Decrease** ☐ **$0.00**

By reason of this order the time of completion will be adjusted as follows: Deferred

Submitted by

Signature	Resident Engineer BEN GHAFGHAZI	Date 3/19/09

Approval Recommended by

Signature	Construction Engineer Ben Ghafghazi	Date 3/19/09

Engineer Approval by

Signature	Construction Engineer Ben Ghafghazi	Date 4/6/09

We the undersigned contractor, have given careful consideration to the change proposed and agree, if this proposal is approved, that we will provide all equipment, furnish the materials, except as may otherwise be noted above, and perform all services necessary for the work above specified, and will accept as full payment therefor the prices shown above.

NOTE: If you, the contractor, do not sign acceptance of this order, your attention is directed to the requirements of the specifications as to proceeding with the ordered work and filing a written protest within the time therein specified.

Contractor Acceptance by

Signature	(Print name and title) EDMUNDO A. PUCHI, TREASURER	Date 3/30/09

STATE OF CALIFORNIA - DEPARTMENT OF TRANSPORTATION

CONTRACT CHANGE ORDER MEMORANDUM

DATE: 4/29/2009 Page 1 of 1

TO: AMER BATA / BEN GHAFGHAZI	FILE: E.A. 04 - 0120L4
FROM: BEN GHAFGHAZI	CO-RTE-PM ALA-80-1.6/2.7
	FED. NO. NO FED AID
CCO#: 85 SUPPLEMENT#: 2 Category Code: CHPT	CONTINGENCY BALANCE (incl. this change) $7,367,062.80
COST: $30,000.00 INCREASE ☑ DECREASE ☐	HEADQUARTERS APPROVAL REQUIRED? ☐ YES ☑ NO
SUPPLEMENTAL FUNDS PROVIDED: $0.00	IS THIS REQUEST IN ACCORDANCE WITH ENVIRONMENTAL DOCUMENTS? ☑ YES ☐ NO
CCO DESCRIPTION: Additional funds to revise cold joint.	**PROJECT DESCRIPTION:** Construct bridge, roadway, building and electrical system.

Original Contract Time:	Time Adj. This Change:	Previously Approved CCO Time Adjustments:	Percentage Time Adjusted: (including this change)	Total # of Unreconciled Deferred Time CCO(s): (including this change)
810 Day(s)	0 Day(s)	184 Day(s)	23 %	10

THIS CHANGE ORDER PROVIDES FOR:

Resolution of contract time and providing additional funds for CCO No. 85 for Bridge No. 34-0006L.

This change is necessary to pay for work ordered on westbound structure, Bridge No. 34-0006L. CCO 85 Supplement 1 eliminated this work from the eastbound structure, Bridge No. 34-0006R. In order to provide a uniform surface on the exterior girders, CCO 85 Supplement 0 added a bulkhead to be able to pour to the top of the exterior face of the girder (vertical joint), which eliminated the cold joint (horizontal joint) that would have been visible in a conventional pour.

Design and Maintenance concurrence is not necessary since this change since this CCO is for administrative purposes only.

A determination of the delay in completion of the contract due to the work specified by CCO No. 85 has been made in accordance with Section 10-1.14, "Progress Schedule (Critical Path Method)," of the Special Provisions and Section 8-1.07, "Liquidated Damages," of the Standard Specifications. The time impact is zero days.

CONCURRED BY:		
Construction Engineer:	Ben Ghafghazi	Date 5/1/09
Bridge Engineer:	Mehran Ardakanian	Date 4/30/09
Project Engineer:		Date
Project Manager:		Date
FHWA Rep.:		Date
Environmental:		Date
Other (specify):		Date
Other (specify):		Date
District Prior Approval By:		Date
HQ (Issue Approve) By:		Date
Resident Engineer's Signature:		Date 5/1/09

ESTIMATE OF COST

	THIS REQUEST	TOTAL TO DATE
ITEMS	$0.00	$0.00
FORCE ACCOUNT	$30,000.00	$80,000.00
AGREED PRICE	$0.00	$0.00
ADJUSTMENT	$0.00	$0.00
TOTAL	$30,000.00	$80,000.00

FEDERAL PARTICIPATION

☐ PARTICIPATING ☐ PARTICIPATING IN PART ☑ NONE
☐ NON-PARTICIPATING (MAINTENANCE) ☐ NON-PARTICIPATING

FEDERAL SEGREGATION (if more than one Funding Source or P.I.P. type)
☑ CCO FUNDED PER CONTRACT ☐ CCO FUNDED AS FOLLOWS

FEDERAL FUNDING SOURCE	PERCENT

ADA Notice: For individuals with sensory disabilities, this document is available in alternate formats. For information call: (916) 654-6410 or TDD (916) 654-3880 or write Records and Forms Management, 1120 N Street, MS-89, Sacramento, CA 95814.

STATE OF CALIFORNIA - DEPARTMENT OF TRANSPORTATION

CONTRACT CHANGE ORDER

Change Requested by: Engineer

CCO 85	Suppl. No. 2	Contract No. 04 - 0120L4	Road ALA-80-1.6/2.7	FED. AID LOC.: NO FED AID

To: **M C M CONSTRUCTION INC**

You are directed to make the following changes from the plans and specifications or do the following described work not included in the plans and specifications for this contract. ***NOTE: This change order is not effective until approved by the Engineer.***

Description of work to be done, estimate of quantities and prices to be paid. (Segregate between additional work at contract price, agreed price and force account.) Unless otherwise stated, rates for rental of equipment cover only such time as equipment is actually used and no allowance will be made for idle time. This last percentage shown is the net accumulated increase or decrease from the original quantity in the Engineer's Estimate.

Resolve contract time and provide additional funds for CCO No. 85 for Bridge No. 34-0006L. Work is as described below.

Extra Work at Force Account:

Revise the exterior girder edge of deck Construction Joint for the Westbound Oakland Touchdown Superstructure by adding a bulkhead to be able to pour to the top of the exterior face of the girder (vertical joint). Detail is per Sheet 2 of 2 of CCO #85. All work shall be in accordance with Section 10-1.53, "Concrete Structures," of the Special Provisions.

Estimated cost of Extra Work at Force Account $30,000.00

A determination of the delay in completion of the contract due to the work specified by CCO No. 85 has been made in accordance with Section 10-1.14, "Progress Schedule (Critical Path Method)," of the Special Provisions and Section 8-1.07, "Liquidated Damages," of the Standard Specifications. The time impact is zero days.

Estimated Cost: **Increase** ☑ **Decrease** ☐ **$30,000.00**

By reason of this order the time of completion will be adjusted as follows: 0 days

Submitted by		
Signature	**Resident Engineer** BEN GHAFGHAZI	**Date** 5/6/09
Approval Recommended by		
Signature	**Construction Engineer** Ben Ghafghazi	**Date** 5/6/09
Engineer Approval by		
Signature	**Construction Manager** Amer Bata	**Date** 6/5/09

We the undersigned contractor, have given careful consideration to the change proposed and agree, if this proposal is approved, that we will provide all equipment, furnish the materials, except as may otherwise be noted above, and perform all services necessary for the work above specified, and will accept as full payment therefor the prices shown above.

NOTE: If you, the contractor, do not sign acceptance of this order, your attention is directed to the requirements of the specifications as to proceeding with the ordered work and filing a written protest within the time therein specified.

Contractor Acceptance by		
Signature	**(Print name and title)** EDMUNDO A. PUCHI, TREASURER	**Date** 5/28/09

STATE OF CALIFORNIA - DEPARTMENT OF TRANSPORTATION

CONTRACT CHANGE ORDER MEMORANDUM

DATE: 12/3/2009 Page 1 of 1

TO: AMER BATA / BEN GHAFGHAZI

FROM: BEN GHAFGHAZI

FILE: E.A. 04 - 0120L4
CO-RTE-PM ALA-80-1.6/2.7
FED. NO. NO FED AID

CCO#: 85 SUPPLEMENT#: 3 Category Code: CHPT

CONTINGENCY BALANCE (incl. this change) $3,318,744.40

COST: $20,000.00 INCREASE ☑ DECREASE ☐

HEADQUARTERS APPROVAL REQUIRED? ☐ YES ☑ NO

SUPPLEMENTAL FUNDS PROVIDED: $0.00

IS THIS REQUEST IN ACCORDANCE WITH ENVIRONMENTAL DOCUMENTS? ☑ YES ☐ NO

CCO DESCRIPTION:
Additional funds to revise cold joint.

PROJECT DESCRIPTION:
Construct bridge, roadway, building and electrical system.

Original Contract Time:	Time Adj. This Change:	Previously Approved CCO Time Adjustments:	Percentage Time Adjusted: (including this change)	Total # of Unreconciled Deferred Time CCO(s): (including this change)
810 Day(s)	0 Day(s)	184 Day(s)	23 %	13

THIS CHANGE ORDER PROVIDES FOR:
Additional funds for CCO No. 85 for Bridge No. 34-0006L.

This change is necessary to pay for work ordered on westbound structure, Bridge No. 34-0006L. CCO 85 Supplement 1 eliminated this work from the eastbound structure, Bridge No. 34-0006R. In order to provide a uniform surface on the exterior girders, CCO 85 Supplement 0 added a bulkhead to be able to pour to the top of the exterior face of the girder (vertical joint), which eliminated the cold joint (horizontal joint) that would have been visible in a conventional pour.

This work will be paid as Extra Work at Force Account for $20,000.00, which can be financed from the contingency fund.

Design and Maintenance concurrence is not necessary since this change since this CCO is for administrative purposes only.

CONCURRED BY:

Construction Engineer:	Ben Ghafghazi	Date 12/8/09
Bridge Engineer:	Mehran Ardakanian	Date 12/8/09
Project Engineer:		Date
Project Manager:		Date
FHWA Rep.:		Date
Environmental:		Date
Other (specify):		Date
Other (specify):		Date
District Prior Approval By:		Date
HQ (Issue Approve) By:		Date
Resident Engineer's Signature:		Date

ESTIMATE OF COST

	THIS REQUEST	TOTAL TO DATE
ITEMS	$0.00	$0.00
FORCE ACCOUNT	$20,000.00	$100,000.00
AGREED PRICE	$0.00	$0.00
ADJUSTMENT	$0.00	$0.00
TOTAL	$20,000.00	$100,000.00

FEDERAL PARTICIPATION

☐ PARTICIPATING ☐ PARTICIPATING IN PART ☑ NONE
☐ NON-PARTICIPATING (MAINTENANCE) ☐ NON-PARTICIPATING

FEDERAL SEGREGATION (if more than one Funding Source or P.I.P. type)
☑ CCO FUNDED PER CONTRACT ☐ CCO FUNDED AS FOLLOWS

FEDERAL FUNDING SOURCE	PERCENT

ADA Notice: For individuals with sensory disabilities, this document is available in alternate formats. For information call: (916) 654-6410 or TDD (916) 654-3880 or write Records and Forms Management, 1120 N Street, MS-89, Sacramento, CA 95814.

CONTRACT CHANGE ORDER

Change Requested by:

CCO 85	Suppl. No. 3	Contract No. 04 - 0120L4	Road ALA-80-1.6/2.7	FED. AID LOC.: NO FED AID

M C M CONSTRUCTION INC

You are directed to make the following changes from the plans and specifications or do the following described work not included in the plans and specifications for this contract. ***NOTE: This change order is not effective until approved by the Engineer.***

Description of work to be done, estimate of quantities and prices to be paid. (Segregate between additional work at contract price, agreed price and force account.) Unless otherwise stated, rates for rental of equipment cover only such time as equipment is actually used and no allowance will be made for idle time. This last percentage shown is the net accumulated increase or decrease from the original quantity in the Engineer's Estimate.

Provide additional funds for CCO No. 85 for Bridge No. 34-0006L. Work is as described below.

Extra Work at Force Account:

Revise the exterior girder edge of deck Construction Joint for the Westbound Oakland Touchdown Superstructure by adding a bulkhead to be able to pour to the top of the exterior face of the girder (vertical joint). Detail is per Sheet 2 of 2 of CCO #85. All work shall be in accordance with Section 10-1.53, "Concrete Structures," of the Special Provisions.

Estimated cost of Extra Work at Force Account $20,000.00

Estimated Cost: **Increase** ☑ **Decrease** ☐ **$20,000.00**

By reason of this order the time of completion will be adjusted as follows: 0 days

Signature	**Resident Engineer** BEN GHAFGHAZI	**Date** 12/8/09
Signature	**Construction Engineer** Ben Ghafghazi	**Date** 12/8/09
Signature	**Construction Manager** Amer Bata	**Date** 12/22/09

We the undersigned contractor, have given careful consideration to the change proposed and agree, if this proposal is approved, that we will provide all equipment, furnish the materials, except as may otherwise be noted above, and perform all services necessary for the work above specified, and will accept as full payment therefor the prices shown above.

NOTE: If you, the contractor, do not sign acceptance of this order, your attention is directed to the requirements of the specifications as to proceeding with the ordered work and filing a written protest within the time therein specified.

Signature N/A	**(Print name and title)**	**Date**

STATE OF CALIFORNIA - DEPARTMENT OF TRANSPORTATION

CONTRACT CHANGE ORDER MEMORANDUM

DATE: 4/6/2010 Page 1 of 1

TO: AMER BATA / BEN GHAFGHAZI

FROM: BEN GHAFGHAZI

FILE: **E.A.** 04 - 0120L4
CO-RTE-PM ALA-80-1.6/2.7
FED. NO. NO FED AID

CCO#: **85** SUPPLEMENT#: **4** Category Code: **AFZZ**

CONTINGENCY BALANCE (incl. this change) **$2,146,116.40**

COST: **$0.00** INCREASE ☐ DECREASE ☐

HEADQUARTERS APPROVAL REQUIRED? ☐ YES ☑ NO

SUPPLEMENTAL FUNDS PROVIDED: **$0.00**

IS THIS REQUEST IN ACCORDANCE WITH ENVIRONMENTAL DOCUMENTS? ☑ YES ☐ NO

CCO DESCRIPTION:
Time Adjustment of 0 Days

PROJECT DESCRIPTION:
Construct bridge, roadway, building and electrical system.

Original Contract Time:	Time Adj. This Change:	Previously Approved CCO Time Adjustments:	Percentage Time Adjusted: (including this change)	Total # of Unreconciled Deferred Time CCO(s): (including this change)
810 Day(s)	0 Day(s)	184 Day(s)	23 %	16

THIS CHANGE ORDER PROVIDES FOR:
A time adjustment of 0 (zero) working days, in accordance with Section 8-1.07, "Liquidated Damages", of the Standard Specifications.

It has been determined that the work of Contract Change Orders No. 85 and 85 Supplement #1 has had no impact on the contractor's controlling operation. Therefore, a time extension of 0 days is recommended.

Total Time Adjustment = 0 Days

CONCURRED BY:

Construction Engineer:	Ben Ghafghazi	Date 4/7/2010
Bridge Engineer:		Date
Project Engineer:		Date
Project Manager:		Date
FHWA Rep.:		Date
Environmental:		Date
Other (specify):		Date
Other (specify):		Date
District Prior Approval By:		Date
HQ (Issue Approve) By:		Date
Resident Engineer's Signature:		Date 4/7/2010

ESTIMATE OF COST

	THIS REQUEST	TOTAL TO DATE
ITEMS	$0.00	$0.00
FORCE ACCOUNT	$0.00	$100,000.00
AGREED PRICE	$0.00	$0.00
ADJUSTMENT	$0.00	$0.00
TOTAL	$0.00	$100,000.00

FEDERAL PARTICIPATION

☐ PARTICIPATING ☐ PARTICIPATING IN PART ☑ NONE
☐ NON-PARTICIPATING (MAINTENANCE) ☐ NON-PARTICIPATING

FEDERAL SEGREGATION (If more than one Funding Source or P.I.P. type)
☑ CCO FUNDED PER CONTRACT ☐ CCO FUNDED AS FOLLOWS

FEDERAL FUNDING SOURCE	PERCENT

ADA Notice: For individuals with sensory disabilities, this document is available in alternate formats. For information call: (916) 654-6410 or TDD (916) 654-3880 or write Records and Forms Management, 1120 N Street, MS-89, Sacramento, CA 95814.

STATE OF CALIFORNIA - DEPARTMENT OF TRANSPORTATION

CONTRACT CHANGE ORDER

Change Requested by: Engineer

CCO: 85	Suppl. No. 4	Contract No. 04 - 0120L4	Road ALA-80-1.6/2.7	FED. AID LOC.: NO FED AID

To: **M C M CONSTRUCTION INC**

You are directed to make the following changes from the plans and specifications or do the following described work not included in the plans and specifications for this contract. ***NOTE: This change order is not effective until approved by the Engineer.***

Description of work to be done, estimate of quantities and prices to be paid. (Segregate between additional work at contract price, agreed price and force account.) Unless otherwise stated, rates for rental of equipment cover only such time as equipment is actually used and no allowance will be made for idle time. This last percentage shown is the net accumulated increase or decrease from the original quantity in the Engineer's Estimate.

TIME ADJUSTMENT:

A determination of the delay in completion of the contract due to the work specified by Contract Change Orders No. 85 and 85 Supplement #1 have been made in accordance with the provisions of Section 8-1.07 of the Standard Specifications.

Time Adjustment = 0 Days

Acceptance of this change order constitutes an agreement of full resolution of all time impact costs resulting from Change Orders No. 85 and 85 Supplement #1.

This change order acts to resolve the deferred time issued on Change Orders No. 85 and 85 Supplement #1, and no additional time shall be granted.

Estimated Cost: **Increase** ☐ **Decrease** ☐ **$0.00**

By reason of this order the time of completion will be adjusted as follows: 0 days

Signature	**Resident Engineer** Ben Ghafghazi	**Date** 4/7/2010
Signature	**Construction Engineer** Ben Ghafghazi	**Date** 4/7/2010
Signature	**Construction Manager** Amer Bata	**Date** 7/10/4 ?

We the undersigned contractor, have given careful consideration to the change proposed and agree, if this proposal is approved, that we will provide all equipment, furnish the materials, except as may otherwise be noted above, and perform all services necessary for the work above specified, and will accept as full payment therefor the prices shown above.

NOTE: If you, the contractor, do not sign acceptance of this order, your attention is directed to the requirements of the specifications as to proceeding with the ordered work and filing a written protest within the time therein specified.

Contractor Accepts by

Signature	**(Print name and title)** JAMES A. CARTER, PRESIDENT	**Date** 7/14/10

STATE OF CALIFORNIA - DEPARTMENT OF TRANSPORTATION

CONTRACT CHANGE ORDER

Change Requested by: Engineer

CCO: 86	Suppl. No. 0	Contract No. 04 - 0120L4	Road ALA-80-1.6/2.7	FED. AID LOC.: NO FED AID

M C M CONSTRUCTION INC

You are directed to make the following changes from the plans and specifications or do the following described work not included in the plans and specifications for this contract. ***NOTE: This change order is not effective until approved by the Engineer.***

Description of work to be done, estimate of quantities and prices to be paid. (Segregate between additional work at contract price, agreed price and force account.) Unless otherwise stated, rates for rental of equipment cover only such time as equipment is actually used and no allowance will be made for idle time. This last percentage shown is the net accumulated increase or decrease from the original quantity in the Engineer's Estimate.

Revise bar reinforcing steel and post tensioning duct layout at Frames 1 and 2 of Westbound Superstructure Bridge No. 34-0006L.

Estimate of Increase in Contract Item at Contract Price:

Item No. 103: STRUCTURAL CONCRETE BRIDGE LOCATION B
34 M3 (+0.26%) $2,465.00 /M3 = +$83,810.00 (+0.69%)

Revised concrete quantity due to the revsions of this CCO.

Total cost for Increase in Contract Item.....$83,810.00

The quantity shown herein for Item No. 103,"Structural Concrete, Bridge, Location B (Bay)," when combined with the quantities specified in the Engineer's Estimate, and as modified by any previous change orders, shall be the final quantity for which payment will be made.

Extra Work at Force Account:

Provide labor, equipment, and material necessary to modify previously placed reinforcing to accommodate the revisions of this CCO.

Estimated cost of Extra Work at Force Account $20,000.00

Adjustment of Compensation at Lump Sum:

Revise the bar reinforcing steel and post tensioning duct layout at Frames 1 and 2 of Bridge No. 34-0006L superstructure as shown on sheets 3 of 35 through 35 of 35 of this CCO.

Provide professional design services to produce ISDs for CCO plans.

For this work, the contractor will be paid the sum of $138,386.49. This sum constitutes full compensation, including markups, for this change.

Adjustment of Compensation at Agreed Lump Sum $138,386.49

All work for this CCO shall be in accordance with Sections 5-1.15, "Integrated Shop Drawings," 10-1.52, "Prestressing Concrete," and 10-1.67, "Reinforcement," of the Special Provisions.

CONTRACT CHANGE ORDER

Change Requested by: Engineer

CCO 86	Suppl. No. 0	Contract No. 04 - 0120L4	Road ALA-80-1.6/2.7	FED. AID LOC.: NO FED AID

Estimated Cost: **Increase** ☑ **Decrease** ☐ **$242,196.49**

By reason of this order the time of completion will be adjusted as follows: 0 days

Submitted by

Signature	Resident Engineer BEN GHAFGHAZI	Date 6/17/09

Approval Recommended by

Signature	Construction Manager for Amer Bata / Mehran Ardekanian	Date 7/15/09

Engineer Approval by

Signature	Construction Manager for Amer Bata / Mehran Ardekanian	Date 7/15/09

We the undersigned contractor, have given careful consideration to the change proposed and agree, if this proposal is approved, that we will provide all equipment, furnish the materials, except as may otherwise be noted above, and perform all services necessary for the work above specified, and will accept as full payment therefor the prices shown above.

NOTE: If you, the contractor, do not sign acceptance of this order, your attention is directed to the requirements of the specifications as to proceeding with the ordered work and filing a written protest within the time therein specified.

Contractor Acceptance by

Signature	(Print name and title) EDMUNDO A. PUCHI, TREASURER	Date 7/9/09

DIST	COUNTY	ROUTE	KILOMETER POST TOTAL PROJECT	SHEET NO.	TOTAL SHEETS
04	Ala	80	1.6/2.7	174R1	643

Adam Wang
REGISTERED ENGINEER - CIVIL

1-29-07
PLANS APPROVAL DATE

REGISTERED PROFESSIONAL ENGINEER ADAM TH WANG No. 40402 Exp. 3-31-2007 CIVIL STATE OF CALIFORNIA

The State of California or its officers or agents shall not be responsible for the accuracy or completeness of electronic copies of this plan sheet.

T.Y. LIN / MOFFATT & NICHOL
TWO HARRISON STREET, SUITE 500
SAN FRANCISCO, CA 94105

W. KOO & ASSOCIATES, INC
625 THE CITY DRIVE SOUTH, SUITE 200
ORANGE, CA 92868

To get to the Caltrans web site, go to: http://www.dot.ca.gov

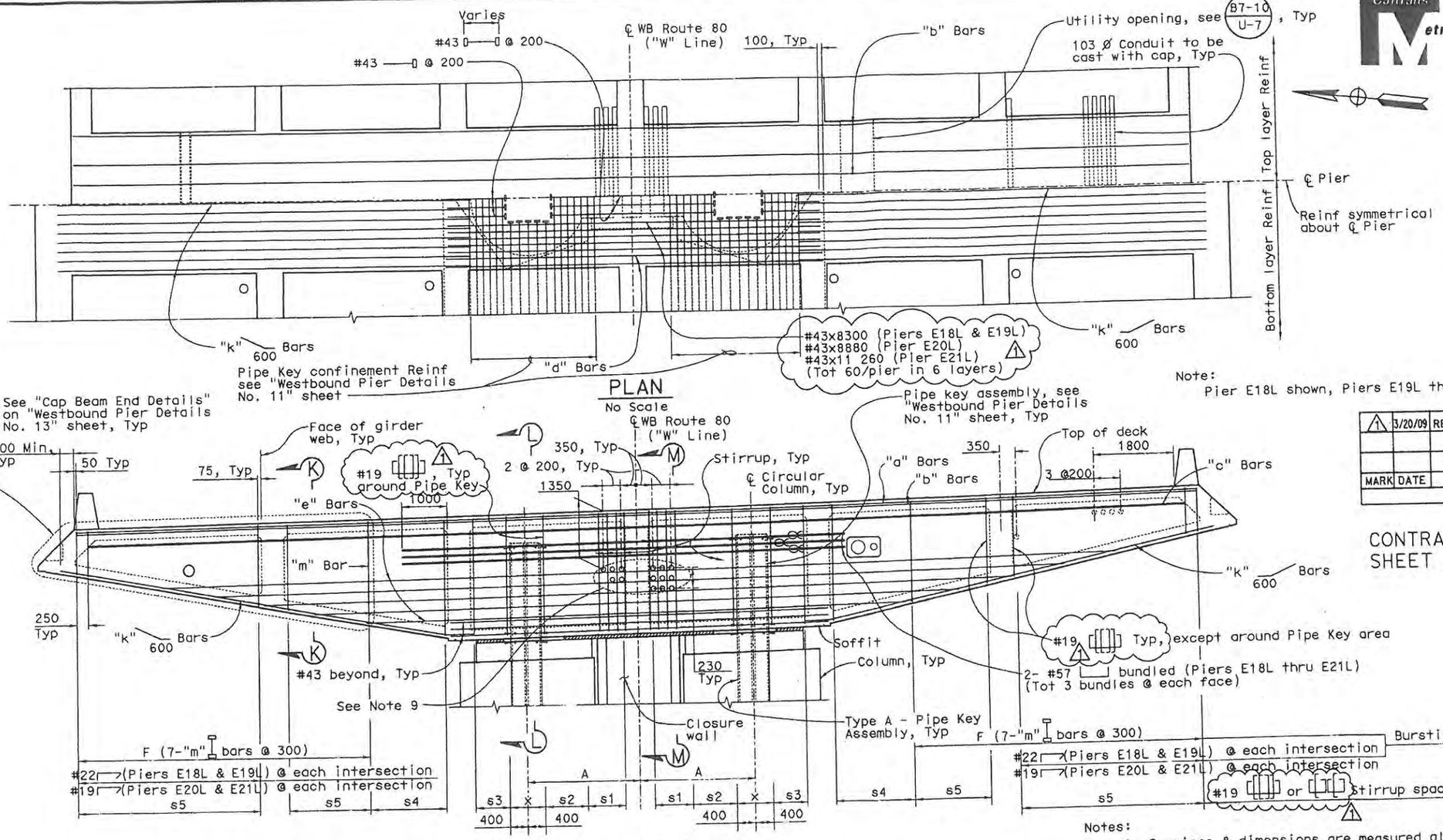

Note:
Pier E18L shown, Piers E19L thru E21L similar

ELEVATION
No Scale

PIER CAP BEAM - PIERS E18L THRU E21L

MARK	DATE	DESCRIPTIONS	BY	CH'D	CCO#
1	3/20/09	REVISED PIER REBARS	VT	JSK	
		REVISIONS			

CONTRACT CHANGE ORDER NO. 86
SHEET 5 OF 35 6/11/09

REGISTERED PROFESSIONAL ENGINEER VINH DIEU TRINH No. 50685 Exp. 9-30-2009 CIVIL STATE OF CALIFORNIA

STAMP IS VALID FOR REVISION 1 ONLY

STIRRUP SPACING TABLE

Locations	A	s1	s2	s3	s4	s5	x
Pier E18L	2331	5@250 Max	6@150	8-2 bundled @150	9@150	@300 Max	8@100
Pier E19L	2331	5@250 Max	6@150	8-2 bundled @150	9@150	@300 Max	8@100
Pier E20L	2570	6@250 Max	6@150	8-2 bundled @150	9@150	@300 Max	8@100
Pier E21L	3761	8@150 Max	8@150	8-2 bundled @150	9@150	@300 Max	8@100

1

LEGEND
- Denotes headed bar (both ends)
- Denotes headed bar
- Denotes bundled bars

Notes:
1. Spacings & dimensions are measured along ℄ Pier.
2. For other information not shown, see "Pier Elevation" sheets.
3. For Sections "K-K", "L-L" & "M-M", see "Westbound Pier Details No. 7" sheet.
4. For Prestressing Path Layout, see "Westbound Pier Details No. 10" sheet.
5. Move stirrup to clear reinforcement, conduit & prestressing ducts @ each girder & around Pipe Key area.
6. For additional reinf around Pipe Key Assembly, see "Westbound Pier Details No. 11" sheet.
7. For reinforcement designations and dimensions, see "Pier Cap Beam Schedule" on "Westbound Pier Details No. 7" sheet.
8. For Utility info, see "WB Typical Section No. 1" sheet and "Electrical or Mechanical Plans".
9. Conduit layout shown for Pier E18L & E19L. Layout for Pier E20L & E21L similar to Layout @ Hinge FW.
10. For Bursting Reinf Layout, see "Westbound Pier Details No. 13" sheet.

ALL DIMENSIONS ARE IN MILLIMETERS UNLESS OTHERWISE SHOWN

SAN FRANCISCO OAKLAND BAY BRIDGE
EAST SPAN SEISMIC SAFETY PROJECT

OAKLAND APPROACH STRUCTURES-PHASE 1

WESTBOUND PIER DETAILS NO. 6

DESIGN OVERSIGHT
SAM AKKAD FRANCISCO CARPIO BERNARD CHAN HASAN EL-NATUR
SIGN OFF DATE 4/3/2009
Rev. Date: 5-18-98

	BY	CHECKED
DESIGN	K. Russell	A. Moubayed
DETAILS	A. Segura	A. Moubayed
QUANTITIES	K. Russell	H. Haraun

PREPARED FOR THE STATE OF CALIFORNIA DEPARTMENT OF TRANSPORTATION

ORIGINAL SCALE IN MILLIMETERS FOR REDUCED PLANS 0 10 20 30 40 50 60 70 80 90 100

Adam Wang
PROJECT ENGINEER

CU 04
EA 0120L1

BRIDGE NO. 34-0006L/R
KILOMETER POST 1.6

DISREGARD PRINTS BEARING EARLIER REVISION DATES

REVISION DATES (PRELIMINARY STAGE ONLY) 5/28/03 10/30/03 8/20/04 10/22/04 2/28/05 5/24/05 11/14/05 1/24/06 4/14/06 7/28/06

SHEET 61R1 OF 224

DIST	COUNTY	ROUTE	KILOMETER POST TOTAL PROJECT	SHEET NO.	TOTAL SHEETS
04	Ala	80	1.6/2.7	175R1	643

Caltrans Metric

Adam Wang
REGISTERED ENGINEER - CIVIL
1-29-07
PLANS APPROVAL DATE

REGISTERED PROFESSIONAL ENGINEER ADAM TN WANG No. 40402 Exp. 3-31-2007 CIVIL STATE OF CALIFORNIA

The State of California or its officers or agents shall not be responsible for the accuracy or completeness of electronic copies of this plan sheet.

T.Y. LIN / MOFFATT & NICHOL
TWO HARRISON STREET, SUITE 500
SAN FRANCISCO, CA 94105

W. KOO & ASSOCIATES, INC
625 THE CITY DRIVE SOUTH, SUITE 200
ORANGE, CA 92868

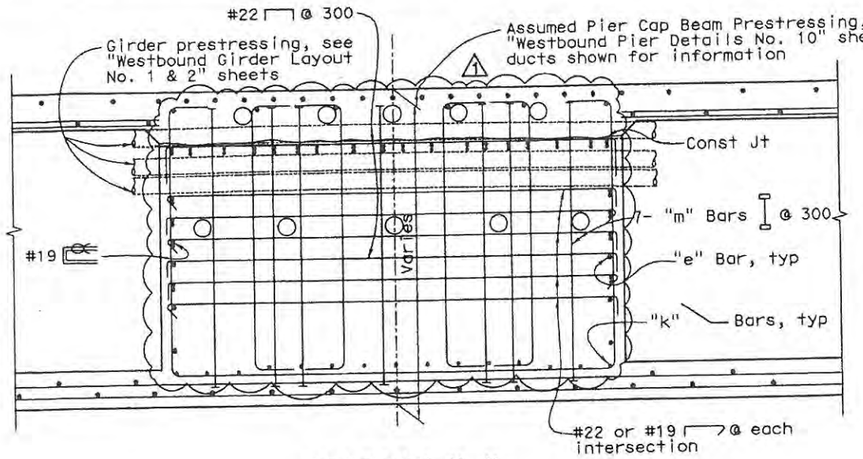

SECTION K-K
1:20

Notes:
1. For top of deck control, see "Westbound Deck Contours No. 1 & 2" sheets.
2. For soffit control, see "Westbound Girder Layout No. 1 & 3" & "Westbound Typical Section No. 1 & No. 2" sheets.
3. Reinforcement shall be placed as shown at corners of hooks & intersections. Remaining reinf of each type or group shall be placed equally or evenly within the limit of each group. Move the reinf to clear the prestressing ducts as necessary.
4. For additional reinf around Pipe Key Assembly, see "Westbound Pier Details No. 6 & No. 11" sheets.

LEGEND
- Denotes headed bar (both ends)
- Denotes headed bar
- Denotes bundled bars

Note:
For info not shown see "Section M-M"

CONTRACT CHANGE ORDER NO. 86
SHEET 6 OF 35 6/11/09

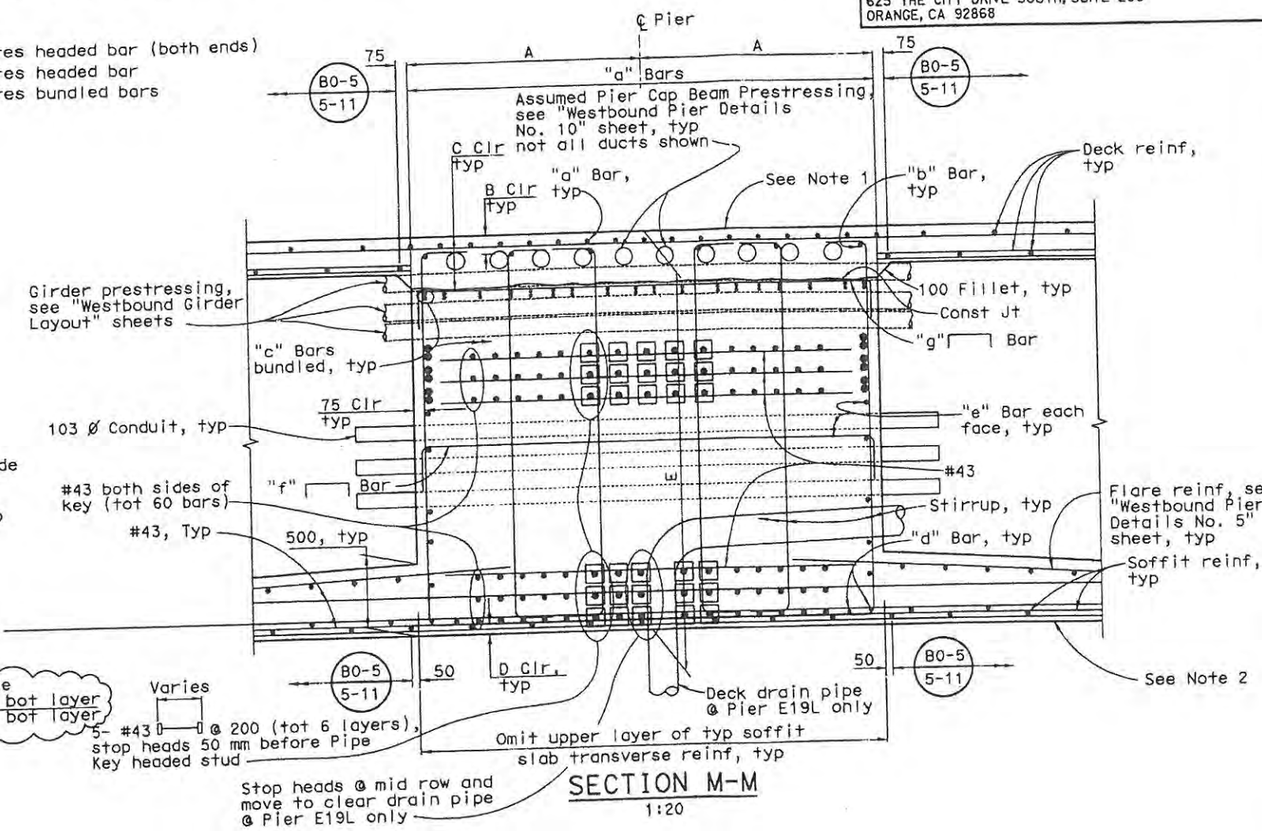

SECTION M-M
1:20

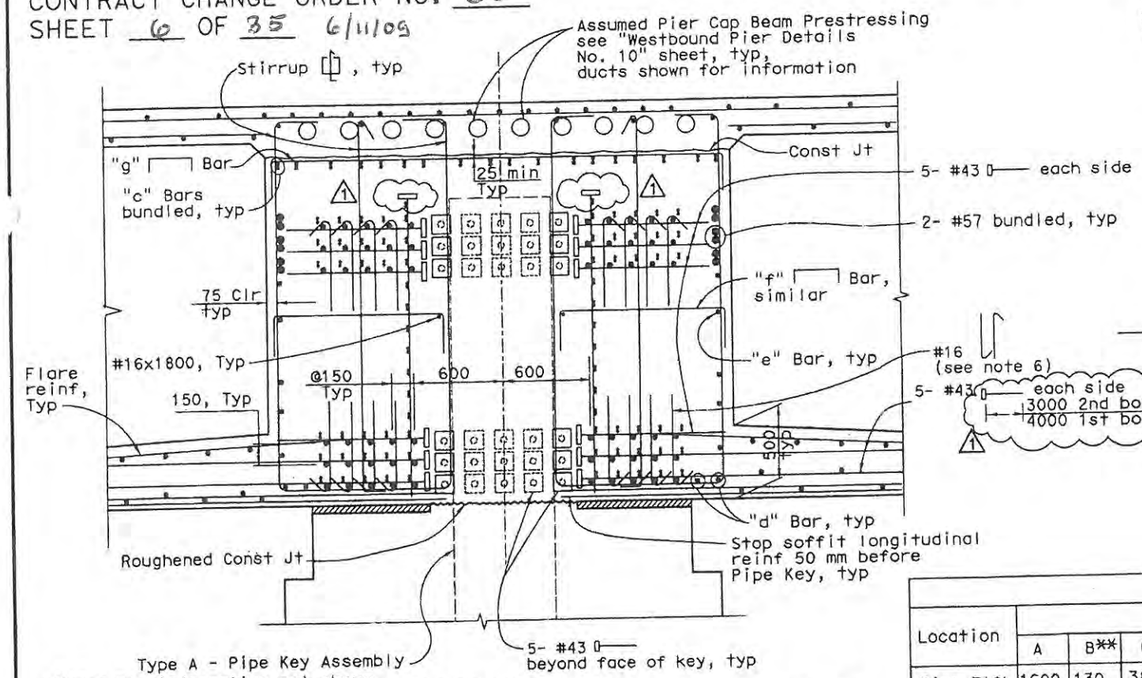

Note: For information not shown, see "Section M-M"

SECTION L-L
1:20

PIER CAP BEAM SCHEDULE

Location	DIMENSIONS						REINFORCEMENT DESIGNATIONS								
	A	B**	C**	D**	E	F	"a" bars	"b" bars	"c" bars	"d" bars	"e" bars*	"f" bars	"g" bars	"k" bars	"m" bars
Pier E18L	1600	130	380	120 min & 200 max clr	2753	6700	17-#19@200	6-#29	2-#29 Bundled (tot 18 bundles)	4-#29	5-#29	#19@300 max	#22@300	15-#29	7-#29
Pier E19L	1600	130	380	120 min & 200 max clr	2603	6700	17-#19@200	6-#29	2-#29 Bundled (tot 18 bundles)	4-#29	5-#29	#19@300 max	#22@300	15-#29	7-#29
Pier E20L	1600	130	380	120 min & 200 max clr	2459	6700	17-#19@200	6-#36	2-#36 Bundled (tot 12 bundles)	4-#29	5-#36	#19@300 max	#22@300	15-#29	7-#25
Pier E21L	1600	130	380	120 min & 200 max clr	2256	6700	17-#19@200	6-#36	2-#36 Bundled (tot 12 bundles)	4-#29	4-#36	#19@300 max	#22@300	15-#29	7-#25

* Cut to clear Prestressing duct where interferes
** Clearance to main reinf.

ALL DIMENSIONS ARE IN MILLIMETERS UNLESS OTHERWISE SHOWN

MARK	DATE	DESCRIPTIONS	BY	CH'D	CCO#
1	3/20/09	REVISED PIER REBARS & PT DUCTS	VT	JSK	

REVISIONS

STAMP IS VALID FOR REVISION 1 ONLY

REGISTERED PROFESSIONAL ENGINEER VINH DIEU TRINH No. 50685 Exp. 9-30-2009 CIVIL STATE OF CALIFORNIA

DESIGN OVERSIGHT
SAM AKKAD FRANCISCO CARPIO BERNARD CHAN HASAN EL-NATUR
SIGN OFF DATE 4/3/2009
Rev. Date: 5-18-98

DESIGN	BY K. Russell	CHECKED A. Moubayed	
DETAILS	BY A. Segura	CHECKED A. Moubayed	
QUANTITIES	BY O. Jaradat	CHECKED H. Haroun	

PREPARED FOR THE STATE OF CALIFORNIA DEPARTMENT OF TRANSPORTATION

ORIGINAL SCALE IN MILLIMETERS FOR REDUCED PLANS 0 10 20 30 40 50 60 70 80 90 100

Adam Wang
PROJECT ENGINEER

CU 04
EA 0120L1

BRIDGE NO. 34-0006L/R
KILOMETER POST 1.6

DISREGARD PRINTS BEARING EARLIER REVISION DATES

REVISION DATES (PRELIMINARY STAGE ONLY) 5/18/03 10/30/03 8/20/04 10/27/04 2/18/05 5/27/05 11/14/05 1/13/06 1/13/06 7/28/06

SHEET 62R1 OF 224

SAN FRANCISCO OAKLAND BAY BRIDGE
EAST SPAN SEISMIC SAFETY PROJECT

OAKLAND APPROACH STRUCTURES-PHASE 1

WESTBOUND PIER DETAILS NO. 7

DIST	COUNTY	ROUTE	KILOMETER POST TOTAL PROJECT	SHEET NO.	TOTAL SHEETS
04	Ala	80	1.6/2.7	176R1	643

Caltrans Metric

Adam Wang
REGISTERED ENGINEER - CIVIL
1-29-07
PLANS APPROVAL DATE

REGISTERED PROFESSIONAL ENGINEER ADAM TH WANG No. 40402 Exp. 3-31-2007 CIVIL STATE OF CALIFORNIA

The State of California or its officers or agents shall not be responsible for the accuracy or completeness of electronic copies of this plan sheet.

T.Y. LIN / MOFFATT & NICHOL
TWO HARRISON STREET, SUITE 500
SAN FRANCISCO, CA 94105

W. KOO & ASSOCIATES, INC
625 THE CITY DRIVE SOUTH, SUITE 200
ORANGE, CA 92868

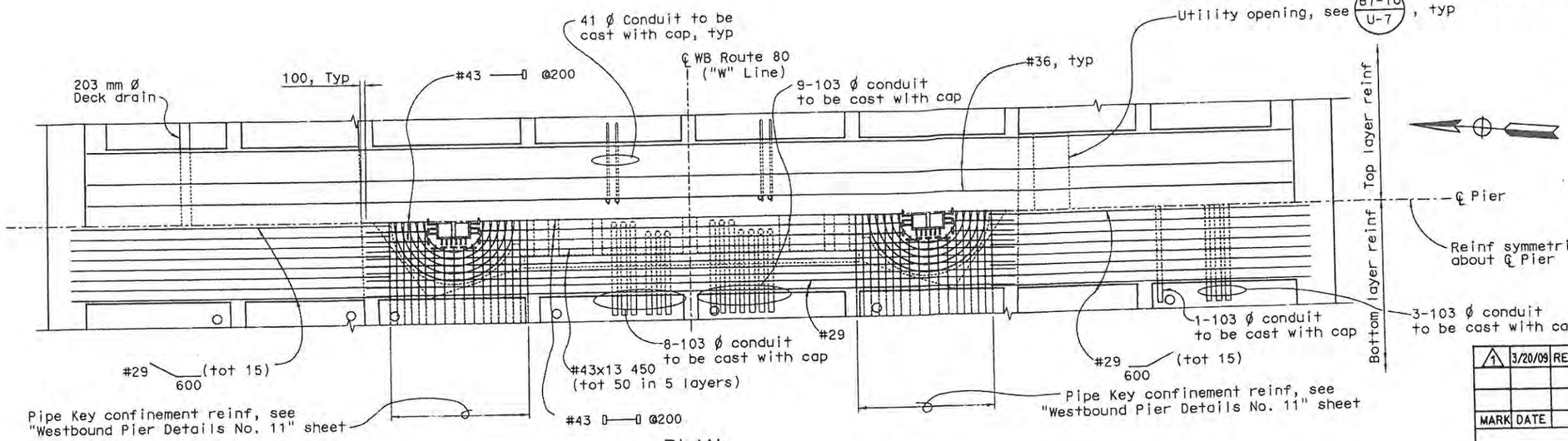

PLAN
1:50

MARK	DATE	DESCRIPTIONS	BY	CH'D	CCO#
1	3/20/09	REVISED PIER REBARS	VT	JSK	
		REVISIONS			

CONTRACT CHANGE ORDER NO. 86
SHEET 7 OF 35 6/11/09

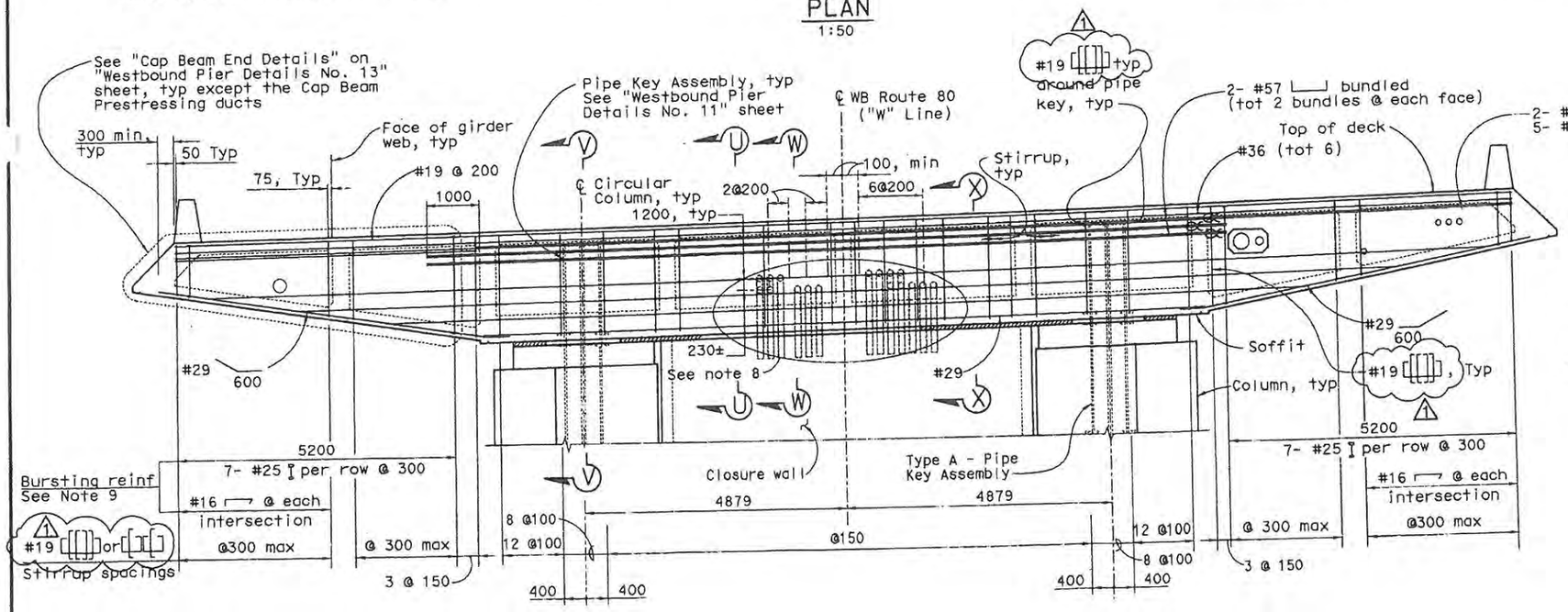

ELEVATION
1:50

PIER CAP BEAM - PIER E22L

LEGEND

- Denotes headed bar (both ends)
- Denotes headed bar
- Denotes bundled bars

REGISTERED PROFESSIONAL ENGINEER VINH DIEU TRINH No. 50685 Exp. 9-30-2009 CIVIL STATE OF CALIFORNIA

STAMP IS VALID FOR REVISION 1 ONLY

Notes:

1. Spacings & dimensions are measured along ℄ Pier.
2. For other information not shown, see " Pier Elevation" sheets.
3. For Sections "U-U", "V-V", "W-W" & "X-X", see "Westbound Pier Details No. 9" sheet.
4. For Pestressing Path Layout, see "Westbound Pier Details No. 10" sheet.
5. Move stirrup to clear reinforcement, conduits, pipe & prestressing ducts @ each girder & around Pipe Key area.
6. For additional reinf around Pipe Key Assembly, see "Westbound Pier Details No. 11" sheet.
7. Cut the reinf to clean conduits and pipes under Engineer's direction only.
8. For utility info, see "WB Typical Section No. 1" sheet and "Electrical or Mechanical Plans".
9. For Bursting Reinf Layout, see "Westbound Pier Details No. 13" sheet.

Note:
The Contractor shall verify all controlling field dimensions before ordering or fabricating any material

ALL DIMENSIONS ARE IN MILLIMETERS UNLESS OTHERWISE SHOWN

SAN FRANCISCO OAKLAND BAY BRIDGE
EAST SPAN SEISMIC SAFETY PROJECT

OAKLAND APPROACH STRUCTURES-PHASE 1

WESTBOUND PIER DETAILS NO. 8

DESIGN OVERSIGHT
SAM AKKAD FRANCISCO CARPIO BERNARD CHAN HASAN EL-NATUR
SIGN OFF DATE 4/3/2009
Rev. Date: 5-18-98

DESIGN	BY K. Russell	CHECKED A. Moubayed	
DETAILS	BY A. Segura	CHECKED A. Moubayed	
QUANTITIES	BY O. Jaradat	CHECKED H. Haroun	

PREPARED FOR THE STATE OF CALIFORNIA DEPARTMENT OF TRANSPORTATION

Adam Wang
PROJECT ENGINEER

CU 04
EA 0120L1

BRIDGE NO. 34-0006L/R
KILOMETER POST 1.6

DISREGARD PRINTS BEARING EARLIER REVISION DATES

REVISION DATES (PRELIMINARY STAGE ONLY) 5/18/05 10/14/05 8/30/06 10/25/06 2/13/06 5/26/06 11/21/06 1/31/06 1/13/06 7/28/06

SHEET 63R1 OF 224

ORIGINAL SCALE IN MILLIMETERS FOR REDUCED PLANS 0 10 20 30 40 50 60 70 80 90 100

ISSUE AS REQUEST

TIME PLOTTED: 13:47:15 PLOT DATE: 2/13/2009 FILE NAME: C:\PLOTTER\

DIST	COUNTY	ROUTE	KILOMETER POST TOTAL PROJECT	SHEET NO.	TOTAL SHEETS
04	Ala	80	1.6/2.7	177R1	643

Caltrans Metric

Adam Wang
REGISTERED ENGINEER/- CIVIL
1-29-07
PLANS APPROVAL DATE

REGISTERED PROFESSIONAL ENGINEER — ADAM TN WANG No. 40402 Exp. 3-31-2007 CIVIL — STATE OF CALIFORNIA

The State of California or its officers or agents shall not be responsible for the accuracy or completeness of electronic copies of this plan sheet.

T.Y. LIN / MOFFATT & NICHOL
TWO HARRISON STREET, SUITE 500
SAN FRANCISCO, CA 94105

W. KOO & ASSOCIATES, INC
625 THE CITY DRIVE SOUTH, SUITE 200
ORANGE, CA 92868

Notes:
1. For top of deck control, see "Westbound Deck Contours No. 2" sheet.
2. For soffit control, see "Westbound Typical Section No. 2" & "Westbound Girder Layout No. 3" sheets.
3. Move reinf to clear the prestressing ducts, conduits & pipes as necessary.
4. For additional reinf around Pipe Key Assembly, see "Westbound Pier Details No. 8 & No. 11" sheets.
5. For Conduit info, see "Roadway Plans".

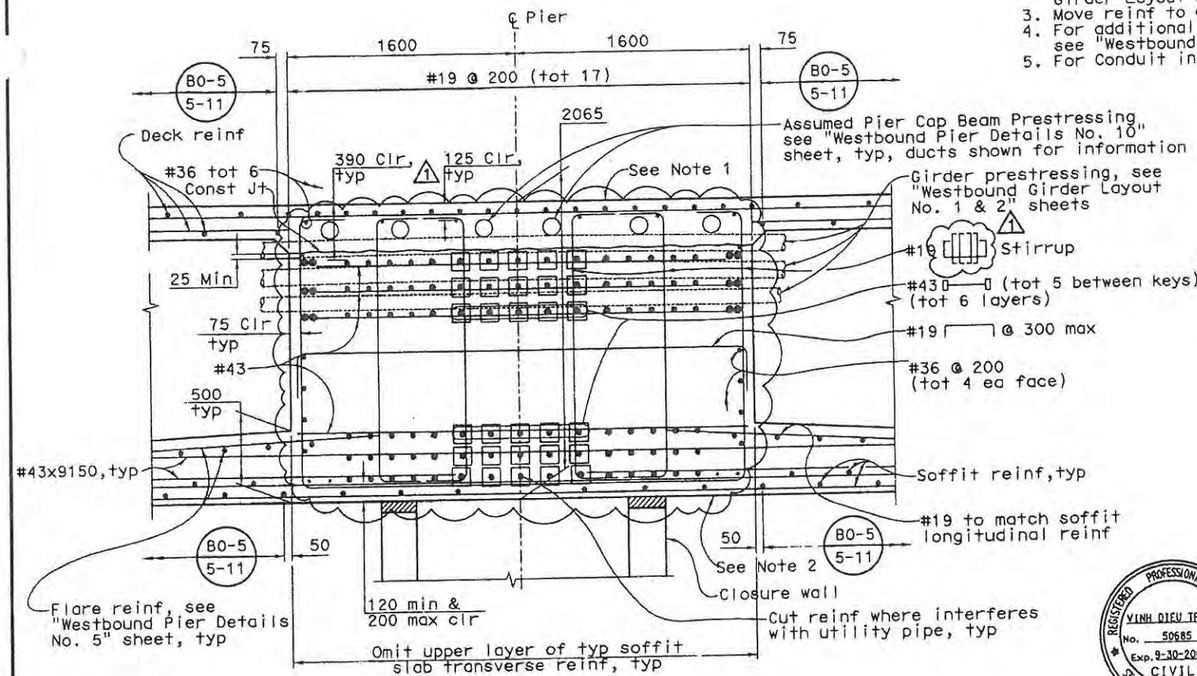

SECTION U-U
1:20

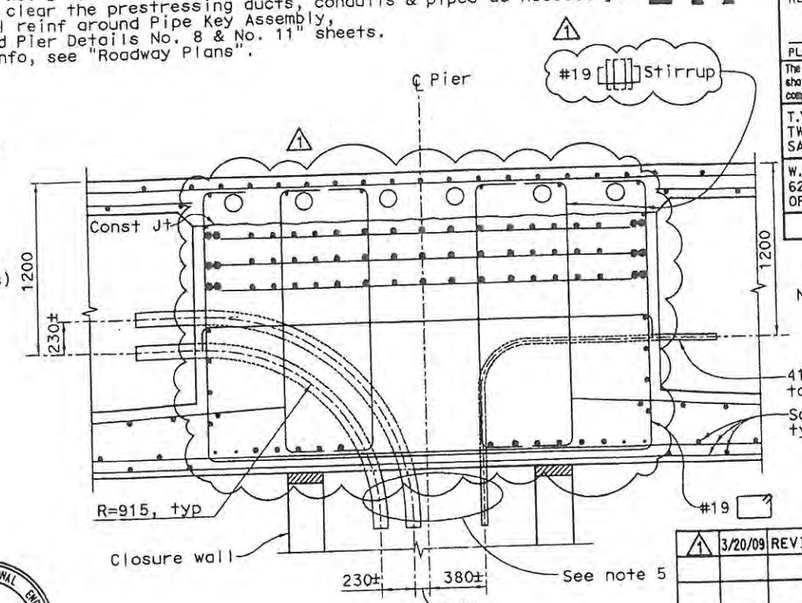

SECTION W-W
1:20

MARK	DATE	DESCRIPTIONS	BY	CH'D	CCO#
1	3/20/09	REVISED PIER REBARS	VT	JSK	

REVISIONS

CONTRACT CHANGE ORDER NO. 86
SHEET 8 OF 35 6/11/09

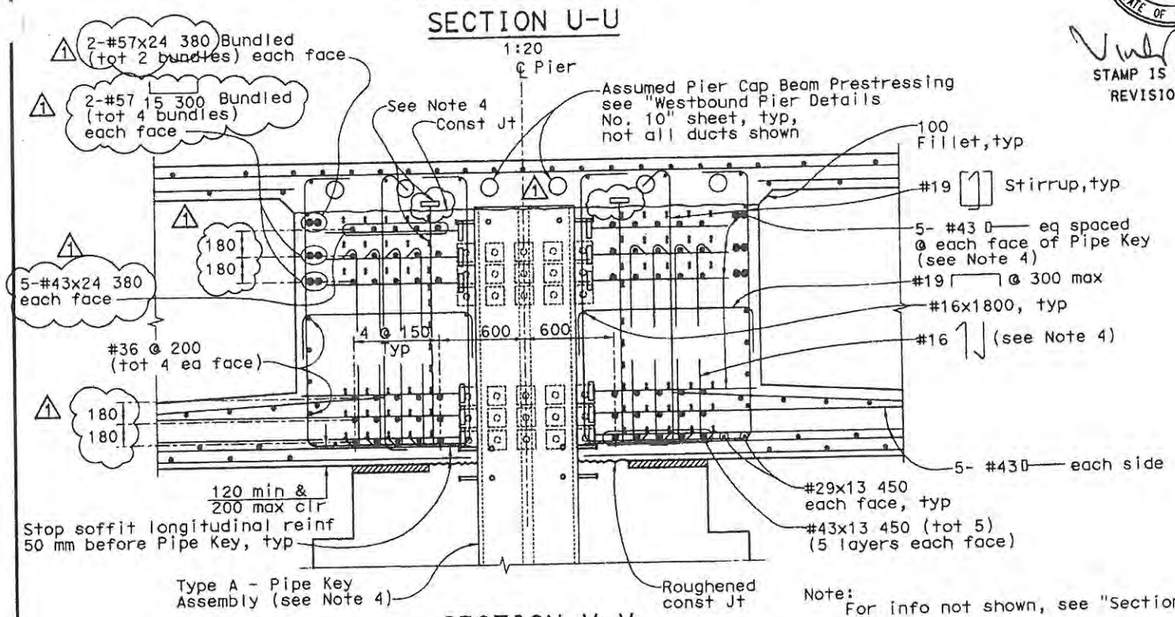

SECTION V-V
1:20

Note: For info not shown, see "Section U-U"

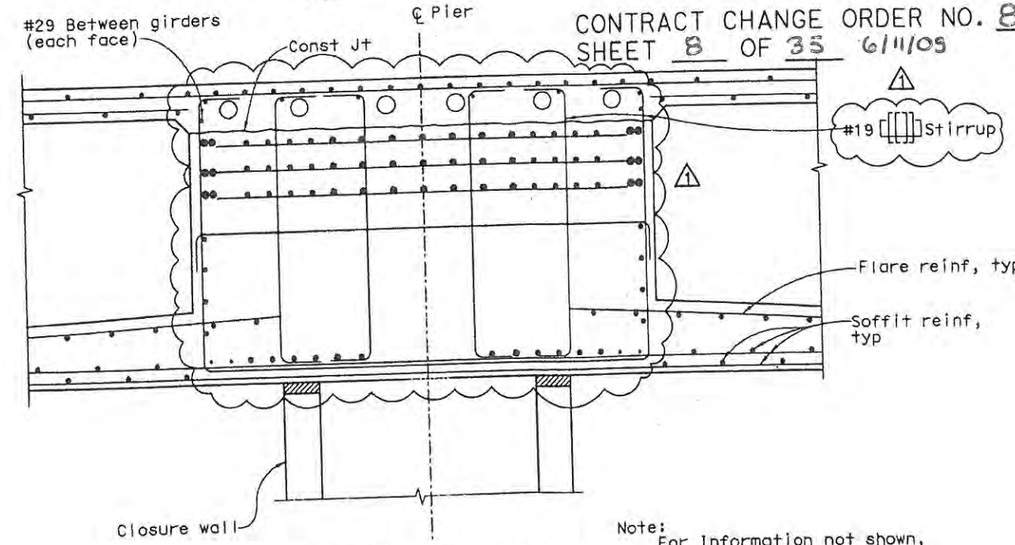

SECTION X-X
1:20

Note: For Information not shown, see "Section U-U & V-V"

REGISTERED PROFESSIONAL ENGINEER — VINH DIEU TRINH No. 50685 Exp. 9-30-2009 CIVIL — STATE OF CALIFORNIA

STAMP IS VALID FOR REVISION 1 ONLY

ALL DIMENSIONS ARE IN MILLIMETERS UNLESS OTHERWISE SHOWN

SAN FRANCISCO OAKLAND BAY BRIDGE
EAST SPAN SEISMIC SAFETY PROJECT

OAKLAND APPROACH STRUCTURES-PHASE 1

WESTBOUND PIER DETAILS NO. 9

DESIGN OVERSIGHT: SAM AKKAD, FRANCISCO CARPIO, BERNARD CHAN, HASAN EL-NATUR
SIGN OFF DATE: 4/3/2009
Rev. Date: 5-18-98

	BY	CHECKED	
DESIGN	K. Russell	A. Moubayed	
DETAILS	A. Segura	A. Moubayed	
QUANTITIES	O. Jaradat	H. Haroun	

PREPARED FOR THE STATE OF CALIFORNIA DEPARTMENT OF TRANSPORTATION

Adam Wang
PROJECT ENGINEER

BRIDGE NO. 34-0006L/R
KILOMETER POST 1.6

CU 04
EA 0120L1

DISREGARD PRINTS BEARING EARLIER REVISION DATES: 5/18/05, 10/24/03, 3/29/04, 10/29/04, 2/18/05, 5/24/05, 11/14/05, 1/31/06, 4/13/06, 1/23/06

SHEET 64R1 OF 224

ORIGINAL SCALE IN MILLIMETERS FOR REDUCED PLANS 0 10 20 30 40 50 60 70 80 90 100

DIST	COUNTY	ROUTE	KILOMETER POST TOTAL PROJECT	SHEET NO.	TOTAL SHEETS
04	Ala	80	1.6/2.7	178R2	643

Adam Wang
REGISTERED ENGINEER - CIVIL
1-29-07
PLANS APPROVAL DATE

REGISTERED PROFESSIONAL ENGINEER — ADAM TW WANG — No. 40402 — Exp. 3-31-2007 — CIVIL — STATE OF CALIFORNIA

The State of California or its officers or agents shall not be responsible for the accuracy or completeness of electronic copies of this plan sheet.

T.Y. LIN / MOFFATT & NICHOL
TWO HARRISON STREET, SUITE 500
SAN FRANCISCO, CA 94105

W. KOO & ASSOCIATES, INC
625 THE CITY DRIVE SOUTH, SUITE 200
ORANGE, CA 92868

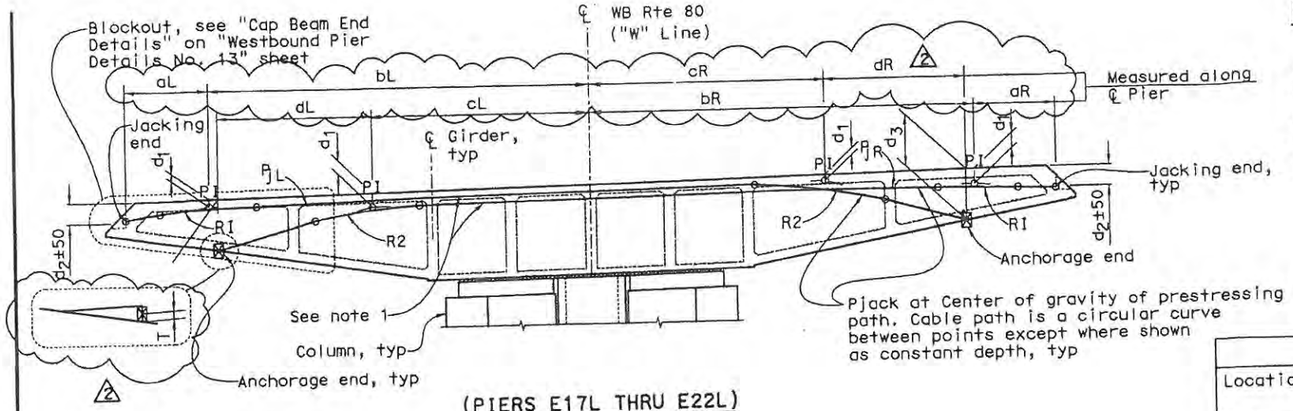

(PIERS E17L THRU E22L)

PIER CAP BEAM PRESTRESSING PATH LAYOUT

No Scale

PRESTRESS NOTES - PIER CAP BEAM

1860 MPa Low Relaxation Strand:
Pjack = See "Pier Cap Beam Prestress Table"
Anchor Set = 10 mm
Friction Curvature Coefficient μ = 0.15
Friction Wobble Coefficient k = 0.0007/m
Concrete: f'_c = 45 MPa @ 28 days (Pier E17L, E18L & E19L)
f'_c = 38 MPa @ 28 days (Pier E20L, E21L & E22L)
f'_{ci} = 43* MPa @ time of stressing (Piers E17L, E18L & E19L)
f'_{ci} = 35* MPa @ time of stressing (Piers E20L, E21L & E22L)
Contractor shall submit elongation calculations based on initial stress at ⊠ = "A" times jacking stress.
One end stressing shall be performed on jacking end from either end.

PIER CAP BEAM PRESTRESSING TABLE

Locations	Pjack (kN) LEFT	Pjack (kN) RIGHT	aL △2	bL	cL	dL	aR	bR	cR	dR	d_1	d_2	T △2	minR_1	minR_2	"A" Inital force coefficient
Pier E17L	32 930	32 930	2940	9775	5785	4465	2915	9800	5985	4265	260	550	280	20 700	12 100	0.919
Pier E18L	24 500	24 500	2745	9990	5900	4350	2745	9990	5900	4350	180	550	280	16 500	11 600	0.913
Pier E19L	25 150	25 150	2745	9990	6055	3945	2745	9990	6060	3940	180	550	270	16 500	12 800	0.874
Pier E20L	19 580	19 580	2668	10068	8290	2825	2650	10085	8915	2705	180	550	280	15 800	7 600	0.907
Pier E21L	16 690	16 690	2395	10390	9280	2175	2385	10400	9428	2028	180	550	250	10 600	5 800	0.898
Pier E22L	16 690	16 690	2160	10625	7203	3605	2170	10615	7166	3648	180	550	250	6 600	4 200	0.884

*f'ci can be reduced to 38 MPa (Piers E17L thru E19L) & 28 MPa (Piers E20L thru E22L), if rebar spiral in local anchor area provided is longer than the min length recommended by manufacturer. Contractor shall submit the calculation to Engineer for approval prior to construction.

SUGGESTED PRESTRESSING SEQUENCE - HINGES EW TO ABUT E23L

Stressing shall not take place until the deck has been placed and has reached specified strength. (100% f'ci)
Pjack should be applied in stages:
(Pjack denotes prestressed jacking forces @ different locations where specified)
Diaphragms C and D shall be prestressed prior to pier cap transverse stressing and girder longitudinal stressing from Hinge EW to Hinge FW. See "Westbound Hinge EW Details No. 5" sheet for Diaphragms C and D stressing sequence and requirements. △1
Pier cap transverse stressing and girder longitudinal stressing shall not occur until 35 days after placement of deck slab concrete.
Stage 1: Stress all Pier Cap Beams to 25% Pjack.
Stage 2: Stress all Girders (Girders (B) thru (K) only) to 25% Pjack.
Stage 3: Repeat stages 1 & 2 with increasing Pjack by 25% for each process till reaching 75% Pjack.
Stage 4: Stress all Pier Cap Beams to 100% Pjack, grout the prestressing ducts in Pier Cap Beams and patch the blockout with quick-set concrete only.
Stage 5: Stress Girders (A) & (L) and deck slab longitudinal prestressing in frame 1 to 100% Pjack after the grout/concrete at Pier Cap Beam prestressing ducts and anchorage blockout reaches required strength.
Stage 6: Stress all Girders (Girder (B) thru (K) only) to 100% Pjack.
Stage 7: Grout all ducts at Girders (Girders (A) thru (L)) after all prestressing is completed.
At no time during stressing operations shall the eccentric prestress force about the center line of pier exceed the capacity of one duct.
No removal of falsework is allowed until all stressing and grouting are completed.
For Girder designation, see "Westbound Girder Layout No. 1 thru No. 4" sheets.

MARK	DATE	DESCRIPTIONS	BY	CH'D	CCO#
△1	7/21/08	REVISED PRESTRESS SEQUENCE	VT	JSK	
△2	3/20/09	REVISED PRESTRESS PATH	VT	JSK	

REVISIONS

CONTRACT CHANGE ORDER NO. 86
SHEET 9 OF 35 6/11/09

REGISTERED PROFESSIONAL ENGINEER — VINH DIEU TRINH — No. 50685 — Exp. 9-30-2009 — CIVIL — STATE OF CALIFORNIA

STAMP IS VALID FOR REVISION △2 ONLY

Note:
1. In order to minimize the congestion of jacking end blockouts, the contractor shall divide the Pjack equally & symmetrically and apply it simultaneously at both ends of the Cap Beam. The jacking and anchorage ends shall be alternately located so they do not interfere with each other at the same end. Each duct shall be prestressed from one end only. The distance between the jacking end and anchorage end (on the same end of the beam) shall be as shown in "Pier Cap Beam Prestressing Table". For center of gravity of prestressing path, see "Pier Cap Beam Prestressing Path Layout".
2. Control dimensions are given horizontally or vertically.
3. For Cap Beam Dimensions, see "Westbound Typical Section No. 1 & 2" sheets.
4. Pre-installed Strand duct should be used for pier cap prestress, unless jacking blockout from soffit is approved.

LEGEND
⊠ = Denotes theoretical point of no movement for one end stressing
(A) Denotes Girder designation

ALL DIMENSIONS ARE IN MILLIMETERS UNLESS OTHERWISE SHOWN

SAN FRANCISCO OAKLAND BAY BRIDGE
EAST SPAN SEISMIC SAFETY PROJECT
OAKLAND APPROACH STRUCTURES-PHASE 1
WESTBOUND PIER DETAILS NO. 10

DESIGN OVERSIGHT — SAM AKKAD, FRANCISCO CARPIO, BERNARD CHAN, HASAN EZ-NATUR — 4/3/2009
SIGN OFF DATE
Rev. Date: 5-18-98

DESIGN BY K. Russell CHECKED A. Moubayed
DETAILS BY A. Segura CHECKED A. Moubayed
QUANTITIES BY O. Jaradat CHECKED H. Haroun

ORIGINAL SCALE IN MILLIMETERS FOR REDUCED PLANS 0 10 20 30 40 50 60 70 80 90 100

PREPARED FOR THE STATE OF CALIFORNIA DEPARTMENT OF TRANSPORTATION

Adam Wang
PROJECT ENGINEER

CU 04
EA 0120L1

BRIDGE NO. 34-0006L/R
KILOMETER POST 1.6

DISREGARD PRINTS BEARING EARLIER REVISION DATES

REVISION DATES (PRELIMINARY STAGE ONLY) 5/12/05 10/26/05 8/28/06 10/20/06 1/12/06 5/24/06 11/14/06 1/24/06 4/3/06 7/28/06

SHEET 65R2 OF 224

DIST	COUNTY	ROUTE	KILOMETER POST TOTAL PROJECT	SHEET NO.	TOTAL SHEETS
04	Ala	80	1.6/2.7	179R1	643

Caltrans Metric

Adam Wang
REGISTERED ENGINEER - CIVIL

1-29-07
PLANS APPROVAL DATE

REGISTERED PROFESSIONAL ENGINEER ADAM TH WANG No. 40402 Exp. 3-31-2007 CIVIL STATE OF CALIFORNIA

The State of California or its officers or agents shall not be responsible for the accuracy or completeness of electronic copies of this plan sheet.

T.Y. LIN / MOFFATT & NICHOL
TWO HARRISON STREET, SUITE 500
SAN FRANCISCO, CA 94105

W. KOO & ASSOCIATES, INC
625 THE CITY DRIVE SOUTH, SUITE 200
ORANGE, CA 92868

CONTRACT NO. 04-0120L4
CCO # 86
Sheet 10 of 35 6/11/09

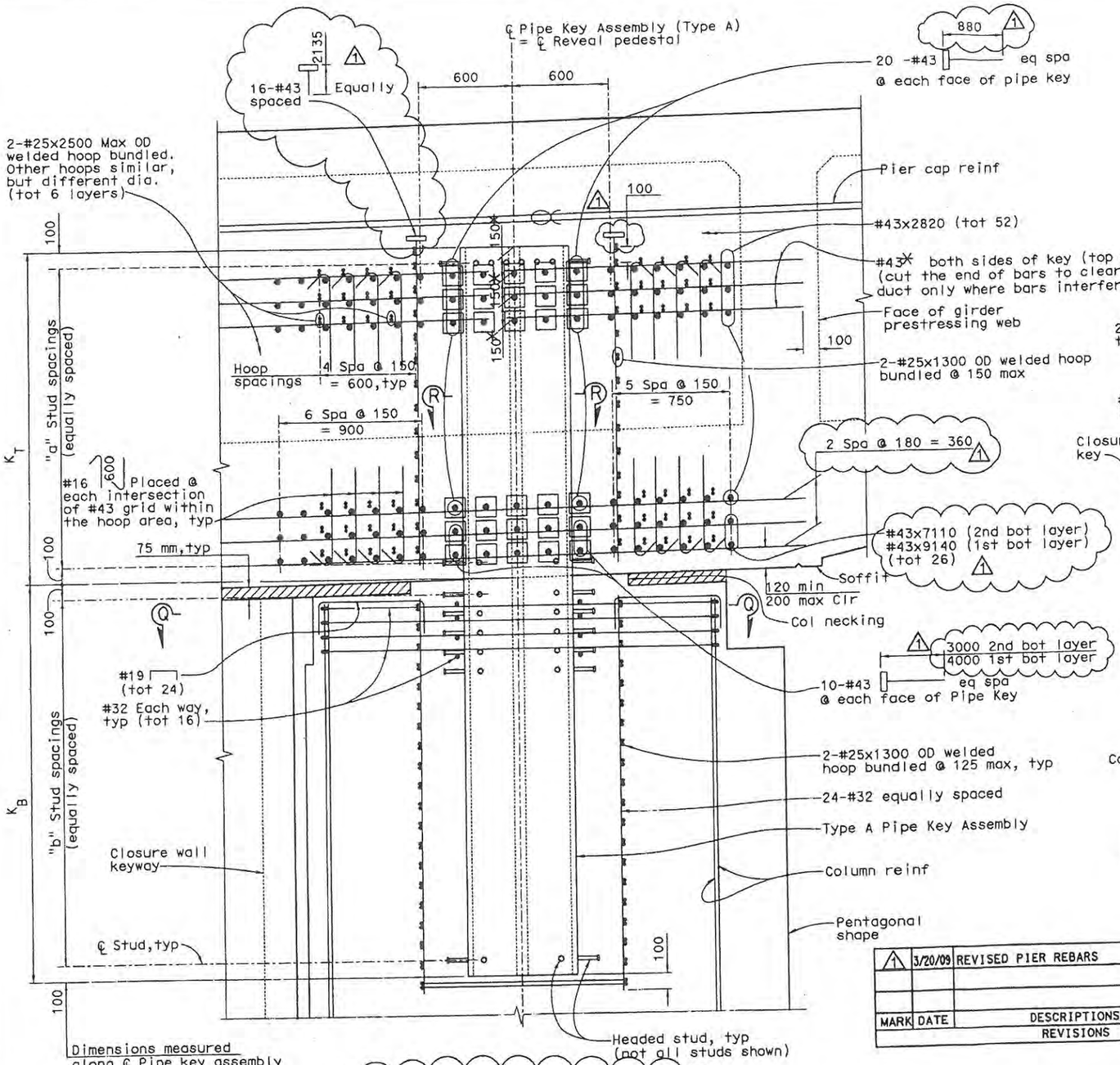

PIERS E18L THRU E22L - PIPE KEY ASSEMBLY DETAILS

1:15

LEGEND

Denotes bundled bars

Denotes headed bar

* For dimension @ Pier E22L, see "WB Pier Details No. 9" sheet

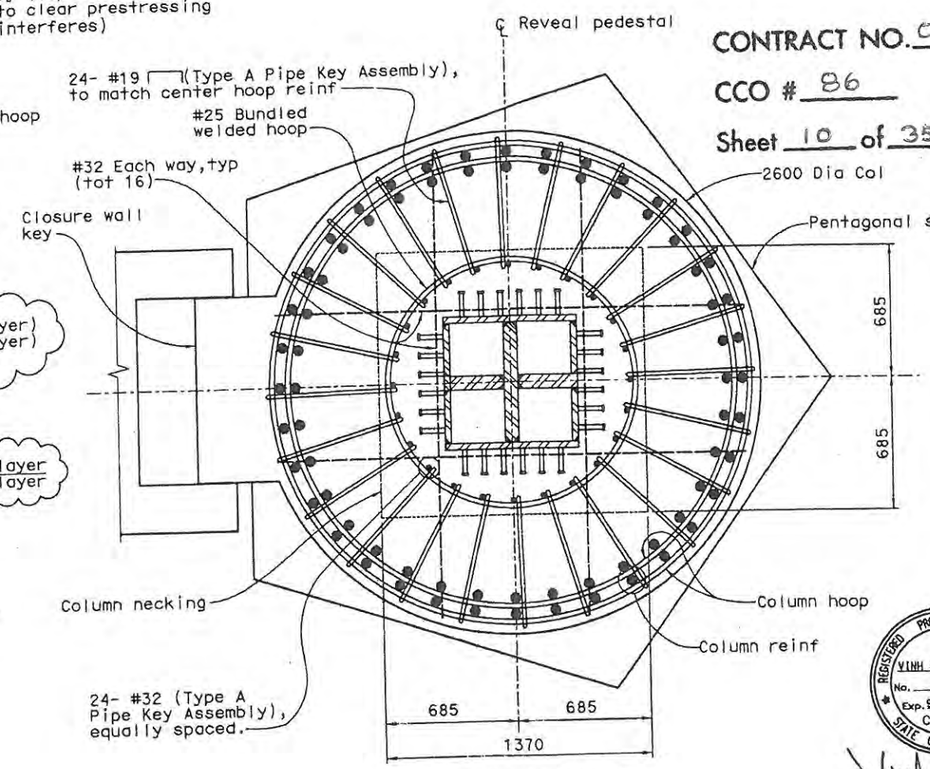

SECTION Q-Q

1:15

REGISTERED PROFESSIONAL ENGINEER VINH DIEU TRINH No. 50685 Exp. 9-30-2009 CIVIL STATE OF CALIFORNIA

STAMP IS VALID FOR REVISION 1 ONLY

MARK	DATE	DESCRIPTIONS	BY	CH'D	CCO#
1	3/20/09	REVISED PIER REBARS	VT	JSK	

REVISIONS

Notes:

1. See "Pipe Key Assembly Table" on "Westbound Pier Details No. 12" sheet for dimensions not shown.
2. For "Section R-R", see "Westbound Pier Details No. 12" sheet.
3. For bar spiral & hoop splice, see "Bar Spiral Splice and Spiral Anchor and Welded Hoop Detail" on "WB Pile Details No. 2" sheet.

ALL DIMENSIONS ARE IN MILLIMETERS UNLESS OTHERWISE SHOWN

SAN FRANCISCO OAKLAND BAY BRIDGE
EAST SPAN SEISMIC SAFETY PROJECT

OAKLAND APPROACH STRUCTURES-PHASE 1

WESTBOUND PIER DETAILS NO. 11

DESIGN OVERSIGHT: SAM AKKAD, FRANCISCO CARPIO, BERNARD CHAN, HASAN EL-NATUR
SIGN OFF DATE: 4/3/2009

DESIGN: X. Wu — CHECKED: A. Moubayed
DETAILS: G. Buelow — CHECKED: A. Moubayed
QUANTITIES: O. Jaradat — CHECKED: H. Haroun

PREPARED FOR THE STATE OF CALIFORNIA DEPARTMENT OF TRANSPORTATION

Adam Wang, PROJECT ENGINEER

BRIDGE NO. 34-0006L/R
KILOMETER POST 1.6

CU 04
EA 0120L1

DISREGARD PRINTS BEARING EARLIER REVISION DATES

REVISION DATES (PRELIMINARY STAGE ONLY): 5/18/03 10/16/03 1/23/04 10/29/04 2/28/05 5/27/05 11/14/05 1/13/06 1/27/06 1/31/06

SHEET 66R1 OF 224

ORIGINAL SCALE IN MILLIMETERS FOR REDUCED PLANS 0 10 20 30 40 50 60 70 80 90 100

Rev. Date: 5-18-98

LEILE -> PROJECT

or 3, 2009

DIST	COUNTY	ROUTE	KILOMETER POST TOTAL PROJECT	SHEET NO.	TOTAL SHEETS
04	Ala	80	1.6/2.7	179S1	643

REGISTERED ENGINEER - CIVIL

03-20-09
PLANS APPROVAL DATE

PROFESSIONAL ENGINEER VINH DIEU TRINH No. 50685 Exp. 9-30-2009 CIVIL STATE OF CALIFORNIA

The State of California or its officers or agents shall not be responsible for the accuracy or completeness of electronic copies of this plan sheet.

T.Y. LIN / MOFFATT & NICHOL
TWO HARRISON STREET, SUITE 500
SAN FRANCISCO, CA 94105

WKE, INC.
400 NORTH TUSTIN AVENUE, SUITE 285
SANTA ANA, CA 92705

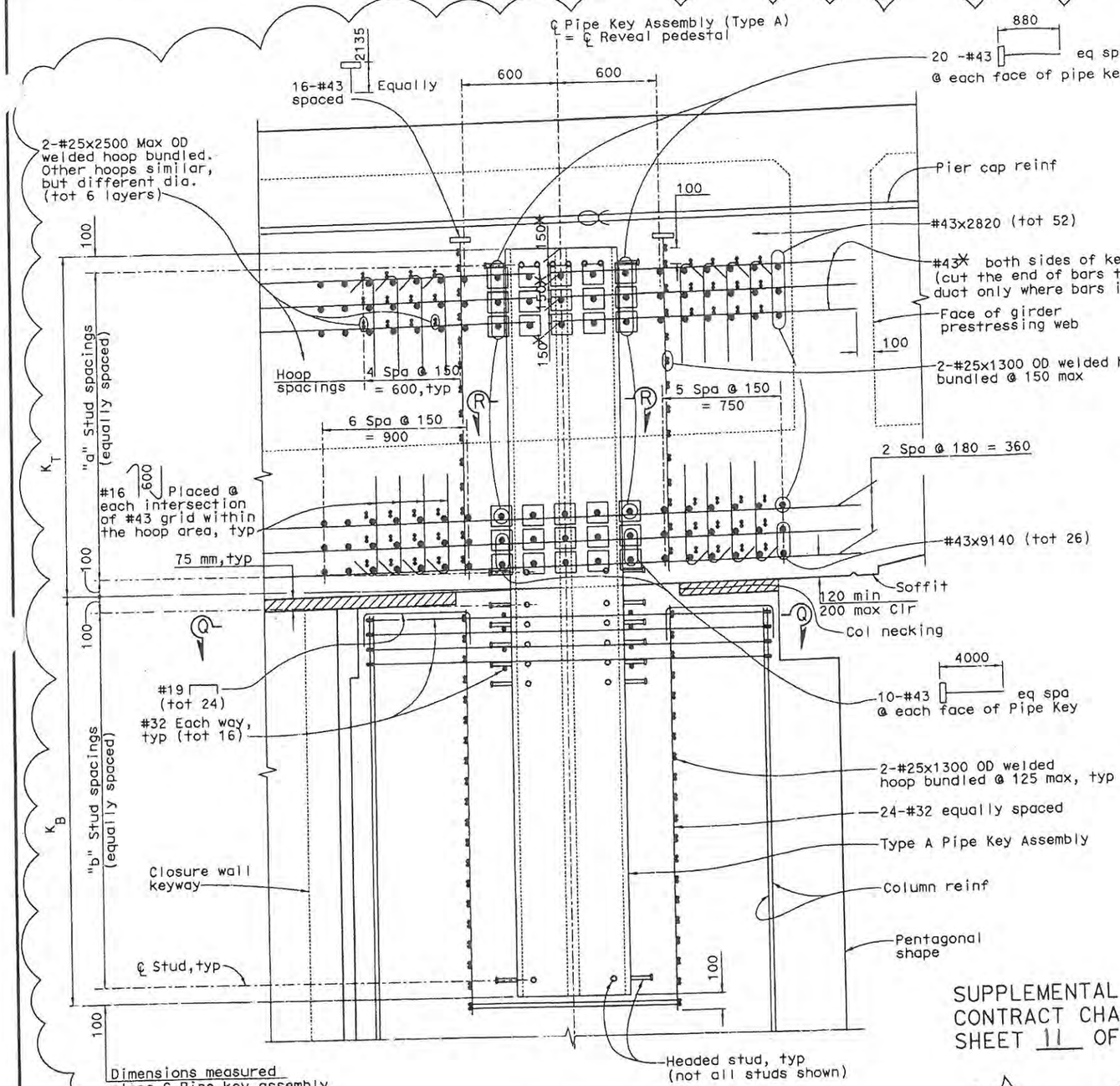

PIERS E17L
PIPE KEY ASSEMBLY DETAILS
1:15

LEGEND

- Denotes bundled bars
- Denotes headed bar
- * For dimension @ Pier E22L, see "WB Pier Details No. 9" sheet

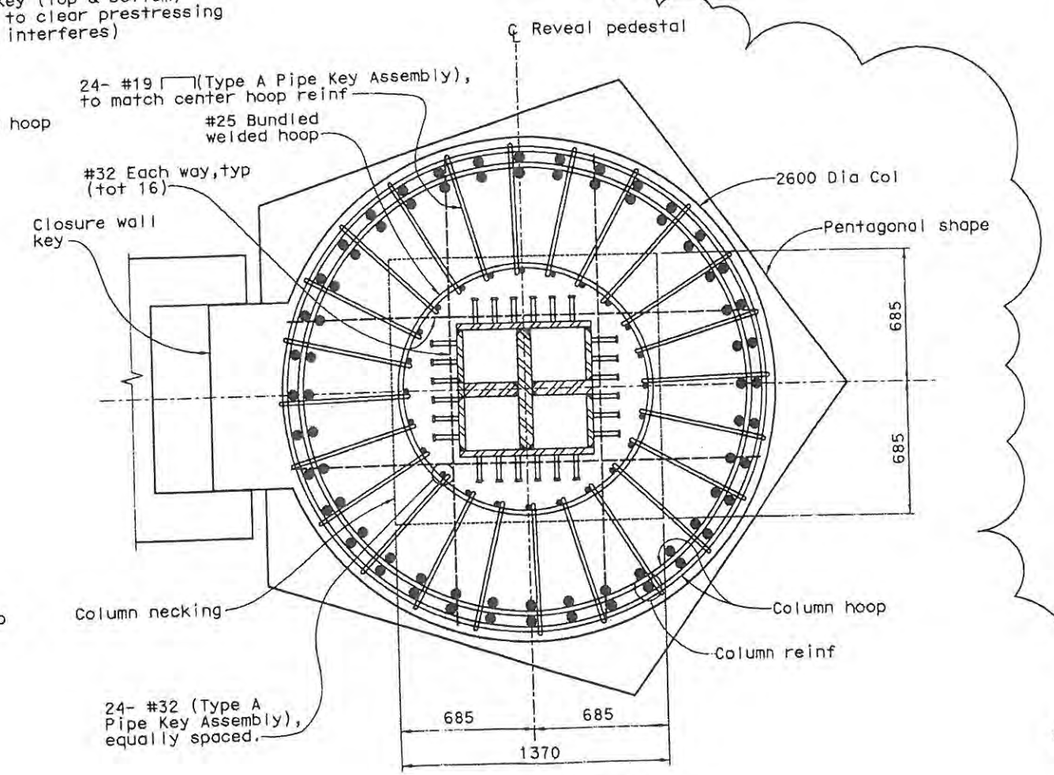

SECTION Q-Q
1:15

SUPPLEMENTAL SHEET
CONTRACT CHANGE ORDER NO. 86
SHEET 11 OF 35 6/11/09

Notes:

1. See "Pipe Key Assembly Table" on "Westbound Pier Details No. 12" sheet for dimensions not shown.
2. For "Section R-R", see "Westbound Pier Details No. 12" sheet.
3. For bar spiral & hoop splice, see "Bar Spiral Splice and Spiral Anchor and Welded Hoop Detail" on "WB Pile Details No. 2" sheet.

ALL DIMENSIONS ARE IN MILLIMETERS UNLESS OTHERWISE SHOWN

SAN FRANCISCO OAKLAND BAY BRIDGE
EAST SPAN SEISMIC SAFETY PROJECT

OAKLAND APPROACH STRUCTURES-PHASE 1

WESTBOUND PIER DETAILS NO. 11A

DESIGN OVERSIGHT — HASAN EL-NATUR — 4/3/2009 — SIGN OFF DATE

DESIGN	BY V. Trinh	CHECKED Y. Shangkuan	
DETAILS	BY N. Shu	CHECKED V. Trinh	
QUANTITIES	BY	CHECKED	

PREPARED FOR THE STATE OF CALIFORNIA DEPARTMENT OF TRANSPORTATION

Adam Wang
PROJECT ENGINEER

BRIDGE NO. 34-0006L/R
KILOMETER POST 1.6

CU 04
EA 0120L1

DISREGARD PRINTS BEARING EARLIER REVISION DATES 3/20/08

REVISION DATES (PRELIMINARY STAGE ONLY)

SHEET 66S1 OF 224

ORIGINAL SCALE IN MILLIMETERS FOR REDUCED PLANS 0 10 20 30 40 50 60 70 80 90 100

Rev. Date: 5-18-98

Apr 3, 2009

DIST	COUNTY	ROUTE	KILOMETER POST TOTAL PROJECT	SHEET NO.	TOTAL SHEETS
04	Ala	80	1.6/2.7	181R1	643

Caltrans Metric

Adam Wang
REGISTERED ENGINEER - CIVIL

1-29-07
PLANS APPROVAL DATE

REGISTERED PROFESSIONAL ENGINEER ADAM TM WANG No. 40402 Exp. 3-31-2007 CIVIL STATE OF CALIFORNIA

The State of California or its officers or agents shall not be responsible for the accuracy or completeness of electronic copies of this plan sheet.

T.Y. LIN / MOFFATT & NICHOL
TWO HARRISON STREET, SUITE 500
SAN FRANCISCO, CA 94105

W. KOO & ASSOCIATES, INC
625 THE CITY DRIVE SOUTH, SUITE 200
ORANGE, CA 92868

Notes:

1. In order to minimize the congestion of jacking end blockouts, The Contractor shall divide the Pjack equally & symmetrically and apply it simultaneously at both ends of Cap Beam. To reduce the anchorage blockouts @ pier cap end, Contractor should use the pre-installed strand ducts with grout tube at both ends. The jacking and anchorage ends shall be alternately located so they do not interfere with each other at the same end. Each duct shall be prestressed from one end only. The distance between the jacking end and anchorage end shall be as shown on "WB Pier Details No.10" sheet.
2. Jacking end blockouts @ left end shown. Jacking end blockouts @ right end similar but opposite hand. End view shown for 5 ducts (for total 10 ducts) alternated @ both ends. Contractor shall submit the end blockout details based on the actual numbers of ducts to Engineer for approval.
3. Girder prestressing ducts shall be symmetrically placed. Move to center of girder to clear Pier Cap Beam ducts if two-level blockouts are used.
4. Reinforcement interfering with the prestress jacking process @ prestressing blockouts shall be spliced or coupled after prestress is complete as approved by the Engineer.
5. For Girder designation, see "Westbound Girder Layout No. 1 & No. 3" sheets.
6. Elevation shown for Pier E17L, others Piers are similar.

LEGEND

Denotes bundled bars
Denotes hooked bar (both ends)

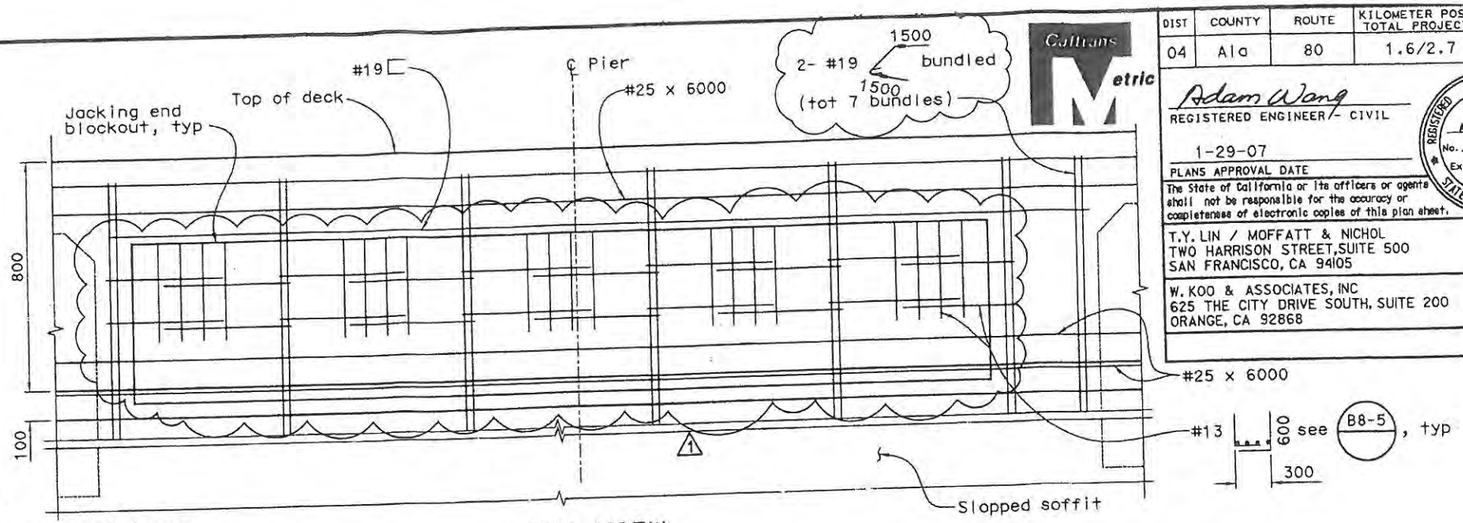

END VIEW

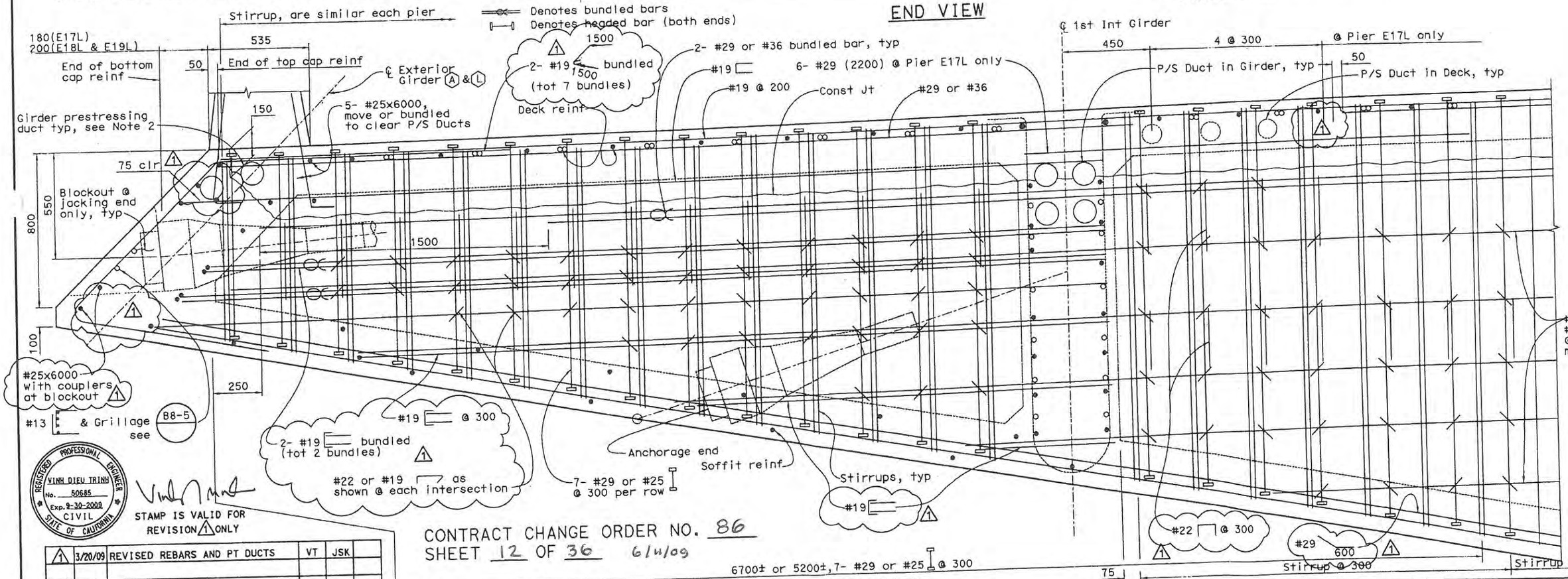

ELEVATION

CAP BEAM END DETAILS
1:10

ALL DIMENSIONS ARE IN MILLIMETERS UNLESS OTHERWISE SHOWN

REGISTERED PROFESSIONAL ENGINEER VINH DIEU TRINH No. 50685 Exp. 9-30-2009 CIVIL STATE OF CALIFORNIA

STAMP IS VALID FOR REVISION 1 ONLY

CONTRACT CHANGE ORDER NO. 86
SHEET 12 OF 36 6/11/09

MARK	DATE	DESCRIPTIONS	BY	CH'D	CCO#
1	3/20/09	REVISED REBARS AND PT DUCTS	VT	JSK	

REVISIONS

DESIGN OVERSIGHT
SAM AKKAD FRANCISCO CARPIO BERNARD CHAN HASAN EL-NATUR
4/3/2009
SIGN OFF DATE
Rev. Date: 5-18-98

DESIGN	BY K. Russell	CHECKED A. Moubayed	
DETAILS	BY A. Segura	CHECKED A. Moubayed	
QUANTITIES	BY O. Jaradat	CHECKED H. Haroun	

ORIGINAL SCALE IN MILLIMETERS FOR REDUCED PLANS 0 10 20 30 40 50 60 70 80 90 100

PREPARED FOR THE STATE OF CALIFORNIA DEPARTMENT OF TRANSPORTATION

Adam Wang
PROJECT ENGINEER

CU 04
EA 0120L1

BRIDGE NO. 34-0006L/R
KILOMETER POST 1.6

DISREGARD PRINTS BEARING EARLIER REVISION DATES

REVISION DATES (PRELIMINARY STAGE ONLY)
5/18/03 10/24/03 8/20/04 10/29/04 2/18/05 6/24/05 11/14/05 1/13/06 4/13/06 7/28/06

SHEET 68R1 OF 224

SAN FRANCISCO OAKLAND BAY BRIDGE
EAST SPAN SEISMIC SAFETY PROJECT

OAKLAND APPROACH STRUCTURES-PHASE 1

WESTBOUND PIER DETAILS NO. 13

r 3, 2009

DIST	COUNTY	ROUTE	KILOMETER POST TOTAL PROJECT	SHEET NO.	TOTAL SHEETS
04	Ala	80	1.6/2.7	205R2	643

Caltrans Metric

Adam Wang
REGISTERED ENGINEER - CIVIL

1-29-07
PLANS APPROVAL DATE

REGISTERED PROFESSIONAL ENGINEER — ADAM TN WANG No. 40402 Exp. 3-31-2007 CIVIL — STATE OF CALIFORNIA

The State of California or its officers or agents shall not be responsible for the accuracy or completeness of electronic copies of this plan sheet.

T.Y. LIN / MOFFATT & NICHOL
TWO HARRISON STREET, SUITE 500
SAN FRANCISCO, CA 94105

W. KOO & ASSOCIATES, INC
625 THE CITY DRIVE SOUTH, SUITE 200
ORANGE, CA 92868

To get to the Caltrans web site, go to: http://www.dot.ca.gov

Notes:
1. For girders (A) (B) (K) & (L) see "Westbound Girder Layout No. 2" sheet.
2. For Frame 2, see "Westbound Girder Layout No. 3" sheet.
3. Soffit varies linearly @ constant rate change from Hinge EW to Hinge FW.
4. For intermediate diaphragm, see "Westbound Girder Details" sheet.
5. For "Camber Diagram", see "Westbound Camber Diagrams" sheet.
6. For Deck & Soffit slab thickness not shown, see "Westbound Typical Section No. 1" sheet.
7. For Prestressing Notes see "Westbound Girder Layout No. 2" sheet.
8. Intermediate diaphragms to be placed radially. Dimensions shown are measured along ℄ WB Route 80.
9. For Service platform details, see "Service Platforms, Utility Vaults and Precast Wall General Plan 1" sheet.
10. For access openings, see "Westbound Girder Layout No. 1A and 3A" sheets.
11. For electrical conduit layout and pipe supports, loop detector details, see "Roadway Plans".
12. For mechanical layout and pipe supports details not shown, see "Roadway Plans".
13. For Utilities designation (A), see "WB Typ Section No. 1" sheet.
14. Girder opening locations are shown on "Westbound Girder Layout No. 1A and 3A" sheets.
15. The preformed loop Detector will be cast with the deck and pull box will be provided as stated on preformed loop schedule as shown on "Roadway Plans".
16. See "Detail 2" on "Westbound Hinge EW Detail No. 5" sheet for additional hair pin reinf around duct.

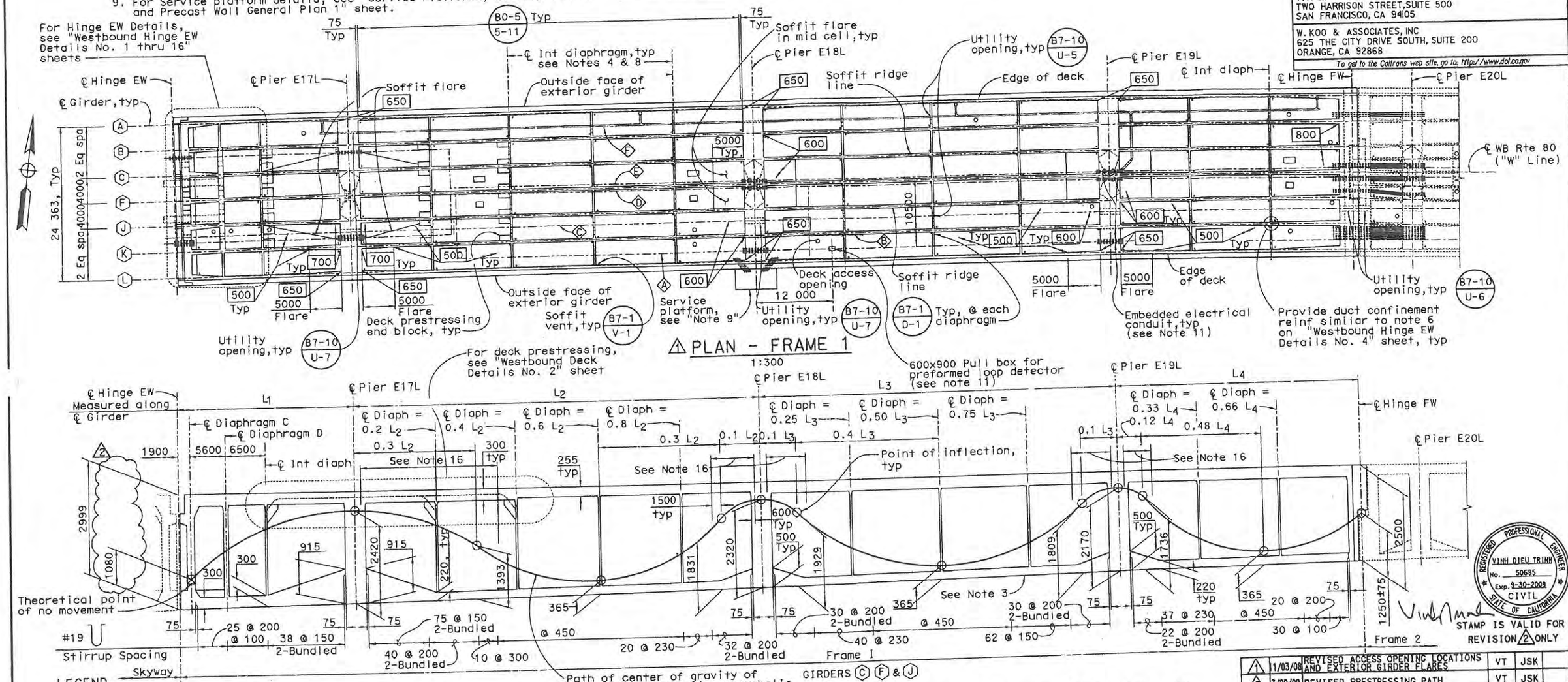

LEGEND

Indicates girder stem width in millimeters, see (B7-1 / S-3)

Indicates girder designation (A)

0.5 L_1 Indicates the fraction of each girder length in the span noted by the subscript

Denotes embedded conduits

Note:
The Contractor shall verify all controlling field dimensions before ordering or fabricating any material

CONTRACT CHANGE ORDER NO. 86
SHEET 13 OF 35 · 6/11/09

MARK	DATE	DESCRIPTIONS	BY	CH'D	CCO#
1	11/03/08	REVISED ACCESS OPENING LOCATIONS AND EXTERIOR GIRDER FLARES	VT	JSK	
2	3/20/09	REVISED PRESTRESSING PATH	VT	JSK	
		REVISIONS			

LONGITUDINAL SECTION - FRAME 1
No Scale

ALL DIMENSIONS ARE IN MILLIMETERS UNLESS OTHERWISE SHOWN

SAN FRANCISCO OAKLAND BAY BRIDGE
EAST SPAN SEISMIC SAFETY PROJECT

OAKLAND APPROACH STRUCTURES-PHASE 1

WESTBOUND GIRDER LAYOUT NO. 1

DESIGN OVERSIGHT
SAM AKKAD FRANCISCO CARPIO BERNARD CHAN HASAN EL-NATUR
4/3/2009
SIGN OFF DATE

	BY	CHECKED
DESIGN	K. Russell	A. Moubayed
DETAILS	G. Buelow	A. Moubayed
QUANTITIES	K. Russell	H. Haroun

PREPARED FOR THE STATE OF CALIFORNIA DEPARTMENT OF TRANSPORTATION

Adam Wang
PROJECT ENGINEER

CU 04
EA 0120L1

BRIDGE NO. 34-0006L/R
KILOMETER POST 1.6

DISREGARD PRINTS BEARING EARLIER REVISION DATES

REVISION DATES (PRELIMINARY STAGE ONLY) 5/13/03 10/20/03 8/20/04 10/29/04 2/24/05 6/27/05 11/14/05 1/31/06 4/13/06 7/28/06

SHEET 92R2 OF 224

ORIGINAL SCALE IN MILLIMETERS FOR REDUCED PLANS 0 10 20 30 40 50 60 70 80 90 100

Rev. Date: 5-18-98

REGISTERED PROFESSIONAL ENGINEER — VINH DIEU TRINH No. 50685 Exp. 9-30-2009 CIVIL — STATE OF CALIFORNIA

STAMP IS VALID FOR REVISION 2 ONLY

DIST	COUNTY	ROUTE	KILOMETER POST TOTAL PROJECT	SHEET NO.	TOTAL SHEETS
04	Ala	80	1.6/2.7	206R1	643

Caltrans Metric

Adam Wang
REGISTERED ENGINEER - CIVIL
1-29-07
PLANS APPROVAL DATE

REGISTERED PROFESSIONAL ENGINEER ADAM TH WANG No. 40402 Exp. 3-31-2007 CIVIL STATE OF CALIFORNIA

The State of California or its officers or agents shall not be responsible for the accuracy or completeness of electronic copies of this plan sheet.

T.Y. LIN / MOFFATT & NICHOL
TWO HARRISON STREET, SUITE 500
SAN FRANCISCO, CA 94105

W. KOO & ASSOCIATES, INC
625 THE CITY DRIVE SOUTH, SUITE 200
ORANGE, CA 92868

To get to the Caltrans web site, go to: http://www.dot.ca.gov

PRESTRESSING NOTES

1860 MPa Low Relaxation Strand:
Pjack — See "Pjack Table"
Anchor Set — 10 mm
k = 0.0007/m μ = 0.20
Total Number of Girders = 7

Distribution of prestress force (Pjack) between girders shall not exceed the ratio of 3:2. Maximum final force variation between girders shall not exceed 3200 kN.

Concrete: f'_c = 45 MPa @ 28 days
f'_{ci} = 43✳ MPa @ time of stressing

✳f'ci can be reduced to 38 MPa, if rebar spiral in local anchor area provided is longer than the min length recommended by manufacturer. Contractor shall submit the calculation to Engineer for approval prior to construction

Contractor shall submit elongation calculations based on initial stress at ⊠ = Initial force coefficient times jacking stress, see "Pjack Table"

One end stressing shall be performed from Hinge FW

REGISTERED PROFESSIONAL ENGINEER VINH DIEU TRINH No. 50685 Exp. 9-30-2009 CIVIL STATE OF CALIFORNIA

STAMP IS VALID FOR REVISION 1 ONLY

MARK	DATE	DESCRIPTIONS	BY	CH'D	CCO#
1	3/20/09	REVISE PRESTRESSING PATH	VT	JSK	

REVISIONS

CONTRACT CHANGE ORDER NO. 86
SHEET 14 OF 35 6/11/09

PJACK TABLE

Girder Designation	PJack/Girder	Initial Force Coefficient
(A) & (L)	14 470 kN	0.889
(B) & (K)	28 930 kN	0.766
(C) (F) & (J)	28 930 kN	0.680

1

Notes:

1. For Frame 2, see "Westbound Girder Layout No. 3" sheet.
2. Soffit varies linearly @ constant rate change from Hinge EW to Hinge FW.
3. For intermediate diaphragm, see "Westbound Girder Details" sheet.
4. For "Camber Diagram", see "Westbound Camber Diagrams" sheet.
5. For Deck & soffit slab thickness not shown, see "Westbound Typical Section No. 1" sheet.
6. See "Detail 2" on "Westbound Hinge EW Details No. 5" sheet for additional hair pin reinf around ducts.

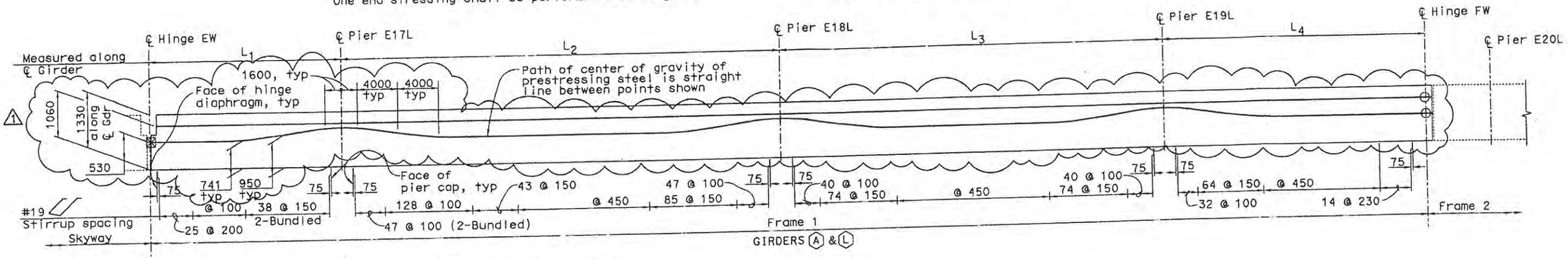

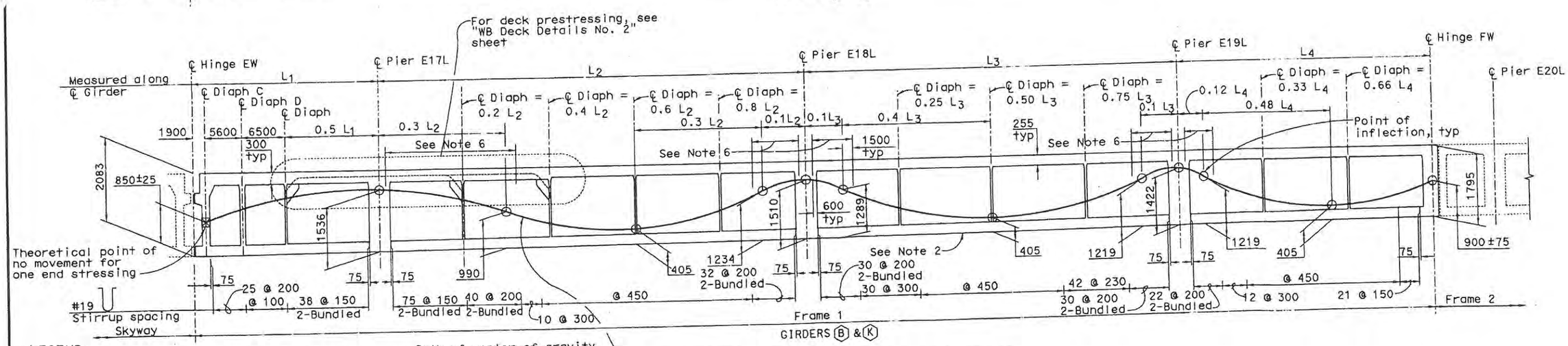

LEGEND

0.5 L_1 Indicates the fraction of each girder length in the span noted by the subscript

(A) Indicates girder designation

Note:
The Contractor shall verify all controlling field dimensions before ordering or fabricating any material

LONGITUDINAL SECTION - FRAME 1

No Scale

ALL DIMENSIONS ARE IN MILLIMETERS UNLESS OTHERWISE SHOWN

SAN FRANCISCO OAKLAND BAY BRIDGE
EAST SPAN SEISMIC SAFETY PROJECT

OAKLAND APPROACH STRUCTURES-PHASE 1

WESTBOUND GIRDER LAYOUT NO. 2

DESIGN OVERSIGHT
SAM AKKAD FRANCISCO CARPIO BERNARD CHAN HASAN-EL-NATUR
SIGN OFF DATE 4/3/2009

DESIGN	BY K. Russell	CHECKED	A. Moubayed
DETAILS	BY G. Buelow	CHECKED	A. Moubayed
QUANTITIES	BY O. Jaradat	CHECKED	H. Haroun

PREPARED FOR THE STATE OF CALIFORNIA DEPARTMENT OF TRANSPORTATION

Adam Wang
PROJECT ENGINEER

BRIDGE NO. 34-0006L/R
KILOMETER POST 1.6

CU 04
EA 0120L1

DISREGARD PRINTS BEARING EARLIER REVISION DATES

REVISION DATES (PRELIMINARY STAGE ONLY) 5/18/05 10/20/05 8/28/06 10/27/06 2/21/06 6/20/06 11/17/06 1/22/06 4/12/06 7/28/06

SHEET 93R1 OF 224

ORIGINAL SCALE IN MILLIMETERS FOR REDUCED PLANS 0 10 20 30 40 50 60 70 80 90 100

Rev. Date: 5-18-98

r 3, 2009

To get to the Caltrans web site, go to: http://www.dot.ca.gov

DIST	COUNTY	ROUTE	KILOMETER POST TOTAL PROJECT	SHEET NO.	TOTAL SHEETS
04	Ala	80	1.6/2.7	207R3	643

Caltrans Metric

Adam Wang
REGISTERED ENGINEER - CIVIL
1-29-07
PLANS APPROVAL DATE

REGISTERED PROFESSIONAL ENGINEER ADAM TN WANG No. 40402 Exp. 3-31-2007 CIVIL STATE OF CALIFORNIA

The State of California or its officers or agents shall not be responsible for the accuracy or completeness of electronic copies of this plan sheet.

T.Y. LIN / MOFFATT & NICHOL
TWO HARRISON STREET, SUITE 500
SAN FRANCISCO, CA 94105

W. KOO & ASSOCIATES, INC
625 THE CITY DRIVE SOUTH, SUITE 200
ORANGE, CA 92868

MARK	DATE	DESCRIPTIONS	BY	CH'D	CCO#
1	8/14/08	UTILITY OPENING CLARIFIED	VT	JSK	
2	11/03/08	REVISED ACCESS OPENING LOCATIONS AND EXTERIOR GIRDER FLARES	VT	JSK	
3	3/20/09	REVISED PT PATH	VT	JSK	

REVISIONS

REGISTERED PROFESSIONAL ENGINEER VINH DIEU TRINH No. 50685 Exp. 9-30-2009 CIVIL STATE OF CALIFORNIA

STAMP IS VALID FOR REVISION 3 ONLY

CONTRACT CHANGE ORDER NO. 86
SHEET 15 OF 35 6/11/09

LEGEND

- Indicates girder stem width in millimeters, see B7-1 / S-3
- (A) Indicates girder designation
- 0.5 L_1 Indicates the fraction of each girder length in the span noted by the subscript
- Denotes embedded conduits

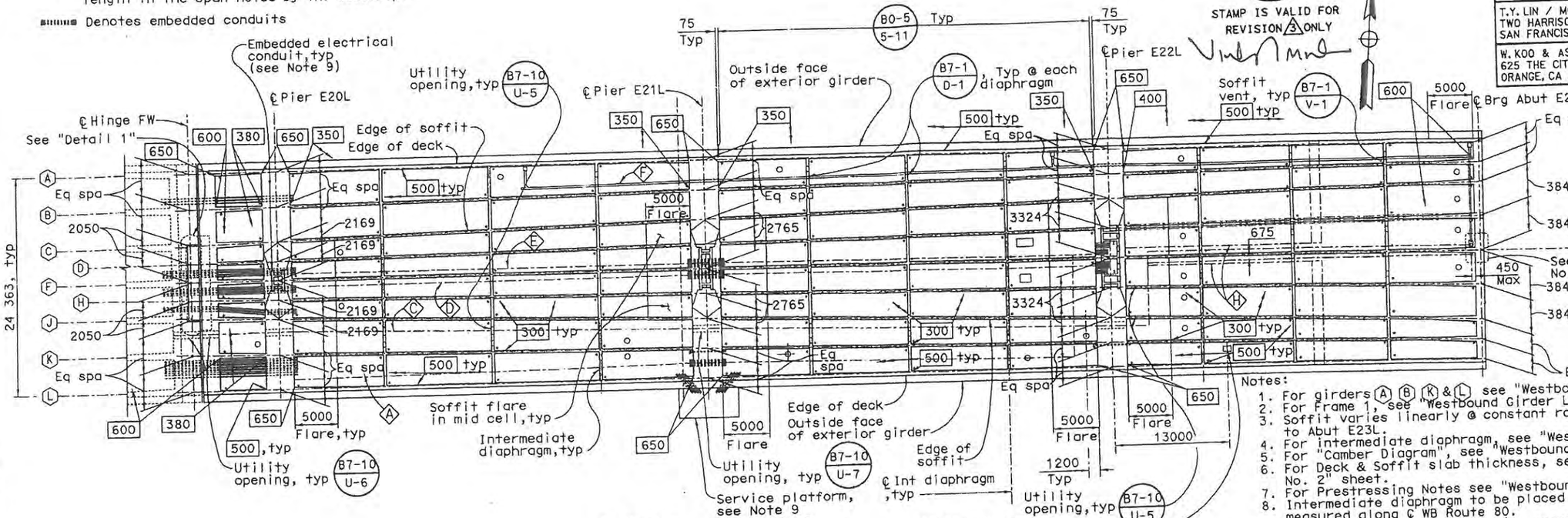

PLAN - FRAME 2

1:250

Notes:

1. For girders (A) (B) (K) & (L) see "Westbound Girder Layout No. 4" sheet.
2. For Frame 1, see "Westbound Girder Layout No. 1" sheet.
3. Soffit varies linearly @ constant rate change from Hinge FW to Abut E23L.
4. For intermediate diaphragm, see "Westbound Girder Details" sheet.
5. For "Camber Diagram", see "Westbound Camber Diagrams" sheet.
6. For Deck & Soffit slab thickness, see "Westbound Typical Section No. 2" sheet.
7. For Prestressing Notes see "Westbound Girder Layout No. 4" sheet.
8. Intermediate diaphragm to be placed radially. Dimensions shown are measured along ℄ WB Route 80.
9. For utility information & pipe supports not shown, see "Notes 9-15" on "Westbound Girder Layout No. 1" sheet.

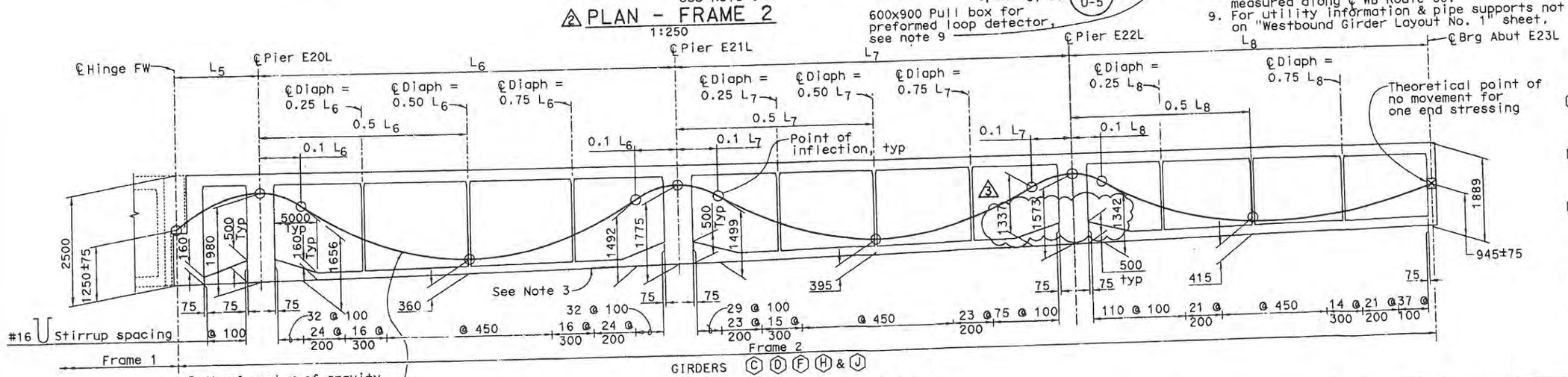

LONGITUDINAL SECTION - FRAME 2

No Scale

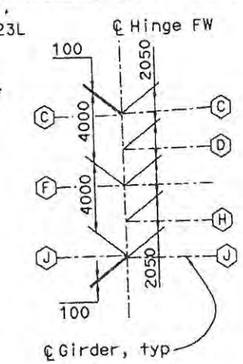

DETAIL 1

No Scale

ALL DIMENSIONS ARE IN MILLIMETERS UNLESS OTHERWISE SHOWN

SAN FRANCISCO OAKLAND BAY BRIDGE
EAST SPAN SEISMIC SAFETY PROJECT

OAKLAND APPROACH STRUCTURES-PHASE 1

WESTBOUND GIRDER LAYOUT NO. 3

DESIGN OVERSIGHT: SAM AKKAO, FRANCISCO CARPIO, BERNARD CHAN, HASAN EL-NATUR
SIGN OFF DATE: 4/3/2009

	BY	CHECKED
DESIGN	K. Russell	A. Moubayed
DETAILS	G. Buelow	A. Moubayed
QUANTITIES	O. Jaradat	H. Haroun

PREPARED FOR THE STATE OF CALIFORNIA DEPARTMENT OF TRANSPORTATION

Adam Wang
PROJECT ENGINEER

BRIDGE NO. 34-0006L/R
KILOMETER POST 1.6

CU 04
EA 0120L1

DISREGARD PRINTS BEARING EARLIER REVISION DATES

REVISION DATES (PRELIMINARY STAGE ONLY): 5/28/03 10/28/03 4/28/04 10/28/04 2/28/05 6/28/05 11/28/05 1/28/06 4/28/06 7/28/06

SHEET 94R3 OF 224

ORIGINAL SCALE IN MILLIMETERS FOR REDUCED PLANS 0 10 20 30 40 50 60 70 80 90 100

Rev. Date: 5-18-98

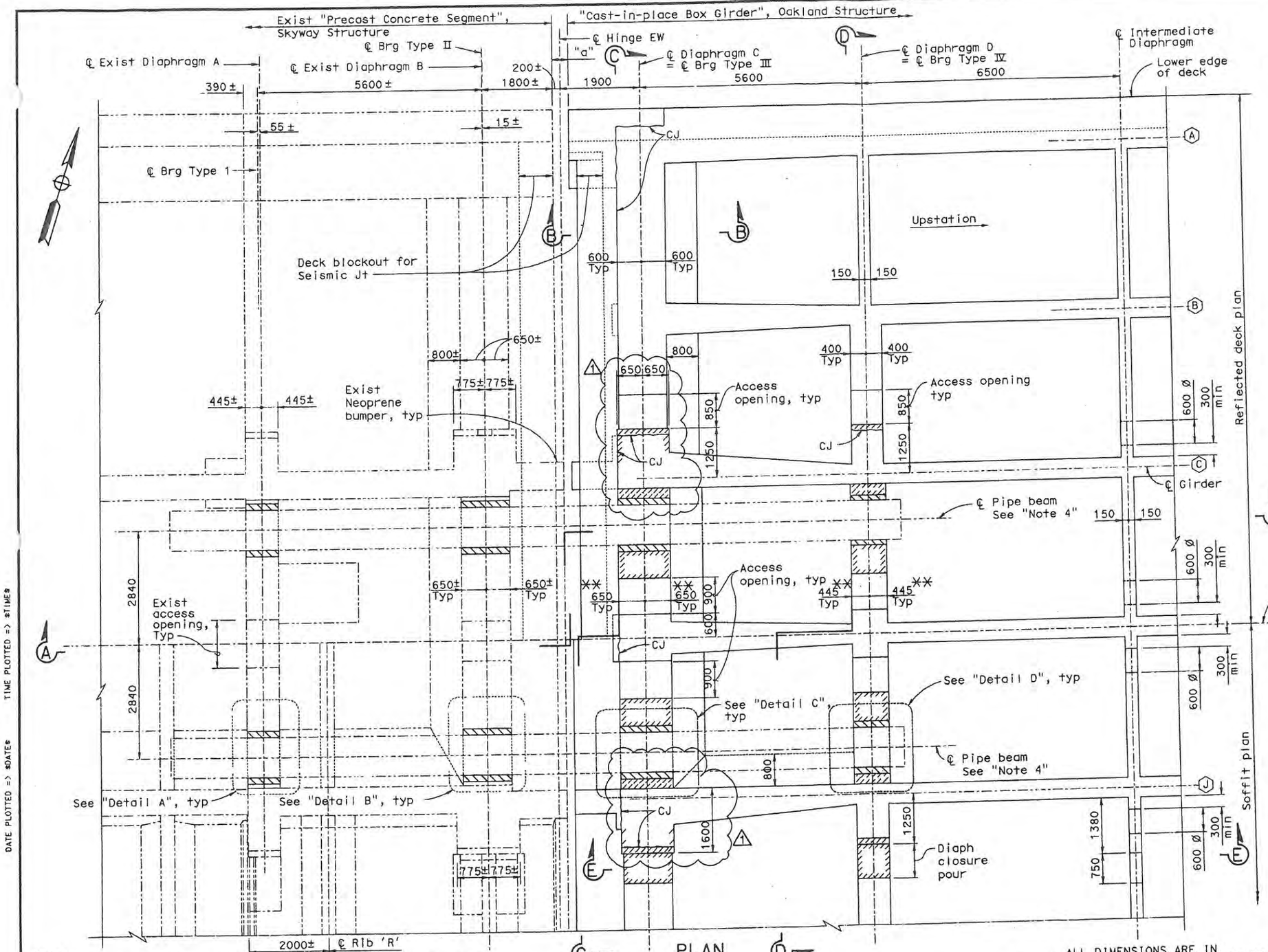

PLAN
1:50

Note:
The Contractor shall verify all controlling field dimensions before ordering or fabricating any material

ALL DIMENSIONS ARE IN MILLIMETERS UNLESS OTHERWISE SHOWN

DIST	COUNTY	ROUTE	KILOMETER POST TOTAL PROJECT	SHEET NO.	TOTAL SHEETS
04	Ala	80	1.6/2.7	222R1	643

Caltrans Metric

Adam Wang
REGISTERED ENGINEER - CIVIL
1-29-07
PLANS APPROVAL DATE

REGISTERED PROFESSIONAL ENGINEER ADAM TM WANG No. 40402 Exp. 3-31-2007 CIVIL STATE OF CALIFORNIA

The State of California or its officers or agents shall not be responsible for the accuracy or completeness of electronic copies of this plan sheet.

T.Y. LIN / MOFFATT & NICHOL
TWO HARRISON STREET, SUITE 500
SAN FRANCISCO, CA 94105

W. KOO & ASSOCIATES, INC
625 THE CITY DRIVE SOUTH, SUITE 200
ORANGE, CA 92868

LEGEND

- Denotes Bearing & grout installation
- Denotes Closure pour, see note 6
- (L) Denotes Girder designation
- ** Thickened Diaphragm between girders (C) & (J) only

MARK	DATE	DESCRIPTIONS	BY	CH'D	CCO#
1	3/20/09	REVISE ACCESS OPENING	VT	JSK	
		REVISIONS			

CONTRACT CHANGE ORDER NO. 86
SHEET 18 OF 35 6/11/09

REGISTERED PROFESSIONAL ENGINEER VINH DIEU TRINH No. 50685 Exp. 9-30-2009 CIVIL STATE OF CALIFORNIA

STAMP IS VALID FOR REVISION 1 ONLY

Notes:

1. For location of Hinges EW, see "Westbound Structure Plans" sheets.
2. For Section A-A and Section D-D, see "Westbound Hinge EW Details No.2" sheet. For "Section B-B, Section C-C and Section E-E", see "Westbound Hinge EW Details No.3" sheet. For "Details A thru D", see "Hinge E Bearing Details No.1" sheet.
3. For electrical, mechanical and other embedments or inserts not shown, see "Roadway Plans".
4. Pipe beams shown in final positions. Contractor shall Install pipe beams into final positions. For details of contract work at Hinge EW, see "Construction Sequence at Hinge E" sheet.
5. For dimension "a" & Seismic jt blockout details, see "Deck Joint Details" sheets.
6. Concrete strength for closure pour shall be same as concrete strehgth for Bridge superstructure.

SAN FRANCISCO OAKLAND BAY BRIDGE
EAST SPAN SEISMIC SAFETY PROJECT

OAKLAND APPROACH STRUCTURES-PHASE 1

WESTBOUND HINGE EW DETAILS NO.1

DESIGN OVERSIGHT
SAM AKKAD FRANCISCO CARPIO BERNARD CHAN HASAN EL-NATUR
SIGN OFF DATE 4/3/2009

	BY	CHECKED
DESIGN	X. Wu	V. Trinh
DETAILS	A. Segura	V. Trinh
QUANTITIES	C. Lin	D. Saretsky

PREPARED FOR THE STATE OF CALIFORNIA DEPARTMENT OF TRANSPORTATION

Adam Wang
PROJECT ENGINEER

CU 04
EA 0120L1

BRIDGE NO. 34-0006L/R
KILOMETER POST 1.6

DISREGARD PRINTS BEARING EARLIER REVISION DATES

REVISION DATES (PRELIMINARY STAGE ONLY) 5/18/03 10/28/03 8/30/04 10/29/04 2/28/05 5/31/05 11/14/05 1/31/06 1/31/06 1/28/06

SHEET 109R1 OF 224

ORIGINAL SCALE IN MILLIMETERS FOR REDUCED PLANS 0 10 20 30 40 50 60 70 80 90 100

Rev. Date: 5-18-98

FILENAME => $FIL DATE PLOTTED => $DATE$ TIME PLOTTED => $TIME$

r 3, 2009

DIST	COUNTY	ROUTE	KILOMETER POST TOTAL PROJECT	SHEET NO.	TOTAL SHEETS
04	Ala	80	1.6/2.7	223R3	643

Adam Wang
REGISTERED ENGINEER - CIVIL
1-29-07
PLANS APPROVAL DATE

The State of California or its officers or agents shall not be responsible for the accuracy or completeness of electronic copies of this plan sheet.

REGISTERED PROFESSIONAL ENGINEER ADAM TN WANG No. 40402 Exp. 3-31-2007 CIVIL STATE OF CALIFORNIA

T.Y. LIN / MOFFATT & NICHOL
TWO HARRISON STREET, SUITE 500
SAN FRANCISCO, CA 94105

W. KOO & ASSOCIATES, INC
625 THE CITY DRIVE SOUTH, SUITE 200
ORANGE, CA 92868

REGISTERED PROFESSIONAL ENGINEER VINH DIEU TRINH No. 50685 Exp. 9-30-2009 CIVIL STATE OF CALIFORNIA

STAMP IS VALID FOR REVISION 3 ONLY

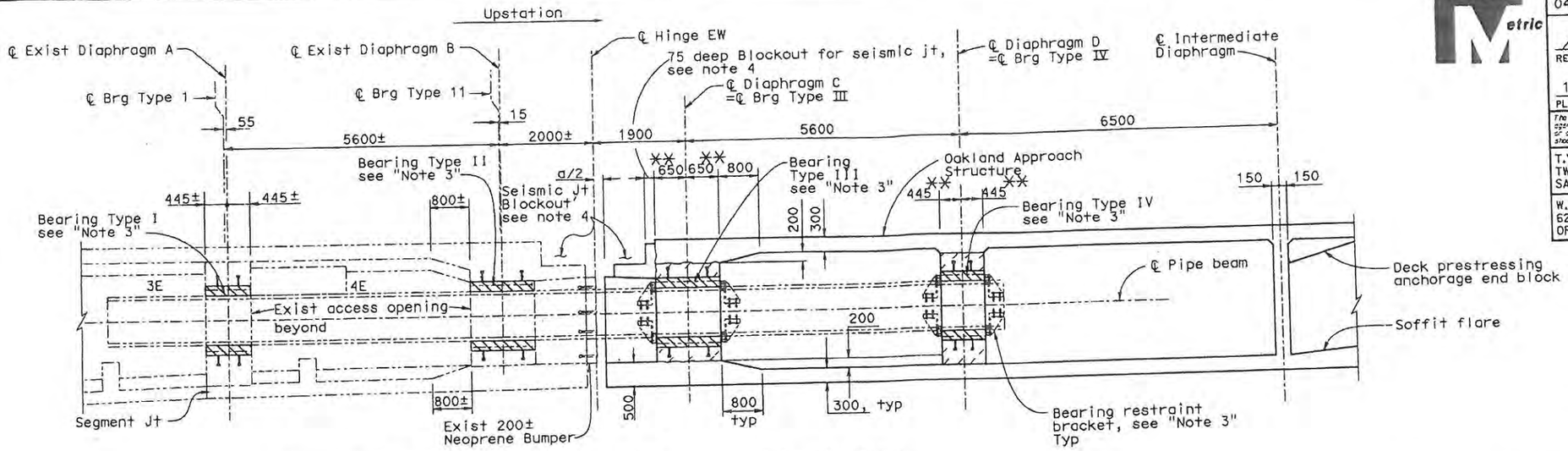

SECTION A-A
1:50

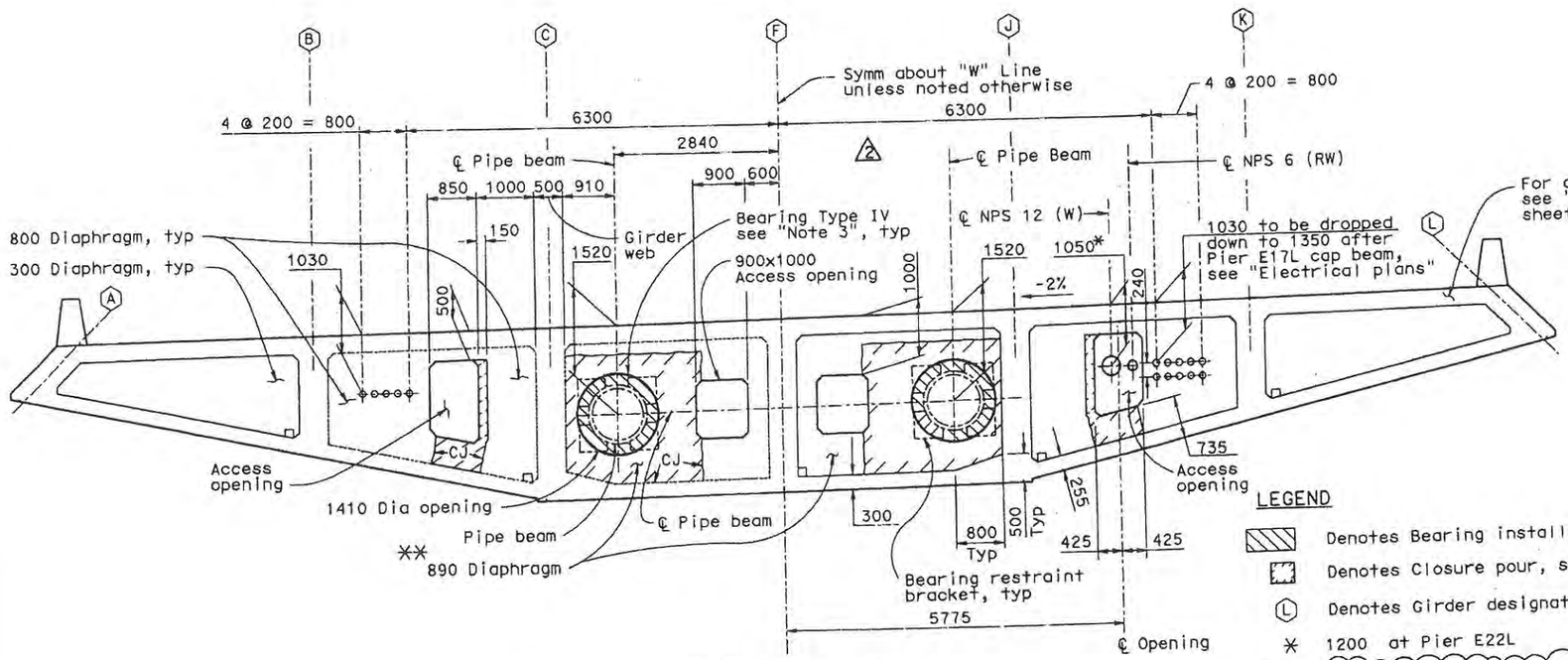

SECTION D-D
1:50

LEGEND

- Denotes Bearing installation
- Denotes Closure pour, see note 6
- (L) Denotes Girder designation
- * 1200 at Pier E22L
- ** Thickened Diaphragm between two outside access openings

Notes:

1. For construction of the hinge assembly, see "Construction Sequence at Hinge E" sheet.
2. For dimensions not shown, see "Westbound Hinge EW Details No.1" and "Westbound Hinge EW Details No.3".
3. Pipe beams, circular segmented bearings and bearing restraint brackets shown in final positions. Contractor shall install pipe beams, bearings and restraint brackets into final positions. For details of contract work at Hinge EW, see "Construction Sequence at Hinge E" sheet. For Bearing assemblies & grouted into final position, see "Hinge E Bearing Details No. 1 thru 5" sheets.
4. For "a" dimension and Seismic Jt blockout detail, see "Deck Joint Details" sheet.
6. Concrete strength for closure pour shall be same as concrete strength for Bridge superstructure.

MARK	DATE	DESCRIPTIONS	BY	CH'D	CCO#
1	7/21/08	NOTE 5 DELETED	VT	JSK	
2	7/21/08	REVISE UTILITY OPENING LOCATION	VT	JSK	
3	3/20/09	REVISE ACCESS OPENINGS	VT	JSK	

REVISIONS

CONTRACT CHANGE ORDER NO. 86
SHEET 19 OF 35 6/11/09

Note:
The Contractor shall verify all controlling field dimensions before ordering or fabricating any material

ALL DIMENSIONS ARE IN MILLIMETERS UNLESS OTHERWISE SHOWN

DESIGN OVERSIGHT
SAM AKKAD FRANCISCO CARPIO BERNARD CHAN HASAN EL-NATUR
SIGN OFF DATE 4/3/2009
Rev. Date: 5-18-98

	BY	CHECKED
DESIGN	X. Wu	V. Trinh
DETAILS	A. Segura	V. Trinh
QUANTITIES	C. Lin	D. Saretsky

ORIGINAL SCALE IN MILLIMETERS FOR REDUCED PLANS 0 10 20 30 40 50 60 70 80 90 100

PREPARED FOR THE STATE OF CALIFORNIA DEPARTMENT OF TRANSPORTATION

Adam Wang
PROJECT ENGINEER

CU 04
EA 0120L1
TASK ORDER REQUEST

BRIDGE NO. 34-0006L/R
KILOMETER POST 1.6

DISREGARD PRINTS BEARING EARLIER REVISION DATES

SAN FRANCISCO OAKLAND BAY BRIDGE
EAST SPAN SEISMIC SAFETY PROJECT

OAKLAND APPROACH STRUCTURES-PHASE 1

WESTBOUND HINGE EW DETAILS NO.2

REVISION DATES (PRELIMINARY STAGE ONLY) 5/18/05 10/20/05 8/28/06 10/27/06 2/12/06 6/27/06 11/17/06 1/31/06 6/13/06 7/21/06

SHEET 110R3 OF 224

Notes:

1. All transverse diaphragm tendons not shown for clarity. For layouts, see Section K-K and Section L-L on "Westbound Hinge EW Details No. 6" sheet.
2. For Detail J, see "Westbound Hinge EW Details No.10" sheet.
3. Anchorage symbols are as follows:
   - ⊢ Jacking end
   - ▶ Anchorage end
4. See respective prestressing sheets for details of tendons layout.
5. For prestressing notes, see "Westbound Hinge EW Details No. 5" sheet.
6. Add Duct confinement reinf #25 (Tot 2 pairs around P/S duct) in addition to B8-5

min — Provide Welded Head at ends if ≤ 800 min

MARK	DATE	DESCRIPTIONS	BY	CH'D	CCO#
1	3/20/09	REVISE TENDONS LAYOUT	VT	JSK	

REVISIONS

CONTRACT CHANGE ORDER NO. 86
SHEET 20 OF 35 6/11/09

STAMP IS VALID FOR REVISION 1 ONLY

DIST	COUNTY	ROUTE	KILOMETER POST TOTAL PROJECT	SHEET NO.	TOTAL SHEETS
04	Ala	80	1.6/2.7	225R1	643

Adam Wang
REGISTERED ENGINEER - CIVIL
1-29-07
PLANS APPROVAL DATE

The State of California or its officers or agents shall not be responsible for the accuracy or completeness of electronic copies of this plan sheet.

REGISTERED PROFESSIONAL ENGINEER ADAM TH WANG No. 40402 Exp. 3-31-2007 CIVIL STATE OF CALIFORNIA

REGISTERED PROFESSIONAL ENGINEER VINH DIEU TRINH No. 50685 Exp. 9-30-2009 CIVIL STATE OF CALIFORNIA

T.Y. LIN / MOFFATT & NICHOL
TWO HARRISON STREET, SUITE 500
SAN FRANCISCO, CA 94105

W. KOO & ASSOCIATES, INC
625 THE CITY DRIVE SOUTH, SUITE 200
ORANGE, CA 92868

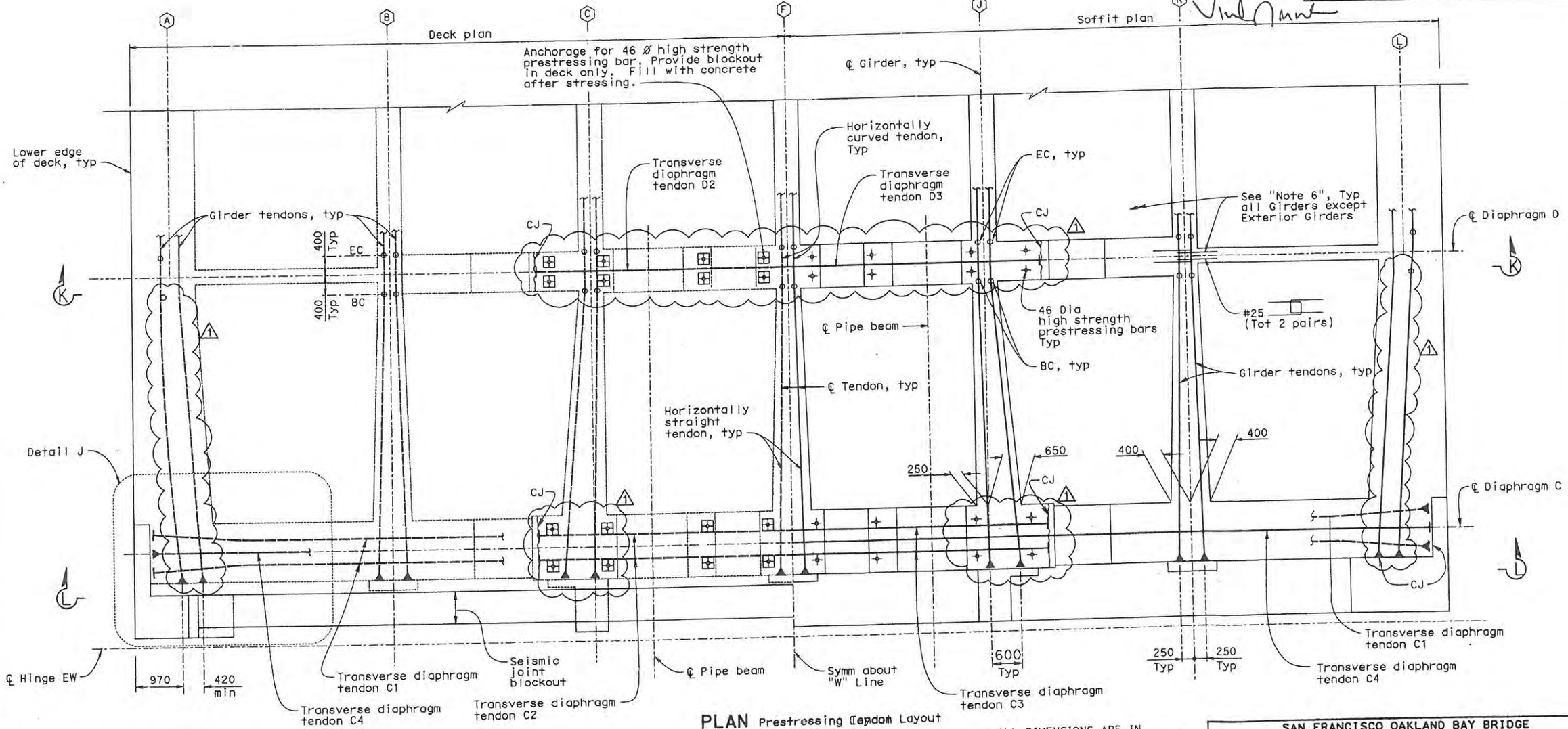

PLAN Prestressing Tendon Layout
1:40

Note:
The Contractor shall verify all controlling field dimensions before ordering or fabricating any material

ALL DIMENSIONS ARE IN MILLIMETERS UNLESS OTHERWISE SHOWN

SAN FRANCISCO OAKLAND BAY BRIDGE
EAST SPAN SEISMIC SAFETY PROJECT

OAKLAND APPROACH STRUCTURES-PHASE 1

WESTBOUND HINGE EW DETAILS NO.4

DESIGN OVERSIGHT
SAM AKKAD FRANCISCO CARPIO BERNARD CHAN HASAN EL-NATUR
4/3/2009
SIGN OFF DATE

	BY	CHECKED
DESIGN	X. Wu	V. Trinh
DETAILS	A. Segura	V. Trinh
QUANTITIES	C. Lin	D. Saretsky

PREPARED FOR THE STATE OF CALIFORNIA DEPARTMENT OF TRANSPORTATION

Adam Wang
PROJECT ENGINEER

CU 04
EA 0120L1

BRIDGE NO. 34-0006L/R
KILOMETER POST 1.6

DISREGARD PRINTS BEARING EARLIER REVISION DATES

REVISION DATES (PRELIMINARY STAGE ONLY) 5/28/03 10/28/03 8/28/04 10/28/04 2/28/05 5/28/05 11/28/05 1/28/06 4/28/06 7/28/06

SHEET 112R1 OF 224

ORIGINAL SCALE IN MILLIMETERS FOR REDUCED PLANS 0 10 20 30 40 50 60 70 80 90 100

Rev. Octer 5-18-98

FILENAME => $F1
DATE PLOTTED => $DATE$
TIME PLOTTED => $TIME$

r 3, 2009

DIST	COUNTY	ROUTE	KILOMETER POST TOTAL PROJECT	SHEET NO.	TOTAL SHEETS
04	Ala	80	1.6/2.7	227R2	643

Caltrans Metric

Adam Wang
REGISTERED ENGINEER - CIVIL
1-29-07
PLANS APPROVAL DATE

REGISTERED PROFESSIONAL ENGINEER ADAM TN WANG No. 40402 Exp. 3-31-2007 CIVIL STATE OF CALIFORNIA

The State of California or its officers or agents shall not be responsible for the accuracy or completeness of electronic copies of this plan sheet.

T.Y. LIN / MOFFATT & NICHOL
TWO HARRISON STREET, SUITE 500
SAN FRANCISCO, CA 94105

W. KOO & ASSOCIATES, INC
625 THE CITY DRIVE SOUTH, SUITE 200
ORANGE, CA 92868

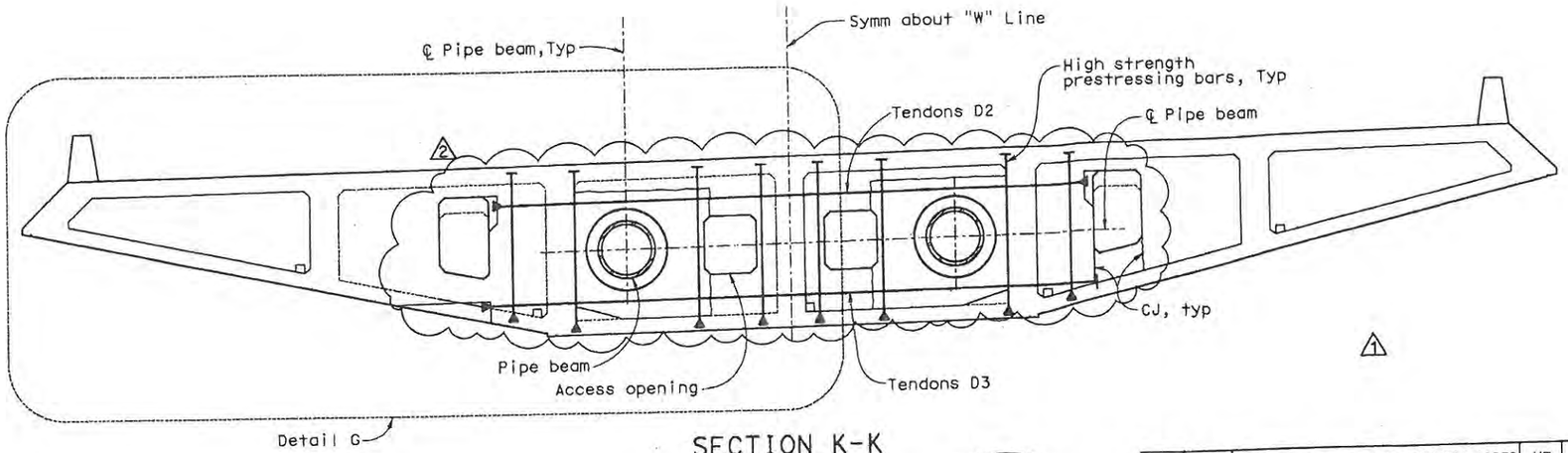

SECTION K-K
1:50

Diaphragm	Tendon	No. of tendon * × No. of strands	Pjack = Jacking force per tendon (kN)
C	C1	2x16	3130
	C2	2x20	3910
	C3	2x18	3520
	C4	1x27	5280
D	D2	1x18	3520
	D3	1x18	3520

* per diaphragm

MARK	DATE	DESCRIPTIONS	BY	CH'D	CCO#
1	7/21/08	ALTERNATE STRESSING OPTIONS ADDED	VT	JSK	
2	3/20/09	REVISE TENDONS DETAILS	VT	JSK	

REVISIONS

REGISTERED PROFESSIONAL ENGINEER VINH DIEU TRINH No. 50685 Exp. 9-30-2009 CIVIL STATE OF CALIFORNIA

STAMP IS VALID FOR REVISION 2 ONLY

CONTRACT CHANGE ORDER NO. 86
SHEET 21 OF 35 6/11/09

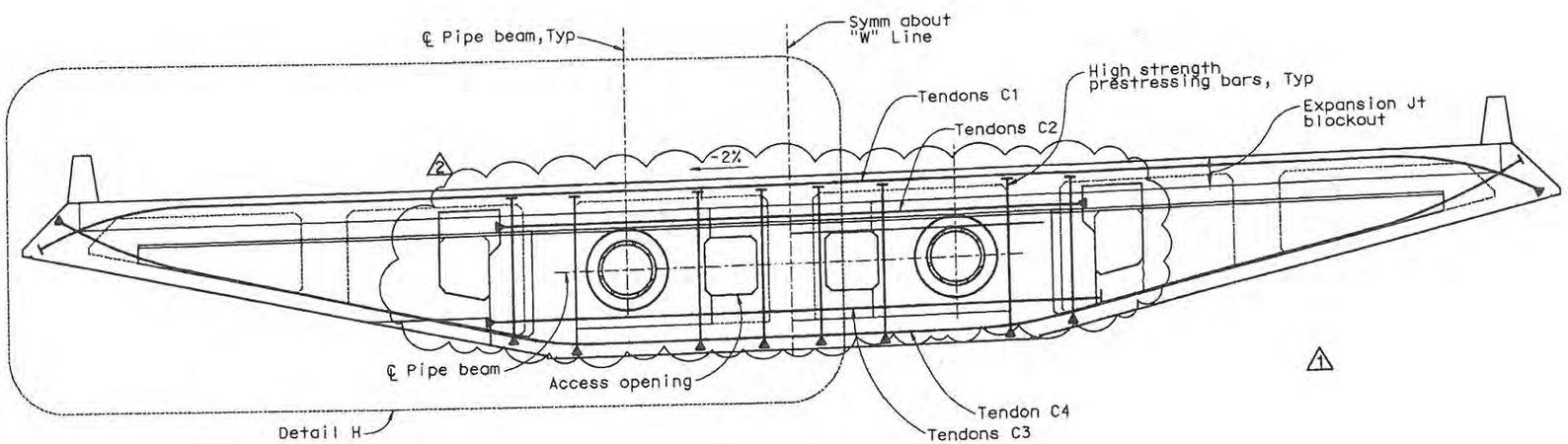

SECTION L-L
1:50

NOTES:

1. For Details G and H, see "Westbound Hinge EW Details No. 7" and "Westbound Hinge EW Details No. 8" sheets.
2. Anchorage symbols are as follows:
   - ⊢ Jacking end
   - ⊢► Anchorage end
3. For prestressing notes, see "Westbound Hinge EW Details No. 5" sheet.

Note:
The Contractor shall verify all controlling field dimensions before ordering or fabricating any material

ALL DIMENSIONS ARE IN MILLIMETERS UNLESS OTHERWISE SHOWN

SAN FRANCISCO OAKLAND BAY BRIDGE
EAST SPAN SEISMIC SAFETY PROJECT

OAKLAND APPROACH STRUCTURES-PHASE 1

WESTBOUND HINGE EW DETAILS NO.6

DESIGN OVERSIGHT
SAM AKKAD FRANCISCO CARPIO BERNARD CHAN HASAN EL-NATUR
SIGN OFF DATE 4/3/2009

	BY	CHECKED
DESIGN	X. Wu	V. Trinh
DETAILS	A. Segura	V. Trinh
QUANTITIES	C. Lin	D. Saretsky

PREPARED FOR THE STATE OF CALIFORNIA DEPARTMENT OF TRANSPORTATION

Adam Wang
PROJECT ENGINEER

BRIDGE NO. 34-0006L/R
KILOMETER POST 1.6

CU 04
EA 0120L1

DISREGARD PRINTS BEARING EARLIER REVISION DATES

REVISION DATES (PRELIMINARY STAGE ONLY)

SHEET 114R2 OF 224

ORIGINAL SCALE IN MILLIMETERS FOR REDUCED PLANS 0 10 20 30 40 50 60 70 80 90 100

Rev. Date: 5-18-98

DIST	COUNTY	ROUTE	KILOMETER POST TOTAL PROJECT	SHEET NO.	TOTAL SHEETS
04	Ala	80	1.6/2.7	228R2	643

Caltrans Metric

Adam Wang
REGISTERED ENGINEER - CIVIL
1-29-07
PLANS APPROVAL DATE

REGISTERED PROFESSIONAL ENGINEER ADAM TN WANG No. 40402 Exp. 3-31-2007 CIVIL STATE OF CALIFORNIA

The State of California or its officers or agents shall not be responsible for the accuracy or completeness of electronic copies of this plan sheet.

T.Y. LIN / MOFFATT & NICHOL
TWO HARRISON STREET, SUITE 500
SAN FRANCISCO, CA 94105

W. KOO & ASSOCIATES, INC
625 THE CITY DRIVE SOUTH, SUITE 200
ORANGE, CA 92868

REGISTERED PROFESSIONAL ENGINEER VINH DIEU TRINH No. 50685 Exp. 9-30-2009 CIVIL STATE OF CALIFORNIA

STAMP IS VALID FOR REVISION 2 ONLY

MARK	DATE	DESCRIPTIONS	BY	CH'D	CCO#
1	7/21/08	ALTERNATE STRESSING OPTION NOTE ADDED	VT	JSK	
2	3/20/09	REVISE TENDON DETAILS	VT	JSK	

REVISIONS

CONTRACT CHANGE ORDER NO. 86
SHEET 22 OF 35 6/11/09

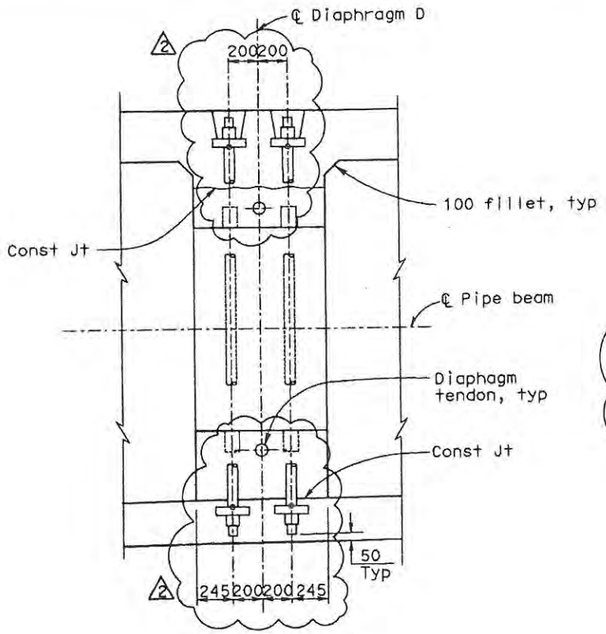

SECTION P-P
1:20

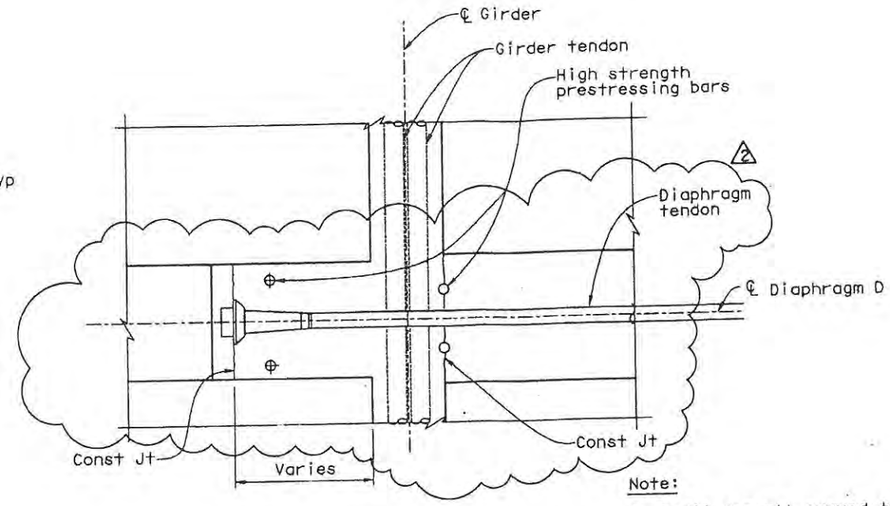

SECTION Q-Q
1:20

Note:
1. Radii for all curved tendons are 6000 Min unless shown otherwise.

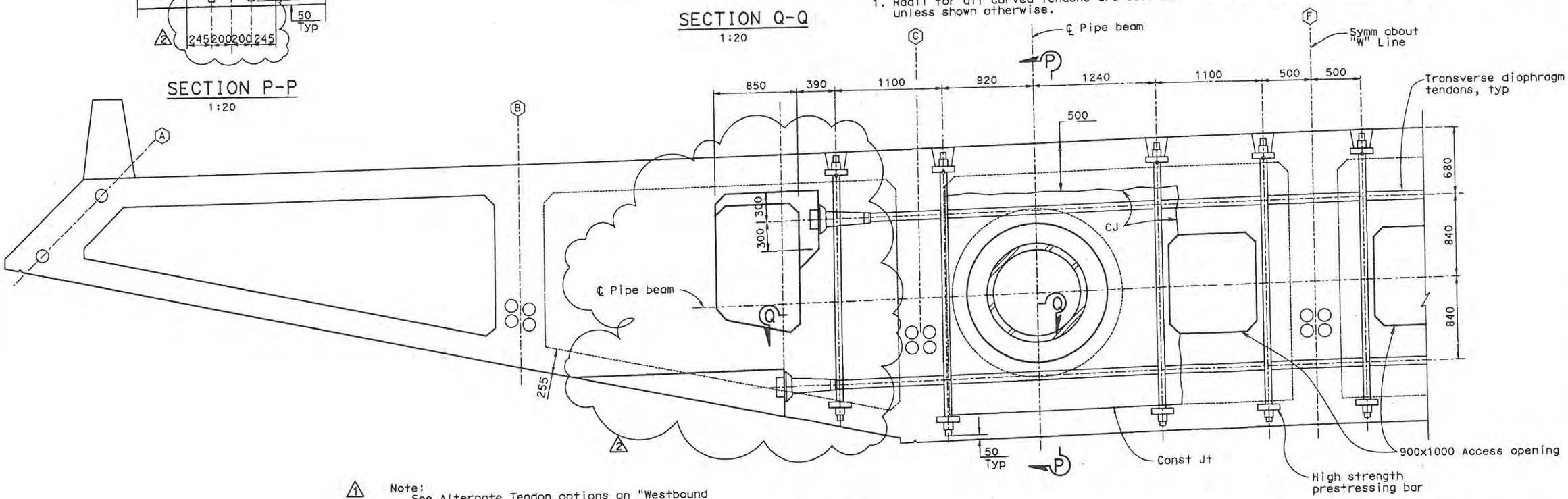

1 Note:
See Alternate Tendon options on "Westbound Hinge EW Details No. 6" sheet

DETAIL G
1:20

Note:
The Contractor shall verify all controlling field dimensions before ordering or fabricating any material

ALL DIMENSIONS ARE IN MILLIMETERS UNLESS OTHERWISE SHOWN

DESIGN OVERSIGHT
SAM AKKAD FRANCISCO CARPIO BERNARD CHAN HASAN EL-NATUR
SIGN OFF DATE 4/3/2009
Rev. Date: 5-18-98

DESIGN	BY X. Wu	CHECKED V. Trinh	
DETAILS	BY A. Segura	CHECKED V. Trinh	
QUANTITIES	BY C. Lin	CHECKED D. Saretsky	

ORIGINAL SCALE IN MILLIMETERS FOR REDUCED PLANS 0 10 20 30 40 50 60 70 80 90 100

PREPARED FOR THE STATE OF CALIFORNIA DEPARTMENT OF TRANSPORTATION

Adam Wang
PROJECT ENGINEER

CU 04
EA 0120L1

BRIDGE NO. 34-0006L/R
KILOMETER POST 1.6

SAN FRANCISCO OAKLAND BAY BRIDGE
EAST SPAN SEISMIC SAFETY PROJECT

OAKLAND APPROACH STRUCTURES-PHASE 1

WESTBOUND HINGE EW DETAILS NO.7

DISREGARD PRINTS BEARING EARLIER REVISION DATES

REVISION DATES (PRELIMINARY STAGE ONLY) 5/18/03 10/20/03 8/20/04 10/29/04 2/14/05 8/24/05 11/14/05 1/31/06 4/3/06 7/21/06

SHEET 115R2 OF 224

DIST	COUNTY	ROUTE	KILOMETER POST TOTAL PROJECT	SHEET NO.	TOTAL SHEETS
04	Ala	80	1.6/2.7	229R2	643

Caltrans Metric

Adam Wang
REGISTERED ENGINEER - CIVIL

1-29-07
PLANS APPROVAL DATE

REGISTERED PROFESSIONAL ENGINEER ADAM TM WANG No. 40402 Exp. 3-31-2007 CIVIL STATE OF CALIFORNIA

The State of California or its officers or agents shall not be responsible for the accuracy or completeness of electronic copies of this plan sheet.

T.Y. LIN / MOFFATT & NICHOL
TWO HARRISON STREET, SUITE 500
SAN FRANCISCO, CA 94105

W. KOO & ASSOCIATES, INC
625 THE CITY DRIVE SOUTH, SUITE 200
ORANGE, CA 92868

REGISTERED PROFESSIONAL ENGINEER VINH DIEU TRINH No. 50685 Exp. 9-30-2009 CIVIL STATE OF CALIFORNIA

STAMP IS VALID FOR REVISION 2 ONLY

MARK	DATE	DESCRIPTIONS	BY	CH'D	CCO#
1	7/21/08	ALTERNATE STRESSING OPTION NOTE ADDED	VT	JSK	
2	3/20/09	REVISE TENDON DETAILS	VT	JSK	

REVISIONS

CONTRACT CHANGE ORDER NO. 86
SHEET 23 OF 35 6/11/09

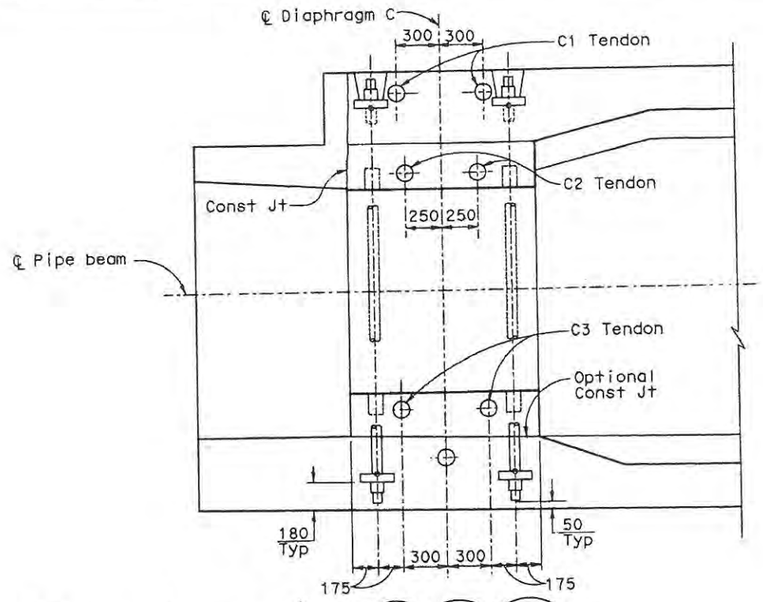

SECTION R-R
1:20

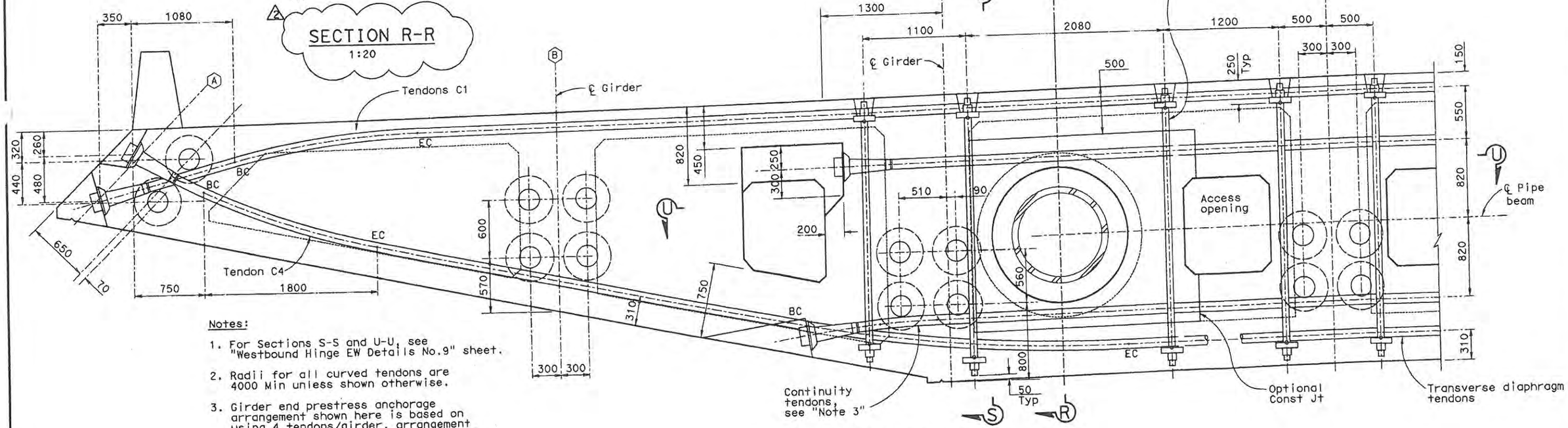

Note:
See Alternate Tendon options on "Westbound Hinge EW Details No. 6" sheet

Notes:

1. For Sections S-S and U-U, see "Westbound Hinge EW Details No.9" sheet.
2. Radii for all curved tendons are 4000 Min unless shown otherwise.
3. Girder end prestress anchorage arrangement shown here is based on using 4 tendons/girder, arrangement using other tendon layout is similar.

DETAIL H
1:20

ALL DIMENSIONS ARE IN MILLIMETERS UNLESS OTHERWISE SHOWN

Note:
The Contractor shall verify all controlling field dimensions before ordering or fabricating any material

DESIGN OVERSIGHT
SAM AKKAD FRANCISCO CARPIO BERNARD CHAN HASAN BC-NATUR
4/3/2009
SIGN OFF DATE

DESIGN	BY X. Wu	CHECKED V. Trinh	
DETAILS	BY A. Segura	CHECKED V. Trinh	
QUANTITIES	BY C. Lin	CHECKED D. Saretsky	

PREPARED FOR THE STATE OF CALIFORNIA DEPARTMENT OF TRANSPORTATION

Adam Wang
PROJECT ENGINEER

BRIDGE NO. 34-0006L/R
KILOMETER POST 1.6

SAN FRANCISCO OAKLAND BAY BRIDGE
EAST SPAN SEISMIC SAFETY PROJECT

OAKLAND APPROACH STRUCTURES-PHASE 1

WESTBOUND HINGE EW DETAILS NO.8

CU 04
EA 0120L1

DISREGARD PRINTS BEARING EARLIER REVISION DATES

REVISION DATES (PRELIMINARY STAGE ONLY) 5/28/03 10/30/03 8/20/04 10/27/04 2/17/05 6/24/05 11/14/05 1/31/06 4/27/06 7/28/06

SHEET 116R2 OF 224

ORIGINAL SCALE IN MILLIMETERS FOR REDUCED PLANS 0 10 20 30 40 50 60 70 80 90 100

Rev. Date: 5-18-98

TITLE - 1 SPACE

PLOT SCALE - 1 SPACE

PLOT DATE - 1 SPACE

r 3, 2009

DIST	COUNTY	ROUTE	KILOMETER POST TOTAL PROJECT	SHEET NO.	TOTAL SHEETS
04	Ala	80	1.6/2.7	232R2	643

Caltrans Metric

Adam Wang
REGISTERED ENGINEER - CIVIL
1-29-07
PLANS APPROVAL DATE

REGISTERED PROFESSIONAL ENGINEER ADAM TN WANG No. 40402 Exp. 3-31-2009 CIVIL STATE OF CALIFORNIA

The State of California or its officers or agents shall not be responsible for the accuracy or completeness of electronic copies of this plan sheet.

T.Y. LIN / MOFFATT & NICHOL
TWO HARRISON STREET, SUITE 500
SAN FRANCISCO, CA 94105

W. KOO & ASSOCIATES, INC
625 THE CITY DRIVE SOUTH, SUITE 200
ORANGE, CA 92868

Notes:

1. For additional reinforcement, see "Westbound Hinge EW Details No.12" sheet.
2. Adjust reinforcement to clear prestressing tendons.
3. For Section b-b, Section c-c and Section e-e, see "Westbound Hinge EW Details No.16" sheet.
4. For "Section d-d", see "Westbound Hinge EW Details No.15" sheet.
5. Epoxy coat reinforcement for Diaphragm C shown on this sheet.
6. Adjust headed reinforcement to clear prestressing bars.
7. Longitudinal girder P/S duct shown for 4 ducts @ interior girders. P/S ducts & reinf for other layout are similar except where there are no ducts interference, diaphragm reinf should be made continuously.
8. Other reinf are not shown for clarity.
9. Electrical conduits shown for reference only. For actual locations & No. of conduits, see "Electrical Plans".
10. 81 mm clr shall be maintained for longitudinal reinf top layer of deck rebar and headed bars after deck ground off for seismic jt. Bend longitudinal reinf as required.
11. See Note 10 on "Westbound Hinge FW Details No. 2" sheet.

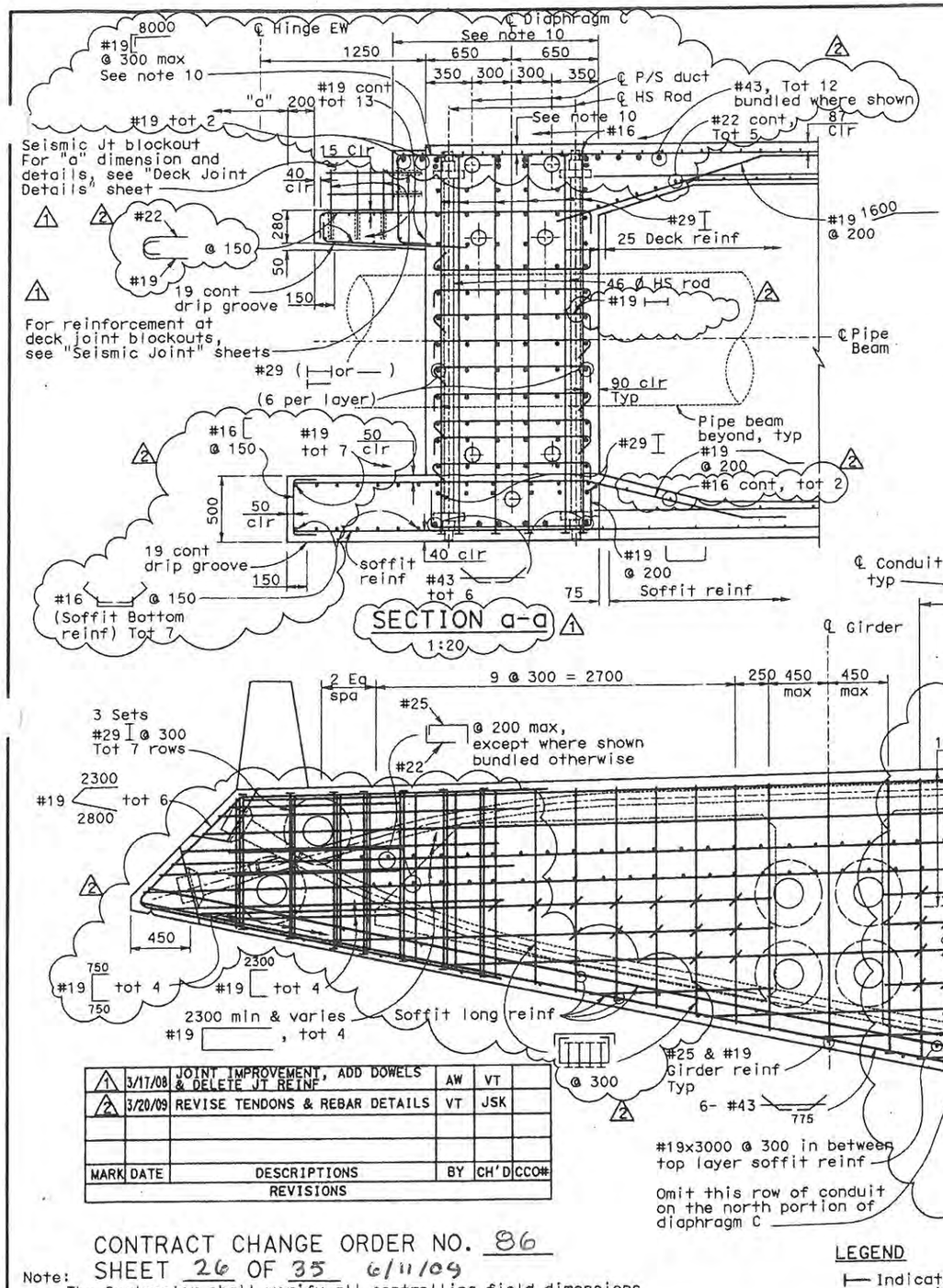

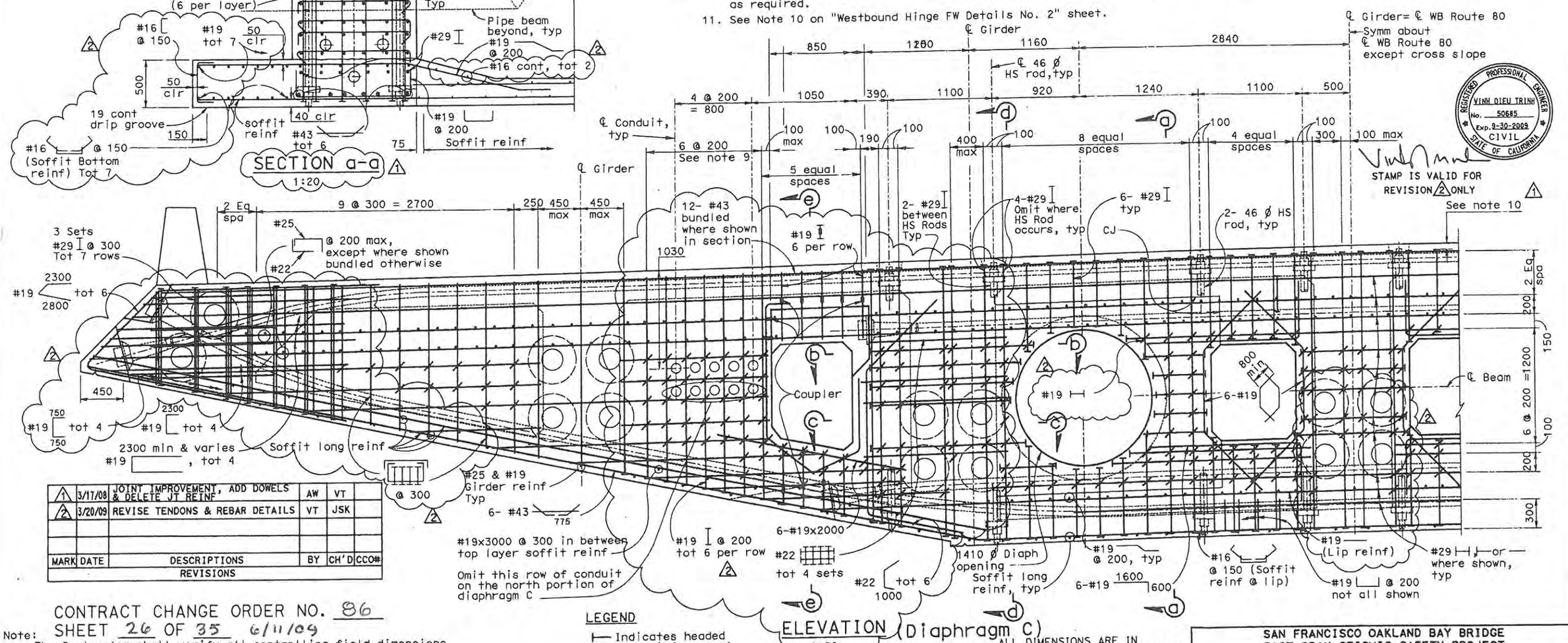

MARK	DATE	DESCRIPTIONS	BY	CH'D	CCO#
1	3/17/08	JOINT IMPROVEMENT, ADD DOWELS & DELETE JT REINF	AW	VT	
2	3/20/09	REVISE TENDONS & REBAR DETAILS	VT	JSK	

REVISIONS

LEGEND

⊢ Indicates headed bar reinforcement

ALL DIMENSIONS ARE IN MILLIMETERS UNLESS OTHERWISE SHOWN

CONTRACT CHANGE ORDER NO. 86

Note: SHEET 26 OF 35 6/11/09

The Contractor shall verify all controlling field dimensions before ordering or fabricating any material

DESIGN OVERSIGHT
SAM AKKAO FRANCISCO CARPIO BERNARD CHAN HASAN EL-MATUR
4/3/2009
SIGN OFF DATE

	BY	CHECKED
DESIGN	X. Wu	V. Trinh
DETAILS	A. Segura	V. Trinh
QUANTITIES	C. Lin	D. Saretsky

PREPARED FOR THE STATE OF CALIFORNIA DEPARTMENT OF TRANSPORTATION

Adam Wang
PROJECT ENGINEER

CU 04
EA 0120L1

BRIDGE NO. 34-0006L/R
KILOMETER POST 1.6

DISREGARD PRINTS BEARING EARLIER REVISION DATES

SAN FRANCISCO OAKLAND BAY BRIDGE
EAST SPAN SEISMIC SAFETY PROJECT

OAKLAND APPROACH STRUCTURES-PHASE 1

WESTBOUND HINGE EW DETAILS NO.11

REVISION DATES (PRELIMINARY STAGE ONLY) 5/18/03 10/28/03 4/28/04 10/28/04 2/28/05 5/24/05 11/24/05 1/31/06 4/13/06 7/28/06

SHEET 119R2 OF 224

ORIGINAL SCALE IN MILLIMETERS FOR REDUCED PLANS 0 10 20 30 40 50 60 70 80 90 100

Rev. Date: 5-18-98

pr 3,2009

DIST	COUNTY	ROUTE	KILOMETER POST TOTAL PROJECT	SHEET NO.	TOTAL SHEETS
04	Ala	80	1.6/2.7	233R1	643

REGISTERED ENGINEER - CIVIL

1-29-07

PLANS APPROVAL DATE

The State of California or its officers or agents shall not be responsible for the accuracy or completeness of electronic copies of this plan sheet.

REGISTERED PROFESSIONAL ENGINEER ADAM TH WANG No. 40402 Exp. 3-31-2007 CIVIL STATE OF CALIFORNIA

T.Y. LIN / MOFFATT & NICHOL
TWO HARRISON STREET, SUITE 500
SAN FRANCISCO, CA 94105

W. KOO & ASSOCIATES, INC
625 THE CITY DRIVE SOUTH, SUITE 200
ORANGE, CA 92868

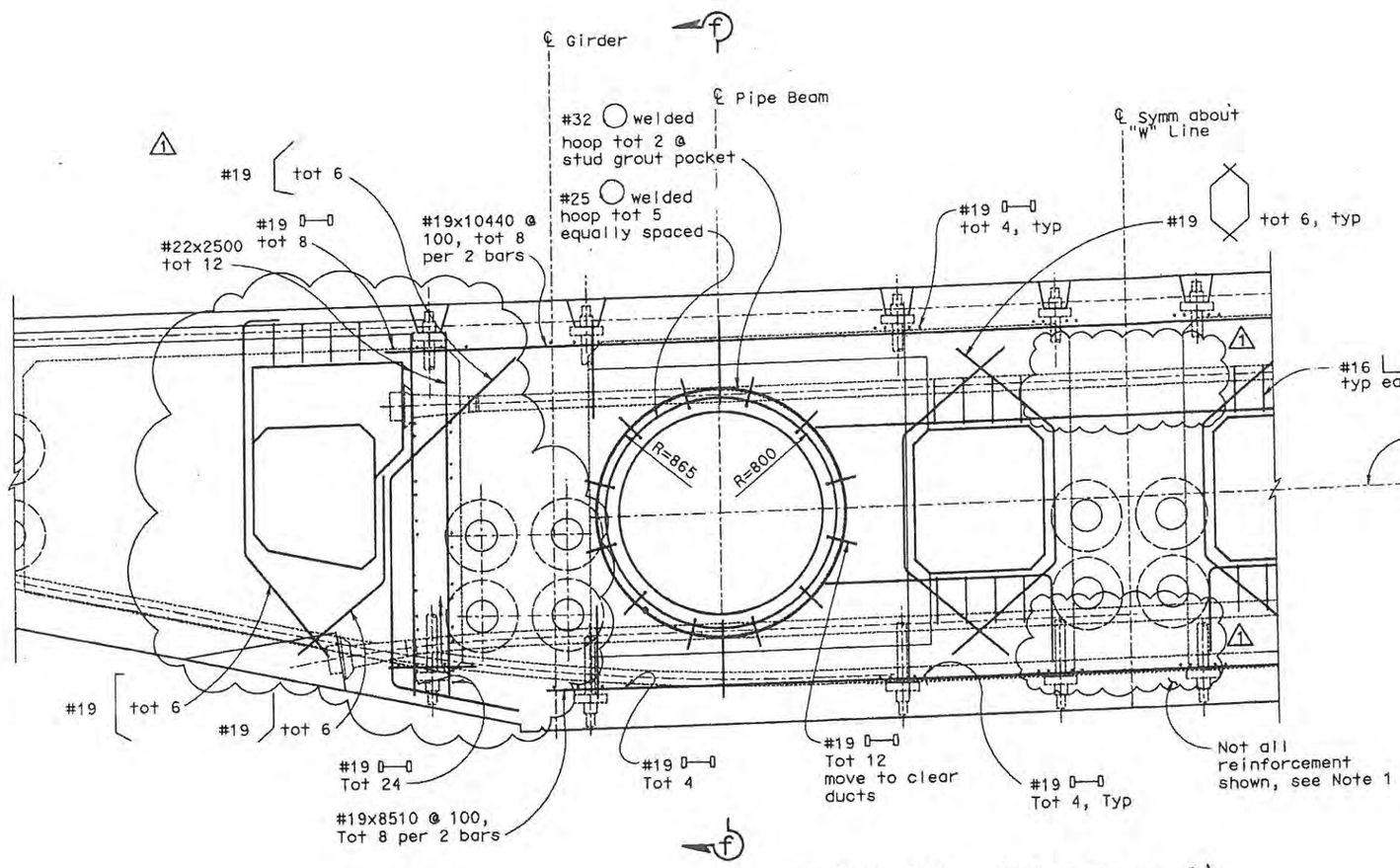

ELEVATION (Diaphragm C)
1:20

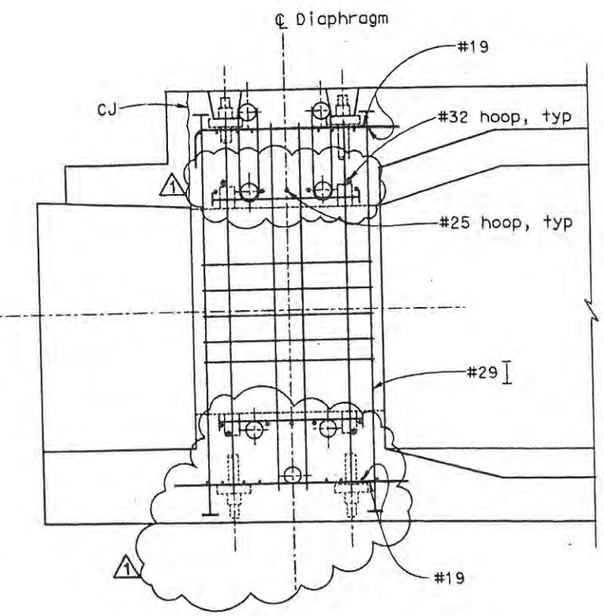

SECTION f-f
1:20

MARK	DATE	DESCRIPTIONS	BY	CH'D	CCO#
1	3/20/09	REVISE TENDONS DETAILS	VT	JSK	

REVISIONS

CONTRACT CHANGE ORDER NO. 86
SHEET 27 OF 35 6/11/09

REGISTERED PROFESSIONAL ENGINEER VINH DIEU TRINH No. 50685 Exp. 9-30-2009 CIVIL STATE OF CALIFORNIA

STAMP IS VALID FOR REVISION 1 ONLY

Notes:

1. For additional reinforcement, see "Westbound Hinge EW Details No.11" sheet.
2. Adjust reinforcement to clear prestressing tendons.
3. Epoxy coat reinforcement for Diaphragm C shown on this sheet.

LEGEND

⊢ Indicates headed bar reinforcement

Note:
The Contractor shall verify all controlling field dimensions before ordering or fabricating any material

ALL DIMENSIONS ARE IN MILLIMETERS UNLESS OTHERWISE SHOWN

SAN FRANCISCO OAKLAND BAY BRIDGE
EAST SPAN SEISMIC SAFETY PROJECT

OAKLAND APPROACH STRUCTURES-PHASE 1

WESTBOUND HINGE EW DETAILS NO.12

DESIGN OVERSIGHT: SAM AKKAD, FRANCISCO CARPIO, BERNARD CHAN, HASAN EL-NATUR
SIGN OFF DATE 4/3/2009

	BY	CHECKED
DESIGN	X. Wu	V. Trinh
DETAILS	A. Segura	V. Trinh
QUANTITIES	C. Lin	D. Saretsky

PREPARED FOR THE STATE OF CALIFORNIA DEPARTMENT OF TRANSPORTATION

Adam Wang
PROJECT ENGINEER

CU 04
EA 0120L1

BRIDGE NO. 34-0006L/R
KILOMETER POST 1.6

DISREGARD PRINTS BEARING EARLIER REVISION DATES

REVISION DATES (PRELIMINARY STAGE ONLY): 5/13/03 10/30/03 6/28/04 10/22/04 2/28/05 6/24/05 11/21/05 1/13/06 4/13/06 7/18/06

SHEET 120R1 OF 224

ORIGINAL SCALE IN MILLIMETERS FOR REDUCED PLANS 0 10 20 30 40 50 60 70 80 90 100

Rev. Date: 5-18-98

pr 3, 2009

DIST	COUNTY	ROUTE	KILOMETER POST TOTAL PROJECT	SHEET NO.	TOTAL SHEETS
04	Ala	80	1.6/2.7	234R1	643

Caltrans Metric

Adam Wang
REGISTERED ENGINEER - CIVIL
1-29-07
PLANS APPROVAL DATE

REGISTERED PROFESSIONAL ENGINEER ADAM TH WANG No. 40402 Exp. 3-31-2007 CIVIL STATE OF CALIFORNIA

The State of California or its officers or agents shall not be responsible for the accuracy or completeness of electronic copies of this plan sheet.

T.Y. LIN / MOFFATT & NICHOL
TWO HARRISON STREET, SUITE 500
SAN FRANCISCO, CA 94105

W. KOO & ASSOCIATES, INC
625 THE CITY DRIVE SOUTH, SUITE 200
ORANGE, CA 92868

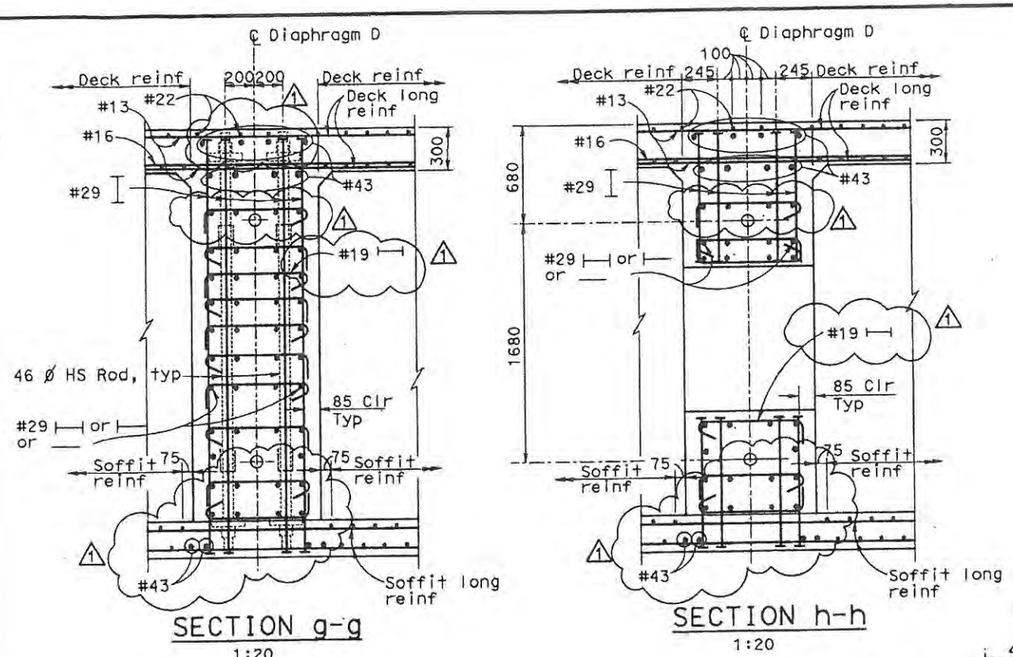

SECTION g-g
1:20

SECTION h-h
1:20

Notes:

1. For reinforcement at anchorages, see "Westbound Hinge EW Details No.14" sheet.
2. Adjust reinforcement to clear prestressing tendons.
3. For Section j-j & Section k-k, see "Westbound Hinge EW Details No.16" sheet.
4. Epoxy coat reinforcement for Diaphragm D shown on this sheet.
5. Adjust headed reinforcement to clear prestressing bars.
6. Longitudinal girder P/S duct shown from 4 ducts @ interior girders. P/S & reinf for 6 ducts layout are similar except where there are no ducts interference, reinf should be made continuously.
7. Other reinf are not shown for clarity.
8. Electrical conduits shown for reference only, actual locations & No. of conduits, see "Electrical Plans".

MARK	DATE	DESCRIPTIONS	BY	CH'D	CCO#
1	3/20/09	REVISE TENDON AND REBAR DETAILS	VT	JSK	
		REVISIONS			

CONTRACT CHANGE ORDER NO. 86
SHEET 28 OF 35
6/11/09

REGISTERED PROFESSIONAL ENGINEER VINH DIEU TRINH No. 50685 Exp. 9-30-2009 CIVIL STATE OF CALIFORNIA

STAMP IS VALID FOR REVISION 1 ONLY

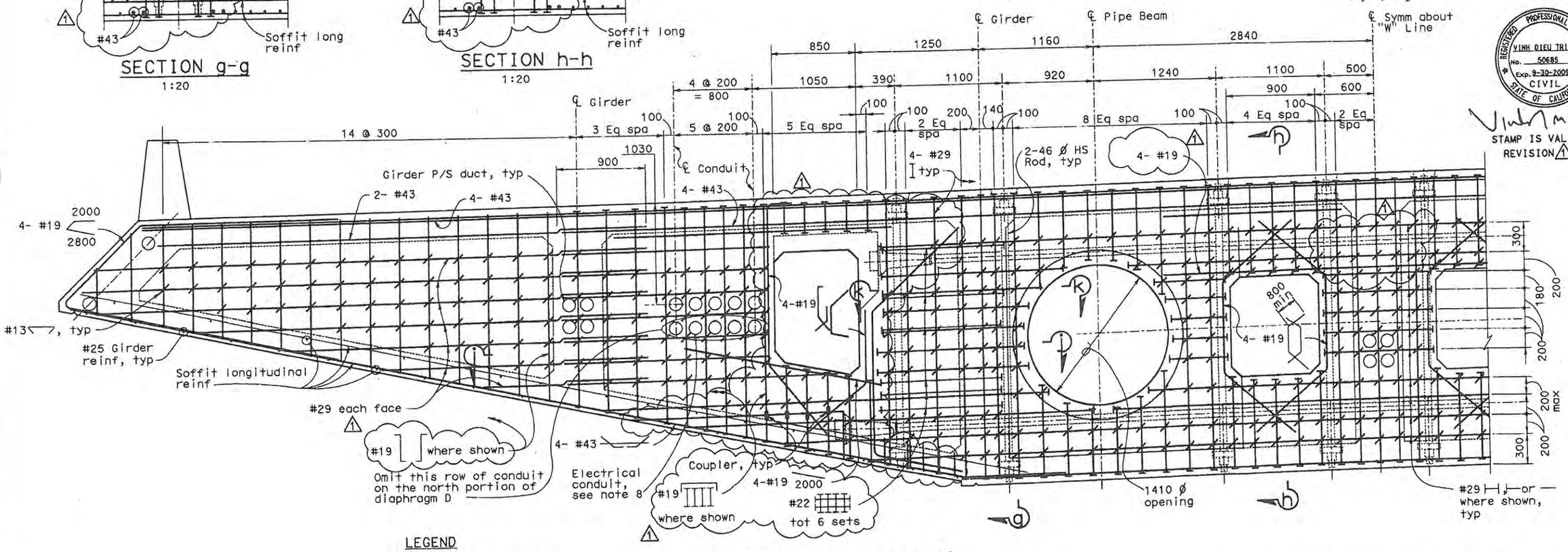

LEGEND

⊢ Indicates headed bar reinforcement

ELEVATION (Diaphragm D)
1:20

Note:
The Contractor shall verify all controlling field dimensions before ordering or fabricating any material

ALL DIMENSIONS ARE IN MILLIMETERS UNLESS OTHERWISE SHOWN

SAN FRANCISCO OAKLAND BAY BRIDGE
EAST SPAN SEISMIC SAFETY PROJECT

OAKLAND APPROACH STRUCTURES-PHASE 1

WESTBOUND HINGE EW DETAILS NO.13

DESIGN OVERSIGHT
SAM AKKAD FRANCISCO CARPIO BERNARD CHAN HASAN EL-NATUR
SIGN OFF DATE 4/3/2009

	BY	CHECKED
DESIGN	X. Wu	V. Trinh
DETAILS	A. Segura	V. Trinh
QUANTITIES	C. Lin	D. Saretsky

PREPARED FOR THE STATE OF CALIFORNIA DEPARTMENT OF TRANSPORTATION

Adam Wang
PROJECT ENGINEER

CU 04
EA 0120L1

BRIDGE NO. 34-0006L/R
KILOMETER POST 1.6

DISREGARD PRINTS BEARING EARLIER REVISION DATES

REVISION DATES (PRELIMINARY STAGE ONLY) 5/18/03 10/20/03 8/20/04 10/29/04 2/14/05 5/24/05 11/14/05 1/31/06 5/12/06 7/28/06

SHEET 121R1 OF 224

ORIGINAL SCALE IN MILLIMETERS FOR REDUCED PLANS 0 10 20 30 40 50 60 70 80 90 100

Rev. Date: 5-18-98

pr 3, 2009

DIST	COUNTY	ROUTE	KILOMETER POST TOTAL PROJECT	SHEET NO.	TOTAL SHEETS
04	Ala	80	1.6/2.7	235R1	643

Caltrans Metric

Adam Wang
REGISTERED ENGINEER - CIVIL

1-29-07
PLANS APPROVAL DATE

REGISTERED PROFESSIONAL ENGINEER ADAM TH WANG No. 40402 Exp. 3-31-2007 CIVIL STATE OF CALIFORNIA

The State of California or its officers or agents shall not be responsible for the accuracy or completeness of electronic copies of this plan sheet.

T.Y. LIN / MOFFATT & NICHOL
TWO HARRISON STREET, SUITE 500
SAN FRANCISCO, CA 94105

W. KOO & ASSOCIATES, INC
625 THE CITY DRIVE SOUTH, SUITE 200
ORANGE, CA 92868

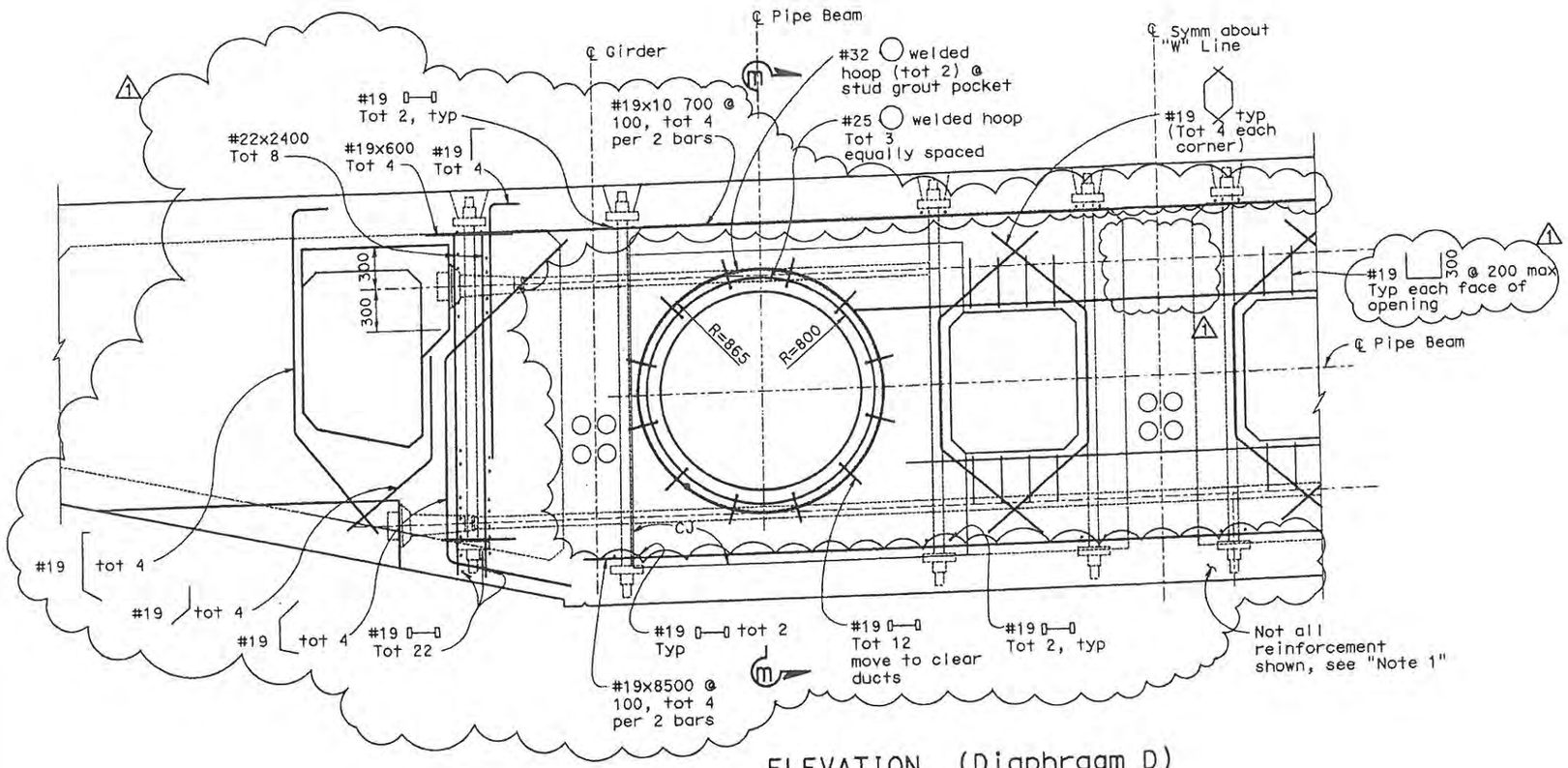

ELEVATION (Diaphragm D)
1:20

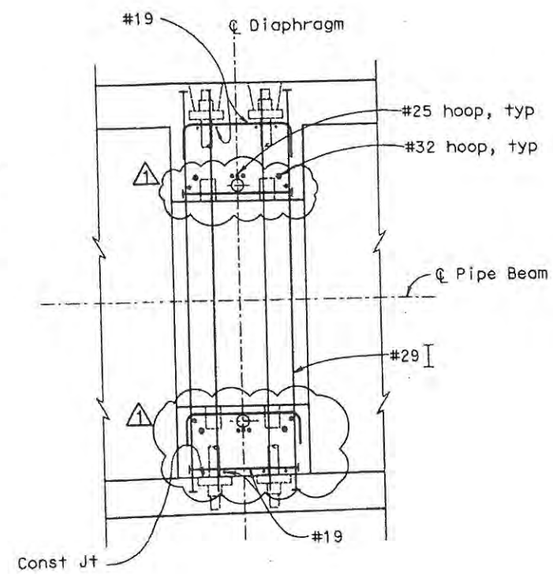

SECTION m-m
1:20

MARK	DATE	DESCRIPTIONS	BY	CH'D	CCO#
1	3/20/09	REVISE TENDONS & REBAR DETAILS	VT	YJS	

REVISIONS

CONTRACT CHANGE ORDER NO. 86
SHEET 29 OF 35 6/11/09

REGISTERED PROFESSIONAL ENGINEER VINH DIEU TRINH No. 50685 Exp. 9-30-2009 CIVIL STATE OF CALIFORNIA

STAMP IS VALID FOR REVISION 1 ONLY

Notes:
1. For additional reinforcement, see "Westbound Hinge EW Details No.13" sheet.
2. Adjust reinforcement to clear prestressing tendons.
3. Epoxy coat reinforcement for Diaphragm D shown on this sheet.

LEGEND
⊢ Indicates headed bar reinforcement

Note:
The Contractor shall verify all controlling field dimensions before ordering or fabricating any material

ALL DIMENSIONS ARE IN MILLIMETERS UNLESS OTHERWISE SHOWN

SAN FRANCISCO OAKLAND BAY BRIDGE
EAST SPAN SEISMIC SAFETY PROJECT

OAKLAND APPROACH STRUCTURES-PHASE 1

WESTBOUND HINGE EW DETAILS NO.14

DESIGN OVERSIGHT
SAM AKKAD FRANCISCO CARPIO BERNARD CHAN HASAN EL-NATUR
SIGN OFF DATE 4/3/2009

	BY	CHECKED
DESIGN	X. Wu	V. Trinh
DETAILS	A. Segura	V. Trinh
QUANTITIES	C. Lin	D. Saretsky

PREPARED FOR THE STATE OF CALIFORNIA DEPARTMENT OF TRANSPORTATION

Adam Wang
PROJECT ENGINEER

CU 04
EA 0120L1

BRIDGE NO. 34-0006L/R
KILOMETER POST 1.6

DISREGARD PRINTS BEARING EARLIER REVISION DATES

REVISION DATES (PRELIMINARY STAGE ONLY) 5/13/03 10/24/03 4/28/04 10/28/04 2/28/05 6/24/05 11/14/05 1/20/06 4/17/06 7/21/06

SHEET 22R1 OF 224

ORIGINAL SCALE IN MILLIMETERS FOR REDUCED PLANS 0 10 20 30 40 50 60 70 80 90 100

Rev. Date: 5-18-98

pr 3, 2009

DIST	COUNTY	ROUTE	KILOMETER POST TOTAL PROJECT	SHEET NO.	TOTAL SHEETS
04	Ala	80	1.6/2.7	236R2	643

Caltrans Metric

Adam Wang
REGISTERED ENGINEER - CIVIL

1-29-07
PLANS APPROVAL DATE

REGISTERED PROFESSIONAL ENGINEER ADAM TW WANG No. 40402 Exp. 3-31-2009 CIVIL STATE OF CALIFORNIA

The State of California or its officers or agents shall not be responsible for the accuracy or completeness of electronic copies of this plan sheet.

T.Y. LIN / MOFFATT & NICHOL
TWO HARRISON STREET, SUITE 500
SAN FRANCISCO, CA 94105

W. KOO & ASSOCIATES, INC
625 THE CITY DRIVE SOUTH, SUITE 200
ORANGE, CA 92868

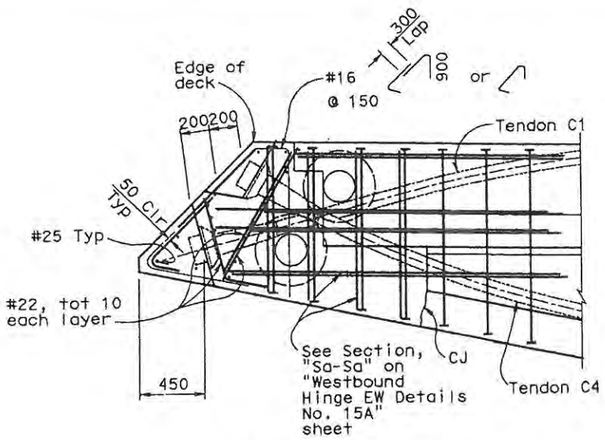

SECTION s-s
1:20

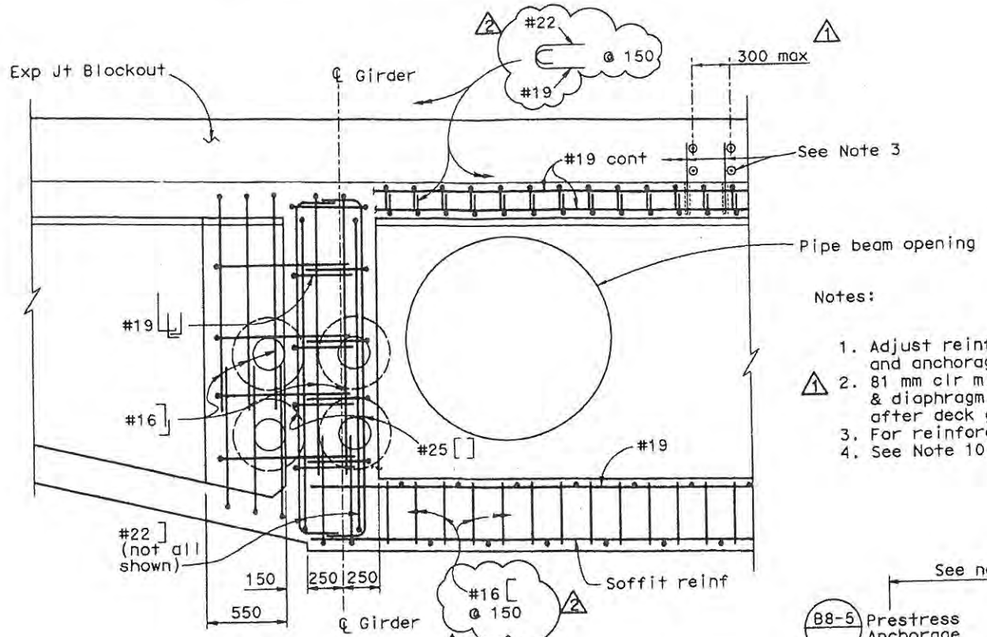

SECTION r-r
1:20

Notes:

1. Adjust reinforcement to clear prestressing tendons and anchorage.
2. 81 mm clr min shall be maintained for longitudinal reinf @ top deck & diaphragm rebars & top end of vertical headed bars after deck ground for seismic jt. Bend longitudinal reinf as required.
3. For reinforcement at deck joint blockouts, see "Seismic Joint" sheets.
4. See Note 10 on "Westbound Hinge FW Details No. 2" sheet.

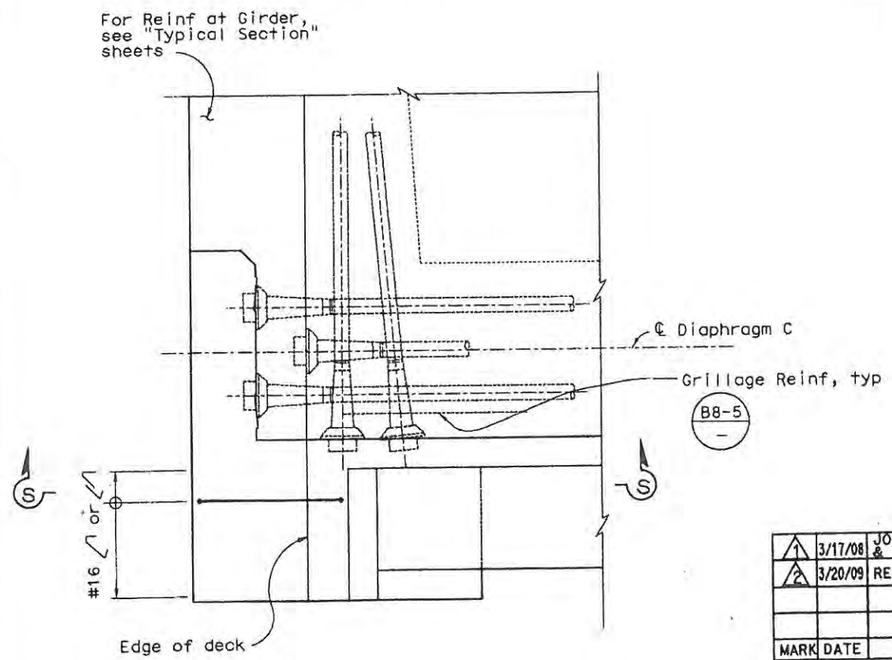

PARTIAL PLAN
1:20

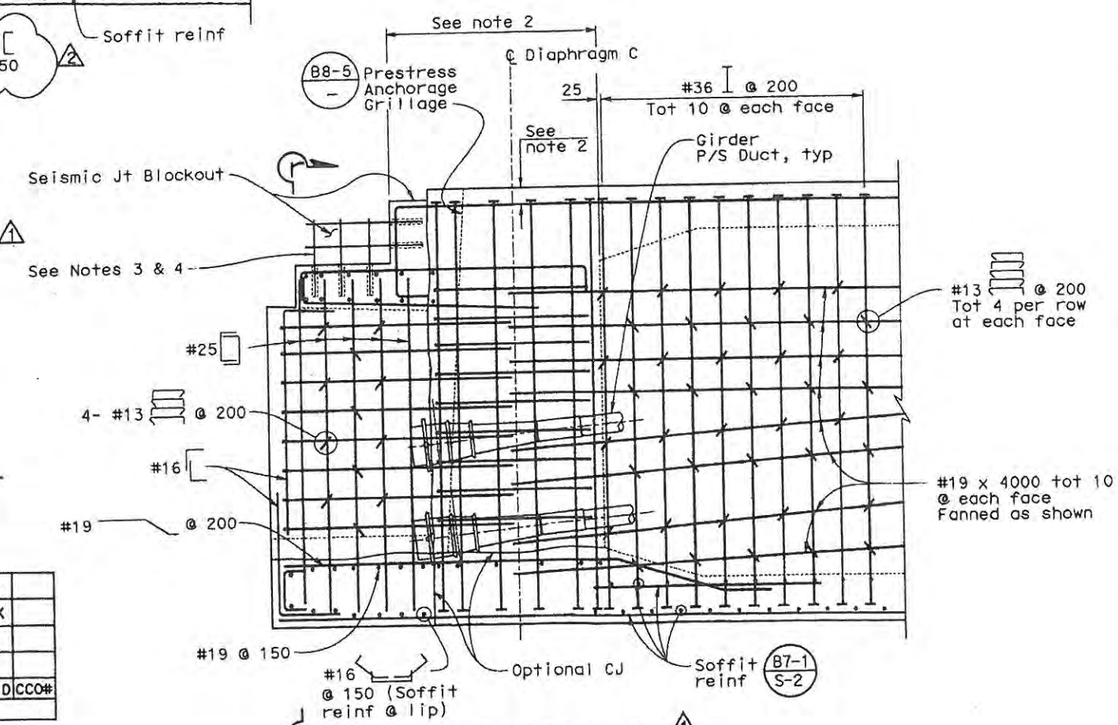

SECTION d-d
1:20

PROFESSIONAL ENGINEER VINH DIEU TRINH No. 50685 Exp. 9-30-2009 CIVIL STATE OF CALIFORNIA

STAMP IS VALID FOR REVISION 2 ONLY

MARK	DATE	DESCRIPTIONS	BY	CH'D	CCO#
1	3/17/08	JOINT IMPROVEMENT, ADD DOWELS & DELETE JT REINF	AW	VT	
2	3/20/09	REVISE TENDONS & REBAR DETAILS	VT	JSK	

REVISIONS

CONTRACT CHANGE ORDER NO. 86
SHEET 30 OF 35 6/11/09

Note:
The Contractor shall verify all controlling field dimensions before ordering or fabricating any material

ALL DIMENSIONS ARE IN MILLIMETERS UNLESS OTHERWISE SHOWN

DESIGN OVERSIGHT
SAM AKKAD FRANCISCO CARPIO BERNARD CHAN HASAN EL-NATUR
SIGN OFF DATE 4/3/2009

	BY	CHECKED
DESIGN	X. Wu	V. Trinh
DETAILS	A. Segura	V. Trinh
QUANTITIES	C. Lin	D. Saretsky

PREPARED FOR THE STATE OF CALIFORNIA DEPARTMENT OF TRANSPORTATION

Adam Wang
PROJECT ENGINEER

CU 04
EA 0120L1

BRIDGE NO. 34-0006L/R
KILOMETER POST 1.6

SAN FRANCISCO OAKLAND BAY BRIDGE
EAST SPAN SEISMIC SAFETY PROJECT

OAKLAND APPROACH STRUCTURES-PHASE 1

WESTBOUND HINGE EW DETAILS NO.15

DISREGARD PRINTS BEARING EARLIER REVISION DATES

REVISION DATES (PRELIMINARY STAGE ONLY) 5/18/05 10/28/05 8/28/06 10/27/06 2/23/07 5/24/07 11/21/07 1/31/08 1/23/08 1/28/08

SHEET 123R2 OF 224

ORIGINAL SCALE IN MILLIMETERS FOR REDUCED PLANS 0 10 20 30 40 50 60 70 80 90 100

Rev. Date: 5-18-98

FILENAME => $FIL DATE PLOTTED => $DATE$ TIME PLOTTED => $TIME$

pr 3, 2009

DIST	COUNTY	ROUTE	KILOMETER POST TOTAL PROJECT	SHEET NO.	TOTAL SHEETS
04	Ala	80	1.6/2.7	236S1	643

REGISTERED ENGINEER - CIVIL

03-20-09
PLANS APPROVAL DATE

REGISTERED PROFESSIONAL ENGINEER
VINH DIEU TRINH
No. 50685
Exp. 9-30-2009
CIVIL
STATE OF CALIFORNIA

The State of California or its officers or agents shall not be responsible for the accuracy or completeness of electronic copies of this plan sheet.

T.Y. LIN / MOFFATT & NICHOL
TWO HARRISON STREET, SUITE 500
SAN FRANCISCO, CA 94105

WKE, INC
400 NORTH TUSTIN AVEENUE, SUITE 285
SANTA ANA, CA 92705

To get to the Caltrans web site, go to: http://www.dot.ca.gov

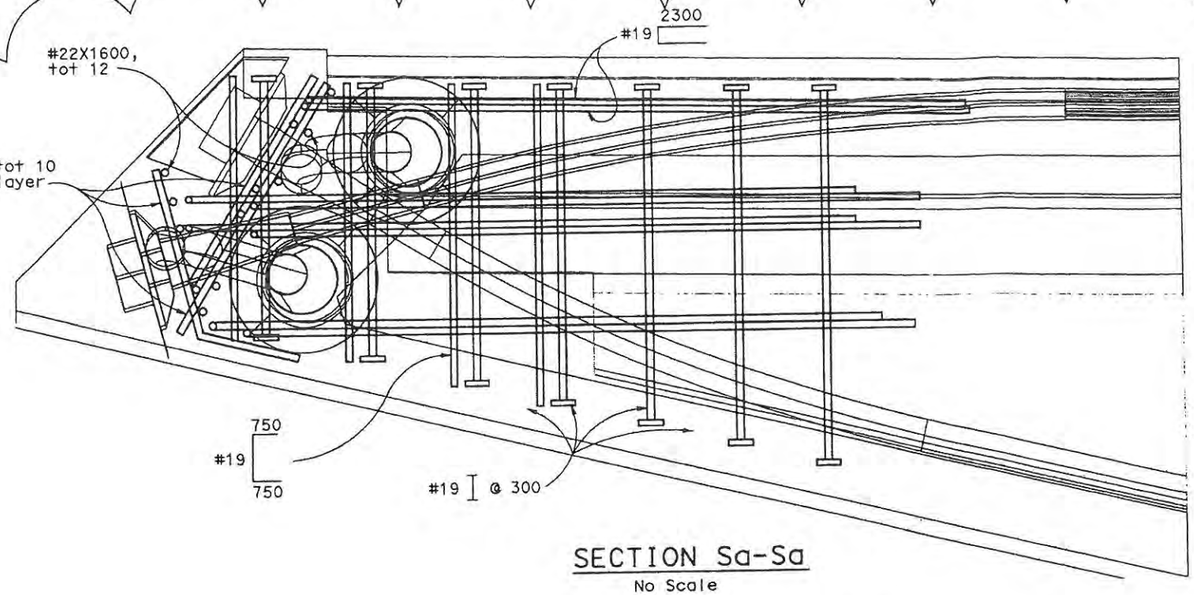

SECTION Sa-Sa
No Scale

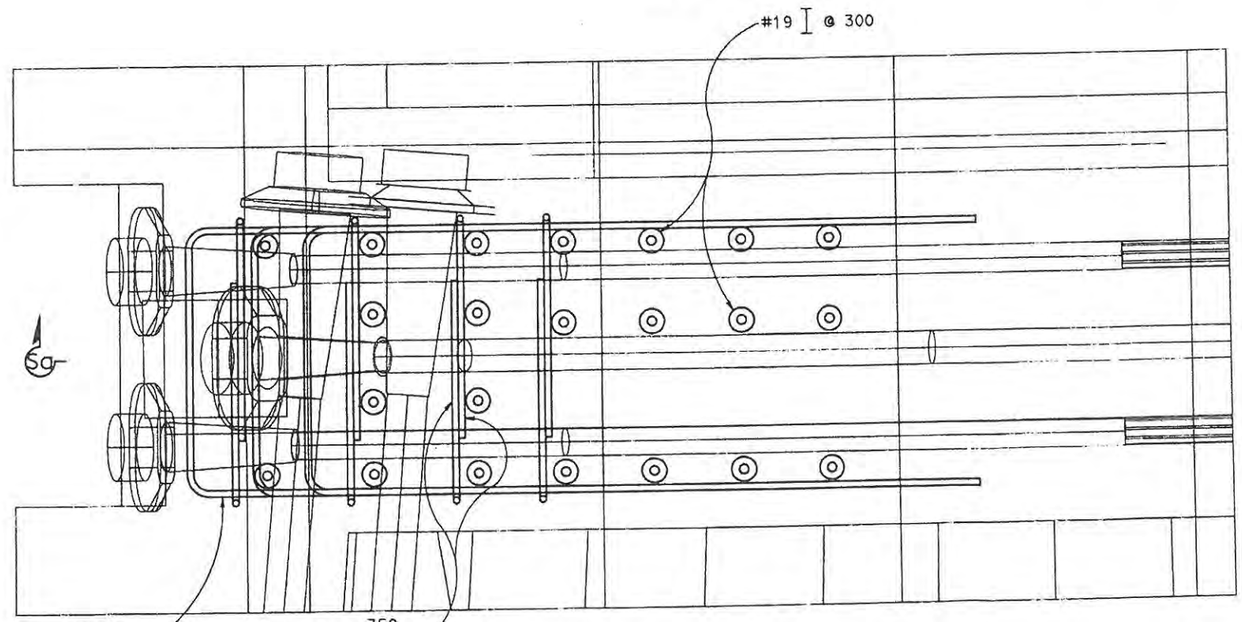

PARTIAL PLAN
No Scale

SUPPLEMENTAL SHEET
CONTRACT CHANGE ORDER NO. 86
SHEET 31 OF 35 6/11/09

Note:
The Contractor shall verify all controlling field dimensions before ordering or fabricating any material

ALL DIMENSIONS ARE IN MILLIMETERS UNLESS OTHERWISE SHOWN

SAN FRANCISCO OAKLAND BAY BRIDGE
EAST SPAN SEISMIC SAFETY PROJECT

OAKLAND APPROACH STRUCTURES-PHASE 1

WESTBOUND HINGE EW DETAILS NO.15A

DESIGN OVERSIGHT — HASAN EL-NATUR 4/3/2009
SIGN OFF DATE

DESIGN	BY V. Trinh	CHECKED Y. Shangkuan	
DETAILS	BY V. Trinh	CHECKED Y. Shangkuan	
QUANTITIES	BY	CHECKED	

PREPARED FOR THE STATE OF CALIFORNIA DEPARTMENT OF TRANSPORTATION

Adam Wang
PROJECT ENGINEER

CU 04
EA 0120L1

BRIDGE NO. 34-0006L/R
KILOMETER POST 1.6

DISREGARD PRINTS BEARING EARLIER REVISION DATES
REVISION DATES (PRELIMINARY STAGE ONLY) 3/06/09

SHEET 123S1 OF 224

ORIGINAL SCALE IN MILLIMETERS FOR REDUCED PLANS 0 10 20 30 40 50 60 70 80 90 100

Rev. Date: 5-18-98

FILENAME => $F.
DATE PLOTTED => $DATE$
TIME PLOTTED => $TIME$

pr 3,2009

DIST	COUNTY	ROUTE	KILOMETER POST TOTAL PROJECT	SHEET NO.	TOTAL SHEETS
04	Ala	80	1.6/2.7	237R2	643

Adam Wang
REGISTERED ENGINEER - CIVIL
1-29-07
PLANS APPROVAL DATE

REGISTERED PROFESSIONAL ENGINEER ADAM TH WANG No. 40402 Exp. 3-31-2009 CIVIL STATE OF CALIFORNIA

The State of California or its officers or agents shall not be responsible for the accuracy or completeness of electronic copies of this plan sheet.

T.Y. LIN / MOFFATT & NICHOL
TWO HARRISON STREET, SUITE 500
SAN FRANCISCO, CA 94105

W. KOO & ASSOCIATES, INC
625 THE CITY DRIVE SOUTH, SUITE 200
ORANGE, CA 92868

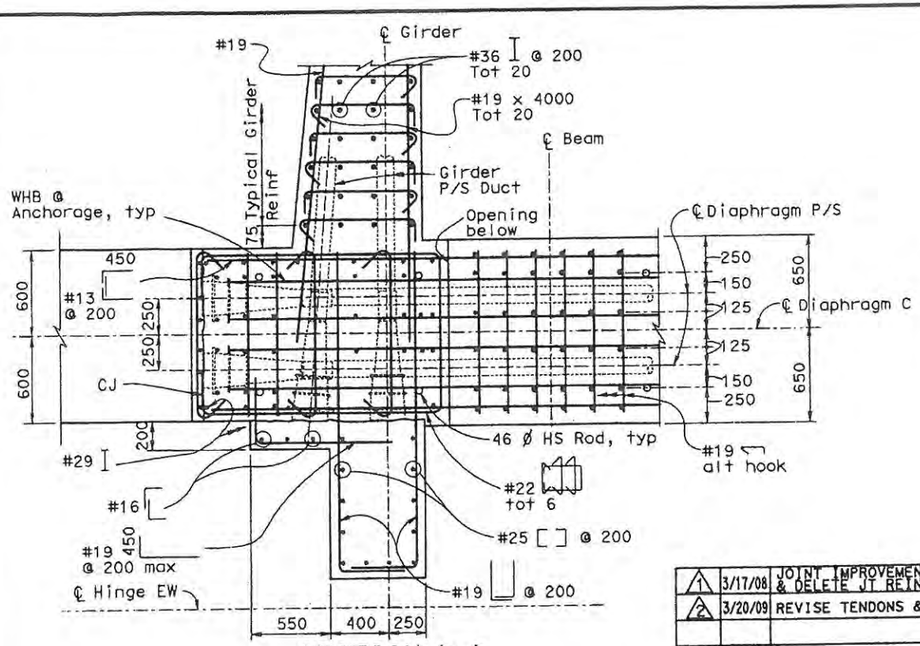

SECTION b-b
1:20

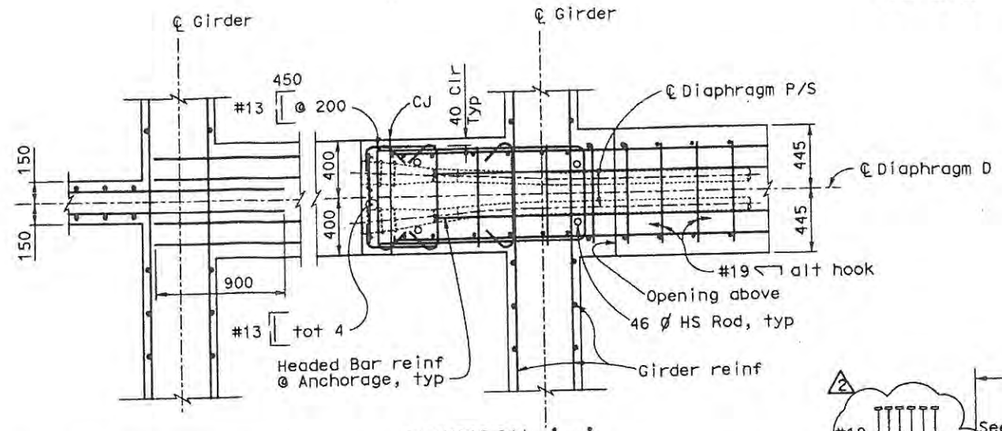

SECTION j-j
1:20

MARK	DATE	DESCRIPTIONS	BY	CH'D	CCO#
1	3/17/08	JOINT IMPROVEMENT, ADD DOWELS & DELETE JT REINF	AW	VT	
2	3/20/09	REVISE TENDONS & REBAR DETAILS	VT	JSK	

REVISIONS

CONTRACT CHANGE ORDER NO. 86
SHEET 32 OF 35 6/11/09

REGISTERED PROFESSIONAL ENGINEER VINH DIEU TRINH No. 50685 Exp. 9-30-2009 CIVIL STATE OF CALIFORNIA

STAMP IS VALID FOR REVISION 2 ONLY

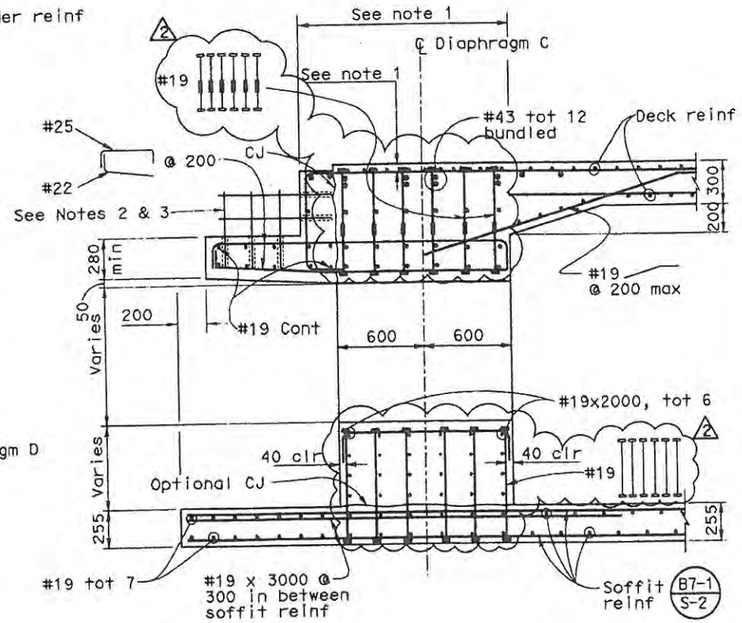

SECTION e-e
1:20

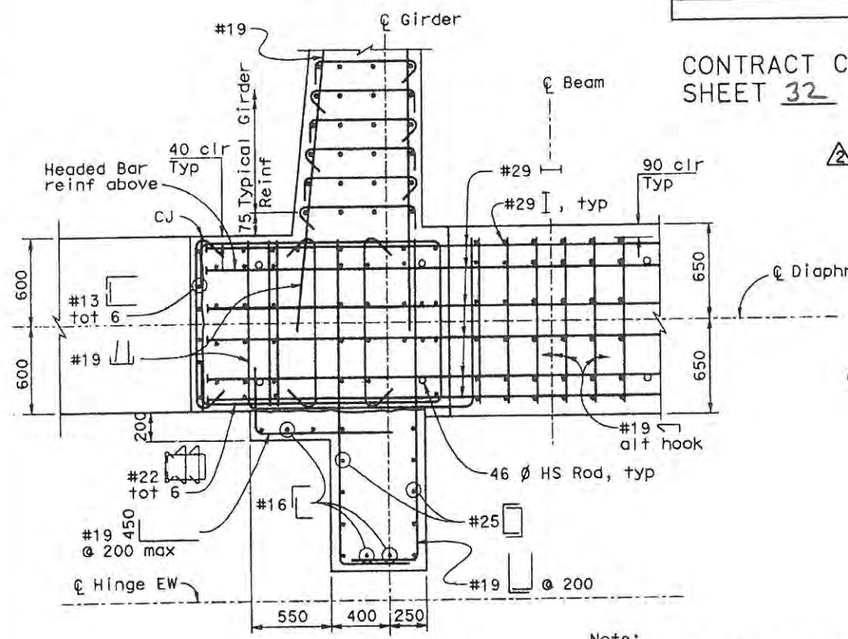

SECTION c-c
1:20

Note:
For reinforcement not shown, see "Section b-b"

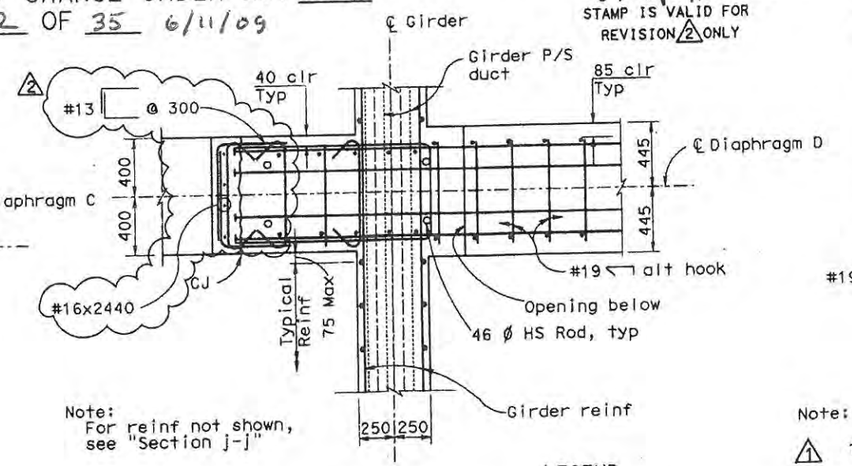

SECTION k-k
1:20

Note:
For reinf not shown, see "Section j-j"

LEGEND
⊢ Indicates headed bar reinforcement

Note:

1. 81 mm clr min should be maintained for longitudinal reinf @ top layer of deck & diaphragm rebars & top end of vertical headed bars after deck ground off for seismic jt. Bend longitudinal reinf as required.
2. For reinforcement at deck joint blockouts, see "Seismic Joint" sheets.
3. See Note 10 on "Westbound Hinge FW Details No. 2" sheet.

The Contractor shall verify all controlling field dimensions before ordering or fabricating any material

ALL DIMENSIONS ARE IN MILLIMETERS UNLESS OTHERWISE SHOWN

DESIGN OVERSIGHT
SAM AKKAD FRANCISCO CARPIO BERNARD CHAN HASAN EL-NATUR
SIGN OFF DATE 4/3/2009
Rev. Date: 5-18-98

DESIGN	BY X. Wu	CHECKED V. Trinh	
DETAILS	BY A. Segura	CHECKED V. Trinh	
QUANTITIES	BY C. Lin	CHECKED D. Saretsky	

ORIGINAL SCALE IN MILLIMETERS FOR REDUCED PLANS 0 10 20 30 40 50 60 70 80 90 100

PREPARED FOR THE STATE OF CALIFORNIA DEPARTMENT OF TRANSPORTATION

Adam Wang
PROJECT ENGINEER

CU 04
EA 0120L1

BRIDGE NO. 34-0006L/R
KILOMETER POST 1.6

DISREGARD PRINTS BEARING EARLIER REVISION DATES

SAN FRANCISCO OAKLAND BAY BRIDGE
EAST SPAN SEISMIC SAFETY PROJECT

OAKLAND APPROACH STRUCTURES - PHASE 1

WESTBOUND HINGE EW DETAILS NO.16

REVISION DATES (PRELIMINARY STAGE ONLY) 5/13/05 10/26/05 8/28/06 10/26/06 2/23/06 5/24/06 11/13/06 1/13/06 1/12/06 7/12/06

SHEET 124R2 OF 224

FILENAME => sf1
DATE PLOTTED => $DATE$
TIME PLOTTED => $TIME$

pr 3, 2009

DIST	COUNTY	ROUTE	KILOMETER POST TOTAL PROJECT	SHEET NO.	TOTAL SHEETS
04	Ala	80	1.6/2.7	261R2	643

Adam Wang
REGISTERED ENGINEER - CIVIL

1-29-07
PLANS APPROVAL DATE

REGISTERED PROFESSIONAL ENGINEER ADAM TW WANG No. 40402 Exp. 3-31-2007 CIVIL STATE OF CALIFORNIA

The State of California or its officers or agents shall not be responsible for the accuracy or completeness of electronic copies of this plan sheet.

T.Y. LIN / MOFFATT & NICHOL
TWO HARRISON STREET, SUITE 500
SAN FRANCISCO, CA 94105

W. KOO & ASSOCIATES, INC
625 THE CITY DRIVE SOUTH, SUITE 200
ORANGE, CA 92868

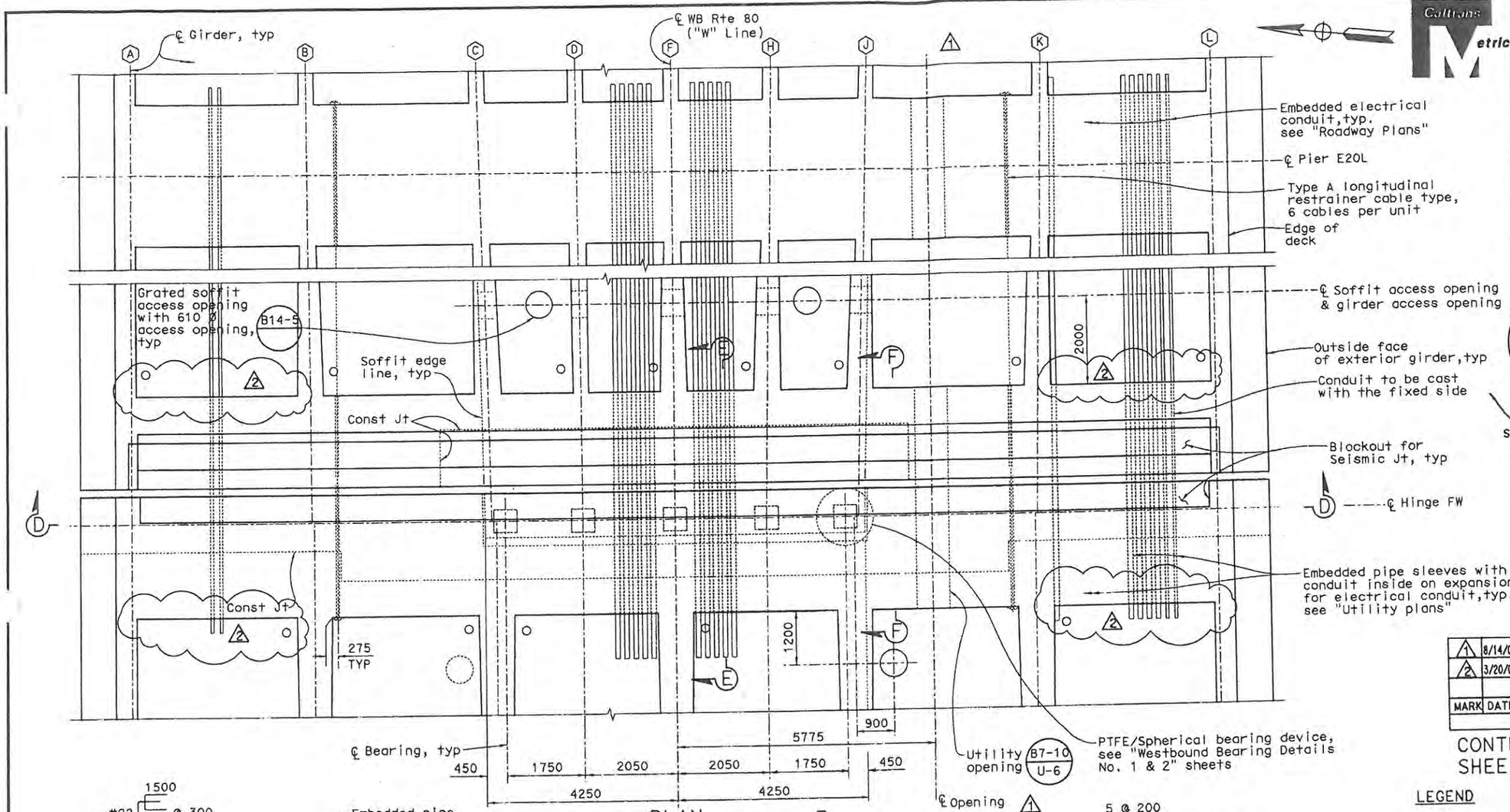

PLAN
1:50

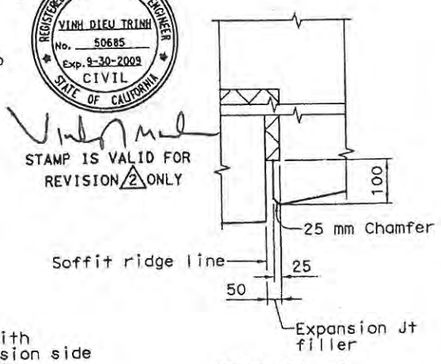

DETAIL 1
No Scale

REGISTERED PROFESSIONAL ENGINEER VINH DIEU TRINH No. 50685 Exp. 9-30-2009 CIVIL STATE OF CALIFORNIA

STAMP IS VALID FOR REVISION 2 ONLY

MARK	DATE	DESCRIPTIONS	BY	CH'D	CCO#
1	8/14/08	REVISE UTILITY OPENING LOCATION	VT	JSK	
2	3/20/09	REVISE HINGE REBARS	VT	JSK	

REVISIONS

CONTRACT CHANGE ORDER NO. 86
SHEET 33 OF 36 6/11/09

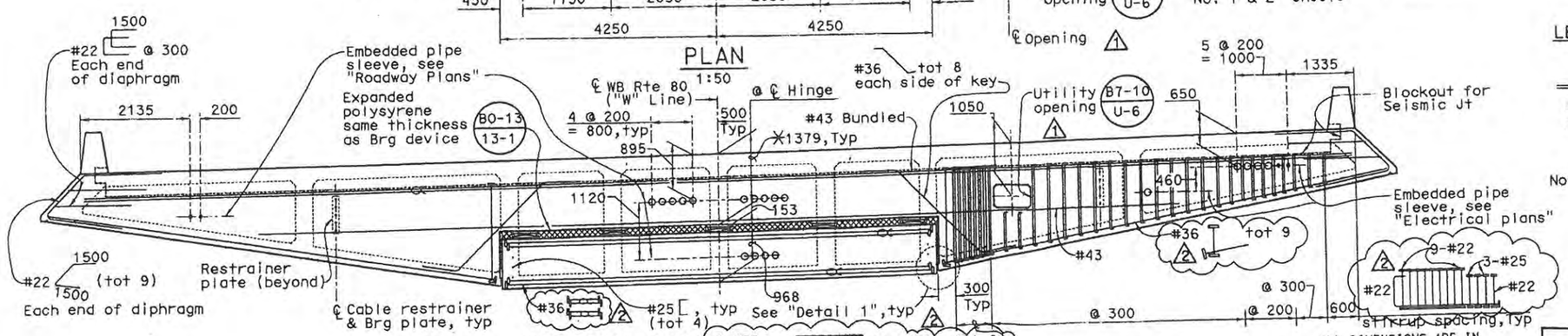

SECTION D-D
1:50

ALL DIMENSIONS ARE IN MILLIMETERS UNLESS OTHERWISE SHOWN

LEGEND

- (A) Denotes girder designation
- Denotes bundled bars
- Denotes headed bar (both ends)
- Denotes headed bar (one end)
- ✳ Depth includes 410 mm max blockout for joint seal assembly

Notes:

1. For longitudinal restrainer details, see Restrainer Unit Details No. 1 & 2" sheets.
2. For "Section E-E", see "Westbound Hinge FW Details No. 2" sheet.
3. For "Section F-F", see "Westbound Hinge FW Details No. 3" sheet.
4. For Hinge Cantilever and Suspension end reinforcement layout, see "Westbound Hinge FW Details No. 4" sheet.

SAN FRANCISCO OAKLAND BAY BRIDGE
EAST SPAN SEISMIC SAFETY PROJECT

OAKLAND APPROACH STRUCTURES-PHASE 1

WESTBOUND HINGE FW DETAILS NO.1

DESIGN OVERSIGHT
SAM AKKAD FRANCISCO CARPIO BERNARD CHAN HASAN EL-NATUR
SIGN OFF DATE 4/3/2009

	BY	CHECKED
DESIGN	X. Wu	A. Mouayed
DETAILS	G. Buelow	A. Wang
QUANTITIES	O. Jaradat	H. Haroun

PREPARED FOR THE DEPARTMENT OF TRANSPORTATION

Adam Wang
PROJECT ENGINEER

CU 04
EA 0120L1

BRIDGE NO. 34-0006L/R
KILOMETER POST 1.6

DISREGARD PRINTS BEARING EARLIER REVISION DATES

REVISION DATES (PRELIMINARY STAGE ONLY) 5/18/05 10/20/05 8/29/06 10/29/06 12/18/06 5/24/06 11/14/06 12/5/06 12/13/06 7/28/06

SHEET 148R2 OF 224

ORIGINAL SCALE IN MILLIMETERS FOR REDUCED PLANS 0 10 20 30 40 50 60 70 80 90 100

FILE --> 48R2.DGN

Rev. Date: 5-15-98

pr 3, 2009

DIST	COUNTY	ROUTE	KILOMETER POST TOTAL PROJECT	SHEET NO.	TOTAL SHEETS
04	Ala	80	1.6/2.7	262R2	643

Adam Wang
REGISTERED ENGINEER - CIVIL
1-29-07
PLANS APPROVAL DATE

REGISTERED PROFESSIONAL ENGINEER ADAM TH WANG No. 40402 Exp. 3-31-2009 CIVIL STATE OF CALIFORNIA

The State of California or its officers or agents shall not be responsible for the accuracy or completeness of electronic copies of this plan sheet.

T.Y. LIN / MOFFATT & NICHOL
TWO HARRISON STREET, SUITE 500
SAN FRANCISCO, CA 94105

W. KOO & ASSOCIATES, INC
625 THE CITY DRIVE SOUTH, SUITE 200
ORANGE, CA 92868

REGISTERED PROFESSIONAL ENGINEER VINH DIEU TRINH No. 50685 Exp. 9-30-2009 CIVIL STATE OF CALIFORNIA

STAMP IS VALID FOR REVISION 2 ONLY

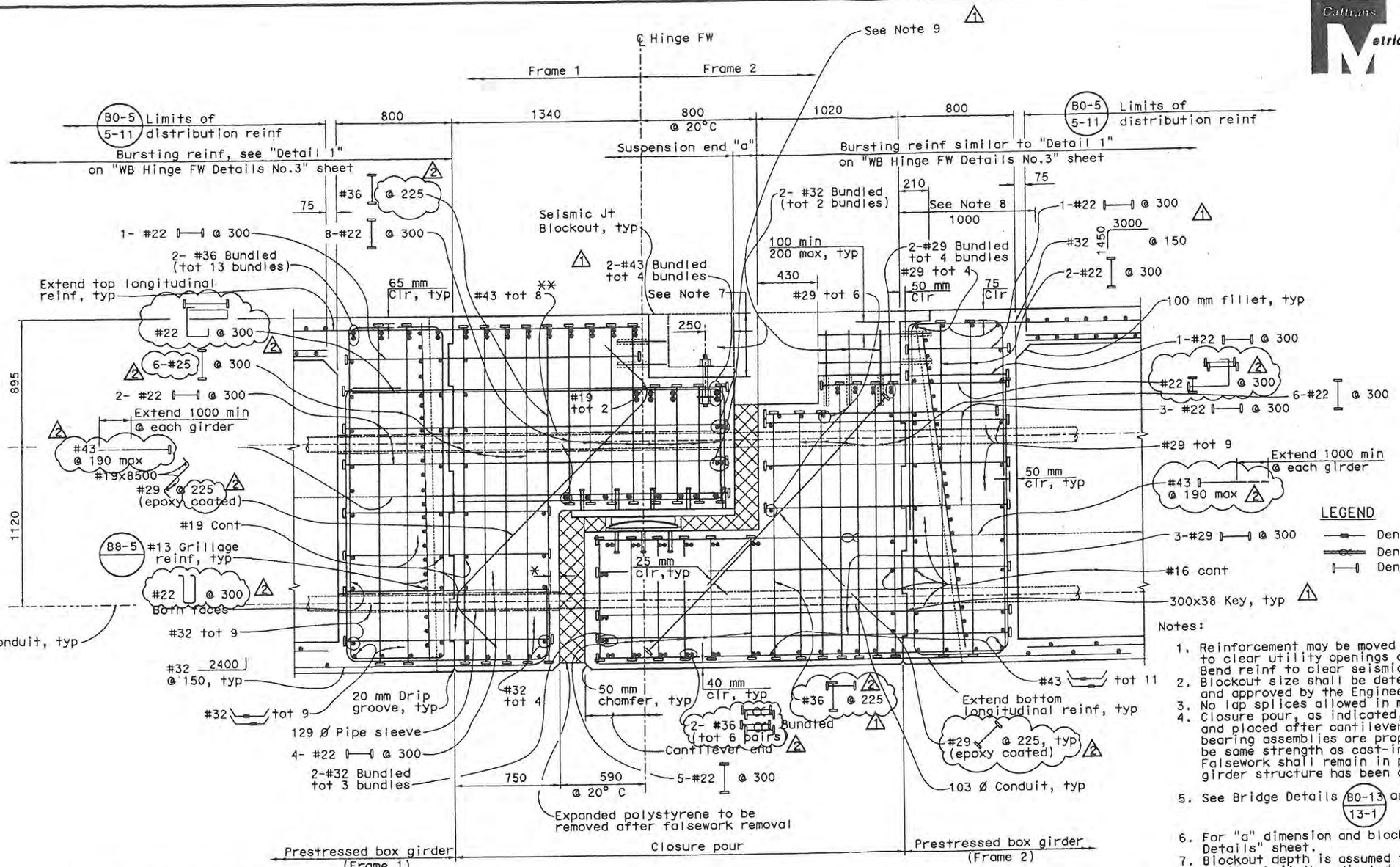

SECTION E-E
1:15

* - 75 mm Clr, typ
** - Terminate 900 mm beyond ℄ first interior girder

LEGEND
- Denotes mechanical splice
- Denotes bundled bars
- Denotes headed bar (both ends)

Notes:
1. Reinforcement may be moved or bundled in 2-bar bundles to clear utility openings and expansion Jt assembly. Bend reinf to clear seismic joint assembly as required.
2. Blockout size shall be determined by the Contractor and approved by the Engineer.
3. No lap splices allowed in main diaphragm reinforcement.
4. Closure pour, as indicated, shall be cast-in-place concrete and placed after cantilever end of hinge is constructed and bearing assemblies are properly positioned. Concrete shall be same strength as cast-in-place prestressed concrete. Falsework shall remain in place until prestress in box girder structure has been completed.
5. See Bridge Details B0-13/13-1 and B0-13/13-2
6. For "a" dimension and blockout details, see "Deck Joint Details" sheet.
7. Blockout depth is assumed to be 450 mm max. Contractor shall submit the adjusted detail of reinf for approval, if the blockout depth is altered.
8. 75 mm Clr min shall be maintained for longitudinal reinf @ top layer of deck & diaphragm rebars & top end of vertical headed bars after deck ground off for simisic jt. Bend longitudinal reinf as required.
9. For reinforcement and anchor bolts at deck joint blockouts, see "Seismic Joint" sheets.
10. If using drill & bond dowels at seismic joint blockouts. Contractor shall provide a permanent means for identifying locations for installing dowels after concreting.

MARK	DATE	DESCRIPTIONS	BY	CH'D	CCO#
1	3/17/08	JOINT IMPROVEMENT, ADD DOWELS & DELETE JT REINF	AW	VT	
2	3/20/09	REVISED HINGE REBARS	VT	JSK	

REVISIONS

CONTRACT CHANGE ORDER NO. 86
SHEET 34 OF 35 6/11/09

ALL DIMENSIONS ARE IN MILLIMETERS UNLESS OTHERWISE SHOWN

SAN FRANCISCO OAKLAND BAY BRIDGE
EAST SPAN SEISMIC SAFETY PROJECT

OAKLAND APPROACH STRUCTURES-PHASE 1

WESTBOUND HINGE FW DETAILS NO.2

DESIGN OVERSIGHT: SAM AKKAD, FRANCISCO CARPIO, BERNARD CHAN, HASAN EL-HATUR
SIGN OFF DATE 4/3/2009
Rev. Date: 5-18-98

DESIGN	BY X. Wu	CHECKED A. Moubayed	
DETAILS	BY G. Buelow	CHECKED A. Moubayed	
QUANTITIES	BY X. Wu	CHECKED H. Haroun	

PREPARED FOR THE STATE OF CALIFORNIA DEPARTMENT OF TRANSPORTATION

ORIGINAL SCALE IN MILLIMETERS FOR REDUCED PLANS 0 10 20 30 40 50 60 70 80 90 100

Adam Wang
PROJECT ENGINEER

CU 04
EA 0120L1

BRIDGE NO. 34-0006L/R
KILOMETER POST 1.6

DISREGARD PRINTS BEARING EARLIER REVISION DATES

REVISION DATES (PRELIMINARY STAGE ONLY) 5/18/03 10/20/03 8/27/04 10/29/04 2/18/05 8/24/05 11/14/05 1/31/06 4/3/06 7/28/06

SHEET 149R2 OF 224

FILENAME => $FIL TIME PLOTTED => $TIME$ DATE PLOTTED => $DATE$

pr 3, 2009

MARK	DATE	DESCRIPTIONS	BY	CH'D	CCO#
1	3/17/08	JOINT IMPROVEMENT, ADD DOWELS & DELETE JT REINF	AW	VT	
2	3/20/09	REVISED HINGE REBARS	VT	JSK	

REVISIONS

DIST	COUNTY	ROUTE	KILOMETER POST TOTAL PROJECT	SHEET NO.	TOTAL SHEETS
04	Ala	80	1.6/2.7	263R2	643

Adam Wang
REGISTERED ENGINEER - CIVIL
4 28 09
PLANS APPROVAL DATE

REGISTERED PROFESSIONAL ENGINEER ADAM TW WANG No. 40402 Exp. 3-31-2009 CIVIL STATE OF CALIFORNIA

The State of California or its officers or agents shall not be responsible for the accuracy or completeness of electronic copies of this plan sheet.

T.Y. LIN / MOFFATT & NICHOL
TWO HARRISON STREET, SUITE 500
SAN FRANCISCO, CA 94105

W. KOO & ASSOCIATES, INC
625 THE CITY DRIVE SOUTH, SUITE 200
ORANGE, CA 92868

REGISTERED PROFESSIONAL ENGINEER VINH DIEU TRINH No. 50685 Exp. 9-30-2009 CIVIL STATE OF CALIFORNIA

STAMP IS VALID FOR REVISION 2 ONLY

CONTRACT CHANGE ORDER NO. 86
SHEET 35 OF 35 6/11/09

Caltrans Metric

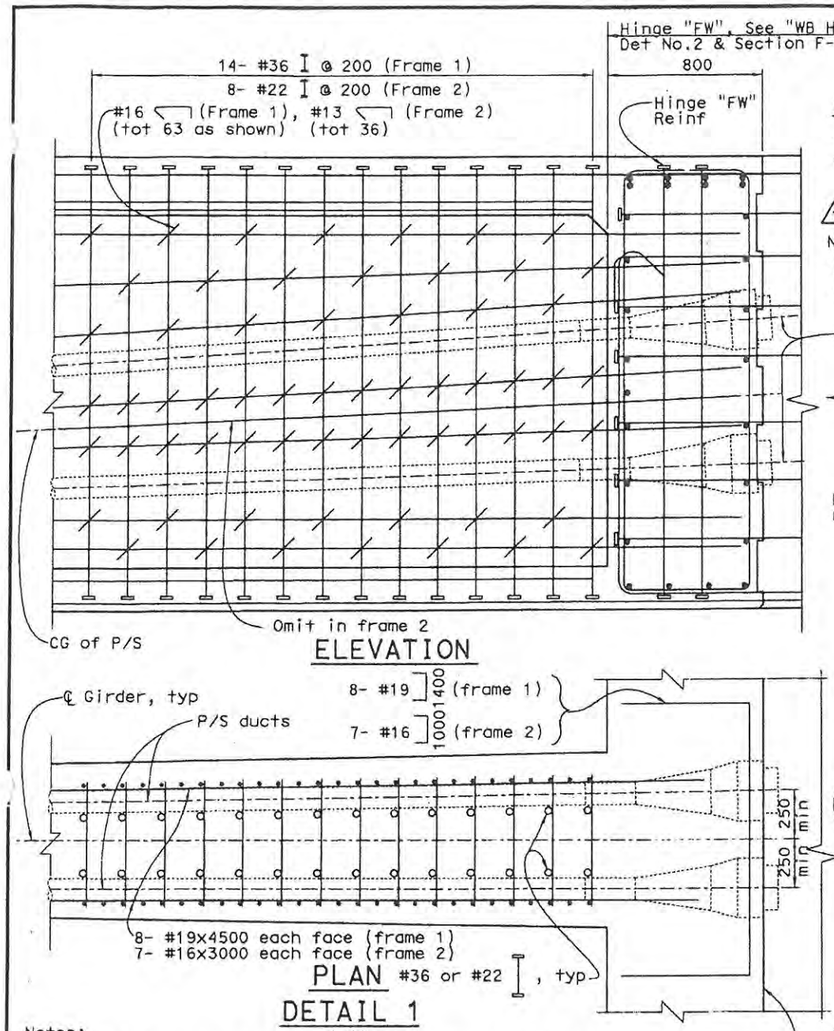

LEGEND

- Denotes mechanical splice
- Denotes bundled bars
- Denotes headed bar (both ends)

1 Note: Additional bursting reinf shown @ end of frame 1 is typical for each interior Girder, reinf for each interior Girder @ beginning of frame 2 is similar but opposite hand.

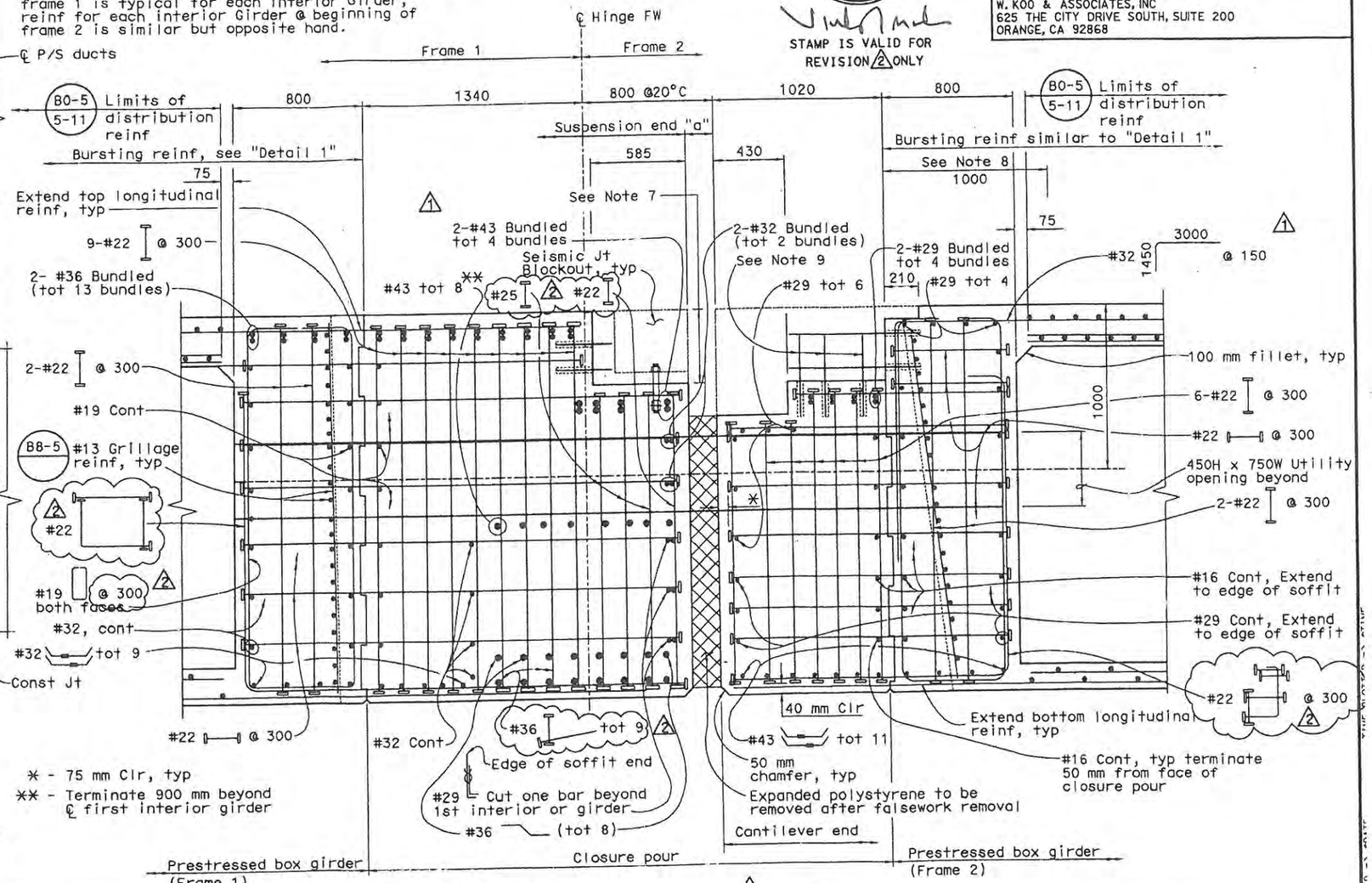

* - 75 mm Clr, typ

** - Terminate 900 mm beyond ℄ first interior girder

SECTION F-F
1:15

1 Note: For information not shown, see "Section E-E" on "Westbound Hinge FW Details No.2" sheet

Notes:

1. Reinforcement may be moved or bundled in 2-bar bundles to clear utility openings and expansion Jt assembly. Bend reinf to clear seismic joint assembly as required.
2. Blockout size shall be determined by the Contractor and approved by the Engineer.
3. No lap splices allowed in main diaphragm reinforcement.
4. Closure pour, as indicated, shall be cast-in-place concrete and placed after cantilever end of hinge is constructed and bearing assemblies are properly positioned. Concrete shall be same strength as cast-in-place prestressed concrete. Falsework shall remain in place until prestress in box girder structure has been completed.
5. See Bridge Details B0-13 / 13-1 and B0-13 / 13-2
6. For "a" dimension and blockout details, see "Deck Joint Details" sheet.
7. Blockout depth is assumed to be 450 mm max. Contractor shall submit the adjusted detail of reinf for approval, if the blockout depth is altered.
8. 1 75 mm Clr min shall be maintained for longitudinal reinf @ top layer of deck & diaphragm rebars & top end of vertical headed bars after deck ground off for simisic jt. Bend longitudinal reinf as required.
9. 1 For reinforcement and anchor bolts at deck joint blockouts, see "Seismic Joint" sheets.
10. See Note 10 on "Westbound Hinge FW Details No. 2" sheet.

ALL DIMENSIONS ARE IN MILLIMETERS UNLESS OTHERWISE SHOWN

SAN FRANCISCO OAKLAND BAY BRIDGE
EAST SPAN SEISMIC SAFETY PROJECT

OAKLAND APPROACH STRUCTURES-PHASE 1

WESTBOUND HINGE FW DETAILS NO.3

DESIGN OVERSIGHT
SAM AKKAD FRANCISCO CARPIO BERNARD CHAN HASAN EL-NATUR
SIGN OFF DATE 4/3/2009
Rev. Date: 5-18-98

DESIGN	BY X. Wu	CHECKED A. Moubayed	
DETAILS	BY G. Buelow	CHECKED A. Moubayed	
QUANTITIES	BY X. Wu	CHECKED H. Haroun	

PREPARED FOR THE STATE OF CALIFORNIA DEPARTMENT OF TRANSPORTATION

Adam Wang
PROJECT ENGINEER

CU 04
EA 0120L1

BRIDGE NO. 34-0006L/R
KILOMETER POST 1.6

DISREGARD PRINTS BEARING EARLIER REVISION DATES

REVISION DATES (PRELIMINARY STAGE ONLY) 5/18/05 10/28/05 8/29/06 10/27/06 2/13/06 5/24/06 11/24/06 1/23/06 1/23/06 7/21/06

SHEET 150R2 OF 224

ORIGINAL SCALE IN MILLIMETERS FOR REDUCED PLANS 0 10 20 30 40 50 60 70 80 90 100

FILE -> 4PROJECT

Apr 3, 2009

STATE OF CALIFORNIA - DEPARTMENT OF TRANSPORTATION

CONTRACT CHANGE ORDER MEMORANDUM

DATE: 6/11/2009

TO: AMER BATA / BEN GHAFGHAZI	FILE: E.A. 04 - 0120L4
FROM: BEN GHAFGHAZI	CO-RTE-PM ALA-80-1.6/2.7
	FED. NO. NO FED AID
CCO#: 86 SUPPLEMENT#: 0 Category Code: CHPT	CONTINGENCY BALANCE (incl. this change) $6,278,534.20
COST: $242,196.49 INCREASE ☑ DECREASE ☐	HEADQUARTERS APPROVAL REQUIRED? ☑ YES ☐ NO
SUPPLEMENTAL FUNDS PROVIDED: $0.00	IS THIS REQUEST IN ACCORDANCE WITH ENVIRONMENTAL DOCUMENTS? ☑ YES ☐ NO
CCO DESCRIPTION: Revise reinforcing and ducts WB.	**PROJECT DESCRIPTION:** Construct bridge, roadway, building and electrical system.

Original Contract Time:	Time Adj. This Change:	Previously Approved CCO Time Adjustments:	Percentage Time Adjusted: (including this change)	Total # of Unreconciled Deferred Time CCO(s): (including this change)
810 Day(s)	0 Day(s)	184 Day(s)	23 %	10

THIS CHANGE ORDER PROVIDES FOR:

Revising the bar reinforcing steel and post tensioning duct layout at Frames 1 and 2 of Westbound Bridge No. 34-0006L Superstructure as shown on sheets 3 of 35 through 35 of 35 of the CCO. Work shall be in accordance with Sections 10-1.52, "Prestressing Concrete," and 10-1.67, "Reinforcement," of the Special Provisions.

This change is necessary to resolve conflicts identified on the Integrated Shop Drawings (ISDs) in accordance with Section 5-1.15, "Integrated Shop Drawings," of the Special Provisions. After reviewing the ISD plans several conflicts were discovered involving reinforcing steel, post tensioning ducts and utility lines. The reinforcing steel and post tensioning ducts needed to be adjusted to resolve these conflicts.

Supplying and testing additional bar reinforcing steel, and providing professional design services to produce ISDs for the CCO plans will be paid as an Adjustment of Compensation at Agreed Lump Sum of $138,386.49. Additional concrete will be paid as an increase in Item #103, "Structural Concrete, Bridge, Location B (Bay)," of 34 M3 for $83,810.00. Modifying previously installed reinforcing to accommodate the changes due to this CCO will be paid as Extra Work at Force Account of $20,000.00.

This change has been discussed and concurred with Hasan El-Natur of Structures Design; Jal Birdy of Moffat Nichol; Lina Ellis of Structures Maintenance; Patrick Treacy, HQ Construction Coordinator; Mike Forner, SFOBB Construction Manager; and Ken Terpstra, Project Manager. An Issue and Approve was granted by Headquarters on June 17, 2009.

No adjustment of contract time is warranted since this change does not affect the controlling operation.

CONCURRED BY:

Construction Engineer:	Ben Ghafghazi	Date 6/17/09
Bridge Engineer:	Mehran Ardakanian	Date 06/17/09
Project Engineer:	Hasan El-Natur, Structures Design	Date 12/2/08
Project Manager:	Ken Terprstra	Date 6/16/09
FHWA Rep.:		Date
Environmental:		Date
Other (specify):	Jal Birdy, Moffat Nichol	Date 12/2/08
Other (specify):	Lina Ellis, Structures Maint.	Date 4/15/09
District Prior Approval By:	Mike Forner, Principal TE	Date 6/16/09
HQ (Issue Approve) By:	Bob Molera	Date 6/17/09
Resident Engineer's Signature:		Date 6/17/09

ESTIMATE OF COST

	THIS REQUEST	TOTAL TO DATE
ITEMS	$83,810.00	$83,810.00
FORCE ACCOUNT	$20,000.00	$20,000.00
AGREED PRICE	$0.00	$0.00
ADJUSTMENT	$138,386.49	$138,386.49
TOTAL	$242,196.49	$242,196.49

FEDERAL PARTICIPATION

☐ PARTICIPATING ☐ PARTICIPATING IN PART ☑ NONE
☐ NON-PARTICIPATING (MAINTENANCE) ☐ NON-PARTICIPATING

FEDERAL SEGREGATION (if more than one Funding Source or P.I.P. type)
☑ CCO FUNDED PER CONTRACT ☐ CCO FUNDED AS FOLLOWS

FEDERAL FUNDING SOURCE	PERCENT

ADA Notice: For individuals with sensory disabilities, this document is available in alternate formats. For information call: (916) 654-6410 or TDD (916) 654-3880 or write Records and Forms Management, 1120 N Street, MS-89, Sacramento, CA 95814.

CONTRACT CHANGE ORDER

Change Requested by: Engineer

CCO 87	Suppl. No. 0	Contract No. 04 - 0120L4	Road ALA-80-1.6/2.7	FED. AID LOC.: NO FED AID

To: **M C M CONSTRUCTION INC**

You are directed to make the following changes from the plans and specifications or do the following described work not included in the plans and specifications for this contract. ***NOTE: This change order is not effective until approved by the Engineer.***

Description of work to be done, estimate of quantities and prices to be paid. (Segregate between additional work at contract price, agreed price and force account.) Unless otherwise stated, rates for rental of equipment cover only such time as equipment is actually used and no allowance will be made for idle time. This last percentage shown is the net accumulated increase or decrease from the original quantity in the Engineer's Estimate.

Extra Work at Force Account:

Provide labor, equipment, and materials necessary to install State furnished expansion loops to connect utilites lines from Skyway to Oakland Touch Down as follows:

1) At Bridge No. 34-0006L and the east end of the Skyway structure install State furnished expansion loops for 300 mm water line and 150 mm reclaimed water line. Fabricate and install offset pipes per details shown on sheets 2 of 5 through 5 of 5 of this CCO.

2) At Bridge No. 34-0006R and the east end of the Skyway structure install State furnished expansion loops for 250 mm sewer line.

All work shall be in accordance with Section 10-1.47, "Utility Lines (Bridge)," of the Special Provisions.

Estimated cost of Extra Work at Force Account $75,000.00

Consideration of a time adjustment will be deferred until completion of the work specified herein. Determination of a commensurate time extension will be made in accordance with Section 10-1.14, "Progress Schedule (Critical Path Method)," of the Special Provisions and Section 8-1.07, "Liquidated Damages," of the Standard Specifications.

Estimated Cost: Increase ☑ **Decrease** ☐ **$75,000.00**

By reason of this order the time of completion will be adjusted as follows: Deferred

Submitted by

Signature	Resident Engineer BEN GHAFGHAZI	Date 4/3/09

Approval Recommended by

Signature	Construction Engineer Ben Ghafghazi	Date 4/3/09

Engineer Approval by

Signature	Construction Manager Amer Bata	Date 6/9/09

We the undersigned contractor, have given careful consideration to the change proposed and agree, if this proposal is approved, that we will provide all equipment, furnish the materials, except as may otherwise be noted above, and perform all services necessary for the work above specified, and will accept as full payment therefor the prices shown above.

NOTE: If you, the contractor, do not sign acceptance of this order, your attention is directed to the requirements of the specifications as to proceeding with the ordered work and filing a written protest within the time therein specified.

Contractor Acceptance by

Signature	(Print name and title) EDMUNDO A. PUCHI, TREASURER	Date 6/2/09

DIST.	COUNTY	ROUTE	KILOMETER POST TOTAL PROJECT	SHEET NO.	TOTAL SHEETS
04	Ala	80	1.6/2.7	369A	643

Caltrans Metric

Michael R. White 12/29/2008
REGISTERED ENGINEER-MECHANICAL DATE

PLANS APPROVAL DATE

REGISTERED PROFESSIONAL ENGINEER Michael R. White No. M29108 Exp. 6/30/10 MECH STATE OF CALIFORNIA

The State of California or its officers or agents shall not be responsible for the accuracy or completeness of electronic copies of this plan sheet.

Caltrans now has a web site! To get to the web site, go to: http://www.dot.ca.gov

Notes:

1. Remove the (E) Megaflange, field cut the end of the (E) 12" line as needed and re-attach the Megaflange.

2. Remove the (E) Megaflange, field cut the end of the (E) 6" line as needed and re-attach the Megaflange.

3. Field cut to length the pipe sections between the expansion loops and the valves. Use the Megaflange to allow rotational alignment.

4. The pipes in the OTD are moved 50 mm Northward in relation to the pipes in the Skyway. This is taken up by the loops.

5. These two embed plates are to be used to pull the pipe(s) northward if needed. If used, attach the same support elements as used for the minor supports but with just a single rod.

6. For the minor supports (not anchors) use typical support for respective lines but without the kicker element.

7. Pipe supports and embed plates are not shown to the east of the anchors for clarity.

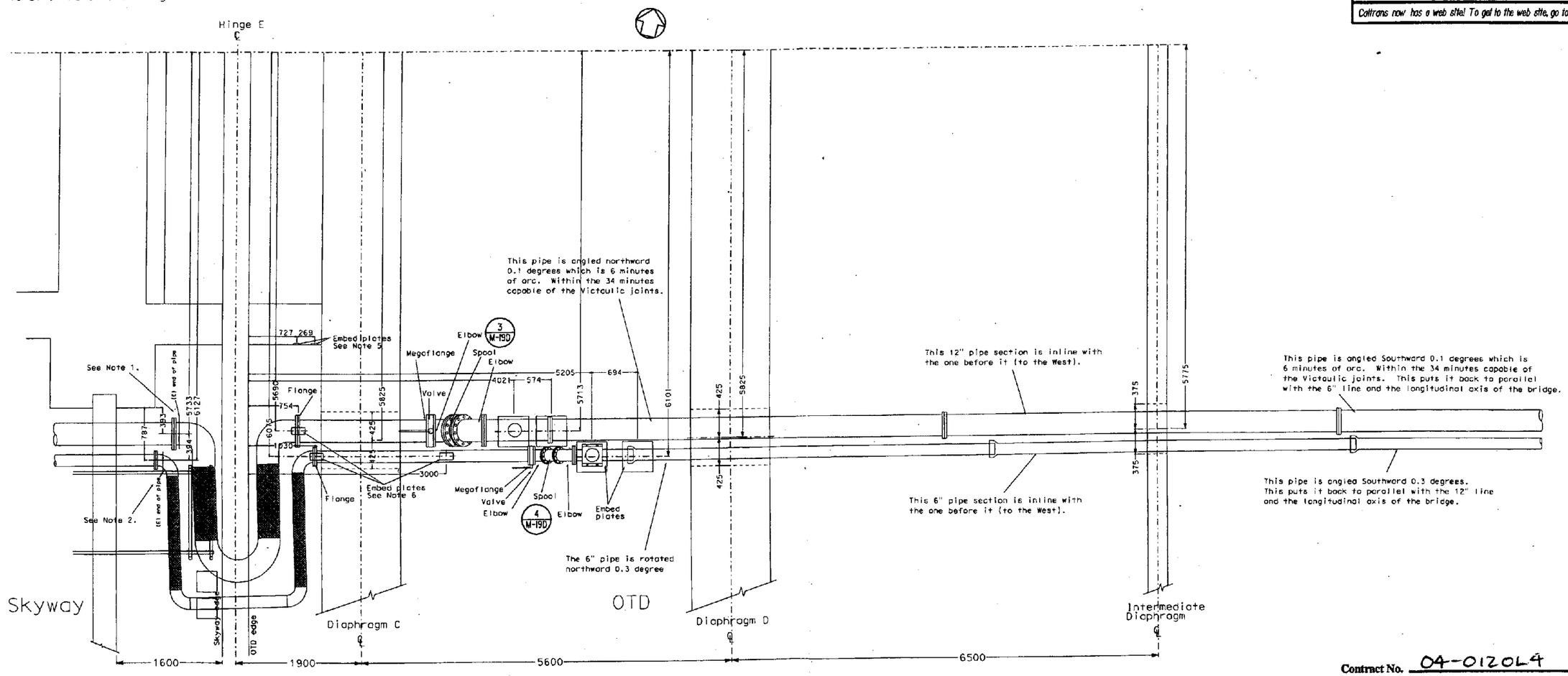

Contract No. 04-0120L4

Page 2 of 5

CCO No. 87 Suppl. No. 0

Contractor MCM

Res. Engr. B. Ghafghazi

1 Plan View - Water line details near Hinge EW

See Sheet M-19B for Elevation

ALL DIMENSIONS SHOWN IN MILLIMETERS, EXCEPT AS NOTED

	BY	CHECKED
DESIGN	Michael R. White	
DETAILS	Michael R. White	
QUANTITIES		

STATE OF CALIFORNIA
DEPARTMENT OF TRANSPORTATION

DIVISION OF ENGINEERING SERVICES
ELECTRICAL-MECHANICAL-WATER AND WASTEWATER DESIGN

BRIDGE NO. 34-0006L/R
KM POST 1.6

OAKLAND TOUCHDOWN PHASE 1

Hinge EW pipe details I

SHEET M-19A

CU 04251
EA 0120L1

DISREGARD PRINTS BEARING EARLIER REVISION DATES 12/29/08

REVISION DATES (PRELIMINARY STAGE ONLY) SHEET OF

DOS ELEC (ID/98)
FILE => M-19A.dgn
DATE PLOTTED => 05-JAN-2009 TIME PLOTTED => 15:23

ORIGINAL SCALE IN MILLIMETERS FOR REDUCED PLANS 0 10 20 30 40 50 60 70 80 90 100

FILE => M-19A.dgn

USERNAME => mwhite DATE PLOTTED => 05-JAN-2009 TIME PLOTTED => 15:23

DIST.	COUNTY	ROUTE	KILOMETER POST TOTAL PROJECT	SHEET NO.	TOTAL SHEETS
04	Ala	80	1.6/2.7	369B	643

Caltrans Metric

Michael R. White — REGISTERED ENGINEER-MECHANICAL — 12/29/2008 DATE

PLANS APPROVAL DATE

REGISTERED PROFESSIONAL ENGINEER — Michael R. White — No. M29108 — Exp. 6/30/10 — MECH — STATE OF CALIFORNIA

The State of California or its officers or agents shall not be responsible for the accuracy or completeness of electronic copies of this plan sheet.

Caltrans now has a web site! To get to the web site, go to: http://www.dot.ca.gov

Notes:

1. Remove the (E) Megaflange, field cut the end of the (E) 12" line as needed and re-attach the Megaflange.

2. Remove the (E) Megaflange, field cut the end of the (E) 6" line as needed and re-attach the Megaflange.

3. Field cut to length the pipe sections between the expansion loops and the valves. Use the Megaflange to allow rotational alignment.

4. The pipes in the OTD are moved 50 mm Northward in relation to the pipes in the Skyway. This is taken up by the loops.

5. For the minor supports (not anchors) use typical support for respective lines but without the kicker element.

6. Pipe supports and embed plates are not shown to the east of the anchors for clarity.

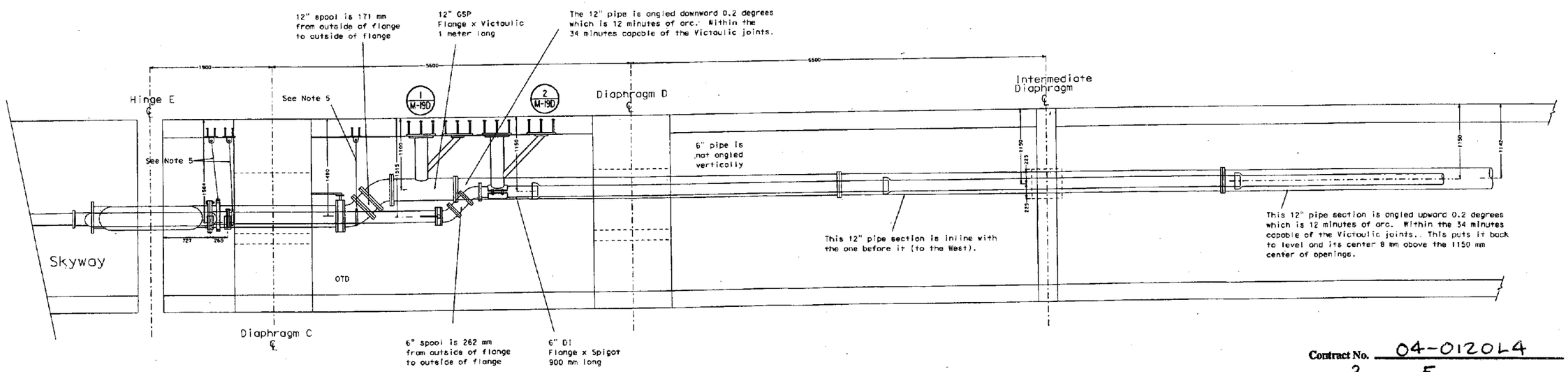

Contract No. 04-0120L4

Page 3 of 5

CCO No. 87 Suppl. No. 0

Contractor MCM

Res. Engr. B. Ghafghazi

1 Elevation View - Water line details near Hinge EW

See Sheet M-19A for Plan View

ALL DIMENSIONS SHOWN IN MILLIMETERS, EXCEPT AS NOTED

DESIGN	BY Michael R. White	CHECKED	
DETAILS	BY Michael R. White	CHECKED	
QUANTITIES	BY	CHECKED	

STATE OF CALIFORNIA DEPARTMENT OF TRANSPORTATION

DIVISION OF ENGINEERING SERVICES ELECTRICAL-MECHANICAL-WATER AND WASTEWATER DESIGN

BRIDGE NO. 34-0006L/R

KM POST 1.6

OAKLAND TOUCHDOWN PHASE 1

Hinge EW pipe details 2

SHEET M-19B

CU 04251

EA 0120L1

DISREGARD PRINTS BEARING EARLIER REVISION DATES → 12/29/08

REVISION DATES (PRELIMINARY STAGE ONLY) SHEET OF

DOS ELEC (10/98)

FILE => M-19B.dgn

DATE PLOTTED => 05-JAN-2009 TIME PLOTTED => 15:23

ORIGINAL SCALE IN MILLIMETERS FOR REDUCED PLANS 0 10 20 30 40 50 60 70 80 90 100

FILE => M-19B.dgn

USERNAME => mwhite DATE PLOTTED => 05-JAN-2009 TIME PLOTTED => 15:23

VI-1

DIST.	COUNTY	ROUTE	KILOMETER POST TOTAL PROJECT	SHEET NO.	TOTAL SHEETS
04	Ala	80	1.6/2.7	369C	643

Caltrans Metric

Michael R. White 12/29/2008
REGISTERED ENGINEER-MECHANICAL DATE

PLANS APPROVAL DATE

REGISTERED PROFESSIONAL ENGINEER Michael R. White No. M29108 Exp. 6/30/10 MECH STATE OF CALIFORNIA

The State of California or its officers or agents shall not be responsible for the accuracy or completeness of electronic copies of this plan sheet.

Caltrans now has a web site! To get to the web site, go to: http://www.dot.ca.gov

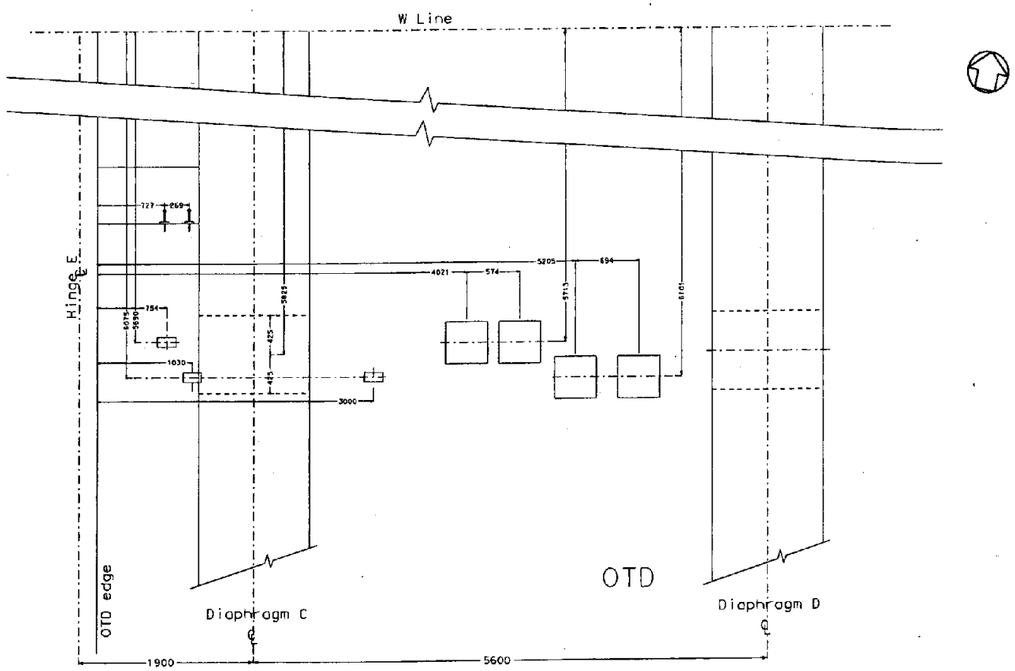

Plan View

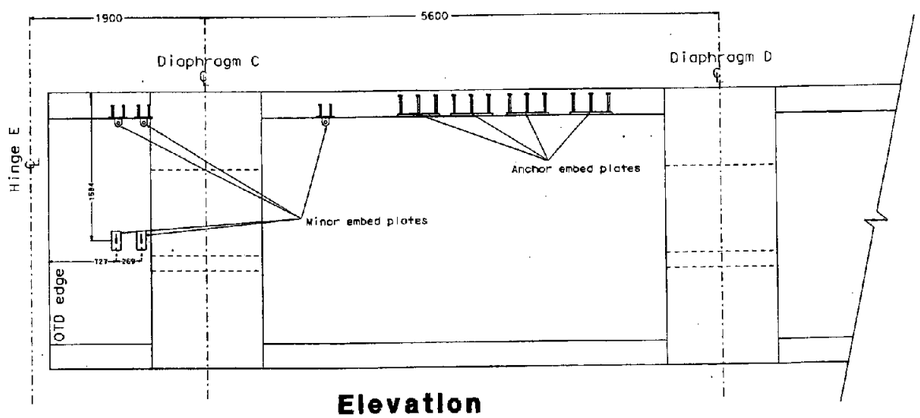

Elevation

(1) Embedment Plate Locations

Notes:

1. The embed plates are the same as those called out by MCM for this purpose.

2. For all minor embed plates west of Diaphragm C, use ones that are sized for the 12" line.

Contract No. 04-0120L4
Page 4 of 5
CCO No. 87 Suppl. No. 0
Contractor MCM
Res. Engr. B. Ghafghazi

ALL DIMENSIONS SHOWN IN MILLIMETERS, EXCEPT AS NOTED

DESIGN	BY Michael R. White	CHECKED
DETAILS	BY Michael R. White	CHECKED
QUANTITIES	BY	CHECKED

STATE OF CALIFORNIA DEPARTMENT OF TRANSPORTATION

DIVISION OF ENGINEERING SERVICES ELECTRICAL-MECHANICAL-WATER AND WASTEWATER DESIGN

CU 04251
EA 0120L1

BRIDGE NO. 34-0006L/R
KM POST 1.6

OAKLAND TOUCHDOWN PHASE 1

Hinge EW pipe details 3

SHEET M-19C

DISREGARD PRINTS BEARING EARLIER REVISION DATES → 12/29/08

REVISION DATES (PRELIMINARY STAGE ONLY) SHEET OF

ORIGINAL SCALE IN MILLIMETERS FOR REDUCED PLANS 0 10 20 30 40 50 60 70 80 90 100

DOS ELEC (10/98) FILE => M-19C.dgn DATE PLOTTED => 05-JAN-2009 TIME PLOTTED => 15:23

FILE => M-19C.dgn

USERNAME => mwhite DATE PLOTTED => 05-JAN-2009 TIME PLOTTED => 15:23

VI=1

DIST.	COUNTY	ROUTE	KILOMETER POST TOTAL PROJECT	SHEET NO.	TOTAL SHEETS
04	Ala	80	1.6/2.7	369D	643

Michael R. White 12/29/2008
REGISTERED ENGINEER-MECHANICAL DATE

PLANS APPROVAL DATE

REGISTERED PROFESSIONAL ENGINEER Michael R. White No. M29108 Exp. 6/30/10 MECH STATE OF CALIFORNIA

The State of California or its officers or agents shall not be responsible for the accuracy or completeness of electronic copies of this plan sheet.

Caltrans now has a web site! To get to the web site, go to: http://www.dot.ca.gov

Caltrans Metric

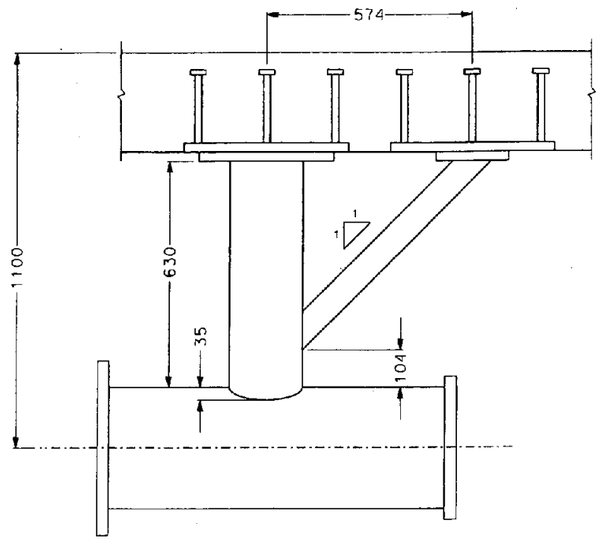

1 **Anchor for 12" Line**

Order the spool unit for the 12" lines as 171 mm outside of flange to outside of flange AND with flanges drilled and tapped for studs.

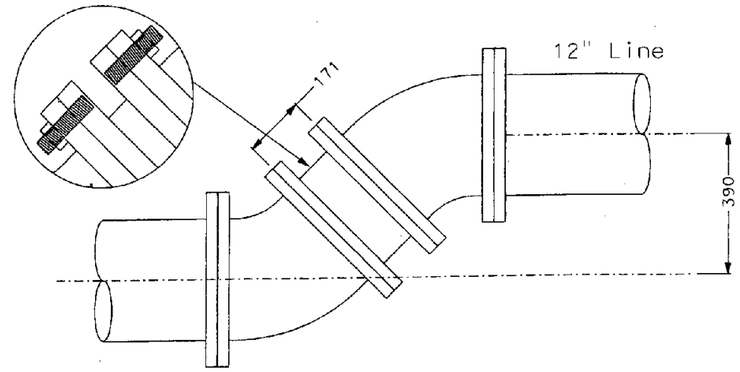

3 **Spool for 12" line offset**

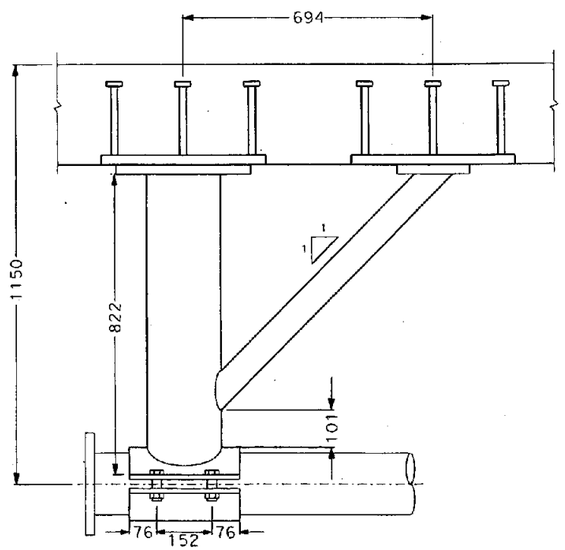

2 **Anchor for 6" Line**

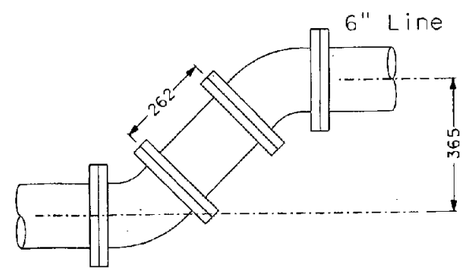

4 **Spool for 6" line offset**

Notes:

1. The embed plates are the same as those called out by the Contractor for this purpose.

2. All 45 degree elbows are standard, off-the-shelf items.

3. The spool for the 12" line is too short to use traditional bolting methods. Order this unit with the flange holes drilled and tapped for threaded studs. Use threadlocking compound to secure the studs into the spool prior to installation.

4. The spool for the 6" line is long enough to use traditional bolting methods.

5. The anchor assemblies shown here differ dimensionally from those shown on the plans provided by the Contractor for this location.

Contract No. 04-0120L4
Page 5 of 5
CCO No. 87 Suppl. No. 0
Contractor MCM
Res. Engr. B. Ghafghazi

ALL DIMENSIONS SHOWN IN MILLIMETERS, EXCEPT AS NOTED

	BY	CHECKED
DESIGN	Michael R. White	
DETAILS	Michael R. White	
QUANTITIES		

STATE OF CALIFORNIA DEPARTMENT OF TRANSPORTATION

DIVISION OF ENGINEERING SERVICES
ELECTRICAL-MECHANICAL-WATER AND WASTEWATER DESIGN

BRIDGE NO. 34-0006L/R
KM POST 1.6

OAKLAND TOUCHDOWN PHASE 1

Hinge EW pipe details 3

SHEET M-19D

CU 04251
EA 0120L1

DISREGARD PRINTS BEARING EARLIER REVISION DATES 12/29/08

REVISION DATES (PRELIMINARY STAGE ONLY) SHEET OF

DOS ELEC (10/98) FILE => M-19D.dgn
DATE PLOTTED => 05-JAN-2009 TIME PLOTTED => 15:23

ORIGINAL SCALE IN MILLIMETERS FOR REDUCED PLANS 0 10 20 30 40 50 60 70 80 90 100

FILE => M-19D.dgn

USERNAME => mwhite DATE PLOTTED => 05-JAN-2009 TIME PLOTTED => 15:23

VI=1

STATE OF CALIFORNIA - DEPARTMENT OF TRANSPORTATION

CONTRACT CHANGE ORDER MEMORANDUM

DATE: 12/10/2008 Page 1 of 1

TO: AMER BATA / BEN GHAFGHAZI	FILE: E.A. 04 - 0120L4
FROM: BEN GHAFGHAZI	CO-RTE-PM ALA-80-1.6/2.7
	FED. NO. NO FED AID
CCO#: 87 SUPPLEMENT#: 0 Category Code: CLPK	CONTINGENCY BALANCE (incl. this change) $8,599,749.20
COST: $75,000.00 INCREASE ☑ DECREASE ☐	HEADQUARTERS APPROVAL REQUIRED? ☐ YES ☑ NO
SUPPLEMENTAL FUNDS PROVIDED: $0.00	IS THIS REQUEST IN ACCORDANCE WITH ENVIRONMENTAL DOCUMENTS? ☑ YES ☐ NO
CCO DESCRIPTION: Install loops for water lines Hinge EW.	**PROJECT DESCRIPTION:** Construct bridge, roadway, building and electrical system.

Original Contract Time:	Time Adj. This Change:	Previously Approved CCO Time Adjustments:	Percentage Time Adjusted: (including this change)	Total # of Unreconciled Deferred Time CCO(s): (including this change)
810 Day(s)	DEF Day(s)	184 Day(s)	23 %	12

THIS CHANGE ORDER PROVIDES FOR:

Installing State furnished expansion loops to connect utility lines between Skyway to Oakland Touch Down structures. Westbound (Bridge No. 34-0006L) expansion loops for 300 mm water line and 150 mm reclaimed water line will be installed. Offset pipes are to be fabricated and installed per details shown on sheets 2 of 5 through 5 of 5 of the CCO. Eastbound (Bridge No. 34-0006R) an expansion loop for 250 mm sewer line will be installed. All work shall be in accordance with Section 10-1.47, "Utility Lines (Bridge)," of the Special Provisions.

This change is necessary because the expansion loops were not installed on the Skyway contract. They were not installed because one end needed to be supported within the Oakland Touch Down structures, which were not ready when the Skyway contract was completed. The materials were purchased on the Skyway contract and stored onsite until for later installation on this contract. The offset pipes on the westbound structure are necessary because the utility lines are not in alignment with each other. The original plans do not show any offset between the utility lines.

This work will be paid as Extra Work at Force Account for $75,000.00, which can be financed from the contingency fund.

This change has been discussed and concurred with Jaime Gutierrez of Project Development, Jack Wheeler of Mechanical Design, and Lina Ellis of Structures Maintenance.

Adjustment of contract time is deferred pending completion of the work specified in this change as it may affect the controlling operation. Determination of a commensurate time extension will be made in accordance with Section 10-1.14, "Progress Schedule (Critical Path Method)," of the Special Provisions and Section 8-1.07, "Liquidated Damages," of the Standard Specifications.

CONCURRED BY:

Construction Engineer:	Ben Ghafghazi	Date	4/13/09
Bridge Engineer:		Date	
Project Engineer:	Jaime Gutierrez	Date	2/4/09
Project Manager:		Date	
FHWA Rep.:		Date	
Environmental:		Date	
Other (specify):	Jack Wheeler, Mechanical Design	Date	1/5/09
Other (specify):	Lina Ellis, Structures Maint.	Date	2/4/09
District Prior Approval By:		Date	
HQ (Issue Approve) By:		Date	
Resident Engineer's Signature:		Date	4/13/09

ESTIMATE OF COST

	THIS REQUEST	TOTAL TO DATE
ITEMS	$0.00	$0.00
FORCE ACCOUNT	$75,000.00	$75,000.00
AGREED PRICE	$0.00	$0.00
ADJUSTMENT	$0.00	$0.00
TOTAL	$75,000.00	$75,000.00

FEDERAL PARTICIPATION

☐ PARTICIPATING ☐ PARTICIPATING IN PART ☑ NONE
☐ NON-PARTICIPATING (MAINTENANCE) ☐ NON-PARTICIPATING

FEDERAL SEGREGATION (if more than one Funding Source or P.I.P. type)
☑ CCO FUNDED PER CONTRACT ☐ CCO FUNDED AS FOLLOWS

FEDERAL FUNDING SOURCE	PERCENT

ADA Notice: For individuals with sensory disabilities, this document is available in alternate formats. For information call: (916) 654-6410 or TDD (916) 654-3880 or write Records and Forms Management, 1120 N Street, MS-89, Sacramento, CA 95814.

STATE OF CALIFORNIA - DEPARTMENT OF TRANSPORTATION

CONTRACT CHANGE ORDER MEMORANDUM

DATE: 4/6/2010

TO: AMER BATA / BEN GHAFGHAZI

FROM: BEN GHAFGHAZI

FILE: **E.A.** 04 - 0120L4
CO-RTE-PM ALA-80-1.6/2.7
FED. NO. NO FED AID

CCO#: **87** | SUPPLEMENT#: **1** | Category Code: **AFZZ**

CONTINGENCY BALANCE (incl. this change) **$2,146,116.40**

COST: **$0.00** INCREASE ☐ DECREASE ☐

HEADQUARTERS APPROVAL REQUIRED? ☐ YES ☑ NO

SUPPLEMENTAL FUNDS PROVIDED: **$0.00**

IS THIS REQUEST IN ACCORDANCE WITH ENVIRONMENTAL DOCUMENTS? ☑ YES ☐ NO

CCO DESCRIPTION:
Time Adjustment of 0 Days.

PROJECT DESCRIPTION:
Construct bridge, roadway, building and electrical system.

Original Contract Time:	Time Adj. This Change:	Previously Approved CCO Time Adjustments:	Percentage Time Adjusted: (including this change)	Total # of Unreconciled Deferred Time CCO(s): (including this change)
810 Day(s)	**0** Day(s)	**184** Day(s)	**23** %	**12**

THIS CHANGE ORDER PROVIDES FOR:
A time adjustment of 0 (zero) working days, in accordance with Section 8-1.07, "Liquidated Damages", of the Standard Specifications.

It has been determined that the work of Contract Change Order No. 87 has had no impact on the contractor's controlling operation. Therefore, a time extension of 0 days is recommended.

Total Time Adjustment = 0 Days

CONCURRED BY:

Construction Engineer:	Ben Ghafghazi	Date 4/7/2010
Bridge Engineer:		Date
Project Engineer:		Date
Project Manager:		Date
FHWA Rep.:		Date
Environmental:		Date
Other (specify):		Date
Other (specify):		Date
District Prior Approval By:		Date
HQ (Issue Approve) By:		Date
Resident Engineer's Signature:		Date 4/7/2010

ESTIMATE OF COST

	THIS REQUEST	TOTAL TO DATE
ITEMS	$0.00	$0.00
FORCE ACCOUNT	$0.00	$75,000.00
AGREED PRICE	$0.00	$0.00
ADJUSTMENT	$0.00	$0.00
TOTAL	$0.00	$75,000.00

FEDERAL PARTICIPATION

☐ PARTICIPATING ☐ PARTICIPATING IN PART ☑ NONE
☐ NON-PARTICIPATING (MAINTENANCE) ☐ NON-PARTICIPATING

FEDERAL SEGREGATION (if more than one Funding Source or P.I.P. type)
☑ CCO FUNDED PER CONTRACT ☐ CCO FUNDED AS FOLLOWS

FEDERAL FUNDING SOURCE	PERCENT

ADA Notice: For individuals with sensory disabilities, this document is available in alternate formats. For information call: (916) 654-6410 or TDD (916) 654-3880 or write Records and Forms Management, 1120 N Street, MS-89, Sacramento, CA 95814.

STATE OF CALIFORNIA - DEPARTMENT OF TRANSPORTATION

CONTRACT CHANGE ORDER

Change Requested by: Engineer

CCO: 87	Suppl. No. 1	Contract No. 04 - 0120L4	Road ALA-80-1.6/2.7	FED. AID LOC.: NO FED AID

To: **M C M CONSTRUCTION INC**

You are directed to make the following changes from the plans and specifications or do the following described work not included in the plans and specifications for this contract. ***NOTE: This change order is not effective until approved by the Engineer.***

Description of work to be done, estimate of quantities and prices to be paid. (Segregate between additional work at contract price, agreed price and force account.) Unless otherwise stated, rates for rental of equipment cover only such time as equipment is actually used and no allowance will be made for idle time. This last percentage shown is the net accumulated increase or decrease from the original quantity in the Engineer's Estimate.

TIME ADJUSTMENT:

A determination of the delay in completion of the contract due to the work specified by Contract Change Order No. 87 has been made in accordance with the provisions of Section 8-1.07 of the Standard Specifications.

Time Adjustment = 0 Days

Acceptance of this change order constitutes an agreement of full resolution of all time impact costs resulting from Change Order No. 87.

This change order acts to resolve the deferred time issued on Change Order No. 87, and no additional time shall be granted.

Estimated Cost: Increase ☐ **Decrease** ☐ **$0.00**

By reason of this order the time of completion will be adjusted as follows: 0 days

Signature	**Resident Engineer** Ben Ghafghazi	**Date** 4/7/2010
Signature	**Construction Engineer** Amer Bata	**Date** 4/8/2010
Signature	**Construction Manager** Amer Bata	**Date** 7/14/10

We the undersigned contractor, have given careful consideration to the change proposed and agree, if this proposal is approved, that we will provide all equipment, furnish the materials, except as may otherwise be noted above, and perform all services necessary for the work above specified, and will accept as full payment therefor the prices shown above.

NOTE: If you, the contractor, do not sign acceptance of this order, your attention is directed to the requirements of the specifications as to proceeding with the ordered work and filing a written protest within the time therein specified.

Signature	**(Print name and title)** JAMES A. CARTER, PRESIDENT	**Date** 7/14/10

STATE OF CALIFORNIA - DEPARTMENT OF TRANSPORTATION

CONTRACT CHANGE ORDER

Change Requested by: Engineer

CCO 88	Suppl. No. 0	Contract No. 04 - 0120L4	Road ALA-80-1.6/2.7	FED. AID LOC.: NO FED AID

M C M CONSTRUCTION INC

You are directed to make the following changes from the plans and specifications or do the following described work not included in the plans and specifications for this contract. ***NOTE: This change order is not effective until approved by the Engineer.***

Description of work to be done, estimate of quantities and prices to be paid. (Segregate between additional work at contract price, agreed price and force account.) Unless otherwise stated, rates for rental of equipment cover only such time as equipment is actually used and no allowance will be made for idle time. This last percentage shown is the net accumulated increase or decrease from the original quantity in the Engineer's Estimate.

Extra Work at Lump Sum:

Install 19 mm Bluestop waterstop as approved by the Engineer at the Mole substation. Waterstop shall be placed between foundation, walls, and floor. Exact location will be determined in the field. Placement shall be in accordance with manufacturer's instructions and as determined by the Engineer.

Estimated cost of Extra Work at Lump Sum $2,673.00

Estimated Cost: Increase ☑ **Decrease** ☐ **$2,673.00**

By reason of this order the time of completion will be adjusted as follows: 0 days

Submitted by

Signature	Resident Engineer BEN GHAFGHAZI	Date 12/17/08

Approval Recommended by

Signature	Construction Engineer Ben Ghafghazi	Date 12/17/08

Engineer Approval by

Signature	Construction Engineer Ben Ghafghazi	Date 6/1/09

We the undersigned contractor, have given careful consideration to the change proposed and agree, if this proposal is approved, that we will provide all equipment, furnish the materials, except as may otherwise be noted above, and perform all services necessary for the work above specified, and will accept as full payment therefor the prices shown above.

NOTE: If you, the contractor, do not sign acceptance of this order, your attention is directed to the requirements of the specifications as to proceeding with the ordered work and filing a written protest within the time therein specified.

Contractor Acceptance by

Signature	(Print name and title) EDMUNDO A. PUCHI, TREASURER	Date 5/26/09

STATE OF CALIFORNIA - DEPARTMENT OF TRANSPORTATION

CONTRACT CHANGE ORDER MEMORANDUM

TO: AMER BATA / BEN GHAFGHAZI	FILE: E.A. 04 - 0120L4
FROM: BEN GHAFGHAZI	CO-RTE-PM ALA-80-1.6/2.7
	FED. NO. NO FED AID
CCO#: 88 SUPPLEMENT#: 0 Category Code: CAPX	CONTINGENCY BALANCE (incl. this change) $9,820,783.20
COST: $2,673.00 INCREASE ☑ DECREASE ☐	HEADQUARTERS APPROVAL REQUIRED? ☐ YES ☑ NO
SUPPLEMENTAL FUNDS PROVIDED: $0.00	IS THIS REQUEST IN ACCORDANCE WITH ENVIRONMENTAL DOCUMENTS? ☑ YES ☐ NO
CCO DESCRIPTION: Install waterstop on mole substation.	**PROJECT DESCRIPTION:** Construct bridge, roadway, building and electrical system.

Original Contract Time:	Time Adj. This Change:	Previously Approved CCO Time Adjustments:	Percentage Time Adjusted: (including this change)	Total # of Unreconciled Deferred Time CCO(s): (including this change)
810 Day(s)	0 Day(s)	9 Day(s)	1 %	6

THIS CHANGE ORDER PROVIDES FOR:

Installation of 19 mm Bluestop waterstop as approved by the Engineer at the Mole substation. Waterstop will be placed between foundation, walls, and floor. Exact location will be determined in the field. Placement shall be in accordance with manufacturer's instructions and as determined by the Engineer.

This change is necessary to prevent seepage of water into the building from external sources. The freeway side of the building has no drainage and is an area where runoff may collect along the wall. There is also a concern that groundwater may seep into the building. By placing the waterstop at the joint of the foundation, walls, and floor the path for water to enter the building will be blocked.

This work will be paid as Extra Work at Agreed Lump Sum of $2,673.00, which can be financed from the contingency fund. This sum constitutes full compensation, including markups, for this change. A detailed cost analysis is on file in the Resident Engineer's office.

This change has been discussed and concurred with Jaime Gutierrez of Project Development and Lina Ellis of Structures Maintenance.

No adjustment of contract time is warranted since this change does not affect the controlling operation.

CONCURRED BY:		
Construction Engineer:	Ben Ghafghazi	Date 12/17/08
Bridge Engineer:		Date
Project Engineer:	Jaime Gutierrez	Date 12/15/08
Project Manager:		Date
FHWA Rep.:		Date
Environmental:		Date
Other (specify):	Lina Ellis, Structures Maint.	Date 12/17/08
Other (specify):		Date
District Prior Approval By:		Date
HQ (Issue Approve) By:		Date
Resident Engineer's Signature:		Date 12/17/08

ESTIMATE OF COST

	THIS REQUEST	TOTAL TO DATE
ITEMS	$0.00	$0.00
FORCE ACCOUNT	$0.00	$0.00
AGREED PRICE	$2,673.00	$2,673.00
ADJUSTMENT	$0.00	$0.00
TOTAL	$2,673.00	$2,673.00

FEDERAL PARTICIPATION

☐ PARTICIPATING ☐ PARTICIPATING IN PART ☑ NONE
☐ NON-PARTICIPATING (MAINTENANCE) ☐ NON-PARTICIPATING

FEDERAL SEGREGATION (if more than one Funding Source or P.I.P. type)
☑ CCO FUNDED PER CONTRACT ☐ CCO FUNDED AS FOLLOWS

FEDERAL FUNDING SOURCE	PERCENT

ADA Notice: For individuals with sensory disabilities, this document is available in alternate formats. For information call: (916) 654-6410 or TDD (916) 654-3880 or write Records and Forms Management, 1120 N Street, MS-89, Sacramento, CA 95814.

CONTRACT CHANGE ORDER

Change Requested by: Engineer

CCO 89	Suppl. No. 0	Contract No. 04 - 0120L4	Road ALA-80-1.6/2.7	FED. AID LOC.: NO FED AID

M C M CONSTRUCTION INC

You are directed to make the following changes from the plans and specifications or do the following described work not included in the plans and specifications for this contract. ***NOTE: This change order is not effective until approved by the Engineer.***

Description of work to be done, estimate of quantities and prices to be paid. (Segregate between additional work at contract price, agreed price and force account.) Unless otherwise stated, rates for rental of equipment cover only such time as equipment is actually used and no allowance will be made for idle time. This last percentage shown is the net accumulated increase or decrease from the original quantity in the Engineer's Estimate.

Revise the 6th and 8th paragraphs of Section 10-1.42, "Lightweight Embankment Material (Cellular Concrete)," of Special Provisions as shown on sheets 2 of 3 and 3 of 3 of this CCO.

There shall be no additional cost for this CCO.

Estimated Cost: **Increase** ☐ **Decrease** ☐ **$0.00**

By reason of this order the time of completion will be adjusted as follows: 0 days

Submitted by

Signature	Resident Engineer BEN GHAFGHAZI	Date 12/15/08

Approval Recommended by

Signature	Construction Manager Amer Bata	Date 12/17/08

Engineer Approval by

Signature	Construction Manager Amer Bata	Date 4/30/09

We the undersigned contractor, have given careful consideration to the change proposed and agree, if this proposal is approved, that we will provide all equipment, furnish the materials, except as may otherwise be noted above, and perform all services necessary for the work above specified, and will accept as full payment therefor the prices shown above.

NOTE: If you, the contractor, do not sign acceptance of this order, your attention is directed to the requirements of the specifications as to proceeding with the ordered work and filing a written protest within the time therein specified.

Contractor Acceptance by

Signature	(Print name and title) EDMUNDO A. PUCHI, TREASURER	Date 4/28/09

EA: 04-0120L4
DATE: November 19, 2008

10-1.42 LIGHTWEIGHT EMBANKMENT MATERIAL (CELLULAR CONCRETE)

This work shall consist of constructing a lightweight embankment material (cellular concrete) to the lines, grades, and dimensions shown on the plans, in accordance with the Standard Specifications, these special provisions and as directed by the Engineer.

The Contractor shall furnish a mix design which will produce a cast density (at point of placement) of 3.7 to 5.6 kN/m^3 with a minimum compressive strength of 551 kPa at 28 days, respectively. The Contractor shall provide the Engineer with a Work Plan, including the equipment and procedures proposed, including working drawings for form work for the lightweight embankment material (cellular concrete), at least 30 working days prior to placement; items in the submittal shall include:

1. Material list of items; manufacturer's specifications for those items.
2. Mix design(s), including laboratory data using the mix design verifying mass and strength requirements.
3. Form work for the installation of the lightweight embankment material (cellular concrete), including permanent structure and temporary form systems, shall conform to the manufacture's specifications.
   Form work shall be water tight and must be capable of supporting lateral loads of 3 times the calculated load of the lightweight embankment material (cellular concrete).
4. Working drawings for the form work shall conform to the provision in "Working Drawings," of these special provisions and be subject to the Engineer approval.

Admixtures for accelerating the set time may be used in accordance with the manufacturer's recommendations. A foaming agent shall be used and shall be tested in accordance with ASTM C 796. Mixing water shall be potable and free of deleterious amounts of acids, alkali, salts, oils, and organic materials which would adversely affect the setting or strength of the Lightweight Embankment Material (cellular concrete).

Portland Cement shall comply with ASTM C150, Types I, II, or III. Pozzolans and other cementitious materials may be used when specifically approved by the manufacturer of the foaming agent.

At the point of placement, the density shall be in accordance with the specified cast density. A single cast density test shall represent the lesser of 1000 cubic meters or one day's production.

The compressive strength shall be tested in accordance with ASTM C 495 except as follows:

1. Unless otherwise approved by the Engineer, the specimens shall be 76.2 mm by 152.4 mm cylinders. During molding, the Contractor shall place the cellular concrete in two approximately equal layers~~, and raise and drop the cylinders approximately 25 mm three times on a hard surface after placing each layer~~; no rodding shall be allowed. Specimens shall be covered and protected immediately after casting to prevent damage and loss of moisture.
2. Specimens shall be moist cured in the molds ~~for a period of seven (7) days~~ prior to the 28-day compressive strength test. Specimens shall not be oven dried.

Lightweight embankment material (cellular concrete) shall be placed to the designated dimensions and grades as shown in the plans and as directed by the Engineer.

Lift thickness for lightweight embankment material (cellular concrete) shall not exceed 1.2 m. After curing for 12 hours, any crumbling area on the surface should be removed ~~and scarified before the next layer is placed~~. Surface stepping shall be limited to 150 mm.

A minimum 12-hour waiting time between lifts shall be required. If ambient temperatures are anticipated to be below 4.5 °C within 24 hours after placement, the mixing water should be heated when specifically approved by the manufacturer of the foaming agent, or placement shall be prohibited during such period. Placement shall not be allowed on frozen ground.

Lightweight embankment material (cellular concrete) shall be job site batched, mixed with the foaming agent, and placed with specialized equipment certified by the manufacturer. Slurry coats and multilayer casting are acceptable methods of installation. Subgrade to receive lightweight embankment material (cellular concrete) shall be free of all loose and extraneous material. Subgrade shall be uniformly moist, and any excess water standing on the surface shall be removed prior to placing lightweight embankment material (cellular concrete).

MEASUREMENT AND PAYMENT

Pay quantities for lightweight embankment material (cellular concrete) will be measured by the cubic meter, to the lines and grade shown on the plans and as directed by the Engineer.

The contract price paid per cubic meter for lightweight embankment material (cellular concrete) shall include full compensation for furnishing all labor, materials, tools, equipment, and incidentals, and for doing all the work involved in furnishing and placing the lightweight embankment material (cellular concrete), complete in place, as shown on the plans, as specified in the Standard Specifications and these special provisions, and as directed by the Engineer.

Full compensation for providing form work and work plan involved in placing the lightweight embankment material (cellular concrete) shall be considered as included in the contract price paid per cubic meter for lightweight embankment material (cellular concrete) and no separate payment will be made therefor.

STATE OF CALIFORNIA - DEPARTMENT OF TRANSPORTATION

CONTRACT CHANGE ORDER MEMORANDUM

DATE: 12/15/2008 Page 1 of 1

TO: AMER BATA / BEN GHAFGHAZI	FILE: E.A. 04 - 0120L4
FROM: BEN GHAFGHAZI	CO-RTE-PM ALA-80-1.6/2.7
	FED. NO. NO FED AID
CCO#: 89 SUPPLEMENT#: 0 Category Code: CXSA	CONTINGENCY BALANCE (incl. this change) $9,820,783.20
COST: $0.00 INCREASE ☐ DECREASE ☐	HEADQUARTERS APPROVAL REQUIRED? ☑ YES ☐ NO
SUPPLEMENTAL FUNDS PROVIDED: $0.00	IS THIS REQUEST IN ACCORDANCE WITH ENVIRONMENTAL DOCUMENTS? ☑ YES ☐ NO
CCO DESCRIPTION: Revise cellular concrete specification.	**PROJECT DESCRIPTION:** Construct bridge, roadway, building and electrical system.

Original Contract Time:	Time Adj. This Change:	Previously Approved CCO Time Adjustments:	Percentage Time Adjusted: (including this change)	Total # of Unreconciled Deferred Time CCO(s): (including this change)
810 Day(s)	0 Day(s)	9 Day(s)	1 %	6

THIS CHANGE ORDER PROVIDES FOR:

Revising the 6th and 8th paragraphs of Section 10-1.42, "Lightweight Embankment Material (Cellular Concrete)," of Special Provisions as shown on sheets 2 of 3 and 3 of 3 of the CCO.

This change was requested by Jaime Gutierrez, Branch Chief, Office of Toll Bridge Design (memo attached). This change is necessary to correct the Special Provisions. The final set of Special Provisions that went out for bid has a version of cellular concrete specifications that was different than Geotechnical's final version. This CCO will revise the specification to the correct version.

There shall be no additional cost for this CCO.

This change has been discussed and concurred with John O'Leary and John Vitorelo of Geotechnical. Maintenance concurrence is not necessary because the changes are related to testing and construction procedure. No change is being made to material properties.

No adjustment of contract time is warranted since this change does not affect the controlling operation.

CONCURRED BY:		
Construction Engineer:	Ben Ghafghazi	Date 12/15/08
Bridge Engineer:		Date
Project Engineer:	Jaime Gutierrez	Date 11/19/08
Project Manager:		Date
FHWA Rep.:		Date
Environmental:		Date
Other (specify):	John O'Leary, Geotechnical	Date 11/19/08
Other (specify):	John Vitorelo, Geotechnical	Date 11/19/08
District Prior Approval By:		Date
HQ (Issue Approve) By:		Date
Resident Engineer's Signature:		Date 12/15/08

ESTIMATE OF COST

	THIS REQUEST	TOTAL TO DATE
ITEMS	$0.00	$0.00
FORCE ACCOUNT	$0.00	$0.00
AGREED PRICE	$0.00	$0.00
ADJUSTMENT	$0.00	$0.00
TOTAL	$0.00	$0.00

FEDERAL PARTICIPATION

☐ PARTICIPATING ☐ PARTICIPATING IN PART ☑ NONE
☐ NON-PARTICIPATING (MAINTENANCE) ☐ NON-PARTICIPATING

FEDERAL SEGREGATION (If more than one Funding Source or P.I.P. type)
☑ CCO FUNDED PER CONTRACT ☑ CCO FUNDED AS FOLLOWS

FEDERAL FUNDING SOURCE	PERCENT

ADA Notice: For individuals with sensory disabilities, this document is available in alternate formats. For information call: (916) 654-6410 or TDD (916) 654-3880 or write Records and Forms Management, 1120 N Street, MS-89, Sacramento, CA 95814.

CONTRACT CHANGE ORDER

Change Requested by: Engineer

CCO 90	Suppl. No. 0	Contract No. 04 - 0120L4	Road ALA-80-1.6/2.7	FED. AID LOC.: NO FED AID

M C M CONSTRUCTION INC

You are directed to make the following changes from the plans and specifications or do the following described work not included in the plans and specifications for this contract. ***NOTE: This change order is not effective until approved by the Engineer.***

Description of work to be done, estimate of quantities and prices to be paid. (Segregate between additional work at contract price, agreed price and force account.) Unless otherwise stated, rates for rental of equipment cover only such time as equipment is actually used and no allowance will be made for idle time. This last percentage shown is the net accumulated increase or decrease from the original quantity in the Engineer's Estimate.

Revise Drainage System #3 to match flowline of existing culvert at W87+95. Delete installation of 450 mm plastic pipe per contract plans and install as shown on sheet 2 of 2 of this CCO.

Estimate of Decrease in Contract Item at Contract Price:

Item No. 141: 450 MM PLASTIC PIPE

-25 M (–54.35%) $520.00 /M = –$13,000.00 (–54.35%)

Decrease in Contract Item.....($13,000.00)

Payment for quantities of Item #141, 450 mm Plastic Pipe, decreased in excess of 25% of the Engineer's Estimate will be adjusted in accordance with Section 4-1.03B(2), "Decreases of More Than 25 Percent", of the Standard Specifications. Determination of the adjustment is deferred until completion of work on this item.

Extra Work at Force Account:

Remove and dispose of existing 450 mm plastic pipe at W 87+95. Fill resultant depression with 19 mm crushed gravel to FL 0.450 m. Connect new 450 mm plastic pipe to existing culvert and discharge through rock slope protection (RSP) as shown on sheet 2 of 2 of this CCO. Approximate length of pipe is 36 m. Remove and replace RSP as necessary for installation of pipe. This work shall be in accordance with Section 10-1.80, "Plastic Pipe," of the Special Provisions.

Estimated cost of Extra Work at Force Account $25,000.00

Estimated Cost: Increase ☑ **Decrease** ☐ **$12,000.00**

By reason of this order the time of completion will be adjusted as follows: 0 days

Submitted by		
Signature	Resident Engineer BEN GHAFGHAZI	Date 12/19/08
Approval Recommended by		
Signature	Construction Engineer Ben Ghafghazi	Date 12/19/08
Engineer Approval by		
Signature	Construction Engineer Ben Ghafghazi	Date 5/1/09

We the undersigned contractor, have given careful consideration to the change proposed and agree, if this proposal is approved, that we will provide all equipment, furnish the materials, except as may otherwise be noted above, and perform all services necessary for the work above specified, and will accept as full payment therefor the prices shown above.

NOTE: If you, the contractor, do not sign acceptance of this order, your attention is directed to the requirements of the specifications as to proceeding with the ordered work and filing a written protest within the time therein specified.

Contractor Acceptance by		
Signature	(Print name and title) EDMUNDO A. PUCHI, TREASURER	Date 4/29/08

EA: 04-0120L4

DATE: DEC 16, 2008

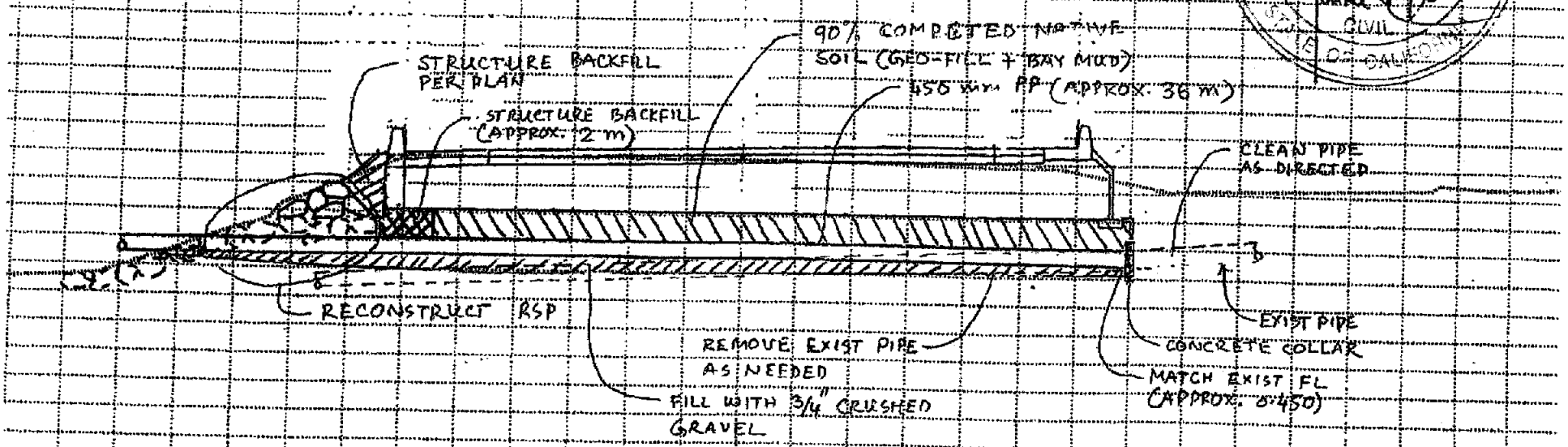

DRAINAGE SYSTEM NO. 3

Contract No. 04-0120L4

Page 2 of 2

CCO No. 90 Suppl. No.

Contractor MCM

Res. Engr. B. Ghafghazi

STATE OF CALIFORNIA - DEPARTMENT OF TRANSPORTATION

CONTRACT CHANGE ORDER MEMORANDUM

DATE: 12/17/2008 Page 1 of 1

TO: AMER BATA / BEN GHAFGHAZI	FILE: E.A. 04 - 0120L4
FROM: BEN GHAFGHAZI	CO-RTE-PM ALA-80-1.6/2.7
	FED. NO. NO FED AID
CCO#: 90 SUPPLEMENT#: 0 Category Code: CCPX	CONTINGENCY BALANCE (incl. this change) $9,790,869.20
COST: $12,000.00 INCREASE ☑ DECREASE ☐	HEADQUARTERS APPROVAL REQUIRED? ☐ YES ☑ NO
SUPPLEMENTAL FUNDS PROVIDED: $0.00	IS THIS REQUEST IN ACCORDANCE WITH ENVIRONMENTAL DOCUMENTS? ☑ YES ☐ NO
CCO DESCRIPTION: Revise DS #3.	**PROJECT DESCRIPTION:** Construct bridge, roadway, building and electrical system.

Original Contract Time:	Time Adj. This Change:	Previously Approved CCO Time Adjustments:	Percentage Time Adjusted: (including this change)	Total # of Unreconciled Deferred Time CCO(s): (including this change)
810 Day(s)	0 Day(s)	178 Day(s)	22 %	1

THIS CHANGE ORDER PROVIDES FOR:

Revising Drainage System #3 to match flowline of existing culvert at W87+95. Delete installation of 450 mm plastic pipe per contract plans and install as shown on sheet 2 of 2 of this CCO.

This change is necessary because the flowline of the existing culvert is at elevation 0.450 m, not 1.172 m as shown on the contract plans. The outlet of the existing culvert is covered by sand and the system is not functional. The drainage system will be made functional by removing and disposing of existing 450 mm plastic pipe at W 87+95, filling resultant depression with 19 mm crushed gravel to FL 0.450 m, connecting new 450 mm plastic pipe to existing culvert, and discharging through rock slope protection (RSP) as shown on sheet 2 of 2 of this CCO. RSP will be removed and replaced as necessary for installation of pipe. This work will be in accordance with Section 10-1.80, "Plastic Pipe," of the Special Provisions.

This work will be performed by decreasing Item #141, 450 mm Plastic Pipe, and extra work at force account for $25,000.00, which can be financed from the contingency fund. This work is not being performed at item price because the extent of the work to install the revised system has significantly increased over the original contract plans.

This change has been discussed and concurred with Jaime Gutierrez of Project Development, and Garjong Fong of Hydraulics. Maintenance concurrence is not necessary because this drainage system is temporary. The system is going to be abandoned on the OTD-2 project, EA 0120M4.

No adjustment of contract time is warranted since this change does not affect the controlling operation.

CONCURRED BY:		
Construction Engineer:	Ben Ghafghazi	Date 12/19/08
Bridge Engineer:		Date
Project Engineer:	Jaime Gutierrez	Date 12/16/08
Project Manager:		Date
FHWA Rep.:		Date
Environmental:		Date
Other (specify):	Garjong Fong, Hydraulics	Date 12/16/08
Other (specify):		Date
District Prior Approval By:		Date
HQ (Issue Approve) By:		Date
Resident Engineer's Signature:		Date 12/19/08

ESTIMATE OF COST

	THIS REQUEST	TOTAL TO DATE
ITEMS	($13,000.00)	($13,000.00)
FORCE ACCOUNT	$25,000.00	$25,000.00
AGREED PRICE	$0.00	$0.00
ADJUSTMENT	$0.00	$0.00
TOTAL	$12,000.00	$12,000.00

FEDERAL PARTICIPATION

☐ PARTICIPATING ☐ PARTICIPATING IN PART ☑ NONE
☐ NON-PARTICIPATING (MAINTENANCE) ☐ NON-PARTICIPATING

FEDERAL SEGREGATION (if more than one Funding Source or P.I.P. type)
☑ CCO FUNDED PER CONTRACT ☐ CCO FUNDED AS FOLLOWS

FEDERAL FUNDING SOURCE	PERCENT

ADA Notice: For individuals with sensory disabilities, this document is available in alternate formats. For information call: (916) 654-6410 or TDD (916) 654-3880 or write Records and Forms Management, 1120 N Street, MS-89, Sacramento, CA 95814.

STATE OF CALIFORNIA - DEPARTMENT OF TRANSPORTATION

CONTRACT CHANGE ORDER

Change Requested by: Engineer

CCO 91	Suppl. No. 0	Contract No. 04 - 0120L4	Road ALA-80-1.6/2.7	FED. AID LOC.: NO FED AID

M C M CONSTRUCTION INC

You are directed to make the following changes from the plans and specifications or do the following described work not included in the plans and specifications for this contract. ***NOTE: This change order is not effective until approved by the Engineer.***

Description of work to be done, estimate of quantities and prices to be paid. (Segregate between additional work at contract price, agreed price and force account.) Unless otherwise stated, rates for rental of equipment cover only such time as equipment is actually used and no allowance will be made for idle time. This last percentage shown is the net accumulated increase or decrease from the original quantity in the Engineer's Estimate.

Construct foundation for precast wall on north side of westbound roadway in accordance with procedure below:

Extra Work at Force Account:

Left of W-line within roadway limits at locations where original ground elevation is below the bottom of the foundation, fill area to bottom of foundation with 95% crushed 9.5 mm pea gravel. Extend gravel fill to rock slope protection (RSP). Filter fabric shall be placed between gravel fill and RSP. Details are on sheet 2 of 2 of this CCO. Limits of work will be determined in the field. Filter fabric shall conform to requirements of Section 10-1.88, "Geotextile Filter Fabric," of the Special Provisions.

Estimated cost of Extra Work at Force Account $15,000.00

Estimated Cost: Increase ☑ **Decrease** ☐ **$15,000.00**

By reason of this order the time of completion will be adjusted as follows: 0 days

Submitted by		
Signature	Resident Engineer BEN GHAFGHAZI	Date 12/19/08
Approval Recommended by		
Signature	Construction Engineer Ben Ghafghazi	Date 12/19/08
Engineer Approval by		
Signature	Construction Engineer Ben Ghafghazi	Date 1/29/09

We the undersigned contractor, have given careful consideration to the change proposed and agree, if this proposal is approved, that we will provide all equipment, furnish the materials, except as may otherwise be noted above, and perform all services necessary for the work above specified, and will accept as full payment therefor the prices shown above.

NOTE: If you, the contractor, do not sign acceptance of this order, your attention is directed to the requirements of the specifications as to proceeding with the ordered work and filing a written protest within the time therein specified.

Contractor Acceptance by		
Signature	(Print name and title) EDMUNDO A. PUCHI, TREASURER	Date 1/21/09

EA 04-0120L4
DATE 12/18/08

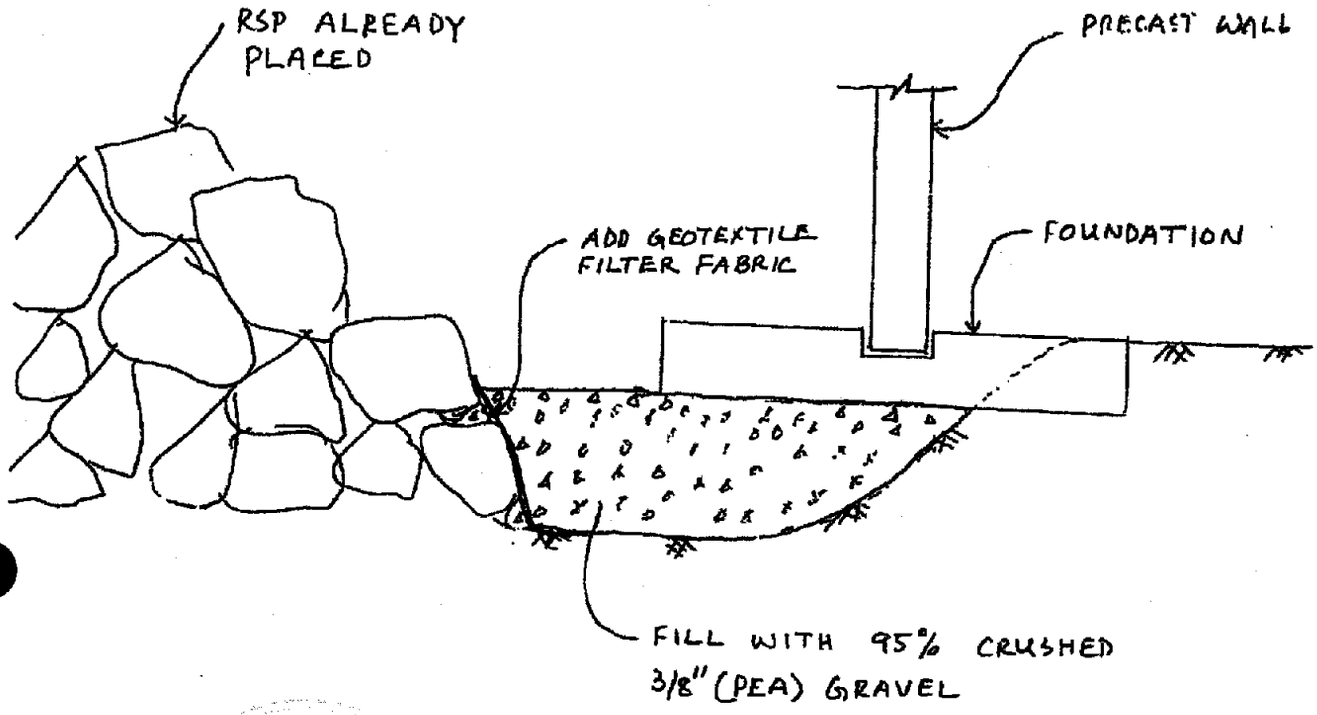

12/31/9
[illegible]

Contract No. 04-0120L4
Page 2 of 2
CCO No. 91 Suppl. No. _____
Contractor MCM
Res. Engr. B. Grafghazi

STATE OF CALIFORNIA - DEPARTMENT OF TRANSPORTATION

CONTRACT CHANGE ORDER MEMORANDUM

DATE: 12/17/2008 Page 1 of 1

TO: AMER BATA / BEN GHAFGHAZI	FILE: E.A. 04 - 0120L4
FROM: BEN GHAFGHAZI	CO-RTE-PM ALA-80-1.6/2.7
	FED. NO. NO FED AID
CCO#: 91 SUPPLEMENT#: 0 Category Code: CMPX	CONTINGENCY BALANCE (incl. this change) $9,790,783.20
COST: $15,000.00 INCREASE ☑ DECREASE ☐	HEADQUARTERS APPROVAL REQUIRED? ☐ YES ☑ NO
SUPPLEMENTAL FUNDS PROVIDED: $0.00	IS THIS REQUEST IN ACCORDANCE WITH ENVIRONMENTAL DOCUMENTS? ☑ YES ☐ NO
CCO DESCRIPTION: Precast wall foundation subgrade.	**PROJECT DESCRIPTION:** Construct bridge, roadway, building and electrical system.

Original Contract Time:	Time Adj. This Change:	Previously Approved CCO Time Adjustments:	Percentage Time Adjusted: (including this change)	Total # of Unreconciled Deferred Time CCO(s): (including this change)
810 Day(s)	0 Day(s)	178 Day(s)	22 %	1

THIS CHANGE ORDER PROVIDES FOR:

Preparing the subgrade for the foundation of the precast wall on the north side of the westbound roadway at locations where original ground elevation is below the bottom of the foundation by filling area to bottom of foundation with 95% crushed 9.5 mm pea gravel. The gravel fill will be extended to the rock slope protection (RSP). Filter fabric will be placed between gravel fill and RSP. Details are on sheet 2 of 2 of the CCO. Limits of work will be determined in the field. Filter fabric shall conform to requirements of Section 10-1.88, "Geotextile Filter Fabric," of the Special Provisions.

This change is necessary because the original ground was exposed to the bay and has been eroded away due to wave and tidal action. The erosion has caused parts of the original ground to be lower than the bottom of the footing, which requires filling these areas to be filled before the footing can be placed. The fill with crushed gravel will stabilized the area in order to have a stable footing for the precast wall foundation and will be resistant to erosion. Additional RSP is being placed per contract which will also prevent future erosion.

This work will be paid as Extra Work at Force Account for $15,000.00, which can be financed from the contingency fund.

This change has been discussed and concurred with Jaime Gutierrez of Project Development, and John O'Leary and John Vitorelo of Geotechnical. Maintenance concurrence is not necessary because there are no changes being made to the wall, embankment, or RSP

No adjustment of contract time is warranted since this change does not affect the controlling operation.

CONCURRED BY:		
Construction Engineer:	Ben Ghafghazi	Date 12/19/08
Bridge Engineer:		Date
Project Engineer:	Jaime Gutierrez	Date 12/8/08
Project Manager:		Date
FHWA Rep.:		Date
Environmental:		Date
Other (specify):	John O'Leary, Geotechnical	Date 12/8/08
Other (specify):	John Vitorelo, Geotechnical	Date 12/8/08
District Prior Approval By:		Date
HQ (Issue Approve) By:		Date
Resident Engineer's Signature:		Date 12/19/08

ESTIMATE OF COST

	THIS REQUEST	TOTAL TO DATE
ITEMS	$0.00	$0.00
FORCE ACCOUNT	$15,000.00	$15,000.00
AGREED PRICE	$0.00	$0.00
ADJUSTMENT	$0.00	$0.00
TOTAL	$15,000.00	$15,000.00

FEDERAL PARTICIPATION

☐ PARTICIPATING ☐ PARTICIPATING IN PART ☑ NONE
☐ NON-PARTICIPATING (MAINTENANCE) ☐ NON-PARTICIPATING

FEDERAL SEGREGATION (if more than one Funding Source or P.I.P. type)
☑ CCO FUNDED PER CONTRACT ☐ CCO FUNDED AS FOLLOWS

FEDERAL FUNDING SOURCE	PERCENT

ADA Notice: For individuals with sensory disabilities, this document is available in alternate formats. For information call: (916) 654-6410 or TDD (916) 654-3880 or write Records and Forms Management, 1120 N Street, MS-89, Sacramento, CA 95814.

STATE OF CALIFORNIA - DEPARTMENT OF TRANSPORTATION

CONTRACT CHANGE ORDER

Change Requested by: Engineer

92	Suppl. No. 0	Contract No. 04 - 0120L4	Road ALA-80-1.6/2.7	FED. AID LOC.: NO FED AID

To: **M C M CONSTRUCTION INC**

You are directed to make the following changes from the plans and specifications or do the following described work not included in the plans and specifications for this contract. ***NOTE: This change order is not effective until approved by the Engineer.***

Description of work to be done, estimate of quantities and prices to be paid. (Segregate between additional work at contract price, agreed price and force account.) Unless otherwise stated, rates for rental of equipment cover only such time as equipment is actually used and no allowance will be made for idle time. This last percentage shown is the net accumulated increase or decrease from the original quantity in the Engineer's Estimate.

Delete Shorebird Roosting Habitat on Sheet C-7 as shown on sheet 23 of 643 of the contract plans.

Estimate of Decrease in Contract Item at Contract Price:

Item No. 145: CLASS 3 PERMEABLE MATERIAL
-138.5 M3 (–92.33%) $150.00 /M3 = –$20,100.00 (–92.33%)

Item No. 146: ROCK SLOPE PROTECTION (1T METHOD B)
-360 M3 (–27.91%) $275.00 /M3 = –$99,000.00 (–27.91%)

Item No. 147: GEOTEXTILE REINFORCEMENT FABRIC
-650 M2 (-100.00%) $2.20 /M2 = –$1,430.00 (–100.00%)

Total credit for Decrease in Contract Item.....($120,530.00)

Payment for quantities of Item #145, Class 3 Permeable Material, and Item #146, Rock Slope Protection, decreased in excess of 25% of the Engineer's Estimate will be adjusted in accordance with Section 4-1.03B(2), "Decreases of More Than 25 Percent", of the Standard Specifications. Determination of the adjustment is deferred until completion of work on this item.

In accordance with Section 4-1.03B(3), "Eliminated Items," of the Standard Specifications, the adjustment due to the elimination of Item #147, Geotextile Reinforcement Fabric, is zero.

Estimated Cost: Increase ☐ **Decrease** ☑ **($120,530.00)**

By reason of this order the time of completion will be adjusted as follows: 0 days

Submitted by		
Signature	**Resident Engineer** BEN GHAFGHAZI	**Date** 12/29/09
Approval Recommended by		
Signature	**Construction Engineer** Ben Ghafghazi	**Date** 12/29/09
Engineer Approval by		
Signature	**Construction Manager** Amer Bata	**Date** 1/29/10

We the undersigned contractor, have given careful consideration to the change proposed and agree, if this proposal is approved, that we will provide all equipment, furnish the materials, except as may otherwise be noted above, and perform all services necessary for the work above specified, and will accept as full payment therefor the prices shown above.

TE: If you, the contractor, do not sign acceptance of this order, your attention is directed to the requirements of the specifications as to eeding with the ordered work and filing a written protest within the time therein specified.

Contractor Acceptance by		
Signature	**(Print name and title)** EDMUNDO A. NUCHI, TREASURER	**Date** 1/26/10

STATE OF CALIFORNIA - DEPARTMENT OF TRANSPORTATION

CONTRACT CHANGE ORDER MEMORANDUM

AMER BATA / BEN GHAFGHAZI	FILE: **E.A.** 04 - 0120L4
FROM: BEN GHAFGHAZI	**CO-RTE-PM** ALA-80-1.6/2.7
	FED. NO. NO FED AID
CCO#: **92** SUPPLEMENT#: **0** Category Code: **CXPA**	CONTINGENCY BALANCE (incl. this change) **$3,412,475.40**
COST: **($120,530.00)** INCREASE ☐ DECREASE ☑	HEADQUARTERS APPROVAL REQUIRED? ☐ YES ☑ NO
SUPPLEMENTAL FUNDS PROVIDED: **$0.00**	IS THIS REQUEST IN ACCORDANCE WITH ENVIRONMENTAL DOCUMENTS? ☑ YES ☐ NO
CCO DESCRIPTION: Delete shorebird roosting habitat.	**PROJECT DESCRIPTION:** Construct bridge, roadway, building and electrical system.

Original Contract Time:	Time Adj. This Change:	Previously Approved CCO Time Adjustments:	Percentage Time Adjusted: (including this change)	Total # of Unreconciled Deferred Time CCO(s): (including this change)
810 Day(s)	**0** Day(s)	**184** Day(s)	**23** %	**14**

THIS CHANGE ORDER PROVIDES FOR:

Deleting Shorebird Roosting Habitat on Sheet C-7 as shown on sheet 23 of 643 of the contract plans.

This change is necessary because the configuration of the habitat is going to be revised to address concerns from Bay Conservation and Development Commission. The proposed revision needs to be reviewed and approved by various environmental agencies and BDCD prior to performing the work. Since the timeline required for this process is anticipated to extend beyond the contract completion date, the work will be eliminated from this project. This work will be added to Oakland Touchdown 2 project, EA 04-0120M4.

This work will be decreasing the following items:

Item No. 145: CLASS 3 PERMEABLE MATERIAL	-138.5 M3	<$20,100.00>	(-92.33%)
Item No. 146: ROCK SLOPE PROTECTION (1T METHOD B)	-360M3	<$99,000.00>	(-27.91%)
Item No. 147: GEOTEXTILE REINFORCEMENT FABRIC	-650M2	<$1,430.00>	(-100.0%)

Payment for quantities of Item #145, Class 3 Permeable Material, and Item #146, Rock Slope Protection, decreased in excess of 25% of the Engineer's Estimate will be adjusted in accordance with Section 4-1.03B(2), "Decreases of More Than 25 Percent", of the Standard Specifications. Determination of the adjustment is deferred until completion of work on this item.

In accordance with Section 4-1.03B(3), "Eliminated Items," of the Standard Specifications, the adjustment due to the elimination of Item #147, Geotextile Reinforcement Fabric, is zero.

Total credit for this change is $120,530.00, which can be returned to the contingency fund.

This change was requested by Stefan Garcia of Environmental. This change has been discussed and concurred by Jamie Gutierrez of Project Development. Maintenance concurrence is not required since this work will be performed on an upcoming contract.

No adjustment of contract time is warranted since this change does not affect the controlling operation.

ADA Notice: For individuals with sensory disabilities, this document is available in alternate formats. For information call: (916) 654-6410 or TDD (916) 654-3880 or write Records and Forms Management, 1120 N Street, MS-89, Sacramento, CA 95814.

CONCURRED BY:		
Construction Engineer:	Ben Ghafghazi	Date 12/29/09
Bridge Engineer:		Date
Project Engineer:	Jaime Gutierrez	Date 12/28/09
Project Manager:		Date
FHWA Rep.:		Date
Environmental:	Stefan Garcia	Date 12/28/09
Other (specify):		Date
Other (specify):		Date
District Prior Approval By:		Date
HQ (Issue Approve) By:		Date
dent Engineer's Signature:	12/29/09	Date

ESTIMATE OF COST

ITEMS	THIS REQUEST	TOTAL TO DATE
	($120,530.00)	($120,530.00)
FORCE ACCOUNT	$0.00	$0.00
AGREED PRICE	$0.00	$0.00
ADJUSTMENT	$0.00	$0.00
TOTAL	($120,530.00)	($120,530.00)

FEDERAL PARTICIPATION

☐ PARTICIPATING ☐ PARTICIPATING IN PART ☑ NONE
☐ NON-PARTICIPATING (MAINTENANCE) ☐ NON-PARTICIPATING

FEDERAL SEGREGATION (if more than one Funding Source or P.I.P. type)
☑ CCO FUNDED PER CONTRACT ☐ CCO FUNDED AS FOLLOWS

FEDERAL FUNDING SOURCE	PERCENT

ADA Notice: For individuals with sensory disabilities, this document is available in alternate formats. For information call: (916) 654-6410 or TDD (916) 654-3880 or write Records and Forms Management, 1120 N Street, MS-89, Sacramento, CA 95814.

STATE OF CALIFORNIA - DEPARTMENT OF TRANSPORTATION

CONTRACT CHANGE ORDER

Change Requested by: Engineer

CCO: 93	Suppl. No. 0	Contract No. 04 - 0120L4	Road ALA-80-1.6/2.7	FED. AID LOC.: NO FED AID

To: **M C M CONSTRUCTION INC**

You are directed to make the following changes from the plans and specifications or do the following described work not included in the plans and specifications for this contract. ***NOTE: This change order is not effective until approved by the Engineer.***

Description of work to be done, estimate of quantities and prices to be paid. (Segregate between additional work at contract price, agreed price and force account.) Unless otherwise stated, rates for rental of equipment cover only such time as equipment is actually used and no allowance will be made for idle time. This last percentage shown is the net accumulated increase or decrease from the original quantity in the Engineer's Estimate.

Adjustment of Compensation at Lump Sum:

Provide labor, equipment, and material necessary to revise architectural wall details of Mole Substation as shown on Sheet 2 of 2. This work shall be in accordance with Section 12, "Building Work (Mole Substation Architectural)," of the Special Provisions.

Provide traffic control for installation of roof trusses for the Mole Substation as directed by the Engineer.

For this work, the contractor will be paid the sum of $17,056.84. This sum constitutes full compensation, including markups, for this change.

Adjustment of Compensation at Agreed Lump Sum $17,056.84

Estimated Cost: Increase ☑ **Decrease** ☐ **$17,056.84**

By reason of this order the time of completion will be adjusted as follows: 0 days

Signature	~~Resident Engineer~~ BEN GHAFGHAZI	**Date** 4/26/2010
Signature	Construction Engineer Ben Ghafghazi	**Date** 4/26/2010
Signature	~~Construction Engineer~~ Ben Ghafghazi	**Date** 4/26/2010

We the undersigned contractor, have given careful consideration to the change proposed and agree, if this proposal is approved, that we will provide all equipment, furnish the materials, except as may otherwise be noted above, and perform all services necessary for the work above specified, and will accept as full payment therefor the prices shown above.

NOTE: If you, the contractor, do not sign acceptance of this order, your attention is directed to the requirements of the specifications as to proceeding with the ordered work and filing a written protest within the time therein specified.

Signature <UNILATERAL>	**(Print name and title)**	**Date**

04-ALA-80
1.6/2.7
04-0120LA

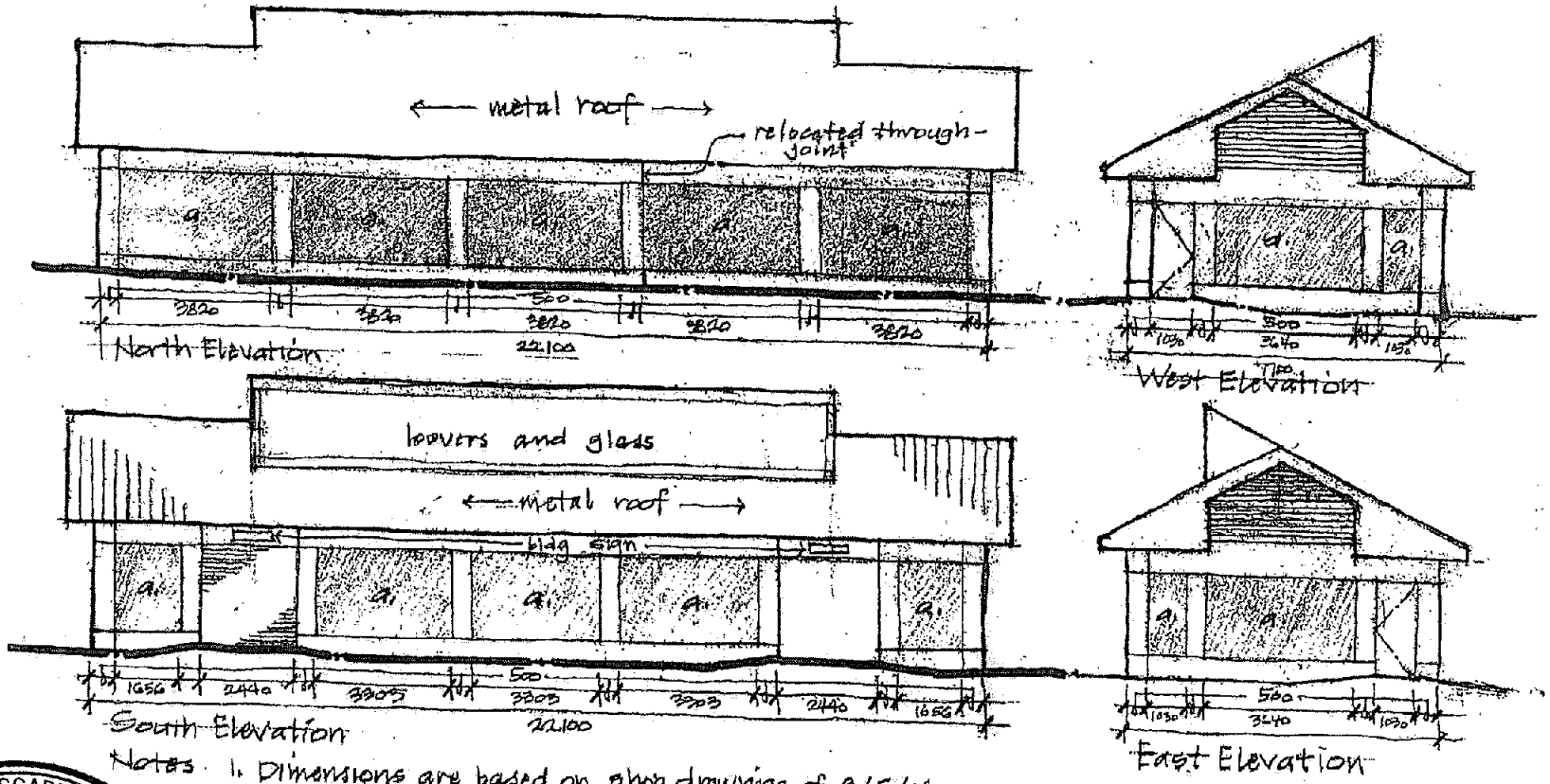

Notes
1. Dimensions are based on shop drawings of 9/5/08
2. a. denotes 45 recess flat surface - ~~color to match existing brown on site~~
3. ~~Pilasters - off white - match existing on site~~
4. RECESS DISTANCE (PILASTER TO WALL) 45

WALL TREATMENT
Oakland Mole Sub-Station
7 Jan 09 1:100

LICENSED LANDSCAPE ARCHITECT
Clive N. Endress
No. 1023
Signature
2008-11
Renewal Date
12/21/09
Date
STATE OF CALIFORNIA

EXHIBIT 'A'

STATE OF CALIFORNIA - DEPARTMENT OF TRANSPORTATION

CONTRACT CHANGE ORDER MEMORANDUM

TO: AMER BATA / BEN GHAFGHAZI

FROM: BEN GHAFGHAZI

FILE: **E.A.** 04 - 0120L4
CO-RTE-PM ALA-80-1.6/2.7
FED. NO. NO FED AID

CCO#: **93** SUPPLEMENT#: **0** Category Code: **CAPX**

CONTINGENCY BALANCE (incl. this change) **$3,547,297.40**

COST: **$17,056.84** INCREASE ☑ DECREASE ☐

HEADQUARTERS APPROVAL REQUIRED? ☐ YES ☑ NO

SUPPLEMENTAL FUNDS PROVIDED: **$0.00**

IS THIS REQUEST IN ACCORDANCE WITH ENVIRONMENTAL DOCUMENTS? ☑ YES ☐ NO

CCO DESCRIPTION:
Revise mole substation arch. details.

PROJECT DESCRIPTION:
Construct bridge, roadway, building and electrical system.

Original Contract Time:	Time Adj. This Change:	Previously Approved CCO Time Adjustments:	Percentage Time Adjusted: (including this change)	Total # of Unreconciled Deferred Time CCO(s): (including this change)
810 Day(s)	**0** Day(s)	**184** Day(s)	**23** %	**13**

THIS CHANGE ORDER PROVIDES FOR:

Revising architectural wall details of Mole Substation and providing traffic control for installation of roof trusses for the Mole Substation.

The wall details are being revised to provide a consistent architectural theme for all substation buildings within the SFOBB corridor. This change was requested by Caltrans' Landscape Architect. Additional traffic control is necessary for installation of roof trusses. The Contractor's plan for installing the roof trusses did not include provision for a lane closure on EB 80 since the work is all taking place off the traveled way and behind k-rail. To provide an additional safety measure to the traveling public the contractor was directed to provide a lane closure during this operation.

This work will be paid as Extra Work at Agreed Lump Sum of $17,056.84, which can be financed from the contingency fund. A detailed cost analysis is on file in the Resident Engineer's office.

This change has been discussed and concurred with Jaime Gutierrez of Project Development and Clive Endress of Landscape Architecture.

No adjustment of contract time is warranted since this change does not affect the controlling operation.

CONCURRED BY:

Construction Engineer:	Ben Ghafghazi	Date 1/6/2010
Bridge Engineer:		Date
Project Engineer:	Jaime Gutierrez	Date
Project Manager:		Date
FHWA Rep.:		Date
Environmental:		Date
Other (specify):	Clive Endress, Landscape Arch.	Date
Other (specify):		Date
District Prior Approval By:		Date
HQ (Issue Approve) By:		Date
Resident Engineer's Signature:		Date 1/6/2010

ESTIMATE OF COST

	THIS REQUEST	TOTAL TO DATE
ITEMS	$0.00	$0.00
FORCE ACCOUNT	$0.00	$0.00
AGREED PRICE	$0.00	$0.00
ADJUSTMENT	$17,056.84	$17,056.84
TOTAL	$17,056.84	$17,056.84

FEDERAL PARTICIPATION

☐ PARTICIPATING ☐ PARTICIPATING IN PART ☑ NONE
☐ NON-PARTICIPATING (MAINTENANCE) ☐ NON-PARTICIPATING

FEDERAL SEGREGATION (if more than one Funding Source or P.I.P. type)
☑ CCO FUNDED PER CONTRACT ☐ CCO FUNDED AS FOLLOWS

FEDERAL FUNDING SOURCE	PERCENT

ADA Notice: For individuals with sensory disabilities, this document is available in alternate formats. For information call: (916) 654-6410 or TDD (916) 654-3880 or write Records and Forms Management, 1120 N Street, MS-89, Sacramento, CA 95814.

CONTRACT CHANGE ORDER

Change Requested by: Engineer

CCO 94	Suppl. No. 0	Contract No. 04 - 0120L4	Road ALA-80-1.6/2.7	FED. AID LOC.: NO FED AID

To: **M C M CONSTRUCTION INC**

You are directed to make the following changes from the plans and specifications or do the following described work not included in the plans and specifications for this contract. ***NOTE: This change order is not effective until approved by the Engineer.***

Description of work to be done, estimate of quantities and prices to be paid. (Segregate between additional work at contract price, agreed price and force account.) Unless otherwise stated, rates for rental of equipment cover only such time as equipment is actually used and no allowance will be made for idle time. This last percentage shown is the net accumulated increase or decrease from the original quantity in the Engineer's Estimate.

Reschedule concrete pour at Frame 1, Bridge No. 34-0006L from January 13, 2009 to January 19, 2009. Adjust falsework grades as determined by the engineer. The Contractor shall be compensated for direct costs of cancellation and for adjusting falsework.

A determination of the delay in completion of the contract due to suspension of concrete pour at Frame 1 been made in accordance with Section 8-1.07, "Liquidated Damages," of the Standard Specifications. A time extension of 6 days will be granted as follows:

January 13, 14, 15, 16, 17, and 18, 2009

Extra Work at Force Account:

As determined by the Engineer, provide labor, equipment, and materials to adjust falsework at Hinge EW for Bridge No. 34-0006L to match elevation of existing Skyway structure. All work shall be in accordance with Section 10-1.53, "Concrete Structures," subsection "Falsework," and Section 51-1.06, "Falsework," of the Standard Specifications.

Estimated cost of Extra Work at Force Account $40,000.00

Adjustment of Compensation at Unit Price:

In accordance with Section 10-1.15, "Time Related Overhead," of the Special Provisions, the Contractor will be paid $24,691.36 per day of Time Related Overhead. This price constitutes full compensation, including all markups, for the work of this change.

Item #6: Time Related Overhead
6 WDAY (+0.74%) @ $24,691.36/WDAY= +$148,148.16 (+12.8%)

Adjustment of Compensation at Agreed Unit Price $148,148.16

The Contractor agrees to accept the sum of $10,000.00 per day for 6 days for all impact costs including, but not limited to, equipment, escalations and inefficiencies, incurred due to the Department delays recognized under this change order and not included in the compensation provided under Time Related Overhead. This price constitutes full compensation, including all markups, for all outstanding impact costs resulting from this change order.

6 days @ $10,000 per day = $60,000.00

Adjustment of Compensation at Agreed Unit Price $60,000.00

Total Adjustment of Compensation at Agreed Unit Price $208,148.16

Adjustment of Compensation at Lump Sum:

Compensate the Contractor for all direct costs related to cancelled concreter pour. This sum includes, but is not limited to, cost for material, equipment, and labor. For this work, the Contractor will be paid the sum of $114,294.58. This sum constitutes full compensation, including markups, for this change.

Adjustment of Compensation at Agreed Lump Sum $114,294.58

CONTRACT CHANGE ORDER

Change Requested by: Engineer

CCO 94	Suppl. No. 0	Contract No. 04 - 0120L4	Road ALA-80-1.6/2.7	FED. AID LOC.: NO FED AID

Estimated Cost: **Increase** ☑ **Decrease** ☐ **$362,442.74**

By reason of this order the time of completion will be adjusted as follows: 6 days

Submitted by

Signature	Resident Engineer	Date
William Howe	FOR BEN GHAFGHAZI	2·25·09

Approval Recommended by

Signature	Construction Manager	Date
	Amer Bata	3/3/09

Engineer Approval by

Signature	Construction Manager	Date
	Amer Bata	3/20/09

We the undersigned contractor, have given careful consideration to the change proposed and agree, if this proposal is approved, that we will provide all equipment, furnish the materials, except as may otherwise be noted above, and perform all services necessary for the work above specified, and will accept as full payment therefor the prices shown above.

NOTE: If you, the contractor, do not sign acceptance of this order, your attention is directed to the requirements of the specifications as to proceeding with the ordered work and filing a written protest within the time therein specified.

Contractor Acceptance by

Signature	(Print name and title)	Date
	EDMUNDO A. PUCHI, TREASURER	3/18/09

STATE OF CALIFORNIA - DEPARTMENT OF TRANSPORTATION

CONTRACT CHANGE ORDER MEMORANDUM

TO: AMER BATA / BEN GHAFGHAZI	FILE: **E.A.** 04 - 0120L4
FROM: BEN GHAFGHAZI	**CO-RTE-PM** ALA-80-1.6/2.7
	FED. NO. NO FED AID
CCO#: **94** SUPPLEMENT#: **0** Category Code: **CHPT**	CONTINGENCY BALANCE (incl. this change) **$9,004,741.20**
COST: **$362,442.74** INCREASE ☑ DECREASE ☐	HEADQUARTERS APPROVAL REQUIRED? ☑ YES ☐ NO
SUPPLEMENTAL FUNDS PROVIDED: **$0.00**	IS THIS REQUEST IN ACCORDANCE WITH ENVIRONMENTAL DOCUMENTS? ☑ YES ☐ NO
CCO DESCRIPTION: Cancelled concrete pour WB Frame 1.	**PROJECT DESCRIPTION:** Construct bridge, roadway, building and electrical system.

Original Contract Time:	Time Adj. This Change:	Previously Approved CCO Time Adjustments:	Percentage Time Adjusted: (including this change)	Total # of Unreconciled Deferred Time CCO(s): (including this change)
810 Day(s)	**6** Day(s)	**178** Day(s)	**23** %	**5**

THIS CHANGE ORDER PROVIDES FOR:

1) Granting contract time and compensating the Contractor for direct costs related to cancelled concrete pour at Frame 1, Bridge No. 34-0006L, scheduled for January 13, 2009. Reschedule pour to January 19, 2009. In accordance with Section 8-1.07, "Liquidated Damages," of the Standard Specifications, Sections 10-1.15, "Time Related Overhead," and Section 4, "Beginning of Work, Time of Completion and Liquidated Damages," of the Special Provisions a time extension of 6 days will be granted as follows:

January 13, 14, 15, 16, 17, and 18, 2009

2) Adjusting falsework at Hinge EW for Bridge No. 34-0006L to match elevation of existing Skyway structure. This work shall be in accordance with Section 10-1.53, "Concrete Structures," subsection "Falsework," and Section 51-1.06, "Falsework," of the Standard Specifications.

This change is necessary because the Contractor was ordered to suspend the concrete pour at Frame 1 due to incorrect deck contours between Hinge EW and Pier 17L. The Contractor had constructed the falsework based on information provided in August 2008. At a meeting held on January 12, 2009, it was determined by the Designer that the grades would not conform to the Skyway. Further measurements were taken and a new camber diagram was developed. The falsework will be adjusted accordingly to provide a proper conform. The pour was scheduled for January 13, 2009. The Contractor had already begun the concrete pour operation and had concrete delivered to the jobsite before the work was cancelled, therefore, the Contractor will be granted direct costs due to this cancellation including, concrete, concrete pumps, and show up time for labor on January 13, 2009. The pour was rescheduled to January 19, 2009. Since the concrete pour is on the critical path 6 working days will be granted.

This CCO will be paid as an Adjustment of Compensation at Agreed Unit Price of $24,691.36 per day for 6 days for a total of $148,148.16. This adjustment of compensation was calculated in accordance with Section 10-1.15, "Time Related Overhead," of the Special Provisions. Total increase in Item #6, "Time Related Overhead," as a result of this change is 12.8%. Compensation for extended project equipment and material costs will be paid as an adjustment of compensation at an agreed unit price of $10,000.00 per day for 6 days for a total of $60,000.00. Direct costs for concrete, concrete pumps, and labor will be paid as an Adjustment of Compensation at Agreed Lump Sum of $114,294.58. Adjusting falsework to conform with the Skyway structure will be paid as Extra Work at Force Account for $40,000.00. The total cost of this change order is $362,442.74, which can be financed from the contingency fund. This sum constitutes full compensation, including markups, for this change. A detailed cost analysis is on file in the Resident Engineer's office.

This change has been discussed and concurred with Patrick Treacy, HQ Coordinator; Mike Forner, SFOBB Construction Manager; Hasan El Natur, Structures Design; and Ken Terpstra, Project Manager. Maintenance concurrence is not necessary because this change addresses a field issue and does not change ultimate design of the bridge. An Issue and Approve was granted by Headquarters on March 11, 2009.

ADA Notice: For individuals with sensory disabilities, this document is available in alternate formats. For information call: (916) 654-6410 or TDD (916) 654-3880 or write Records and Forms Management, 1120 N Street, MS-89, Sacramento, CA 95814.

CONCURRED BY:			
Construction Engineer:	Ben Ghafghazi	Date	3/12/09
Bridge Engineer:	Mehran Ardakanian	Date	03/12/09
Project Engineer:	Hasan El-Natur, Structures Design	Date	1/15/09
Project Manager:	Ken Terprstra	Date	2/6/09
FHWA Rep.:		Date	
Environmental:		Date	
Other (specify):	Patrick Treacy, HQ Const. Coord.	Date	2/5/09
Other (specify):		Date	
District Prior Approval By:	Mike Forner, Principal TE	Date	2/5/09
HQ (Issue Approve) By:	Larry Salhaney	Date	3/11/09
Resident Engineer's Signature:		Date	3/12/09

ESTIMATE OF COST

	THIS REQUEST	TOTAL TO DATE
ITEMS	$0.00	$0.00
FORCE ACCOUNT	$40,000.00	$40,000.00
AGREED PRICE	$0.00	$0.00
ADJUSTMENT	$322,442.74	$322,442.74
TOTAL	$362,442.74	$362,442.74

FEDERAL PARTICIPATION

☐ PARTICIPATING ☐ PARTICIPATING IN PART ☑ NONE
☐ NON-PARTICIPATING (MAINTENANCE) ☐ NON-PARTICIPATING

FEDERAL SEGREGATION (if more than one Funding Source or P.I.P. type)
☑ CCO FUNDED PER CONTRACT ☐ CCO FUNDED AS FOLLOWS

FEDERAL FUNDING SOURCE	PERCENT

ADA Notice: For individuals with sensory disabilities, this document is available in alternate formats. For information call: (916) 654-6410 or TDD (916) 654-3880 or write Records and Forms Management, 1120 N Street, MS-89, Sacramento, CA 95814.

STATE OF CALIFORNIA - DEPARTMENT OF TRANSPORTATION

CONTRACT CHANGE ORDER MEMORANDUM

DATE: 9/1/2010 Page 1 of 1

TO: AMER BATA / BEN GHAFGHAZI	FILE: E.A. 04 - 0120L4
FROM: BEN GHAFGHAZI	CO-RTE-PM ALA-80-1.6/2.7
	FED. NO. NO FED AID
CCO#: 94 SUPPLEMENT#: 1 Category Code: CHPT	CONTINGENCY BALANCE (incl. this change): $889,799.90
COST: $20,000.00 INCREASE ☑ DECREASE ☐	HEADQUARTERS APPROVAL REQUIRED? ☑ YES ☐ NO
SUPPLEMENTAL FUNDS PROVIDED: $0.00	IS THIS REQUEST IN ACCORDANCE WITH ENVIRONMENTAL DOCUMENTS? ☑ YES ☐ NO
CCO DESCRIPTION: Provide Additional funds	**PROJECT DESCRIPTION:** Construct bridge, roadway, building and electrical system.

Original Contract Time:	Time Adj. This Change:	Previously Approved CCO Time Adjustments:	Percentage Time Adjusted: (including this change)	Total # of Unreconciled Deferred Time CCO(s): (including this change)
810 Day(s)	0 Day(s)	0 Day(s)	0 %	0

THIS CHANGE ORDER PROVIDES FOR:

additional funds for adjusting falsework at Hinge EW for Bridge No. 34-0006L to match elevation of existing Skyway structure. This work shall be in accordance with Section 10-1.53, "Concrete Structures," subsection "Falsework," and Section 51-1.06, "Falsework," of the Standard Specifications.

This change is necessary because the Contractor was ordered to suspend the concrete pour at Frame 1 due to incorrect deck contours between Hinge EW and Pier 17L. The Contractor had constructed the falsework based on information provided in August 2008. At a meeting held on January 12, 2009, it was determined by the Designer that the grades would not conform to the Skyway. Further measurements were taken and a new camber diagram was developed. The falsework will be adjusted accordingly to provide a proper conform. The pour was scheduled for January 13, 2009. The Contractor had already begun the concrete pour operation and had concrete delivered to the jobsite before the work was cancelled, therefore, the Contractor will be granted direct costs due to this cancellation including, concrete, concrete pumps, and show up time for labor on January 13, 2009. The pour was rescheduled to January 19, 2009. Since the concrete pour is on the critical path 6 working days will be granted.

CCO No. 94 was originally issued with $40,000.00 for the Extra Work @ Force Account portion of the work. However, based on the actual work performed to date, an additional $20,000.00 is required through the completion of the contract. This sum can be financed through the contract contingency funds.

This change has been discussed and concurred with Patrick Treacy, HQ Coordinator; Mike Forner, SFOBB Construction Manager; Hasan El Natur, Structures Design; and Ken Terpstra, Project Manager. Maintenance concurrence is not necessary because this change addresses a field issue and does not change ultimate design of the bridge. An Issue and Approve was granted by Headquarters on March 11, 2009.

CONCURRED BY:

Construction Engineer:	Ben Ghafghazi	Date 9/1/10
Bridge Engineer:		Date
Project Engineer:		Date
Project Manager:		Date
FHWA Rep.:		Date
Environmental:		Date
Other (specify):		Date
Other (specify):		Date
District Prior Approval By:		Date
HQ (Issue Approve) By:		Date
Resident Engineer's Signature:		Date 9/1/2010

ESTIMATE OF COST

	THIS REQUEST	TOTAL TO DATE
ITEMS	$0.00	$0.00
FORCE ACCOUNT	$20,000.00	$60,000.00
AGREED PRICE	$0.00	$0.00
ADJUSTMENT	$0.00	$322,442.74
TOTAL	$20,000.00	$382,442.74

FEDERAL PARTICIPATION

☐ PARTICIPATING ☐ PARTICIPATING IN PART ☑ NONE
☐ NON-PARTICIPATING (MAINTENANCE) ☐ NON-PARTICIPATING

FEDERAL SEGREGATION (if more than one Funding Source or P.I.P. type)
☑ CCO FUNDED PER CONTRACT ☐ CCO FUNDED AS FOLLOWS

FEDERAL FUNDING SOURCE	PERCENT

ADA Notice: For individuals with sensory disabilities, this document is available in alternate formats. For information call: (916) 654-6410 or TDD (916) 654-3880 or write Records and Forms Management, 1120 N Street, MS-89, Sacramento, CA 95814.

STATE OF CALIFORNIA - DEPARTMENT OF TRANSPORTATION

CONTRACT CHANGE ORDER

Change Requested by: Engineer

CCO: 94	Suppl. No. 1	Contract No. 04 - 0120L4	Road ALA-80-1.6/2.7	FED. AID LOC.: NO FED AID

To: **M C M CONSTRUCTION INC**

You are directed to make the following changes from the plans and specifications or do the following described work not included in the plans and specifications for this contract. ***NOTE: This change order is not effective until approved by the Engineer.***

Description of work to be done, estimate of quantities and prices to be paid. (Segregate between additional work at contract price, agreed price and force account.) Unless otherwise stated, rates for rental of equipment cover only such time as equipment is actually used and no allowance will be made for idle time. This last percentage shown is the net accumulated increase or decrease from the original quantity in the Engineer's Estimate.

Provide Additional Funds

Extra Work at Force Account:

Provide additional funds as determined by the Engineer, provide labor, equipment, and materials to adjust falsework at Hinge EW for Bridge No. 34-0006L to match elevation of existing Skyway structure. All work shall be in accordance with Section 10-1.53, "Concrete Structures," subsection "Falsework," and Section 51-1.06, "Falsework," of the Standard Specifications.

Estimated cost of Extra Work at Force Account $20,000.00

Estimated Cost: Increase ☑ Decrease ☐ **$20,000.00**

By reason of this order the time of completion will be adjusted as follows: 0 days

Submitted by

Signature	Resident Engineer BEN GHAFGHAZI	Date 9/1/2010

Approval Recommended by

Signature	Construction Manager Amer Bata	Date 9/3/10

Engineer Approval by

Signature	Construction Manager Amer Bata	Date 9/3/10

We the undersigned contractor, have given careful consideration to the change proposed and agree, if this proposal is approved, that we will provide all equipn furnish the materials, except as may otherwise be noted above, and perform all services necessary for the work above specified, and will accept as full paymer therefor the prices shown above.

NOTE: If you, the contractor, do not sign acceptance of this order, your attention is directed to the requirements of the specifications as to proceeding with the ordered work and filing a written protest within the time therein specified.

Contractor Acceptance by

Signature Not Required	(Print name and title)	Date

STATE OF CALIFORNIA - DEPARTMENT OF TRANSPORTATION

CONTRACT CHANGE ORDER

Change Requested by: Engineer

CCO 95	Suppl. No. 0	Contract No. 04 - 0120L4	Road ALA-80-1.6/2.7	FED. AID LOC.: NO FED AID

M C M CONSTRUCTION INC

You are directed to make the following changes from the plans and specifications or do the following described work not included in the plans and specifications for this contract. ***NOTE: This change order is not effective until approved by the Engineer.***

Description of work to be done, estimate of quantities and prices to be paid. (Segregate between additional work at contract price, agreed price and force account.) Unless otherwise stated, rates for rental of equipment cover only such time as equipment is actually used and no allowance will be made for idle time. This last percentage shown is the net accumulated increase or decrease from the original quantity in the Engineer's Estimate.

Extra Work at Force Account:

Provide labor, equipment, and materials as necessary for installation of 1 M high goose fence with access gates along WB 80 between Temescal Creek outfall on Powell St. onramp and HOV offramp near just east of Maritime St. offramp. Exact layout will be determined in the field. Fencing materials shall comply with the following:

1) Fence fabric shall be Cintoflex M, extruded, black, UV stabilized polypropylene mesh manufactured by Tenax Corporation. Fabric shall be 1.2 M in height.
2) Posts shall be Powerflex wood plastic composite (30% wood fiber, 70% polypropylene), black in color, manufactured by PowerFlex System Corporation. Posts shall be 1.5 M in length. Posts shall be placed in 760 mm galvanized steel post pockets.
3) Access gates shall be black vinyl coated.
4) All other related hardware shall be black in color.

Estimated cost of Extra Work at Force Account $20,000.00

Project limits will be extended to KP 5.1 in order to perform this work per sheet 2 of 2 of this CCO.

Estimated Cost: Increase ☑ **Decrease** ☐ **$20,000.00**

By reason of this order the time of completion will be adjusted as follows: 0 days

Submitted by		
Signature	Resident Engineer BEN GHAFGHAZI	Date 2/3/09
Approval Recommended by		
Signature	Construction Manager Amer Bata	Date 2/3/09
Engineer Approval by		
Signature	Principal TE Mike Forner	Date 2/26/09

We the undersigned contractor, have given careful consideration to the change proposed and agree, if this proposal is approved, that we will provide all equipment, furnish the materials, except as may otherwise be noted above, and perform all services necessary for the work above specified, and will accept as full payment therefor the prices shown above.

NOTE: If you, the contractor, do not sign acceptance of this order, your attention is directed to the requirements of the specifications as to proceeding with the ordered work and filing a written protest within the time therein specified.

Contractor Acceptance by		
Signature	(Print name and title) EDMUNDO A. IUCHI, TREASURER	Date 2/24/09

DIST	COUNTY	ROUTE	KILOMETER POST TOTAL PROJECT	SHEET NO	TOTAL SHEETS
04	Ala	80	1.6/2.7	1R1	643

INDEX OF SHEETS

Sheet No.	Description
1	Title and Location Map
2-4	Typical Cross Sections
5-8	Layouts
9-16	Profiles and Superelevation Diagrams
17-34	Construction Details
35-38	Erosion Control Plans, Details and Quantities
39-55	Drainage Plans, Profiles, Details and Quantities
56-74	Utility Plans and Details
75-82	Traffic Handling Plans
83	Construction Area Signs
84-90	Pavement Delineation Plans, Details and Quantities
91-93	Summary of Quantities
94-98	Sign Plans, Details and Quantities
99-113	Revised Standard Plans

STRUCTURE PLANS

114-321	Structure Plans
322-337	Log of Test Borings
338-350	Service Platforms, Utility Vault and Precast Wall Plans and Details
351-369	Mechanical Plans
370-600	Electrical Plans

BUILDING PLANS

601-614	Architectural Plans
615-629	Structural Plans
630-633	Mechanical Plans
634-643	Electrical Plans

THE STANDARD PLANS LIST APPLICABLE TO THIS CONTRACT IS INCLUDED IN THE NOTICE TO CONTRACTORS AND SPECIAL PROVISIONS BOOK.

STATE OF CALIFORNIA
DEPARTMENT OF TRANSPORTATION

PROJECT PLANS FOR CONSTRUCTION ON
STATE HIGHWAY

IN ALAMEDA COUNTY
IN OAKLAND
FROM 1.6 KM WEST OF THE TOLL PLAZA
TO 0.3 KM WEST OF THE TOLL PLAZA

To be supplemented by Standard Plans dated July, 2004

The State of California or its officers or agents shall not be responsible for the accuracy or completeness of electronic copies of this plan sheet.

To get to the Caltrans web site, go to: http://www.dot.ca.gov

Caltrans Metric

BEGIN CONSTRUCTION
STA W 83+11.00 KP 1.6
PM 1.0

END CONSTRUCTION
STA W 93+86 KP 2.7
PM 1.7

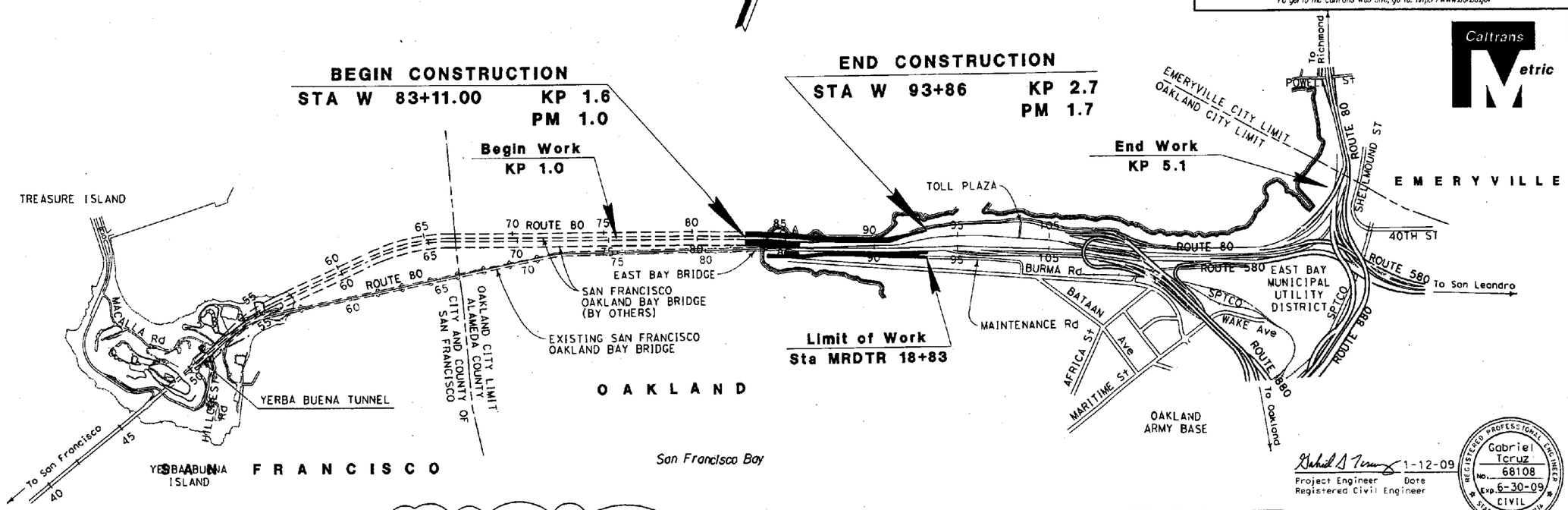

Approved as to impact on State facilities and conformance with applicable State standards and practices and that technical oversight was performed as described in the California Department of Transportation A & E Consultant Service Manual.

PROJECT ENGINEER	DATE	DESIGN OVERSIGHT APPROVAL PRINTED NAME	SIGNATURE	REGISTRATION NO.	DATE
J.E. GUTIERREZ	8/06	J.E. GUTIERREZ		52324	12-06

Gabriel Tcruz 1-12-09
Project Engineer Date
Registered Civil Engineer

REGISTERED PROFESSIONAL ENGINEER Gabriel Tcruz No. 68108 Exp. 6-30-09 CIVIL STATE OF CALIFORNIA

January 29, 2007
Plans Approval Date

△ ORIGINAL SHEET SUPERSEEDED

MARK	DATE	DESCRIPTIONS	REV	CK	CCO No.
△					
		REVISIONS			

NO SCALE

CONTRACT CHANGE ORDER NO. 95
SHEET 2 OF 2 1/23/09

The Contractor shall possess the Class (or Classes) of license as specified in the ''Notice to Contractors''.

LAST REVISION	DATE PLOTTED => 1/12/2009
08-16-06	TIME PLOTTED => 2:50:08 PM

Contract No. 04-0120L4

FORM DC-OE-93-PF (REV. 3/88)

FOR REDUCED PLANS ORIGINAL SCALE IS IN MILLIMETERS 0 20 40 60 80

USERNAME => $(USER)
DGN FILE => ...\gtcruz\Desktop\4012101ap001.dgn

CU 04251 | EA 0120L1

STATE OF CALIFORNIA - DEPARTMENT OF TRANSPORTATION

CONTRACT CHANGE ORDER MEMORANDUM

DATE: 1/21/2009

TO: AMER BATA / BEN GHAFGHAZI	FILE: E.A. 04 - 0120L4
FROM: BEN GHAFGHAZI	CO-RTE-PM ALA-80-1.6/2.7
	FED. NO. NO FED AID
CCO#: 95 SUPPLEMENT#: 0 Category Code: CGAB	CONTINGENCY BALANCE (incl. this change) $9,305,173.20
COST: $20,000.00 INCREASE ☑ DECREASE ☐	HEADQUARTERS APPROVAL REQUIRED? ☑ YES ☐ NO
SUPPLEMENTAL FUNDS PROVIDED: $0.00	IS THIS REQUEST IN ACCORDANCE WITH ENVIRONMENTAL DOCUMENTS? ☑ YES ☐ NO
CCO DESCRIPTION: Goose Fence WB 80.	**PROJECT DESCRIPTION:** Construct bridge, roadway, building and electrical system.

Original Contract Time:	Time Adj. This Change:	Previously Approved CCO Time Adjustments:	Percentage Time Adjusted: (including this change)	Total # of Unreconciled Deferred Time CCO(s): (including this change)
810 Day(s)	0 Day(s)	178 Day(s)	22 %	5

THIS CHANGE ORDER PROVIDES FOR:

Installing 1 M high goose fence with access gates along WB 80 between Temescal Creek outfall on Powell St. onramp and 150 M west of HOV offramp near Maritime. Exact layout will be determined in the field. Project limit will be extended to KP 5.1 in order to perform this work.

This change is necessary to provide a barrier to prevent geese from encroaching onto the freeway. The work is being performed under this contract to fulfill a permit agreement with BCDC that pertains to all SFOBB corridor projects and was not included in the original contract. This work has been discussed with Jon Tapping, Headquarters Construction Reviewer, to determine whether the work is within the scope of this contract. Jon Tapping has made the determination that the work is within project scope since the BCDC permit for this contract falls under the purview of the umbrella permit for the entire SFOBB corridor footprint. The proposed work is consistent with the whole work contemplated on Contract 04-0120L4 and thus within contract scope. This work is not significantly different than other contract work, it can be performed with personnel and equipment already on the job, and contract cost and time is not significantly impacted. This is the nearest SFOBB contract to the location of the work.

This work will be paid as Extra Work at Force Account for $20,000.00, which can be financed from the contingency fund.

This change was requested by Gabriel Tcruz of Project Development (memo attached). This change has been discussed and concurred with Patrick Treacy, HQ Coordinator; Mike Forner, SFOBB Construction Manager; Ken Terpstra, Project Manager; Stefan Galvez of Environmental; and Phil Harsono of Maintenance. An Issue and Approve was granted by Headquarters on February 5, 2009.

No adjustment of contract time is warranted since this change does not affect the controlling operation.

CONCURRED BY:

Construction Engineer:	Ben Ghafghazi	Date	2/5/09
Bridge Engineer:		Date	
Project Engineer:	Gabriel Tcruz	Date	1/12/09
Project Manager:	Ken Terprstra	Date	2/3/09
FHWA Rep.:		Date	
Environmental:	Stefan Galvez	Date	1/12/09
Other (specify):	Phil Harsono, Maintenance	Date	1/23/09
Other (specify):	Jon Tapping, HQ Const.	Date	1/29/09
District Prior Approval By:	Mike Forner, Principal TE	Date	1/26/09
HQ (Issue Approve) By:	Bob Molera	Date	2/5/09
Resident Engineers Signature:		Date	2/5/09

ESTIMATE OF COST

	THIS REQUEST	TOTAL TO DATE
ITEMS	$0.00	$0.00
FORCE ACCOUNT	$20,000.00	$20,000.00
AGREED PRICE	$0.00	$0.00
ADJUSTMENT	$0.00	$0.00
TOTAL	$20,000.00	$20,000.00

FEDERAL PARTICIPATION

☐ PARTICIPATING ☐ PARTICIPATING IN PART ☑ NONE
☐ NON-PARTICIPATING (MAINTENANCE) ☐ NON-PARTICIPATING

FEDERAL SEGREGATION (if more than one Funding Source or P.I.P. type)
☑ CCO FUNDED PER CONTRACT ☐ CCO FUNDED AS FOLLOWS

FEDERAL FUNDING SOURCE	PERCENT

ADA Notice: For individuals with sensory disabilities, this document is available in alternate formats. For information call: (916) 654-6410 or TDD (916) 654-3880 or write Records and Forms Management, 1120 N Street, MS-89, Sacramento, CA 95814.

STATE OF CALIFORNIA - DEPARTMENT OF TRANSPORTATION

CONTRACT CHANGE ORDER MEMORANDUM

DATE: 3/10/2009 Page 1 of 1

TO: AMER BATA / BEN GHAFGHAZI	FILE: E.A. 04 - 0120L4
FROM: BEN GHAFGHAZI	CO-RTE-PM ALA-80-1.6/2.7
	FED. NO. NO FED AID
CCO#: 95 SUPPLEMENT#: 1 Category Code: CGAB	CONTINGENCY BALANCE (incl. this change) $8,579,749.20
COST: $20,000.00 INCREASE ☑ DECREASE ☐	HEADQUARTERS APPROVAL REQUIRED? ☐ YES ☑ NO
SUPPLEMENTAL FUNDS PROVIDED: $0.00	IS THIS REQUEST IN ACCORDANCE WITH ENVIRONMENTAL DOCUMENTS? ☑ YES ☐ NO
CCO DESCRIPTION: Goose Fence WB 80.	**PROJECT DESCRIPTION:** Construct bridge, roadway, building and electrical system.

Original Contract Time:	Time Adj. This Change:	Previously Approved CCO Time Adjustments:	Percentage Time Adjusted: (including this change)	Total # of Unreconciled Deferred Time CCO(s): (including this change)
810 Day(s)	0 Day(s)	184 Day(s)	23 %	8

THIS CHANGE ORDER PROVIDES FOR:

Additional funds for installing 1 M high goose fence with access gates along WB 80 between Temescal Creek outfall on Powell St. onramp and 150 M west of HOV offramp near Maritime per CCO No. 95. Exact layout will be determined in the field.

This change is necessary to provide a barrier to prevent geese from encroaching onto the freeway. The work is being performed under this contract to fulfill a permit agreement with BCDC that pertains to all SFOBB corridor projects and was not included in the original contract. This supplement provides additional funds for the work, as the cost of the work was higher than originally anticipated.

This work will be paid as Extra Work at Force Account for $20,000.00, which can be financed from the contingency fund.

This change has been discussed and concurred with Patrick Treacy, HQ Coordinator; Mike Forner, SFOBB Construction Manager; and Ken Terpstra, Project Manager. Design, Environmental, and Maintenance concurrence is not necessary since this supplement is for additional funds only. This CCO will be processed in the District as determined by Bob Molera of Headquarters Construction on March 23, 2009.

No adjustment of contract time is warranted since this change does not affect the controlling operation.

CONCURRED BY:

Construction Engineer:	Ben Ghafghazi	Date 3/23/09
Bridge Engineer:		Date
Project Engineer:		Date
Project Manager:	Ken Terprstra	Date 3/19/09
FHWA Rep.:		Date
Environmental:		Date
Other (specify):	Patrick Treacy, HQ Const. Coord.	Date 3/12/09
Other (specify):		Date
District Prior Approval By:	Mike Forner, Principal TE	Date 3/11/09
HQ (Issue Approve) By:		Date
Resident Engineer's Signature:		Date 3/23/09

ESTIMATE OF COST

	THIS REQUEST	TOTAL TO DATE
ITEMS	$0.00	$0.00
FORCE ACCOUNT	$20,000.00	$40,000.00
AGREED PRICE	$0.00	$0.00
ADJUSTMENT	$0.00	$0.00
TOTAL	$20,000.00	$40,000.00

FEDERAL PARTICIPATION

☐ PARTICIPATING ☐ PARTICIPATING IN PART ☑ NONE
☐ NON-PARTICIPATING (MAINTENANCE) ☐ NON-PARTICIPATING

FEDERAL SEGREGATION (if more than one Funding Source or P.I.P. type)
☑ CCO FUNDED PER CONTRACT ☐ CCO FUNDED AS FOLLOWS

FEDERAL FUNDING SOURCE	PERCENT

ADA Notice: For individuals with sensory disabilities, this document is available in alternate formats. For information call: (916) 654-6410 or TDD (916) 654-3880 or write Records and Forms Management, 1120 N Street, MS-89, Sacramento, CA 95814.

STATE OF CALIFORNIA - DEPARTMENT OF TRANSPORTATION

CONTRACT CHANGE ORDER

Change Requested by:

CCO 95	Suppl. No. 1	Contract No. 04 - 0120L4	Road ALA-80-1.6/2.7	FED. AID LOC.: NO FED AID

M C M CONSTRUCTION INC

You are directed to make the following changes from the plans and specifications or do the following described work not included in the plans and specifications for this contract. ***NOTE: This change order is not effective until approved by the Engineer.***

Description of work to be done, estimate of quantities and prices to be paid. (Segregate between additional work at contract price, agreed price and force account.) Unless otherwise stated, rates for rental of equipment cover only such time as equipment is actually used and no allowance will be made for idle time. This last percentage shown is the net accumulated increase or decrease from the original quantity in the Engineer's Estimate.

Provide additional funds for CCO No. 95. Work is as described below.

Extra Work at Force Account:

Provide labor, equipment, and materials as necessary for installation of 1 M high goose fence with access gates along WB 80 between Temescal Creek outfall on Powell St. onramp and HOV offramp near just east of Maritime St. offramp. Exact layout will be determined in the field. Work is as specified in CCO No. 95 Supplement 0.

Estimated cost of Extra Work at Force Account $20,000.00

Estimated Cost: Increase ☑ **Decrease** ☐ **$20,000.00**

By reason of this order the time of completion will be adjusted as follows: 0 days

Submitted by		
Signature	Resident Engineer BEN GHAFGHAZI	Date 5/11/09
Approval Recommended by		
Signature	Construction Manager Amer Bata	Date 3/14/09
Engineer Approval by		
Signature Michael Fraum	Principal TE Mike Forner	Date 3/23/09

We the undersigned contractor, have given careful consideration to the change proposed and agree, if this proposal is approved, that we will provide all equipment, furnish the materials, except as may otherwise be noted above, and perform all services necessary for the work above specified, and will accept as full payment therefor the prices shown above.

NOTE: If you, the contractor, do not sign acceptance of this order, your attention is directed to the requirements of the specifications as to proceeding with the ordered work and filing a written protest within the time therein specified.

Contractor Acceptance by		
Signature N/A R.A.	(Print name and title)	Date

CONTRACT CHANGE ORDER

Change Requested by: Engineer

CCO 96	Suppl. No. 0	Contract No. 04 - 0120L4	Road ALA-80-1.6/2.7	FED. AID LOC.: NO FED AID

To: **M C M CONSTRUCTION INC**

You are directed to make the following changes from the plans and specifications or do the following described work not included in the plans and specifications for this contract. ***NOTE: This change order is not effective until approved by the Engineer.***

Description of work to be done, estimate of quantities and prices to be paid. (Segregate between additional work at contract price, agreed price and force account.) Unless otherwise stated, rates for rental of equipment cover only such time as equipment is actually used and no allowance will be made for idle time. This last percentage shown is the net accumulated increase or decrease from the original quantity in the Engineer's Estimate.

Provide bolts and drill holes in pipe beam for installing Hinge E pipe beam restraint brackets.

Extra Work at Force Account:

Furnish 512, 30 mm diameter, 102 mm long, ASTM A490 (150 ksi) bolt assemblies and 320, 15 mm diameter, 65 mm long, ASTM A449 Type I (120 ksi) bolt assemblies for the Hinge E pipe beam restraint brackets. Requirements for high strength bolt assemblies shall be in accordance with Section 10-1.69, "Steel Structures," of the Special Provisions as revised in CCO#57, including all required tests. An additional quantity of bolt assemblies will be sampled at the jobsite as determined necessary by the Engineer.

Drill bolt holes in Hinge E pipe beam as shown in Section B-B of Hinge E Bearing Details No. 4, sheet 257 of 643 of the contract plans. Holes shall be drilled in accordance with Section 55-3.14A, "Bolt Holes," of the Standard Specifications. The Contractor shall submit a drilling procedure to the Engineer for review and approval prior to performing the work.

Estimated cost of Extra Work at Force Account $145,000.00

Consideration of a time adjustment will be deferred until completion of the work specified herein. Determination of a commensurate time extension will be made in accordance with Section 10-1.14, "Progress Schedule (Critical Path Method)," of the Special Provisions and Section 8-1.07, "Liquidated Damages," of the Standard Specifications.

Estimated Cost: **Increase** ☑ **Decrease** ☐ **$145,000.00**

By reason of this order the time of completion will be adjusted as follows: Deferred

Submitted by		
Signature	~~Resident Engineer~~ BEN GHAFGHAZI	Date 4/3/09
Approval Recommended by		
Signature	Construction Engineer Ben Ghafghazi	Date 4/3/09
Engineer Approval by		
Signature	Construction Manager Amer Bata	Date 4/27/09

We the undersigned contractor, have given careful consideration to the change proposed and agree, if this proposal is approved, that we will provide all equipment, furnish the materials, except as may otherwise be noted above, and perform all services necessary for the work above specified, and will accept as full payment therefor the prices shown above.

NOTE: If you, the contractor, do not sign acceptance of this order, your attention is directed to the requirements of the specifications as to proceeding with the ordered work and filing a written protest within the time therein specified.

Contractor Acceptance by		
Signature	(Print name and title) EDMUNDO A. IUCHI, TREASURER	Date 4/15/09

STATE OF CALIFORNIA - DEPARTMENT OF TRANSPORTATION

CONTRACT CHANGE ORDER MEMORANDUM

DATE: 4/1/2009 Page 1 of 1

TO: AMER BATA / BEN GHAFGHAZI	FILE: E.A. 04 - 0120L4
FROM: BEN GHAFGHAZI	CO-RTE-PM ALA-80-1.6/2.7
	FED. NO. NO FED AID
CCO#: 96 SUPPLEMENT#: 0 Category Code: CHSA	CONTINGENCY BALANCE (incl. this change) $8,274,498.00
COST: $145,000.00 INCREASE ☑ DECREASE ☐	HEADQUARTERS APPROVAL REQUIRED? ☐ YES ☑ NO
SUPPLEMENTAL FUNDS PROVIDED: $0.00	IS THIS REQUEST IN ACCORDANCE WITH ENVIRONMENTAL DOCUMENTS? ☑ YES ☐ NO
CCO DESCRIPTION: Bolts and holes for Hinge E brackets.	**PROJECT DESCRIPTION:** Construct bridge, roadway, building and electrical system.

Original Contract Time:	Time Adj. This Change:	Previously Approved CCO Time Adjustments:	Percentage Time Adjusted: (including this change)	Total # of Unreconciled Deferred Time CCO(s): (including this change)
810 Day(s)	DEF Day(s)	184 Day(s)	23 %	11

THIS CHANGE ORDER PROVIDES FOR:

Furnishing 512, 30 mm diameter, 102 mm long, ASTM A490 (150 ksi) bolt assemblies and 320, 15 mm diameter, 65 mm long, ASTM A449 Type I (120 ksi) bolt assemblies for attaching the Hinge E pipe beam restraint brackets to the pipe beam and drilling holes for bolts in Hinge E pipe beam. Requirements for high strength bolt assemblies shall be in accordance with Section 10-1.69, "Steel Structures," of the Special Provisions as revised in CCO#57. Additional bolt assemblies will be sampled at the jobsite as determined necessary by the Engineer. Bolt holes shall be drilled in accordance with Section 55-3.14A, "Bolt Holes," of the Standard Specifications.

This change is necessary because bolts are required for installation of the brackets, but are not included in any item of work. The restraint brackets are State furnished per Section 8-1.03, "State-Furnished Materials," of the Special Provisions, but bolts were not included. Furthermore the pipe beams do not have holes pre-drilled for the bolts. The Special Provisions and contract plans do not specify bolts or drilling holes as being included with contract item work for pipe beam installation.

This work will be paid as Extra Work at Force Account for $145,000.00, which can be financed from the contingency fund.

This change has been discussed and concurred with Hasan El-Natur of Structures Design and Jal Birdy of Moffat Nichol. Maintenance concurrence is not necessary since this CCO does not make any changes to the design of the bridge.

Adjustment of contract time is deferred pending completion of the work specified in this change as it may affect the controlling operation. Determination of a commensurate time extension will be made in accordance with Section 10-1.14, "Progress Schedule (Critical Path Method)," of the Special Provisions and Section 8-1.07, "Liquidated Damages," of the Standard Specifications.

CONCURRED BY:			
Construction Engineer:	Ben Ghafghazi	Date	4/3/09
Bridge Engineer:	Mehran Ardakanian	Date	4/3/09
Project Engineer:	Hasan El-Natur, Structures Design	Date	1/28/09
Project Manager:		Date	
FHWA Rep.:		Date	
Environmental:		Date	
Other (specify):	Anthony Mullen, METS	Date	3/30/09
Other (specify):	Jal Birdy, Moffat Nichol	Date	1/20/09
District Prior Approval By:		Date	
HQ (Issue Approve) By:		Date	
Resident Engineer's Signature:		Date	4/3/09

ESTIMATE OF COST

	THIS REQUEST	TOTAL TO DATE
ITEMS	$0.00	$0.00
FORCE ACCOUNT	$145,000.00	$145,000.00
AGREED PRICE	$0.00	$0.00
ADJUSTMENT	$0.00	$0.00
TOTAL	$145,000.00	$145,000.00

FEDERAL PARTICIPATION

☐ PARTICIPATING ☐ PARTICIPATING IN PART ☑ NONE
☐ NON-PARTICIPATING (MAINTENANCE) ☐ NON-PARTICIPATING

FEDERAL SEGREGATION (if more than one Funding Source or P.I.P. type)
☑ CCO FUNDED PER CONTRACT ☐ CCO FUNDED AS FOLLOWS

FEDERAL FUNDING SOURCE	PERCENT

ADA Notice: For individuals with sensory disabilities, this document is available in alternate formats. For information call: (916) 654-6410 or TDD (916) 654-3880 or write Records and Forms Management, 1120 N Street, MS-89, Sacramento, CA 95814.

STATE OF CALIFORNIA - DEPARTMENT OF TRANSPORTATION

CONTRACT CHANGE ORDER MEMORANDUM

DATE: 4/6/2010

TO: AMER BATA / BEN GHAFGHAZI	FILE: **E.A.** 04 - 0120L4
FROM: BEN GHAFGHAZI	**CO-RTE-PM** ALA-80-1.6/2.7
	FED. NO. NO FED AID
CCO#: **96** SUPPLEMENT#: **1** Category Code: **AFZZ**	CONTINGENCY BALANCE (incl. this change) **$2,146,116.40**
COST: **$0.00** INCREASE ☐ DECREASE ☐	HEADQUARTERS APPROVAL REQUIRED? ☐ YES ☑ NO
SUPPLEMENTAL FUNDS PROVIDED: **$0.00**	IS THIS REQUEST IN ACCORDANCE WITH ENVIRONMENTAL DOCUMENTS? ☑ YES ☐ NO
CCO DESCRIPTION: Time Adjustment of 0 Days	**PROJECT DESCRIPTION:** Construct bridge, roadway, building and electrical system.

Original Contract Time:	Time Adj. This Change:	Previously Approved CCO Time Adjustments:	Percentage Time Adjusted: (including this change)	Total # of Unreconciled Deferred Time CCO(s): (including this change)
810 Day(s)	**0** Day(s)	**184** Day(s)	**23** %	**11**

THIS CHANGE ORDER PROVIDES FOR:

A time adjustment of 0 (zero) working days, in accordance with Section 8-1.07, "Liquidated Damages", of the Standard Specifications.

It has been determined that the work of Contract Change Order No. 96 has had no impact on the contractor's controlling operation. Therefore, a time extension of 0 days is recommended.

Total Time Adjustment = 0 Days

CONCURRED BY:	
Construction Engineer: Ben Ghafghazi	Date 4/7/2010
Bridge Engineer:	Date
Project Engineer:	Date
Project Manager:	Date
FHWA Rep.:	Date
Environmental:	Date
Other (specify):	Date
Other (specify):	Date
District Prior Approval By:	Date
HQ (Issue Approve) By:	Date
Resident Engineer's Signature:	Date 4/7/2010

ESTIMATE OF COST

	THIS REQUEST	TOTAL TO DATE
ITEMS	$0.00	$0.00
FORCE ACCOUNT	$0.00	$145,000.00
AGREED PRICE	$0.00	$0.00
ADJUSTMENT	$0.00	$0.00
TOTAL	$0.00	$145,000.00

FEDERAL PARTICIPATION

☐ PARTICIPATING ☐ PARTICIPATING IN PART ☑ NONE
☐ NON-PARTICIPATING (MAINTENANCE) ☐ NON-PARTICIPATING

FEDERAL SEGREGATION (if more than one Funding Source or P.I.P. type)
☑ CCO FUNDED PER CONTRACT ☐ CCO FUNDED AS FOLLOWS

FEDERAL FUNDING SOURCE	PERCENT

ADA Notice: For individuals with sensory disabilities, this document is available in alternate formats. For information call: (916) 654-6410 or TDD (916) 654-3880 or write Records and Forms Management, 1120 N Street, MS-89, Sacramento, CA 95814.

STATE OF CALIFORNIA - DEPARTMENT OF TRANSPORTATION

CONTRACT CHANGE ORDER

Change Requested by: Engineer

CCO: 96	Suppl. No. 1	Contract No. 04 - 0120L4	Road ALA-80-1.6/2.7	FED. AID LOC.: NO FED AID

To: **M C M CONSTRUCTION INC**

You are directed to make the following changes from the plans and specifications or do the following described work not included in the plans and specifications for this contract. ***NOTE: This change order is not effective until approved by the Engineer.***

Description of work to be done, estimate of quantities and prices to be paid. (Segregate between additional work at contract price, agreed price and force account.) Unless otherwise stated, rates for rental of equipment cover only such time as equipment is actually used and no allowance will be made for idle time. This last percentage shown is the net accumulated increase or decrease from the original quantity in the Engineer's Estimate.

TIME ADJUSTMENT:

A determination of the delay in completion of the contract due to the work specified by Contract Change Order No. 96 has been made in accordance with the provisions of Section 8-1.07 of the Standard Specifications.

Time Adjustment = 0 Days

Acceptance of this change order constitutes an agreement of full resolution of all time impact costs resulting from Change Order No. 96.

This change order acts to resolve the deferred time issued on Change Order No. 96, and no additional time shall be granted.

Estimated Cost: **Increase** ☐ **Decrease** ☐ **$0.00**

By reason of this order the time of completion will be adjusted as follows: 0 days

Signature	**Resident Engineer** Ben Ghafghazi	**Date** 4/7/2010
Signature	**Construction Engineer** Ben Ghafghazi	**Date** 4/7/2010
Signature	**Construction Manager** Amer Bata	**Date** 7/14/10

We the undersigned contractor, have given careful consideration to the change proposed and agree, if this proposal is approved, that we will provide all equipment, furnish the materials, except as may otherwise be noted above, and perform all services necessary for the work above specified, and will accept as full payment therefor the prices shown above.

NOTE: If you, the contractor, do not sign acceptance of this order, your attention is directed to the requirements of the specifications as to proceeding with the ordered work and filing a written protest within the time therein specified.

Signature	**(Print name and title)** JAMES A. CARTER, PRESIDENT	**Date** 7/14/10

CONTRACT CHANGE ORDER

Change Requested by: Engineer

CCO 97	Suppl. No. 0	Contract No. 04 - 0120L4	Road ALA-80-1.6/2.7	FED. AID LOC.: NO FED AID

M C M CONSTRUCTION INC

You are directed to make the following changes from the plans and specifications or do the following described work not included in the plans and specifications for this contract. ***NOTE: This change order is not effective until approved by the Engineer.***

Description of work to be done, estimate of quantities and prices to be paid. (Segregate between additional work at contract price, agreed price and force account.) Unless otherwise stated, rates for rental of equipment cover only such time as equipment is actually used and no allowance will be made for idle time. This last percentage shown is the net accumulated increase or decrease from the original quantity in the Engineer's Estimate.

Extra Work at Force Account:

Provide labor, equipment, and materials as necessary to revise the longitudinal pre-stressing profile and P-jack at Frame 1 of Bridge No. 34-0006R superstructure as shown on sheet 2 of 2 of this CCO. Work shall be in accordance with Sections 10-1.52, "Prestressing Concrete," and 10-1.67, "Reinforcement," of the Special Provisions.

Estimated cost of Extra Work at Force Account $20,000.00

Estimated Cost: **Increase** ☑ **Decrease** ☐ **$20,000.00**

By reason of this order the time of completion will be adjusted as follows: 0 days

Submitted by		
Signature	Resident Engineer BEN GHAFGHAZI	Date 1/29/09
Approval Recommended by		
Signature	Construction Engineer Ben Ghafghazi	Date 1/29/09
Engineer Approval by		
Signature 7-21-09	Construction Engineer Ben Ghafghazi / Mohan Ardekani for Amer Batta	Date 7/15/09

We the undersigned contractor, have given careful consideration to the change proposed and agree, if this proposal is approved, that we will provide all equipment, furnish the materials, except as may otherwise be noted above, and perform all services necessary for the work above specified, and will accept as full payment therefor the prices shown above.

NOTE: If you, the contractor, do not sign acceptance of this order, your attention is directed to the requirements of the specifications as to proceeding with the ordered work and filing a written protest within the time therein specified.

Contractor Accepted by		
Signature	(Print name and title) EDMUNDO A. PUCHI, TREASURER	Date 7/9/09

PRESTRESSING NOTES

1860 MPa Low Relaxation Strand
Pjack = See "Pjack Table"
K = 0.0007/m, μ = 0.20/rad (Girders)

Anchor Set = 10 mm
Total number of girders = 7

Concrete f'c @ 28 days = 45 MPa
Concrete f'ci @ time of stressing = 43 MPa*

Contractor shall submit elongation calculations based on initial stress at ⊠ = See "Pjack TABLE"

Distribution of final prestress force (Pjack) shall be based on the table shown. Maximum final girder and deck slab force variation from the designated force shall not exceed 3200 kN.

One end stressing shall be performed from Hinge FE for girders, and right end for deck slab.

* f'ci can be reduced to 38 MPa if rebar spiral in local anchor area provided is longer than the minimum length recommended by manufacturer. The Contractor shall submit calculations to the Engineer for approval before construction.

STAMP IS VALID FOR REVISION 1 ONLY

MOHAN S. CHAR
REGISTERED PROFESSIONAL ENGINEER
No. C057894
Exp. 6/30/10
CIVIL
STATE OF CALIFORNIA

Pjack TABLE		
Girder Designation	Pjack/ Girder	Initial Force Coefficient @ ⊠
(A) & (L)	9450 kN	0.880
(B) & (K)	43 400 kN	0.776
(C)(F) & (J)	36 170 kN	0.675

1

MARK	DATE	DESCRIPTION	BY	CH'D
1	1/21/09	REVISE Pjack & PRESTRESSING PATH CG VALUES	MSC	TWD

REVISION(S)

CONTRACT CHANGE ORDER NO. 97
SHEET 2 OF 2 1/28/09

Notes:
1. Structure depth varies linearly from Hinge EE to Hinge FE.
2. For Deck slab prestressing details, see "Eastbound Deck Details No. 3" sheet.
3. For Intermediate Diaphragm, see "Eastbound Deck Details No. 4" sheet.
4. For "Camber Diagram", see "Eastbound Camber Diagrams" sheet.
5. For additional Hair Pin reinforcement around ducts, see "Detail 2" on "Eastbound Hinge EE Details No. 5" sheet.

LEGEND
(A) Indicates girder designation
0.5 L2 Indicates fraction of each girder length in the span noted

Caltrans Metric

DIST.	COUNTY	ROUTE	KILOMETER POST TOTAL PROJECT	SHEET NO.	TOTAL SHEETS
04	Ala	80	1.6/2.7	212R1	643

REGISTERED ENGINEER - CIVIL
1-29-07
PLANS APPROVAL DATE
REGISTERED PROFESSIONAL ENGINEER MOHAN S. CHAR No. C057894 Exp. 6/30/08 CIVIL STATE OF CALIFORNIA

The State of California or its officers or agents shall not be responsible for the accuracy or completeness of electronic copies of this plan sheet.

T.Y. LIN / MOFFATT & NICHOL
TWO HARRISON STREET, SUITE 500
SAN FRANCISCO, CA 94105

LIM & NASCIMENTO ENGINEERING CORPORATION
12 MAUCHLY, BLDG L
IRVINE, CA 92618

To get to the Caltrans web site, go to: http://www.dot.ca.gov

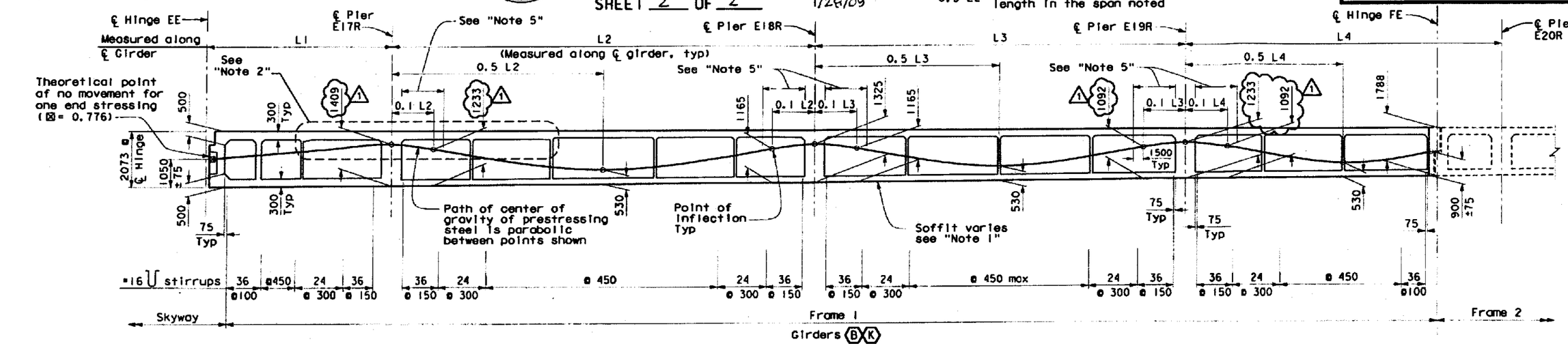

LONGITUDINAL SECTION-FRAME 1

No Scale

Note:
For Prestress Anchorage clearances at Girders (B) & (K) see "Eastbound Girder Details" sheet.

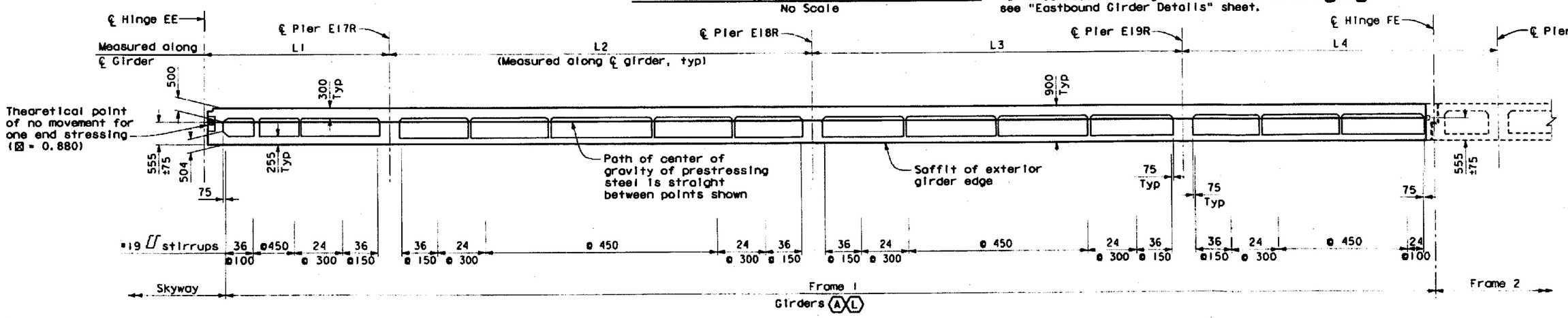

LONGITUDINAL SECTION-FRAME 1

No Scale

Note:
The Contractor shall verify all controlling field dimensions before ordering or fabricating any material.

Note:
Bikeway intermediate diaphragms not shown

ALL DIMENSIONS ARE IN MILLIMETERS UNLESS OTHERWISE SHOWN

DESIGN OVERSIGHT
SAM AKKAD FRANCISCO CAMPIO BERNARD CHAN HASAN EL-BATAN
SIGN OFF DATE 1/27/2009

	BY	CHECKED
DESIGN	M. CHAR	T. DUDLEY
DETAILS	N. MORCILLO/M. ANDRASEK	M. CHAR
QUANTITIES	N. MORCILLO/Y. KIM	V. SIVAKOLUNDU/T. DUDLEY

PREPARED FOR THE STATE OF CALIFORNIA DEPARTMENT OF TRANSPORTATION

MOHAN S. CHAR
PROJECT ENGINEER

BRIDGE NO. 34-0006L/R
KILOMETER POST 1.6

SAN FRANCISCO OAKLAND BAY BRIDGE
EAST SPAN SEISMIC SAFETY PROJECT

OAKLAND APPROACH STRUCTURES - PHASE I

EASTBOUND GIRDER LAYOUT NO. 2

Rev. Date: 5-18-98

ORIGINAL SCALE IN MILLIMETERS FOR REDUCED PLANS 0 10 20 30 40 50 60 70 80 90 100

CU 04
EA 0120L1

DISREGARD PRINTS BEARING EARLIER REVISION DATES

REV. SIGN. DATES SPECIFIED IN NAVY STAGE ON 11 1/21/09 01/30/08 1/20/04 2/18/03 1/24/03 1/24/02 1/31/06 1/28/06

SHEET 99 OF 224

DATE PLOTTED => 1/28/2009 TIME PLOTTED => 1:32:17 PM
USERNAME => AN

STATE OF CALIFORNIA - DEPARTMENT OF TRANSPORTATION

CONTRACT CHANGE ORDER MEMORANDUM

DATE: 1/28/2009 Page 1 of 1

AMER BATA / BEN GHAFGHAZI

FROM: BEN GHAFGHAZI

FILE: **E.A.** 04 - 0120L4
CO-RTE-PM ALA-80-1.6/2.7
FED. NO. NO FED AID

CCO#: **97** SUPPLEMENT#: **0** Category Code: **CHPT**

CONTINGENCY BALANCE (incl. this change) **$9,255,173.20**

COST: **$20,000.00** INCREASE ☑ DECREASE ☐

HEADQUARTERS APPROVAL REQUIRED? ☐ YES ☑ NO

SUPPLEMENTAL FUNDS PROVIDED: **$0.00**

IS THIS REQUEST IN ACCORDANCE WITH ENVIRONMENTAL DOCUMENTS? ☑ YES ☐ NO

CCO DESCRIPTION:

PROJECT DESCRIPTION:
Construct bridge, roadway, building and electrical system.

Original Contract Time:	Time Adj. This Change:	Previously Approved CCO Time Adjustments:	Percentage Time Adjusted: (including this change)	Total # of Unreconciled Deferred Time CCO(s): (including this change)
810 Day(s)	**0** Day(s)	**178** Day(s)	**22** %	**5**

THIS CHANGE ORDER PROVIDES FOR:
Revising the longitudinal pre-stressing profile and P-jack at Frame 1 of Bridge No. 34-0006R superstructure as shown on sheet 2 of 2 of the CCO. Work shall be in accordance with Sections 10-1.52, "Prestressing Concrete," and 10-1.67, "Reinforcement," of the Special Provisions.

This change is necessary to resolve conflicts identified in the shop drawings for the pre-stressing steel. After a review of the shop drawings several conflicts were discovered between the pre-stressing ducts and reinforcing steel. To resolve these conflicts, the longitudinal pre-stressing Center of Gravity, (CG) was adjusted to maintain a minimum 25 mm clearance between transverse ducts and to allow for placement of bent cap rebar. Additional strands were added at girders C, F and J to offset adjustment of pre-stressing CG.

This work will be paid as Extra Work at Force Account for $20,000.00, which can be financed from the contingency fund.

This change has been discussed and concurred with Hasan El-Natur of Structures Design, Jal Birdy of Moffat Nichol, and Lina Ellis of Structures Maintenance.

No adjustment of contract time is warranted since this change does not affect the controlling operation.

CONCURRED BY:

Construction Engineer:	Ben Ghafghazi	Date 1/29/09
Bridge Engineer:	For Mehran Ardakanian	Date 1/29/09
Project Engineer:	Hasan El-Natur, Structures Design	Date 1/27/09
Project Manager:		Date
FHWA Rep.:		Date
Environmental:		Date
Other (specify):	Lina Ellis, Structures Maint.	Date 1/28/09
Other (specify):	Jal Birdy, Moffat Nichol	Date 1/27/09
District Prior Approval By:		Date
HQ (Issue Approve) By:		Date
Resident Engineer's Signature:		Date 1/29/09

ESTIMATE OF COST

	THIS REQUEST	TOTAL TO DATE
ITEMS	$0.00	$0.00
FORCE ACCOUNT	$20,000.00	$20,000.00
AGREED PRICE	$0.00	$0.00
ADJUSTMENT	$0.00	$0.00
TOTAL	$20,000.00	$20,000.00

FEDERAL PARTICIPATION

☐ PARTICIPATING ☐ PARTICIPATING IN PART ☑ NONE
☐ NON-PARTICIPATING (MAINTENANCE) ☐ NON-PARTICIPATING

FEDERAL SEGREGATION (if more than one Funding Source or P.I.P. type)
☑ CCO FUNDED PER CONTRACT ☐ CCO FUNDED AS FOLLOWS

FEDERAL FUNDING SOURCE PERCENT

ADA Notice: For individuals with sensory disabilities, this document is available in alternate formats. For information call: (916) 654-6410 or TDD (916) 654-3880 or write Records and Forms Management, 1120 N Street, MS-89, Sacramento, CA 95814.

STATE OF CALIFORNIA - DEPARTMENT OF TRANSPORTATION

CONTRACT CHANGE ORDER MEMORANDUM

TO: AMER BATA / BEN GHAFGHAZI	FILE: E.A. 04 - 0120L4
FROM: BEN GHAFGHAZI	CO-RTE-PM ALA-80-1.6/2.7
	FED. NO. NO FED AID
CCO#: 97 SUPPLEMENT#: 2 Category Code: CHPT	CONTINGENCY BALANCE (incl. this change): $1,004,598.90
COST: $20,000.00 INCREASE ☑ DECREASE ☐	HEADQUARTERS APPROVAL REQUIRED? ☐ YES ☑ NO
SUPPLEMENTAL FUNDS PROVIDED: $0.00	IS THIS REQUEST IN ACCORDANCE WITH ENVIRONMENTAL DOCUMENTS? ☑ YES ☐ NO
CCO DESCRIPTION: Additional Funds for CCO 97	**PROJECT DESCRIPTION:** Construct bridge, roadway, building and electrical system.

Original Contract Time:	Time Adj. This Change:	Previously Approved CCO Time Adjustments:	Percentage Time Adjusted: (including this change)	Total # of Unreconciled Deferred Time CCO(s): (including this change)
810 Day(s)	0 Day(s)	0 Day(s)	0 %	0

THIS CHANGE ORDER PROVIDES FOR:

Additional funding for modifications to the eastbound Frame 1 prestressing.

The original Change Order No. 97 provided for modifications to the pre-stressing profile and P-jack and Supplement No. 1 provided for modifications to prestressing tendon anchorage. The work was specified to be performed at force account.

The scope of the work has now exceeded the previous estimates and it is now anticipated that additional funding of $20,000.00 will be required to fund the work performed.

The work shall be compensated as extra work at force account at an estimated cost of $20,000.00 which shall be financed from the contract contingency funds. A cost analysis is on file.

No adjustment of contract time is warranted as the change will not affect the controlling operation.

CONCURRED BY:

Construction Engineer:	Ben Ghafghazi	Date 12/28/2010
Bridge Engineer:		Date
Project Engineer:		Date
Project Manager:		Date
FHWA Rep.:		Date
Environmental:		Date
Other (specify):		Date
Other (specify):		Date
District Prior Approval By:		Date
HQ (Issue Approve) By:		Date
Resident Engineer's Signature:		Date 12/28/2010

ESTIMATE OF COST

	THIS REQUEST	TOTAL TO DATE
ITEMS	$0.00	$0.00
FORCE ACCOUNT	$20,000.00	$40,000.00
AGREED PRICE	$0.00	$0.00
ADJUSTMENT	$0.00	$0.00
TOTAL	$20,000.00	$40,000.00

FEDERAL PARTICIPATION

☐ PARTICIPATING ☐ PARTICIPATING IN PART ☑ NONE
☐ NON-PARTICIPATING (MAINTENANCE) ☐ NON-PARTICIPATING

FEDERAL SEGREGATION (if more than one Funding Source or P.I.P. type)
☐ CCO FUNDED PER CONTRACT ☐ CCO FUNDED AS FOLLOWS

FEDERAL FUNDING SOURCE	PERCENT

ADA Notice: For individuals with sensory disabilities, this document is available in alternate formats. For information call: (916) 654-6410 or TDD (916) 654-3880 or write Records and Forms Management, 1120 N Street, MS-89, Sacramento, CA 95814.

STATE OF CALIFORNIA - DEPARTMENT OF TRANSPORTATION

CONTRACT CHANGE ORDER

Change Requested by: Engineer

CCO: 97	Suppl. No. 2	Contract No. 04 - 0120L4	Road ALA-80-1.6/2.7	FED. AID LOC.: NO FED AID

To: **M C M CONSTRUCTION INC**

You are directed to make the following changes from the plans and specifications or do the following described work not included in the plans and specifications for this contract. ***NOTE: This change order is not effective until approved by the Engineer.***

Description of work to be done, estimate of quantities and prices to be paid. (Segregate between additional work at contract price, agreed price and force account.) Unless otherwise stated, rates for rental of equipment cover only such time as equipment is actually used and no allowance will be made for idle time. This last percentage shown is the net accumulated increase or decrease from the original quantity in the Engineer's Estimate.

Extra Work at Force Account:

Provide additional funds for the work specified under the original Change Order No. 97 and Change Order No. 97, Supplement No. 1.

Estimated cost of Extra Work at Force Account $20,000.00

Estimated Cost: Increase ☑ Decrease ☐ **$20,000.00**

By reason of this order the time of completion will be adjusted as follows: 0 days

Submitted by

Signature	Resident Engineer BEN GHAFGHAZI	Date 12/28/2010

Approval Recommended by

Signature	Construction Engineer Ben Ghafghazi	Date 12/28/2010

Engineer Approval by

Signature	Construction Manager HAZZAA EL Mahmoud For Amer Bata	Date 12/29/10

We the undersigned contractor, have given careful consideration to the change proposed and agree, if this proposal is approved, that we will provide all equipn furnish the materials, except as may otherwise be noted above, and perform all services necessary for the work above specified, and will accept as full paymer therefor the prices shown above.

NOTE: If you, the contractor, do not sign acceptance of this order, your attention is directed to the requirements of the specifications as to proceeding with the ordered work and filing a written protest within the time therein specified.

Contractor Acceptance by

Signature NOT	(Print name and title)	Date

STATE OF CALIFORNIA - DEPARTMENT OF TRANSPORTATION

CONTRACT CHANGE ORDER

Change Requested by: Engineer

CCO 98	Suppl. No. 0	Contract No. 04 - 0120L4	Road ALA-80-1.6/2.7	FED. AID LOC.: NO FED AID

To: **M C M CONSTRUCTION INC**

You are directed to make the following changes from the plans and specifications or do the following described work not included in the plans and specifications for this contract. ***NOTE: This change order is not effective until approved by the Engineer.***

Description of work to be done, estimate of quantities and prices to be paid. (Segregate between additional work at contract price, agreed price and force account.) Unless otherwise stated, rates for rental of equipment cover only such time as equipment is actually used and no allowance will be made for idle time. This last percentage shown is the net accumulated increase or decrease from the original quantity in the Engineer's Estimate.

Allow use of #10 @ 150 longitudinal and #13 @ 600 transverse rebar, tied in a grid, in lieu of welded wire mat shown in Detail 1 and Detail 2 on sheet 349 of 643, "Precast Wall and Barrier Slab Details 2," of the contract plans. All work shall be in accordance with Sections 10-1.55, "Precast Wall," and 10-1.67 "Reinforcement," of the Special Provisions.

There shall be no additional cost as a result of this change.

Estimated Cost: Increase ☐ Decrease ☐ **$0.00**

By reason of this order the time of completion will be adjusted as follows: 0 days

Submitted by

Signature	Resident Engineer BEN GHAFGHAZI	Date 3/4/09

Approval Recommended by

Signature	Construction Engineer Ben Ghafghazi	Date 3/4/09

Engineer Approval by

Signature	Construction Engineer Ben Ghafghazi	Date 3/18/09

We the undersigned contractor, have given careful consideration to the change proposed and agree, if this proposal is approved, that we will provide all equipment, furnish the materials, except as may otherwise be noted above, and perform all services necessary for the work above specified, and will accept as full payment therefor the prices shown above.

NOTE: If you, the contractor, do not sign acceptance of this order, your attention is directed to the requirements of the specifications as to proceeding with the ordered work and filing a written protest within the time therein specified.

Contractor Acceptance by

Signature	(Print name and title) EDMUNDO A. PUCHI, TREASURER	Date 3/10/09

STATE OF CALIFORNIA - DEPARTMENT OF TRANSPORTATION

CONTRACT CHANGE ORDER MEMORANDUM

DATE: 2/25/2009 Page 1 of 1

TO: AMER BATA / BEN GHAFGHAZI

FROM: BEN GHAFGHAZI

FILE: E.A. 04 - 0120L4
CO-RTE-PM ALA-80-1.6/2.7
FED. NO. NO FED AID

CCO#: 98 | SUPPLEMENT#: 0 | Category Code: CMPX

CONTINGENCY BALANCE (incl. this change) $8,729,749.20

COST: $0.00 INCREASE ☐ DECREASE ☐

HEADQUARTERS APPROVAL REQUIRED? ☐ YES ☑ NO

SUPPLEMENTAL FUNDS PROVIDED: $0.00

IS THIS REQUEST IN ACCORDANCE WITH ENVIRONMENTAL DOCUMENTS? ☑ YES ☐ NO

CCO DESCRIPTION:
Replace Welded Wire Mat with Rebar

PROJECT DESCRIPTION:
Construct bridge, roadway, building and electrical system.

Original Contract Time:	Time Adj. This Change:	Previously Approved CCO Time Adjustments:	Percentage Time Adjusted: (including this change)	Total # of Unreconciled Deferred Time CCO(s): (including this change)
810 Day(s)	0 Day(s)	184 Day(s)	23 %	5

THIS CHANGE ORDER PROVIDES FOR:

Allowing the use of #10 @ 150 longitudinal and #13 @ 600 transverse rebar, tied in a grid, in lieu of welded wire mat shown in Detail 1 and Detail 2 on sheet 349 of 643, "Precast Wall and Barrier Slab Details 2," of the contract plans. All work shall be in accordance with Sections 10-1.55, "Precast Wall," and 10-1.67 "Reinforcement," of the Special Provisions.

The details on the plans show the use of a coupler for splicing the welded wire mat to the connector on the precast wall. This change is necessary because there are no couplers on Caltrans approved list that will work with the smooth wires of the welded wire mat. The Contractor will be allowed to place a grid of rebar in lieu of the welded wire mat. The rebar is compatible with Caltrans' pre approved couplers.

This change has been discussed and concurred with Samad Hamoud, Structures Design; Tony Mullin, METS; Lina Ellis, Structures Maintenance; and Kathryn Griswell, ERS Specialist, Office of Design and Technical Services.

There shall be no additional cost as a result of this CCO.

No adjustment of contract time is warranted since this change does not affect the controlling operation.

CONCURRED BY:

Construction Engineer:	Ben Ghafghazi	Date	3/4/09
Bridge Engineer:	Mehran Ardakanian	Date	03/04/09
Project Engineer:	Samad Hamoud, Str. Design	Date	1/8/09
Project Manager:		Date	
FHWA Rep.:		Date	
Environmental:		Date	
Other (specify):	Kathryn Griswell, ERS Specialist	Date	1/8/09
Other (specify):	Tony Mullin, METS	Date	1/6/09
District Prior Approval By:		Date	
HQ (Issue Approve) By:		Date	
Resident Engineer's Signature:		Date	3/4/09

ESTIMATE OF COST

	THIS REQUEST	TOTAL TO DATE
ITEMS	$0.00	$0.00
FORCE ACCOUNT	$0.00	$0.00
AGREED PRICE	$0.00	$0.00
ADJUSTMENT	$0.00	$0.00
TOTAL	$0.00	$0.00

FEDERAL PARTICIPATION

☐ PARTICIPATING ☐ PARTICIPATING IN PART ☑ NONE
☐ NON-PARTICIPATING (MAINTENANCE) ☐ NON-PARTICIPATING

FEDERAL SEGREGATION (if more than one Funding Source or P.I.P. type)
☑ CCO FUNDED PER CONTRACT ☐ CCO FUNDED AS FOLLOWS

FEDERAL FUNDING SOURCE PERCENT

ADA Notice: For individuals with sensory disabilities, this document is available in alternate formats. For information call: (916) 654-6410 or TDD (916) 654-3880 or write Records and Forms Management, 1120 N Street, MS-89, Sacramento, CA 95814.

STATE OF CALIFORNIA - DEPARTMENT OF TRANSPORTATION

CONTRACT CHANGE ORDER

Change Requested by: Engineer

CCO 99	Suppl. No. 0	Contract No. 04 - 0120L4	Road ALA-80-1.6/2.7	FED. AID LOC.: NO FED AID

M C M CONSTRUCTION INC

You are directed to make the following changes from the plans and specifications or do the following described work not included in the plans and specifications for this contract. ***NOTE: This change order is not effective until approved by the Engineer.***

Description of work to be done, estimate of quantities and prices to be paid. (Segregate between additional work at contract price, agreed price and force account.) Unless otherwise stated, rates for rental of equipment cover only such time as equipment is actually used and no allowance will be made for idle time. This last percentage shown is the net accumulated increase or decrease from the original quantity in the Engineer's Estimate.

Extra Work at Force Account:

Provide labor, equipment and materials as necessary to modify previously installed Pipe Key Assembly (Type A) at Pier E18R and E19R as follows:

E18R -- Remove top 73 mm of pipe keys
E19R -- Remove top 221 mm of pipe keys

The exposed end shall be ground flush and painted with zinc-rich primer. All work shall be in accordance with Section 10-1.92, "Miscellaneous Metal (Bridge)," of the Special Provisions.

Estimated cost of Extra Work at Force Account $10,000.00

Estimated Cost: Increase ☑ **Decrease** ☐ **$10,000.00**

By reason of this order the time of completion will be adjusted as follows: 0 days

Submitted by

Signature	Resident Engineer BEN GHAFGHAZI	Date 3/4/09

Approval Recommended by

Signature	Construction Engineer Ben Ghafghazi	Date 3/4/09

Engineer Approval by

Signature	Construction Engineer Ben Ghafghazi	Date 3/18/09

We the undersigned contractor, have given careful consideration to the change proposed and agree, if this proposal is approved, that we will provide all equipment, furnish the materials, except as may otherwise be noted above, and perform all services necessary for the work above specified, and will accept as full payment therefor the prices shown above.

NOTE: If you, the contractor, do not sign acceptance of this order, your attention is directed to the requirements of the specifications as to proceeding with the ordered work and filing a written protest within the time therein specified.

Contractor Acceptance by

Signature	(Print name and title) EDMUNDO A. PUCHI, TREASURER	Date 3/10/09

STATE OF CALIFORNIA - DEPARTMENT OF TRANSPORTATION

CONTRACT CHANGE ORDER MEMORANDUM

DATE: 3/3/2009 Page 1 of 1

TO: AMER BATA / BEN GHAFGHAZI	FILE: E.A. 04 - 0120L4
FROM: BEN GHAFGHAZI	CO-RTE-PM ALA-80-1.6/2.7
	FED. NO. NO FED AID
CCO#: 99 SUPPLEMENT#: 0 Category Code: CHPT	CONTINGENCY BALANCE (incl. this change) $8,659,749.20
COST: $10,000.00 INCREASE ☑ DECREASE ☐	HEADQUARTERS APPROVAL REQUIRED? ☐ YES ☑ NO
SUPPLEMENTAL FUNDS PROVIDED: $0.00	IS THIS REQUEST IN ACCORDANCE WITH ENVIRONMENTAL DOCUMENTS? ☑ YES ☐ NO
CCO DESCRIPTION: Modify pipe keys at E18R and E19R.	**PROJECT DESCRIPTION:** Construct bridge, roadway, building and electrical system.

Original Contract Time:	Time Adj. This Change:	Previously Approved CCO Time Adjustments:	Percentage Time Adjusted: (including this change)	Total # of Unreconciled Deferred Time CCO(s): (including this change)
810 Day(s)	0 Day(s)	184 Day(s)	23 %	8

THIS CHANGE ORDER PROVIDES FOR:

Modifying previously installed Pipe Key Assembly (Type A) at Pier E18R and E19R by removing top 73 mm of pipe keys at E18R and removing top 221 mm of pipe keys at E19R. Exposed ends will be ground flush and painted with zinc-rich primer. All work shall be in accordance with Section 10-1.92, "Miscellaneous Metal (Bridge)," of the Special Provisions.

This change is necessary to resolve a conflict between the pipe key assemblies, bent cap reinforcing, and pre-stressing ducts as determined from Integrated Shop Drawings (ISDs). Shortening the pipe keys will alleviate the conflicts without affecting the structural integrity of the bridge. These changes are being added under CCO as required by Section 5-1.15, "Integrated Shop Drawings," of the Special Provisions.

This work will be paid as Extra Work at Force Account for $10,000.00, which can be financed from the contingency fund.

This change has been discussed and concurred with Hasan El-Natur of Structures Design, Tony Mullen of METS, and Mohan Char, structures designer for LAN Engineering. Maintenance concurrence is not necessary because this change addresses a constuctuability issue.

No adjustment of contract time is warranted since this change does not affect the controlling operation.

CONCURRED BY:			
Construction Engineer:	Ben Ghafghazi	Date	3/4/09
Bridge Engineer:	Mehran Ardakanian	Date	3/4/09
Project Engineer:	Hasan El-Natur, Structures Design	Date	2/10/09
Project Manager:		Date	
FHWA Rep.:		Date	
Environmental:		Date	
Other (specify):	Tony Mullen, METS	Date	2/11/09
Other (specify):	Mohan Char, LAN Engineering	Date	2/10/09
District Prior Approval By:		Date	
HQ (Issue Approve) By:		Date	
Resident Engineer's Signature:		Date	3/4/09

ESTIMATE OF COST

	THIS REQUEST	TOTAL TO DATE
ITEMS	$0.00	$0.00
FORCE ACCOUNT	$10,000.00	$10,000.00
AGREED PRICE	$0.00	$0.00
ADJUSTMENT	$0.00	$0.00
TOTAL	$10,000.00	$10,000.00

FEDERAL PARTICIPATION

☐ PARTICIPATING ☐ PARTICIPATING IN PART ☑ NONE
☐ NON-PARTICIPATING (MAINTENANCE) ☐ NON-PARTICIPATING

FEDERAL SEGREGATION (if more than one Funding Source or P.I.P. type)
☑ CCO FUNDED PER CONTRACT ☐ CCO FUNDED AS FOLLOWS

FEDERAL FUNDING SOURCE	PERCENT

ADA Notice: For individuals with sensory disabilities, this document is available in alternate formats. For information call: (916) 654-6410 or TDD (916) 654-3880 or write Records and Forms Management, 1120 N Street, MS-89, Sacramento, CA 95814.

CONTRACT CHANGE ORDER

Change Requested by: Engineer

CCO 100	Suppl. No. 0	Contract No. 04 - 0120L4	Road ALA-80-1.6/2.7	FED. AID LOC.: NO FED AID

M C M CONSTRUCTION INC

You are directed to make the following changes from the plans and specifications or do the following described work not included in the plans and specifications for this contract. ***NOTE: This change order is not effective until approved by the Engineer.***

Description of work to be done, estimate of quantities and prices to be paid. (Segregate between additional work at contract price, agreed price and force account.) Unless otherwise stated, rates for rental of equipment cover only such time as equipment is actually used and no allowance will be made for idle time. This last percentage shown is the net accumulated increase or decrease from the original quantity in the Engineer's Estimate.

Extra Work at Force Account:

Provide labor, equipment, and materials necessary to modify bikepath railing per sheets 2 of 6 through 6 of 6 of this CCO. All work shall be in accordance with Section 10-1.98, "Bikepath Railing," of the Special Provisions.

Estimated cost of Extra Work at Force Account $20,000.00

Estimated Cost: Increase ☑ **Decrease** ☐ **$20,000.00**

By reason of this order the time of completion will be adjusted as follows: 0 days

Submitted by

Signature	Resident Engineer BEN GHAFGHAZI	Date 6/8/09

Approval Recommended by

Signature	Construction Engineer Ben Ghafghazi	Date 6/8/09

Engineer Approval by

Signature	Construction Engineer Ben Ghafghazi	Date 6/10/2010

We the undersigned contractor, have given careful consideration to the change proposed and agree, if this proposal is approved, that we will provide all equipment, furnish the materials, except as may otherwise be noted above, and perform all services necessary for the work above specified, and will accept as full payment therefor the prices shown above.

NOTE: If you, the contractor, do not sign acceptance of this order, your attention is directed to the requirements of the specifications as to proceeding with the ordered work and filing a written protest within the time therein specified.

Contractor Acceptance by

Signature	(Print name and title) EDMUNDO A. PUCHI, TREASURER	Date 10/5/09

DIST.	COUNTY	ROUTE	KILOMETER POST TOTAL PROJECT	SHEET NO.	TOTAL SHEETS
04	Ala	80	1.6/2.7	297R1	643

Caltrans Metric

REGISTERED ENGINEER - CIVIL

1-29-07
PLANS APPROVAL DATE

REGISTERED PROFESSIONAL ENGINEER A.L. ELY No. 18880 Exp. 6-30-07 CIVIL STATE OF CALIFORNIA

The State of California or its officers or agents shall not be responsible for the accuracy or completeness of electronic copies of this plan sheet.

T.Y. LIN / MOFFATT & NICHOL
TWO HARRISON STREET, SUITE 500
SAN FRANCISCO, CA 94105

To get to the Caltrans web site, go to: http://www.dot.ca.gov

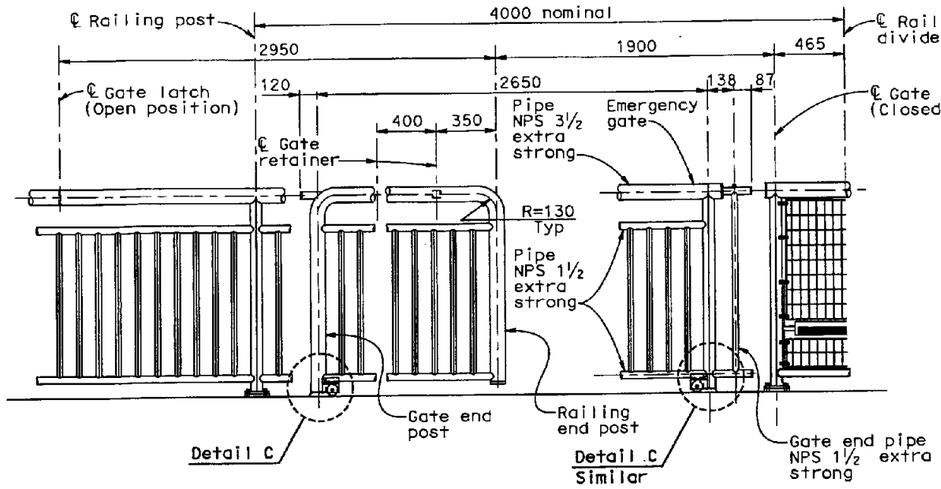

ELEVATION - EMERGENCY GATE
1:20

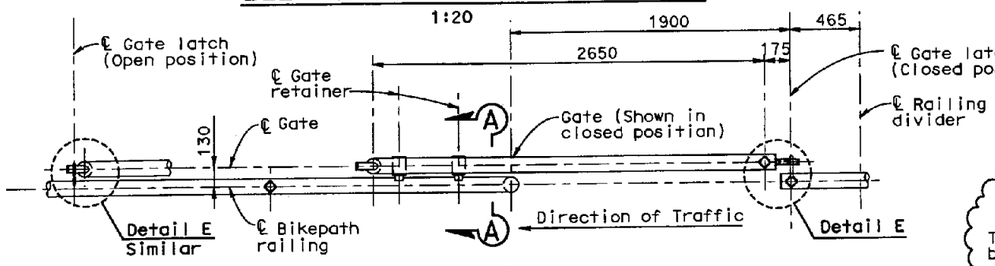

PLAN AT TOP RAIL
1:20

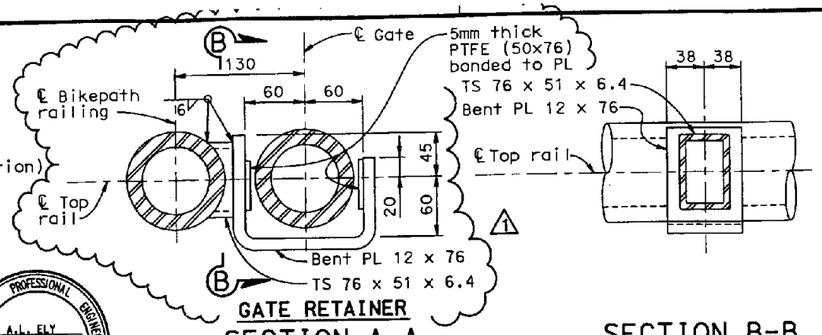

GATE RETAINER
SECTION A-A
1:3

SECTION B-B
1:3

REGISTERED PROFESSIONAL ENGINEER A.L. ELY No. 18880 Exp. 6-30-09 CIVIL STATE OF CALIFORNIA

STAMP IS VALID FOR REV 1 ONLY

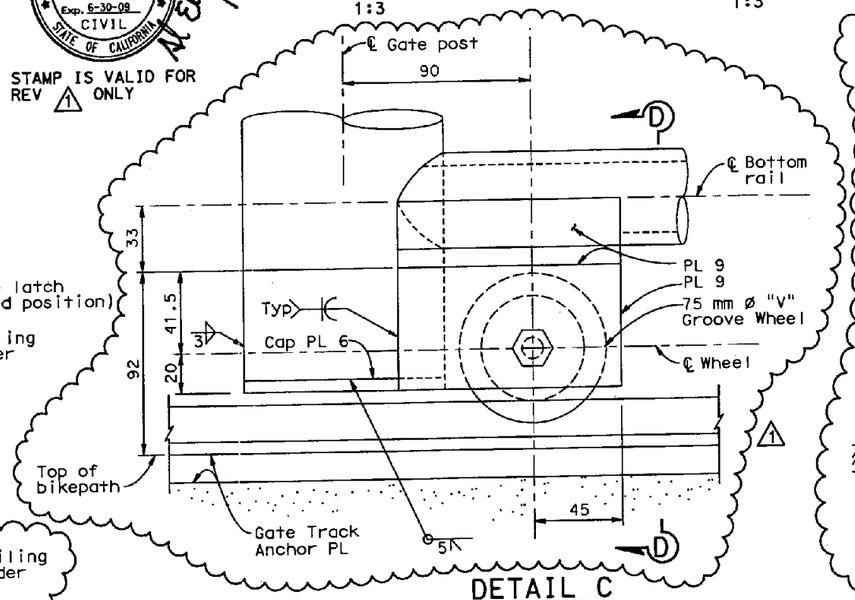

DETAIL C
1:1.5

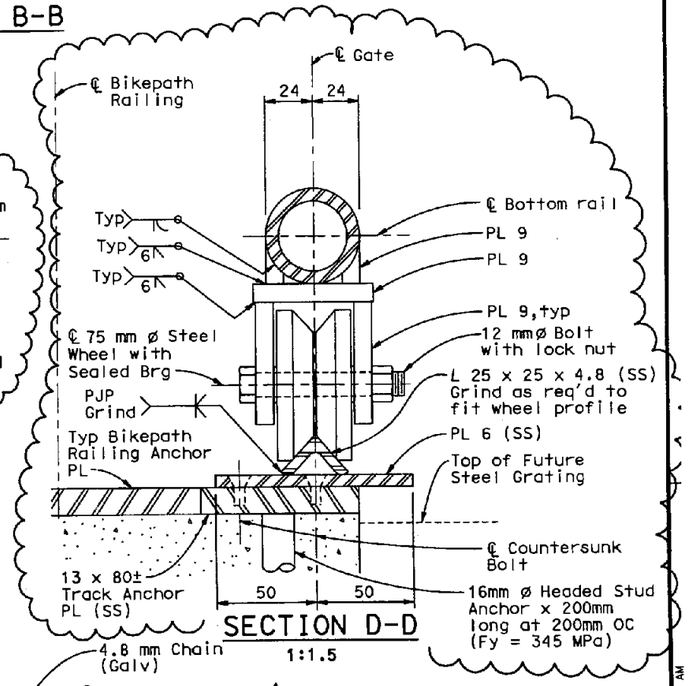

SECTION D-D
1:1.5

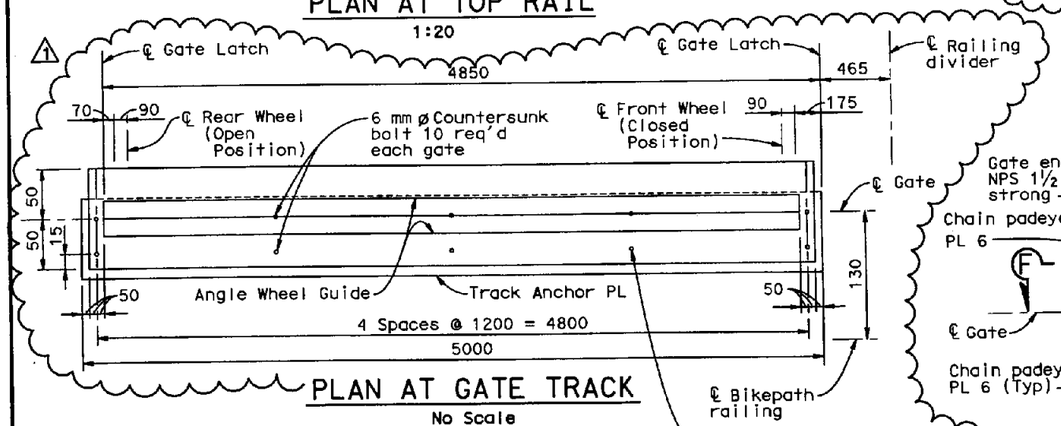

PLAN AT GATE TRACK
No Scale

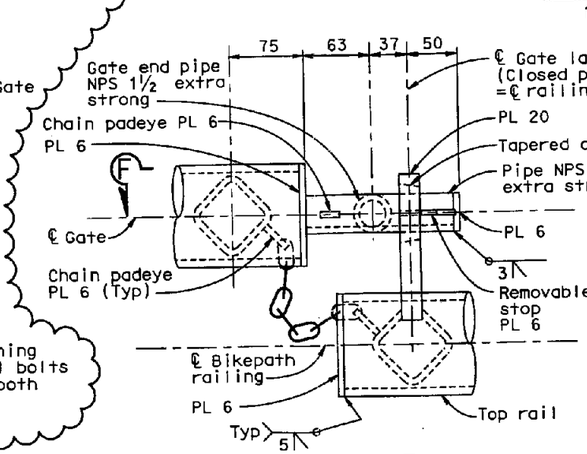

DETAIL E
1:3

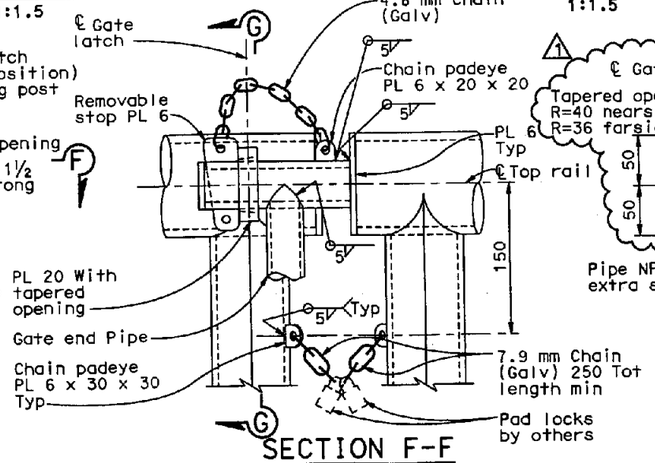

SECTION F-F
1:3

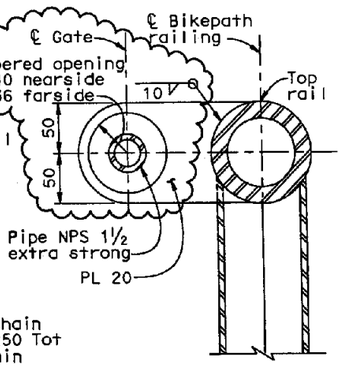

SECTION G-G
1:3

MARK	DATE	DESCRIPTIONS	BY	CH'D
1	3/5/09	Revised Gate Details	ALE	JNB

REVISIONS

CONTRACT CHANGE ORDER NO. 100
SHEET 2 OF 6 3/11/09

ALL DIMENSIONS ARE IN MILLIMETERS UNLESS OTHERWISE SHOWN

DESIGN OVERSIGHT
SAM AKKAD FRANCISCO CARPIO BERNARD CHAN HASAN EK-MATUR
3/6/09
SIGN OFF DATE

DESIGN	BY Shangkuan	CHECKED Atiqullah	
DETAILS	BY van Ryn/Zucchi/Mai	CHECKED Jain	
QUANTITIES	BY Liao	CHECKED E. Nichol	

PREPARED FOR THE STATE OF CALIFORNIA DEPARTMENT OF TRANSPORTATION

Jai Birdy
PROJECT ENGINEER

CU 04
EA 0120L1

BRIDGE NO. 34-0006 L/R
KILOMETER POST 1.6

SAN FRANCISCO OAKLAND BAY BRIDGE
EAST SPAN SEISMIC SAFETY PROJECT

OAKLAND APPROACH STRUCTURES-PHASE 1

BIKEPATH RAILING DETAILS NO.4

DISREGARD PRINTS BEARING EARLIER REVISION DATES — REVISION DATES (PRELIMINARY STAGE ONLY) 3/5/09 1/28/03 10/28/03 10/29/04 2/28/05 5/27/05 11/14/05 1/27/06 4/13/06 7/28/06

SHEET 184 OF 224

Rev. Date: 5-18-98

ORIGINAL SCALE IN MILLIMETERS FOR REDUCED PLANS 0 10 20 30 40 50 60 70 80 90 100

FILE => j:\civil\4141\100%\oak\CCO 030609\04-012011-34-006-u-ssbikerail4.dgn

USERNAME => fsomson DATE PLOTTED => 3/6/2009 TIME PLOTTED => 11:41:22 AM

DIST.	COUNTY	ROUTE	KILOMETER POST TOTAL PROJECT	SHEET NO.	TOTAL SHEETS
04	Ala	80	1.6/2.7	294R1	643

REGISTERED ENGINEER - CIVIL

1-29-07

PLANS APPROVAL DATE

REGISTERED PROFESSIONAL ENGINEER A.L. ELY No. 18880 Exp. 6-30-07 CIVIL STATE OF CALIFORNIA

The State of California or its officers or agents shall not be responsible for the accuracy or completeness of electronic copies of this plan sheet.

T.Y. LIN / MOFFATT & NICHOL
TWO HARRISON STREET, SUITE 500
SAN FRANCISCO, CA 94105

To get to the Caltrans web site, go to: http://www.dot.ca.gov

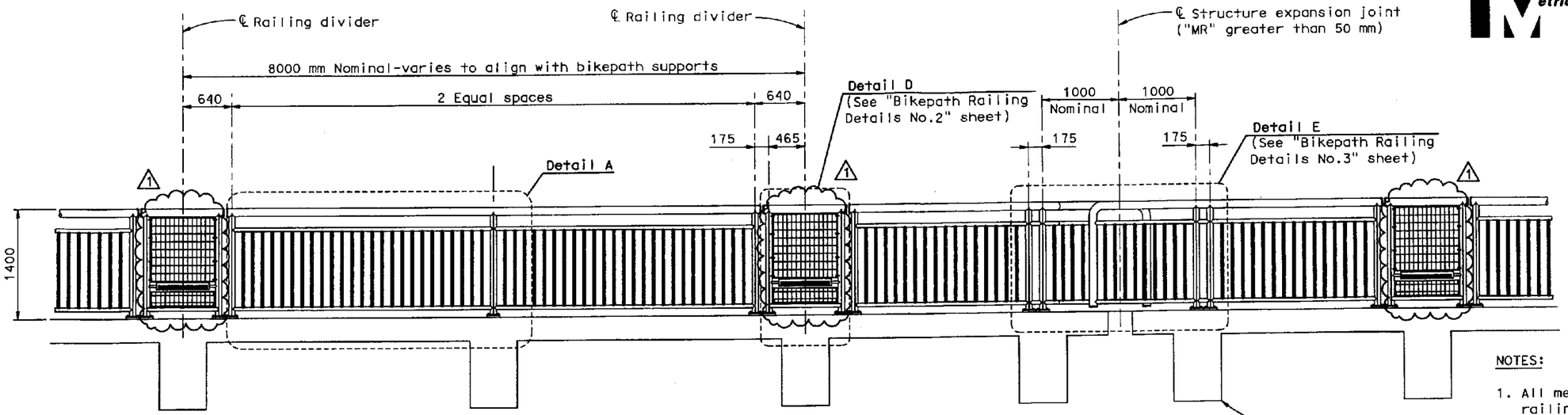

BIKEPATH RAILING-TYPICAL ELEVATION

1:30

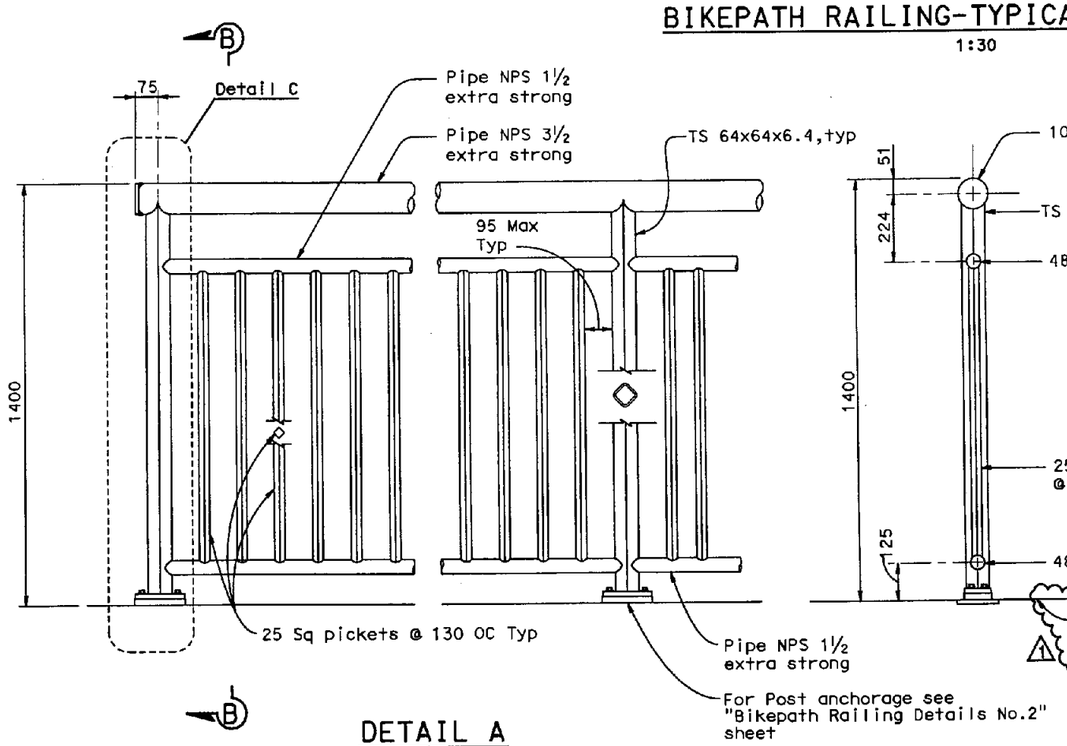

DETAIL A

1:10

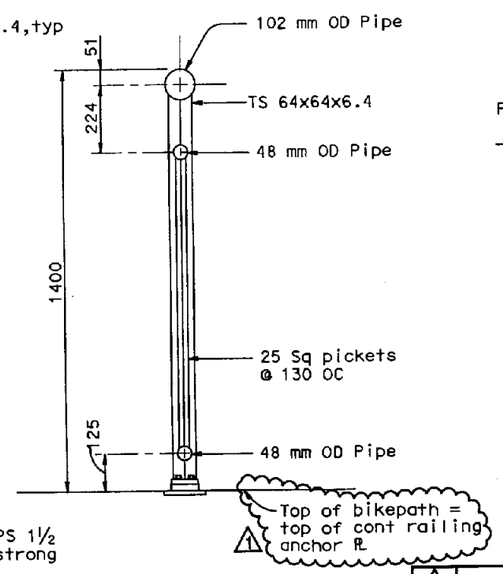

SECTION B-B

1:10

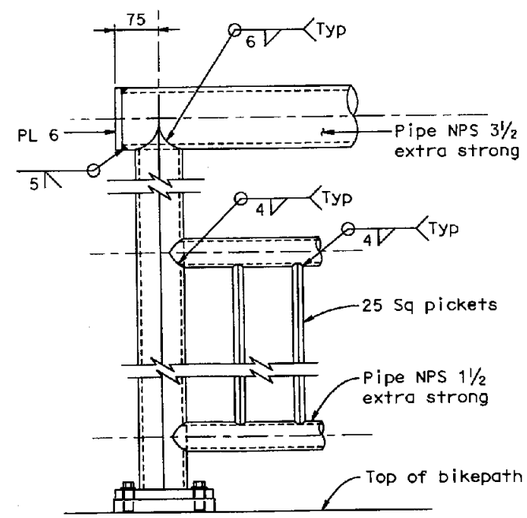

DETAIL C

1:5

MARK	DATE	DESCRIPTIONS	BY	CH'D
1	3/5/09	Note added and Railing Divider	ALE	JNB
		Grill revised		

REVISIONS

REGISTERED PROFESSIONAL ENGINEER A.L. ELY No. 18880 Exp. 6-30-09 CIVIL STATE OF CALIFORNIA

STAMP IS VALID FOR REV 1 ONLY

NOTES:

1. All metal (except stainless steel) parts of railing assembly including grill shall be coated
2. Railing posts shall comform to ASTM A500 Grade C (Fy=345MPa).
3. Railing shall conform to vertical and horizontal alignment of bikepath.
4. Posts and pickets shall be perpendicular to the profile grade of the bikepath and vertical to the cross-slope of the bikepath. Rails shall be parallel to top of bikepath. Railing grill vertical bars shall be parallel to railing posts and grill horizontal bars shall be parallel to rails.
5. Rails shall be shop bent or fabricated to fit horizontal curve when radius is less than 300 m.
6. All exposed welds shall be ground smooth.
7. Expansion joints shall be located in the railing panel spanning deck or wall joints, see "Bikepath Railing Details No.3" sheet.
8. Emergency gate access shall be provided thru the inside bikepath railing (railing located nearest roadway) at intervals not exceeding 80 m.
9. Welding to stainless steel shall be in accordance with AWS D1.6-1999.
10. Any shims utilized to adjust railing alignment during installation shall be full width galv steel shims that are isolated from stainless steel plates by dielectric material. (1)

ALL DIMENSIONS ARE IN MILLIMETERS UNLESS OTHERWISE SHOWN

CONTRACT CHANGE ORDER NO. 100
SHEET 3 OF 6 3/11/09

DESIGN OVERSIGHT: SAM ARKAD, FRANCISCO CARPIO, BERNARD CHAN, HASAN EL-NATUR — 3/6/09
SIGN OFF DATE

DESIGN	BY Shangkuan	CHECKED Atiqullah
DETAILS	BY van Ryn/Zucchi/Mai	CHECKED Jain
QUANTITIES	BY Liao	CHECKED E. Nichol

Rev. Date: 5-18-98

ORIGINAL SCALE IN MILLIMETERS FOR REDUCED PLANS 0 10 20 30 40 50 60 70 80 90 100

PREPARED FOR THE STATE OF CALIFORNIA DEPARTMENT OF TRANSPORTATION

Jal Birdy
PROJECT ENGINEER

CU 04
EA 0120L1

BRIDGE NO. 34-0006 L/R
KILOMETER POST 1.6

DISREGARD PRINTS BEARING EARLIER REVISION DATES

REVISION DATES (PRELIMINARY STAGE ONLY): 12/23/04 3/5/09 10/20/03 10/29/04 2/14/05 5/24/05 11/14/05 1/31/06 4/17/06 7/28/06

SHEET 181 OF 224

SAN FRANCISCO OAKLAND BAY BRIDGE
EAST SPAN SEISMIC SAFETY PROJECT

OAKLAND APPROACH STRUCTURES-PHASE 1

BIKEPATH RAILING DETAILS NO.1

FILE => j:\civil\4141\100%\oak\CCO 030609\04-012011-34-006-u-ssbikerail1.dgn

USERNAME => fsamson DATE PLOTTED => 3/6/2009 TIME PLOTTED => 10:32:19 AM

To get to the Caltrans web site, go to: http://www.dot.ca.gov

Caltrans Metric

DIST.	COUNTY	ROUTE	KILOMETER POST TOTAL PROJECT	SHEET NO.	TOTAL SHEETS
04	Ala	80	1.6/2.7	295R1	643

REGISTERED ENGINEER - CIVIL

1-29-07
PLANS APPROVAL DATE

REGISTERED PROFESSIONAL ENGINEER A.L. ELY No. 18880 Exp. 6-30-07 CIVIL STATE OF CALIFORNIA

The State of California or its officers or agents shall not be responsible for the accuracy or completeness of electronic copies of this plan sheet.

T.Y. LIN / MOFFATT & NICHOL
TWO HARRISON STREET, SUITE 500
SAN FRANCISCO, CA 94105

REGISTERED PROFESSIONAL ENGINEER A.L. ELY No. 18880 Exp. 6-30-09 CIVIL STATE OF CALIFORNIA

STAMP IS VALID FOR REV 1 ONLY

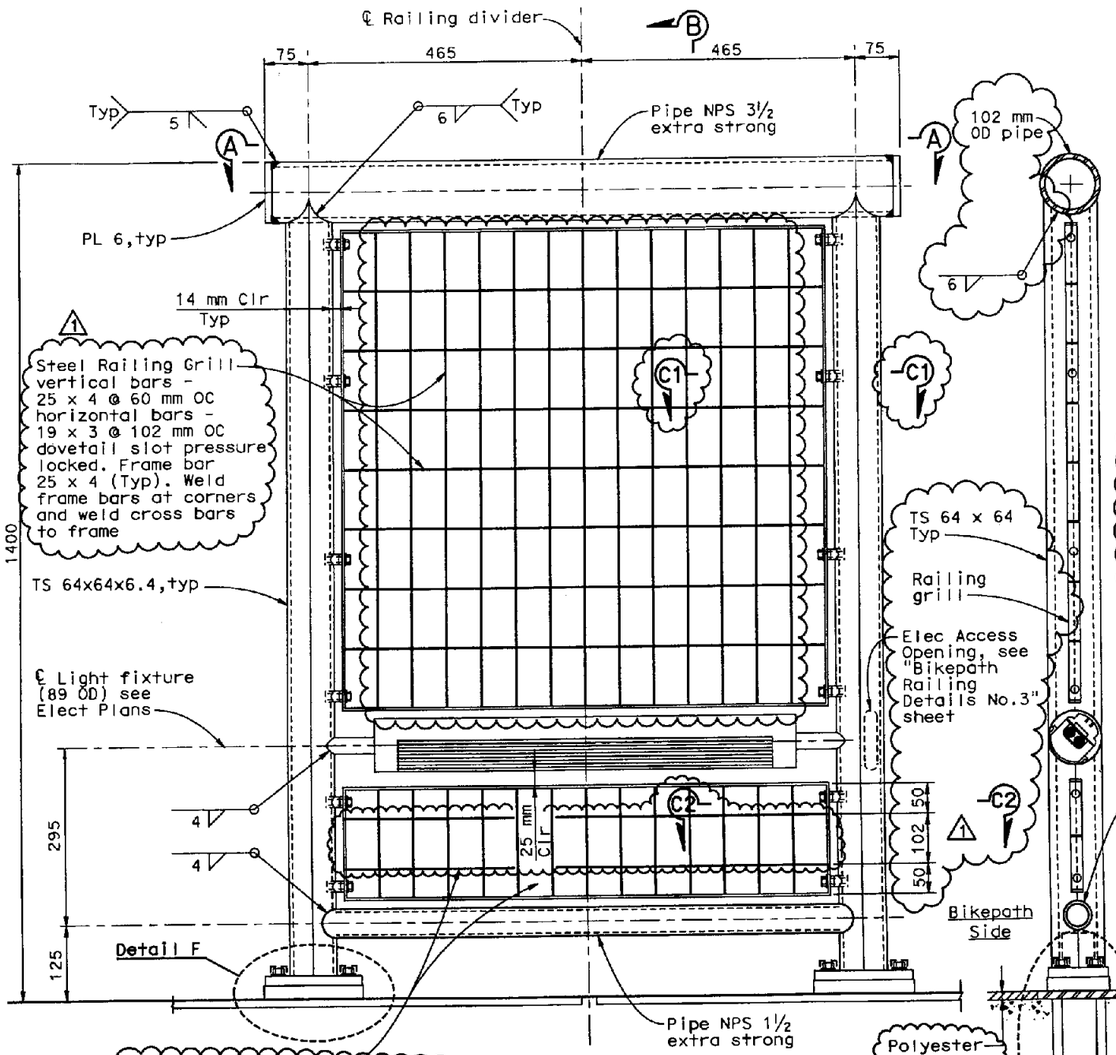

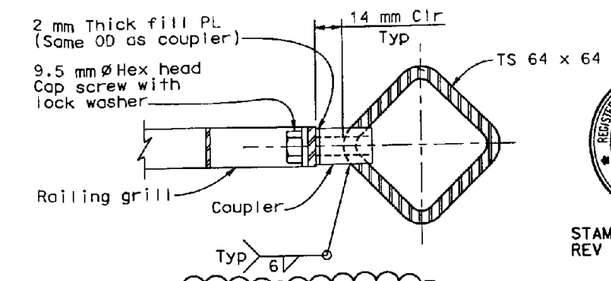

SECTION C1-C1
(Typ above light fixture)
1:1.5

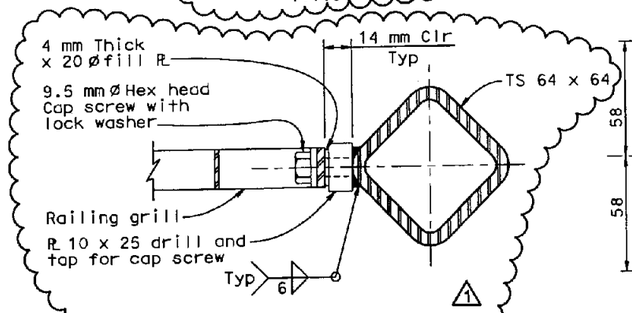

SECTION C2-C2
(Typ below light fixture)
1:1.5

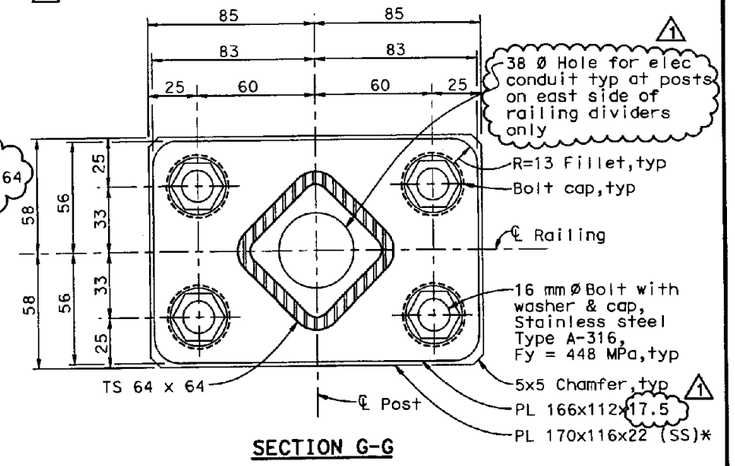

SECTION G-G

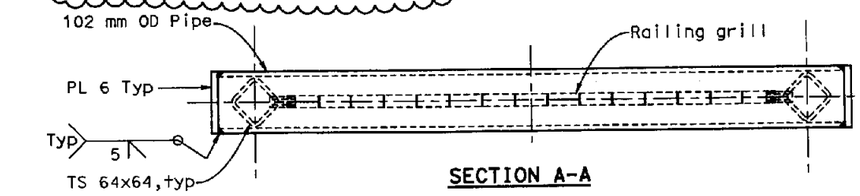

SECTION A-A

TYPICAL RAILING DIVIDER
1:5

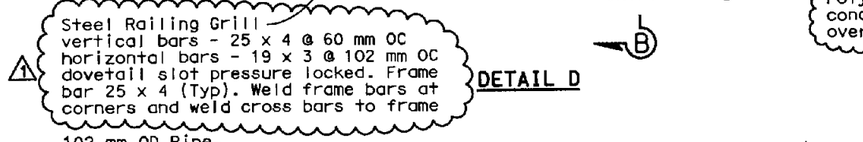

DETAIL D

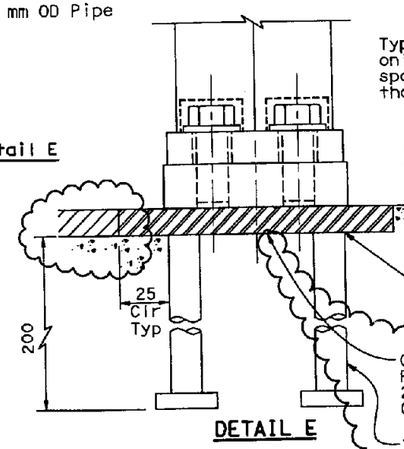

SECTION B-B

DETAIL E

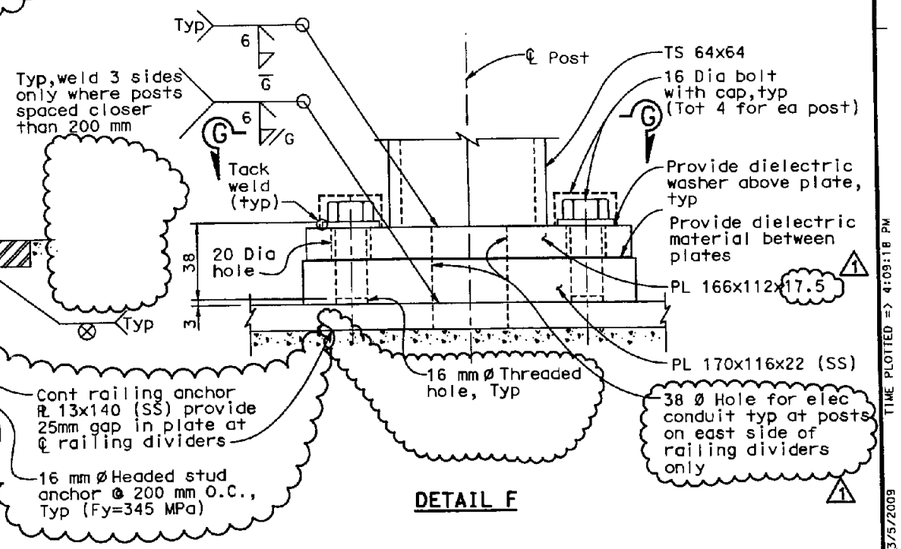

DETAIL F

TYPICAL POST ANCHORAGE
1:1.5

MARK	DATE	DESCRIPTIONS	BY	CH'D
1	3/5/09	Grill revised to match Skyway, and Light fixture conduit entrance revised	ALE	JNB

REVISIONS

ALL DIMENSIONS ARE IN MILLIMETERS UNLESS OTHERWISE SHOWN

CONTRACT CHANGE ORDER NO. 100
SHEET 4 OF 6 3/11/09

SAN FRANCISCO OAKLAND BAY BRIDGE
EAST SPAN SEISMIC SAFETY PROJECT

OAKLAND APPROACH STRUCTURES-PHASE 1

BIKEPATH RAILING DETAILS NO.2

DESIGN OVERSIGHT
SAM AKKAD FRANCISCO CARPIO BERNARD CHAN HASAN EX-NATUR
8-10-06
SIGN OFF DATE
3/6/09

	BY	CHECKED
DESIGN	Shangkuan	Atiqullah
DETAILS	van Ryn/Zucchi/Mai	Jain
QUANTITIES	Liao	E. Nichol

PREPARED FOR THE STATE OF CALIFORNIA DEPARTMENT OF TRANSPORTATION

Jal Birdy
PROJECT ENGINEER

BRIDGE NO. 34-0006 L/R
KILOMETER POST 1.6

CU 04
EA 0120L1

DISREGARD PRINTS BEARING EARLIER REVISION DATES
REVISION DATES (PRELIMINARY STAGE ONLY) 12/22/03 3/5/09 10/28/03 10/28/04 2/14/05 6/24/05 11/14/05 1/31/06 4/13/06 7/24/06

SHEET 182 OF 224

ORIGINAL SCALE IN MILLIMETERS FOR REDUCED PLANS 0 10 20 30 40 50 60 70 80 90 100

Rev. Date: 5-18-98

FILE => J:\civil\4141\100%\cok\CCO 030609\04-012011-34-006-u-ssbikerail2.dgn

USERNAME => fsamson DATE PLOTTED => 3/5/2009 TIME PLOTTED => 4:09:18 PM

DIST.	COUNTY	ROUTE	KILOMETER POST TOTAL PROJECT	SHEET NO.	TOTAL SHEETS
04	Ala	80	1.6/2.7	296R1	643

REGISTERED ENGINEER - CIVIL
1-29-07
PLANS APPROVAL DATE

REGISTERED PROFESSIONAL ENGINEER A.L. ELY No. 18880 Exp. 6-30-07 CIVIL STATE OF CALIFORNIA

The State of California or its officers or agents shall not be responsible for the accuracy or completeness of electronic copies of this plan sheet.

T.Y. LIN / MOFFATT & NICHOL
TWO HARRISON STREET, SUITE 500
SAN FRANCISCO, CA 94105

To get to the Caltrans web site, go to: http://www.dot.ca.gov

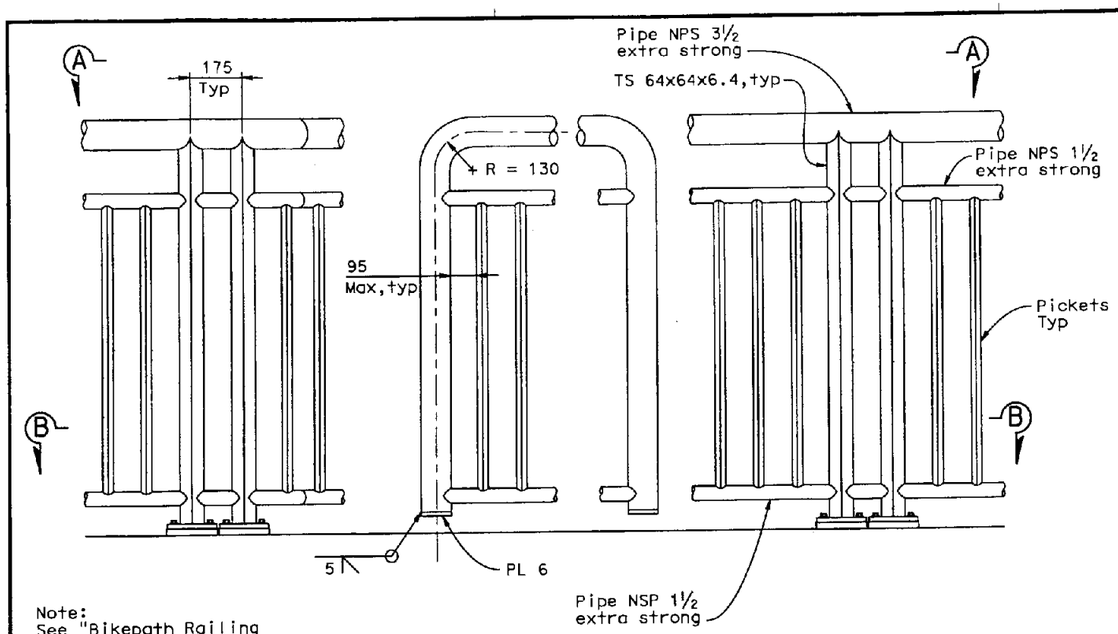

Note:
See "Bikepath Railing Details No.1" sheet for additional details.

DETAIL E

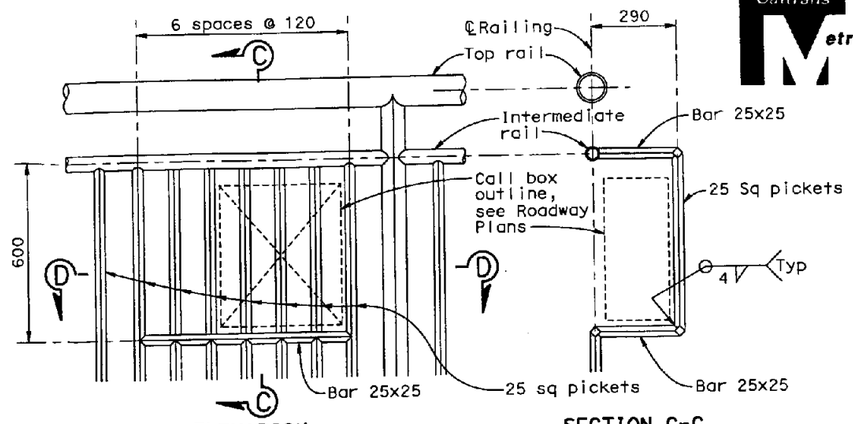

ELEVATION

SECTION C-C

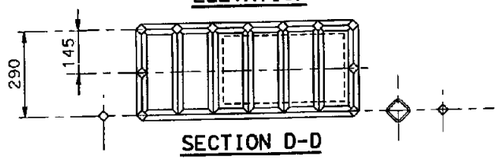

SECTION D-D

CALL BOX MOUNTING DETAIL

1:10

MARK	DATE	DESCRIPTIONS	BY	CH'D
1	3/5/09	Lighting Fixture Conduit Access	ALE	JNB
		detail added		

REVISIONS

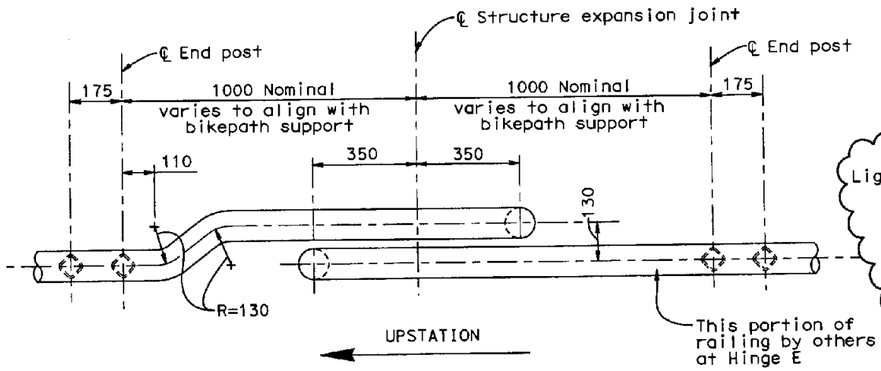

SECTION A-A

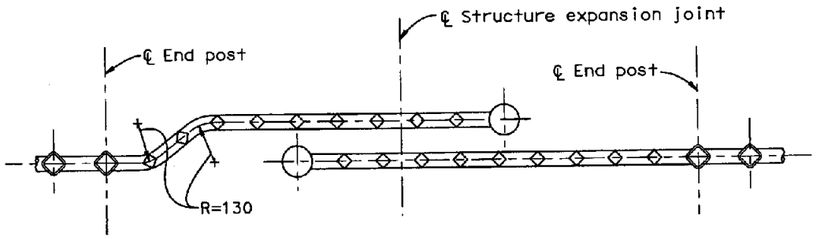

SECTION B-B

RAILING EXPANSION JOINT DETAILS MR > 50

(For use at structure expansion joints with "MR" greater than 50 mm)
1:10

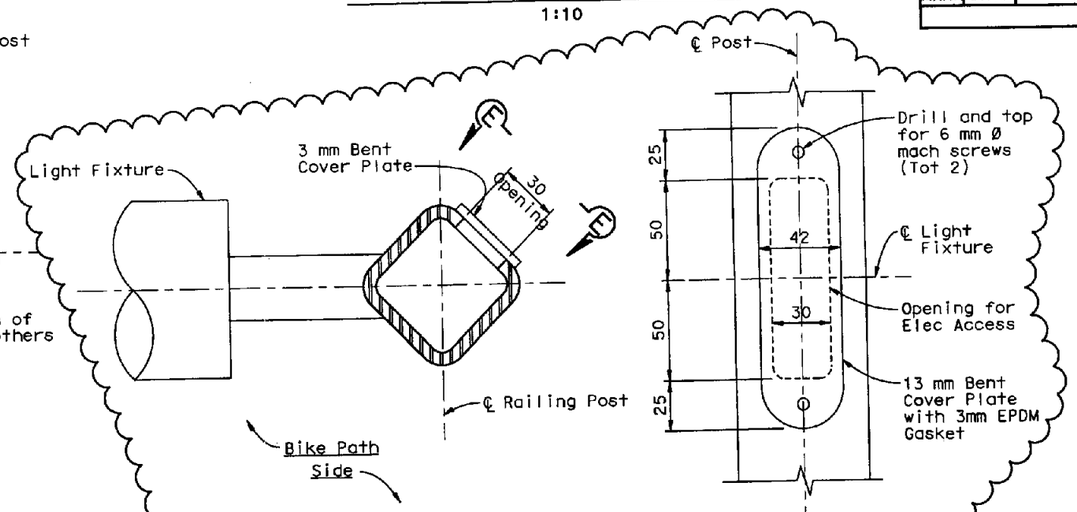

PLAN

SECTION E-E

ELECTRICAL ACCESS OPENING AT BIKEPATH LIGHT FIXTURE

(Required at Posts on east side of Railing Dividers only)
1:1.5

REGISTERED PROFESSIONAL ENGINEER A.L. ELY No. 18880 Exp. 6-30-09 CIVIL STATE OF CALIFORNIA

STAMP IS VALID FOR REV 1 ONLY

CONTRACT CHANGE ORDER NO. 100
SHEET 5 OF 6 3/11/09

ALL DIMENSIONS ARE IN MILLIMETERS UNLESS OTHERWISE SHOWN

SAN FRANCISCO OAKLAND BAY BRIDGE
EAST SPAN SEISMIC SAFETY PROJECT

OAKLAND APPROACH STRUCTURES-PHASE 1

BIKEPATH RAILING DETAILS NO.3

DESIGN OVERSIGHT: SAM AKKAD, FRANCISCO CARPIO, BERNARD CHAN, HASAN EL-MATUR
8-10-06
SIGN OFF DATE
3/6/09

	BY	CHECKED
DESIGN	Shangkuan	Atiqullah
DETAILS	van Ryn/Zucchi/Mai	Jain
QUANTITIES	Liao	E. Nichol

PREPARED FOR THE STATE OF CALIFORNIA DEPARTMENT OF TRANSPORTATION

Jal Birdy
PROJECT ENGINEER

BRIDGE NO. 34-0006 L/R
KILOMETER POST 1.6

CU 04
EA 0120L1

DISREGARD PRINTS BEARING EARLIER REVISION DATES
REVISION DATES (PRELIMINARY STAGE ONLY): 11/22/06 3/5/09 10/20/03 10/29/04 2/24/05 5/24/05 11/14/06 1/17/06 1/17/06 1/29/06

SHEET 183 OF 224

ORIGINAL SCALE IN MILLIMETERS FOR REDUCED PLANS 0 10 20 30 40 50 60 70 80 90 100

Rev. Date: 5-18-98

FILE => j:\civil\4141\100%\ook\CCO 030609\04-0120l1-34-006-u-ssbikerail3.dgn

USERNAME => fsamson DATE PLOTTED => 3/5/2009 TIME PLOTTED => 4:09:08 PM

DIST	COUNTY	ROUTE	KILOMETER POST TOTAL PROJECT	SHEET NO.	TOTAL SHEETS
04	Ala	80	1.6/2.7	428R1	643

REGISTERED ENGINEER-CIVIL

1-29-07

PLANS APPROVAL DATE

REGISTERED PROFESSIONAL ENGINEER T. W. SPARKS No. E16039 Exp. 9-30-07 ELECTRICAL STATE OF CALIFORNIA

The State of California or its officers or agents shall not be responsible for the accuracy or completeness of electronic copies of this plan sheet.

T.Y. LIN / MOFFATT & NICHOL
TWO HARRISON STREET, SUITE 500
SAN FRANCISCO, CA 94105

To get to the Caltrans web site, go to: http://www.dot.ca.gov

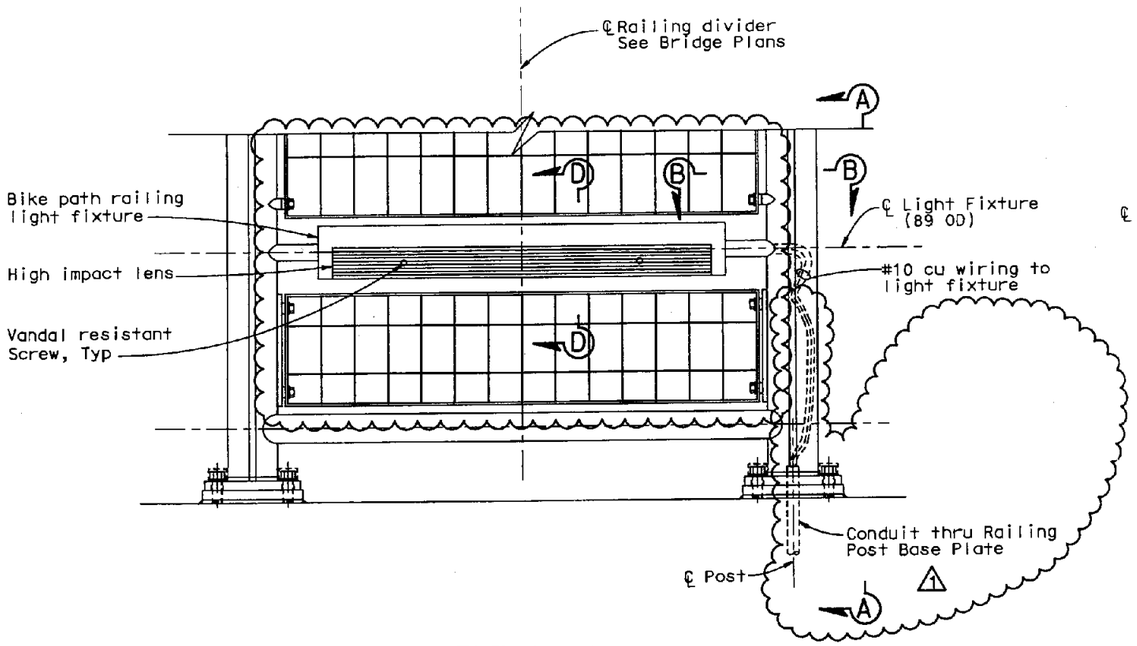

ELEVATION
1:5

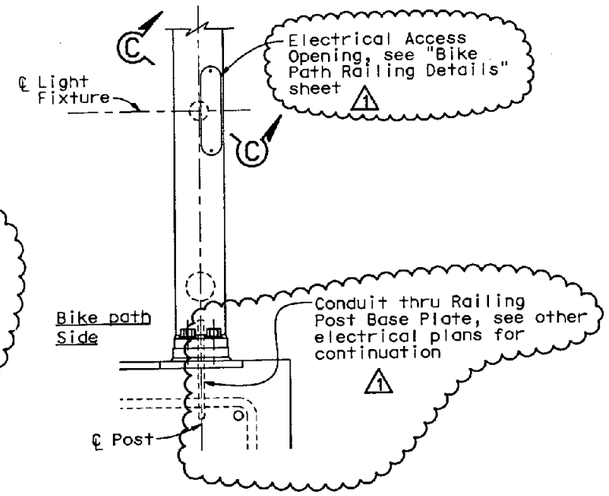

SECTION A-A
1:5

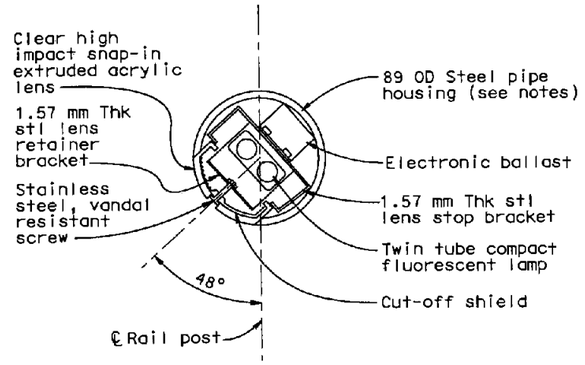

SECTION D-D
1:2

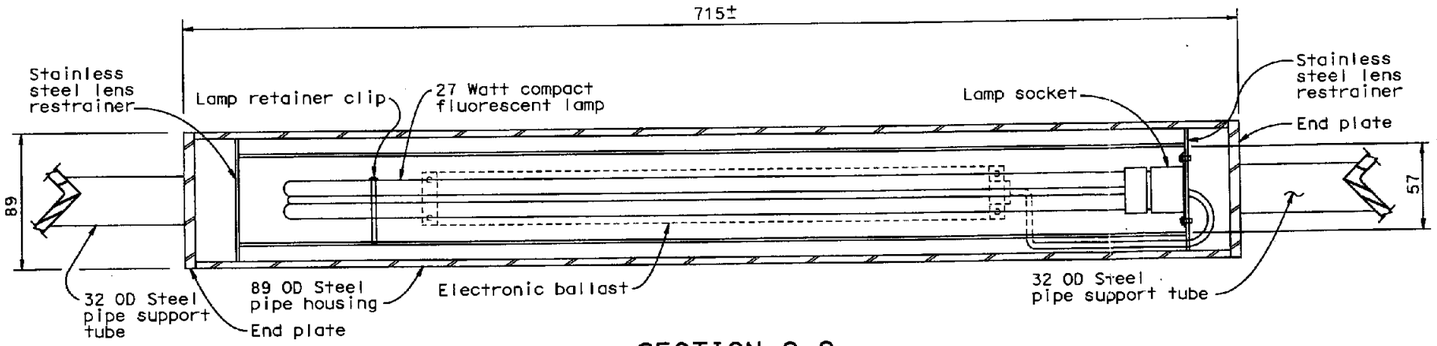

SECTION C-C
1:2

NOTES:

1. All metal (Except stainless steel) parts of railing light assembly shall be coated.
2. Refer to structural plans for railing details.
3. Light fixtures shall be parallel to top of bike path.
4. Light fixture support tube shall be welded to vertical posts.
5. All exposed welds shall be ground smooth.

MARK	DATE	DESCRIPTIONS	BY	CH'D
1	3/9/09	Electrical conduit entrance into	ALE	JNB
		post and Railing Divider Grill		
		revised		

REVISIONS

REGISTERED PROFESSIONAL ENGINEER A.L. ELY No. 18880 Exp. 6-30-09 CIVIL STATE OF CALIFORNIA

STAMP IS VALID FOR REV 1 ONLY

CONTRACT CHANGE ORDER NO. 100
SHEET 6 OF 6 3/11/09

DETAILS
ROADWAY AND GIRDER LEVEL EASTBOUND TYPICAL BIKE PATH LIGHTING INSTALLATION
SCALE AS NOTED

ALL DIMENSIONS ARE IN MILLIMETERS UNLESS OTHERWISE SHOWN.

E-57

STATE OF CALIFORNIA - DEPARTMENT OF TRANSPORTATION

CONTRACT CHANGE ORDER MEMORANDUM

DATE: 3/13/2009 Page 1 of 1

TO: AMER BATA / BEN GHAFGHAZI	FILE: E.A. 04 - 0120L4
FROM: BEN GHAFGHAZI	CO-RTE-PM ALA-80-1.6/2.7
	FED. NO. NO FED AID
CCO#: 100 SUPPLEMENT#: 0 Category Code: CHPA	CONTINGENCY BALANCE (incl. this change) $6,503,230.20
COST: $20,000.00 INCREASE ☑ DECREASE ☐	HEADQUARTERS APPROVAL REQUIRED? ☐ YES ☑ NO
SUPPLEMENTAL FUNDS PROVIDED: $0.00	IS THIS REQUEST IN ACCORDANCE WITH ENVIRONMENTAL DOCUMENTS? ☑ YES ☐ NO
CCO DESCRIPTION: Bike Path Railing	**PROJECT DESCRIPTION:** Construct bridge, roadway, building and electrical system.

Original Contract Time:	Time Adj. This Change:	Previously Approved CCO Time Adjustments:	Percentage Time Adjusted: (including this change)	Total # of Unreconciled Deferred Time CCO(s): (including this change)
810 Day(s)	0 Day(s)	184 Day(s)	23 %	8

THIS CHANGE ORDER PROVIDES FOR:
Modification to bikepath railing per sheets 2 of 6 through 6 of 6 of the CCO.

This change is necessary to conform with the existing Skyway bikepath and incorporate new details for access gates and electrical wiring that will be the standard for throughout the SFOBB. The emergency gate details are being revised to improve performance of the gate based on the past experience on the Skyway. The bikepath railing grilles will be changed to match the grilles that were installed on the Skyway. The electrical wiring will be revised to run the wires within the bikepath railing posts to eliminate external conduits and improve aesthetics of the bridge. These details will be incorporated into all ongoing SFOBB contracts.

This work will be paid as Extra Work at Force Account for $20,000.00, which can be financed from the contingency fund.

This change has been discussed and concurred with Hasan El Natur of Structures Design (3/6/09); Jal Birdy, structure designer for Moffat Nichol (3/6/09); Parviz Boozarpour of Electrical Design (6/8/09); Lina Ellis of Structures Maintenance (3/16/09); Rene Forteleza of Electrical Maintenance (6/8/09); and Clive Endress of Landscape Architecture (3/6/09).

No adjustment of contract time is warranted since this change does not affect the controlling operation.

CONCURRED BY:			
Construction Engineer:	Ben Ghafghazi	Date	6/8/09
Bridge Engineer:	Mehran Ardakanian	Date	6/8/09
Project Engineer:	Hasan El-Natur, Structures Design	Date	3/6/09
Project Manager:		Date	
FHWA Rep.:		Date	
Environmental:		Date	
Other (specify):	Clive Endress, Lanscape Architect	Date	3/6/09
Other (specify):	Parviz Boozarpour, Elec. Design	Date	6/8/09
District Prior Approval By:		Date	
HQ (Issue Approve) By:		Date	
Resident Engineer's Signature:		Date	6/8/09

ESTIMATE OF COST

	THIS REQUEST	TOTAL TO DATE
ITEMS	$0.00	$0.00
FORCE ACCOUNT	$20,000.00	$20,000.00
AGREED PRICE	$0.00	$0.00
ADJUSTMENT	$0.00	$0.00
TOTAL	$20,000.00	$20,000.00

FEDERAL PARTICIPATION

☐ PARTICIPATING ☐ PARTICIPATING IN PART ☑ NONE
☐ NON-PARTICIPATING (MAINTENANCE) ☐ NON-PARTICIPATING

FEDERAL SEGREGATION (if more than one Funding Source or P.I.P. type)
☑ CCO FUNDED PER CONTRACT ☐ CCO FUNDED AS FOLLOWS

FEDERAL FUNDING SOURCE	PERCENT

ADA Notice: For individuals with sensory disabilities, this document is available in alternate formats. For information call: (916) 654-6410 or TDD (916) 654-3880 or write Records and Forms Management, 1120 N Street, MS-89, Sacramento, CA 95814.

CONTRACT CHANGE ORDER

Change Requested by: Engineer

CCO 101	Suppl. No. 0	Contract No. 04 - 0120L4	Road ALA-80-1.6/2.7	FED. AID LOC.: NO FED AID

To: **M C M CONSTRUCTION INC**

You are directed to make the following changes from the plans and specifications or do the following described work not included in the plans and specifications for this contract. ***NOTE: This change order is not effective until approved by the Engineer.***

Description of work to be done, estimate of quantities and prices to be paid. (Segregate between additional work at contract price, agreed price and force account.) Unless otherwise stated, rates for rental of equipment cover only such time as equipment is actually used and no allowance will be made for idle time. This last percentage shown is the net accumulated increase or decrease from the original quantity in the Engineer's Estimate.

Extra Work at Force Account:

Replace the embedded electrical conduits with embedded sleeves and blockout openings and revise access openings in Frame 1 of Bridge No. 34-0006R. Modify reinforcing steel around the sleeves and build formwork to accommodate the added blockouts. All work shall be in accordance with Section 10-1.67, "Reinforcement," of the Special Provisions. Relocate the East Bound (EB) sewer line in the Oakland Touch Down (OTD) Superstructure to align with the existing sewer line from the EB Skyway Superstructure. All work is as shown on sheets 2 of 16 through 16 of 16 of this CCO.

Estimated cost of Extra Work at Force Account $100,000.00

Estimated Cost: **Increase** ☑ **Decrease** ☐ **$100,000.00**

By reason of this order the time of completion will be adjusted as follows: Deferred

Submitted by		
Signature	Resident Engineer BEN GHAFGHAZI	Date 6/2/09
Approval Recommended by		
Signature	Construction Manager Amer Bata	Date 6/2/09
Engineer Approval by		
Signature	Construction Manager Amer Bata	Date 11/19/09

We the undersigned contractor, have given careful consideration to the change proposed and agree, if this proposal is approved, that we will provide all equipment, furnish the materials, except as may otherwise be noted above, and perform all services necessary for the work above specified, and will accept as full payment therefor the prices shown above.

NOTE: If you, the contractor, do not sign acceptance of this order, your attention is directed to the requirements of the specifications as to proceeding with the ordered work and filing a written protest within the time therein specified.

Contractor Acceptance by		
Signature	(Print name and title) EDMUNDO A. RUCHI, TREASURER	Date 10/27/09

DIST.	COUNTY	ROUTE	KILOMETER POST TOTAL PROJECT	SHEET NO.	TOTAL SHEETS
04	Ala	80	1.6/2.7	121R2	643

REGISTERED ENGINEER - CIVIL

1-29-07
PLANS APPROVAL DATE

REGISTERED PROFESSIONAL ENGINEER MOHAN S. CHAR No. C057894 Exp. 6/30/08 CIVIL STATE OF CALIFORNIA

The State of California or its officers or agents shall not be responsible for the accuracy or completeness of electronic copies of this plan sheet.

T.Y. LIN / MOFFATT & NICHOL
TWO HARRISON STREET, SUITE 500
SAN FRANCISCO, CA 94105

LIM & NASCIMENTO ENGINEERING CORPORATION
12 MAUCHLY, BLDG L
IRVINE, CA 92618

To get to the Caltrans web site, go to: http://www.dot.ca.gov

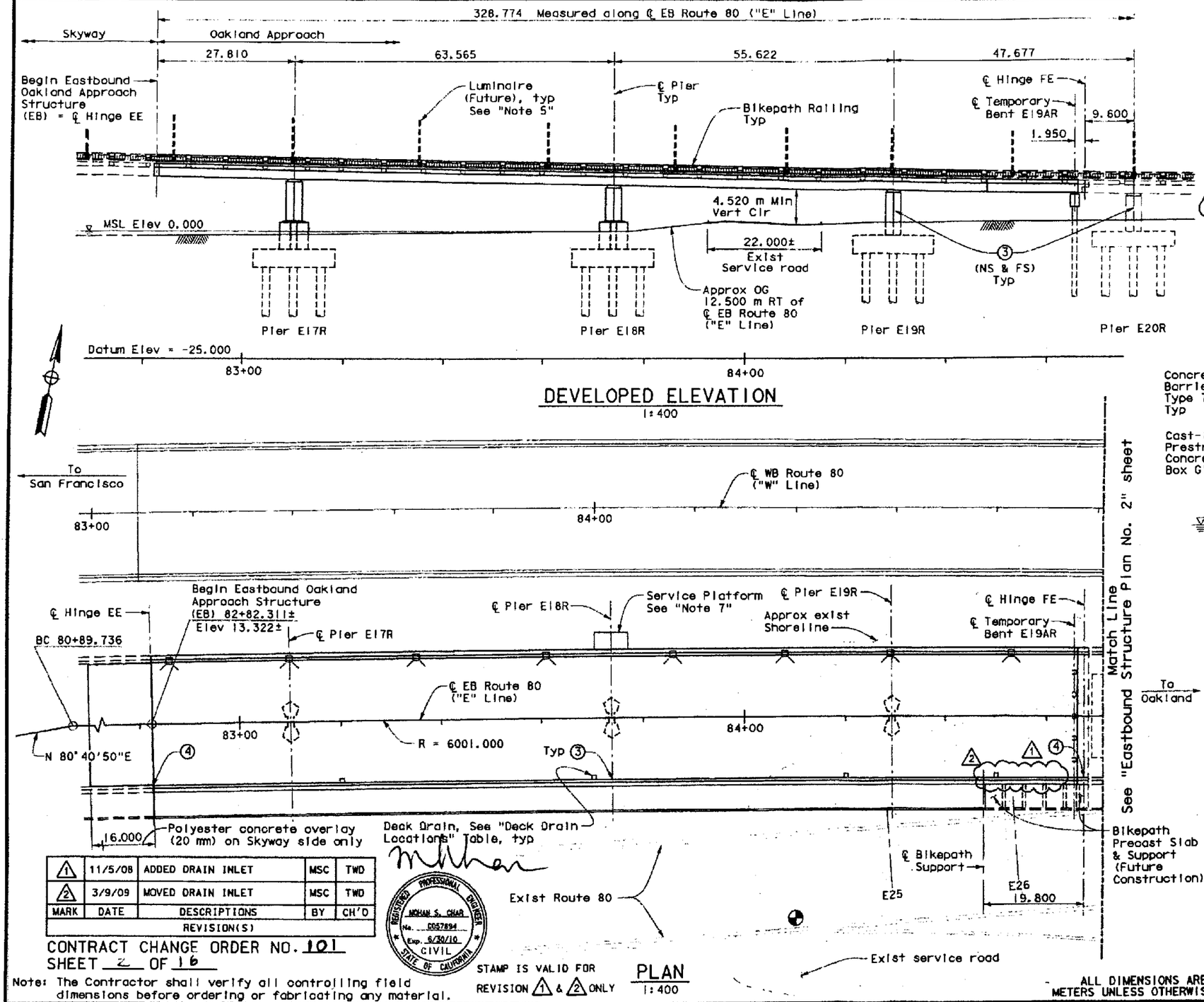

DEVELOPED ELEVATION
1:400

DECK DRAIN LOCATIONS*	
Station	Side
83+20.000	Rt
83+70.000	Rt
84+20.000	Rt
84+50.000	Rt

* See "Note 8"

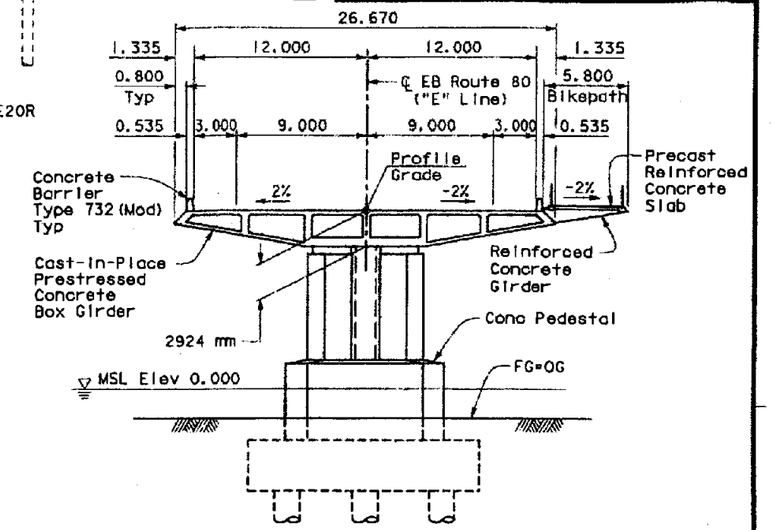

TYPICAL SECTION
1:200

Notes:
1. Pier E17R shown. Piers E18R and E19R similar except where shown otherwise.
2. For Westbound Structure, see "Westbound Structure Plan No. 1 and No. 2" sheets.
3. For Deck Drain Details see "Miscellaneous Details No. 2" sheet.
4. For Luminaire Supports see "Miscellaneous Details No. 1" sheet.
5. For Luminaire and Locations, see "Roadway Plans".
6. Utilities not shown. See "Eastbound Typical Section 1 & 2" sheets.
7. For Service Platform, see "Service Platforms, Utility Vault and Precast Wall General Plan 1" sheet.
8. For Schematic Deck Drain Layout, see "Miscellaneous Details No. 4" sheet.

LEGEND
- → Indicates Direction of Travel
- Indicates luminaire
- Indicates deck drain, Type D-1 (Mod)
- Point of minimum vertical clearance at exist Route 80
- (3) Point Pier Number (NS & FS)
- (4) Point hinge name "Hinge EE" or "Hinge FE" as applicable

MARK	DATE	DESCRIPTIONS	BY	CH'D
1	11/5/08	ADDED DRAIN INLET	MSC	TWD
2	3/9/09	MOVED DRAIN INLET	MSC	TWD

REVISION(S)

CONTRACT CHANGE ORDER NO. 101
SHEET 2 OF 16

REGISTERED PROFESSIONAL ENGINEER MOHAN S. CHAR No. C057894 Exp. 6/30/10 CIVIL STATE OF CALIFORNIA

STAMP IS VALID FOR REVISION 1 & 2 ONLY

PLAN
1:400

Note: The Contractor shall verify all controlling field dimensions before ordering or fabricating any material.

- ALL DIMENSIONS ARE IN METERS UNLESS OTHERWISE SHOWN

SAN FRANCISCO OAKLAND BAY BRIDGE
EAST SPAN SEISMIC SAFETY PROJECT

OAKLAND APPROACH STRUCTURES - PHASE 1

EASTBOUND STRUCTURE PLAN NO. 1

DESIGN OVERSIGHT: SAM AKEAD, FRANCISCO CARPIO, BERNARD CHAN, HASAN EL-MATUR
SIGN OFF DATE: 3/11/09

	BY	CHECKED
DESIGN	M. CHAR	T. DUDLEY
DETAILS	N. MORCILLO/M. ANDRASEK	M. CHAR
QUANTITIES	N. MORCILLO/Y. KIM	V. SIVAKOLUNOU/T. DUDLEY

PREPARED FOR THE STATE OF CALIFORNIA DEPARTMENT OF TRANSPORTATION

MOHAN S. CHAR
PROJECT ENGINEER

BRIDGE NO. 34-0006L/R
KILOMETER POST 1.6

CU 04
EA 0120L1

DISREGARD PRINTS BEARING EARLIER REVISION DATES

REVISION DATES (PRELIMINARY STAGE ONLY): 11/6/06 12/20/06 1/29/07 2/26/07 4/27/07 11/5/08 1/29/09 3/11/09

SHEET 8 OF 224

ORIGINAL SCALE IN MILLIMETERS FOR REDUCED PLANS 0 10 20 30 40 50 60 70 80 90 100

FILE => U:\bridge\TYL10502\2009 CCOs\Drain Inlet CCO\04-0120L1-34-006-c-sp-east1_b.dgn

USERNAME => LAN DATE PLOTTED => 3/11/2009 TIME PLOTTED => 9:43:11 AM

DIST.	COUNTY	ROUTE	KILOMETER POST TOTAL PROJECT	SHEET NO.	TOTAL SHEETS
04	Ala	80	1.6/2.7	189R1	643

REGISTERED ENGINEER - CIVIL

1-29-07

PLANS APPROVAL DATE

The State of California or its officers or agents shall not be responsible for the accuracy or completeness of electronic copies of this plan sheet.

REGISTERED PROFESSIONAL ENGINEER MOHAN S. CHAR No. C057894 Exp. 6/30/08 CIVIL STATE OF CALIFORNIA

T.Y. LIN / MOFFATT & NICHOL
TWO HARRISON STREET, SUITE 500
SAN FRANCISCO, CA 94105

LIM & NASCIMENTO ENGINEERING CORPORATION
12 MAUCHLY, BLDG L
IRVINE, CA 92618

To get to the Caltrans web site go to http://www.dot.ca.gov

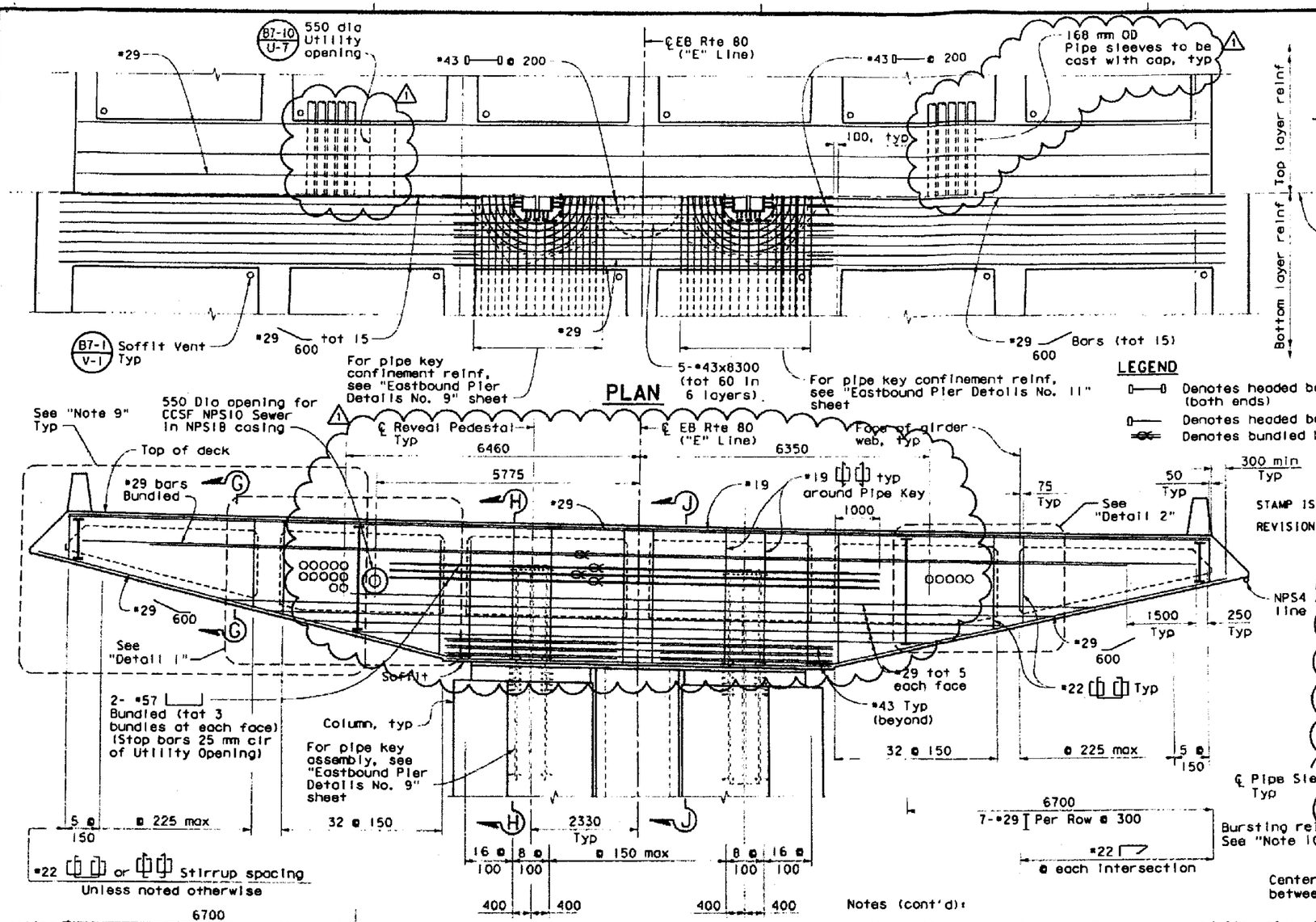

PLAN

ELEVATION

PIER CAP BEAM - PIER E17R

1:50

LEGEND

- Denotes headed bar (both ends)
- Denotes headed bar
- Denotes bundled bars

STAMP IS VALID FOR REVISION 1 ONLY

REGISTERED PROFESSIONAL ENGINEER MOHAN S. CHAR No. C057894 Exp. 6/30/10 CIVIL STATE OF CALIFORNIA

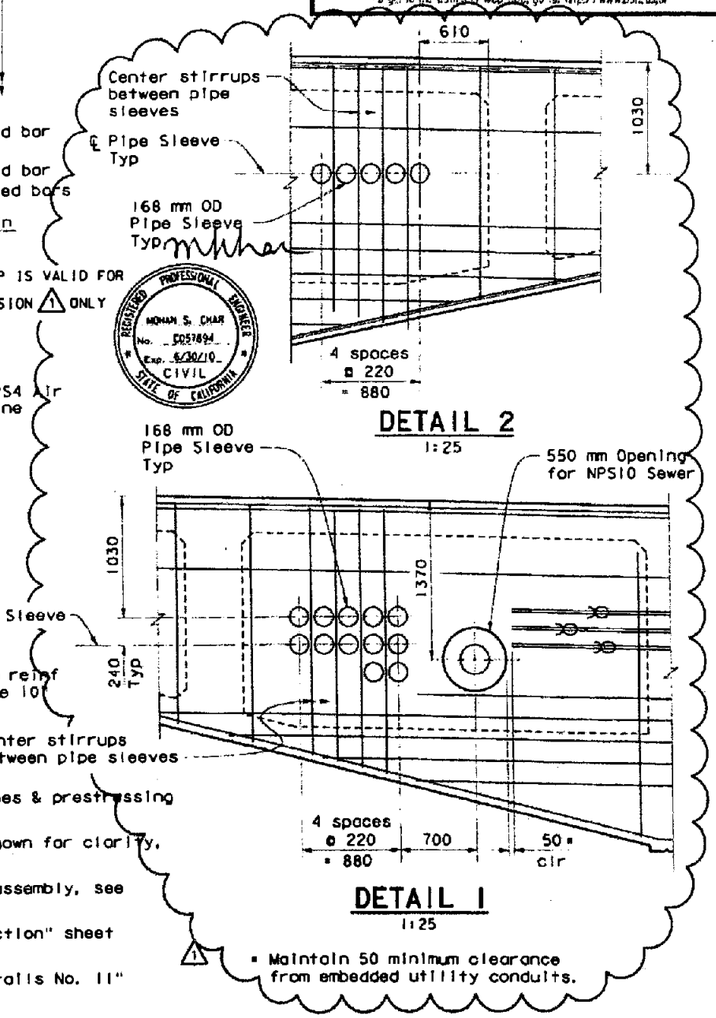

DETAIL 2

1:25

DETAIL 1

1:25

* Maintain 50 minimum clearance from embedded utility conduits.

Notes:

1. Spacings & dimensions are measured along ℄ Pier.
2. For information not shown, see "Pier Elevations" sheets.
3. For Sections "G-G", "H-H" & "J-J" see "Eastbound Pier Details No. 5" sheet.
4. For Prestressing Path Layout, see "Eastbound Pier Details No. 8" sheet.

Notes (cont'd):

5. Move stirrups to clear reinforcement, conduits, pipes & prestressing ducts at each girder and around pipe key area.
6. Other reinforcement around pipe key assembly not shown for clarity, see "Eastbound Pier Details No. 9" sheet.
7. For pipe key confinement reinforcement & pipe key assembly, see "Eastbound Pier Details No. 9" sheet.
8. For utility information, see "Eastbound Typical Section" sheet and "Electrical Plans" or "Mechanical Plans".
9. For "Cap Beam End Details", see "Eastbound Pier Details No. 11" sheet, typical except Cap Beam Prestressing Ducts.
10. For bursting reinforcement layout, see "Eastbound Pier Details No. 11" sheet.

ALL DIMENSIONS ARE IN MILLIMETERS UNLESS OTHERWISE SHOWN

MARK	DATE	DESCRIPTION	BY	CH'D
1	3/9/09	ADJUST UTILITY LOCATIONS	MSC	TWD
REVISION(S)				

CONTRACT CHANGE ORDER NO. 101
SHEET 3 OF 16

DESIGN OVERSIGHT: SAM AKRAD, FRANCISCO CAMPIO, BERNARD CHAN, HASAN EC-NATUR
SIGN OFF DATE 3/11/09

DESIGN	BY M. CHAR	CHECKED T. DUDLEY
DETAILS	BY N. MORCILLO/M. ANDRASEK	CHECKED M. CHAR
QUANTITIES	BY N. MORCILLO/Y. KIM	CHECKED V. SIVAKOLUNDU/T. DUDLEY

PREPARED FOR THE STATE OF CALIFORNIA DEPARTMENT OF TRANSPORTATION

MOHAN S. CHAR
PROJECT ENGINEER

BRIDGE NO. 34-0006L/R
KILOMETER POST 1.6

CU 04
EA 0120L1

SAN FRANCISCO OAKLAND BAY BRIDGE
EAST SPAN SEISMIC SAFETY PROJECT

OAKLAND APPROACH STRUCTURES - PHASE I

EASTBOUND PIER DETAILS NO. 4

DISREGARD PRINTS BEARING EARLIER REVISION DATES

SHEET 76 OF 224

ORIGINAL SCALE IN MILLIMETERS FOR REDUCED PLANS 0 10 20 30 40 50 60 70 80 90 100

Rev. Date: 5-18-98

DIST.	COUNTY	ROUTE	KILOMETER POST TOTAL PROJECT	SHEET NO.	TOTAL SHEETS
04	Ala	80	1.6/2.7	191R1	643

Caltrans Metric

REGISTERED ENGINEER - CIVIL

1-29-07
PLANS APPROVAL DATE

REGISTERED PROFESSIONAL ENGINEER MOHAN S. CHAR No. C057894 Exp 6/30/08 CIVIL STATE OF CALIFORNIA

The State of California or its officers or agents shall not be responsible for the accuracy or completeness of electronic copies of this plan sheet.

T.Y. LIN / MOFFATT & NICHOL
TWO HARRISON STREET, SUITE 500
SAN FRANCISCO, CA 94105

LIM & NASCIMENTO ENGINEERING CORPORATION
12 MAUCHLY, BLDG L
IRVINE, CA 92618

To get to the California web site go to: http://www.dot.ca.gov

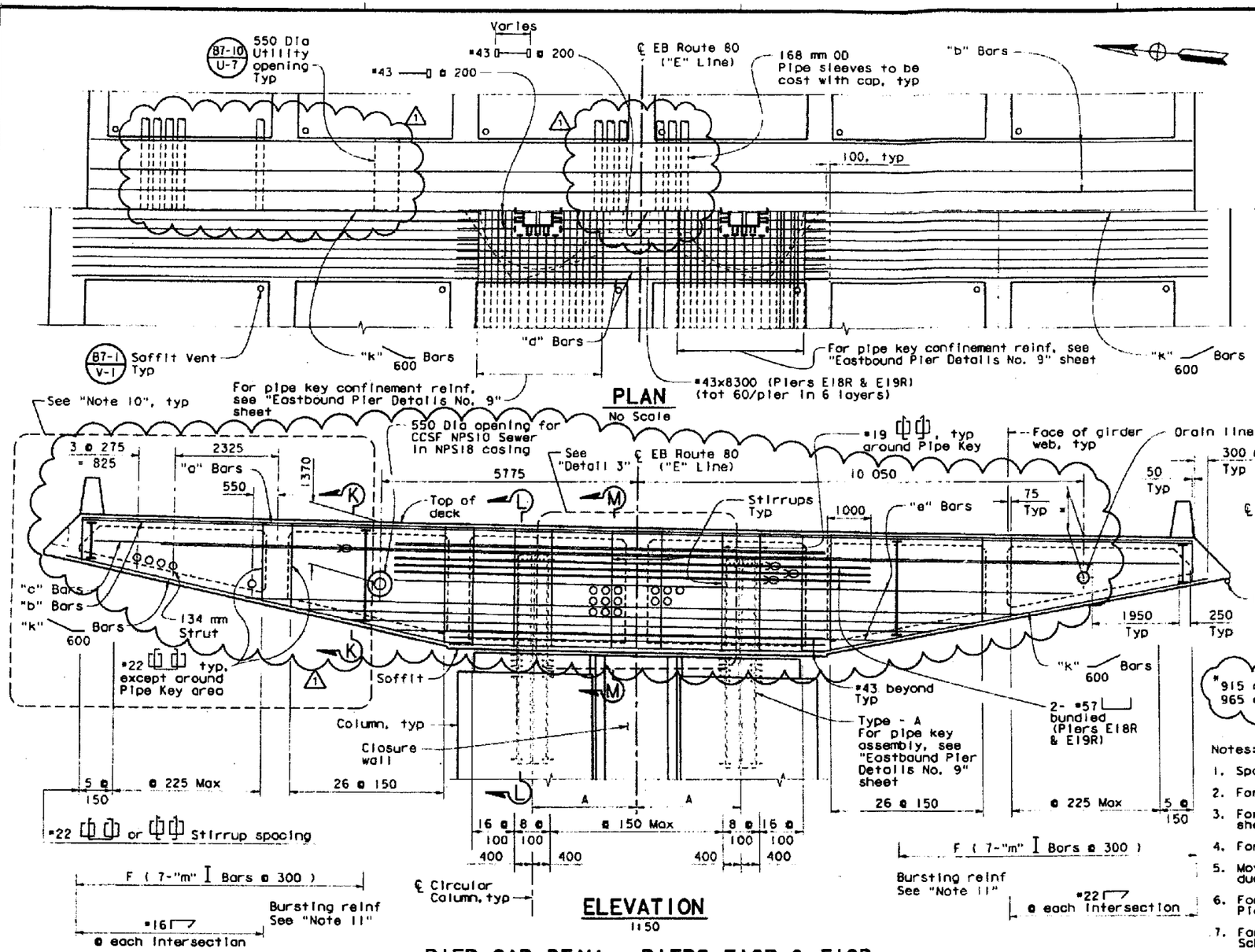

PIER CAP BEAM - PIERS E18R & E19R

Note: Pier E18R shown, Pier E19R similar

Notes:

1. Spacings & dimensions are measured along ℄ Pier.
2. For information not shown, see "Pier Elevations No. 1 thru 3" sheets.
3. For Sections "K-K", "L-L" & "M-M" see "Eastbound Pier Details No. 7" sheet.
4. For Prestressing Path Layout, see "Eastbound Pier Details No. 8" sheet.
5. Move stirrups to clear reinforcement, conduit, pipes & prestressing ducts at each girder and around pipe key area.
6. For additional reinforcement around pipe key assembly, see "Eastbound Pier Details No. 9" sheet.
7. For reinforcement designations and dimensions, see "Pier Cap Beam Schedule" on "Eastbound Pier Details No. 7" sheet.
8. For utility information, see "Eastbound Typical Section" sheet and "Electrical & Mechanical Plans".
9. Pipe sleeve layout shown for Pier E18R & E19R.
10. For "Cap Beam End Details", see "Eastbound Pier Details No. 11" sheet, Typical except Cap Beam Prestressing Ducts.
11. For bursting reinforcement layout, see "Eastbound Pier Details No. 11" sheet.

REGISTERED PROFESSIONAL ENGINEER MOHAN S. CHAR No. C057894 Exp. 6/30/10 CIVIL STATE OF CALIFORNIA

STAMP IS VALID FOR REVISION 1 ONLY

MARK	DATE	DESCRIPTION	BY	CH'D
1	3/9/09	ADJUST UTILITY LOCATIONS	MSC	TWD
REVISION(S)				

CONTRACT CHANGE ORDER NO. 101
SHEET 4 OF 16

DIMENSION TABLE	
Location	A
Pier E18R	2331
Pier E19R	2331

LEGEND

- Denotes headed bar (both ends)
- Denotes headed bar
- Denotes bundled bars

ALL DIMENSIONS ARE IN MILLIMETERS UNLESS OTHERWISE SHOWN

SAN FRANCISCO OAKLAND BAY BRIDGE
EAST SPAN SEISMIC SAFETY PROJECT

OAKLAND APPROACH STRUCTURES - PHASE I

EASTBOUND PIER DETAILS NO. 6

DESIGN OVERSIGHT: SAM AKKAD, FRANCISCO CARPIO, BERNARD CHAN, HASAN ELMATUN
SIGN OFF DATE 3/11/09

	BY	CHECKED
DESIGN	M. CHAR	T. DUDLEY
DETAILS	N. MORCILLO/M. ANDRASEK	M. CHAR
QUANTITIES	N. MORCILLO/Y. KIM	Y. SIVAKOLUNOU/T. DUDLEY

PREPARED FOR THE STATE OF CALIFORNIA DEPARTMENT OF TRANSPORTATION

MOHAN S. CHAR
PROJECT ENGINEER

BRIDGE NO. 34-0006L/R
KILOMETER POST 1.6

CU 04
EA 0120L1

DISREGARD PRINTS BEARING EARLIER REVISION DATES

SHEET 78 OF 224

Rev. Date 5-18-98

ORIGINAL SCALE IN MILLIMETERS FOR REDUCED PLANS 0 10 20 30 40 50 60 70 80 90 100

DIST.	COUNTY	ROUTE	KILOMETER POST TOTAL PROJECT	SHEET NO.	TOTAL SHEETS
04	Ala	80	1.6/2.7	204R1	643

REGISTERED ENGINEER - CIVIL

1-29-07
PLANS APPROVAL DATE

The State of California or its officers or agents shall not be responsible for the accuracy or completeness of electronic copies of this plan sheet.

REGISTERED PROFESSIONAL ENGINEER MOHAN S. CHAR No. C057894 Exp. 6/30/09 CIVIL STATE OF CALIFORNIA

T.Y. LIN / MOFFATT & NICHOL
TWO HARRISON STREET, SUITE 500
SAN FRANCISCO, CA 94105

LIM & NASCIMENTO ENGINEERING CORPORATION
12 MAUCHLY, BLDG L
IRVINE, CA 92618

To get to the Caltrans web site, go to: http://www.dot.ca.gov

Caltrans Metric

LEGEND

- · Denotes regular reinforcement
- ∘ Denotes additional longitudinal reinforcement, see "Eastbound Deck Details No. 1" sheet. For additional girder stem reinf, see "Eastbound Girder Details" sheet
- * 60 mm Min and 100 mm Max Clr to stirrup (except 25 mm Min clear near anchorage)
- ** Distribution bars
- X Denotes bar spacing

MARK	DATE	DESCRIPTIONS	BY	CH'D
1	3/9/09	REVISED UTILITY OPENING SCHEDULE, LOCATIONS & NOTE 5	MSC	TWD

REVISION(S)

CONTRACT CHANGE ORDER NO. 101
SHEET 5 OF 16

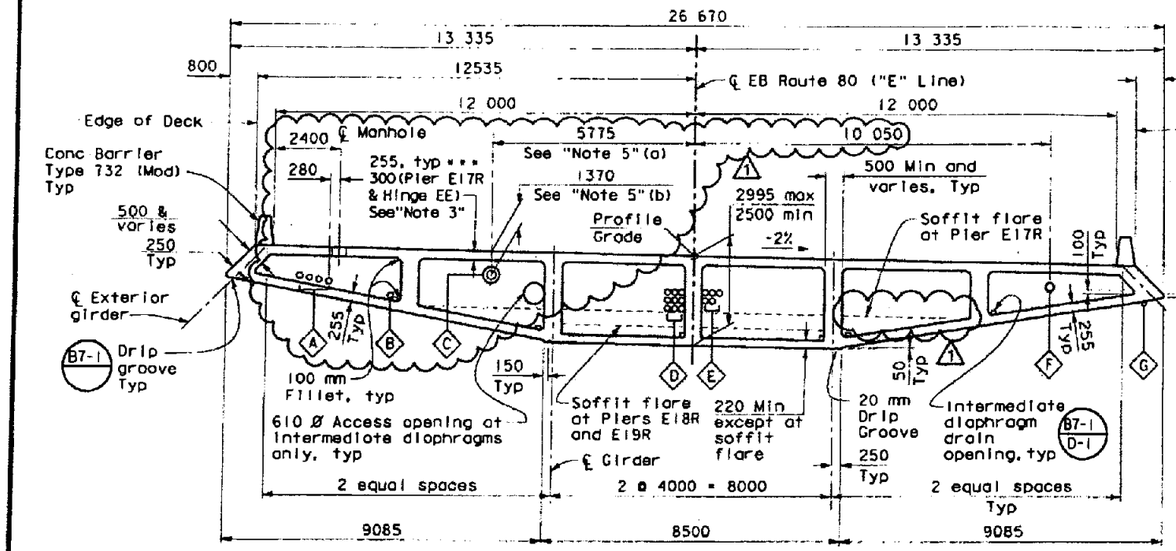

*** See "Eastbound Girder Layout No. 1" for transition of deck slab thickness

TYPICAL SECTION - HINGE EE TO HINGE FE

1:80

Note: Conduit Pattern Shown Near Pier E18R & E19R. For other locations, see "Eastbound Pier Details No. 4 & "Hinge EE Details No. 2 & 3" and "Eastbound Hinge FE Details No. 1" sheets.

UTILITY OPENING SCHEDULE

UTILITY DESCRIPTION	CONDUIT SIZE (mm)	CASING SIZE OD (mm)	PIER /DIAPHRAGM OPENING SIZE (mm)	HINGE OPENING SIZE (mm)
1 A Pipe sleeves for Electrical conduit #	5-103Ø (Hinge EE to Hinge FE & Pier E22R) 5- 103Ø & 3- 63Ø / 41Ø (Hinge FE to Pier E21R)	—	Cast-in-Place	Cast-in-Place
B Pipe sleeve for Electrical conduit #	1-103Ø	—	Cast-in-Place	Cast-in-Place
C CCSF Sewer line #	NPS 10 (Sewer) in NPS 18 Casing	460 Ø	Pier & Diaph 550 Ø except Diaph C & D	550 Ø
1 D Pipe sleeves for conduit #	12-103Ø (Hinge EE to Pier E17R) 9-103Ø (Pier E18R to Pier E21R)	—	Cast-in-Place	Cast-in-Place
E Pipe sleeves for Electrical Conduit (12Kv) #	5-103Ø	—	Cast-in-Place	Cast-in-Place
F Drain line	NPS 8 and NPS 10 ‡	—	250Ø and 300Ø ‡	None
G Air line	1-100Ø	—	None	None

‡ - See "Eastbound Girder Layout No. 1" sheet for size and locations.
# - For conduit layout & details not shown, see "Electrical Plans".

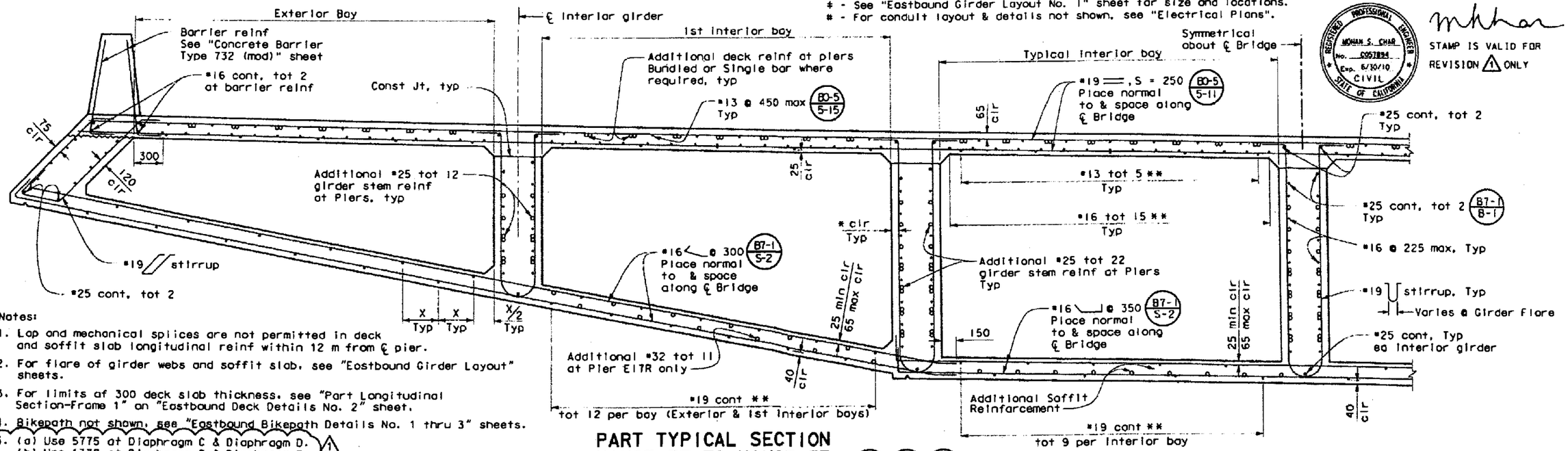

Notes:

1. Lap and mechanical splices are not permitted in deck and soffit slab longitudinal reinf within 12 m from ℄ pier.
2. For flare of girder webs and soffit slab, see "Eastbound Girder Layout" sheets.
3. For limits of 300 deck slab thickness, see "Part Longitudinal Section-Frame 1" on "Eastbound Deck Details No. 2" sheet.
4. Bikepath not shown, see "Eastbound Bikepath Details No. 1 thru 3" sheets.
5. (a) Use 5775 at Diaphragm C & Diaphragm D. (b) Use 1370 at Diaphragm C & Diaphragm D. 1
6. Anchorages and footholds at service platform not shown, see "SERVICE PLATFORMS - PLAN AND SECTIONS" sheet.

PART TYPICAL SECTION HINGE EE TO HINGE FE

1:20

B0-5 B7-1 B8-5

ALL DIMENSIONS ARE IN MILLIMETERS UNLESS OTHERWISE SHOWN

STAMP IS VALID FOR REVISION 1 ONLY

REGISTERED PROFESSIONAL ENGINEER MOHAN S. CHAR No. C057894 Exp. 6/30/10 CIVIL STATE OF CALIFORNIA

DESIGN OVERSIGHT: SAM AKRAD, FRANCISCO CARPIO, BERNARD CHAN, HASAN EZ-NATUR
SIGN OFF DATE 3/11/09

	BY	CHECKED
DESIGN	M. CHAR	T. DUDLEY
DETAILS	N. MORCILLO/M. ANDRASEK	M. CHAR
QUANTITIES	N. MORCILLO/Y. KIM	V. SIVAKOLUNDU/T. DUDLEY

PREPARED FOR THE STATE OF CALIFORNIA DEPARTMENT OF TRANSPORTATION

MOHAN S. CHAR
PROJECT ENGINEER

BRIDGE NO. 34-0006L/R
KILOMETER POST 1.6

SAN FRANCISCO OAKLAND BAY BRIDGE
EAST SPAN SEISMIC SAFETY PROJECT

OAKLAND APPROACH STRUCTURES - PHASE I

EASTBOUND TYPICAL SECTION

CU 04
EA 0120L1

DISREGARD PRINTS BEARING EARLIER REVISION DATES

SHEET 91 OF 224

Rev. Date: 5-18-98

ORIGINAL SCALE IN MILLIMETERS FOR REDUCED PLANS 0 10 20 30 40 50 60 70 80 90 100

FILE => U:\BRIDGE\TYL10502\2009 CCOs\Hinge Details CCO\04-012011 16 ODE K-typsec eest.dgn

DATE PLOTTED => 3/10/2009 TIME PLOTTED => 4:29:34 PM

SCREENAME => LAN

DIST.	COUNTY	ROUTE	KILOMETER POST TOTAL PROJECT	SHEET NO.	TOTAL SHEETS
04	Ala	80	1.6/2.7	211R2	643

Caltrans Metric

REGISTERED ENGINEER - CIVIL

1-29-07
PLANS APPROVAL DATE

The State of California or its officers or agents shall not be responsible for the accuracy or completeness of electronic copies of this plan sheet.

REGISTERED PROFESSIONAL ENGINEER MOHAN S. CHAR No. C057894 Exp. 6/30/08 CIVIL STATE OF CALIFORNIA

T.Y. LIN / MOFFATT & NICHOL
TWO HARRISON STREET, SUITE 500
SAN FRANCISCO, CA 94105

LIM & NASCIMENTO ENGINEERING CORPORATION
12 MAUCHLY, BLDG L
IRVINE, CA 92618

Notes:

1. For Deck prestressing details, see "Eastbound Deck Details No. 2" sheet.
2. For girders (A), (B), (K), & (L), see "Girder Layout Details No. 2" sheet.
3. Structure depth varies linearly from Hinge EE to Hinge FE.
4. Intermediate diaphragms to be placed radially. Dimensions shown are measured along ℄ EB Route 80.
5. For Utility Information, see table on "Eastbound Typical Section" sheet.
6. For Access Openings & Electrical Blockouts, see "Eastbound Girder Layout No. 1A" sheet. (2)
7. For Prestressing Notes, see "Eastbound Girder Layout No. 2" sheet.
8. For electrical conduit layout details and Loop Detector details, see "Electrical Plans".
9. For mechanical layout and pipe support details, see "Mechanical Plans".
10. For Utilities designation, see "Eastbound Typical Section" sheet.
11. See "Service Platform Details".
12. Girder opening locations are shown on "Eastbound Girder Layout No. 1A" sheet. (2)
13. Preformed Loop Detector will be cast with the deck and pullbox will be provided as stated on Preformed Loop Schedule as shown on "Roadway Plans".
14. For Additional Hair Pin reinforcement around ducts, see "Detail 2" on "Eastbound Hinge EE Details No. 5" sheet.

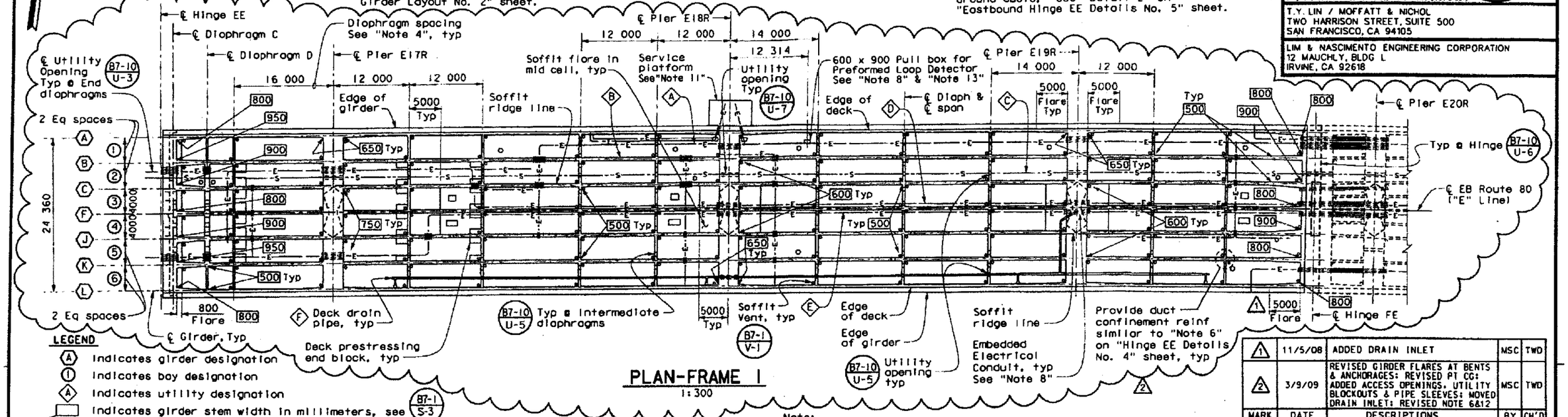

PLAN-FRAME 1

1:300

LEGEND

- (A) indicates girder designation
- (1) indicates bay designation
- (A) indicates utility designation
- indicates girder stem width in millimeters, see (B7-1 / S-3)
- 0.5 L1 indicates fraction of each girder length in the span noted
- indicates embedded PVC rigid metallic conduit or pipe sleeves

Note:
Bikeway details not shown, see "Eastbound Bikepath Details No. 2" sheet.

MARK	DATE	DESCRIPTIONS	BY	CH'D
1	11/5/08	ADDED DRAIN INLET	MSC	TWD
2	3/9/09	REVISED GIRDER FLARES AT BENTS & ANCHORAGES: REVISED PT CG: ADDED ACCESS OPENINGS. UTILITY BLOCKOUTS & PIPE SLEEVES: MOVED DRAIN INLET: REVISED NOTE 6&12	MSC	TWD

REVISION(S)

CONTRACT CHANGE ORDER NO. 1C1
SHEET 6 OF 16

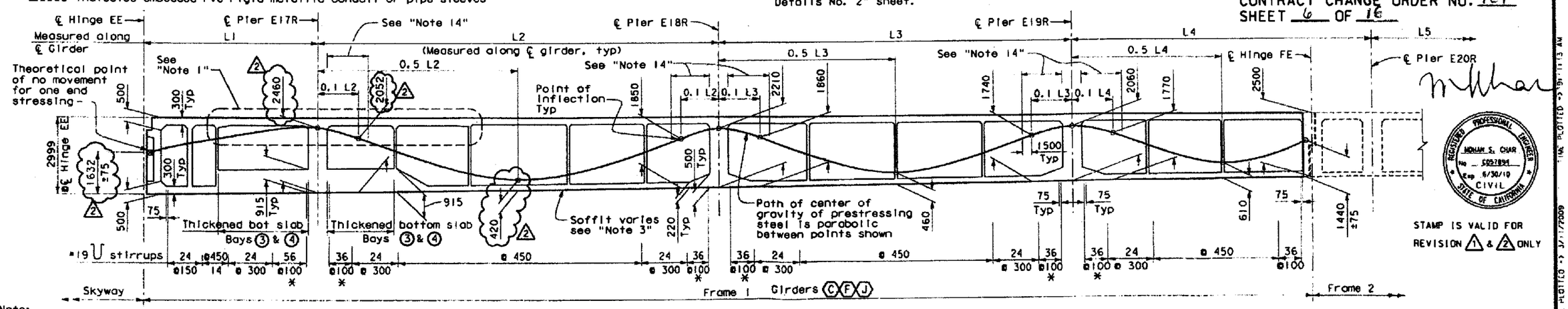

Note:
The Contractor shall verify all controlling field dimensions before ordering or fabricating any material.

* (2 Bundled)

LONGITUDINAL SECTION-FRAME 1

No Scale

ALL DIMENSIONS ARE IN MILLIMETERS UNLESS OTHERWISE SHOWN

STAMP IS VALID FOR REVISION (1) & (2) ONLY

SAN FRANCISCO OAKLAND BAY BRIDGE
EAST SPAN SEISMIC SAFETY PROJECT

OAKLAND APPROACH STRUCTURES - PHASE I

EASTBOUND GIRDER LAYOUT NO. 1

DESIGN OVERSIGHT: SAM AKKAD, FRANCISCO CARPIO, BERNARD CHAN, HASAN EL-MATUR
SIGN OFF DATE 3/11/09

	BY	CHECKED
DESIGN	M. CHAR	T. DUDLEY
DETAILS	N. MORCILLO/M. ANDRASEK	M. CHAR
QUANTITIES	N. MORCILLO/Y. KIM	V. SIVAKOLUNDU/T. DUDLEY

PREPARED FOR THE STATE OF CALIFORNIA DEPARTMENT OF TRANSPORTATION

MOHAN S. CHAR
PROJECT ENGINEER

CU 04
EA 0120L1

BRIDGE NO. 34-0006L/R
KILOMETER POST 1.6

DISREGARD PRINTS BEARING EARLIER REVISION DATES

SHEET 98 OF 224

Rev. Date: 5-18-88

ORIGINAL SCALE IN MILLIMETERS FOR REDUCED PLANS 0 10 20 30 40 50 60 70 80 90 100

FILE => U:\bridge\TYL10502\2009 CCOs\Deck access CCO\04-012011-34-006-1-xgir-lo-east-r2b.dgn

DATE PLOTTED => 3/11/2009 TIME PLOTTED => 15:11:13 AM

DIST.	COUNTY	ROUTE	KILOMETER POST TOTAL PROJECT	SHEET NO.	TOTAL SHEETS
04	Ala	80	1.6/2.7	211S1R1	643

Caltrans Metric

REGISTERED ENGINEER - CIVIL

3-9-09

PLANS APPROVAL DATE

REGISTERED PROFESSIONAL ENGINEER MOHAN S. CHAR No. C057894 Exp. 6/30/10 CIVIL STATE OF CALIFORNIA

The State of California or its officers or agents shall not be responsible for the accuracy or completeness of electronic copies of this plan sheet.

T.Y. LIN / MOFFATT & NICHOL
TWO HARRISON STREET, SUITE 500
SAN FRANCISCO, CA 94105

LIM & NASCIMENTO ENGINEERING CORPORATION
20 EMPIRE DRIVE
LAKE FOREST, CA 92630

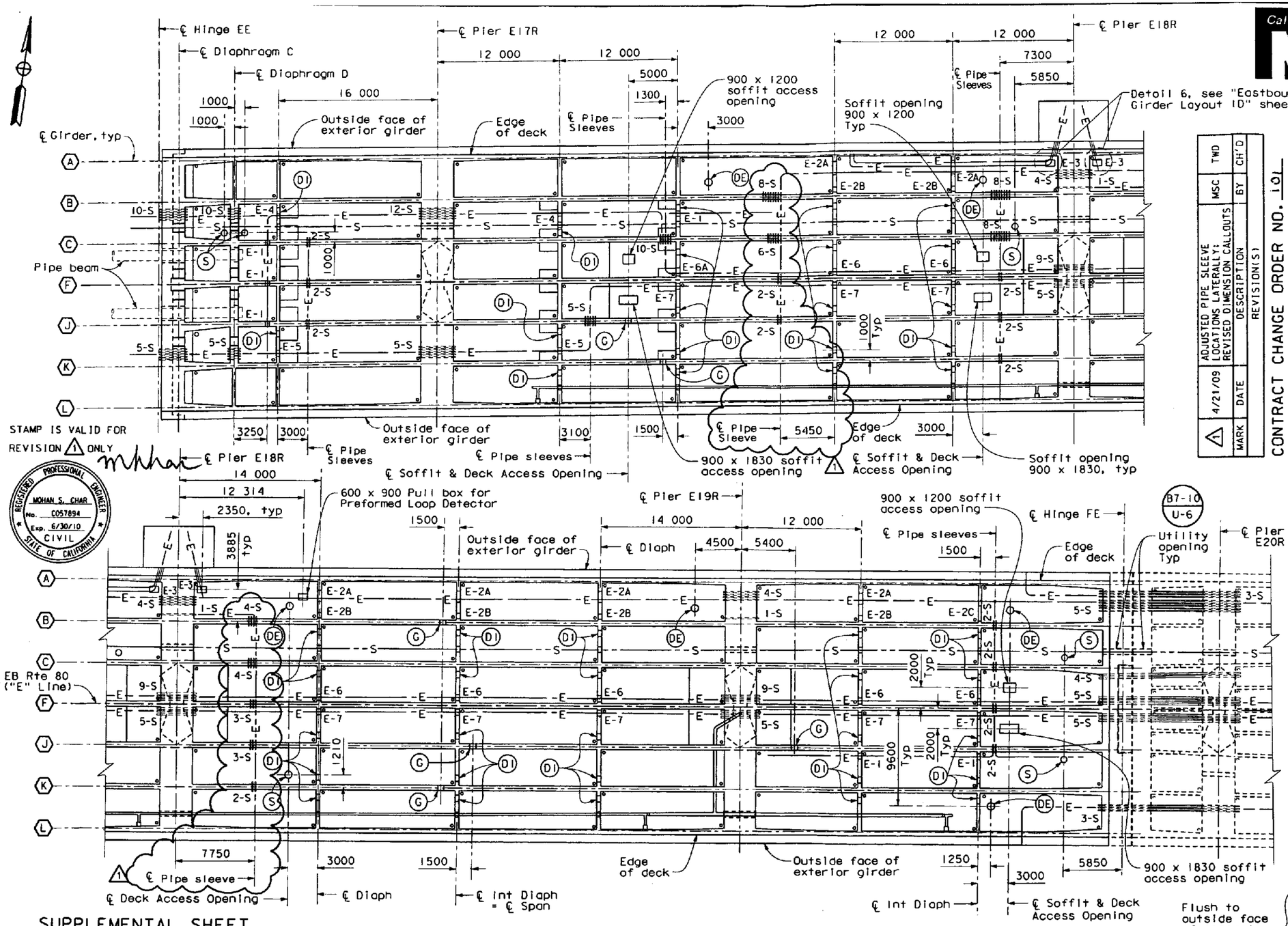

MARK	DATE	DESCRIPTION	BY	CH'D
1	4/21/09	ADJUSTED PIPE SLEEVE LOCATIONS LATERALLY; REVISED DIMENSION CALLOUTS	MSC	TWD

REVISION(S)

CONTRACT CHANGE ORDER NO. 101
SHEET 7 OF 17

LEGEND

- (A) Indicates girder designation
- (DI) Indicates 600 mm Ø diaphragm access opening (B7-10 / U-5)
- (G) Indicates 600 mm Ø girder access opening (B7-11 / U-41)
- (S) Indicates 610 mm Ø grated soffit access opening
- (DE) Indicates 600 mm Ø deck access opening (B7-11 / U-43)
- E-# Indicates Blockout opening type
- # -S # of Pipe sleeves Rigid PVC Sch 80

BLOCKOUT TYPE	BLOCKOUT SIZE	
E-1	500 × 200	
E-2A	1100 × 200	E-2B: 500 × 200
E-2C	1500 × 200	
E-3	900 × 500	Soffit Blockout
E-4	1200 × 800	
E-5	1200 × 200	
E-6	800 × 800	E-6A: 800 × 1100
E-7	800 × 500	
	168 mm OD Rigid PVC Sch 80*	

* Exception:
At Hinge FE, 171 mm OD embedded metallic pipe sleeves for 103 mm RGS conduit will be installed and 91 mm OD for 41 mm RGS conduit.

SUPPLEMENTAL SHEET
CONTRACT CHANGE ORDER NO. 101
SHEET 7 OF 16

ACCESS OPENINGS & ELECTRICAL BLOCKOUTS
PLAN - FRAME 1

1:200

Note: The Contractor shall verify all controlling field dimensions before ordering or fabricating any material.

ALL DIMENSIONS ARE IN MILLIMETERS UNLESS OTHERWISE SHOWN

SAN FRANCISCO OAKLAND BAY BRIDGE
EAST SPAN SEISMIC SAFETY PROJECT

OAKLAND APPROACH STRUCTURES - PHASE I

EASTBOUND GIRDER LAYOUT NO. 1A

ION OVERSIGHT
SAM AKKAD FRANCISCO CARPIO BERNARD CHAN YASIN EL NATUR
SIGN OFF DATE 4/29/09

	BY	CHECKED
DESIGN	M. CHAR	T. DUDLEY
DETAILS	M. ANDRASEK	M. CHAR
QUANTITIES	N. MORCILLO/Y. KIM	V. SIVAKOLUNDU/T. DUDLEY

PREPARED FOR THE STATE OF CALIFORNIA DEPARTMENT OF TRANSPORTATION

MOHAN S. CHAR
PROJECT ENGINEER

BRIDGE NO. 34-0006L/R
KILOMETER POST 1.6

CU 04
EA 0120L1

DISREGARD PRINTS BEARING EARLIER REVISION DATES 3/9/09

SHEET 98S1 OF 224

Rev. Date: 5-18-88

ORIGINAL SCALE IN MILLIMETERS FOR REDUCED PLANS 0 10 20 30 40 50 60 70 80 90 100

FILE => u:\BRIDGE\TYL10502\2009 CCOs\Deck access CCO\04-012011-34-006-1-xgir-lo-eastlasr1.dgn

USERNAME => LAN DATE PLOTTED => 4/23/2009 TIME PLOTTED => 2:30:54 PM

SUPPLEMENTAL SHEET
CONTRACT CHANGE ORDER NO. ____
SHEET ____ OF ____

STAMP IS VALID FOR REVISION 1 ONLY

MARK	DATE	DESCRIPTION	BY	CH'D
1	4/21/09	ADJUSTED PIPE SLEEVE LOCATIONS LATERALLY; MOVED DIMENSION CALLOUTS	MSC	TWD
REVISION(S)				

CONTRACT CHANGE ORDER NO. 101
SHEET 8 OF 16

Notes:

1. Locations of LOL of top and bottom prestressing ducts as shown are approximate. Contractor shall field verify.
2. Adjust vertical location of the pipe sleeves in the field to avoid conflict with prestressing ducts as approved by the Engineer.
3. For reinforcement around pipe sleeves, blockout and girder access openings, see "Eastbound Girder Layout No. 1D" supplemental sheet.

LEGEND

#-S	Indicates # of Pipe Sleeves or Rigid PVC Sch 80
E-1	Indicates 400 mm x 200 mm Blockout opening
G	Indicates 600 mm Ø girder access opening (B7-11 / U-41)

Caltrans Metric

DIST.	COUNTY	ROUTE	KILOMETER POST TOTAL PROJECT	SHEET NO.	TOTAL SHEETS
04	Ala	80	1.6/2.7	211S2R1	643

REGISTERED ENGINEER - CIVIL
3-9-09
PLANS APPROVAL DATE
The State of California or its officers or agents shall not be responsible for the accuracy or completeness of electronic copies of this plan sheet.

REGISTERED PROFESSIONAL ENGINEER MOHAN S. CHAR No. C057894 Exp. 6/30/10 CIVIL STATE OF CALIFORNIA

T.Y. LIN / MOFFATT & NICHOL
TWO HARRISON STREET, SUITE 500
SAN FRANCISCO, CA 94105

LIM & NASCIMENTO ENGINEERING CORPORATION
20 EMPIRE DRIVE
LAKE FOREST, CA 92630

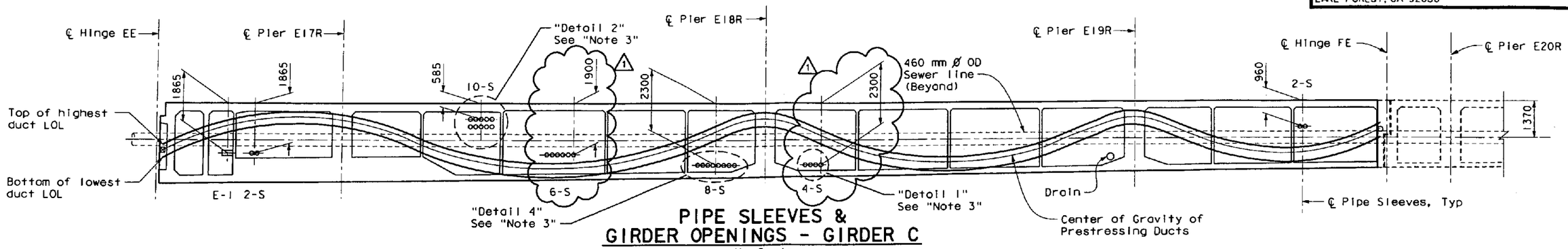

PIPE SLEEVES & GIRDER OPENINGS - GIRDER C
No Scale

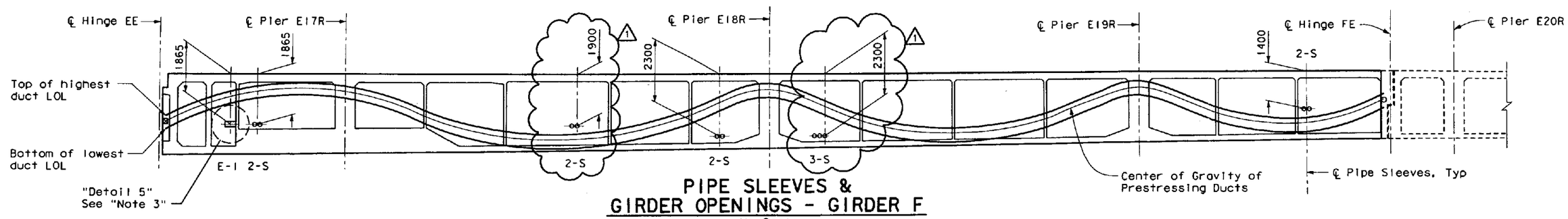

PIPE SLEEVES & GIRDER OPENINGS - GIRDER F
No Scale

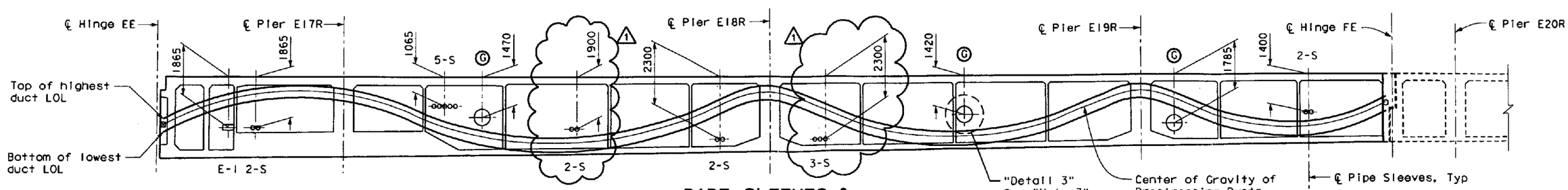

PIPE SLEEVES & GIRDER OPENINGS - GIRDER J
No Scale

Note: The Contractor shall verify all controlling field dimensions before ordering or fabricating any material.

ALL DIMENSIONS ARE IN MILLIMETERS UNLESS OTHERWISE SHOWN

SIGN OVERSIGHT: SAM AKKAD, FRANCISCO CARPIO, BERNARD CHAN, NASAN EL-NATUR
SIGN OFF DATE: 4/29/09

	BY	CHECKED
DESIGN	M. CHAR	T. DUDLEY
DETAILS	M. ANDRASEK	M. CHAR
QUANTITIES	N. MORCILLO/Y. KIM	V. SIVAKOLUNDU/T. DUDLEY

PREPARED FOR THE STATE OF CALIFORNIA DEPARTMENT OF TRANSPORTATION

MOHAN S. CHAR
PROJECT ENGINEER

BRIDGE NO. 34-0006L/R
KILOMETER POST 1.6

SAN FRANCISCO OAKLAND BAY BRIDGE
EAST SPAN SEISMIC SAFETY PROJECT
OAKLAND APPROACH STRUCTURES - PHASE I
EASTBOUND GIRDER LAYOUT NO. 1B

Rev. Date: 5-18-98
ORIGINAL SCALE IN MILLIMETERS FOR REDUCED PLANS 0 10 20 30 40 50 60 70 80 90 100
CU 04
EA 0120L1
DISREGARD PRINTS BEARING EARLIER REVISION DATES 3/9/09
REVISION DATES (PRELIMINARY STAGE ONLY)
SHEET 98S2 OF 224
FILE => U:\BRIDGE\TYL10502\2009 CCOs\Girder CCO\04-0120L1-34-006-1-xglr-lo-eastlos2r1.dgn
USERNAME => LAN
DATE PLOTTED => 4/23/2009
TIME PLOTTED => 12:03:57 PM

DIST.	COUNTY	ROUTE	KILOMETER POST TOTAL PROJECT	SHEET NO.	TOTAL SHEETS
04	Ala	80	1.6/2.7	211S3R1	643

Caltrans Metric

REGISTERED ENGINEER - CIVIL

3-9-09

PLANS APPROVAL DATE

REGISTERED PROFESSIONAL ENGINEER MOHAN S. CHAR No. C057894 Exp. 6/30/10 CIVIL STATE OF CALIFORNIA

The State of California or its officers or agents shall not be responsible for the accuracy or completeness of electronic copies of this plan sheet.

T.Y. LIN / MOFFATT & NICHOL
TWO HARRISON STREET, SUITE 500
SAN FRANCISCO, CA 94105

LIM & NASCIMENTO ENGINEERING CORPORATION
20 EMPIRE DRIVE
LAKE FOREST, CA 92630

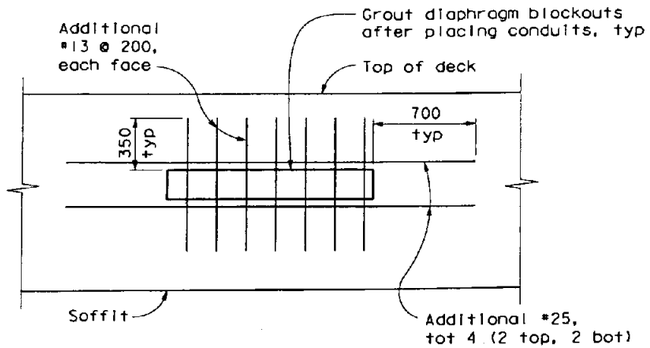

Note: For blockouts wider than 1000 mm only.

DIAPHRAGM ELECTRICAL BLOCKOUT DETAIL

No Scale

Notes:

1. Locations of LOL of top and bottom prestressing ducts as shown are approximate. Contractor shall field verify.
2. Adjust vertical location of the pipe sleeves in the field to avoid conflict with prestressing ducts as approved by the Engineer.
3. For reinforcement around pipe sleeves, blockout and girder access openings, see "Eastbound Girder Layout No. 1D" supplemental sheet.

LEGEND

#-S Indicates # of Pipe Sleeves or Rigid PVC Sch 80

(G) Indicates 600 mm Ø girder access opening (B7-11 / U-41)

REGISTERED PROFESSIONAL ENGINEER MOHAN S. CHAR No. C057894 Exp. 6/30/10 CIVIL STATE OF CALIFORNIA

STAMP IS VALID FOR REVISION 1 ONLY

MARK	DATE	DESCRIPTION	BY	CH'D
1	4/21/09	ADJUSTED PIPE SLEEVE LOCATIONS LATERALLY; MOVED DIMENSION CALLOUTS	MSC	TWD

REVISION(S)

CONTRACT CHANGE ORDER NO. 101
SHEET 9 OF 16

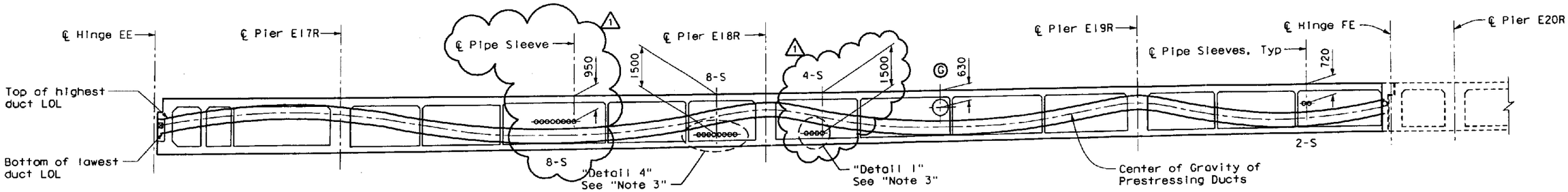

PIPE SLEEVES & GIRDER OPENINGS - GIRDER B

No Scale

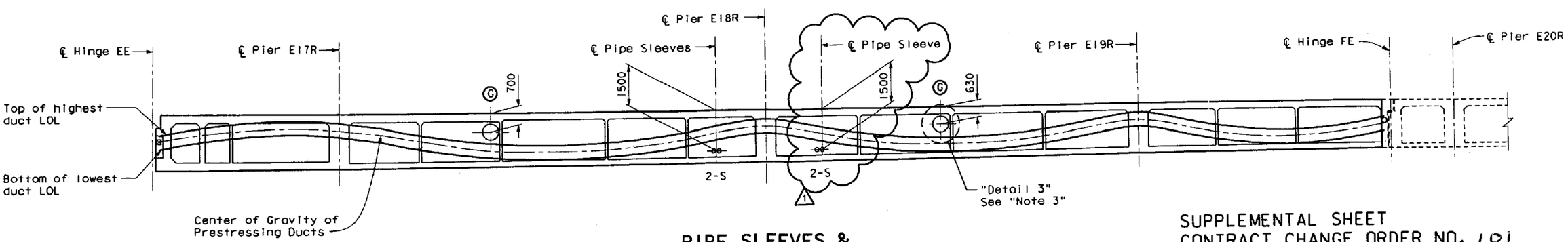

PIPE SLEEVES & GIRDER OPENINGS - GIRDER K

No Scale

SUPPLEMENTAL SHEET
CONTRACT CHANGE ORDER NO. 101
SHEET ___ OF ___

Note: The Contractor shall verify all controlling field dimensions before ordering or fabricating any material.

ALL DIMENSIONS ARE IN MILLIMETERS UNLESS OTHERWISE SHOWN

SIGN OVERSIGHT: SAM AKKAD, FRANCISCO CARPIO, BERNARD CHAN, HASAN EL-NATUR

SIGN OFF DATE: 4/29/09

Rev. Date: 5-15-88

	BY	CHECKED
DESIGN	M. CHAR	T. DUDLEY
DETAILS	M. ANDRASEK	M. CHAR
QUANTITIES	N. MORCILLO/Y. KIM	V. SIVAKOLUNDU/T. DUDLEY

ORIGINAL SCALE IN MILLIMETERS FOR REDUCED PLANS 0 10 20 30 40 50 60 70 80 90 100

PREPARED FOR THE STATE OF CALIFORNIA DEPARTMENT OF TRANSPORTATION

MOHAN S. CHAR, PROJECT ENGINEER

CU 04
EA 0120L1

BRIDGE NO. 34-0006L/R
KILOMETER POST 1.6

DISREGARD PRINTS BEARING EARLIER REVISION DATES 3/9/09

SAN FRANCISCO OAKLAND BAY BRIDGE
EAST SPAN SEISMIC SAFETY PROJECT

OAKLAND APPROACH STRUCTURES - PHASE I

EASTBOUND GIRDER LAYOUT NO. 1C

REVISION DATES (PRELIMINARY STAGE ONLY)

SHEET 98S3 OF 224

FILE => u:\BRIDGE\TYL10502\2009 CCOs\Girder CCO\04-0120l1-34-006-1-xgir-1o-eastlos3r1.dgn

USERNAME => LAN DATE PLOTTED => 4/23/2009 TIME PLOTTED => 12:05:33 PM

DIST	COUNTY	ROUTE	KILOMETER POST TOTAL PROJECT	SHEET NO.	TOTAL SHEETS
04	Ala	80	1.6/2.7	212R2	643

REGISTERED ENGINEER - CIVIL

1-29-07
PLANS APPROVAL DATE

The State of California or its officers or agents shall not be responsible for the accuracy or completeness of electronic copies of this plan sheet.

REGISTERED PROFESSIONAL ENGINEER MOHAN S. CHAR No. C057894 Exp. 6/30/08 CIVIL STATE OF CALIFORNIA

T.Y. LIN / MOFFATT & NICHOL
TWO HARRISON STREET, SUITE 500
SAN FRANCISCO, CA 94105

LIM & NASCIMENTO ENGINEERING CORPORATION
12 MAUCHLY, BLDG L
IRVINE, CA 92618

To get to the Caltrans web site, go to: http://www.dot.ca.gov

PRESTRESSING NOTES

1860 MPa Low Relaxation Strand
Pjack = See "Pjack Table"
K = 0.0007/m, μ = 0.20/rad (Girders)

Anchor Set = 10 mm
Total number of girders = 7

Concrete f'c @ 28 days = 45 MPa
Concrete f'ci @ time of stressing = 43 MPa *

Contractor shall submit elongation calculations based on initial stress at ⊠ = See "Pjack TABLE"

Distribution of final prestress force (Pjack) shall be based on the table shown. Maximum final girder and deck slab force variation from the designated force shall not exceed 3200 kN.

One end stressing shall be performed from Hinge FE for girders, and right end for deck slab.

* f'ci can be reduced to 38 MPa if rebar spiral in local anchor area provided is longer than the minimum length recommended by manufacturer. The Contractor shall submit calculations to the Engineer for approval before construction.

STAMP IS VALID FOR REVISION 1 & 2 ONLY

REGISTERED PROFESSIONAL ENGINEER MOHAN S. CHAR No. C057894 Exp. 6/30/10 CIVIL STATE OF CALIFORNIA

Pjack TABLE		
Girder Designation	Pjack/ Girder	Initial Force Coefficient @ ⊠
(A) & (L)	9450 kN	0.880
(B) & (K)	43 400 kN	0.776
(C)(F) & (J)	36 170 kN	0.675

MARK	DATE	DESCRIPTIONS	BY	CH'D
1	1/21/09	REVISE Pjack & PRESTRESSING PATH CG VALUES	MSC	TWD
2	3/9/09	STIRRUP SIZE REVISED	MSC	TWD

REVISION(S)

CONTRACT CHANGE ORDER NO. 101
SHEET 11 OF 16

Notes:
1. Structure depth varies linearly from Hinge EE to Hinge FE.
2. For Deck slab prestressing details, see "Eastbound Deck Details No. 3" sheet.
3. For Intermediate Diaphragm, see "Eastbound Deck Details No. 4" sheet.
4. For "Camber Diagram", see "Eastbound Camber Diagrams" sheet.
5. For additional Hair Pin reinforcement around ducts, see "Detail 2" on "Eastbound Hinge EE Details No. 5" sheet.

LEGEND
(A) indicates girder designation
0.5 L2 indicates fraction of each girder length in the span noted

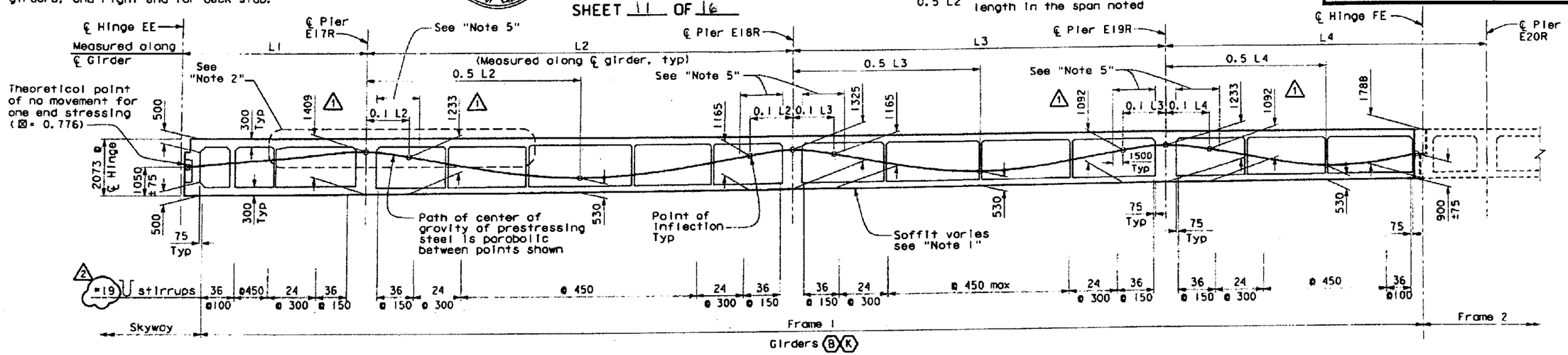

LONGITUDINAL SECTION-FRAME 1

No Scale

Note:
For Prestress Anchorage clearances at Girders (B) & (K) see "Eastbound Girder Details" sheet.

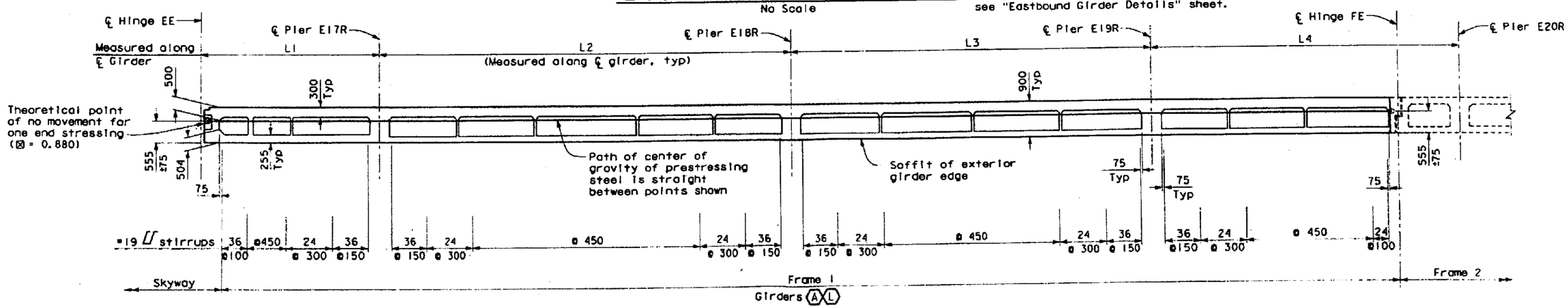

LONGITUDINAL SECTION-FRAME 1

No Scale

Note:
The Contractor shall verify all controlling field dimensions before ordering or fabricating any material.

Note:
Bikeway intermediate diaphragms not shown

ALL DIMENSIONS ARE IN MILLIMETERS UNLESS OTHERWISE SHOWN

SAN FRANCISCO OAKLAND BAY BRIDGE
EAST SPAN SEISMIC SAFETY PROJECT

OAKLAND APPROACH STRUCTURES - PHASE 1

EASTBOUND GIRDER LAYOUT NO. 2

DESIGN OVERSIGHT: SAM AKKAD, FRANCISCO CARPIO, BERNARD CHAN, HASAN EL-NATUR
SIGN OFF DATE 3/11/09

	BY	CHECKED
DESIGN	M. CHAR	T. DUDLEY
DETAILS	M. MORCILLO/M. ANDRASEK	M. CHAR
QUANTITIES	M. MORCILLO/Y. KIM	V. SIVAKOLUNDU/T. DUDLEY

PREPARED FOR THE STATE OF CALIFORNIA DEPARTMENT OF TRANSPORTATION

MOHAN S. CHAR
PROJECT ENGINEER

BRIDGE NO. 34-0006L/R
KILOMETER POST 1.6

CU 04
EA 0120L1

DISREGARD PRINTS BEARING EARLIER REVISION DATES

SHEET 99 OF 224

Rev. Date: 5-19-98

ORIGINAL SCALE IN MILLIMETERS FOR REDUCED PLANS 0 10 20 30 40 50 60 70 80 90 100

FILE => U:\bridge\TYL10502\2009 CCOs\PT CCO\04-0120L1-34-006-1-xgir-la-east2_b.dgn

DATE PLOTTED => 3/10/2009 TIME PLOTTED => 51:24:42 PM
USERNAME => LAN

DIST.	COUNTY	ROUTE	KILOMETER POST TOTAL PROJECT	SHEET NO.	TOTAL SHEETS
04	Ala	80	1.6/2.7	239R2	643

REGISTERED ENGINEER - CIVIL

1-29-07
PLANS APPROVAL DATE

PROFESSIONAL ENGINEER MOHAN S. CHAR No. C057894 Exp. 6/30/09 CIVIL STATE OF CALIFORNIA

The State of California or its officers or agents shall not be responsible for the accuracy or completeness of electronic copies of this plan sheet.

T.Y. LIN / MOFFATT & NICHOL
TWO HARRISON STREET, SUITE 500
SAN FRANCISCO, CA 94105

LIM & NASCIMENTO ENGINEERING CORPORATION
12 MAUCHLY, BLDG L
IRVINE, CA 92618

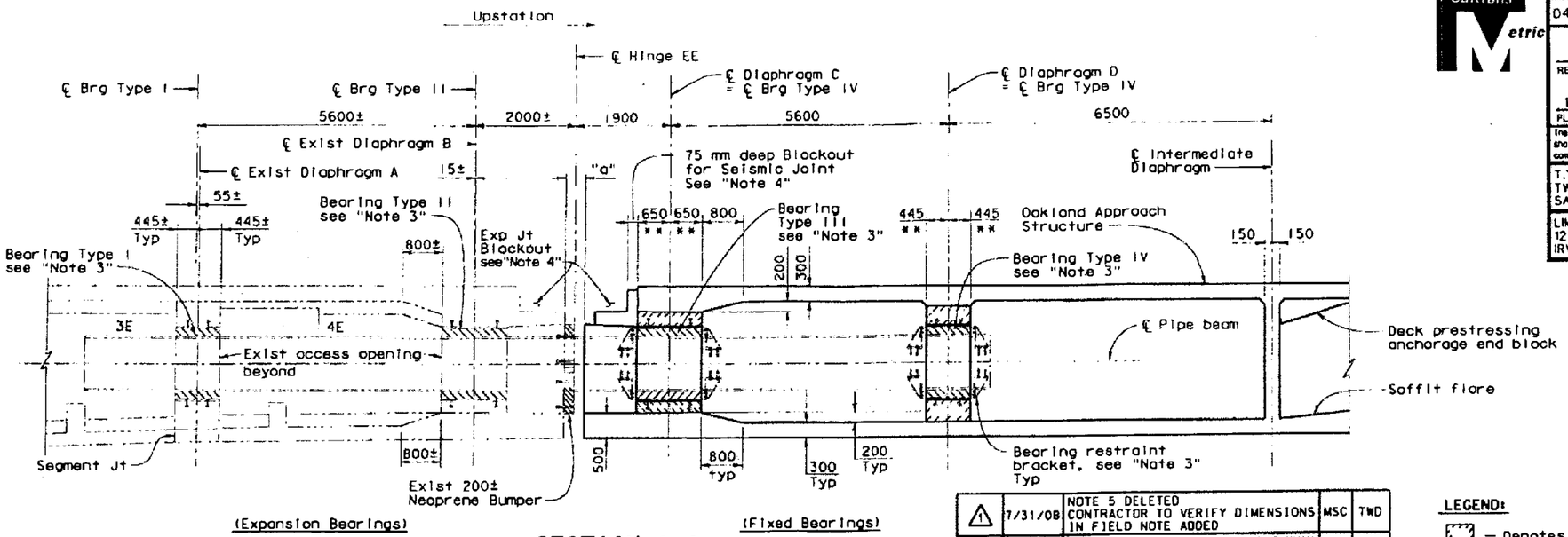

SECTION A-A

1:50

MARK	DATE	DESCRIPTIONS	BY	CH'D
1	7/31/08	NOTE 5 DELETED CONTRACTOR TO VERIFY DIMENSIONS IN FIELD NOTE ADDED	MSC	TWD
2	3/9/09	SEWER LINE RELOCATED TO MATCH SKYWAY ADJUSTED PIPE SLEEVE LOCATIONS LEGEND NOTE DELETED	MSC	TWD

REVISION(S)

CONTRACT CHANGE ORDER NO. 101
SHEET 12 OF 16

STAMP IS VALID FOR REVISION 1 & 2 ONLY

LEGEND:

- Denotes Closure Pour, see "Note 6"
- Denotes Bearing & Grout Installation
- (A) – Denotes Grid designation
- ** – Denotes Thickened Diaphragm between Girders (C) & (J) only

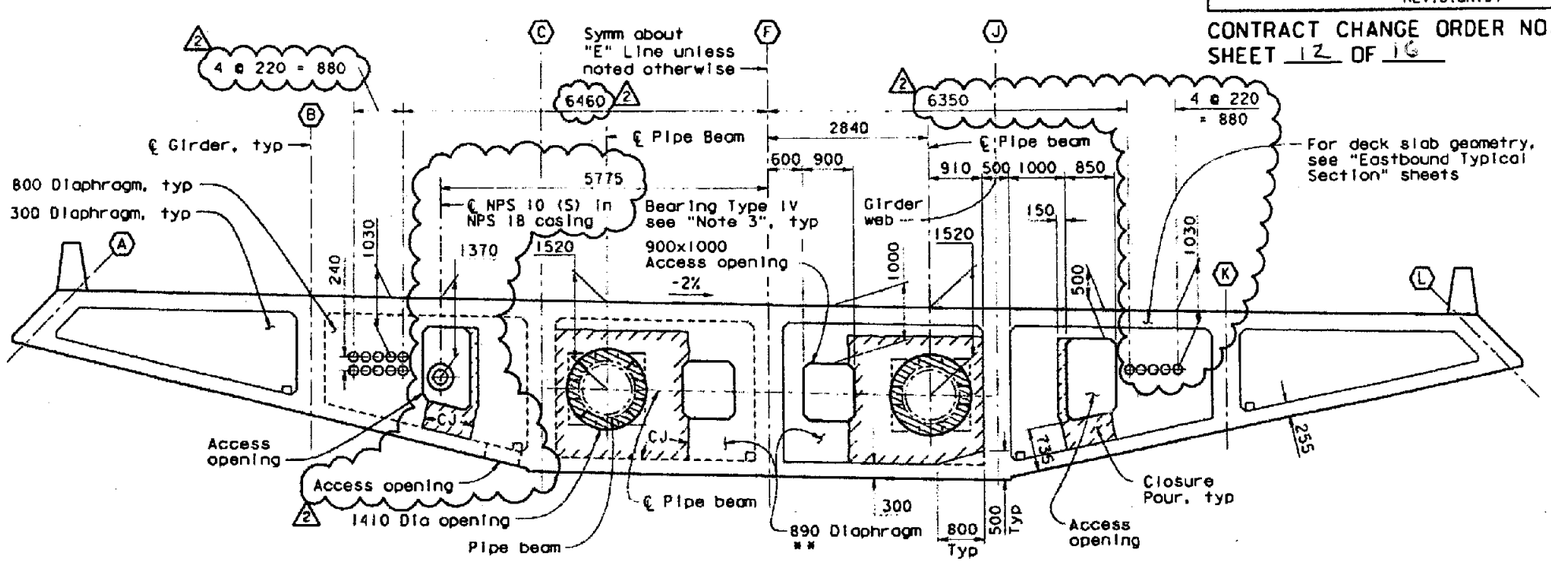

SECTION D-D

1:50

Notes:

1. For construction of the hinge assembly, see "Construction Sequence at Hinge E" sheet.
2. For dimensions not shown, see "Eastbound Hinge EE Details No. 1" and "Eastbound Hinge EE Details No. 3".
3. Pipe beams, circular segmented bearings and bearing restraint brackets shown in final positions. Contractor shall install pipe beams, bearings and restraint brackets into final positions. For details of contract work at Hinge EE, see "Construction Sequence at Hinge E" sheet. For Bearing assemblies grouted into final position, see "Hinge E Bearing Details No. 1 through No. 5" sheets.
4. For "a" dimension and Expansion Joint blockout detail, see "Deck Joint Details" sheet.

1

6. Concrete strength for closure pour shall be same as concrete strength for bridge superstructure.

1

Note: The Contractor shall verify all controlling field dimensions before ordering or fabricating any material.

ALL DIMENSIONS ARE IN MILLIMETERS UNLESS OTHERWISE SHOWN

DESIGN OVERSIGHT
SAM AKRAD FRANCISCO CARPIO BERNARD CHAN HASAN EL-NATUR
SIGN OFF DATE 3/11/09

	BY	CHECKED
DESIGN	M. CHAR	T. DUDLEY
DETAILS	N. MORCILLO/M. ANDRASEK	M. CHAR
QUANTITIES	N. MORCILLO/Y. KIM	V. SIVAKOLUNDU/T. DUDLEY

PREPARED FOR THE STATE OF CALIFORNIA DEPARTMENT OF TRANSPORTATION

MOHAN S. CHAR
PROJECT ENGINEER

CU 04
EA 0120L1

BRIDGE NO. 34-0006L/R
KILOMETER POST 1.6

SAN FRANCISCO OAKLAND BAY BRIDGE
EAST SPAN SEISMIC SAFETY PROJECT

OAKLAND APPROACH STRUCTURES - PHASE I

EASTBOUND HINGE EE DETAILS NO. 2

Rev. Date: 5-16-98

ORIGINAL SCALE IN MILLIMETERS FOR REDUCED PLANS 0 10 20 30 40 50 60 70 80 90 100

DISREGARD PRINTS BEARING EARLIER REVISION DATES

SHEET 126 OF 224

DATE 3/10/2009

DIST.	COUNTY	ROUTE	KILOMETER POST TOTAL PROJECT	SHEET NO.	TOTAL SHEETS
04	Ala	80	1.6/2.7	240R2	643

Caltrans Metric

REGISTERED ENGINEER - CIVIL

1-29-07
PLANS APPROVAL DATE

The State of California or its officers or agents shall not be responsible for the accuracy or completeness of electronic copies of this plan sheet.

REGISTERED PROFESSIONAL ENGINEER MOHAN S. CHAR No. C057894 Exp. 6/30/08 CIVIL STATE OF CALIFORNIA

T.Y. LIN / MOFFATT & NICHOL
TWO HARRISON STREET, SUITE 500
SAN FRANCISCO, CA 94105

LIM & NASCIMENTO ENGINEERING CORPORATION
12 MAUCHLY, BLDG L
IRVINE, CA 92618

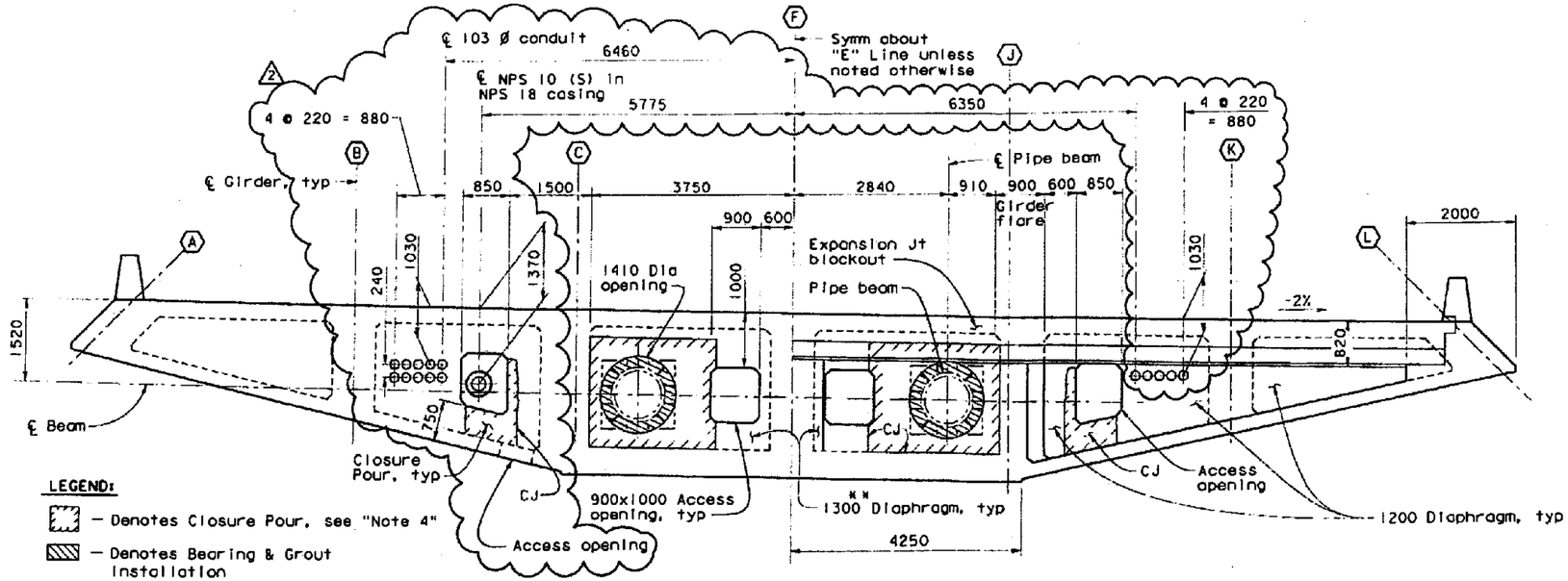

LEGEND:

- Denotes Closure Pour, see "Note 4"
- Denotes Bearing & Grout Installation
- (A) – Denotes Girder designation
- ** – Denotes thickened Diaphragm between Girders (C) & (J) only

SECTION C-C
1:50

Notes:

1. For dimensions not shown, see "Eastbound Hinge EE Details No. 1" and "Eastbound Hinge EE Details No. 2" sheets.
2. Working points (WP) are set based on 3.000 m at end of segment 4E in skyway structure and 2.500 m at "℄ Hinge FE".
3. △1
4. Concrete strength for closure pour shall be same as concrete strength for bridge superstructure.
5. For Dimension "a" and Blockout Details, see "Deck Joint Details" sheet.

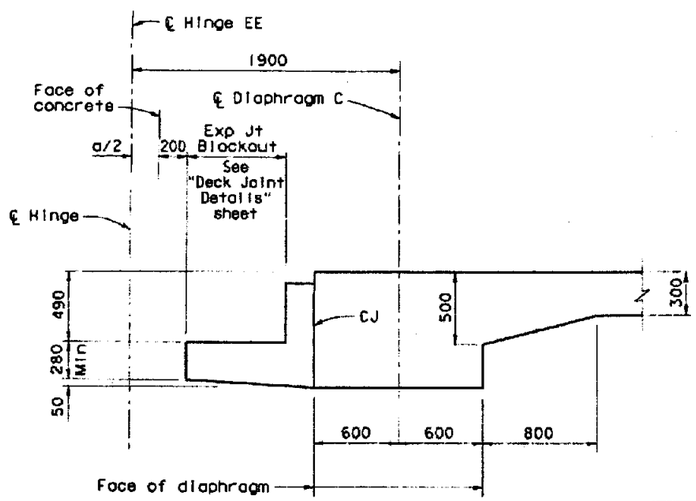

SECTION B-B
1:20

△1

Note: The Contractor shall verify all controlling field dimensions before ordering or fabricating any material.

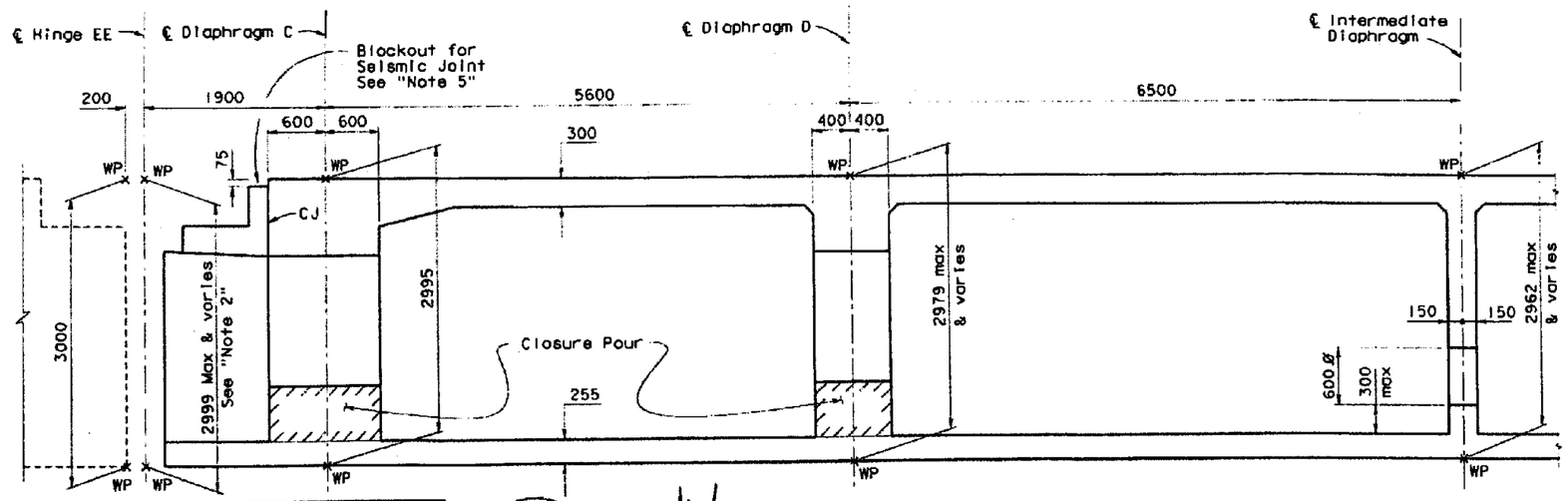

MARK	DATE	DESCRIPTIONS	BY	CH'D
△1	7/31/08	NOTE 3 DELETED: CONTRACTOR TO VERIFY DIMENSIONS IN FIELD NOTE ADDED	MSC	TWD
△2	3/9/09	SEWER LINE RELOCATED TO MATCH SKYWAY ADJUST PIPE SLEEVE LOCATIONS	MSC	TWD

REVISION(S)

REGISTERED PROFESSIONAL ENGINEER MOHAN S. CHAR No. C057894 Exp. 6/30/10 CIVIL STATE OF CALIFORNIA

STAMP IS VALID FOR REVISION △1 & △2 ONLY

SECTION E-E
No Scale

CONTRACT CHANGE ORDER NO. 101
SHEET 13 OF 16

ALL DIMENSIONS ARE IN MILLIMETERS UNLESS OTHERWISE SHOWN

SAN FRANCISCO OAKLAND BAY BRIDGE
EAST SPAN SEISMIC SAFETY PROJECT

OAKLAND APPROACH STRUCTURES - PHASE I

EASTBOUND HINGE EE DETAILS NO. 3

DESIGN OVERSIGHT: SAM AKRAD, FRANCISCO CARPIO, BERNARD CHAN, HASAN EL-HATIR
SIGN OFF DATE: 3/11/09

	BY	CHECKED
DESIGN	M. CHAR	T. DUDLEY
DETAILS	N. MORCILLO/M. ANDRASEK	M. CHAR
QUANTITIES	N. MORCILLO/Y. KIM	V. SIVAKOLUNDU/T. DUDLEY

PREPARED FOR THE STATE OF CALIFORNIA DEPARTMENT OF TRANSPORTATION

MOHAN S. CHAR
PROJECT ENGINEER

CU 04
EA 0120L1

BRIDGE NO. 34-0006L/R
KILOMETER POST 1.6

DISREGARD PRINTS BEARING EARLIER REVISION DATES

SHEET 127 OF 224

Rev. Date: 5-18-98

ORIGINAL SCALE IN MILLIMETERS FOR REDUCED PLANS 0 10 20 30 40 50 60 70 80 90 100

FILE > U:\BRIDGE\TYL\0502\2009 EEDs\Hinge Details EEDs\04 0120L1 34-0006 Hinge-0003L.dgn

DIST.	COUNTY	ROUTE	KILOMETER POST TOTAL PROJECT	SHEET NO.	TOTAL SHEETS
04	Ala	80	1.6/2.7	265R1	643

REGISTERED ENGINEER - CIVIL

1-29-07

PLANS APPROVAL DATE

The State of California or its officers or agents shall not be responsible for the accuracy or completeness of electronic copies of this plan sheet.

REGISTERED PROFESSIONAL ENGINEER MOHAN S. CHAR No. C057894 Exp. 6/30/08 CIVIL STATE OF CALIFORNIA

T.Y. LIN / MOFFATT & NICHOL
TWO HARRISON STREET, SUITE 500
SAN FRANCISCO, CA 94105

LIM & NASCIMENTO ENGINEERING CORPORATION
12 MAUCHLY, BLDG L
IRVINE, CA 92618

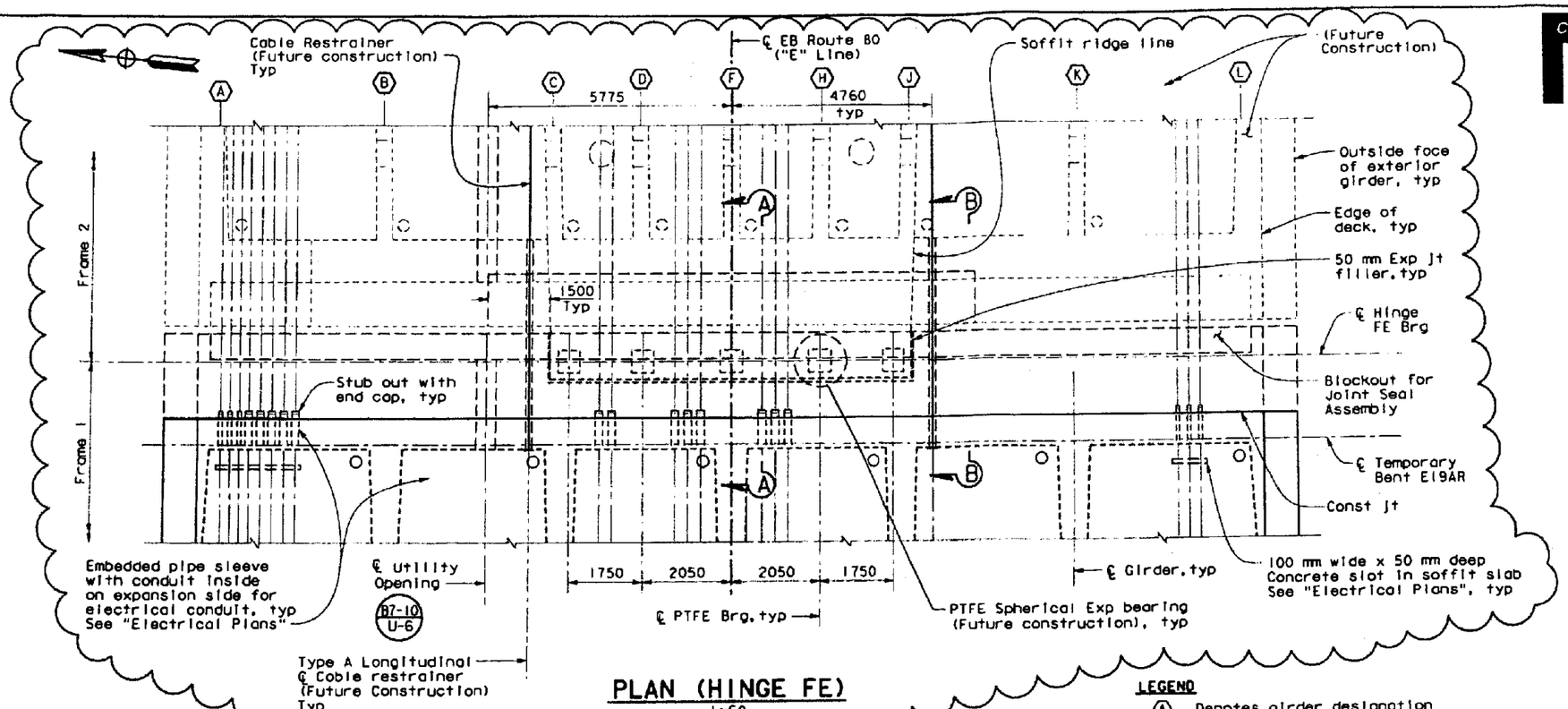

PLAN (HINGE FE)

1:60

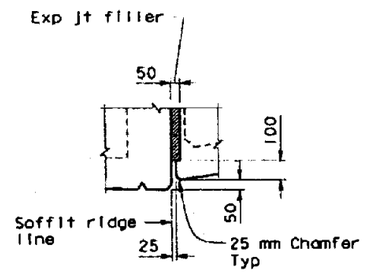

DETAIL 1

1:15

LEGEND

- (A) Denotes girder designation
- Denotes bundled bars
- Denotes headed bar (both ends)
- Denotes headed bar (one end)
- * Depth includes 410 mm max blockout for joint seal assembly

Notes:

1. For "Section A-A", see "Eastbound Hinge FE Details No. 2" sheet.
2. For "Section B-B", see "Eastbound Hinge FE Details No. 3" sheet.
3. For Access openings, see "Miscellaneous Details No. 1" sheet.

STAMP IS VALID FOR REVISION 1 ONLY

REGISTERED PROFESSIONAL ENGINEER MOHAN S. CHAR No. C057894 Exp. 6/30/10 CIVIL STATE OF CALIFORNIA

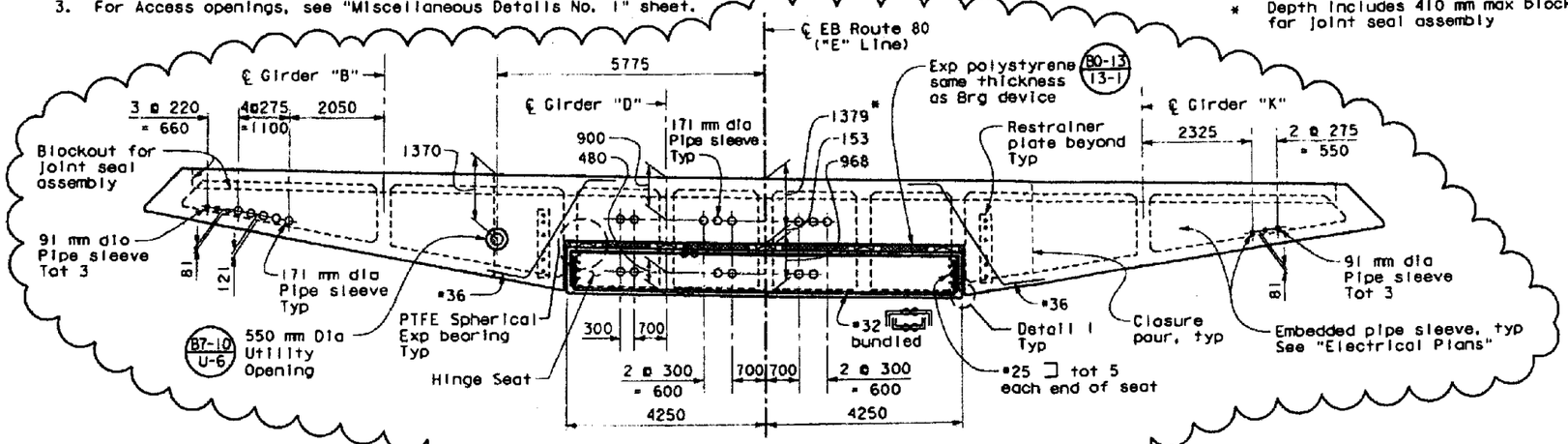

ELEVATION (HINGE FE)

1:60

MARK	DATE	DESCRIPTION	BY	CH'D
1	4/29/09	REVISED ELECTRICAL PIPE SLEEVE. SEWER LINE & CABLE RESTRAINER LOCATIONS; REVISED FUTURE HINGE SEAT DIMENSIONS	MSC	TWD

REVISION(S)

CONTRACT CHANGE ORDER NO. 101
SHEET 14 OF 16

ALL DIMENSIONS ARE IN MILLIMETERS UNLESS OTHERWISE SHOWN

DESIGN OVERSIGHT: SAM AKKAD, FRANCISCO CARPIO, BERNARD CHAN, HASAN EL-HATUR — 5/4/2009

SIGN OFF DATE

Rev. Date: 5-18-98

	BY	CHECKED
DESIGN	M. CHAR	T. DUDLEY
DETAILS	N. MORCILLO/M. ANDRASEK	M. CHAR
QUANTITIES	N. MORCILLO/Y. KIM	V. SIVAKOLUNDU/T. DUDLEY

PREPARED FOR THE STATE OF CALIFORNIA DEPARTMENT OF TRANSPORTATION

MOHAN S. CHAR, PROJECT ENGINEER

CU 04
EA 0120L1

BRIDGE NO. 34-0006L/R
KILOMETER POST 1.6

DISREGARD PRINTS BEARING EARLIER REVISION DATES

ORIGINAL SCALE IN MILLIMETERS FOR MODIFIED PLANS 0 10 20 30 40 50 60 70 80 90 100

SAN FRANCISCO OAKLAND BAY BRIDGE
EAST SPAN SEISMIC SAFETY PROJECT

OAKLAND APPROACH STRUCTURES - PHASE 1

EASTBOUND HINGE FE DETAILS NO. 1

REVISION DATES (PRELIMINARY STAGE ONLY) 3/30/06 6/30/06 10/30/06 2/28/06 6/28/06 11/28/06 1/28/06 4/28/06 7/28/06 11/28/06

SHEET 152 OF 224

DIST.	COUNTY	ROUTE	KILOMETER POST TOTAL PROJECT	SHEET NO.	TOTAL SHEETS
04	Ala	80	1.6/2.7	266R1	643

REGISTERED ENGINEER - CIVIL

1-29-07

PLANS APPROVAL DATE

REGISTERED PROFESSIONAL ENGINEER MOHAN S. CHAR No. C057894 Exp. 6/30/08 CIVIL STATE OF CALIFORNIA

The State of California or its officers or agents shall not be responsible for the accuracy or completeness of electronic copies of this plan sheet.

T.Y. LIN / MOFFATT & NICHOL
TWO HARRISON STREET, SUITE 500
SAN FRANCISCO, CA 94105

LIM & NASCIMENTO ENGINEERING CORPORATION
12 MAUCHLY, BLDG L
IRVINE, CA 92618

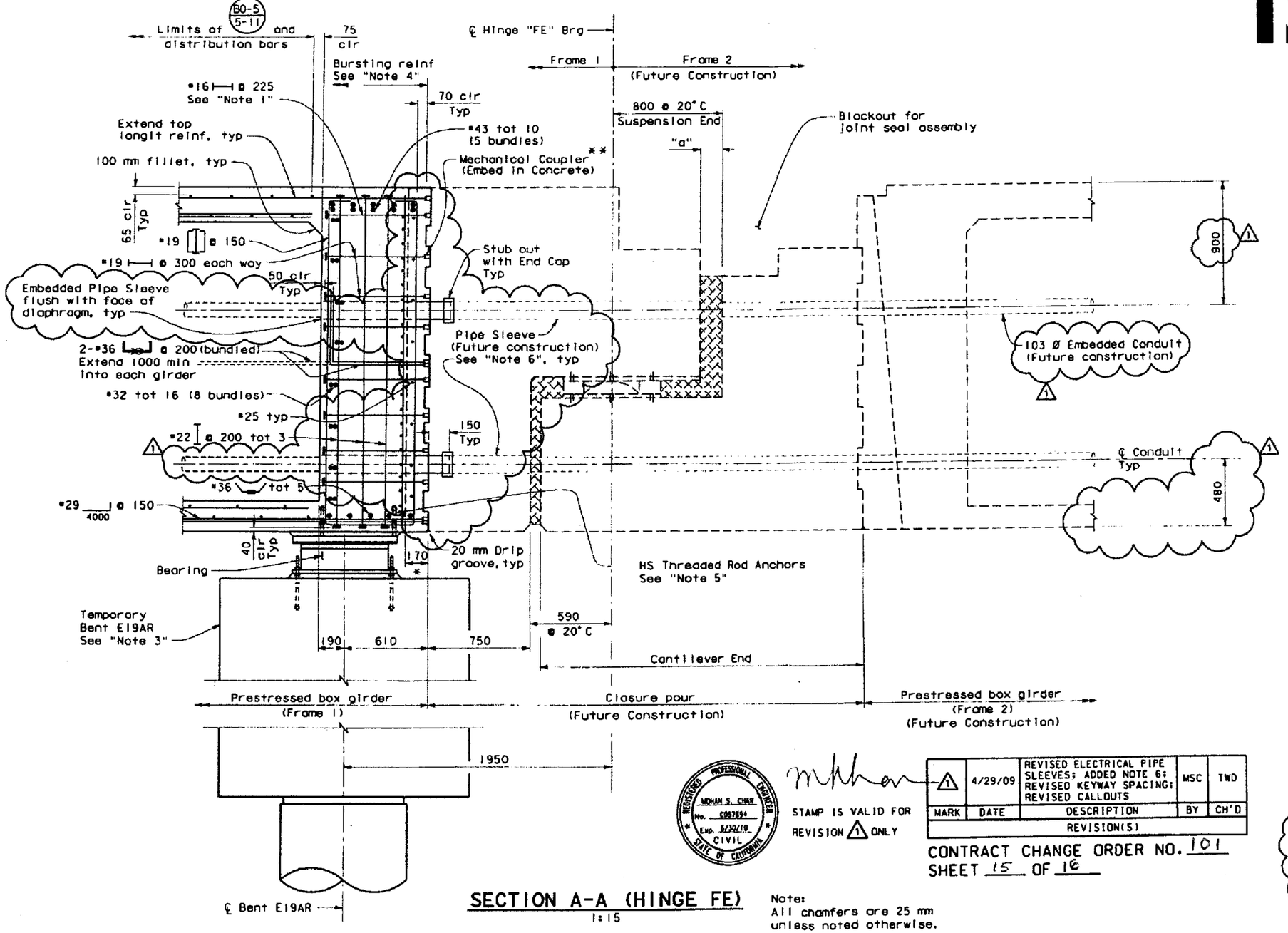

SECTION A-A (HINGE FE)

1:15

Note:
All chamfers are 25 mm unless noted otherwise.

LEGEND

- Denotes mechanical splice
- Denotes bundled bars
- Denotes headed bar (both ends)
- ** Mechanical Coupler shall meet Ultimate Splice requirements
- * Assume 170 mm to post-tensioning anchor recess

Notes:

1. No lap splices allowed in main diaphragm reinforcing.
2. For "a" dimension, see "Deck Joint Details" sheet.
3. For Temporary Bent E19AR Details, see "Eastbound Temporary Bent E19AR No. 1 & No. 2" sheets.
4. Bursting reinforcing similar to "Detail 1" on "Eastbound Hinge FE Details No. 3" sheet.
5. The Contractor can modify the anchor locations if required, subject to approval of the Engineer.
6. The Contractor shall mate test pipe sleeves that represent future construction with pipe sleeves from Frame 1 to ensure overall alignment of the mated pipe sleeves is straight prior to concrete pour in Frame 1. (1)

REGISTERED PROFESSIONAL ENGINEER MOHAN S. CHAR No. C057894 Exp. 6/30/10 CIVIL STATE OF CALIFORNIA

STAMP IS VALID FOR REVISION (1) ONLY

MARK	DATE	DESCRIPTION	BY	CH'D
1	4/29/09	REVISED ELECTRICAL PIPE SLEEVES; ADDED NOTE 6; REVISED KEYWAY SPACING; REVISED CALLOUTS	MSC	TWD
REVISION(S)				

CONTRACT CHANGE ORDER NO. 101
SHEET 15 OF 16

ALL DIMENSIONS ARE IN MILLIMETERS UNLESS OTHERWISE SHOWN

SAN FRANCISCO OAKLAND BAY BRIDGE
EAST SPAN SEISMIC SAFETY PROJECT

OAKLAND APPROACH STRUCTURES - PHASE 1

EASTBOUND HINGE FE DETAILS NO. 2

DESIGN OVERSIGHT: SAM AKKAD, FRANCISCO CARRIO, BERNARD CHAN, MASAMPEL-NATUR — SIGN OFF DATE 5/4/2009

DESIGN	BY M. CHAR	CHECKED T. DUDLEY
DETAILS	BY N. MORCILLO/M. ANDRASEK	CHECKED M. CHAR
QUANTITIES	BY N. MORCILLO/Y. KIM	CHECKED V. SIVAKOLUNDU/T. DUDLEY

PREPARED FOR THE STATE OF CALIFORNIA DEPARTMENT OF TRANSPORTATION

MOHAN S. CHAR, PROJECT ENGINEER

BRIDGE NO. 34-0006L/R
KILOMETER POST 1.6

CU 04
EA 0120L1

DISREGARD PRINTS BEARING EARLIER REVISION DATES

REVISION DATES (PRELIMINARY STAGE ONLY): 01/30/06 02/28/06 03/30/06 04/27/06 05/31/06 6/30/06 7/31/06 8/30/06 9/29/06 10/27/06 11/8/06

SHEET 153 OF 224

Rev. Date: 3-18-98

ORIGINAL SCALE IN MILLIMETERS FOR REDUCED PLANS 0 10 20 30 40 50 60 70 80 90 100

DIST.	COUNTY	ROUTE	KILOMETER POST TOTAL PROJECT	SHEET NO.	TOTAL SHEETS
04	Alo	80	1.6/2.7	292R2	643

REGISTERED ENGINEER - CIVIL

1-29-07

PLANS APPROVAL DATE

The State of California or its officers or agents shall not be responsible for the accuracy or completeness of electronic copies of this plan sheet.

REGISTERED PROFESSIONAL ENGINEER MOHAN S. CHAR No. C057894 Exp. 6/30/08 CIVIL STATE OF CALIFORNIA

T.Y. LIN / MOFFATT & NICHOL
TWO HARRISON STREET, SUITE 500
SAN FRANCISCO, CA 94105

LIM & NASCIMENTO ENGINEERING CORPORATION
12 MAUCHLY, BLDG L
IRVINE, CA 92618

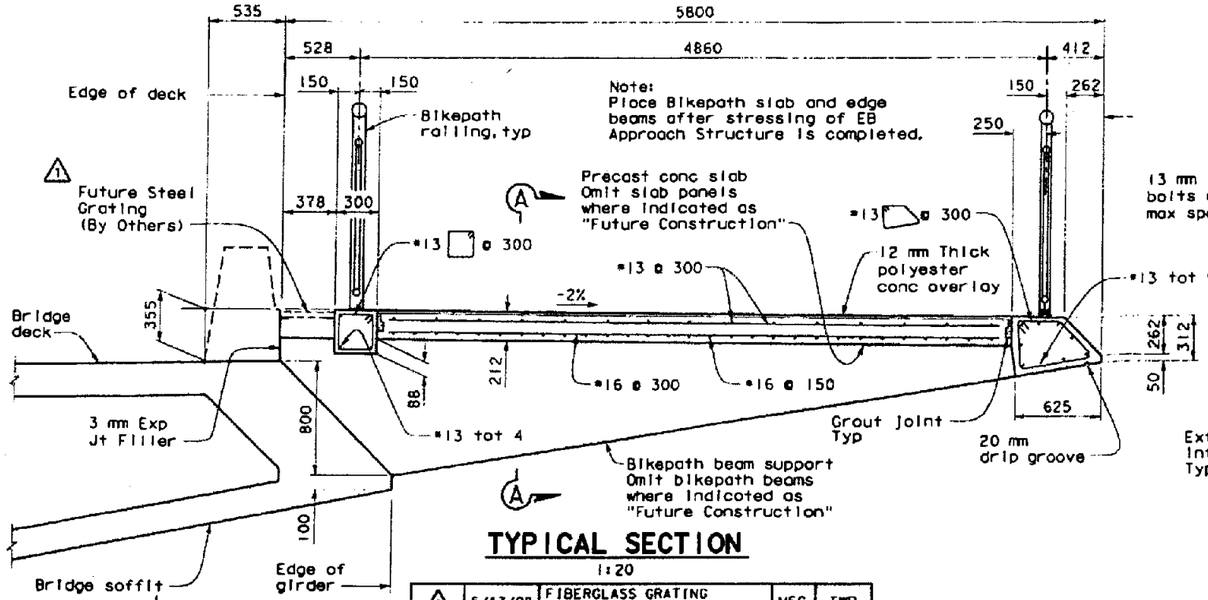

TYPICAL SECTION

1:20

MARK	DATE	DESCRIPTIONS	BY	CH'D
1	5/13/08	FIBERGLASS GRATING CHANGED TO STEEL GRATING	MSC	TWD
2	3/9/09	ADDED DECK ACCESS OPENING ADDED DIAPHRAGM OPENINGS	MSC	TWD

REVISION(S)

STAMP IS VALID FOR REVISION 1 & 2 ONLY

REGISTERED PROFESSIONAL ENGINEER MOHAN S. CHAR No. C057894 Exp. 6/30/10 CIVIL STATE OF CALIFORNIA

CONTRACT CHANGE ORDER NO. 101
SHEET 16 OF 16

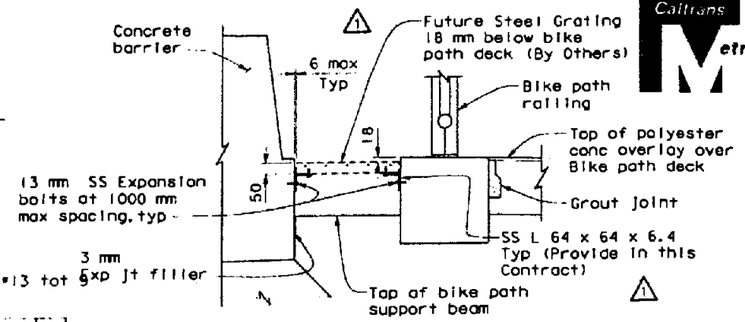

BIKEPATH GRATING DETAIL

1:10

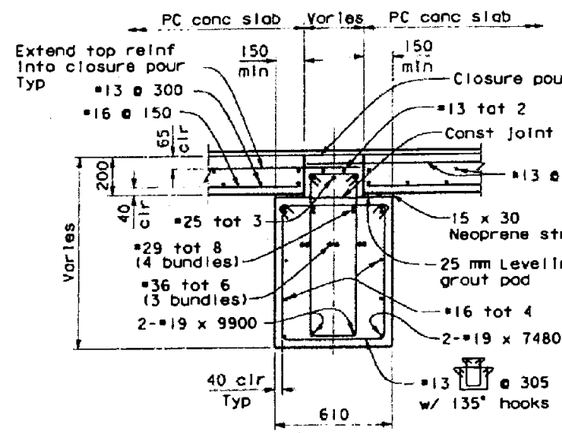

SECTION A-A

1:15

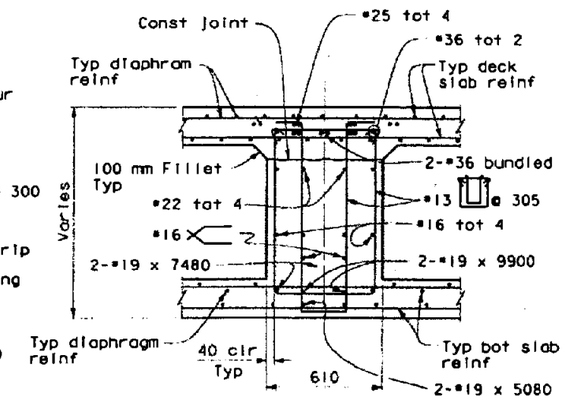

SECTION B-B

1:15

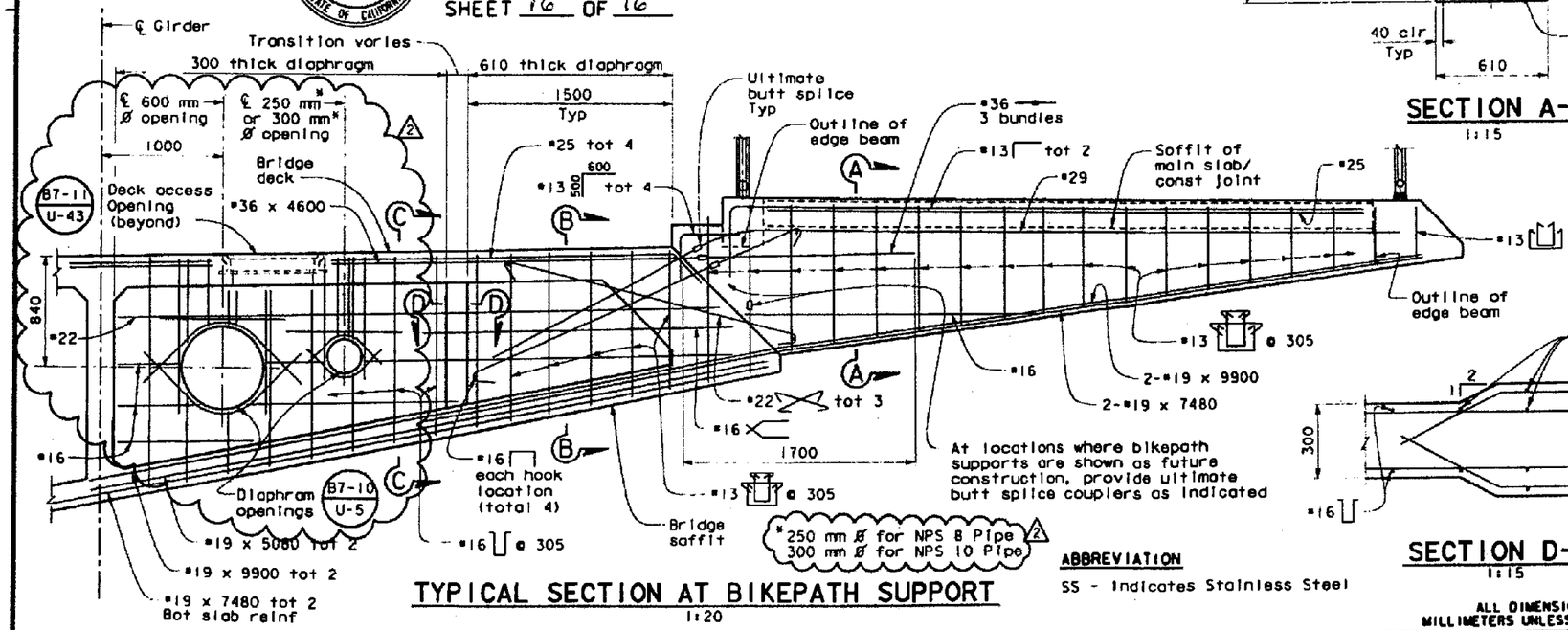

TYPICAL SECTION AT BIKEPATH SUPPORT

1:20

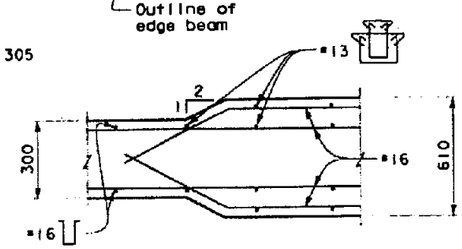

SECTION D-D

1:15

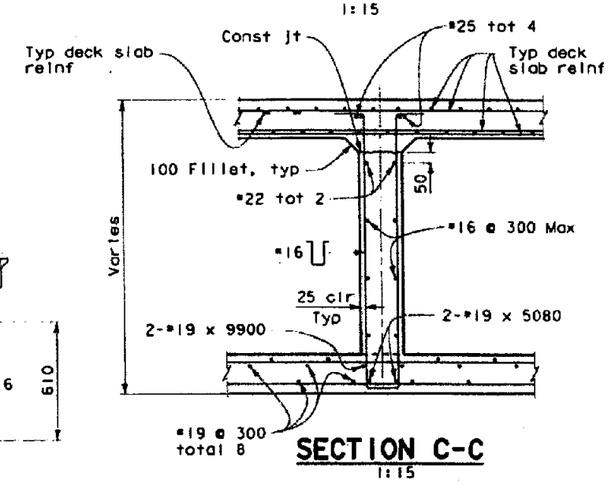

SECTION C-C

1:15

ABBREVIATION

SS - Indicates Stainless Steel

ALL DIMENSIONS ARE IN MILLIMETERS UNLESS OTHERWISE SHOWN

DESIGN OVERSIGHT: SAM ABRAO, FRANCISCO CAMPID, BERNARD CHAR, HASAN EL-NATUR
8-10-06
SIGN OFF DATE

Rev. Date: 5-15-08

	BY	CHECKED
DESIGN	M. CHAR	T. DUDLEY
DETAILS	N. MORCILLO/M. ANDRASEK	M. CHAR
QUANTITIES	N. MORCILLO/Y. KIM	V. SIVAKOLUNDU/T. DUDLEY

ORIGINAL SCALE IN MILLIMETERS FOR REDUCED PLANS 0 10 20 30 40 50 60 70 80 90 100

PREPARED FOR THE STATE OF CALIFORNIA DEPARTMENT OF TRANSPORTATION

MOHAN S. CHAR
PROJECT ENGINEER

CU 04
EA 0120L1

DISREGARD PRINTS BEARING EARLIER REVISION DATES

BRIDGE NO. 34-0006L/R
KILOMETER POST 1.6

SAN FRANCISCO OAKLAND BAY BRIDGE
EAST SPAN SEISMIC SAFETY PROJECT

OAKLAND APPROACH STRUCTURES - PHASE I

EASTBOUND BIKEPATH DETAILS NO. 2

SHEET 179 OF 224

DATE PLOTTED => 5/23/2009 TIME PLOTTED => 5:23:00 PM

USERNAME => AN

STATE OF CALIFORNIA - DEPARTMENT OF TRANSPORTATION

CONTRACT CHANGE ORDER MEMORANDUM

DATE: 3/24/2009 Page 1 of 1

TO: AMER BATA / BEN GHAFGHAZI	FILE: E.A. 04 - 0120L4
FROM: BEN GHAFGHAZI	CO-RTE-PM ALA-80-1.6/2.7
	FED. NO. NO FED AID
CCO#: 101 SUPPLEMENT#: 0 Category Code: CHPT	CONTINGENCY BALANCE (incl. this change) $6,523,230.20
COST: $100,000.00 INCREASE ☑ DECREASE ☐	HEADQUARTERS APPROVAL REQUIRED? ☐ YES ☑ NO
SUPPLEMENTAL FUNDS PROVIDED: $0.00	IS THIS REQUEST IN ACCORDANCE WITH ENVIRONMENTAL DOCUMENTS? ☑ YES ☐ NO
CCO DESCRIPTION: Modify blockouts and access openings EB.	**PROJECT DESCRIPTION:** Construct bridge, roadway, building and electrical system.

Original Contract Time:	Time Adj. This Change:	Previously Approved CCO Time Adjustments:	Percentage Time Adjusted: (including this change)	Total # of Unreconciled Deferred Time CCO(s): (including this change)
810 Day(s)	DEF Day(s)	184 Day(s)	23 %	10

THIS CHANGE ORDER PROVIDES FOR:

Replacing embedded electrical conduits with embedded sleeves and blockout openings and revise access openings in Frame 1 of Bridge No. 34-0006R. Modifying reinforcing steel around the sleeves and building formwork to accommodate the added blockouts. Relocating the eastbound sewer line in the Oakland Touch Down (OTD) superstructure to align with the existing sewer line from the EB Skyway superstructure. All work is as shown on sheets 2 of 16 through 16 of 16 of the CCO.

This change is required because the embedded conduits for routing of electrical conduits as shown on the original contract plans are not constructible. The embedded conduits will be replaced with embedded sleeves and blockout openings. Blockouts are not included in the contract plans. Also, the location of the sewer line from the eastbound Skyway structure does not match the location of the OTD sewer line shown on the contract plans. The location of the sewer line will be revised to match the Skyway.

This work will be paid as Extra Work at Force Account for $100,000.00, which can be financed from the contingency fund.

This change has been discussed and concurred with Hasan El Natur of Structures Design; Mohan Char, structure designer of LAN Engineering; Lina Ellis of Structures Maintenance; Patrick Treacy, HQ Construction Coordinator; Mike Forner, SFOBB Construction Manager; and Ken Terpstra, Project Manager.

Adjustment of contract time is deferred pending completion of the work specified in this change as it may affect the controlling operation. Determination of a commensurate time extension will be made in accordance with Section 10-1.14, "Progress Schedule (Critical Path Method)," of the Special Provisions and Section 8-1.07, "Liquidated Damages," of the Standard Specifications.

CONCURRED BY:			
Construction Engineer:	Ben Ghafghazi	Date	6/5/09
Bridge Engineer:	Mehran Ardakanian	Date	06/05/09
Project Engineer:	Hasan El-Natur, Structures Design	Date	3/6/09
Project Manager:	Ken Terprstra	Date	4/3/09
FHWA Rep.:		Date	
Environmental:		Date	
Other (specify):	Lina Ellis, Structures Maint.	Date	3/16/09
Other (specify):	Mohan Char, LAN Engineering	Date	3/6/09
District Prior Approval By:	Mike Forner, Principal TE	Date	3/20/09
HQ (Issue Approve) By:		Date	
Resident Engineer's Signature:		Date	6/5/09

ESTIMATE OF COST	THIS REQUEST	TOTAL TO DATE
ITEMS	$0.00	$0.00
FORCE ACCOUNT	$100,000.00	$100,000.00
AGREED PRICE	$0.00	$0.00
ADJUSTMENT	$0.00	$0.00
TOTAL	$100,000.00	$100,000.00

FEDERAL PARTICIPATION

☐ PARTICIPATING ☐ PARTICIPATING IN PART ☑ NONE
☐ NON-PARTICIPATING (MAINTENANCE) ☐ NON-PARTICIPATING

FEDERAL SEGREGATION (if more than one Funding Source or P.I.P. type)
☑ CCO FUNDED PER CONTRACT ☐ CCO FUNDED AS FOLLOWS

FEDERAL FUNDING SOURCE	PERCENT

ADA Notice: For individuals with sensory disabilities, this document is available in alternate formats. For information call: (916) 654-6410 or TDD (916) 654-3880 or write Records and Forms Management, 1120 N Street, MS-89, Sacramento, CA 95814.

STATE OF CALIFORNIA - DEPARTMENT OF TRANSPORTATION

CONTRACT CHANGE ORDER MEMORANDUM

DATE: 3/24/2009 Page 1 of 1

TO: AMER BATA / BEN GHAFGHAZI	FILE: E.A. 04 - 0120L4
FROM: BEN GHAFGHAZI	CO-RTE-PM ALA-80-1.6/2.7
	FED. NO. NO FED AID
CCO#: 101 SUPPLEMENT#: 0 Category Code: CHPT	CONTINGENCY BALANCE (incl. this change) $6,523,230.20
COST: $100,000.00 INCREASE ☑ DECREASE ☐	HEADQUARTERS APPROVAL REQUIRED? ☐ YES ☑ NO
SUPPLEMENTAL FUNDS PROVIDED: $0.00	IS THIS REQUEST IN ACCORDANCE WITH ENVIRONMENTAL DOCUMENTS? ☑ YES ☐ NO
CCO DESCRIPTION: Modify blockouts and access openings EB.	**PROJECT DESCRIPTION:** Construct bridge, roadway, building and electrical system.

Original Contract Time:	Time Adj. This Change:	Previously Approved CCO Time Adjustments:	Percentage Time Adjusted: (including this change)	Total # of Unreconciled Deferred Time CCO(s): (including this change)
810 Day(s)	DEF Day(s)	184 Day(s)	23 %	10

THIS CHANGE ORDER PROVIDES FOR:

Replacing embedded electrical conduits with embedded sleeves and blockout openings and revise access openings in Frame 1 of Bridge No. 34-0006R. Modifying reinforcing steel around the sleeves and building formwork to accommodate the added blockouts. Relocating the eastbound sewer line in the Oakland Touch Down (OTD) superstructure to align with the existing sewer line from the EB Skyway superstructure. All work is as shown on sheets 2 of 16 through 16 of 16 of the CCO.

This change is required because the embedded conduits for routing of electrical conduits as shown on the original contract plans are not constructible. The embedded conduits will be replaced with embedded sleeves and blockout openings. Blockouts are not included in the contract plans. Also, the location of the sewer line from the eastbound Skyway structure does not match the location of the OTD sewer line shown on the contract plans. The location of the sewer line will be revised to match the Skyway.

This work will be paid as Extra Work at Force Account for $100,000.00, which can be financed from the contingency fund.

This change has been discussed and concurred with Hasan El Natur of Structures Design; Mohan Char, structure designer of LAN Engineering; Lina Ellis of Structures Maintenance; Patrick Treacy, HQ Construction Coordinator; Mike Forner, SFOBB Construction Manager; and Ken Terpstra, Project Manager.

Adjustment of contract time is deferred pending completion of the work specified in this change as it may affect the controlling operation. Determination of a commensurate time extension will be made in accordance with Section 10-1.14, "Progress Schedule (Critical Path Method)," of the Special Provisions and Section 8-1.07, "Liquidated Damages," of the Standard Specifications.

CONCURRED BY:			
Construction Engineer:	Ben Ghafghazi	Date	6/5/09
Bridge Engineer:	Mehran Ardakanian	Date	06/05/09
Project Engineer:	Hasan El-Natur, Structures Design	Date	3/6/09
Project Manager:	Ken Terprstra	Date	4/3/09
FHWA Rep.:		Date	
Environmental:		Date	
Other (specify):	Lina Ellis, Structures Maint.	Date	3/16/09
Other (specify):	Mohan Char, LAN Engineering	Date	3/6/09
District Prior Approval By:	Mike Forner, Principal TE	Date	3/20/09
HQ (Issue Approve) By:		Date	
Resident Engineer's Signature:		Date	6/5/09

ESTIMATE OF COST

	THIS REQUEST	TOTAL TO DATE
ITEMS	$0.00	$0.00
FORCE ACCOUNT	$100,000.00	$100,000.00
AGREED PRICE	$0.00	$0.00
ADJUSTMENT	$0.00	$0.00
TOTAL	$100,000.00	$100,000.00

FEDERAL PARTICIPATION

☐ PARTICIPATING ☐ PARTICIPATING IN PART ☑ NONE
☐ NON-PARTICIPATING (MAINTENANCE) ☐ NON-PARTICIPATING

FEDERAL SEGREGATION (if more than one Funding Source or P.I.P. type)
☑ CCO FUNDED PER CONTRACT ☐ CCO FUNDED AS FOLLOWS

FEDERAL FUNDING SOURCE	PERCENT

ADA Notice: For individuals with sensory disabilities, this document is available in alternate formats. For information call: (916) 654-6410 or TDD (916) 654-3880 or write Records and Forms Management, 1120 N Street, MS-89, Sacramento, CA 95814.

CONTRACT CHANGE ORDER

Change Requested by: Engineer

CCO 101	Suppl. No. 0	Contract No. 04 - 0120L4	Road ALA-80-1.6/2.7	FED. AID LOC.: NO FED AID

To: **M C M CONSTRUCTION INC**

You are directed to make the following changes from the plans and specifications or do the following described work not included in the plans and specifications for this contract. ***NOTE: This change order is not effective until approved by the Engineer.***

Description of work to be done, estimate of quantities and prices to be paid. (Segregate between additional work at contract price, agreed price and force account.) Unless otherwise stated, rates for rental of equipment cover only such time as equipment is actually used and no allowance will be made for idle time. This last percentage shown is the net accumulated increase or decrease from the original quantity in the Engineer's Estimate.

Extra Work at Force Account:

Replace the embedded electrical conduits with embedded sleeves and blockout openings and revise access openings in Frame 1 of Bridge No. 34-0006R. Modify reinforcing steel around the sleeves and build formwork to accommodate the added blockouts. All work shall be in accordance with Section 10-1.67, "Reinforcement," of the Special Provisions. Relocate the East Bound (EB) sewer line in the Oakland Touch Down (OTD) Superstructure to align with the existing sewer line from the EB Skyway Superstructure. All work is as shown on sheets 2 of 16 through 16 of 16 of this CCO.

Estimated cost of Extra Work at Force Account $100,000.00

Estimated Cost: Increase ☑ **Decrease** ☐ **$100,000.00**

By reason of this order the time of completion will be adjusted as follows: Deferred

Submitted by		
Signature	Resident Engineer BEN GHAFGHAZI	Date 6/2/09
Approval Recommended by		
Signature	Construction Manager Amer Bata	Date 6/2/09
Engineer Approval by		
Signature	Construction Manager Amer Bata	Date 11/19/09

We the undersigned contractor, have given careful consideration to the change proposed and agree, if this proposal is approved, that we will provide all equipment, furnish the materials, except as may otherwise be noted above, and perform all services necessary for the work above specified, and will accept as full payment therefor the prices shown above.

NOTE: If you, the contractor, do not sign acceptance of this order, your attention is directed to the requirements of the specifications as to proceeding with the ordered work and filing a written protest within the time therein specified.

Contractor Acceptance by		
Signature	(Print name and title) EDMUNDO A. PUCHI, TREASURER	Date 10/27/09

DIST.	COUNTY	ROUTE	KILOMETER POST TOTAL PROJECT	SHEET NO.	TOTAL SHEETS
04	Ala	80	1.6/2.7	121R2	643

REGISTERED ENGINEER - CIVIL

1-29-07
PLANS APPROVAL DATE

REGISTERED PROFESSIONAL ENGINEER MOHAN S. CHAR No. C057894 Exp. 6/30/08 CIVIL STATE OF CALIFORNIA

The State of California or its officers or agents shall not be responsible for the accuracy or completeness of electronic copies of this plan sheet.

T.Y. LIN / MOFFATT & NICHOL
TWO HARRISON STREET, SUITE 500
SAN FRANCISCO, CA 94105

LIM & NASCIMENTO ENGINEERING CORPORATION
12 MAUCHLY, BLDG L
IRVINE, CA 92618

To get to the Caltrans web site, go to: http://www.dot.ca.gov

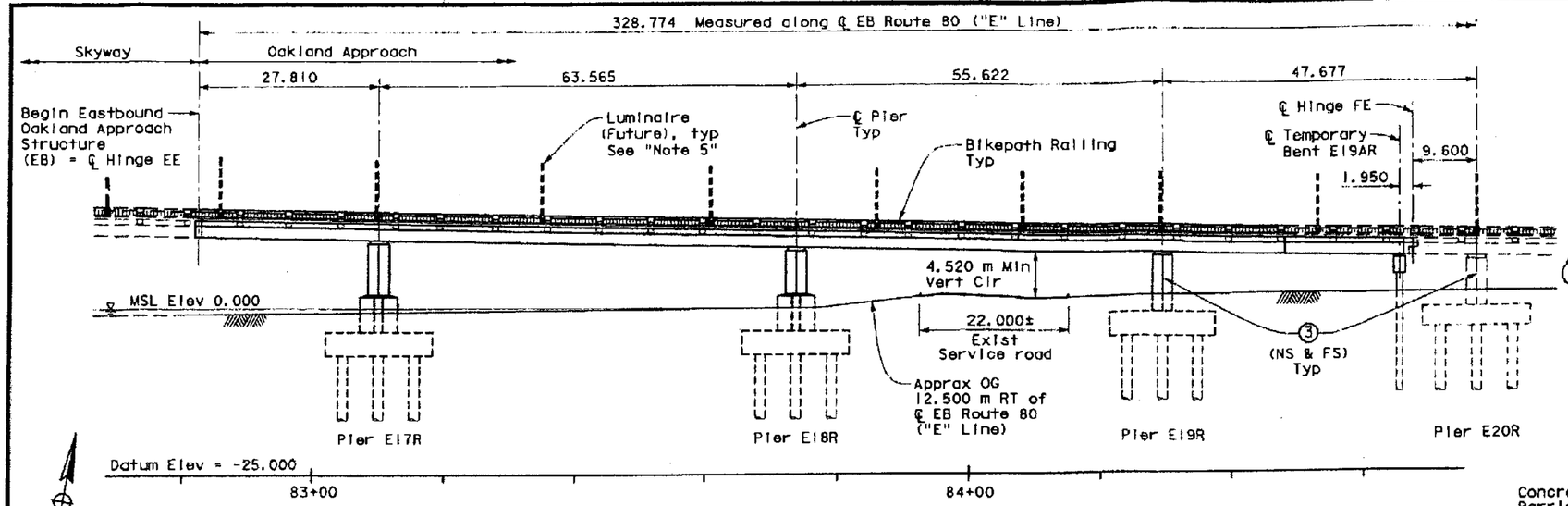

DEVELOPED ELEVATION
1:400

DECK DRAIN LOCATIONS*	
Station	Side
83+20.000	Rt
83+70.000	Rt
84+20.000	Rt
84+50.000	Rt

* See "Note 8"

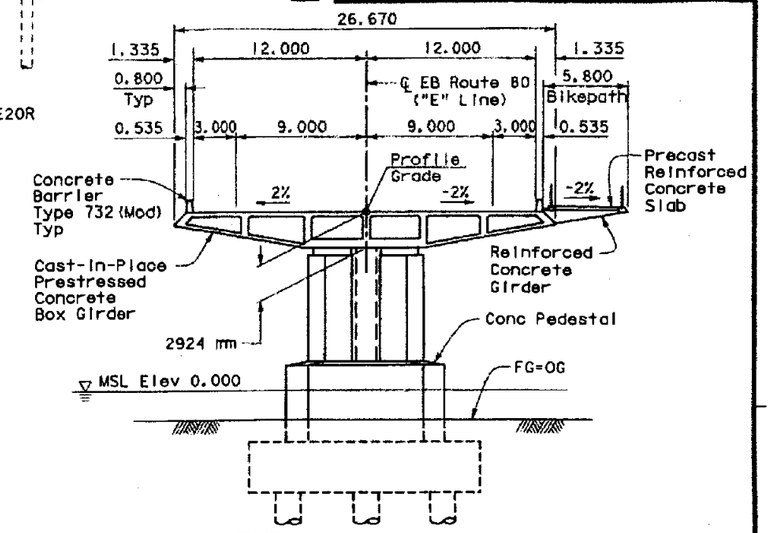

TYPICAL SECTION
1:200

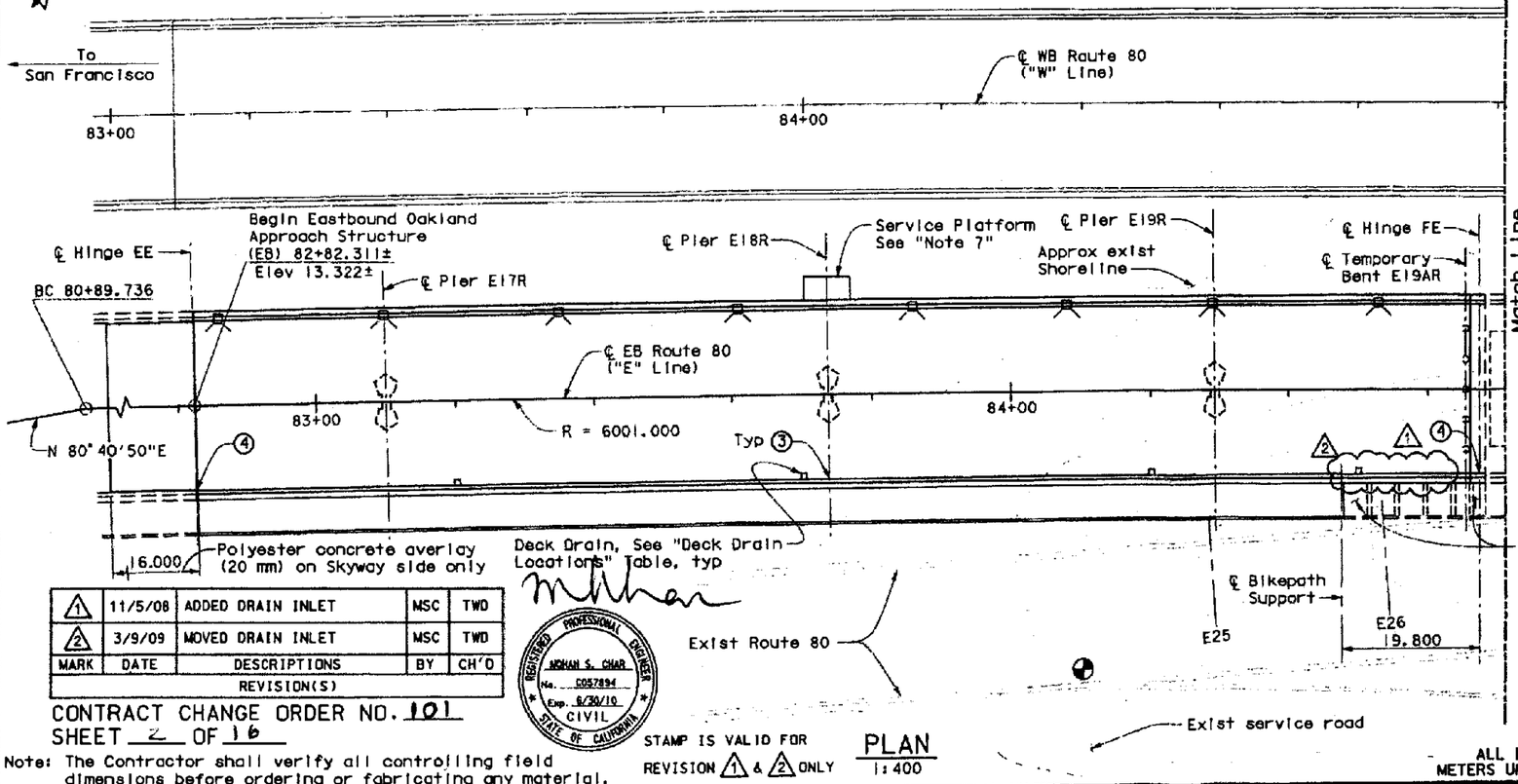

PLAN
1:400

Notes:
1. Pier E17R shown. Piers E18R and E19R similar except where shown otherwise.
2. For Westbound Structure, see "Westbound Structure Plan No. 1 and No. 2" sheets.
3. For Deck Drain Details see "Miscellaneous Details No. 2" sheet.
4. For Luminaire Supports see "Miscellaneous Details No. 1" sheet.
5. For Luminaire and Locations, see "Roadway Plans".
6. Utilities not shown. See "Eastbound Typical Section 1 & 2" sheets.
7. For Service Platform, see "Service Platforms, Utility Vault and Precast Wall General Plan 1" sheet.
8. For Schematic Deck Drain Layout, see "Miscellaneous Details No. 4" sheet.

LEGEND
- → Indicates Direction of Travel
- Indicates luminaire
- Indicates deck drain, Type D-1 (Mod)
- Point of minimum vertical clearance at exist Route 80
- (3) Paint Pier Number (NS & FS)
- (4) Paint hinge name "Hinge EE" or "Hinge FE" as applicable

MARK	DATE	DESCRIPTIONS	BY	CH'D
1	11/5/08	ADDED DRAIN INLET	MSC	TWD
2	3/9/09	MOVED DRAIN INLET	MSC	TWD

REVISION(S)

CONTRACT CHANGE ORDER NO. 101
SHEET 2 OF 16

REGISTERED PROFESSIONAL ENGINEER MOHAN S. CHAR No. C057894 Exp. 6/30/10 CIVIL STATE OF CALIFORNIA

STAMP IS VALID FOR REVISION 1 & 2 ONLY

Note: The Contractor shall verify all controlling field dimensions before ordering or fabricating any material.

- ALL DIMENSIONS ARE IN METERS UNLESS OTHERWISE SHOWN

SAN FRANCISCO OAKLAND BAY BRIDGE
EAST SPAN SEISMIC SAFETY PROJECT

OAKLAND APPROACH STRUCTURES - PHASE I
EASTBOUND STRUCTURE PLAN NO. 1

DESIGN OVERSIGHT: SAM AKKAD, FRANCISCO CARPIO, BERNARD CHAM, HASAN EL-HATUR
SIGN OFF DATE: 3/11/09

	BY	CHECKED
DESIGN	M. CHAR	T. DUDLEY
DETAILS	N. MORCILLO/M. ANDRASEK	M. CHAR
QUANTITIES	N. MORCILLO/Y. KIM	V. SIVAKOLUNDU/T. DUDLEY

PREPARED FOR THE STATE OF CALIFORNIA DEPARTMENT OF TRANSPORTATION

MOHAN S. CHAR
PROJECT ENGINEER

BRIDGE NO. 34-0006L/R
KILOMETER POST 1.6

CU 04
EA 0120L1

DISREGARD PRINTS BEARING EARLIER REVISION DATES

SHEET B OF 224

Rev. Date: 3-18-08

ORIGINAL SCALE IN MILLIMETERS FOR REDUCED PLANS 0 10 20 30 40 50 60 70 80 90 100

FILE => U:\bridge\TYL10502\2003 CCOs\Drain Inlet CCO\04-0120L1-34-006-c-sp-east1_b.dgn

USERNAME => LAM DATE PLOTTED => 3/11/2009 TIME PLOTTED => 9:43:11 AM

DIST.	COUNTY	ROUTE	KILOMETER POST TOTAL PROJECT	SHEET NO.	TOTAL SHEETS
04	Ala	80	1.6/2.7	189R1	643

REGISTERED ENGINEER - CIVIL

1-29-07

PLANS APPROVAL DATE

The State of California or its officers or agents shall not be responsible for the accuracy or completeness of electronic copies of this plan sheet.

REGISTERED PROFESSIONAL ENGINEER MOHAN S. CHAR No. C057894 Exp. 6/30/08 CIVIL STATE OF CALIFORNIA

T.Y. LIN / MOFFATT & NICHOL
TWO HARRISON STREET, SUITE 500
SAN FRANCISCO, CA 94105

LIM & NASCIMENTO ENGINEERING CORPORATION
12 MAUCHLY, BLDG L
IRVINE, CA 92618

To get to the Caltrans web site, go to: http://www.dot.ca.gov

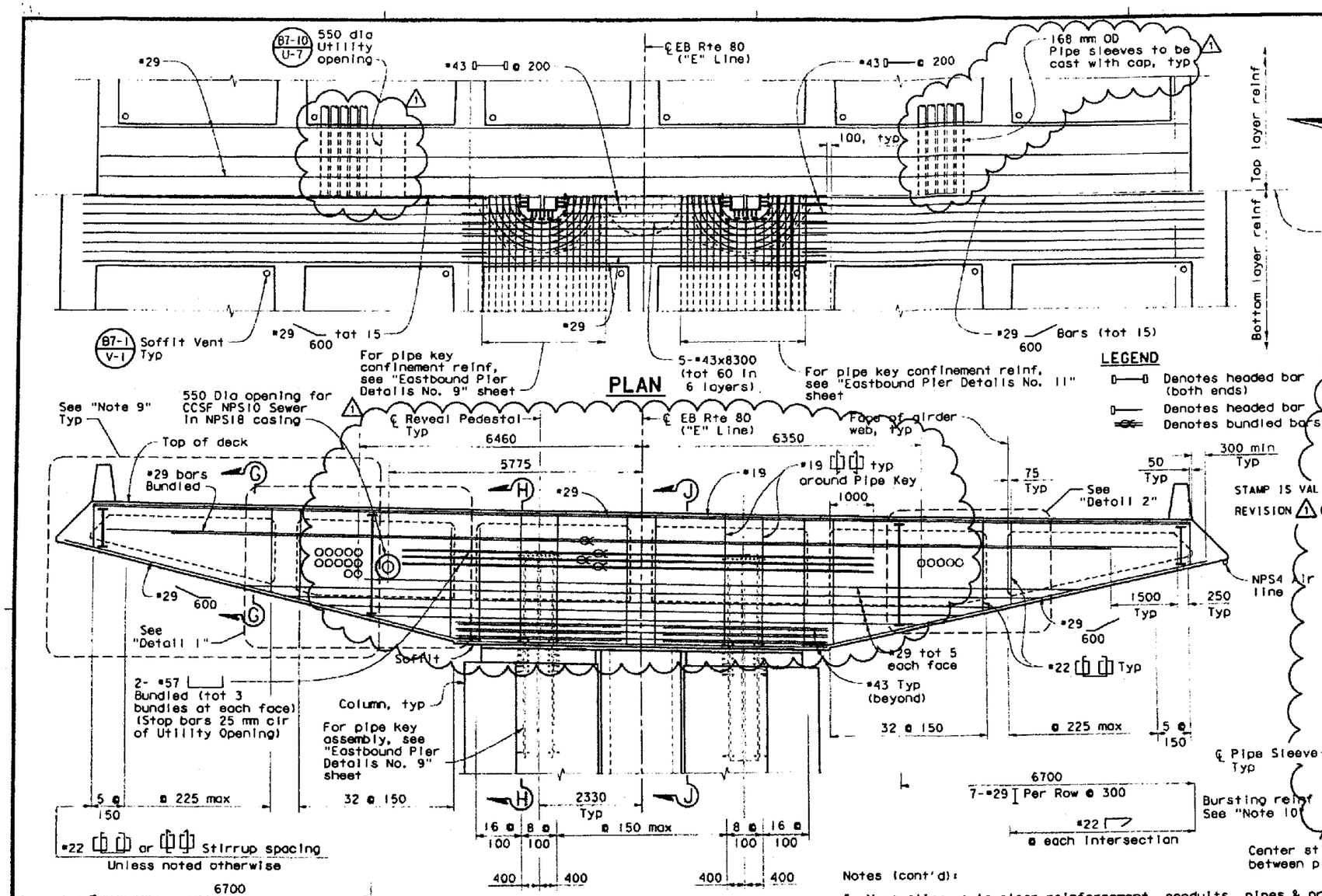

ELEVATION

PIER CAP BEAM - PIER E17R

1:50

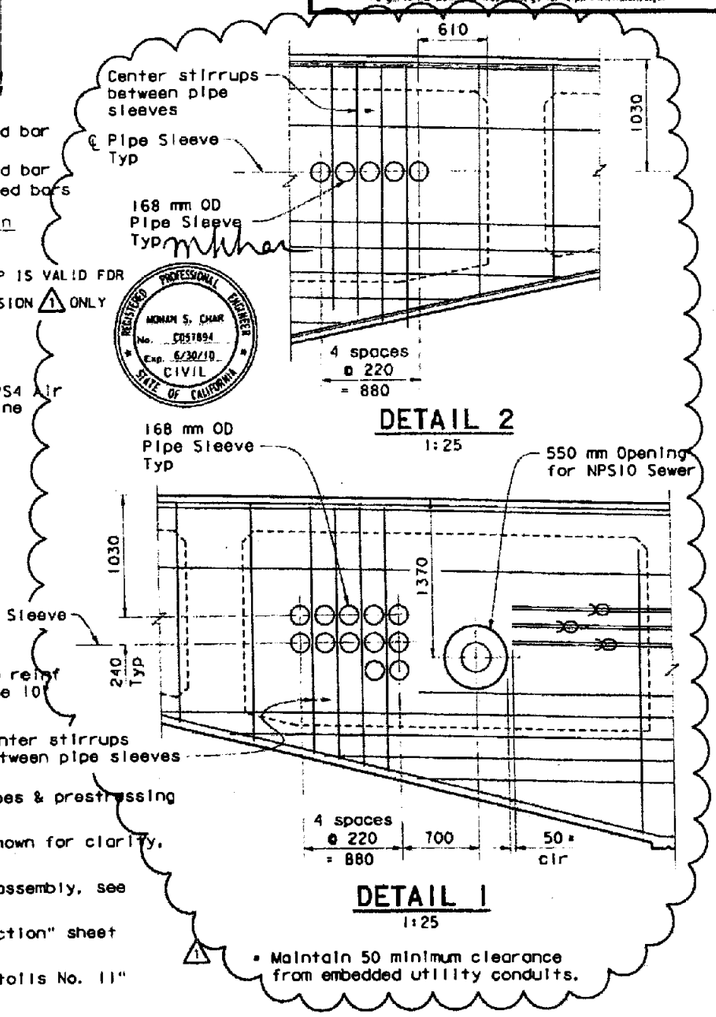

STAMP IS VALID FOR REVISION 1 ONLY

REGISTERED PROFESSIONAL ENGINEER MOHAN S. CHAR No. C057894 Exp. 6/30/10 CIVIL STATE OF CALIFORNIA

Notes:

1. Spacings & dimensions are measured along ℄ Pier.
2. For information not shown, see "Pier Elevations" sheets.
3. For Sections "G-G", "H-H" & "J-J" see "Eastbound Pier Details No. 5" sheet.
4. For Prestressing Path Layout, see "Eastbound Pier Details No. 8" sheet.

Notes (cont'd):

5. Move stirrups to clear reinforcement, conduits, pipes & prestressing ducts at each girder and around pipe key area.
6. Other reinforcement around pipe key assembly not shown for clarity, see "Eastbound Pier Details No. 9" sheet.
7. For pipe key confinement reinforcement & pipe key assembly, see "Eastbound Pier Details No. 9" sheet.
8. For utility information, see "Eastbound Typical Section" sheet and "Electrical Plans" or "Mechanical Plans".
9. For "Cap Beam End Details", see "Eastbound Pier Details No. 11" sheet, typical except Cap Beam Prestressing Ducts.
10. For bursting reinforcement layout, see "Eastbound Pier Details No. 11" sheet.

ALL DIMENSIONS ARE IN MILLIMETERS UNLESS OTHERWISE SHOWN

MARK	DATE	DESCRIPTION	BY	CH'D
1	3/9/09	ADJUST UTILITY LOCATIONS	MSC	TWD
		REVISION(S)		

CONTRACT CHANGE ORDER NO. 101
SHEET 3 OF 16

DESIGN OVERSIGHT: SAM ABRAO, FRANCISCO CARPIO, BERNARD CHAN, HASAN EC-NATUR
SIGN OFF DATE 3/11/09

	BY	CHECKED
DESIGN	M. CHAR	T. DUDLEY
DETAILS	N. MORCILLO/M. ANDRASEK	M. CHAR
QUANTITIES	N. MORCILLO/Y. KIM	V. SIVAKOLUNDU/T. DUDLEY

PREPARED FOR THE STATE OF CALIFORNIA DEPARTMENT OF TRANSPORTATION

MOHAN S. CHAR
PROJECT ENGINEER

BRIDGE NO. 34-0006L/R
KILOMETER POST 1.6

CU 04
EA 0120L1

SAN FRANCISCO OAKLAND BAY BRIDGE
EAST SPAN SEISMIC SAFETY PROJECT

OAKLAND APPROACH STRUCTURES - PHASE I

EASTBOUND PIER DETAILS NO. 4

DISREGARD PRINTS BEARING EARLIER REVISION DATES

SHEET 76 OF 224

Rev. Date: 5-18-98

ORIGINAL SCALE IN MILLIMETERS FOR REDUCED PLANS 0 10 20 30 40 50 60 70 80 90 100

DIST.	COUNTY	ROUTE	KILOMETER POST TOTAL PROJECT	SHEET NO.	TOTAL SHEETS
04	Ala	80	1.6/2.7	191A1	643

REGISTERED ENGINEER - CIVIL

1-29-07

PLANS APPROVAL DATE

The State of California or its officers or agents shall not be responsible for the accuracy or completeness of electronic copies of this plan sheet.

REGISTERED PROFESSIONAL ENGINEER MOHAN S. CHAR No. C057894 Exp. 6/30/08 CIVIL STATE OF CALIFORNIA

T.Y. LIN / MOFFATT & NICHOL
TWO HARRISON STREET, SUITE 500
SAN FRANCISCO, CA 94105

LIM & NASCIMENTO ENGINEERING CORPORATION
12 MAUCHLY, BLDG L
IRVINE, CA 92618

To get to the Caltrans web site, go to: http://www.dot.ca.gov

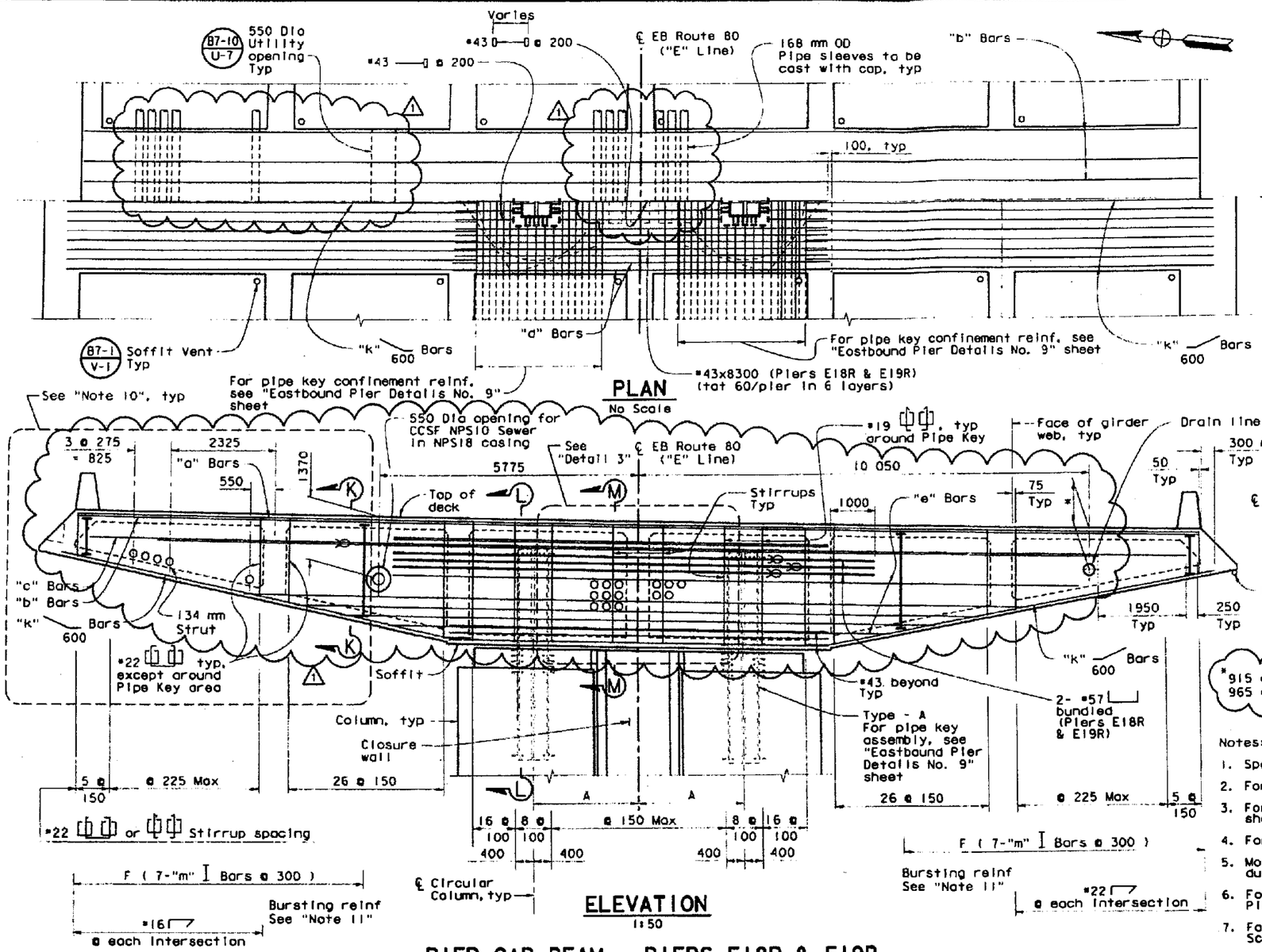

PIER CAP BEAM - PIERS E18R & E19R

Note: Pier E18R shown, Pier E19R similar

Notes:

1. Spacings & dimensions are measured along ℄ Pier.
2. For information not shown, see "Pier Elevations No. 1 thru 3" sheets.
3. For Sections "K-K", "L-L" & "M-M" see "Eastbound Pier Details No. 7" sheet.
4. For Prestressing Path Layout, see "Eastbound Pier Details No. 8" sheet.
5. Move stirrups to clear reinforcement, conduit, pipes & prestressing ducts at each girder and around pipe key area.
6. For additional reinforcement around pipe key assembly, see "Eastbound Pier Details No. 9" sheet.
7. For reinforcement designations and dimensions, see "Pier Cap Beam Schedule" on "Eastbound Pier Details No. 7" sheet.
8. For utility information, see "Eastbound Typical Section" sheet and "Electrical & Mechanical Plans".
9. Pipe sleeve layout shown for Pier E18R & E19R.
10. For "Cap Beam End Details", see "Eastbound Pier Details No. 11" sheet, Typical except Cap Beam Prestressing Ducts.
11. For bursting reinforcement layout, see "Eastbound Pier Details No. 11" sheet.

REGISTERED PROFESSIONAL ENGINEER MOHAN S. CHAR No. C057894 Exp. 6/30/10 CIVIL STATE OF CALIFORNIA

STAMP IS VALID FOR REVISION 1 ONLY

MARK	DATE	DESCRIPTION	BY	CH'D
1	3/9/09	ADJUST UTILITY LOCATIONS	MSC	TWD
		REVISION(S)		

CONTRACT CHANGE ORDER NO. 101
SHEET 4 OF 16

DIMENSION TABLE	
Location	A
Pier E18R	2331
Pier E19R	2331

LEGEND

- Denotes headed bar (both ends)
- Denotes headed bar
- Denotes bundled bars

ALL DIMENSIONS ARE IN MILLIMETERS UNLESS OTHERWISE SHOWN

SAN FRANCISCO OAKLAND BAY BRIDGE
EAST SPAN SEISMIC SAFETY PROJECT

OAKLAND APPROACH STRUCTURES - PHASE I

EASTBOUND PIER DETAILS NO. 6

DESIGN OVERSIGHT: SAM AKKAD, FRANCISCO CARPIO, BERNARD CHAN, HASAN EL-HATOUR
SIGN OFF DATE 3/11/09

	BY	CHECKED
DESIGN	M. CHAR	T. DUDLEY
DETAILS	N. MORCILLO/M. ANDRASEK	M. CHAR
QUANTITIES	N. MORCILLO/Y. KIM	V. SIVAKOLUNDU/T. DUDLEY

PREPARED FOR THE STATE OF CALIFORNIA DEPARTMENT OF TRANSPORTATION

MOHAN S. CHAR, PROJECT ENGINEER

CU 04
EA 0120L1

BRIDGE NO. 34-0006L/R
KILOMETER POST 1.6

DISREGARD PRINTS BEARING EARLIER REVISION DATES

REVISION DATES (PRELIMINARY STAGE ONLY)

SHEET 78 OF 224

Rev. Date: 5-18-98

ORIGINAL SCALE IN MILLIMETERS FOR REDUCED PLANS 0 10 20 30 40 50 60 70 80 90 100

DIST.	COUNTY	ROUTE	KILOMETER POST TOTAL PROJECT	SHEET NO.	TOTAL SHEETS
04	Ala	80	1.6/2.7	204R1	643

REGISTERED ENGINEER - CIVIL

1-29-07

PLANS APPROVAL DATE

MOHAN S. CHAR No. C057894 Exp. 6/30/08 CIVIL STATE OF CALIFORNIA REGISTERED PROFESSIONAL ENGINEER

The State of California or its officers or agents shall not be responsible for the accuracy or completeness of electronic copies of this plan sheet.

T.Y. LIN / MOFFATT & NICHOL
TWO HARRISON STREET, SUITE 500
SAN FRANCISCO, CA 94105

LIM & NASCIMENTO ENGINEERING CORPORATION
12 MAUCHLY, BLDG L
IRVINE, CA 92618

To get to the Caltrans web site, go to: http://www.dot.ca.gov

LEGEND

- Denotes regular reinforcement
- ∘ Denotes additional longitudinal reinforcement, see "Eastbound Deck Details No. 1" sheet. For additional girder stem reinf, see "Eastbound Girder Details" sheet
- * 60 mm Min and 100 mm Max Clr to stirrup (except 25 mm Min clear near anchorage)
- ** Distribution bars
- X Denotes bar spacing

MARK	DATE	DESCRIPTIONS	BY	CH'D
1	3/9/09	REVISED UTILITY OPENING SCHEDULE. LOCATIONS & NOTE 5	MSC	TWO

REVISION(S)

CONTRACT CHANGE ORDER NO. 101
SHEET 5 OF 16

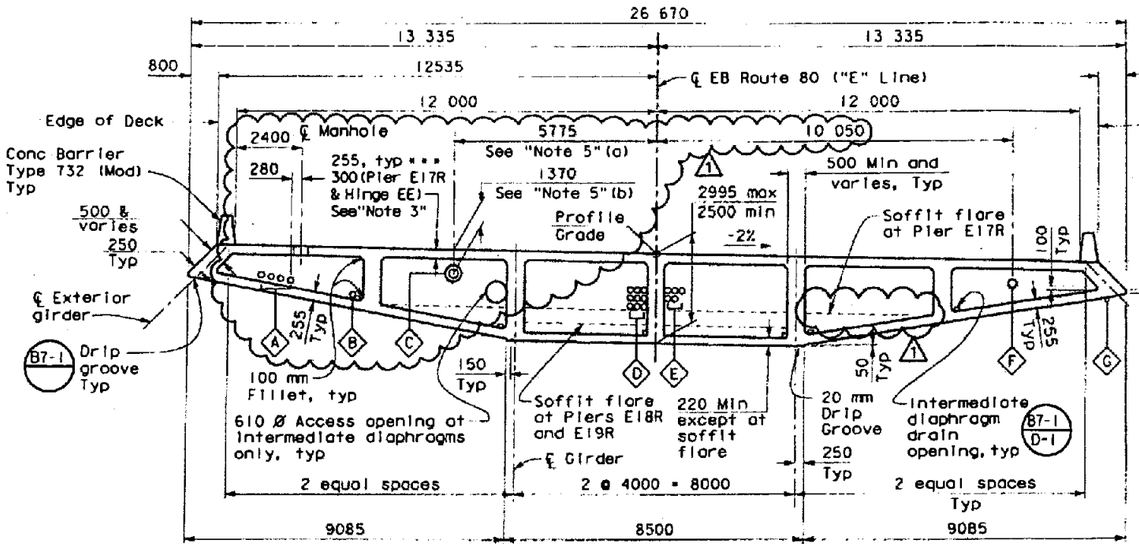

*** See "Eastbound Girder Layout No. 1" for transition of deck slab thickness

TYPICAL SECTION - HINGE EE TO HINGE FE

1:80

Note: Conduit Pattern Shown Near Pier E18R & E19R. For other locations, see "Eastbound Pier Details No. 4 & "Hinge EE Details No. 2 & 3" and "Eastbound Hinge FE Details No. 1" sheets.

UTILITY OPENING SCHEDULE

UTILITY DESCRIPTION	CONDUIT SIZE (mm)	CASING SIZE OD (mm)	PIER /DIAPHRAGM OPENING SIZE (mm)	HINGE OPENING SIZE (mm)
A Pipe sleeves for Electrical conduit #	5-103Ø (Hinge EE to Hinge FE & Pier E22R) 5- 103Ø & 3- 63Ø / 41Ø (Hinge FE to Pier E21R)	—	Cast-In-Place	Cast-In-Place
B Pipe sleeve for Electrical conduit #	1-103 Ø	—	Cast-In-Place	Cast-In-Place
C CCSF Sewer line #	NPS 10 (Sewer) in NPS 18 Casing	460 Ø	Pier & Diaph 550 Ø except Diaph C & D	550 Ø
D Pipe sleeves for conduit #	12-103Ø (Hinge EE to Pier E17R) 9-103Ø (Pier E18R to Pier E21R)	—	Cast-In-Place	Cast-In-Place
E Pipe sleeves for Electrical Conduit (12Kv) #	5-103 Ø	—	Cast-In-Place	Cast-In-Place
F Drain line	NPS 8 and NPS 10 ‡	—	250Ø and 300Ø ‡	None
G Air line	1-100 Ø	—	None	None

‡ - See "Eastbound Girder Layout No. 1" sheet for size and locations.
# - For conduit layout & details not shown, see "Electrical Plans".

STAMP IS VALID FOR REVISION 1 ONLY

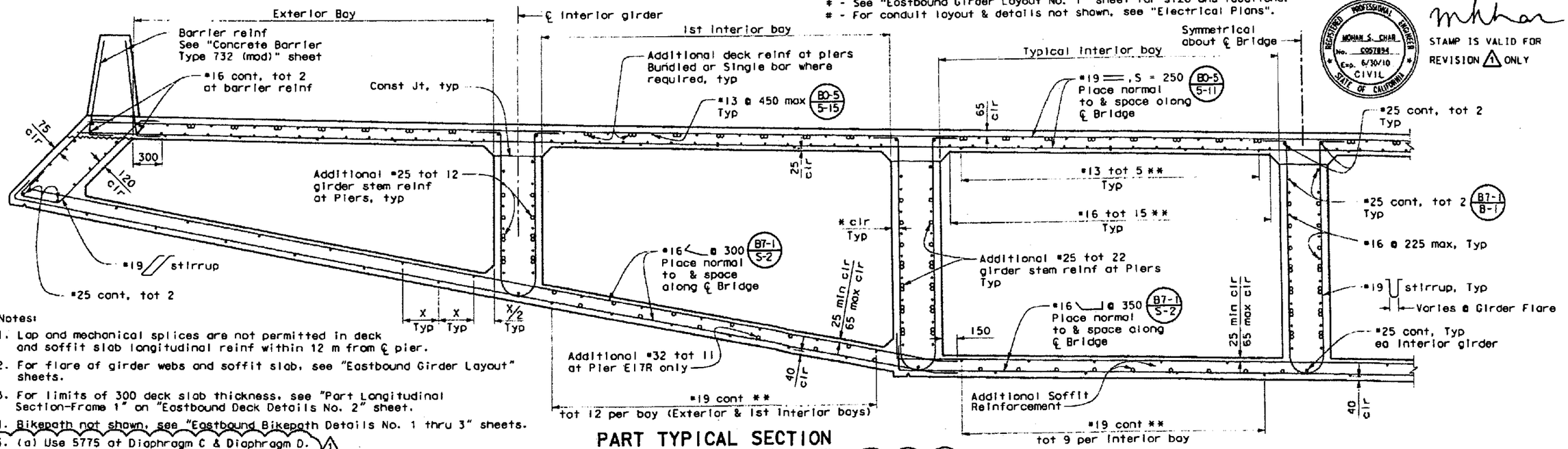

Notes:

1. Lap and mechanical splices are not permitted in deck and soffit slab longitudinal reinf within 12 m from ℄ pier.
2. For flare of girder webs and soffit slab, see "Eastbound Girder Layout" sheets.
3. For limits of 300 deck slab thickness, see "Part Longitudinal Section-Frame 1" on "Eastbound Deck Details No. 2" sheet.
4. Bikepath not shown, see "Eastbound Bikepath Details No. 1 thru 3" sheets.
5. (a) Use 5775 at Diaphragm C & Diaphragm D. (b) Use 1370 at Diaphragm C & Diaphragm D. 1
6. Anchorages and footholds at service platform not shown, see "SERVICE PLATFORMS - PLAN AND SECTIONS" sheet.

PART TYPICAL SECTION HINGE EE TO HINGE FE

1:20

B0-5 B7-1 B8-5

ALL DIMENSIONS ARE IN MILLIMETERS UNLESS OTHERWISE SHOWN

SAN FRANCISCO OAKLAND BAY BRIDGE
EAST SPAN SEISMIC SAFETY PROJECT

OAKLAND APPROACH STRUCTURES - PHASE I

EASTBOUND TYPICAL SECTION

DESIGN OVERSIGHT: SAM ARKAD, FRANCISCO CARPIO, BERNARD CHAN, HASAN EL-NATUR — SIGN OFF DATE 3/11/09

	BY	CHECKED
DESIGN	M. CHAR	T. DUDLEY
DETAILS	N. MORCILLO/M. ANDRASEK	M. CHAR
QUANTITIES	N. MORCILLO/Y. KIM	V. SIVAKOLUNDU/T. DUDLEY

PREPARED FOR THE STATE OF CALIFORNIA DEPARTMENT OF TRANSPORTATION

MOHAN S. CHAR, PROJECT ENGINEER

BRIDGE NO. 34-0006L/R
KILOMETER POST 1.6

CU 04
EA 0120L1

DISREGARD PRINTS BEARING EARLIER REVISION DATES

REVISION DATES (PRELIMINARY STAGE ONLY) — SHEET 91 OF 224

Rev. Date: 5-10-98

ORIGINAL SCALE IN MILLIMETERS FOR REDUCED PLANS 0 10 20 30 40 50 60 70 80 90 100

FILE => U:\BRIDGE\TYL10502\2009 CCOs\Hinge Details CCO\04-012011 14 006 K TYPSEC dcst.dgn

DATE PLOTTED => 30-Oct-2009 TIME PLOTTED => 4:29:34 PM USER NAME => LAN

DIST.	COUNTY	ROUTE	KILOMETER POST TOTAL PROJECT	SHEET NO.	TOTAL SHEETS
04	Ala	80	1.6/2.7	211R2	643

REGISTERED ENGINEER - CIVIL
1-29-07
PLANS APPROVAL DATE
The State of California or its officers or agents shall not be responsible for the accuracy or completeness of electronic copies of this plan sheet.

T.Y. LIN / MOFFATT & NICHOL
TWO HARRISON STREET, SUITE 500
SAN FRANCISCO, CA 94105

LIM & NASCIMENTO ENGINEERING CORPORATION
12 MAUCHLY, BLDG L
IRVINE, CA 92618

Notes:

1. For Deck prestressing details, see "Eastbound Deck Details No. 2" sheet.
2. For girders (A), (B), (K), & (L), see "Girder Layout Details No. 2" sheet.
3. Structure depth varies linearly from Hinge EE to Hinge FE.
4. Intermediate diaphragms to be placed radially. Dimensions shown are measured along ℄ EB Route 80.
5. For Utility information, see table on "Eastbound Typical Section" sheet.
6. (2) For Access Openings & Electrical Blockouts, see "Eastbound Girder Layout No. 1A" sheet.
7. For Prestressing Notes, see "Eastbound Girder Layout No. 2" sheet.
8. For electrical conduit layout details and Loop Detector details, see "Electrical Plans".
9. For mechanical layout and pipe support details, see "Mechanical Plans".
10. For Utilities designation, see "Eastbound Typical Section" sheet.
11. See "Service Platform Details".
12. (2) Girder opening locations are shown on "Eastbound Girder Layout No. 1A" sheet.
13. Preformed Loop Detector will be cast with the deck and pullbox will be provided as stated on Preformed Loop Schedule as shown on "Roadway Plans".
14. For Additional Hair Pin reinforcement around ducts, see "Detail 2" on "Eastbound Hinge EE Details No. 5" sheet.

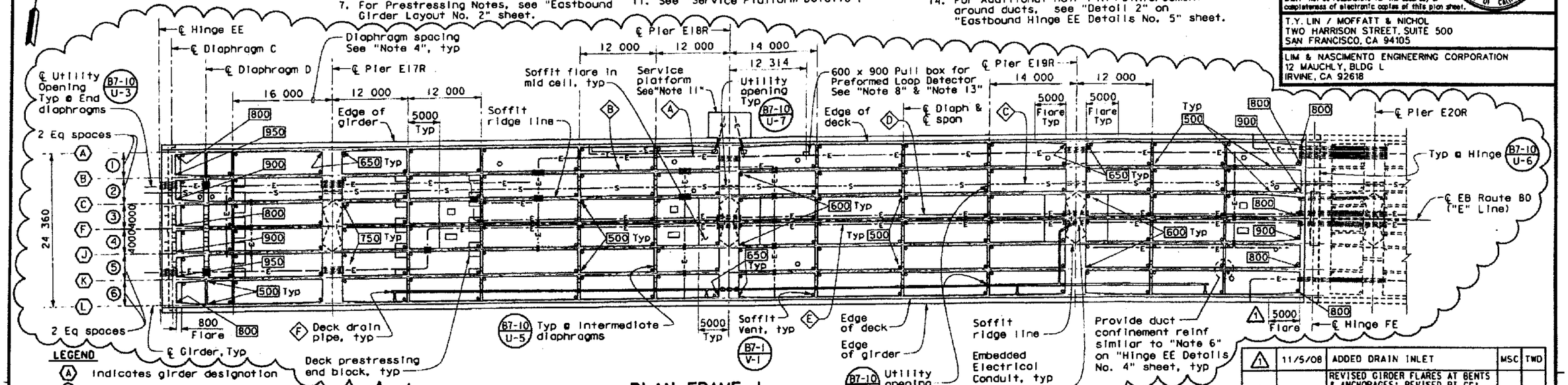

PLAN-FRAME 1

1:300

LEGEND

- (A) indicates girder designation
- (1) indicates bay designation
- (A) indicates utility designation
- ▭ indicates girder stem width in millimeters, see B7-1 S-3
- 0.5 L1 indicates fraction of each girder length in the span noted
- ▩ indicates embedded PVC rigid metallic conduit or pipe sleeves

Note:
Bikeway details not shown, see "Eastbound Bikepath Details No. 2" sheet.

MARK	DATE	DESCRIPTIONS	BY	CH'D
1	11/5/08	ADDED DRAIN INLET	MSC	TWD
2	3/9/09	REVISED GIRDER FLARES AT BENTS & ANCHORAGES; REVISED PT CG; ADDED ACCESS OPENINGS, UTILITY BLOCKOUTS & PIPE SLEEVES; MOVED DRAIN INLET; REVISED NOTE 6&12	MSC	TWD

REVISION(S)

CONTRACT CHANGE ORDER NO. 101
SHEET 6 OF 16

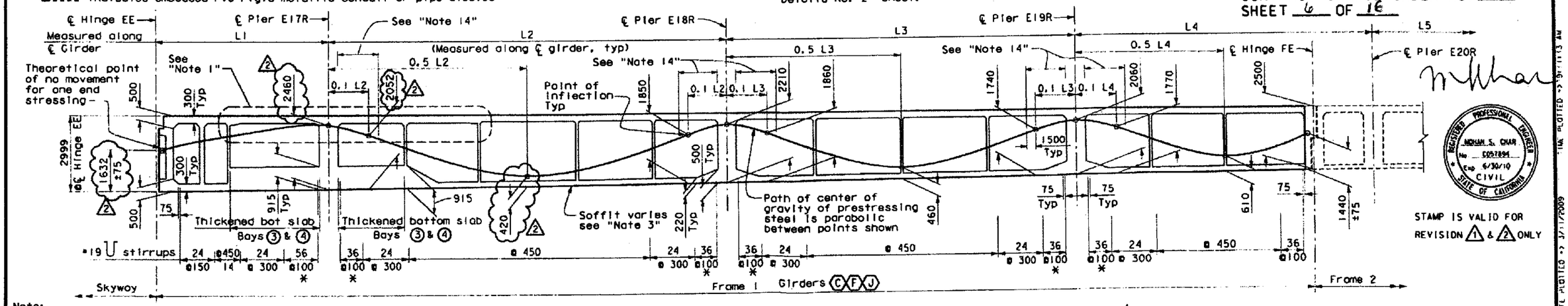

Note:
The Contractor shall verify all controlling field dimensions before ordering or fabricating any material.

* (2 Bundled)

LONGITUDINAL SECTION-FRAME 1

No Scale

ALL DIMENSIONS ARE IN MILLIMETERS UNLESS OTHERWISE SHOWN

STAMP IS VALID FOR REVISION (1) & (2) ONLY

DESIGN OVERSIGHT: SAM AKKAD, FRANCISCO CARPIO, BERNARD CHAN, HASAN EL-NATOR
SIGN OFF DATE: 3/11/09

	BY	CHECKED
DESIGN	M. CHAR	T. DUDLEY
DETAILS	N. MORCILLO/M. ANDRASEK	M. CHAR
QUANTITIES	N. MORCILLO/Y. KIM	Y. SIVAKOLUNDU/T. DUDLEY

PREPARED FOR THE STATE OF CALIFORNIA DEPARTMENT OF TRANSPORTATION

MOHAN S. CHAR
PROJECT ENGINEER

CU 04
EA 0120L1

BRIDGE NO. 34-0006L/R
KILOMETER POST 1.6

SAN FRANCISCO OAKLAND BAY BRIDGE
EAST SPAN SEISMIC SAFETY PROJECT

OAKLAND APPROACH STRUCTURES - PHASE 1

EASTBOUND GIRDER LAYOUT NO. 1

DISREGARD PRINTS BEARING EARLIER REVISION DATES

SHEET 98 OF 224

Rev. Date: 5-18-06

ORIGINAL SCALE IN MILLIMETERS FOR REDUCED PLANS 0 10 20 30 40 50 60 70 80 90 100

FILE => U:\bridge\TYL10502\2009 CCOs\Deck access CCO\04-012011-34-006-1-xglr-lo-east-r2b.dgn

DIST.	COUNTY	ROUTE	KILOMETER POST TOTAL PROJECT	SHEET NO.	TOTAL SHEETS
04	Ala	80	1.6/2.7	211S1R1	643

Caltrans Metric

REGISTERED ENGINEER - CIVIL
3-9-09
PLANS APPROVAL DATE
The State of California or its officers or agents shall not be responsible for the accuracy or completeness of electronic copies of this plan sheet.

REGISTERED PROFESSIONAL ENGINEER MOHAN S. CHAR No. C057894 Exp. 6/30/10 CIVIL STATE OF CALIFORNIA

T.Y. LIN / MOFFATT & NICHOL
TWO HARRISON STREET, SUITE 500
SAN FRANCISCO, CA 94105

LIM & NASCIMENTO ENGINEERING CORPORATION
20 EMPIRE DRIVE
LAKE FOREST, CA 92630

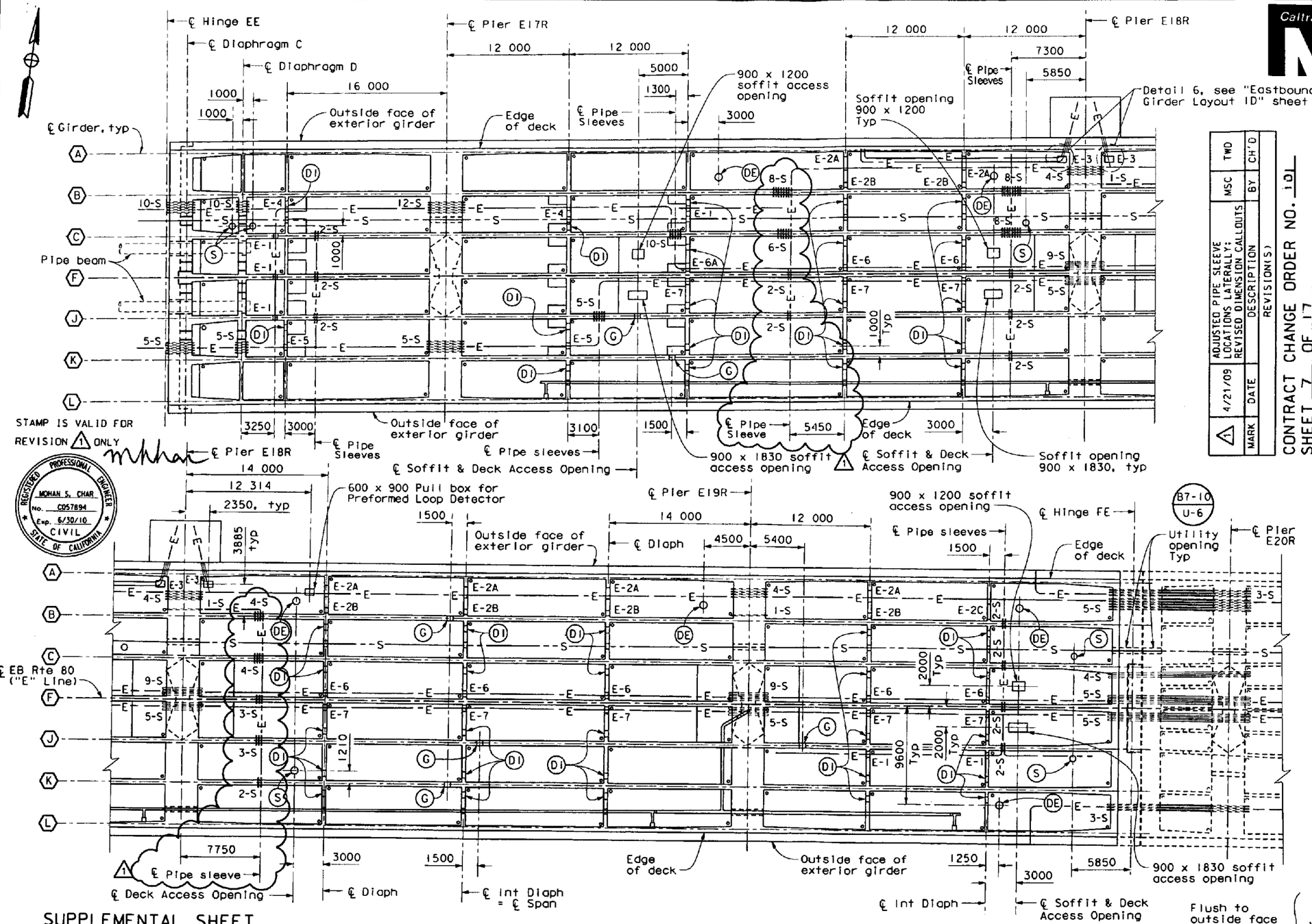

STAMP IS VALID FOR REVISION 1 ONLY

MARK	DATE	DESCRIPTION	BY	CH'D
1	4/21/09	ADJUSTED PIPE SLEEVE LOCATIONS LATERALLY; REVISED DIMENSION CALLOUTS	MSC	TWD

REVISION(S)

CONTRACT CHANGE ORDER NO. 101
SHEET 7 OF 17

LEGEND

- (A) Indicates girder designation
- (DI) Indicates 600 mm Ø diaphragm access opening (B7-10 / U-5)
- (G) Indicates 600 mm Ø girder access opening (B7-11 / U-41)
- (S) Indicates 610 mm Ø grated soffit access opening
- (DE) Indicates 600 mm Ø deck access opening (B7-11 / U-43)
- E-# Indicates Blockout opening type
- # -S # of Pipe sleeves Rigid PVC Sch 80

BLOCKOUT TYPE	BLOCKOUT SIZE	
E-1	500 ⊠ 200	
E-2A	1100 ⊠ 200	E-2B: 500 ⊠ 200
E-2C	1500 ⊠ 200	
E-3	900 ⊠ 500 Soffit Blockout	
E-4	1200 ⊠ 800	
E-5	1200 ⊠ 200	
E-6	800 ⊠ 800	E-6A: 800 ⊠ 1100
E-7	800 ⊠ 500	
▥	168 mm OD Rigid PVC Sch 80*	

* Exception:
At Hinge FE, 171 mm OD embedded metallic pipe sleeves for 103 mm RGS conduit will be installed and 91 mm OD for 41 mm RGS conduit.

SUPPLEMENTAL SHEET
CONTRACT CHANGE ORDER NO. 101
SHEET 7 OF 16

ACCESS OPENINGS & ELECTRICAL BLOCKOUTS
PLAN - FRAME 1
1:200

Note: The Contractor shall verify all controlling field dimensions before ordering or fabricating any material.

ALL DIMENSIONS ARE IN MILLIMETERS UNLESS OTHERWISE SHOWN

SIGN OVERSIGHT: SAM AKKAD, FRANCISCO CARPIO, BERNARD CHAN, HASAN EL-NATUR
SIGN OFF DATE: 4/29/09

	BY	CHECKED
DESIGN	M. CHAR	T. DUDLEY
DETAILS	M. ANDRASEK	M. CHAR
QUANTITIES	N. MORCILLO/Y. KIM	V. SIVAKOLUNDU/T. DUDLEY

PREPARED FOR THE STATE OF CALIFORNIA DEPARTMENT OF TRANSPORTATION

MOHAN S. CHAR, PROJECT ENGINEER

BRIDGE NO. 34-0006L/R
KILOMETER POST 1.6

CU 04
EA 0120L1

DISREGARD PRINTS BEARING EARLIER REVISION DATES 3/9/09

SAN FRANCISCO OAKLAND BAY BRIDGE
EAST SPAN SEISMIC SAFETY PROJECT
OAKLAND APPROACH STRUCTURES - PHASE I
EASTBOUND GIRDER LAYOUT NO. 1A

SHEET 98S1 OF 224

Rev. Date: 5-16-98

ORIGINAL SCALE IN MILLIMETERS FOR REDUCED PLANS 0 10 20 30 40 50 60 70 80 90 100

FILE -> u:\BRIDGE\TYL10502\2009 CCOs\Deck access CCO\04-012011-34-006-1-xglr-lo-eastlsr1.dgn

USERNAME -> LAN DATE PLOTTED -> 4/23/2009 TIME PLOTTED -> 2:30:54 PM

SUPPLEMENTAL SHEET
CONTRACT CHANGE ORDER NO. ____
SHEET ____ OF ____

STAMP IS VALID FOR REVISION 1 ONLY

MARK	DATE	DESCRIPTION	BY	CH'D
1	4/21/09	ADJUSTED PIPE SLEEVE LOCATIONS LATERALLY; MOVED DIMENSION CALLOUTS	MSC	TWD

REVISION(S)

CONTRACT CHANGE ORDER NO. 101
SHEET 8 OF 16

REGISTERED PROFESSIONAL ENGINEER MOHAN S. CHAR No. C057894 Exp. 6/30/10 CIVIL STATE OF CALIFORNIA

Notes:

1. Locations of LOL of top and bottom prestressing ducts as shown are approximate. Contractor shall field verify.
2. Adjust vertical location of the pipe sleeves in the field to avoid conflict with prestressing ducts as approved by the Engineer.
3. For reinforcement around pipe sleeves, blockout and girder access openings, see "Eastbound Girder Layout No. 1D" supplemental sheet.

LEGEND

#-S	Indicates # of Pipe Sleeves or Rigid PVC Sch 80
E-1	Indicates 400 mm x 200 mm Blockout opening
(G)	Indicates 600 mm Ø girder access opening (B7-11 / U-41)

Caltrans Metric

DIST.	COUNTY	ROUTE	KILOMETER POST TOTAL PROJECT	SHEET NO.	TOTAL SHEETS
04	Ala	80	1.6/2.7	211S2R1	643

REGISTERED ENGINEER - CIVIL
3-9-09
PLANS APPROVAL DATE

The State of California or its officers or agents shall not be responsible for the accuracy or completeness of electronic copies of this plan sheet.

T.Y. LIN / MOFFATT & NICHOL
TWO HARRISON STREET, SUITE 500
SAN FRANCISCO, CA 94105

LIM & NASCIMENTO ENGINEERING CORPORATION
20 EMPIRE DRIVE
LAKE FOREST, CA 92630

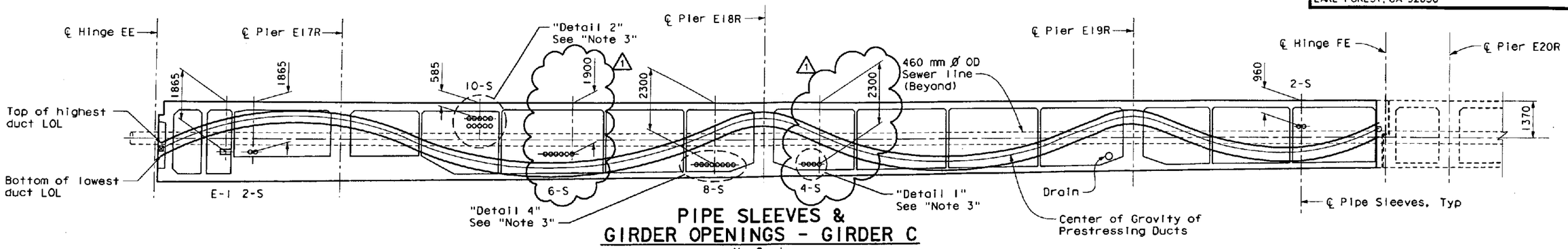

PIPE SLEEVES & GIRDER OPENINGS - GIRDER C
No Scale

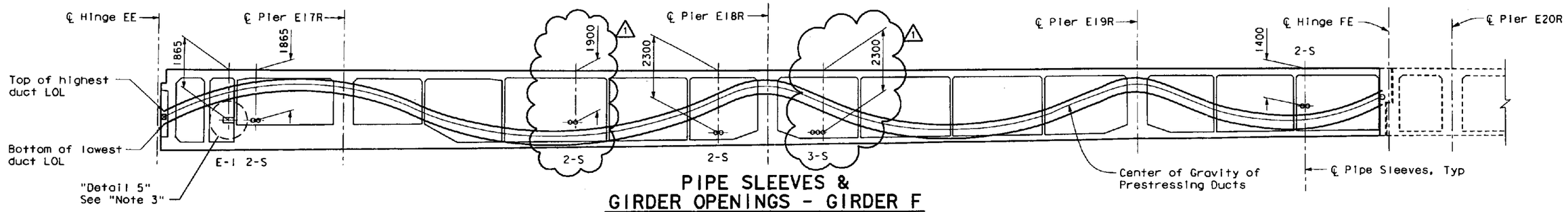

PIPE SLEEVES & GIRDER OPENINGS - GIRDER F
No Scale

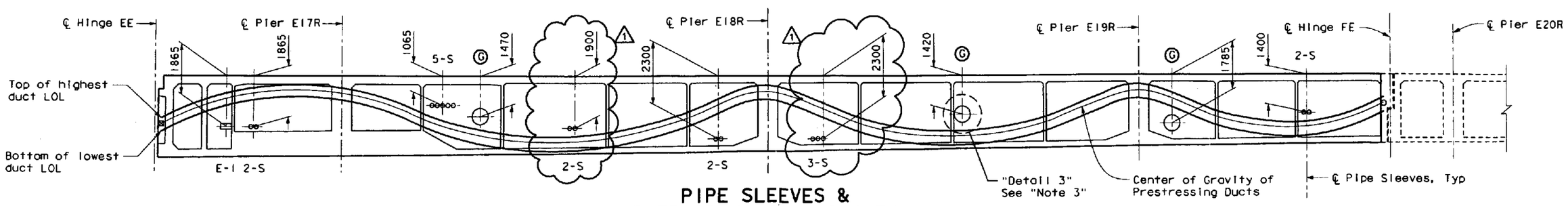

PIPE SLEEVES & GIRDER OPENINGS - GIRDER J
No Scale

Note: The Contractor shall verify all controlling field dimensions before ordering or fabricating any material.

ALL DIMENSIONS ARE IN MILLIMETERS UNLESS OTHERWISE SHOWN

SIGN OVERSIGHT
SAM AKKAD FRANCISCO CARPIO BERNARD CHAN HASAN EL-NATUR
SIGN OFF DATE 4/29/09

	BY	CHECKED
DESIGN	M. CHAR	T. DUDLEY
DETAILS	M. ANDRASEK	M. CHAR
QUANTITIES	N. MORCILLO/Y. KIM	V. SIVAKOLUNDU/T. DUDLEY

PREPARED FOR THE STATE OF CALIFORNIA DEPARTMENT OF TRANSPORTATION

MOHAN S. CHAR
PROJECT ENGINEER

BRIDGE NO. 34-0006L/R
KILOMETER POST 1.6

SAN FRANCISCO OAKLAND BAY BRIDGE
EAST SPAN SEISMIC SAFETY PROJECT
OAKLAND APPROACH STRUCTURES - PHASE I
EASTBOUND GIRDER LAYOUT NO. 1B

CU 04
EA 0120L1

DISREGARD PRINTS BEARING EARLIER REVISION DATES 3/9/09

SHEET 98S2 OF 224

Rev. Date: 5-18-98

ORIGINAL SCALE IN MILLIMETERS FOR REDUCED PLANS 0 10 20 30 40 50 60 70 80 90 100

FILE => U:\BRIDGE\TYL10502\2009 CCOs\Girder CCO\04-0120L1-34-006-1-xglr-1o-eastlos2r1.dgn

DATE PLOTTED => 4/23/2009 TIME PLOTTED => 12:03:57 PM USERNAME => LAN

DIST.	COUNTY	ROUTE	KILOMETER POST TOTAL PROJECT	SHEET NO.	TOTAL SHEETS
04	Ala	80	1.6/2.7	211S3R1	643

REGISTERED ENGINEER - CIVIL

3-9-09

PLANS APPROVAL DATE

The State of California or its officers or agents shall not be responsible for the accuracy or completeness of electronic copies of this plan sheet.

REGISTERED PROFESSIONAL ENGINEER MOHAN S. CHAR No. C057894 Exp. 6/30/10 CIVIL STATE OF CALIFORNIA

T.Y. LIN / MOFFATT & NICHOL
TWO HARRISON STREET, SUITE 500
SAN FRANCISCO, CA 94105

LIM & NASCIMENTO ENGINEERING CORPORATION
20 EMPIRE DRIVE
LAKE FOREST, CA 92630

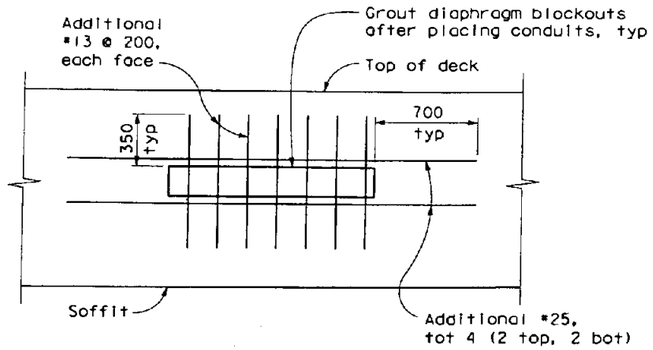

Note: For blockouts wider than 1000 mm only.

DIAPHRAGM ELECTRICAL BLOCKOUT DETAIL

No Scale

Notes:

1. Locations of LOL of top and bottom prestressing ducts as shown are approximate. Contractor shall field verify.
2. Adjust vertical location of the pipe sleeves in the field to avoid conflict with prestressing ducts as approved by the Engineer.
3. For reinforcement around pipe sleeves, blockout and girder access openings, see "Eastbound Girder Layout No. 1D" supplemental sheet.

LEGEND

#-S Indicates # of Pipe Sleeves or Rigid PVC Sch 80

Ⓖ Indicates 600 mm Ø girder access opening (B7-11 / U-41)

REGISTERED PROFESSIONAL ENGINEER MOHAN S. CHAR No. C057894 Exp. 6/30/10 CIVIL STATE OF CALIFORNIA

STAMP IS VALID FOR REVISION 1 ONLY

MARK	DATE	DESCRIPTION	BY	CH'D
1	4/21/09	ADJUSTED PIPE SLEEVE LOCATIONS LATERALLY; MOVED DIMENSION CALLOUTS	MSC	TWD

REVISION(S)

CONTRACT CHANGE ORDER NO. 101
SHEET 9 OF 16

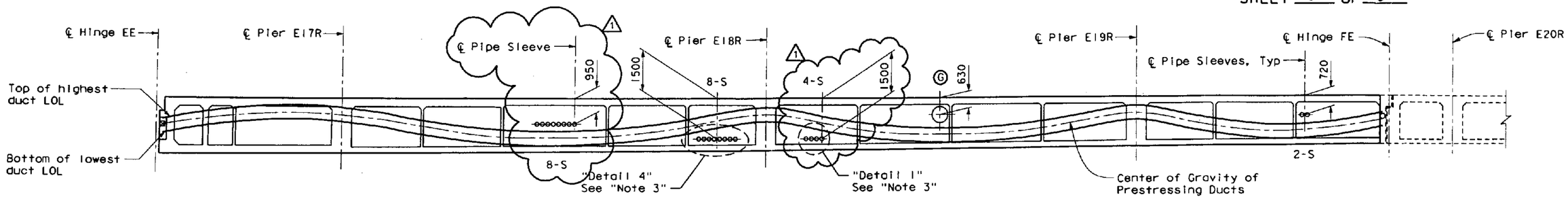

PIPE SLEEVES & GIRDER OPENINGS - GIRDER B

No Scale

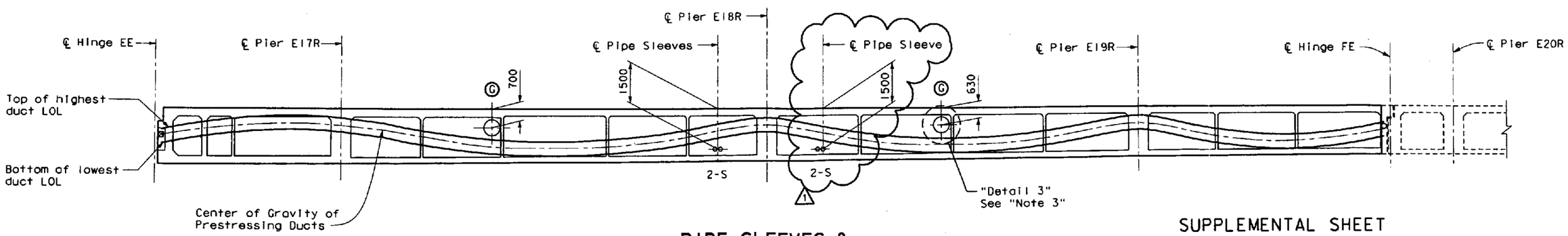

PIPE SLEEVES & GIRDER OPENINGS - GIRDER K

No Scale

SUPPLEMENTAL SHEET
CONTRACT CHANGE ORDER NO. 101
SHEET ___ OF ___

Note: The Contractor shall verify all controlling field dimensions before ordering or fabricating any material.

ALL DIMENSIONS ARE IN MILLIMETERS UNLESS OTHERWISE SHOWN

SIGN OVERSIGHT: SAM AKRAD, FRANCISCO CARPIO, BERNARD CHAN, HASAN EL-NATUR

SIGN OFF DATE: 4/29/09

	BY	CHECKED
DESIGN	M. CHAR	T. DUDLEY
DETAILS	M. ANDRASEK	M. CHAR
QUANTITIES	N. MORCILLO/Y. KIM	V. SIVAKOLUNDU/T. DUDLEY

PREPARED FOR THE STATE OF CALIFORNIA DEPARTMENT OF TRANSPORTATION

MOHAN S. CHAR
PROJECT ENGINEER

BRIDGE NO. 34-0006L/R
KILOMETER POST 1.6

SAN FRANCISCO OAKLAND BAY BRIDGE
EAST SPAN SEISMIC SAFETY PROJECT

OAKLAND APPROACH STRUCTURES - PHASE I

EASTBOUND GIRDER LAYOUT NO. 1C

CU 04
EA 0120L1

Rev. Date: 5-15-98

ORIGINAL SCALE IN MILLIMETERS FOR REDUCED PLANS 0 10 20 30 40 50 60 70 80 90 100

DISREGARD PRINTS BEARING EARLIER REVISION DATES 3/9/09

REVISION DATES (PRELIMINARY STAGE ONLY)

SHEET 98S3 OF 224

FILE => U:\BRIDGE\TYL10502\2009 CCOs\Girder CCO\04-012011-34-006-1-xgir-to-eastlas3r1.dgn

USERNAME => LAN DATE PLOTTED => 4/23/2009 TIME PLOTTED => 12:05:33 PM

DIST.	COUNTY	ROUTE	KILOMETER POST TOTAL PROJECT	SHEET NO.	TOTAL SHEETS
04	Ala	80	1.6/2.7	21154	643

REGISTERED ENGINEER - CIVIL

3-9-09

PLANS APPROVAL DATE

The State of California or its officers or agents shall not be responsible for the accuracy or completeness of electronic copies of this plan sheet.

T.Y. LIN / MOFFATT & NICHOL
TWO HARRISON STREET, SUITE 500
SAN FRANCISCO, CA 94105

LIN & NASCIMENTO ENGINEERING CORPORATION
20 EMPIRE DRIVE
LAKE FOREST, CA 92630

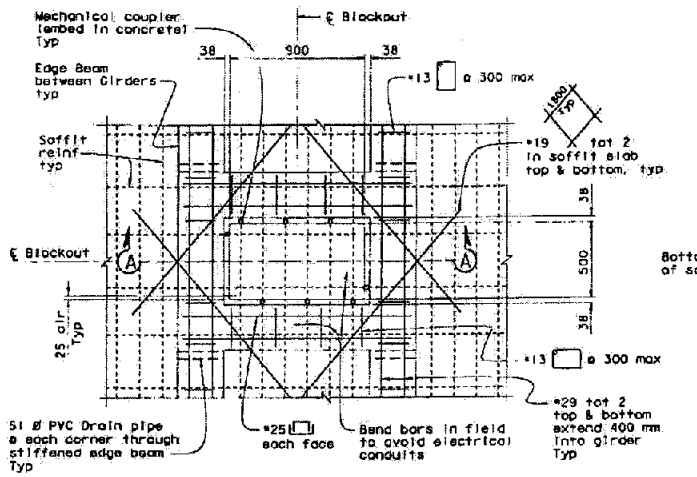

DETAIL 6
1:15

Note: Electrical conduits not shown for clarity.

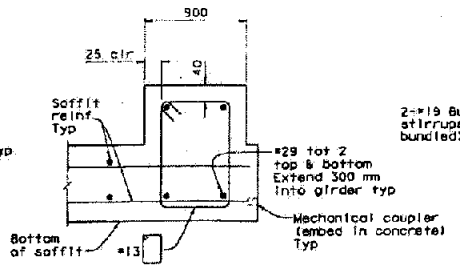

DETAIL 7
No Scale

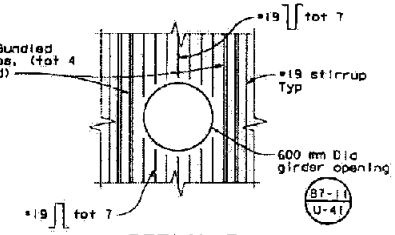

DETAIL 3
1:20

Note: For reinforcement not shown, see B7-11 U-41

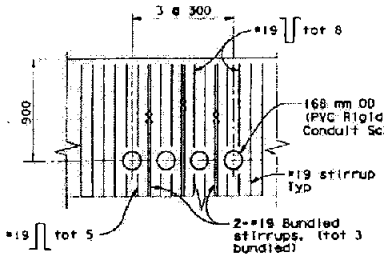

DETAIL 1
1:20

Note: Detail similar for 2, 3 & 5 pipe sleeves.

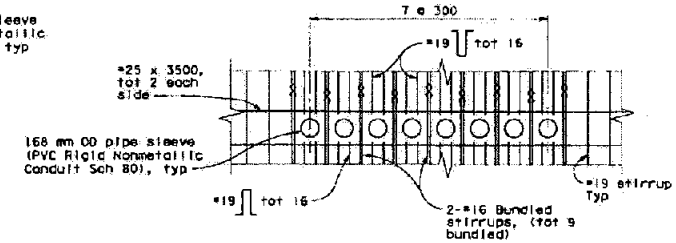

DETAIL 4
1:20

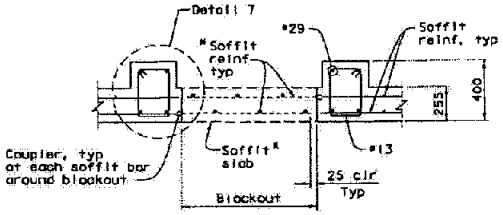

SECTION A-A
1:15

*To be placed after electrical conduits are installed.

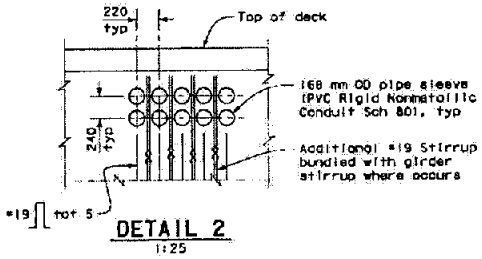

DETAIL 2
1:25

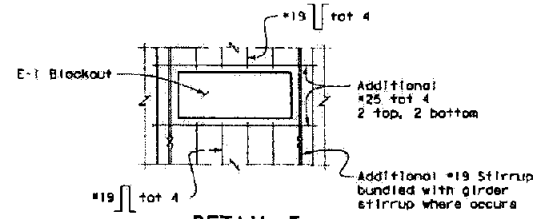

DETAIL 5
1:10

SUPPLEMENTAL SHEET
CONTRACT CHANGE ORDER NO. 101
SHEET 10 OF 16

Note: The Contractor shall verify all controlling field dimensions before ordering or fabricating any material.

ALL DIMENSIONS ARE IN MILLIMETERS UNLESS OTHERWISE SHOWN

DESIGN OVERSIGHT: SAN FRANCISCO CAMPUS — BERNARD CHAN — 6/11/09
SIGN OFF DATE

DESIGN	M. CHAN	T. DUDLEY
DETAILS	M. ANDRASEK	M. CHAN
QUANTITIES	R. MORCILLO/Y. KIM	Y. SIVAKOLUNDU/T. DUDLEY

PREPARED FOR THE STATE OF CALIFORNIA DEPARTMENT OF TRANSPORTATION

MOHAN S. CHAN, PROJECT ENGINEER

ORIGINAL SCALE IN MILLIMETERS FOR REDUCED PLANS 0 10 20 30 40 50 60 70 80 90 100

CU 04
EA 0120L1

SAN FRANCISCO OAKLAND BAY BRIDGE
EAST SPAN SEISMIC SAFETY PROJECT

OAKLAND APPROACH STRUCTURES - PHASE I

EASTBOUND GIRDER LAYOUT NO. 1D

SHEET 9854 OF 224

Mar 11, 2009

PRESTRESSING NOTES

1860 MPa Low Relaxation Strand
Pjack = See "Pjack Table"
K = 0.0007/m, μ = 0.20/rad (Girders)

Anchor Set = 10 mm
Total number of girders = 7

Concrete f'c @ 28 days = 45 MPa
Concrete f'ci @ time of stressing = 43 MPa*

Contractor shall submit elongation calculations based on initial stress at ⊠ = See "Pjack TABLE"

Distribution of final prestress force (Pjack) shall be based on the table shown. Maximum final girder and deck slab force variation from the designated force shall not exceed 3200 kN.

One end stressing shall be performed from Hinge FE for girders, and right end for deck slab.

* f'ci can be reduced to 38 MPa if rebar spiral in local anchor area provided is longer than the minimum length recommended by manufacturer. The Contractor shall submit calculations to the Engineer for approval before construction.

STAMP IS VALID FOR REVISION 1 & 2 ONLY

REGISTERED PROFESSIONAL ENGINEER MOHAN S. CHAR No. C057894 Exp. 6/30/10 CIVIL STATE OF CALIFORNIA

Pjack TABLE		
Girder Designation	Pjack/ Girder	Initial Force Coefficient @ ⊠
Ⓐ & Ⓛ	9450 kN	0.880
Ⓑ & Ⓚ	43 400 kN	0.776
ⒸⒻ & Ⓙ	36 170 kN	0.675

MARK	DATE	DESCRIPTIONS	BY	CH'D
1	1/21/09	REVISE Pjack & PRESTRESSING PATH CG VALUES	MSC	TWD
2	3/9/09	STIRRUP SIZE REVISED	MSC	TWD

REVISION(S)

CONTRACT CHANGE ORDER NO. 101
SHEET 11 OF 16

Notes:
1. Structure depth varies linearly from Hinge EE to Hinge FE.
2. For Deck slab prestressing details, see "Eastbound Deck Details No. 3" sheet.
3. For intermediate Diaphragm, see "Eastbound Deck Details No. 4" sheet.
4. For "Camber Diagram", see "Eastbound Camber Diagrams" sheet.
5. For additional Hair Pin reinforcement around ducts, see "Detail 2" on "Eastbound Hinge EE Details No. 5" sheet.

LEGEND
Ⓐ indicates girder designation
0.5 L2 indicates fraction of each girder length in the span noted

Caltrans Metric

DIST.	COUNTY	ROUTE	KILOMETER POST TOTAL PROJECT	SHEET NO.	TOTAL SHEETS
04	Ala	80	1.6/2.7	212R2	643

REGISTERED ENGINEER - CIVIL
1-29-07
PLANS APPROVAL DATE
REGISTERED PROFESSIONAL ENGINEER MOHAN S. CHAR No. C057894 Exp. 6/30/08 CIVIL STATE OF CALIFORNIA
The State of California or its officers or agents shall not be responsible for the accuracy or completeness of electronic copies of this plan sheet.

T.Y. LIN / MOFFATT & NICHOL
TWO HARRISON STREET, SUITE 500
SAN FRANCISCO, CA 94105

LIM & NASCIMENTO ENGINEERING CORPORATION
12 MAUCHLY, BLDG L
IRVINE, CA 92618

To get to the Caltrans web site, go to: http://www.dot.ca.gov

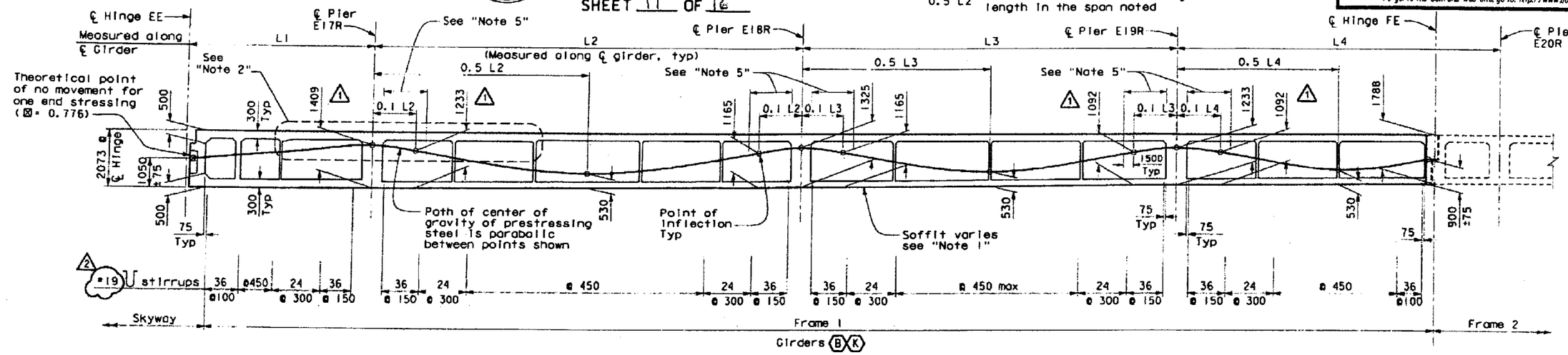

LONGITUDINAL SECTION-FRAME 1

No Scale

Note:
For Prestress Anchorage clearances at Girders Ⓑ & Ⓚ see "Eastbound Girder Details" sheet.

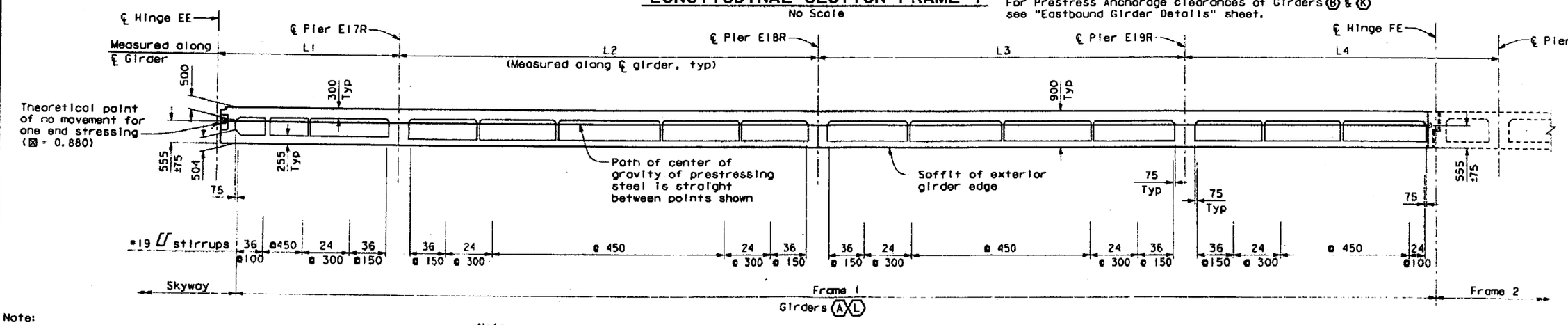

LONGITUDINAL SECTION-FRAME 1

No Scale

Note:
The Contractor shall verify all controlling field dimensions before ordering or fabricating any material.

Note:
Bikeway intermediate diaphragms not shown

ALL DIMENSIONS ARE IN MILLIMETERS UNLESS OTHERWISE SHOWN

DESIGN OVERSIGHT
SAM AKKAD FRANCISCO CAMPILO BERNARD CHAN HASAN EL-HATUR
SIGN OFF DATE 3/11/09

	BY	CHECKED
DESIGN	M. CHAR	T. DUDLEY
DETAILS	N. MORCILLO/M. ANDRASEK	M. CHAR
QUANTITIES	N. MORCILLO/Y. KIM	V. SIVAKOLUNDU/T. DUDLEY

PREPARED FOR THE STATE OF CALIFORNIA DEPARTMENT OF TRANSPORTATION

MOHAN S. CHAR
PROJECT ENGINEER

BRIDGE NO. 34-0006L/R
KILOMETER POST 1.6

CU 04
EA 0120L1

DISREGARD PRINTS BEARING EARLIER REVISION DATES

SAN FRANCISCO OAKLAND BAY BRIDGE
EAST SPAN SEISMIC SAFETY PROJECT

OAKLAND APPROACH STRUCTURES - PHASE 1

EASTBOUND GIRDER LAYOUT NO. 2

ORIGINAL SCALE IN MILLIMETERS FOR REDUCED PLANS 0 10 20 30 40 50 60 70 80 90 100

Rev. Date 5-18-98

REV'S ON 34/75 (PRELIMINARY STAGE ONLY)

| | | |

DIST.	COUNTY	ROUTE	KILOMETER POST TOTAL PROJECT	SHEET NO.	TOTAL SHEETS
04	Ala	80	1.6/2.7	239R2	643

REGISTERED ENGINEER - CIVIL

1-29-07
PLANS APPROVAL DATE

The State of California or its officers or agents shall not be responsible for the accuracy or completeness of electronic copies of this plan sheet.

REGISTERED PROFESSIONAL ENGINEER MOHAN S. CHAR No. C057894 Exp. 6/30/09 CIVIL STATE OF CALIFORNIA

T.Y. LIN / MOFFATT & NICHOL
TWO HARRISON STREET, SUITE 500
SAN FRANCISCO, CA 94105

LIM & NASCIMENTO ENGINEERING CORPORATION
12 MAUCHLY, BLDG L
IRVINE, CA 92618

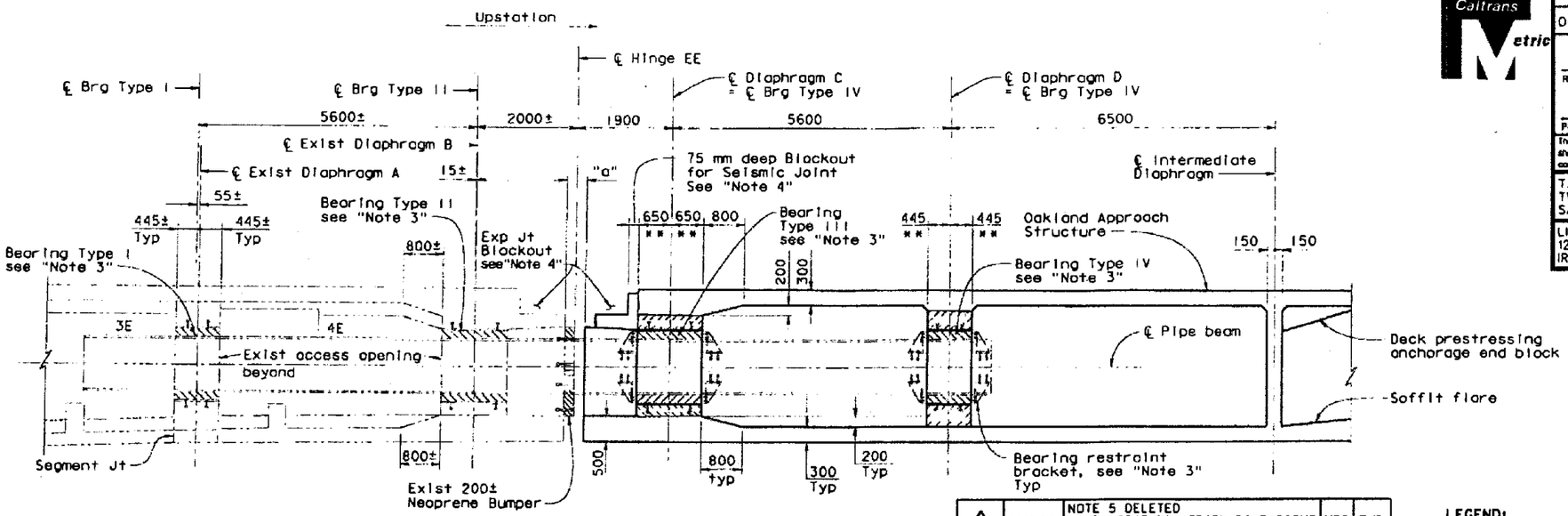

SECTION A-A

1:50

MARK	DATE	DESCRIPTIONS	BY	CH'D
1	7/31/08	NOTE 5 DELETED CONTRACTOR TO VERIFY DIMENSIONS IN FIELD NOTE ADDED	MSC	TWD
2	3/9/09	SEWER LINE RELOCATED TO MATCH SKYWAY ADJUSTED PIPE SLEEVE LOCATIONS LEGEND NOTE DELETED	MSC	TWD

REVISION(S)

CONTRACT CHANGE ORDER NO. 101
SHEET 12 OF 16

REGISTERED PROFESSIONAL ENGINEER MOHAN S. CHAR No. C057894 Exp. 6/30/10 CIVIL STATE OF CALIFORNIA

STAMP IS VALID FOR REVISION 1 & 2 ONLY

LEGEND:

- Denotes Closure Pour, see "Note 6"
- Denotes Bearing & Grout Installation
- (A) Denotes Grid designation
- ** Denotes Thickened Diaphragm between Girders (C) & (J) only

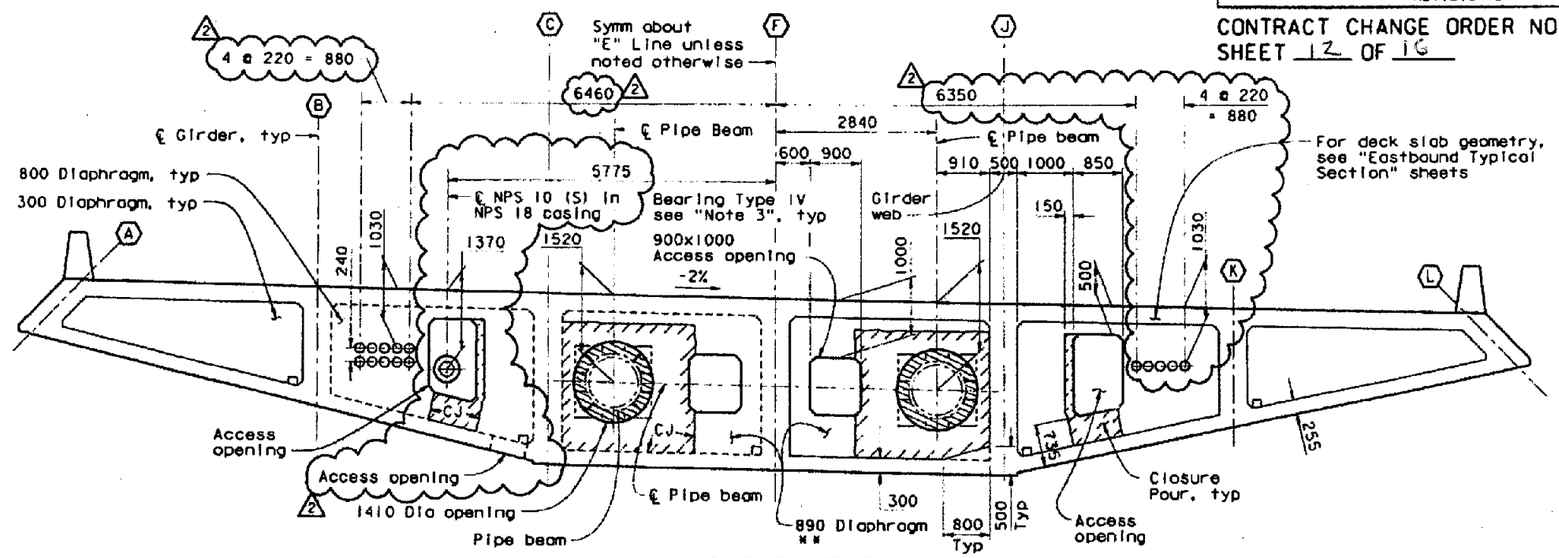

SECTION D-D

1:50

Notes:

1. For construction of the hinge assembly, see "Construction Sequence at Hinge E" sheet.
2. For dimensions not shown, see "Eastbound Hinge EE Details No. 1" and "Eastbound Hinge EE Details No. 3".
3. Pipe beams, circular segmented bearings and bearing restraint brackets shown in final positions. Contractor shall install pipe beams, bearings and restraint brackets into final positions. For details of contract work at Hinge EE, see "Construction Sequence at Hinge E" sheet. For Bearing assemblies grouted into final position, see "Hinge E Bearing Details No. 1 through No. 5" sheets.
4. For "a" dimension and Expansion Joint blockout detail, see "Deck Joint Details" sheet.
5. 1
6. Concrete strength for closure pour shall be same as concrete strength for bridge superstructure.

Note: The Contractor shall verify all controlling field dimensions before ordering or fabricating any material.

ALL DIMENSIONS ARE IN MILLIMETERS UNLESS OTHERWISE SHOWN

DESIGN OVERSIGHT: SAM AKRAD, FRANCISCO CARPIO, BERNARD CHAN, HASAN EL-HATLA
SIGN OFF DATE: 3/11/09

	BY	CHECKED
DESIGN	M. CHAR	T. DUDLEY
DETAILS	N. MORCILLO/M. ANDRASEK	M. CHAR
QUANTITIES	N. MORCILLO/Y. KIM	V. SIVAKOLUNDU/T. DUDLEY

PREPARED FOR THE STATE OF CALIFORNIA DEPARTMENT OF TRANSPORTATION

MOHAN S. CHAR
PROJECT ENGINEER

CU 04
EA 0120L1

BRIDGE NO. 34-0006L/R
KILOMETER POST 1.6

SAN FRANCISCO OAKLAND BAY BRIDGE
EAST SPAN SEISMIC SAFETY PROJECT

OAKLAND APPROACH STRUCTURES - PHASE I

EASTBOUND HINGE EE DETAILS NO. 2

DISREGARD PRINTS BEARING EARLIER REVISION DATES

REVISION DATES (PRELIMINARY STAGE ONLY)

SHEET 126 OF 224

ORIGINAL SCALE IN MILLIMETERS FOR REDUCED PLANS 0 10 20 30 40 50 60 70 80 90 100

Rev. Date: 5-16-08

FILE => J:\33100\CIVIL\00\02\2009 CCDs\Hinge Details CCD\04 0120L1 34 006 R hinge cad12.dgn

PLOT SCALE 1:1 PLOT DATE 3/11/2009

DIST	COUNTY	ROUTE	KILOMETER POST TOTAL PROJECT	SHEET NO.	TOTAL SHEETS
04	Ala	80	1.6/2.7	240R2	643

REGISTERED ENGINEER - CIVIL

1-29-07

PLANS APPROVAL DATE

The State of California or its officers or agents shall not be responsible for the accuracy or completeness of electronic copies of this plan sheet.

REGISTERED PROFESSIONAL ENGINEER MOHAN S. CHAR No. C057894 Exp. 6/30/08 CIVIL STATE OF CALIFORNIA

T.Y. LIN / MOFFATT & NICHOL
TWO HARRISON STREET, SUITE 500
SAN FRANCISCO, CA 94105

LIM & NASCIMENTO ENGINEERING CORPORATION
12 MAUCHLY, BLDG L
IRVINE, CA 92618

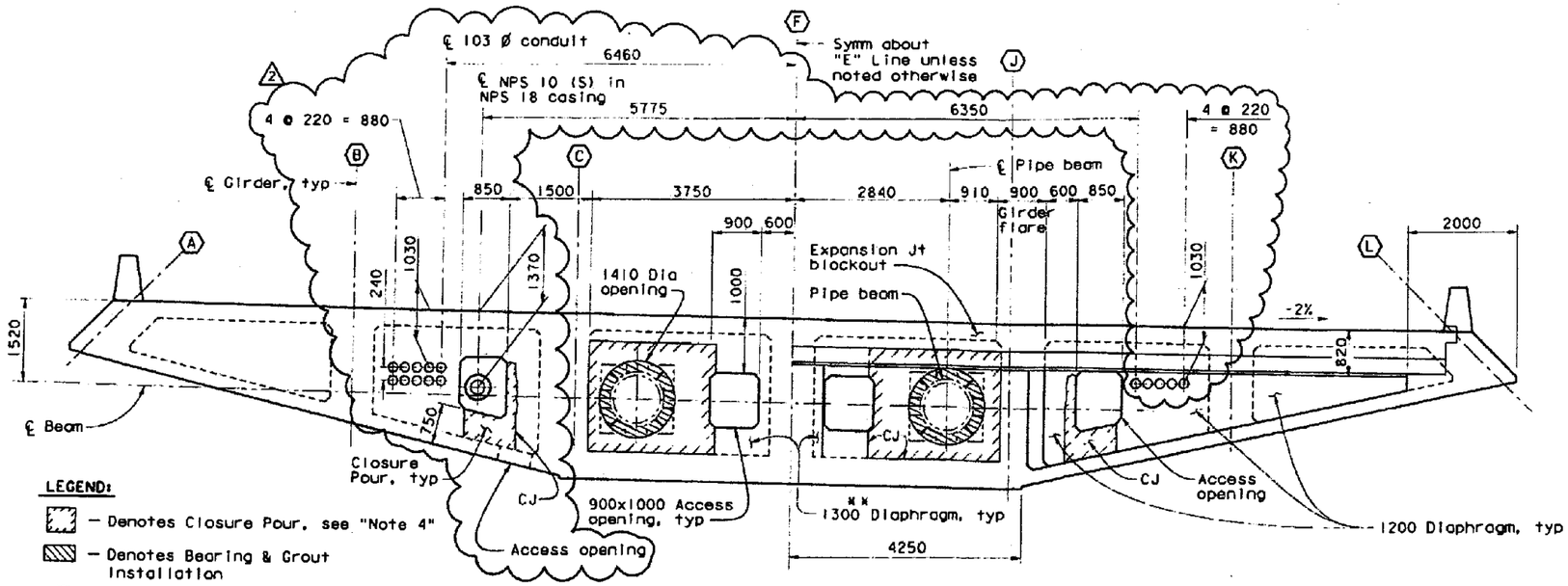

LEGEND:

- Denotes Closure Pour, see "Note 4"
- Denotes Bearing & Grout Installation
- (A) – Denotes Girder designation
- ** – Denotes thickened Diaphragm between Girders (C) & (J) only

SECTION C-C

1:50

Notes:

1. For dimensions not shown, see "Eastbound Hinge EE Details No. 1" and "Eastbound Hinge EE Details No. 2" sheets.
2. Working points (WP) are set based on 3.000 m at end of segment 4E in skyway structure and 2.500 m at "℄ Hinge FE".
3. △1
4. Concrete strength for closure pour shall be same as concrete strength for bridge superstructure.
5. For Dimension "a" and Blockout Details, see "Deck Joint Details" sheet.

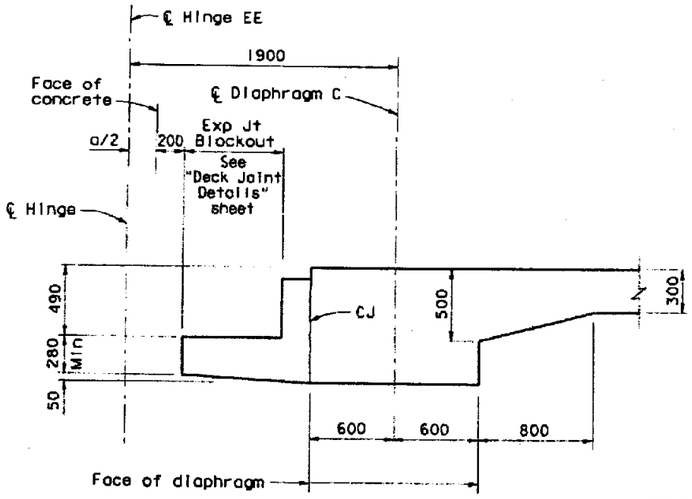

SECTION B-B

1:20

△1

Note: The Contractor shall verify all controlling field dimensions before ordering or fabricating any material.

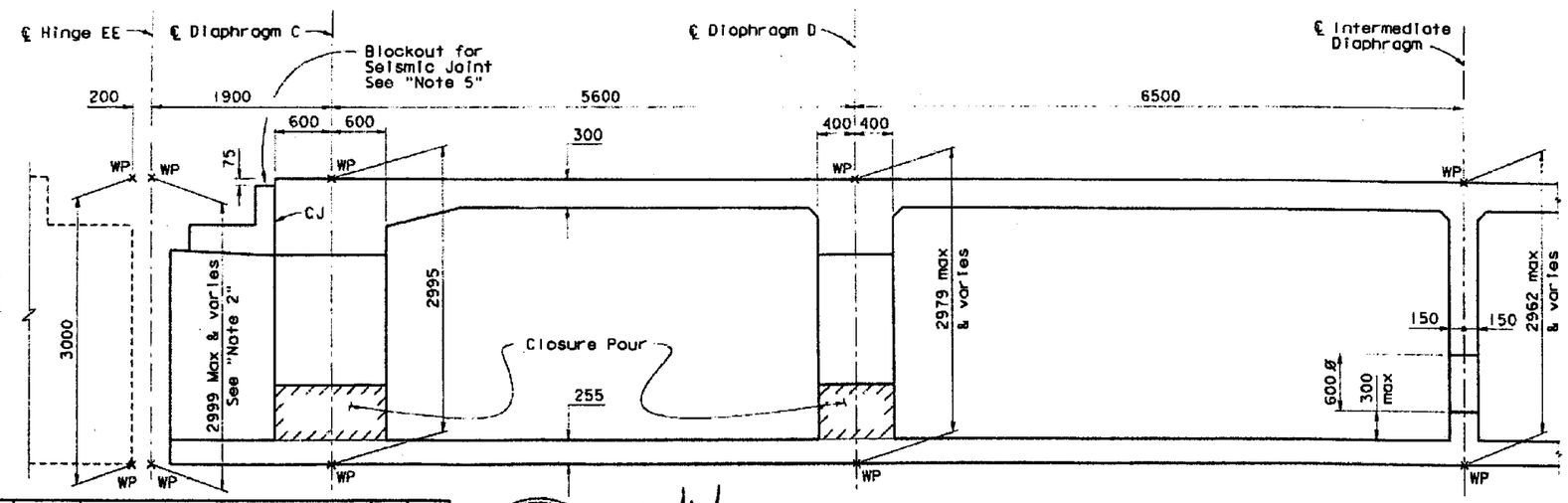

SECTION E-E

No Scale

MARK	DATE	DESCRIPTIONS	BY	CH'D
△1	7/31/08	NOTE 3 DELETED: CONTRACTOR TO VERIFY DIMENSIONS IN FIELD NOTE ADDED	MSC	TWD
△2	3/9/09	SEWER LINE RELOCATED TO MATCH SKYWAY ADJUST PIPE SLEEVE LOCATIONS	MSC	TWD

REVISION(S)

REGISTERED PROFESSIONAL ENGINEER MOHAN S. CHAR No. C057894 Exp. 6/30/10 CIVIL STATE OF CALIFORNIA

STAMP IS VALID FOR REVISION △1 & △2 ONLY

CONTRACT CHANGE ORDER NO. 101
SHEET 13 OF 16

ALL DIMENSIONS ARE IN MILLIMETERS UNLESS OTHERWISE SHOWN

DESIGN OVERSIGHT: SAM AKRAD, FRANCISCO CARRIO, BERNARD CHAN, OSAMA EL-BATUR
SIGN OFF DATE 3/11/09

	BY	CHECKED
DESIGN	M. CHAR	T. DUDLEY
DETAILS	N. MORCILLO/M. ANDRASEK	M. CHAR
QUANTITIES	M. MORCILLO/Y. KIM	V. SIVAKOLUNDU/T. DUDLEY

PREPARED FOR THE STATE OF CALIFORNIA DEPARTMENT OF TRANSPORTATION

MOHAN S. CHAR, PROJECT ENGINEER

BRIDGE NO. 34-0006L/R
KILOMETER POST 1.6

SAN FRANCISCO OAKLAND BAY BRIDGE
EAST SPAN SEISMIC SAFETY PROJECT

OAKLAND APPROACH STRUCTURES - PHASE I

EASTBOUND HINGE EE DETAILS NO. 3

CU 04
EA 0120L1

DISREGARD PRINTS BEARING EARLIER REVISION DATES

SHEET 127 OF 224

Rev. Date: 5-18-98

ORIGINAL SCALE IN MILLIMETERS FOR REDUCED PLANS 0 10 20 30 40 50 60 70 80 90 100

FILE > GENERIDGENTYL 0502\2009 CCOs\Hinge Details CCO\04 0120L1 34-0006 Hinge eeo13.dgn

DIST.	COUNTY	ROUTE	KILOMETER POST TOTAL PROJECT	SHEET NO.	TOTAL SHEETS
04	Ala	80	1.6/2.7	265R1	643

REGISTERED ENGINEER - CIVIL

1-29-07

PLANS APPROVAL DATE

The State of California or its officers or agents shall not be responsible for the accuracy or completeness of electronic copies of this plan sheet.

REGISTERED PROFESSIONAL ENGINEER MOHAN S. CHAR No. C057834 Exp. 6/30/08 CIVIL STATE OF CALIFORNIA

T.Y. LIN / MOFFATT & NICHOL
TWO HARRISON STREET, SUITE 500
SAN FRANCISCO, CA 94105

LIM & NASCIMENTO ENGINEERING CORPORATION
12 MAUCHLY, BLDG L
IRVINE, CA 92618

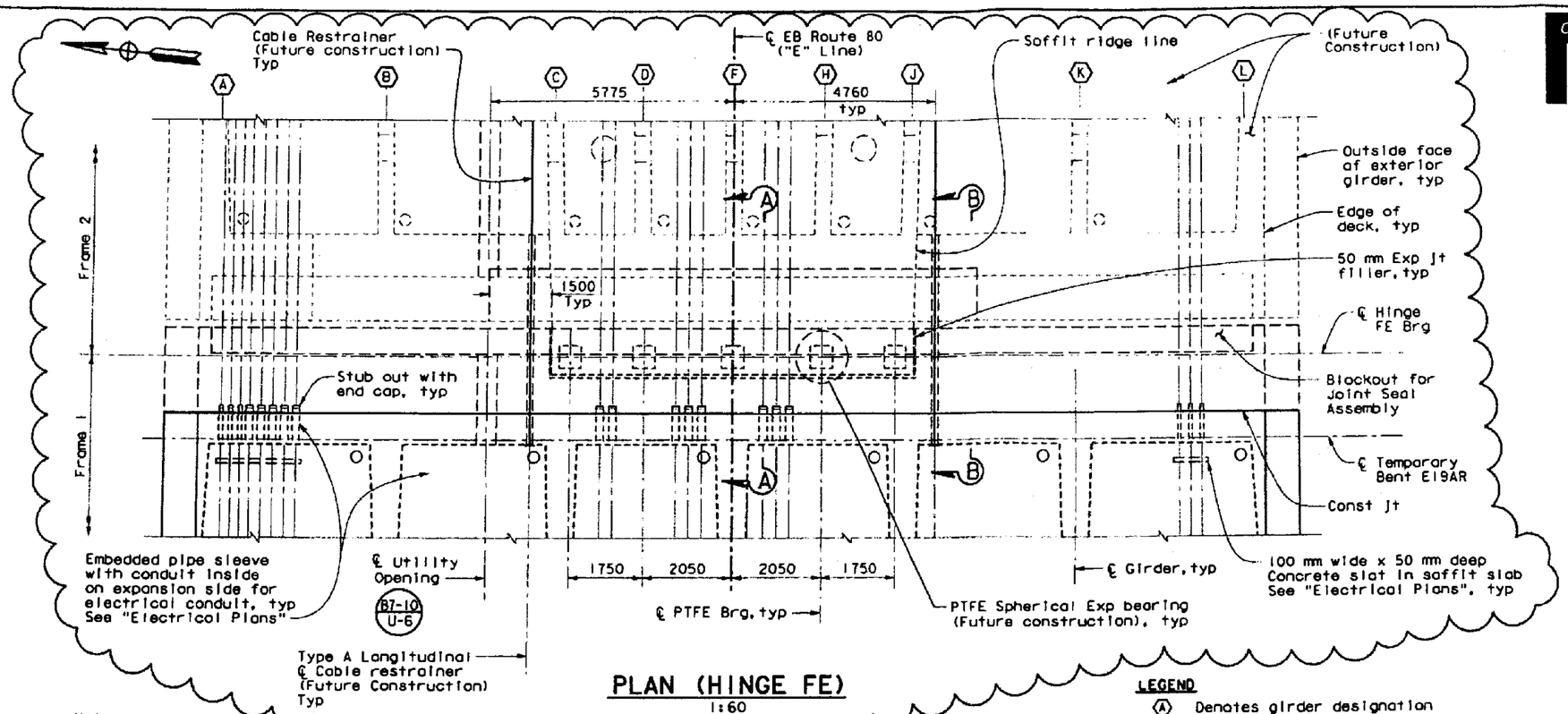

PLAN (HINGE FE)
1:60

Notes:

1. For "Section A-A", see "Eastbound Hinge FE Details No. 2" sheet.
2. For "Section B-B", see "Eastbound Hinge FE Details No. 3" sheet.
3. For Access openings, see "Miscellaneous Details No. 1" sheet.

LEGEND

- (A) Denotes girder designation
- Denotes bundled bars
- Denotes headed bar (both ends)
- Denotes headed bar (one end)
- * Depth includes 410 mm max blockout for joint seal assembly

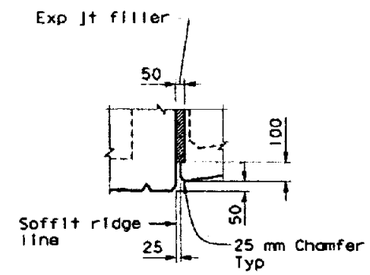

DETAIL 1
1:15

STAMP IS VALID FOR REVISION 1 ONLY

REGISTERED PROFESSIONAL ENGINEER MOHAN S. CHAR No. C057834 Exp. 6/30/10 CIVIL STATE OF CALIFORNIA

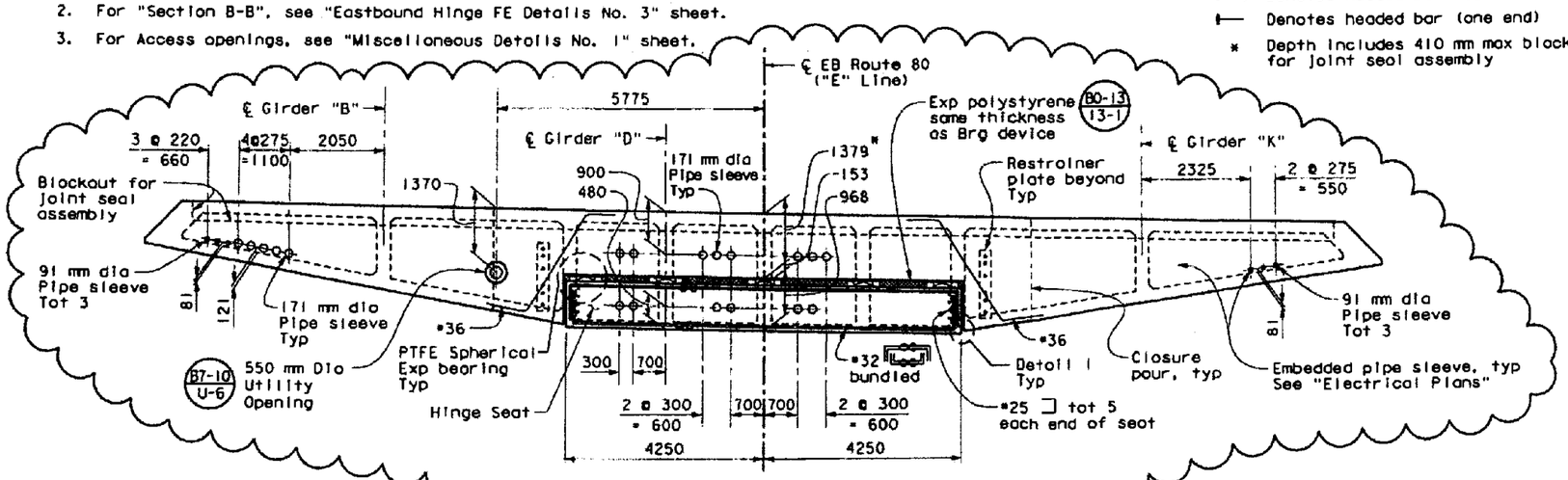

ELEVATION (HINGE FE)
1:60

MARK	DATE	DESCRIPTION	BY	CH'D
1	4/29/09	REVISED ELECTRICAL PIPE SLEEVE. SEWER LINE & CABLE RESTRAINER LOCATIONS; REVISED FUTURE HINGE SEAT DIMENSIONS	MSC	TWD

REVISION(S)

CONTRACT CHANGE ORDER NO. 101
SHEET 14 OF 16

ALL DIMENSIONS ARE IN MILLIMETERS UNLESS OTHERWISE SHOWN

DESIGN OVERSIGHT
SAM AKRAD FRANCISCO CAMPILO BERNARD CHAN HASAN EL-BATTUR
SIGN OFF DATE 5/4/2009

	BY	CHECKED
DESIGN	M. CHAR	T. DUDLEY
DETAILS	N. MORCILLO/M. ANDRASEK	M. CHAR
QUANTITIES	N. MORCILLO/Y. KIM	V. SIVAKOLUNDU/T. DUDLEY

PREPARED FOR THE STATE OF CALIFORNIA DEPARTMENT OF TRANSPORTATION

MOHAN S. CHAR
PROJECT ENGINEER

CU 04
EA 0120L1

BRIDGE NO. 34-0006L/R
KILOMETER POST 1.6

DISREGARD PRINTS BEARING EARLIER REVISION DATES

SAN FRANCISCO OAKLAND BAY BRIDGE
EAST SPAN SEISMIC SAFETY PROJECT

OAKLAND APPROACH STRUCTURES - PHASE 1

EASTBOUND HINGE FE DETAILS NO. 1

SHEET 152 OF 224

Rev. Date: 5-15-08

ORIGINAL SCALE IN MILLIMETERS FOR REDUCED PLANS 0 10 20 30 40 50 60 70 80 90 100

DIST.	COUNTY	ROUTE	KILOMETER POST TOTAL PROJECT	SHEET NO.	TOTAL SHEETS
04	Ala	80	1.6/2.7	266R1	643

REGISTERED ENGINEER - CIVIL

1-29-07

PLANS APPROVAL DATE

The State of California or its officers or agents shall not be responsible for the accuracy or completeness of electronic copies of this plan sheet.

REGISTERED PROFESSIONAL ENGINEER MOHAN S. CHAR No. C057894 Exp. 6/30/08 CIVIL STATE OF CALIFORNIA

T.Y. LIN / MOFFATT & NICHOL
TWO HARRISON STREET, SUITE 500
SAN FRANCISCO, CA 94105

LIM & NASCIMENTO ENGINEERING CORPORATION
12 MAUCHLY, BLDG L
IRVINE, CA 92618

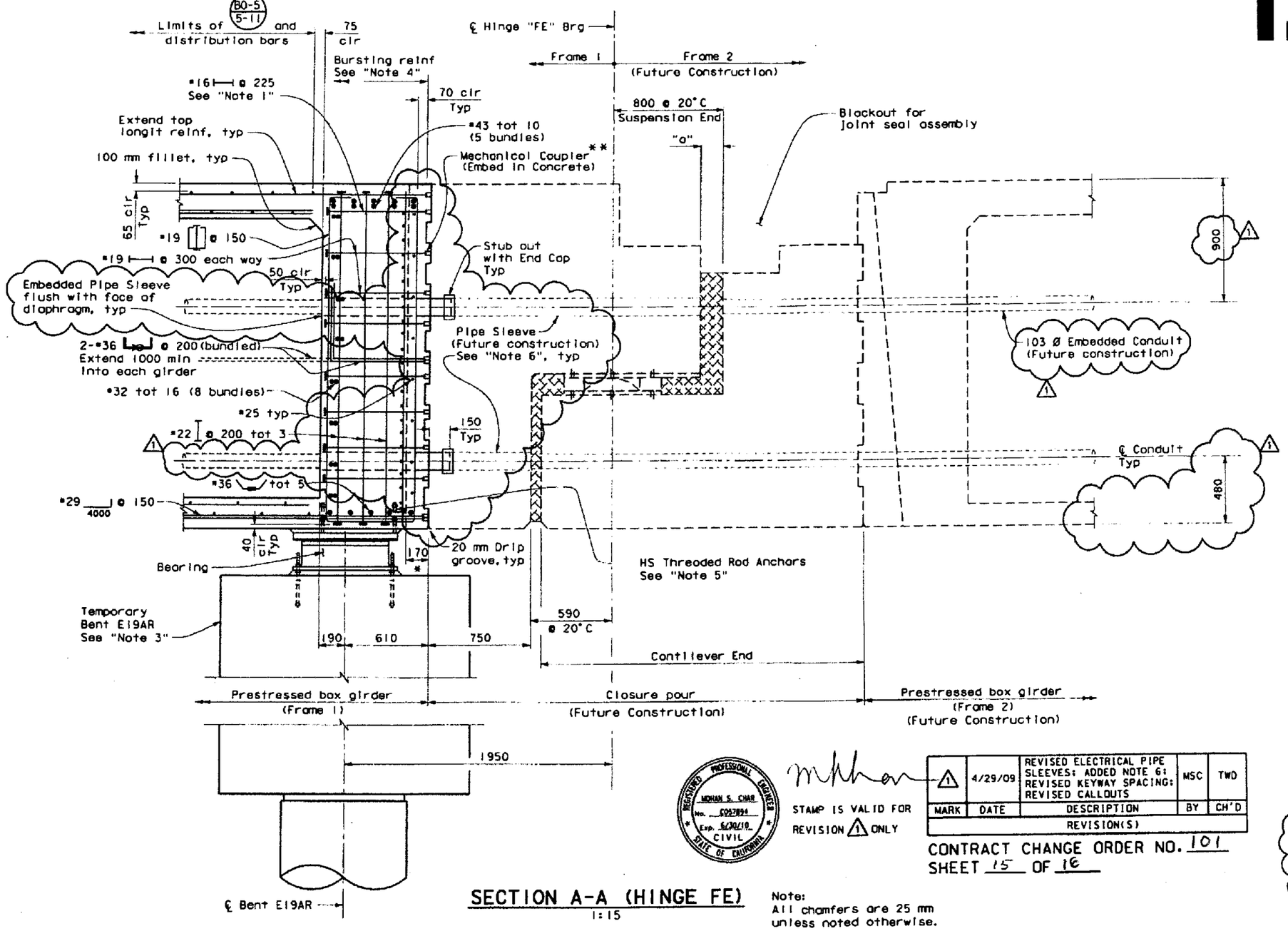

SECTION A-A (HINGE FE)

1:15

Note:
All chamfers are 25 mm unless noted otherwise.

REGISTERED PROFESSIONAL ENGINEER MOHAN S. CHAR No. C057894 Exp. 6/30/10 CIVIL STATE OF CALIFORNIA

STAMP IS VALID FOR REVISION 1 ONLY

MARK	DATE	DESCRIPTION	BY	CH'D
1	4/29/09	REVISED ELECTRICAL PIPE SLEEVES; ADDED NOTE 6; REVISED KEYWAY SPACING; REVISED CALLOUTS	MSC	TWD
		REVISION(S)		

CONTRACT CHANGE ORDER NO. 101
SHEET 15 OF 16

LEGEND

- Denotes mechanical splice
- Denotes bundled bars
- Denotes headed bar (both ends)
- ** Mechanical Coupler shall meet Ultimate Splice requirements
- * Assume 170 mm to post-tensioning anchor recess

Notes:

1. No lap splices allowed in main diaphragm reinforcing.
2. For "a" dimension, see "Deck Joint Details" sheet.
3. For Temporary Bent E19AR Details, see "Eastbound Temporary Bent E19AR No. 1 & No. 2" sheets.
4. Bursting reinforcing similar to "Detail 1" on "Eastbound Hinge FE Details No. 3" sheet.
5. The Contractor can modify the anchor locations if required, subject to approval of the Engineer.
6. The Contractor shall mate test pipe sleeves that represent future construction with pipe sleeves from Frame 1 to ensure overall alignment of the mated pipe sleeves is straight prior to concrete pour in Frame 1. (1)

ALL DIMENSIONS ARE IN MILLIMETERS UNLESS OTHERWISE SHOWN

DESIGN OVERSIGHT
SAN AKKAD FRANCISCO CARPIO BERNARD CHAN HASAN EL-NATUR
SIGN OFF DATE 5/4/2009

	BY	CHECKED
DESIGN	M. CHAR	T. DUDLEY
DETAILS	N. MORCILLO/M. ANDRASEK	M. CHAR
QUANTITIES	N. MORCILLO/Y. KIM	V. SIVAKOLUNDU/T. DUDLEY

PREPARED FOR THE STATE OF CALIFORNIA DEPARTMENT OF TRANSPORTATION

MOHAN S. CHAR
PROJECT ENGINEER

CU 04
EA 0120L1

BRIDGE NO. 34-0006L/R
KILOMETER POST 1.6

SAN FRANCISCO OAKLAND BAY BRIDGE
EAST SPAN SEISMIC SAFETY PROJECT

OAKLAND APPROACH STRUCTURES - PHASE I

EASTBOUND HINGE FE DETAILS NO. 2

DISREGARD PRINTS BEARING EARLIER REVISION DATES

REVISION DATES (PRELIMINARY STAGE ONLY)

SHEET 153 OF 224

Rev. Date: 3-18-98

ORIGINAL SCALE IN MILLIMETERS FOR REDUCED PLANS 0 10 20 30 40 50 60 70 80 90 100

DIST.	COUNTY	ROUTE	KILOMETER POST TOTAL PROJECT	SHEET NO.	TOTAL SHEETS
04	Ala	80	1.6/2.7	292R2	643

REGISTERED ENGINEER - CIVIL
1-29-07
PLANS APPROVAL DATE
MOHAN S. CHAR No. C057894 Exp. 6/30/08 CIVIL STATE OF CALIFORNIA
The State of California or its officers or agents shall not be responsible for the accuracy or completeness of electronic copies of this plan sheet.

T.Y. LIN / MOFFATT & NICHOL
TWO HARRISON STREET, SUITE 500
SAN FRANCISCO, CA 94105

LIM & NASCIMENTO ENGINEERING CORPORATION
12 MAUCHLY, BLDG L
IRVINE, CA 92618

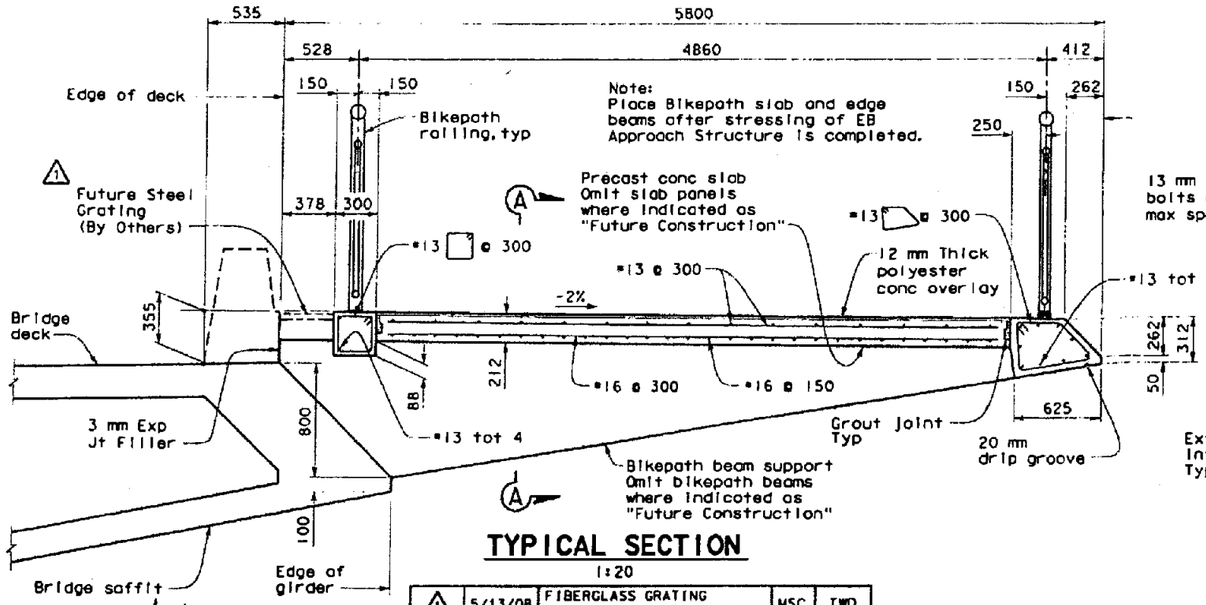

TYPICAL SECTION
1:20

MARK	DATE	DESCRIPTIONS	BY	CH'D
1	5/13/08	FIBERGLASS GRATING CHANGED TO STEEL GRATING	MSC	TWD
2	3/9/09	ADDED DECK ACCESS OPENING ADDED DIAPHRAGM OPENINGS	MSC	TWD
REVISION(S)				

STAMP IS VALID FOR REVISION 1 & 2 ONLY

MOHAN S. CHAR No. C057894 Exp. 6/30/10 CIVIL STATE OF CALIFORNIA

CONTRACT CHANGE ORDER NO. 101
SHEET 16 OF 16

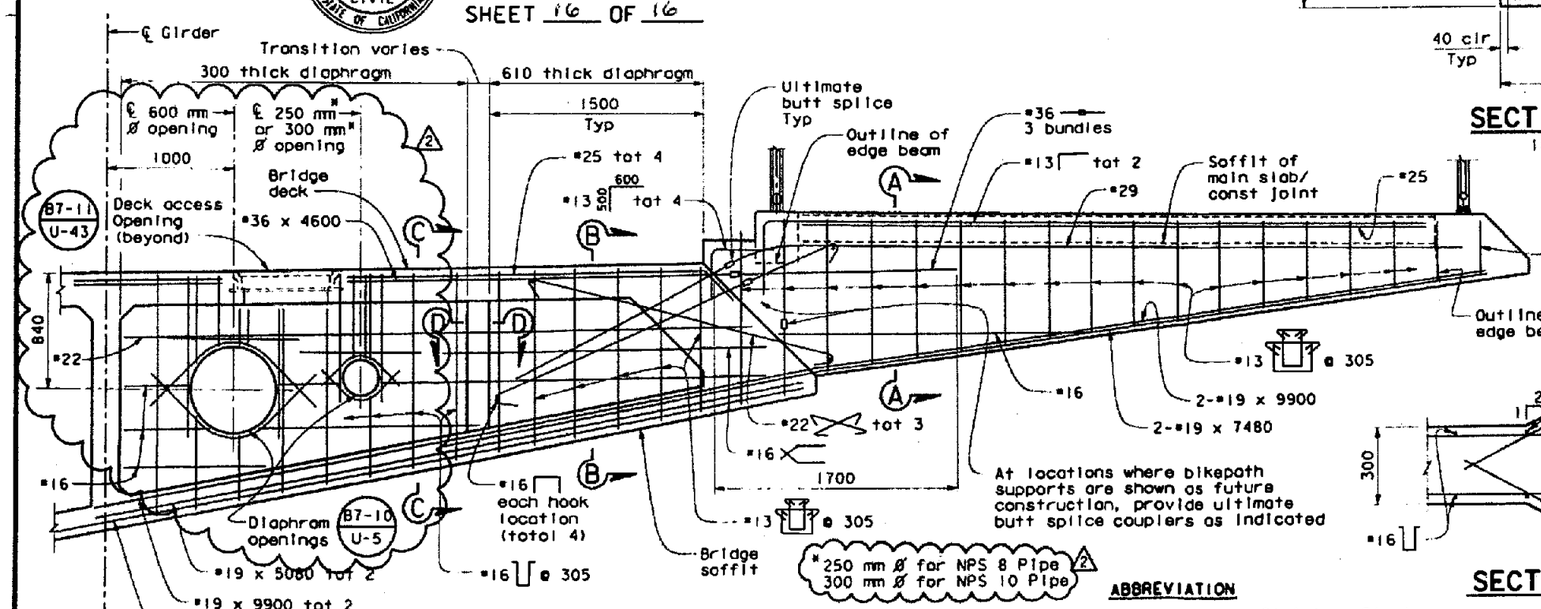

TYPICAL SECTION AT BIKEPATH SUPPORT
1:20

ABBREVIATION

SS - Indicates Stainless Steel

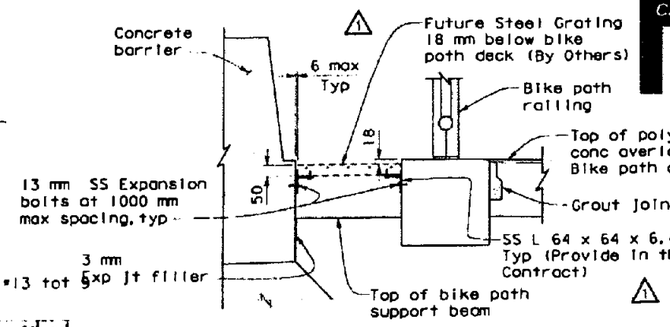

BIKEPATH GRATING DETAIL
1:10

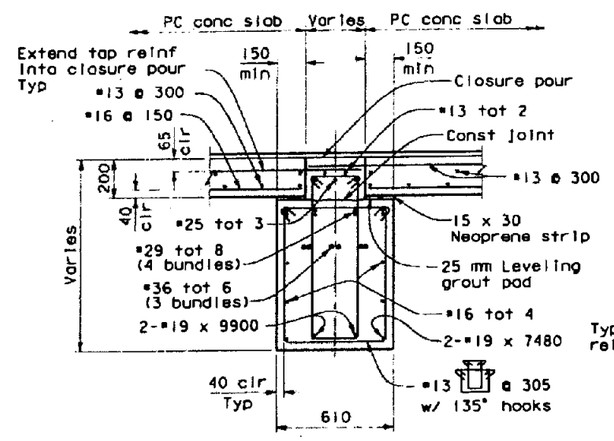

SECTION A-A
1:15

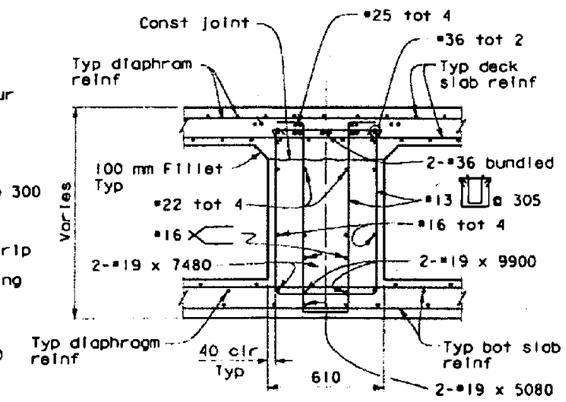

SECTION B-B
1:15

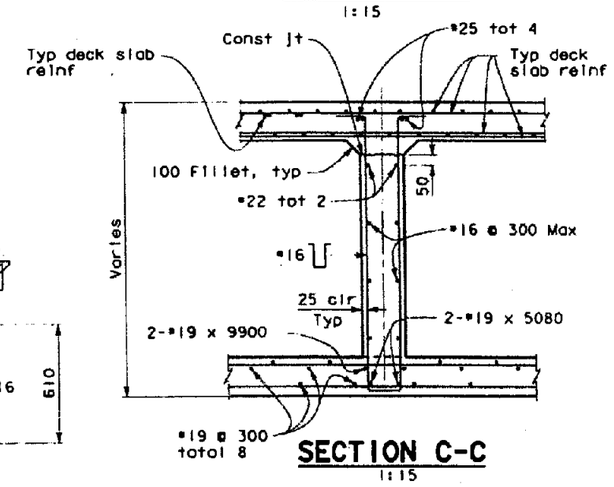

SECTION C-C
1:15

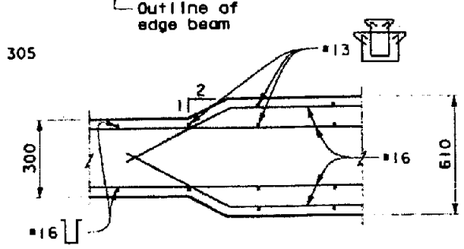

SECTION D-D
1:15

ALL DIMENSIONS ARE IN MILLIMETERS UNLESS OTHERWISE SHOWN

SAN FRANCISCO OAKLAND BAY BRIDGE
EAST SPAN SEISMIC SAFETY PROJECT

OAKLAND APPROACH STRUCTURES - PHASE I
EASTBOUND BIKEPATH DETAILS NO. 2

DESIGN OVERSIGHT: SAM ABRAO, FRANCISCO CARPIO, BERNARD CHAN, HASAN EL-NATOUR
8-10-06
SIGN OFF DATE

	BY	CHECKED
DESIGN	M. CHAR	T. DUDLEY
DETAILS	N. MORCILLO/M. ANDRASER	M. CHAR
QUANTITIES	N. MORCILLO/Y. KIM	V. SIVAKOLUNDU/T. DUDLEY

PREPARED FOR THE STATE OF CALIFORNIA DEPARTMENT OF TRANSPORTATION

MOHAN S. CHAR
PROJECT ENGINEER

BRIDGE NO. 34-0006L/R
KILOMETER POST 1.6

CU 04
EA 0120L1

DISREGARD PRINTS BEARING EARLIER REVISION DATES

SHEET 179 OF 224

Rev. Date: 5-16-06

ORIGINAL SCALE IN MILLIMETERS FOR REDUCED PLANS 0 10 20 30 40 50 60 70 80 90 100

FILE => U:\archdge\TYL10502\2009 CCOs\Bikepath CCO\04-012011-34-006-us-bikeder-east2.dgn

DATE PLOTTED => 3/10/2009 TIME PLOTTED => 5:23:00 PM

STATE OF CALIFORNIA - DEPARTMENT OF TRANSPORTATION

CONTRACT CHANGE ORDER MEMORANDUM

DATE: 6/4/2009 Page 1 of 1

TO: AMER BATA / BEN GHAFGHAZI	FILE: E.A. 04 - 0120L4
FROM: BEN GHAFGHAZI	CO-RTE-PM ALA-80-1.6/2.7
	FED. NO. NO FED AID
CCO#: 101 SUPPLEMENT#: 1 Category Code: CHPT	CONTINGENCY BALANCE (incl. this change) $6,523,230.20
COST: $0.00 INCREASE ☐ DECREASE ☐	HEADQUARTERS APPROVAL REQUIRED? ☐ YES ☑ NO
SUPPLEMENTAL FUNDS PROVIDED: $0.00	IS THIS REQUEST IN ACCORDANCE WITH ENVIRONMENTAL DOCUMENTS? ☑ YES ☐ NO
CCO DESCRIPTION: Relocate drainage in Bridge No 34-0006R.	**PROJECT DESCRIPTION:** Construct bridge, roadway, building and electrical system.

Original Contract Time:	Time Adj. This Change:	Previously Approved CCO Time Adjustments:	Percentage Time Adjusted: (including this change)	Total # of Unreconciled Deferred Time CCO(s): (including this change)
810 Day(s)	0 Day(s)	184 Day(s)	23 %	10

THIS CHANGE ORDER PROVIDES FOR:

Relocating drain line in Bridge No. 34-0006R from exterior bay between girder L and K to interior bay between girder K and J as shown on sheets 2 of 10 through 10 of 10 of the CCO. These sheets shall replace sheets 2, 4, 5, 6, 7, 8, 9, and 16 of 16 of CCO No. 101.

This change is necessary to eliminate installing blockouts and access openings in the exterior bay. The drain was originally in the exterior bay. The exterior bays contain the edge beams for the bike path. The original plans do now show the bike path support beams in the outer bay and, therefore, did not have any details for openings in the beams. In lieu of revising the beams, the drain line will be relocated into the first interior bay.

There will be no additional cost due to this change.

This change has been discussed and concurred with Hasan El Natur of Structures Design, Jal Birdy of Moffat Nichol, and Lina Ellis of Structures Maintenance.

No adjustment of contract time is warranted since this change does not affect the controlling operation.

CONCURRED BY:			
Construction Engineer:	Ben Ghafghazi	Date	6/23/09
Bridge Engineer:	Mehran Ardakanian	Date	06/23/09
Project Engineer:	Hasan El-Natur, Structures Design	Date	5/20/09
Project Manager:		Date	
FHWA Rep.:		Date	
Environmental:		Date	
Other (specify):	Lina Ellis, Structures Maint.	Date	6/9/09
Other (specify):	Jal Birdy, Moffat Nichol	Date	3/20/09
District Prior Approval By:		Date	
HQ (Issue Approve) By:		Date	
Resident Engineer's Signature:		Date	6/23/09

ESTIMATE OF COST

	THIS REQUEST	TOTAL TO DATE
ITEMS	$0.00	$0.00
FORCE ACCOUNT	$0.00	$100,000.00
AGREED PRICE	$0.00	$0.00
ADJUSTMENT	$0.00	$0.00
TOTAL	$0.00	$100,000.00

FEDERAL PARTICIPATION

☐ PARTICIPATING ☐ PARTICIPATING IN PART ☑ NONE
☐ NON-PARTICIPATING (MAINTENANCE) ☐ NON-PARTICIPATING

FEDERAL SEGREGATION (if more than one Funding Source or P.I.P. type)
☑ CCO FUNDED PER CONTRACT ☐ CCO FUNDED AS FOLLOWS

FEDERAL FUNDING SOURCE PERCENT

ADA Notice: For individuals with sensory disabilities, this document is available in alternate formats. For information call: (916) 654-6410 or TDD (916) 654-3880 or write Records and Forms Management, 1120 N Street, MS-89, Sacramento, CA 95814.

CONTRACT CHANGE ORDER

Change Requested by: Engineer

CCO 101	Suppl. No. 1	Contract No. 04 - 0120L4	Road ALA-80-1.6/2.7	FED. AID LOC.: NO FED AID

M C M CONSTRUCTION INC

You are directed to make the following changes from the plans and specifications or do the following described work not included in the plans and specifications for this contract. ***NOTE: This change order is not effective until approved by the Engineer.***

Description of work to be done, estimate of quantities and prices to be paid. (Segregate between additional work at contract price, agreed price and force account.) Unless otherwise stated, rates for rental of equipment cover only such time as equipment is actually used and no allowance will be made for idle time. This last percentage shown is the net accumulated increase or decrease from the original quantity in the Engineer's Estimate.

Relocate drain line in Bridge No. 34-0006R from exterior bay between girder L and K to interior bay between girder K and J as shown on sheets 2 of 10 through 10 of 10 of this CCO. These sheets shall replace sheets 2, 4, 5, 6, 7, 8, 9, and 16 of 16 of CCO No. 101.

Estimated Cost: Increase ☐ **Decrease** ☐ **$0.00**

By reason of this order the time of completion will be adjusted as follows: 0 days

Submitted by

Signature	Resident Engineer BEN GHAFGHAZI	Date 6/5/09

Approval Recommended by

Signature	Construction Engineer Ben Ghafghazi	Date 6/5/09

Engineer Approval by

Signature	Construction Manager Amer Bata	Date 9/24/09

We the undersigned contractor, have given careful consideration to the change proposed and agree, if this proposal is approved, that we will provide all equipment, furnish the materials, except as may otherwise be noted above, and perform all services necessary for the work above specified, and will accept as full payment therefor the prices shown above.

NOTE: If you, the contractor, do not sign acceptance of this order, your attention is directed to the requirements of the specifications as to proceeding with the ordered work and filing a written protest within the time therein specified.

Contractor Acceptance by

Signature	(Print name and title) EDMUNDO A. PUCHI, TREASURER	Date 9/16/09

DIST.	COUNTY	ROUTE	KILOMETER POST TOTAL PROJECT	SHEET NO.	TOTAL SHEETS
04	Ala	80	1.6/2.7	121R3	643

REGISTERED ENGINEER - CIVIL

1-29-07

PLANS APPROVAL DATE

The State of California or its officers or agents shall not be responsible for the accuracy or completeness of electronic copies of this plan sheet.

REGISTERED PROFESSIONAL ENGINEER MOHAN S. CHAR No. C057894 Exp. 6/30/08 CIVIL STATE OF CALIFORNIA

T.Y. LIN / MOFFATT & NICHOL
TWO HARRISON STREET, SUITE 500
SAN FRANCISCO, CA 94105

LIM & NASCIMENTO ENGINEERING CORPORATION
12 MAUCHLY, BLDG L
IRVINE, CA 92618

To get to the Caltrans web site, go to: http://www.dot.ca.gov

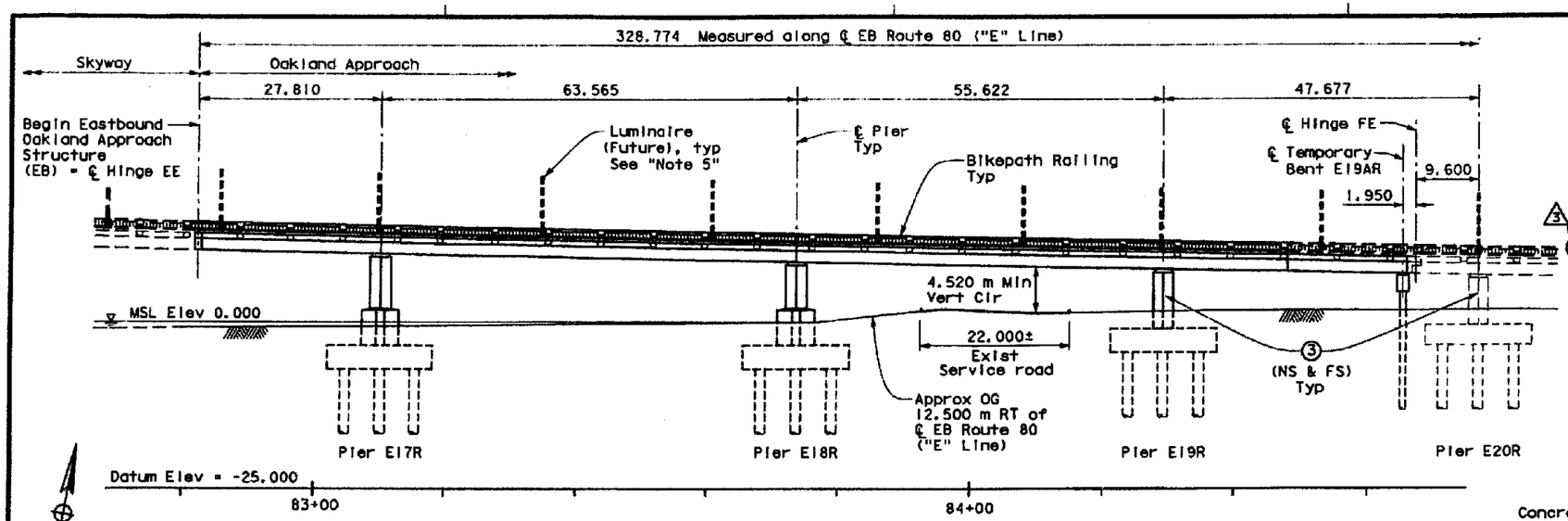

DEVELOPED ELEVATION

1:400

DECK DRAIN LOCATIONS*	
Station	Side
83+28.410	Rt
83+57.200	Rt
84+12.030	Rt
84+50.000	Rt

* See "Note 8"

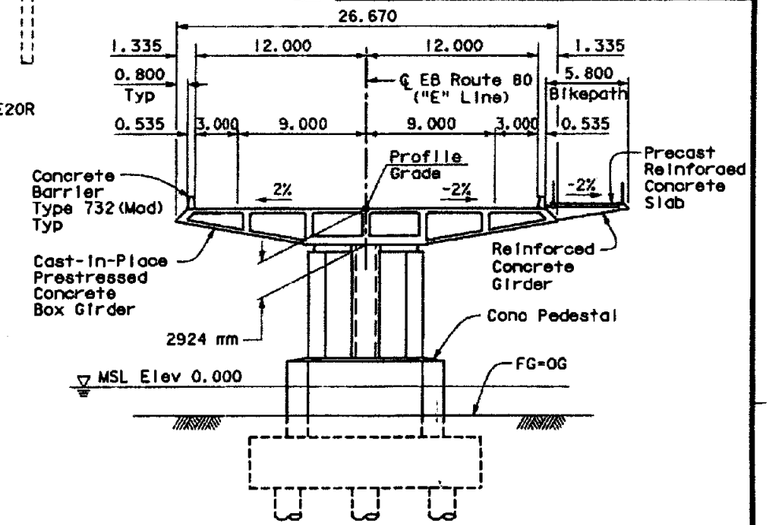

TYPICAL SECTION

1:200

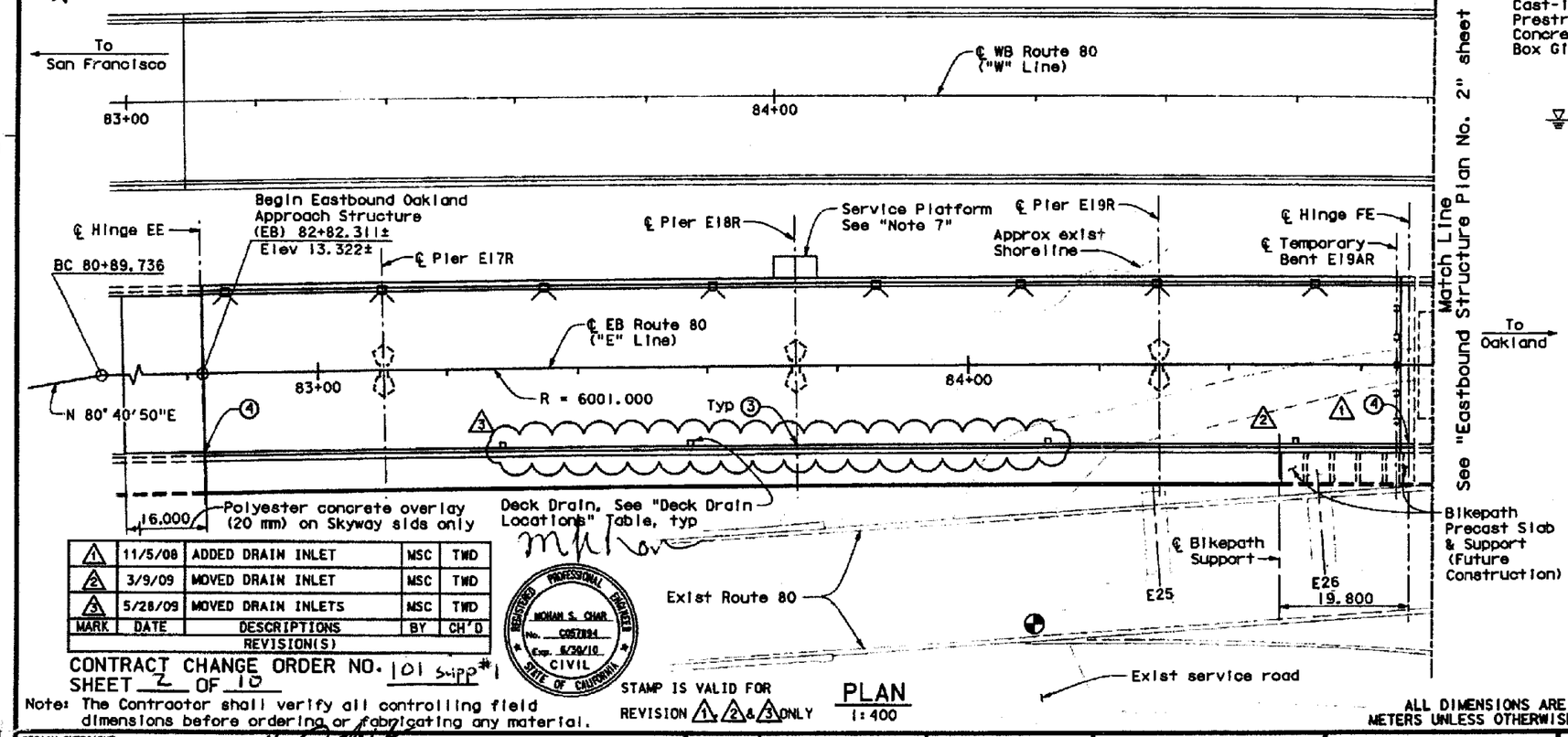

Notes:
1. Pier E17R shown. Piers E18R and E19R similar except where shown otherwise.
2. For Westbound Structure, see "Westbound Structure Plan No. 1 and No. 2" sheets.
3. For Deck Drain Details see "Miscellaneous Details No. 2" sheet.
4. For Luminaire Supports see "Miscellaneous Details No. 1" sheet.
5. For Luminaire and Locations, see "Roadway Plans".
6. Utilities not shown. See "Eastbound Typical Section 1 & 2" sheets.
7. For Service Platform, see "Service Platforms, Utility Vault and Precast Wall General Plan 1" sheet.
8. For Schematic Deck Drain Layout, see "Miscellaneous Details No. 4" sheet.

LEGEND

- → Indicates Direction of Travel
- Indicates luminaire
- Indicates deck drain, Type D-1 (Mod)
- Point of minimum vertical clearance at exist Route 80
- (3) Point Pier Number (NS & FS)
- (4) Point hinge name "Hinge EE" or "Hinge FE" as applicable

MARK	DATE	DESCRIPTIONS	BY	CH'D
1	11/5/08	ADDED DRAIN INLET	MSC	TWD
2	3/9/09	MOVED DRAIN INLET	MSC	TWD
3	5/28/09	MOVED DRAIN INLETS	MSC	TWD

REVISION(S)

CONTRACT CHANGE ORDER NO. 101 Supp#1
SHEET 2 OF 10

Note: The Contractor shall verify all controlling field dimensions before ordering or fabricating any material.

REGISTERED PROFESSIONAL ENGINEER MOHAN S. CHAR No. C057894 Exp. 6/30/10 CIVIL STATE OF CALIFORNIA

STAMP IS VALID FOR REVISION 1, 2 & 3 ONLY

PLAN

1:400

ALL DIMENSIONS ARE IN METERS UNLESS OTHERWISE SHOWN

SAN FRANCISCO OAKLAND BAY BRIDGE
EAST SPAN SEISMIC SAFETY PROJECT

OAKLAND APPROACH STRUCTURES - PHASE I

EASTBOUND STRUCTURE PLAN NO. 1

DESIGN OVERSIGHT: SAM AHMAD, FRANCISCO CARPIO, BERNARD CHAN, HASAN EL-HATIB — SIGN OFF DATE 6/3/09

	BY	CHECKED
DESIGN	M. CHAR	T. DUDLEY
DETAILS	N. MORCILLO/M. ANDRASEK	M. CHAR
QUANTITIES	N. MORCILLO/Y. KIM	V. SIVAKOLUNDU/T. DUDLEY

PREPARED FOR THE STATE OF CALIFORNIA DEPARTMENT OF TRANSPORTATION

MOHAN S. CHAR, PROJECT ENGINEER

BRIDGE NO. 34-0006L/R
KILOMETER POST 1.6

CU 04
EA 0120L1

DISREGARD PRINTS BEARING EARLIER REVISION DATES → 11/6/08 3/9/09 5/28/09 1/29/07 1/29/07 1/29/07 1/29/07 1/29/07 1/29/07

SHEET 8 OF 224

Rev. Date: 8-16-06

ORIGINAL SCALE IN MILLIMETERS FOR REDUCED PLANS 0 10 20 30 40 50 60 70 80 90 100

FILE => u:\BRIDGE\TYL10502\2009 CCOs\Drain Inlet CCO\04-012011-34-006-c-sp-eastlr3.dgn

USERNAME => LAM DATE PLOTTED => 6/2/2009 TIME PLOTTED => 4141:30 PM

Jun 3, 2009

DIST.	COUNTY	ROUTE	KILOMETER POST TOTAL PROJECT	SHEET NO.	TOTAL SHEETS
04	Ala	80	1.6/2.7	191R2	643

REGISTERED ENGINEER - CIVIL
1-29-07
PLANS APPROVAL DATE

The State of California or its officers or agents shall not be responsible for the accuracy or completeness of electronic copies of this plan sheet.

T.Y. LIN / MOFFATT & NICHOL
TWO HARRISON STREET, SUITE 500
SAN FRANCISCO, CA 94105

LIM & NASCIMENTO ENGINEERING CORPORATION
12 MAUCHLY, BLDG L
IRVINE, CA 92618

To get to the Caltrans web site, go to: http://www.dot.ca.gov

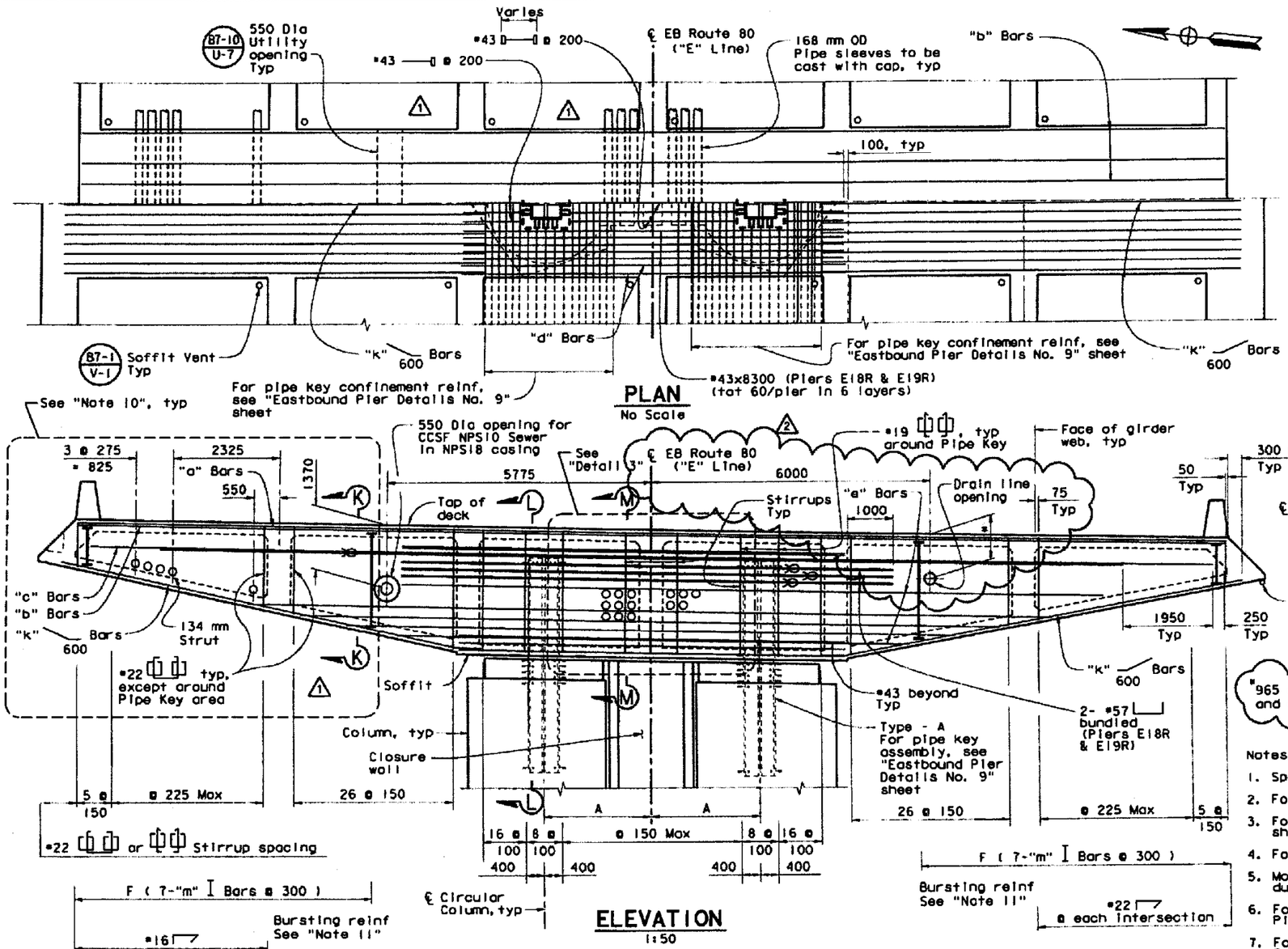

PIER CAP BEAM - PIERS E18R & E19R

Note: Pier E18R shown, Pier E19R similar

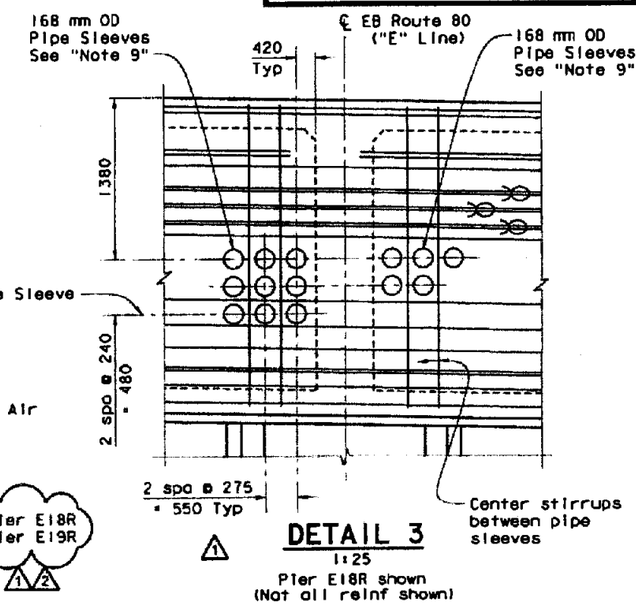

DETAIL 3
1:25
Pier E18R shown
(Not all reinf shown)

"965 at Pier E18R and at Pier E19R

Notes:

1. Spacings & dimensions are measured along ℄ Pier.
2. For information not shown, see "Pier Elevations No. 1 thru 3" sheets.
3. For Sections "K-K", "L-L" & "M-M" see "Eastbound Pier Details No. 7" sheet.
4. For Prestressing Path Layout, see "Eastbound Pier Details No. 8" sheet.
5. Move stirrups to clear reinforcement, conduit, pipes & prestressing ducts at each girder and around pipe key area.
6. For additional reinforcement around pipe key assembly, see "Eastbound Pier Details No. 9" sheet.
7. For reinforcement designations and dimensions, see "Pier Cap Beam Schedule" on "Eastbound Pier Details No. 7" sheet.
8. For utility information, see "Eastbound Typical Section" sheet and "Electrical & Mechanical Plans".
9. Pipe sleeve layout shown for Pier E18R & E19R.
10. For "Cap Beam End Details", see "Eastbound Pier Details No. 11" sheet. Typical except Cap Beam Prestressing Ducts.
11. For bursting reinforcement layout, see "Eastbound Pier Details No. 11" sheet.

REGISTERED PROFESSIONAL ENGINEER MOHAN S. CHAR No. C057894 Exp. 8/30/10 CIVIL STATE OF CALIFORNIA

STAMP IS VALID FOR REVISION 1 & 2 ONLY

MARK	DATE	DESCRIPTIONS	BY	CH'D
1	11/5/08	ADJUST UTILITY LOCATIONS	MSC	TWD
2	5/28/09	MOVED DRAIN LINE OPENING	MSC	TWD

REVISION(S)

CONTRACT CHANGE ORDER NO. 101 Supp #1
SHEET 3 OF 10

DIMENSION TABLE	
Location	A
Pier E18R	2331
Pier E19R	2331

LEGEND

- Denotes headed bar (both ends)
- Denotes headed bar
- Denotes bundled bars

ALL DIMENSIONS ARE IN MILLIMETERS UNLESS OTHERWISE SHOWN

DESIGN OVERSIGHT: SAM AKRAD, FRANCISCO CAMPIO, BERNARD CHAN, HASAN EL-NATUR
SIGN OFF DATE 6/3/09

	BY	CHECKED
DESIGN	M. CHAR	T. DUDLEY
DETAILS	N. MORCILLO/M. ANDRASEK	M. CHAR
QUANTITIES	N. MORCILLO/Y. KIM	Y. SIVAKOLUNDU/T. DUDLEY

PREPARED FOR THE STATE OF CALIFORNIA DEPARTMENT OF TRANSPORTATION

MOHAN S. CHAR
PROJECT ENGINEER

BRIDGE NO. 34-0006L/R
KILOMETER POST 1.6

SAN FRANCISCO OAKLAND BAY BRIDGE
EAST SPAN SEISMIC SAFETY PROJECT

OAKLAND APPROACH STRUCTURES - PHASE I

EASTBOUND PIER DETAILS NO. 6

CU 04
EA 0120L1

Rev. Date 5-18-98

ORIGINAL SCALE IN MILLIMETERS FOR REDUCED PLANS 0 10 20 30 40 50 60 70 80 90 100

DISREGARD PRINTS BEARING EARLIER REVISION DATES

REVISION DATES (PRELIMINARY STAGE ONLY) 5/28/03 01/16/04 1/30/04 8/30/04 11/29/04 6/24/05 11/29/05 1/27/06 6/27/06 7/28/06

SHEET 78 OF 224

FILE => u:\BRIDGE\TY_10502\2009 CCOs\Pier Details CCO\04-012011-34-0006L-pierdet east67.dgn

USERNAME => T.LAN

DATE PLOTTED => 6/27/2009

TIME PLOTTED => 4:49:50 PM

Jun 3, 2009

DIST.	COUNTY	ROUTE	KILOMETER POST TOTAL PROJECT	SHEET NO.	TOTAL SHEETS
04	Ala	80	1.6/2.7	204R2	643

REGISTERED ENGINEER - CIVIL

1-29-07
PLANS APPROVAL DATE

MOHAN S. CHAR No. C057894 Exp. 6/30/08 CIVIL STATE OF CALIFORNIA

The State of California or its officers or agents shall not be responsible for the accuracy or completeness of electronic copies of this plan sheet.

T.Y. LIN / MOFFATT & NICHOL
TWO HARRISON STREET, SUITE 500
SAN FRANCISCO, CA 94105

LIM & NASCIMENTO ENGINEERING CORPORATION
12 MAUCHLY, BLDG L
IRVINE, CA 92618

To get to the Caltrans web site, go to: http://www.dot.ca.gov

LEGEND

- · Denotes regular reinforcement
- ∘ Denotes additional longitudinal reinforcement. See "Eastbound Deck Details No. 1" sheet. For additional girder stem reinf, see "Eastbound Girder Details" sheet
- * 60 mm Min and 100 mm Max Clr to stirrup (except 25 mm Min clear near anchorage)
- ** Distribution bars
- X Denotes bar spacing

MARK	DATE	DESCRIPTIONS	BY	CH'D
1	3/9/09	REVISED UTILITY OPENING SCHEDULE, LOCATIONS & NOTE 5	MSC	TWD
2	5/28/09	REVISED UTILITY OPENING LOCATION	MSC	TWD

REVISION(S)

CONTRACT CHANGE ORDER NO. 101 Supp #1
SHEET 4 OF 10

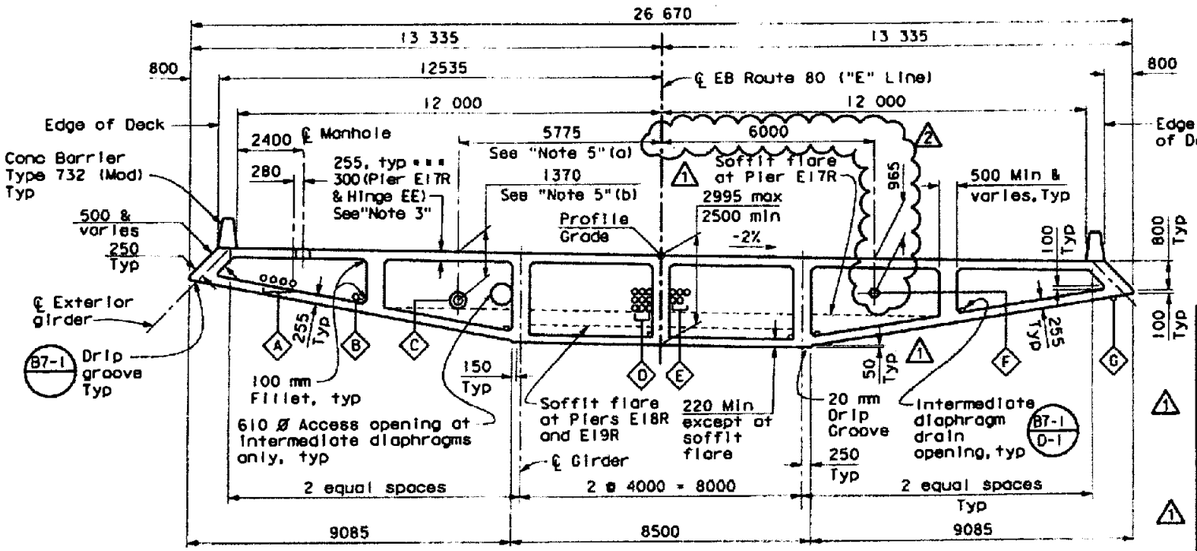

*** See "Eastbound Girder Layout No. 1" for transition of deck slab thickness

TYPICAL SECTION - HINGE EE TO HINGE FE

1:80

Note: Conduit Pattern Shown Near Pier E18R & E19R. For other locations, see "Eastbound Pier Details No. 4 & "Hinge EE Details No. 2 & 3" and "Eastbound Hinge FE Details No. 1" sheets.

UTILITY OPENING SCHEDULE

UTILITY DESCRIPTION	CONDUIT SIZE (mm)	CASING SIZE OD (mm)	PIER /DIAPHRAGM OPENING SIZE (mm)	HINGE OPENING SIZE (mm)
A Pipe sleeves for Electrical conduit #	5-103Ø (Hinge EE to Hinge FE & Pier E22R) 5- 103Ø & 3- 63Ø / 41Ø (Hinge FE to Pier E21R)	—	Cast-In-Place	Cast-In-Place
B Pipe sleeve for Electrical conduit #	1-103Ø	—	Cast-In-Place	Cast-In-Place
C CCSF Sewer line #	NPS 10 (Sewer) in NPS 18 Casing	460 Ø	Pier & Diaph 550 Ø except Diaph C & D	550 Ø
D Pipe sleeves for conduit #	12-103Ø (Hinge EE to Pier E17R) 9-103Ø (Pier E18R to Pier E21R)	—	Cast-In-Place	Cast-In-Place
E Pipe sleeves for Electrical Conduit (12Kv) #	5-103Ø	—	Cast-In-Place	Cast-In-Place
F Drain line	NPS 8 and NPS 10 *	—	250Ø and 300Ø *	None
G Air line	1-100Ø	—	None	None

* - See "Eastbound Girder Layout No. 1" sheet for size and locations.
\# - For conduit layout & details not shown, see "Electrical Plans".

STAMP IS VALID FOR REVISION 1 & 2 ONLY

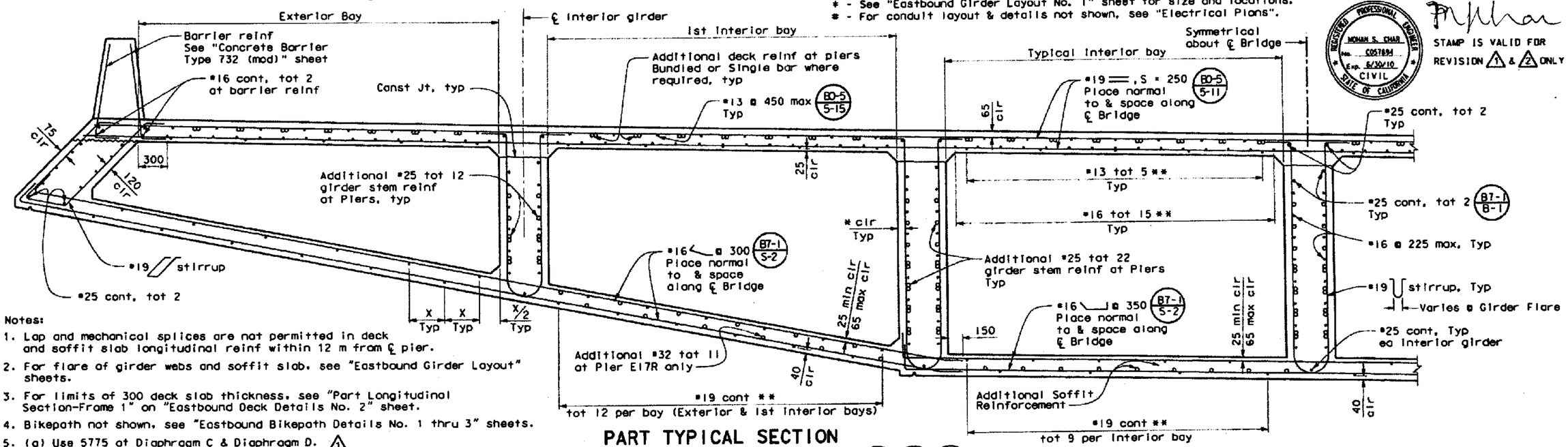

Notes:

1. Lap and mechanical splices are not permitted in deck and soffit slab longitudinal reinf within 12 m from ℄ pier.
2. For flare of girder webs and soffit slab, see "Eastbound Girder Layout" sheets.
3. For limits of 300 deck slab thickness, see "Part Longitudinal Section-Frame 1" on "Eastbound Deck Details No. 2" sheet.
4. Bikepath not shown, see "Eastbound Bikepath Details No. 1 thru 3" sheets.
5. (a) Use 5775 at Diaphragm C & Diaphragm D. (b) Use 1370 at Diaphragm C & Diaphragm D. 1
6. Anchorages and footholds at service platform not shown, see "SERVICE PLATFORMS - PLAN AND SECTIONS" sheet.

PART TYPICAL SECTION HINGE EE TO HINGE FE

1:20

B0-5 B7-1 B8-5

ALL DIMENSIONS ARE IN MILLIMETERS UNLESS OTHERWISE SHOWN

DESIGN OVERSIGHT: SAM AKRAD, FRANCISCO CARPIO, BERNARD CHAN, HAKIM EL-HATUR
SIGN OFF DATE 6/3/09

	BY	CHECKED
DESIGN	M. CHAR	T. DUDLEY
DETAILS	N. MORCILLO/M. ANDRASEK	M. CHAR
QUANTITIES	N. MORCILLO/Y. KIM	V. SIVAKOLUNDU/T. DUDLEY

PREPARED FOR THE STATE OF CALIFORNIA DEPARTMENT OF TRANSPORTATION

MOHAN S. CHAR
PROJECT ENGINEER

CU 04
EA 0120L1

BRIDGE NO. 34-0006L/R
KILOMETER POST 1.6

SAN FRANCISCO OAKLAND BAY BRIDGE
EAST SPAN SEISMIC SAFETY PROJECT

OAKLAND APPROACH STRUCTURES - PHASE I

EASTBOUND TYPICAL SECTION

DISREGARD PRINTS BEARING EARLIER REVISION DATES

SHEET 91 OF 224

Rev. Date: 5-18-98

ORIGINAL SCALE IN MILLIMETERS FOR REDUCED PLANS 0 10 20 30 40 50 60 70 80 90 100

FILE => U:\BRIDGE\TYL10502\2009 CCDS\Hinge EE Details CCO\04-0120L1-34-0006L-typsec east7.dgn

DATE PLOTTED => 6/2/2009 TIME PLOTTED => 6:41:18 PM

Jun 3, 2009

Notes:

1. For Deck prestressing details, see "Eastbound Deck Details No. 2" sheet.
2. For girders (A), (B), (K), & (L), see "Girder Layout Details No. 2" sheet. (2)
3. Structure depth varies linearly from Hinge EE to Hinge FE.
4. Intermediate diaphragms to be placed radially. Dimensions shown are measured along ℄ EB Route 80.
5. For Utility information, see table on "Eastbound Typical Section" sheet.
6. For Access Openings & Electrical Blockouts, see "Eastbound Girder Layout No. 1A" sheet.
7. For Prestressing Notes, see "Eastbound Girder Layout No. 2" sheet.
8. For electrical conduit layout details and Loop Detector details, see "Electrical Plans".
9. For mechanical layout and pipe support details, see "Mechanical Plans".
10. For Utilities designation, see "Eastbound Typical Section" sheet.
11. See "Service Platform Details".
12. Girder opening locations are shown on "Eastbound Girder Layout No. 1A" sheet. (2)
13. Preformed Loop Detector will be cast with the deck and pullbox will be provided as stated on Preformed Loop Schedule as shown on "Roadway Plans".
14. For Additional Hair Pin reinforcement around ducts, see "Detail 2" on "Eastbound Hinge EE Details No. 5" sheet.

Caltrans Metric

DIST.	COUNTY	ROUTE	KILOMETER POST TOTAL PROJECT	SHEET NO.	TOTAL SHEETS
04	Ala	80	1.6/2.7	211R3	643

REGISTERED ENGINEER - CIVIL

1-29-07
PLANS APPROVAL DATE

REGISTERED PROFESSIONAL ENGINEER MOHAN S. CHAR No. C057894 Exp. 6/30/08 CIVIL STATE OF CALIFORNIA

The State of California or its officers or agents shall not be responsible for the accuracy or completeness of electronic copies of this plan sheet.

T.Y. LIN / MOFFATT & NICHOL
TWO HARRISON STREET, SUITE 500
SAN FRANCISCO, CA 94105

LIM & NASCIMENTO ENGINEERING CORPORATION
12 MAUCHLY, BLDG L
IRVINE, CA 92618

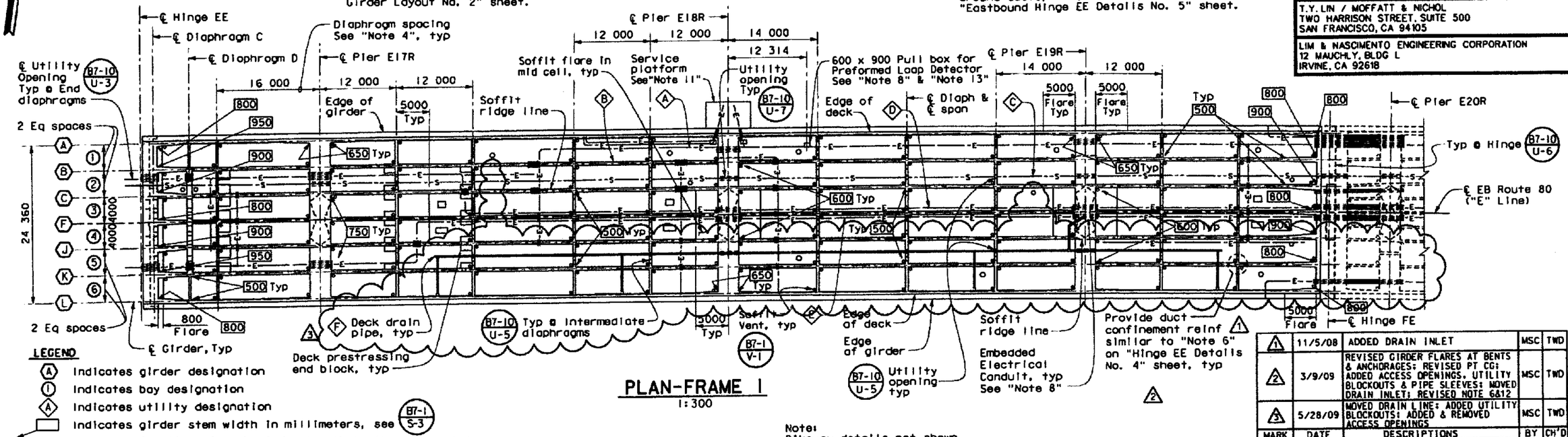

LEGEND

- (A) indicates girder designation
- (1) indicates bay designation
- (A) indicates utility designation
- indicates girder stem width in millimeters, see B7-1 S-3
- 0.5 L1 indicates fraction of each girder length in the span noted
- indicates embedded PVC rigid metallic conduit or pipe sleeves

PLAN-FRAME 1

1:300

Note:
Bikeway details not shown, see "Eastbound Bikepath Details No. 2" sheet.

MARK	DATE	DESCRIPTIONS	BY	CH'D
1	11/5/08	ADDED DRAIN INLET	MSC	TWD
2	3/9/09	REVISED GIRDER FLARES AT BENTS & ANCHORAGES; REVISED PT CG; ADDED ACCESS OPENINGS, UTILITY BLOCKOUTS & PIPE SLEEVES; MOVED DRAIN INLET; REVISED NOTE 6&12	MSC	TWD
3	5/28/09	MOVED DRAIN LINE; ADDED UTILITY BLOCKOUTS; ADDED & REMOVED ACCESS OPENINGS	MSC	TWD

REVISION(S)

CONTRACT CHANGE ORDER NO. 101 Supp #1
SHEET 5 OF 10

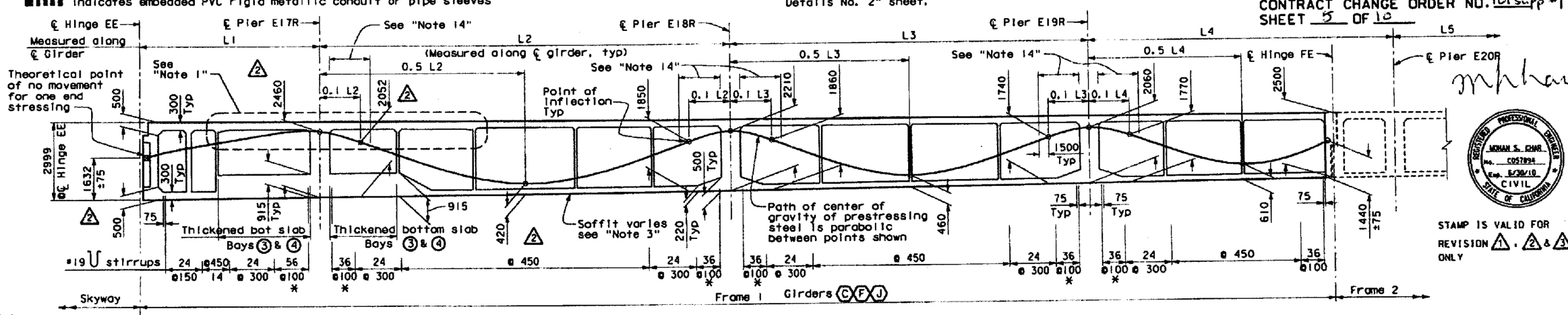

Note:
The Contractor shall verify all controlling field dimensions before ordering or fabricating any material.

* (2 Bundled)

LONGITUDINAL SECTION-FRAME 1

No Scale

ALL DIMENSIONS ARE IN MILLIMETERS UNLESS OTHERWISE SHOWN

STAMP IS VALID FOR REVISION (1), (2) & (3) ONLY

REGISTERED PROFESSIONAL ENGINEER MOHAN S. CHAR No. C057894 Exp. 6/30/10 CIVIL STATE OF CALIFORNIA

SAN FRANCISCO OAKLAND BAY BRIDGE
EAST SPAN SEISMIC SAFETY PROJECT

OAKLAND APPROACH STRUCTURES - PHASE I

EASTBOUND GIRDER LAYOUT NO. 1

DESIGN OVERSIGHT: SAM AKRAD, FRANCISCO CARPIO, BERNARD CHAN, HASAN EL-HATUR
SIGN OFF DATE: 6/3/09

	BY	CHECKED
DESIGN	M. CHAR	T. DUDLEY
DETAILS	N. MORCILLO/M. ANDRASEK	M. CHAR
QUANTITIES	N. MORCILLO/Y. KIM	V. SIVAKOLUNDU/T. DUDLEY

PREPARED FOR THE STATE OF CALIFORNIA DEPARTMENT OF TRANSPORTATION

MOHAN S. CHAR
PROJECT ENGINEER

BRIDGE NO. 34-0006L/R
KILOMETER POST 1.6

CU 04
EA 0120L1

DISREGARD PRINTS BEARING EARLIER REVISION DATES

REVISION DATES (PRELIMINARY STAGE ONLY): 5/18/05 8/30/05 1/30/06 2/28/06 3/28/06 6/28/06 11/30/06 12/28/06 1/31/07 2/28/07 1/28/08

SHEET 98 OF 224

Rev. Date 5-18-98

ORIGINAL SCALE IN MILLIMETERS FOR REDUCED PLANS 0 10 20 30 40 50 60 70 80 90 100

FILE => U:\BRIDGE\TYL10502\2009 CCO's\Deck access CCO\04 0120L1-34-006 1-exit to east r3.dgn

DATE PLOTTED => 6/2/2009 TIME PLOTTED => 4:37:29 PM USERNAME => LAN

un 3,2009

DIST	COUNTY	ROUTE	KILOMETER POST TOTAL PROJECT	SHEET NO.	TOTAL SHEETS
04	Ala	80	1.6/2.7	211S1R2	643

REGISTERED ENGINEER - CIVIL
3-9-09
PLANS APPROVAL DATE
The State of California or its officers or agents shall not be responsible for the accuracy or completeness of electronic copies of this plan sheet.

T.Y. LIN / MOFFATT & NICHOL
TWO HARRISON STREET, SUITE 500
SAN FRANCISCO, CA 94105

LIM & NASCIMENTO ENGINEERING CORPORATION
20 EMPIRE DRIVE
LAKE FOREST, CA 92630

MARK	DATE	DESCRIPTION	BY	CH'D
2	5/28/09	MOVED DRAIN LINE; ADDED UTILITY BLOCKOUTS; ADDED & REMOVED ACCESS OPENINGS	MSC	TWD
1	4/21/09	ADJUSTED PIPE SLEEVE LOCATIONS LATERALLY; REVISED DIMENSION CALLOUTS	MSC	TWD

REVISION(S)

CONTRACT CHANGE ORDER NO. 101 Supp #1
SHEET 6 OF 10

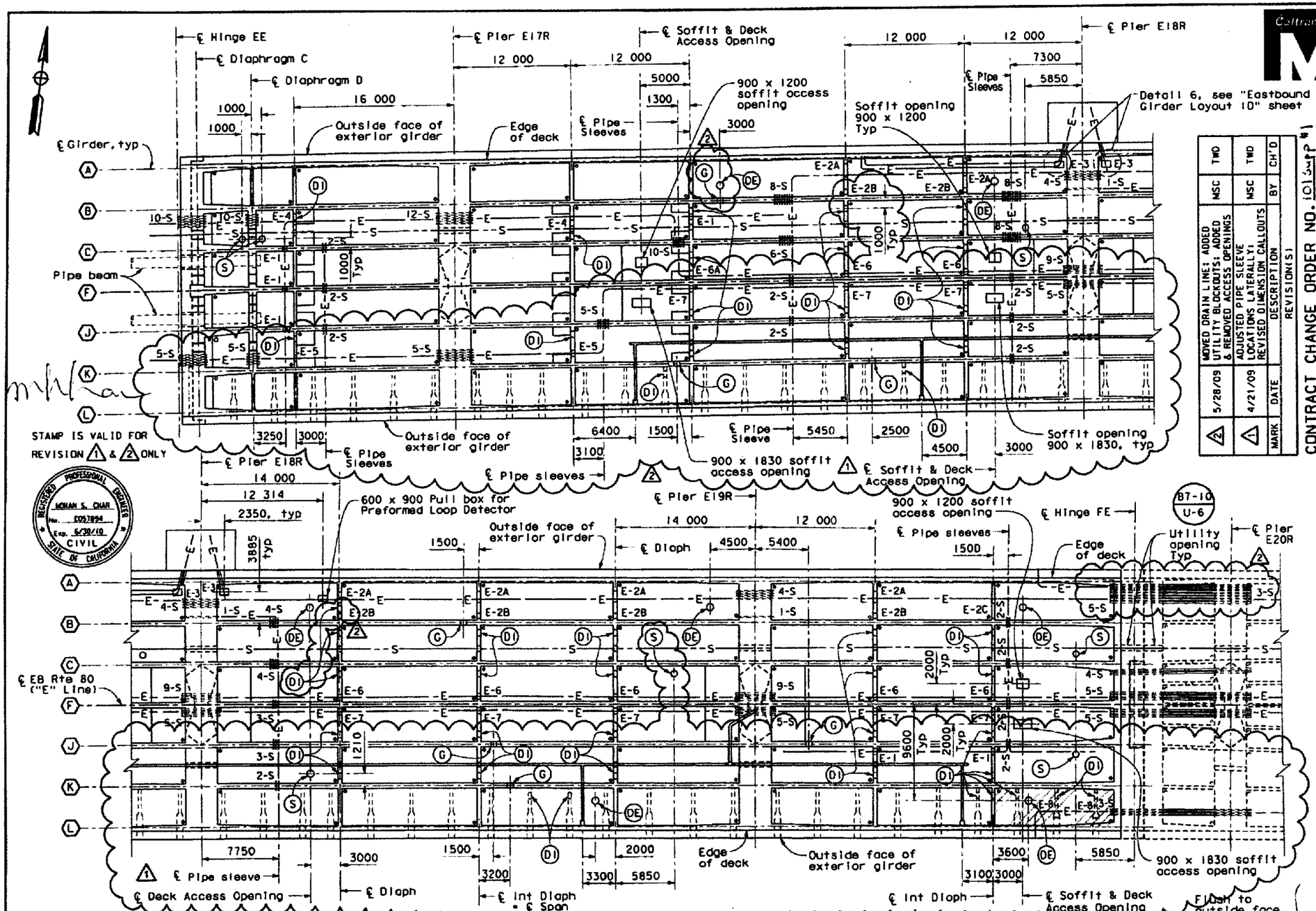

LEGEND

- (A) indicates girder designation
- (DI) indicates 600 mm ø diaphragm access opening (B7-10 / U-5)
- (G) indicates 600 mm ø girder access opening (B7-11 / U-41)
- (S) indicates 610 mm ø grated soffit access opening
- (DE) indicates 600 mm ø deck access opening (B7-11 / U-43)
- E-# indicates Blockout opening type
- # -S # of Pipe sleeves Rigid PVC Sch 80

BLOCKOUT TYPE	BLOCKOUT SIZE	
E-1	500 × 200	
E-2A	1100 × 200	E-2B: 500 × 200
E-2C	1500 × 200	
E-3	900 × 500	Soffit Blockout
E-4	1200 × 800	
E-5	1200 × 200	
E-6	800 × 800	E-6A: 800 × 1100
E-7	800 × 500	E-8 ** 1200 × 300
	168 mm OD Rigid PVC Sch 80*	

* Exception: At Hinge FE, 171 mm OD embedded metallic pipe sleeves for 103 mm RGS conduit will be installed and 91 mm OD for 41 mm RGS conduit.

** For E-8 blockout detail, see "Eastbound Bike Details No. 2" sheet.

ALL DIMENSIONS ARE IN MILLIMETERS UNLESS OTHERWISE SHOWN

LEGEND (cont'd)
Indicates smooth trowel finish soffit slab

SUPPLEMENTAL SHEET
CONTRACT CHANGE ORDER NO. 101 Supp #1
SHEET 6 OF 10

ACCESS OPENINGS & ELECTRICAL BLOCKOUTS
PLAN - FRAME 1
1:200

Note: The Contractor shall verify all controlling field dimensions before ordering or fabricating any material.

DESIGN OVERSIGHT: SAM AKKAD, FRANCISCO CARPIO, BERNARD CHAN, HASAN EL-NATUR — 6/3/09
SIGN OFF DATE

	BY	CHECKED
DESIGN	M. CHAR	T. DUDLEY
DETAILS	M. ANDRASEK	M. CHAR
QUANTITIES	N. MORCILLO/Y. KIM	V. SIVAKOLUNDU/T. DUDLEY

PREPARED FOR THE STATE OF CALIFORNIA DEPARTMENT OF TRANSPORTATION

MOHAN S. CHAR
PROJECT ENGINEER

CU 04
EA 0120L1

BRIDGE NO. 34-0006L/R
KILOMETER POST 1.6

SAN FRANCISCO OAKLAND BAY BRIDGE
EAST SPAN SEISMIC SAFETY PROJECT

OAKLAND APPROACH STRUCTURES - PHASE I

EASTBOUND GIRDER LAYOUT NO. 1A

DISREGARD PRINTS BEARING EARLIER REVISION DATES 3/9/09
REVISION DATES (PRELIMINARY STAGE ONLY)
SHEET 98S1 OF 224

ORIGINAL SCALE IN MILLIMETERS FOR REDUCED PLANS 0 10 20 30 40 50 60 70 80 90 100

Rev. Date 5-18-06

FILE => U:\BRIDGE\TYL10502\2009 CCOs\Deck access CCO\04-012011-34-006-1-xglr-1a-eastlasr2.dgn

DATE PLOTTED => 6/2/2009 TIME PLOTTED => 12:38:3 PM

Jun 3, 2009

SUPPLEMENTAL SHEET
CONTRACT CHANGE ORDER NO. 101 Supp #1
SHEET 7 OF 10

STAMP IS VALID FOR REVISION 1 & 2 ONLY

MARK	DATE	DESCRIPTION	BY	CH'D
1	4/21/09	ADJUSTED PIPE SLEEVE LOCATIONS LATERALLY: MOVED DIMENSION CALLOUTS	MSC	TWD
2	6/1/09	REMOVED GIRDER ACCESS OPENING	MSC	TWD
REVISION(S)				

CONTRACT CHANGE ORDER NO. 101 Supp #1
SHEET 7 OF 10

REGISTERED PROFESSIONAL ENGINEER MOHAN S. CHAR No. C057894 Exp. 6/30/10 CIVIL STATE OF CALIFORNIA

Notes:

1. Locations of LOL of top and bottom prestressing ducts as shown are approximate. Contractor shall field verify.
2. Adjust vertical location of the pipe sleeves in the field to avoid conflict with prestressing ducts as approved by the Engineer.
3. For reinforcement around pipe sleeves, blockout and girder access openings, see "Eastbound Girder Layout No. 1D" supplemental sheet.

LEGEND

#-S Indicates # of Pipe Sleeves or Rigid PVC Sch 80

E-1 Indicates 400 mm x 200 mm Blockout opening

(G) Indicates 600 mm ø girder access opening (B7-11 / U-41)

Caltrans Metric

DIST.	COUNTY	ROUTE	KILOMETER POST TOTAL PROJECT	SHEET NO.	TOTAL SHEETS
04	Ala	80	1.6/2.7	211S282	643

REGISTERED ENGINEER - CIVIL
3-9-09
PLANS APPROVAL DATE
The State of California or its officers or agents shall not be responsible for the accuracy or completeness of electronic copies of this plan sheet.

T.Y. LIN / MOFFATT & NICHOL
TWO HARRISON STREET, SUITE 500
SAN FRANCISCO, CA 94105

LIM & NASCIMENTO ENGINEERING CORPORATION
20 EMPIRE DRIVE
LAKE FOREST, CA 92630

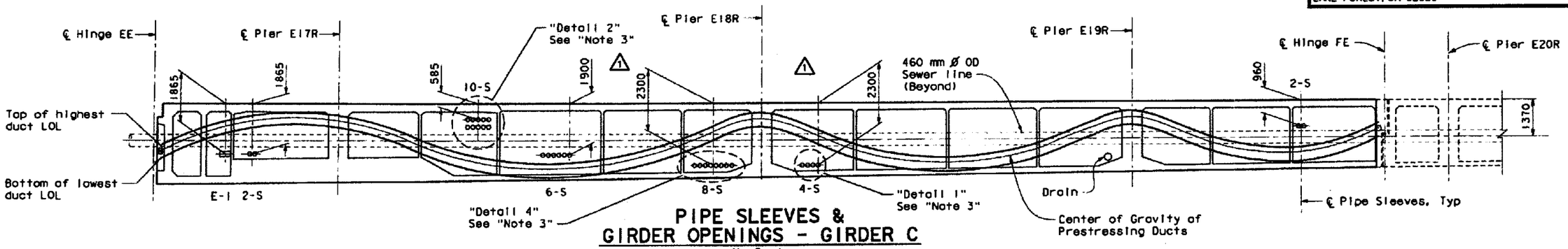

PIPE SLEEVES & GIRDER OPENINGS - GIRDER C

No Scale

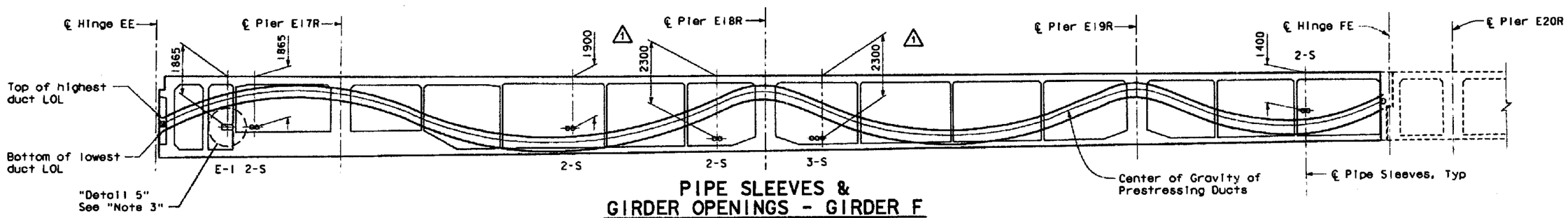

PIPE SLEEVES & GIRDER OPENINGS - GIRDER F

No Scale

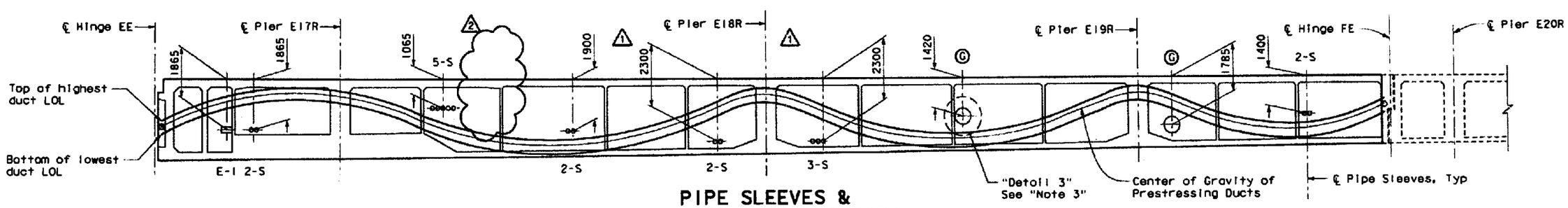

PIPE SLEEVES & GIRDER OPENINGS - GIRDER J

No Scale

Note: The Contractor shall verify all controlling field dimensions before ordering or fabricating any material.

ALL DIMENSIONS ARE IN MILLIMETERS UNLESS OTHERWISE SHOWN

SAN FRANCISCO OAKLAND BAY BRIDGE
EAST SPAN SEISMIC SAFETY PROJECT

OAKLAND APPROACH STRUCTURES - PHASE I

EASTBOUND GIRDER LAYOUT NO. 1B

DESIGN OVERSIGHT: SAM AKRAD, FRANCISCO CARPIO, BERNARD CHAN, HASAN EL-NATUR
SIGN OFF DATE 6/3/09

	BY	CHECKED
DESIGN	M. CHAR	T. DUDLEY
DETAILS	M. ANDRASEK	M. CHAR
QUANTITIES	N. MORCILLO/Y. KIM	V. SIVAKOLUNDU/T. DUDLEY

PREPARED FOR THE STATE OF CALIFORNIA DEPARTMENT OF TRANSPORTATION

MOHAN S. CHAR
PROJECT ENGINEER

BRIDGE NO. 34-0006L/R
KILOMETER POST 1.6

CU 04
EA 0120L1

DISREGARD PRINTS BEARING EARLIER REVISION DATES

REVISION DATES (PRELIMINARY STAGE ONLY): 3/9/09

SHEET 98S2 OF 224

Rev. Date: 8-18-08

ORIGINAL SCALE IN MILLIMETERS FOR REDUCED PLANS 0 10 20 30 40 50 60 70 80 90 100

\BRIDGE\TYL10502\2009 CCOs\Girder CCO\04-0120L1-34-006-1-xgir-1b-eastlos2r2.dgn

USERNAME => LAN
DATE PLOTTED => 6/9/2009
TIME PLOTTED => 11:45:18 PM

Jun 3, 2009

DIST.	COUNTY	ROUTE	KILOMETER POST TOTAL PROJECT	SHEET NO.	TOTAL SHEETS
04	Ala	80	1.6/2.7	2115S3R2	643

REGISTERED ENGINEER - CIVIL

3-9-09

PLANS APPROVAL DATE

The State of California or its officers or agents shall not be responsible for the accuracy or completeness of electronic copies of this plan sheet.

T.Y. LIN / MOFFATT & NICHOL
TWO HARRISON STREET, SUITE 500
SAN FRANCISCO, CA 94105

LIM & NASCIMENTO ENGINEERING CORPORATION
20 EMPIRE DRIVE
LAKE FOREST, CA 92630

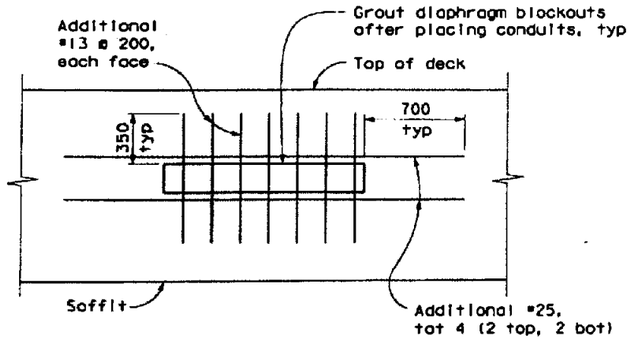

Note: For blockouts wider than 1000 mm only.

DIAPHRAGM ELECTRICAL BLOCKOUT DETAIL

No Scale

Notes:

1. Locations of LOL of top and bottom prestressing ducts as shown are approximate. Contractor shall field verify.
2. Adjust vertical location of the pipe sleeves in the field to avoid conflict with prestressing ducts as approved by the Engineer.
3. For reinforcement around pipe sleeves, blockout and girder access openings, see "Eastbound Girder Layout No. 1D" supplemental sheet.

LEGEND

#-S Indicates # of Pipe Sleeves or Rigid PVC Sch 80

(G) Indicates 600 mm ø girder access opening (B7-11 / U-41)

(DR) Indicates 250 mm ø drain line opening (B7-10 / U-5)

STAMP IS VALID FOR REVISION 1 & 2 ONLY

MARK	DATE	DESCRIPTIONS	BY	CH'D
1	4/21/09	ADJUSTED PIPE SLEEVE LOCATIONS LATERALLY; MOVED DIMENSION CALLOUTS	MSC	TWD
2	5/28/09	ADDED DRAIN LINE OPENING LOCATIONS; MOVED & ADDED GIRDER ACCESS OPENING	MSC	TWD

REVISION(S)

CONTRACT CHANGE ORDER NO. 101 Supp #1
SHEET 8 OF 10

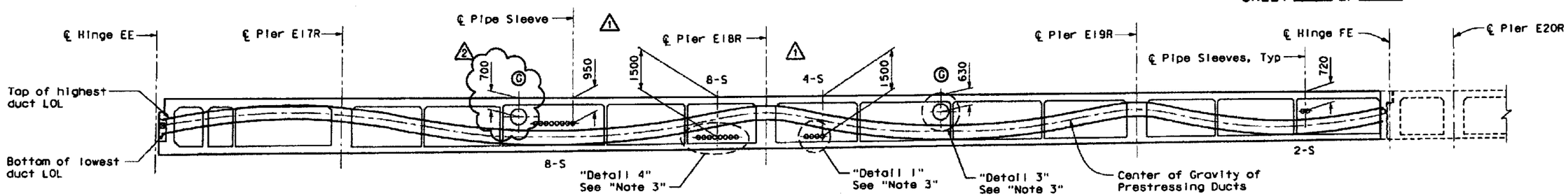

PIPE SLEEVES & GIRDER OPENINGS - GIRDER B

No Scale

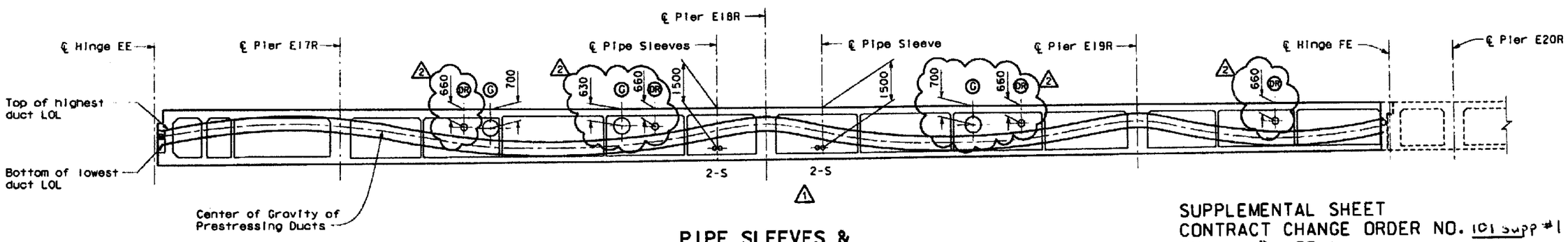

PIPE SLEEVES & GIRDER OPENINGS - GIRDER K

No Scale

SUPPLEMENTAL SHEET
CONTRACT CHANGE ORDER NO. 101 Supp #1
SHEET 8 OF 10

Note: The Contractor shall verify all controlling field dimensions before ordering or fabricating any material.

ALL DIMENSIONS ARE IN MILLIMETERS UNLESS OTHERWISE SHOWN

SAN FRANCISCO OAKLAND BAY BRIDGE
EAST SPAN SEISMIC SAFETY PROJECT

OAKLAND APPROACH STRUCTURES - PHASE I

EASTBOUND GIRDER LAYOUT NO. 1C

DESIGN OVERSIGHT: SAM AKKAD, FRANCISCO CARPIO, BERNARD CHAN, NASAM EL-MATUR
SIGN OFF DATE 6/3/09

	BY	CHECKED
DESIGN	M. CHAR	T. DUDLEY
DETAILS	M. ANDRASEK	M. CHAR
QUANTITIES	N. MORCILLO/Y. KIM	V. SIVAKOLUNDU/T. DUDLEY

PREPARED FOR THE STATE OF CALIFORNIA DEPARTMENT OF TRANSPORTATION

MOHAN S. CHAR, PROJECT ENGINEER

BRIDGE NO. 34-0006L/R
KILOMETER POST 1.6

CU 04
EA 0120L1

DISREGARD PRINTS BEARING EARLIER REVISION DATES

REVISION DATES (PRELIMINARY STAGE ONLY): 3/9/09

SHEET 98S3 OF 224

Rev. Date 5-18-98

ORIGINAL SCALE IN MILLIMETERS FOR REDUCED PLANS 0 10 20 30 40 50 60 70 80 90 100

FILE => u:\BR-DGE\TYL10502\2009 CCOs\Girder CCO\04-0120L1-34-006-1-xglr-1c-east1of53r2.dgn

DATE PLOTTED => 6/22/2009 TIME PLOTTED => 11:45:39 PM

USERNAME => LAN

Jun 3, 2009

DIST.	COUNTY	ROUTE	KILOMETER POST TOTAL PROJECT	SHEET NO.	TOTAL SHEETS
04	Ala	80	1.6/2.7	292R4	643

REGISTERED ENGINEER - CIVIL
1-29-07
PLANS APPROVAL DATE
The State of California or its officers or agents shall not be responsible for the accuracy or completeness of electronic copies of this plan sheet.

T.Y. LIN / MOFFATT & NICHOL
TWO HARRISON STREET, SUITE 500
SAN FRANCISCO, CA 94105

LIM & NASCIMENTO ENGINEERING CORPORATION
12 MAUCHLY, BLDG L
IRVINE, CA 92618

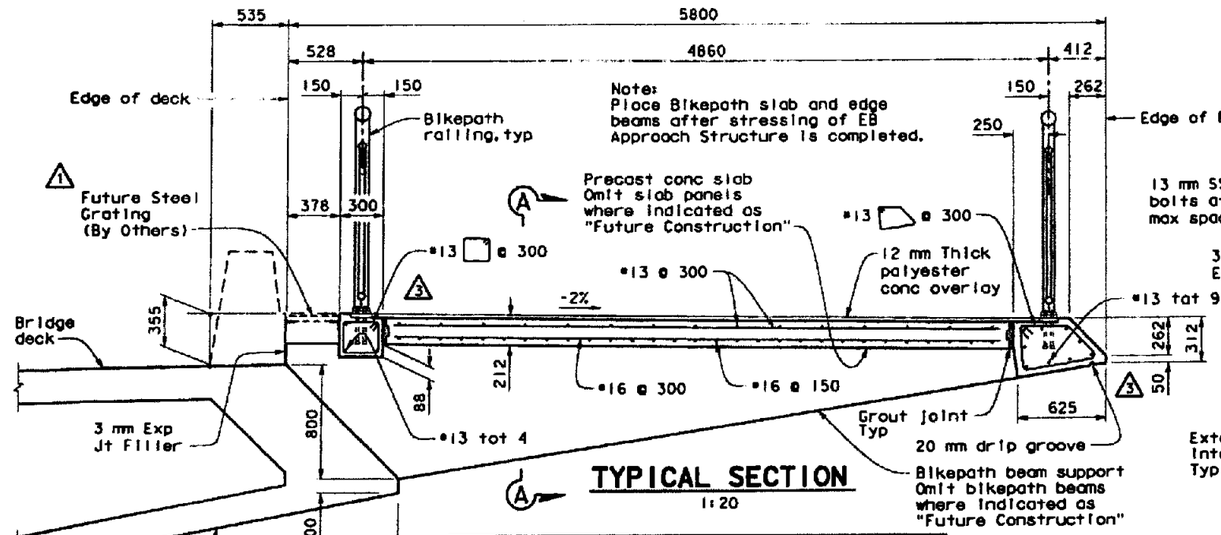

TYPICAL SECTION
1:20

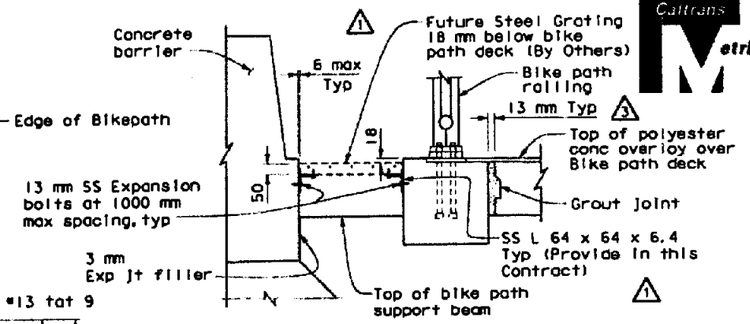

BIKEPATH GRATING DETAIL
1:10

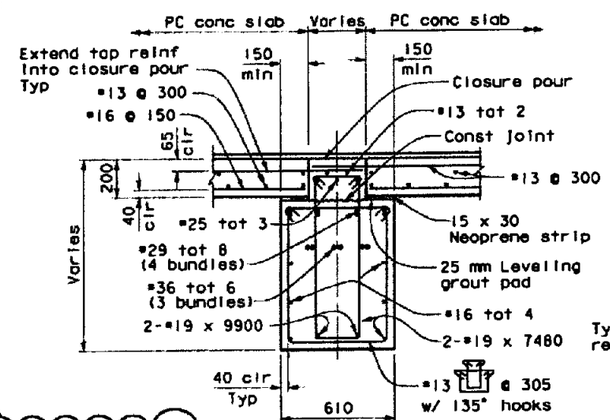

SECTION A-A
1:15

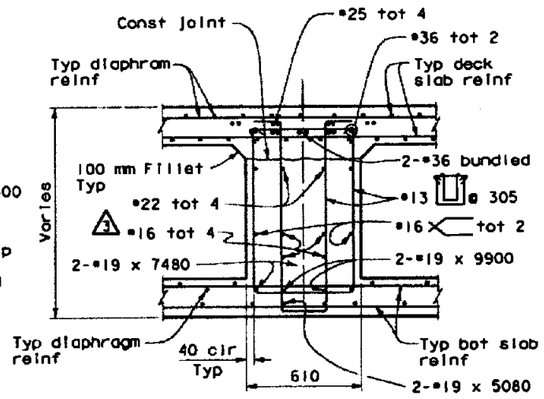

SECTION B-B
1:15

MARK	DATE	DESCRIPTIONS	BY	CH'D
1	5/13/08	FIBERGLASS GRATING CHANGED TO STEEL GRATING	MSC	TWD
2	3/9/09	ADDED DECK ACCESS OPENING; ADDED DIAPHRAGM OPENINGS	MSC	TWD
3	4/15/09	ADDED SERVICE COUPLER & REBAR CALLOUTS; CORRECTED CALLOUTS; REVISED GROUT JOINT	HL	MSC
4	5/28/09	ADDED UTILITY BLOCKOUT; REMOVED DIAPHRAGM OPENING	MSC	TWD

REVISION(S)

STAMP IS VALID FOR REVISION 1, 2, 3 & 4 ONLY

REGISTERED PROFESSIONAL ENGINEER MOHAN S. CHAR No. C057894 Exp. 6/30/10 CIVIL STATE OF CALIFORNIA

CONTRACT CHANGE ORDER NO. 101 SUPP #1
SHEET 9 OF 10

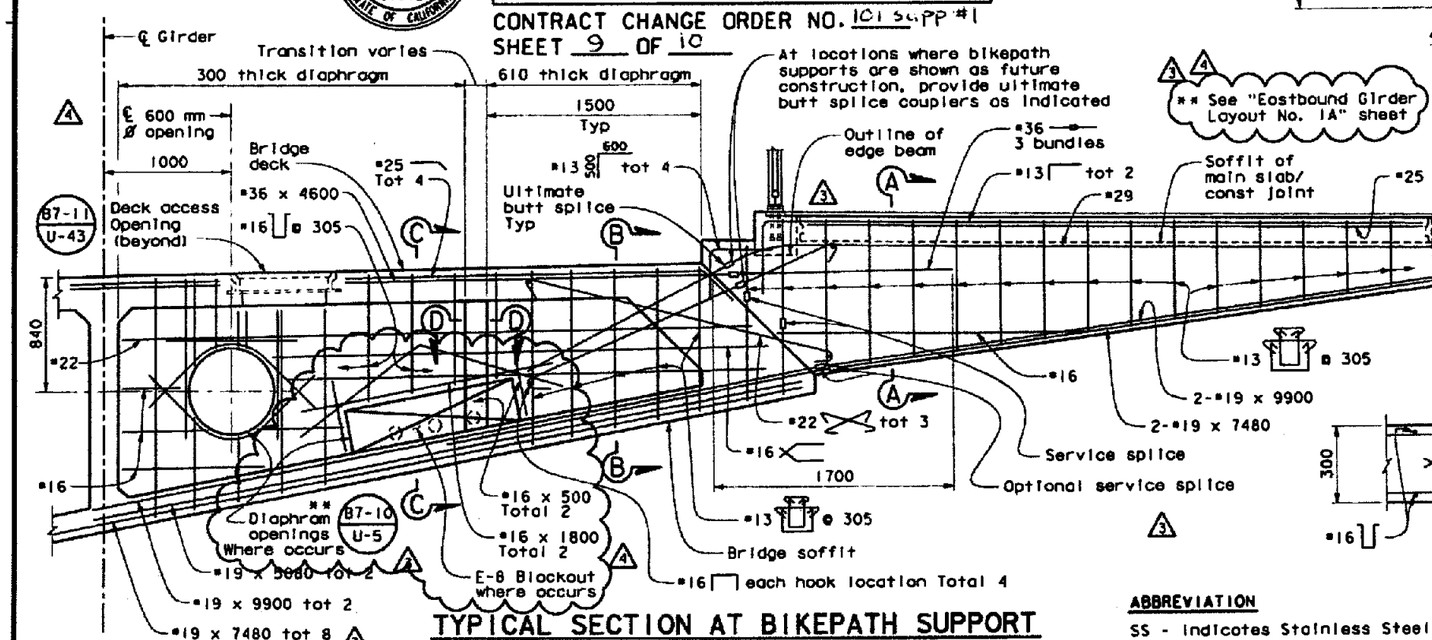

TYPICAL SECTION AT BIKEPATH SUPPORT
1:20

** See "Eastbound Girder Layout No. 1A" sheet

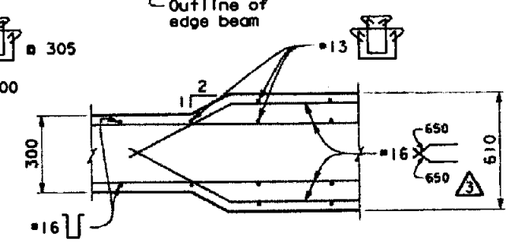

SECTION D-D
1:15

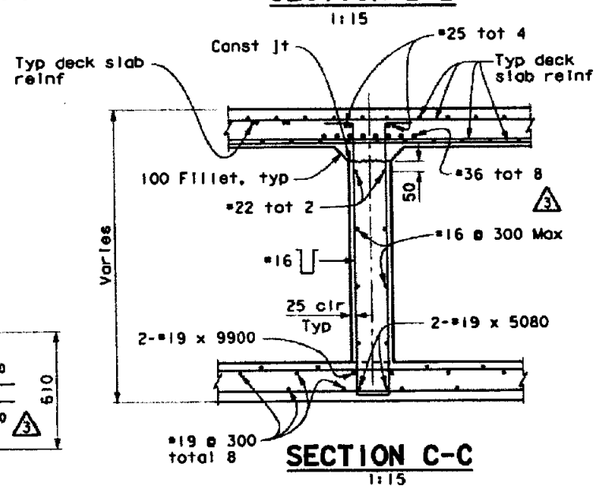

SECTION C-C
1:15

ABBREVIATION

SS - Indicates Stainless Steel

ALL DIMENSIONS ARE IN MILLIMETERS UNLESS OTHERWISE SHOWN

DESIGN OVERSIGHT
SAM AKRAD FRANCISCO CAMPIO BERNARD CHAN HASAN EZ-NATUR
8-10-06
SIGN OFF DATE

	BY	CHECKED
DESIGN	M. CHAR	T. DUDLEY
DETAILS	N. MORCILLO/M. ANDRASEK	M. CHAR
QUANTITIES	N. MORCILLO/Y. KIM	V. SIVAKOLUNDU/T. DUDLEY

PREPARED FOR THE STATE OF CALIFORNIA DEPARTMENT OF TRANSPORTATION

MOHAN S. CHAR
PROJECT ENGINEER

BRIDGE NO. 34-0006L/R
KILOMETER POST 1.6

SAN FRANCISCO OAKLAND BAY BRIDGE
EAST SPAN SEISMIC SAFETY PROJECT

OAKLAND APPROACH STRUCTURES - PHASE I

EASTBOUND BIKEPATH DETAILS NO. 2

CU 04
EA 0120L1

DISREGARD PRINTS BEARING EARLIER REVISION DATES

REVISION DATES (PRELIMINARY STAGE ONLY)

SHEET 179 OF 224

Rev. Date: 5-10-98

ORIGINAL SCALE IN MILLIMETERS FOR REDUCED PLANS 0 10 20 30 40 50 60 70 80 90 100

FILE => 04-012011-34-006-us-bikedet-east2.dgn

USERNAME => AN DATE PLOTTED => 6/2/2009 TIME PLOTTED => 4:34:44 PM

Jun 3, 2009

To get to the Caltrans web site, go to: http://www.dot.ca.gov

DIST.	COUNTY	ROUTE	KILOMETER POST TOTAL PROJECT	SHEET NO.	TOTAL SHEETS
04	Ala	80	1.6/2.7	303R2	643

REGISTERED ENGINEER - CIVIL

1-29-07
PLANS APPROVAL DATE

REGISTERED PROFESSIONAL ENGINEER MOHAN S. CHAR No. C057894 Exp. 6/30/08 CIVIL STATE OF CALIFORNIA

The State of California or its officers or agents shall not be responsible for the accuracy or completeness of electronic copies of this plan sheet.

T.Y. LIN / MOFFATT & NICHOL
TWO HARRISON STREET, SUITE 500
SAN FRANCISCO, CA 94105

LIM & NASCIMENTO ENGINEERING CORPORATION
12 MAUCHLY, BLDG L
IRVINE, CA 92618

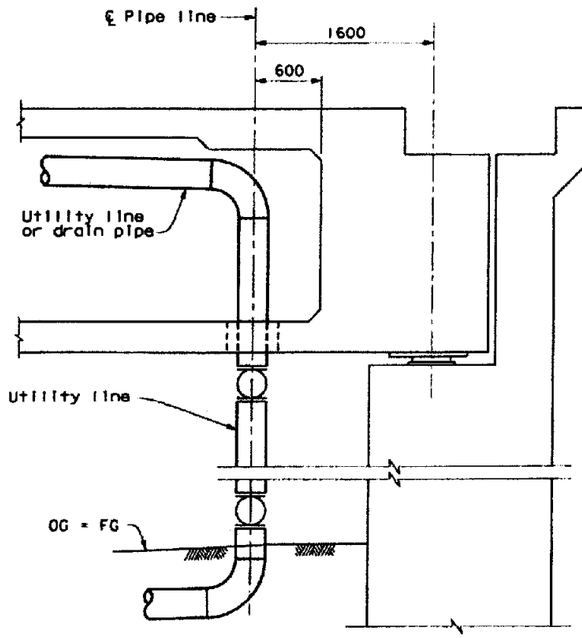

SECTION A-A
1:25

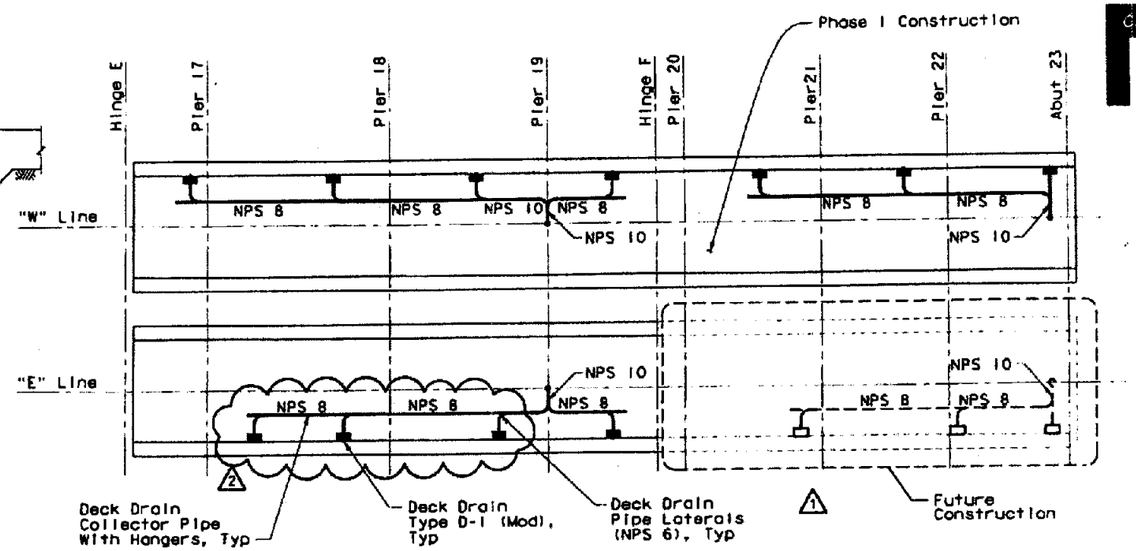

SCHEMATIC DECK DRAIN LAYOUT
No Scale

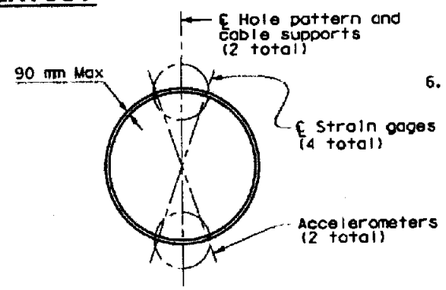

SECTION B-B

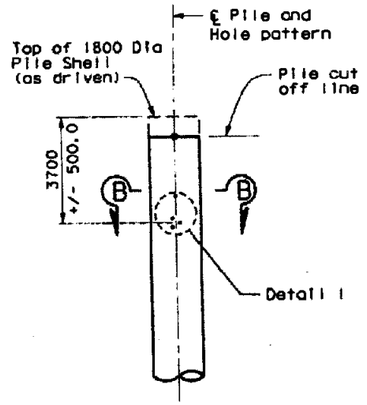

MONITORING INSTRUMENTS

NOTES:

1. For deck drain stationing, see "Westbound or Eastbound Structure Plan No. 1 & No. 2" sheets.
2. For pipe supports, see "Mechanical Plan" sheet.
3. Two set of instrument mounting holes are required oppositely spaced around the pile circumference.
4. Locate all instrument mounting holes at least 70 mm clear of longitudinal and circumferential pile fabrication welds.
5. Drill 1/2" Dia instrument mounting holes 25 mm deep and thread using a 1/4", 20 threads per inch tap. The units used for the threaded holes are in English units to match with existing state furnished equipment.
6. See "Miscellaneous Details No. 3" sheet.

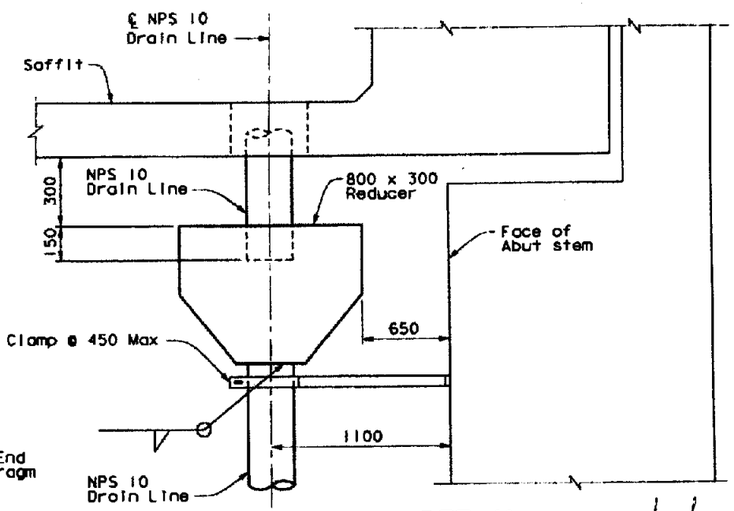

DRAIN LINE DETAIL
No Scale

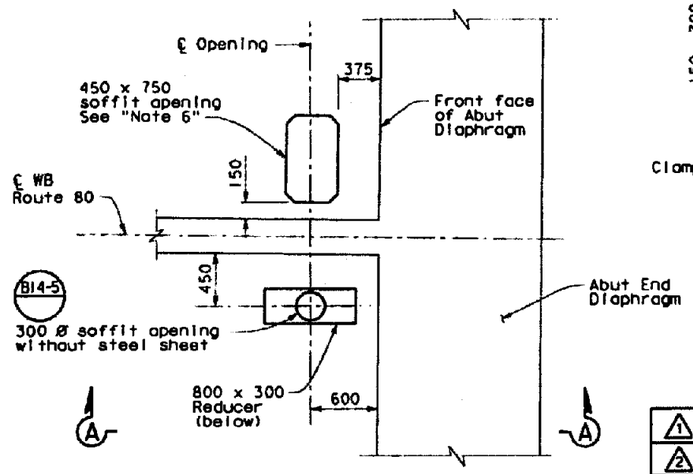

DETAIL 2
1:25

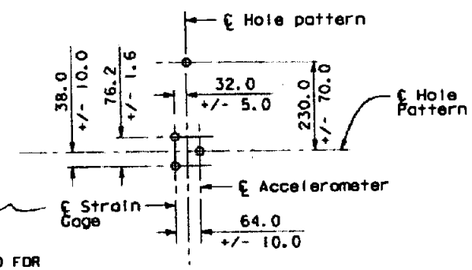

DETAIL 1

Shown from outside of pile. See Notes 3 through 5 for details of threaded holes.

MARK	DATE	DESCRIPTIONS	BY	CH'D
1	11/5/08	ADDED DRAIN INLET	MSC	TWD
2	5/28/09	MOVED DECK DRAINS IN SCHEMATIC	MSC	TWD

REVISION(S)

CONTRACT CHANGE ORDER NO. 101 Supp #1
SHEET 10 OF 10

REGISTERED PROFESSIONAL ENGINEER MOHAN S. CHAR No. C057894 Exp. 6/30/10 CIVIL STATE OF CALIFORNIA

STAMP IS VALID FOR REVISION 1 & 2 ONLY

ALL DIMENSIONS ARE IN MILLIMETERS UNLESS OTHERWISE SHOWN

DYNAMIC MONITORING MOUNTING HOLE DETAILS
No Scale

SAN FRANCISCO OAKLAND BAY BRIDGE
EAST SPAN SEISMIC SAFETY PROJECT

OAKLAND APPROACH STRUCTURES - PHASE I

MISCELLANEOUS DETAILS NO. 4

DESIGN OVERSIGHT: SAM ARKAD, FRANCISCO CARPIO, BERNARD CHAN, HASAN-EL-NATUR — SIGN OFF DATE 6/3/09

	BY	CHECKED
DESIGN	M. CHAR	T. DUDLEY
DETAILS	N. MORCILLO/M. ANDRASEK	M. CHAR
QUANTITIES	N. MORCILLO/Y. KIM	V. SIVAKOLUNDU/T. DUDLEY

PREPARED FOR THE STATE OF CALIFORNIA DEPARTMENT OF TRANSPORTATION

MOHAN S. CHAR, PROJECT ENGINEER

CU 04
EA 0120L1

BRIDGE NO. 34-0006L/R
KILOMETER POST 1.6

DISREGARD PRINTS BEARING EARLIER REVISION DATES

REVISION DATES (PRELIMINARY STAGE ONLY)									SHEET	OF
5/18/03	0/00/03	8/29/04	6/28/04	2/10/05	5/20/05	11/10/05	1/31/06	4/13/06	1/28/06	190	224

Rev. Date: 3-18-98

ORIGINAL SCALE IN MILLIMETERS FOR REDUCED PLANS 0 10 20 30 40 50 60 70 80 90 100

FILE => U:\BRIDGE\TYL10502\2009 CCOs\Drain Inlet CCO\04-012011-34-006-LU-misc4r2.dgn

DATE PLOTTED => 6/27/2009 TIME PLOTTED => 14:42:13 PM JS-HAVP => LAN

un 3,2009

STATE OF CALIFORNIA - DEPARTMENT OF TRANSPORTATION

CONTRACT CHANGE ORDER MEMORANDUM

DATE: 12/30/2009 Page 1 of 1

TO: AMER BATA / BEN GHAFGHAZI	FILE: E.A. 04 - 0120L4
FROM: BEN GHAFGHAZI	CO-RTE-PM ALA-80-1.6/2.7
	FED. NO. NO FED AID
CCO#: 101 SUPPLEMENT#: 2 Category Code: CHPT	CONTINGENCY BALANCE (incl. this change): $3,356,638.40
COST: $50,000.00 INCREASE ☑ DECREASE ☐	HEADQUARTERS APPROVAL REQUIRED? ☐ YES ☑ NO
SUPPLEMENTAL FUNDS PROVIDED: $0.00	IS THIS REQUEST IN ACCORDANCE WITH ENVIRONMENTAL DOCUMENTS? ☑ YES ☐ NO
CCO DESCRIPTION: Additional funds.	**PROJECT DESCRIPTION:** Construct bridge, roadway, building and electrical system.

Original Contract Time:	Time Adj. This Change:	Previously Approved CCO Time Adjustments:	Percentage Time Adjusted: (including this change)	Total # of Unreconciled Deferred Time CCO(s): (including this change)
810 Day(s)	0 Day(s)	184 Day(s)	23 %	14

THIS CHANGE ORDER PROVIDES FOR:
Additional funds for CCO No. 101 and 101 supplement 1. Work is as described below:

Replace the embedded electrical conduits with embedded sleeves and blockout openings and revise access openings in Frame 1 of Bridge No. 34-0006R. Relocate the East Bound (EB) sewer line in the Oakland Touch Down (OTD) Superstructure to align with the existing sewer line from the EB Skyway Superstructure. Details are per CCO 101.

Relocate drain line in Bridge No. 34-0006R from exterior bay between girder L and K to interior bay between girder K and J. Details are per CCO 101 supplement 1.

These CCOs were written to address issues with blockouts and access openings within the eastbound bridge. This change is necessary to pay for previously ordered CCO work and anticipated upcoming CCO work. The extent of extent of work was greater than originally anticipated. New work is not being added by this CCO.

Payment for this work will be at Extra Work at Force Account for an estimated cost of $50,000.00 which can be financed from the contingency fund.

Design and Maintenance concurrence is not necessary because this CCO is for additional funds only.

No adjustment of contract time is warranted since this change does not affect the controlling operation.

CONCURRED BY:		
Construction Engineer:	Ben Ghafghazi	Date 7/20/2010
Bridge Engineer:	for Mehran Ardakanian	Date 7-20-10
Project Engineer:		Date
Project Manager:		Date
FHWA Rep.:		Date
Environmental:		Date
Other (specify):		Date
Other (specify):		Date
District Prior Approval By:		Date
HQ (Issue Approve) By:		Date
Resident Engineer's Signature:		Date 7/20/2010

ESTIMATE OF COST

	THIS REQUEST	TOTAL TO DATE
ITEMS	$0.00	$0.00
FORCE ACCOUNT	$50,000.00	$150,000.00
AGREED PRICE	$0.00	$0.00
ADJUSTMENT	$0.00	$0.00
TOTAL	$50,000.00	$150,000.00

FEDERAL PARTICIPATION

☐ PARTICIPATING ☐ PARTICIPATING IN PART ☑ NONE
☐ NON-PARTICIPATING (MAINTENANCE) ☐ NON-PARTICIPATING

FEDERAL SEGREGATION (if more than one Funding Source or P.I.P. type)
☑ CCO FUNDED PER CONTRACT ☐ CCO FUNDED AS FOLLOWS

FEDERAL FUNDING SOURCE	PERCENT

ADA Notice: For individuals with sensory disabilities, this document is available in alternate formats. For information call: (916) 654-6410 or TDD (916) 654-3880 or write Records and Forms Management, 1120 N Street, MS-89, Sacramento, CA 95814.

STATE OF CALIFORNIA - DEPARTMENT OF TRANSPORTATION

CONTRACT CHANGE ORDER

Change Requested by: Engineer

CCO: 101	Suppl. No. 2	Contract No. 04 - 0120L4	Road ALA-80-1.6/2.7	FED. AID LOC.: NO FED AID

To: **M C M CONSTRUCTION INC**

You are directed to make the following changes from the plans and specifications or do the following described work not included in the plans and specifications for this contract. ***NOTE: This change order is not effective until approved by the Engineer.***

Description of work to be done, estimate of quantities and prices to be paid. (Segregate between additional work at contract price, agreed price and force account.) Unless otherwise stated, rates for rental of equipment cover only such time as equipment is actually used and no allowance will be made for idle time. This last percentage shown is the net accumulated increase or decrease from the original quantity in the Engineer's Estimate.

Provide additional funds for CCO No. 101 and 101 supplement 1. Work is as described below.

Extra Work at Force Account:

Replace the embedded electrical conduits with embedded sleeves and blockout openings and revise access openings in Frame 1 of Bridge No. 34-0006R. Relocate the East Bound (EB) sewer line in the Oakland Touch Down (OTD) Superstructure to align with the existing sewer line from the EB Skyway Superstructure. Details are per CCO 101.

Relocate drain line in Bridge No. 34-0006R from exterior bay between girder L and K to interior bay between girder K and J. Details are per CCO 101 supplement 1.

Estimated cost of Extra Work at Force Account $50,000.00

Estimated Cost: Increase ☑ **Decrease** ☐ **$50,000.00**

By reason of this order the time of completion will be adjusted as follows: 0 days

Submitted by

Signature	Resident Engineer BEN GHAFGHAZI	Date 7/20/2010

Approval Recommended by

Signature	Construction Engineer Ben Ghafghazi	Date 7/20/2010

Engineer Approval by

Signature	Construction Manager Amer Bata	Date 7/20/10

We the undersigned contractor, have given careful consideration to the change proposed and agree, if this proposal is approved, that we will provide all equipn furnish the materials, except as may otherwise be noted above, and perform all services necessary for the work above specified, and will accept as full paymer therefor the prices shown above.

NOTE: If you, the contractor, do not sign acceptance of this order, your attention is directed to the requirements of the specifications as to proceeding with the ordered work and filing a written protest within the time therein specified.

Contractor Acceptance by

Signature NOT Required	(Print name and title)	Date

STATE OF CALIFORNIA - DEPARTMENT OF TRANSPORTATION

CONTRACT CHANGE ORDER MEMORANDUM

DATE: 4/6/2010 Page 1 of 1

TO: AMER BATA / BEN GHAFGHAZI

FROM: BEN GHAFGHAZI

FILE: **E.A.** 04 - 0120L4
CO-RTE-PM ALA-80-1.6/2.7
FED. NO. NO FED AID

CCO#: **101** | SUPPLEMENT#: **3** | Category Code: **AFZZ**

CONTINGENCY BALANCE (incl. this change) **$2,146,116.40**

COST: **$0.00** INCREASE ☐ DECREASE ☐

HEADQUARTERS APPROVAL REQUIRED? ☐ YES ☑ NO

SUPPLEMENTAL FUNDS PROVIDED: **$0.00**

IS THIS REQUEST IN ACCORDANCE WITH ENVIRONMENTAL DOCUMENTS? ☑ YES ☐ NO

CCO DESCRIPTION:
Time Adjustment of 0 Days.

PROJECT DESCRIPTION:
Construct bridge, roadway, building and electrical system.

Original Contract Time:	Time Adj. This Change:	Previously Approved CCO Time Adjustments:	Percentage Time Adjusted: (including this change)	Total # of Unreconciled Deferred Time CCO(s): (including this change)
810 Day(s)	**0** Day(s)	**184** Day(s)	**23** %	**13**

THIS CHANGE ORDER PROVIDES FOR:
A time adjustment of 0 (zero) working days, in accordance with Section 8-1.07, "Liquidated Damages", of the Standard Specifications.

It has been determined that the work of Contract Change Orders No. 101 Supplements 0 and 2, has had no impact on the contractor's controlling operation. Therefore, a time extension of 0 days is recommended.

Total Time Adjustment = 0 Days

CONCURRED BY:

Construction Engineer:	Ben Ghafghazi	Date 4/7/2010
Bridge Engineer:		Date
Project Engineer:		Date
Project Manager:		Date
FHWA Rep.:		Date
Environmental:		Date
Other (specify):		Date
Other (specify):		Date
District Prior Approval By:		Date
HQ (Issue Approve) By:		Date
Resident Engineer's Signature:		Date 4/7/2010

ESTIMATE OF COST

	THIS REQUEST	TOTAL TO DATE
ITEMS	$0.00	$0.00
FORCE ACCOUNT	$0.00	$150,000.00
AGREED PRICE	$0.00	$0.00
ADJUSTMENT	$0.00	$0.00
TOTAL	$0.00	$150,000.00

FEDERAL PARTICIPATION

☐ PARTICIPATING ☐ PARTICIPATING IN PART ☑ NONE
☐ NON-PARTICIPATING (MAINTENANCE) ☐ NON-PARTICIPATING

FEDERAL SEGREGATION (if more than one Funding Source or P.I.P. type)
☑ CCO FUNDED PER CONTRACT ☐ CCO FUNDED AS FOLLOWS

FEDERAL FUNDING SOURCE	PERCENT

ADA Notice: For individuals with sensory disabilities, this document is available in alternate formats. For information call: (916) 654-6410 or TDD (916) 654-3880 or write Records and Forms Management, 1120 N Street, MS-89, Sacramento, CA 95814.

STATE OF CALIFORNIA - DEPARTMENT OF TRANSPORTATION

CONTRACT CHANGE ORDER

Change Requested by: Engineer

CCO: 101 **Suppl. No. 3** **Contract No. 04 - 0120L4** | **Road** ALA-80-1.6/2.7 **FED. AID LOC.:** NO FED AID

To: **M C M CONSTRUCTION INC**

You are directed to make the following changes from the plans and specifications or do the following described work not included in the plans and specifications for this contract. ***NOTE: This change order is not effective until approved by the Engineer.***

Description of work to be done, estimate of quantities and prices to be paid. (Segregate between additional work at contract price, agreed price and force account.) Unless otherwise stated, rates for rental of equipment cover only such time as equipment is actually used and no allowance will be made for idle time. This last percentage shown is the net accumulated increase or decrease from the original quantity in the Engineer's Estimate.

TIME ADJUSTMENT:

A determination of the delay in completion of the contract due to the work specified by Contract Change Orders No. 101 Supplements 0 and 2, has been made in accordance with the provisions of Section 8-1.07 of the Standard Specifications.

Time Adjustment = 0 Days

Acceptance of this change order constitutes an agreement of full resolution of all time impact costs resulting from Change Orders No. 101 Supplements 0 and 2.

This change order acts to resolve the deferred time issued on Change Orders No. 101 Supplements 0 and 2, and no additional time shall be granted.

Estimated Cost: **Increase** ☐ **Decrease** ☐ **$0.00**

By reason of this order the time of completion will be adjusted as follows: 0 days

Signature	**Resident Engineer** Ben Ghafghazi	**Date** 4/7/2010
Signature	**Construction Engineer** Ben Ghafghazi	**Date** 4/7/2010
Signature	**Construction Manager** Amer Bata	**Date** 7/14/10

We the undersigned contractor, have given careful consideration to the change proposed and agree, if this proposal is approved, that we will provide all equipment, furnish the materials, except as may otherwise be noted above, and perform all services necessary for the work above specified, and will accept as full payment therefor the prices shown above.

NOTE: If you, the contractor, do not sign acceptance of this order, your attention is directed to the requirements of the specifications as to proceeding with the ordered work and filing a written protest within the time therein specified.

Signature	**(Print name and title)** JAMES A. CARTER, PRESIDENT	**Date** 7/14/10

STATE OF CALIFORNIA - DEPARTMENT OF TRANSPORTATION

CONTRACT CHANGE ORDER MEMORANDUM

TO: AMER BATA / BEN GHAFGHAZI	FILE: E.A. 04 - 0120L4
FROM: BEN GHAFGHAZI	CO-RTE-PM ALA-80-1.6/2.7
	FED. NO. NO FED AID
CCO#: 101 SUPPLEMENT#: 4 Category Code: CHPT	CONTINGENCY BALANCE (incl. this change): $1,009,598.90
COST: $20,000.00 INCREASE ☑ DECREASE ☐	HEADQUARTERS APPROVAL REQUIRED? ☐ YES ☑ NO
SUPPLEMENTAL FUNDS PROVIDED: $0.00	IS THIS REQUEST IN ACCORDANCE WITH ENVIRONMENTAL DOCUMENTS? ☑ YES ☐ NO
CCO DESCRIPTION: Additional Funds for Modify Blockouts EB	**PROJECT DESCRIPTION:** Construct bridge, roadway, building and electrical system.

Original Contract Time:	Time Adj. This Change:	Previously Approved CCO Time Adjustments:	Percentage Time Adjusted: (including this change)	Total # of Unreconciled Deferred Time CCO(s): (including this change)
810 Day(s)	0 Day(s)	0 Day(s)	0 %	0

THIS CHANGE ORDER PROVIDES FOR:

Additional funding for replacing electrical conduit and relocating drainage within Frame 1 of the eastbound structure.

The original Change Order No. 101 along with Supplement No. 2 provided for the contractor to replace electrical conduit with embedded sleeves and to relocate drainage within the Frame 1 eastbound structure. Supplements No. 2 provided additional funds for this work and Supplement No. 3 closed out the change order deferred time with no time extension granted.

The cost of the placing the embedded sleeves exceeded the previous estimates and it is now anticipated that additional funding of $20,000.00 will be required to fund the work performed.

The work shall be compensated as extra work at force account at an estimated cost of $20,000.00 which shall be financed from the contract contingency funds. A cost analysis is on file.

No adjustment of contract time is warranted as the change will not affect the controlling operation.

Maintenance concurrence is not required as this change shall not affect any permanent roadway features.

CONCURRED BY:

Construction Engineer:	Ben Ghafghazi	Date 12/28/2010
Bridge Engineer:	Hazzaa El-Mahmoud	Date
Project Engineer:		Date
Project Manager:		Date
FHWA Rep.:		Date
Environmental:		Date
Other (specify):		Date
Other (specify):		Date
District Prior Approval By:		Date
HQ (Issue Approve) By:		Date
Resident Engineer's Signature:		Date 12/28/2010

ESTIMATE OF COST

	THIS REQUEST	TOTAL TO DATE
ITEMS	$0.00	$0.00
FORCE ACCOUNT	$20,000.00	$170,000.00
AGREED PRICE	$0.00	$0.00
ADJUSTMENT	$0.00	$0.00
TOTAL	$20,000.00	$170,000.00

FEDERAL PARTICIPATION

☐ PARTICIPATING ☐ PARTICIPATING IN PART ☑ NONE
☐ NON-PARTICIPATING (MAINTENANCE) ☐ NON-PARTICIPATING

FEDERAL SEGREGATION (if more than one Funding Source or P.I.P. type)
☐ CCO FUNDED PER CONTRACT ☐ CCO FUNDED AS FOLLOWS

FEDERAL FUNDING SOURCE	PERCENT

ADA Notice: For individuals with sensory disabilities, this document is available in alternate formats. For information call: (916) 654-6410 or TDD (916) 654-3880 or write Records and Forms Management, 1120 N Street, MS-89, Sacramento, CA 95814.

STATE OF CALIFORNIA - DEPARTMENT OF TRANSPORTATION

CONTRACT CHANGE ORDER

Change Requested by: Engineer

CCO: 101	Suppl. No. 4	Contract No. 04 - 0120L4	Road ALA-80-1.6/2.7	FED. AID LOC.: NO FED AID

To: **M C M CONSTRUCTION INC**

You are directed to make the following changes from the plans and specifications or do the following described work not included in the plans and specifications for this contract. ***NOTE: This change order is not effective until approved by the Engineer.***

Description of work to be done, estimate of quantities and prices to be paid. (Segregate between additional work at contract price, agreed price and force account.) Unless otherwise stated, rates for rental of equipment cover only such time as equipment is actually used and no allowance will be made for idle time. This last percentage shown is the net accumulated increase or decrease from the original quantity in the Engineer's Estimate.

Extra Work at Force Account:

Provide additional funds for the work specified under the original Change Order No. 101 and Change Order No. 101, Supplement No. 1.

Estimated cost of Extra Work at Force Account $20,000.00

Estimated Cost: Increase ☑ Decrease ☐ **$20,000.00**

By reason of this order the time of completion will be adjusted as follows: 0 days

Submitted by

Signature	Resident Engineer BEN GHAFGHAZI	Date 12/28/2010

Approval Recommended by

Signature	Construction Engineer Ben Ghafghazi	Date 12/28/2010

Engineer Approval by

Signature	Construction Manager For Amer Baja	Date 12/29/2010

We the undersigned contractor, have given careful consideration to the change proposed and agree, if this proposal is approved, that we will provide all equipn furnish the materials, except as may otherwise be noted above, and perform all services necessary for the work above specified, and will accept as full paymer therefor the prices shown above.

NOTE: If you, the contractor, do not sign acceptance of this order, your attention is directed to the requirements of the specifications as to proceeding with the ordered work and filing a written protest within the time therein specified.

Contractor Acceptance by

Signature NOT Required	(Print name and title)	Date

STATE OF CALIFORNIA - DEPARTMENT OF TRANSPORTATION

CONTRACT CHANGE ORDER

Change Requested by: Engineer

CCO 102	Suppl. No. 0	Contract No. 04 - 0120L4	Road ALA-80-1.6/2.7	FED. AID LOC.: NO FED AID

To: **M C M CONSTRUCTION INC**

You are directed to make the following changes from the plans and specifications or do the following described work not included in the plans and specifications for this contract. ***NOTE: This change order is not effective until approved by the Engineer.***

Description of work to be done, estimate of quantities and prices to be paid. (Segregate between additional work at contract price, agreed price and force account.) Unless otherwise stated, rates for rental of equipment cover only such time as equipment is actually used and no allowance will be made for idle time. This last percentage shown is the net accumulated increase or decrease from the original quantity in the Engineer's Estimate.

Provide labor, equipment, and materials to modify precast walls as described below. All work shall be in accordance with Section 10-1.55, "Precast Wall," of the Special Provisions.

Extra Work at Force Account:

South Elevation precast wall footing elevation shall be raised as determined necessary by the Engineer to obtain correct top of wall elevation.

Estimated cost of Extra Work at Force Account $20,000.00

Extra Work at Lump Sum:

Modify height of precast wall panels on North Elevation between Sta. W 86+84 and 87+51. Wall panels will be trimmed as determined necessary by the Engineer to obtain correct top of wall elevation. For this work, the contractor will be paid the sum of $18,661.50. This sum constitutes full compensation, including markups, for this change.

Extra Work at Agreed Lump Sum $18,661.50

Estimated Cost: **Increase** ☑ **Decrease** ☐ **$38,661.50**

By reason of this order the time of completion will be adjusted as follows: 0 days

Submitted by

Signature	Resident Engineer BEN GHAFGHAZI	Date 4/13/09

Approval Recommended by

Signature	Construction Engineer Ben Ghafghazi	Date 4/13/09

Engineer Approval by

Signature	Construction Engineer Ben Ghafghazi	Date 4/29/09

We the undersigned contractor, have given careful consideration to the change proposed and agree, if this proposal is approved, that we will provide all equipment, furnish the materials, except as may otherwise be noted above, and perform all services necessary for the work above specified, and will accept as full payment therefor the prices shown above.

NOTE: If you, the contractor, do not sign acceptance of this order, your attention is directed to the requirements of the specifications as to proceeding with the ordered work and filing a written protest within the time therein specified.

Contractor Acceptance by

Signature	(Print name and title) EDMUNDO A. PUCHI, TREASURER	Date 4/28/09

STATE OF CALIFORNIA - DEPARTMENT OF TRANSPORTATION

CONTRACT CHANGE ORDER MEMORANDUM

DATE: 3/24/2009 Page 1 of 1

TO: AMER BATA / BEN GHAFGHAZI	FILE: E.A. 04 - 0120L4
FROM: BEN GHAFGHAZI	CO-RTE-PM ALA-80-1.6/2.7
	FED. NO. NO FED AID
CCO#: 102 SUPPLEMENT#: 0 Category Code: CMPD	CONTINGENCY BALANCE (incl. this change) $8,512,478.20
COST: $38,661.50 INCREASE ☑ DECREASE ☐	HEADQUARTERS APPROVAL REQUIRED? ☐ YES ☑ NO
SUPPLEMENTAL FUNDS PROVIDED: $0.00	IS THIS REQUEST IN ACCORDANCE WITH ENVIRONMENTAL DOCUMENTS? ☑ YES ☐ NO
CCO DESCRIPTION: Modify Precast Walls	**PROJECT DESCRIPTION:** Construct bridge, roadway, building and electrical system.

Original Contract Time:	Time Adj. This Change:	Previously Approved CCO Time Adjustments:	Percentage Time Adjusted: (including this change)	Total # of Unreconciled Deferred Time CCO(s): (including this change)
810 Day(s)	0 Day(s)	184 Day(s)	23 %	9

THIS CHANGE ORDER PROVIDES FOR:

Making modifications to precast walls to obtain the correct top of wall elevations. This consists of raising the South Elevation footing grades and trimming the North Elevation wall panels between Sta. W 86+84 and 87+51. All work will be in accordance with Section 10-1.55, "Precast Wall," of the Special Provisions.

This change is necessary to provide top of wall elevations to match the profile grade. The South Elevation footing was placed low due to incorrect grades provided by Caltrans. A later field check showed that the elevation of the benchmark used for staking was incorrect. The North Elevation is being modified because the wall plans do not take into account the sag vertical curve of the profile resulting in wall panels between Sta. W 86+84 and 87+51 being too tall. This was not discovered until the walls were cast.

This work will be paid as Extra Work at Force Account for $20,000.00 for raising the footing, and Extra Work at Agreed Lump Sum of $18,661.50 for trimming the wall panels. Total cost of this change is $38,661.50, which can be financed from the contingency fund.

Design and Maintenance concurrence is not necessary because this change addresses a field issue and does not change the design of the wall or roadway.

No adjustment of contract time is warranted since this change does not affect the controlling operation.

CONCURRED BY:		
Construction Engineer:	Ben Ghafghazi	Date 4/13/09
Bridge Engineer:	Mehran Ardakanian	Date 04.13.09
Project Engineer:		Date
Project Manager:		Date
FHWA Rep.:		Date
Environmental:		Date
Other (specify):		Date
Other (specify):		Date
District Prior Approval By:		Date
HQ (Issue Approve) By:		Date
Resident Engineer's Signature:		Date 4/13/09

ESTIMATE OF COST

	THIS REQUEST	TOTAL TO DATE
ITEMS	$0.00	$0.00
FORCE ACCOUNT	$20,000.00	$20,000.00
AGREED PRICE	$18,661.50	$18,661.50
ADJUSTMENT	$0.00	$0.00
TOTAL	$38,661.50	$38,661.50

FEDERAL PARTICIPATION

☐ PARTICIPATING ☐ PARTICIPATING IN PART ☑ NONE
☐ NON-PARTICIPATING (MAINTENANCE) ☐ NON-PARTICIPATING

FEDERAL SEGREGATION (if more than one Funding Source or P.I.P. type)
☑ CCO FUNDED PER CONTRACT ☐ CCO FUNDED AS FOLLOWS

FEDERAL FUNDING SOURCE	PERCENT

ADA Notice: For individuals with sensory disabilities, this document is available in alternate formats. For information call: (916) 654-6410 or TDD (916) 654-3880 or write Records and Forms Management, 1120 N Street, MS-89, Sacramento, CA 95814.

STATE OF CALIFORNIA - DEPARTMENT OF TRANSPORTATION

CONTRACT CHANGE ORDER

Change Requested by: Engineer

CCO 103	Suppl. No. 0	Contract No. 04 - 0120L4	Road ALA-80-1.6/2.7	FED. AID LOC.: NO FED AID

M C M CONSTRUCTION INC

You are directed to make the following changes from the plans and specifications or do the following described work not included in the plans and specifications for this contract. ***NOTE: This change order is not effective until approved by the Engineer.***

Description of work to be done, estimate of quantities and prices to be paid. (Segregate between additional work at contract price, agreed price and force account.) Unless otherwise stated, rates for rental of equipment cover only such time as equipment is actually used and no allowance will be made for idle time. This last percentage shown is the net accumulated increase or decrease from the original quantity in the Engineer's Estimate.

Extra Work at Force Account:

At Bent E19AR monitor driving of piles using Pile Driving Analyzer (PDA) equipment and re-drive piles to achieve an acceptable blow count. All work shall be in accordance with Section 10-1.50, "Piling," of the Special Provisions and as determined by the Engineer.

Estimated cost of Extra Work at Force Account $20,000.00

Estimated Cost: Increase ☑ **Decrease** ☐ **$20,000.00**

By reason of this order the time of completion will be adjusted as follows: 0 days

Submitted by		
Signature	Resident Engineer BEN GHAFGHAZI	Date 4/1/09
Approval Recommended by		
Signature	Construction Engineer Ben Ghafghazi	Date 4/1/09
Engineer Approval by		
Signature	Construction Engineer Ben Ghafghazi	Date 4/22/09

We the undersigned contractor, have given careful consideration to the change proposed and agree, if this proposal is approved, that we will provide all equipment, furnish the materials, except as may otherwise be noted above, and perform all services necessary for the work above specified, and will accept as full payment therefor the prices shown above.

NOTE: If you, the contractor, do not sign acceptance of this order, your attention is directed to the requirements of the specifications as to proceeding with the ordered work and filing a written protest within the time therein specified.

Contractor Acceptance by		
Signature	(Print name and title) EDMUNDO A. PUCHI, TREASURER	Date 4/15/09

STATE OF CALIFORNIA - DEPARTMENT OF TRANSPORTATION

CONTRACT CHANGE ORDER MEMORANDUM

DATE: 3/26/2009 Page 1 of 1

TO: AMER BATA / BEN GHAFGHAZI

FROM: BEN GHAFGHAZI

FILE: E.A. 04 - 0120L4
CO-RTE-PM ALA-80-1.6/2.7
FED. NO. NO FED AID

CCO#: 103 | SUPPLEMENT#: 0 | Category Code: CHSA

CONTINGENCY BALANCE (incl. this change) $8,512,478.20

COST: $20,000.00 INCREASE ☑ DECREASE ☐

HEADQUARTERS APPROVAL REQUIRED? ☐ YES ☑ NO

SUPPLEMENTAL FUNDS PROVIDED: $20,000.00

IS THIS REQUEST IN ACCORDANCE WITH ENVIRONMENTAL DOCUMENTS? ☑ YES ☐ NO

CCO DESCRIPTION:
Monitor pile driving at Bent E19AR.

PROJECT DESCRIPTION:
Construct bridge, roadway, building and electrical system.

Original Contract Time:	Time Adj. This Change:	Previously Approved CCO Time Adjustments:	Percentage Time Adjusted: (including this change)	Total # of Unreconciled Deferred Time CCO(s): (including this change)
810 Day(s)	0 Day(s)	184 Day(s)	23 %	8

THIS CHANGE ORDER PROVIDES FOR:

Monitoring driving of piles at Bent E19AR using Pile Driving Analyzer (PDA) equipment and re-driving piles to achieve an acceptable blow count. All work shall be in accordance with Section 10-1.50, "Piling," of the Special Provisions and as determined by the Engineer.

This change is necessary because the blow count and soil resistance were low for these piles. To determine if acceptable long term resistance can be achieved the Contractor will be directed to re-drive the piles and record the data using PDA equipment. In order to expedite the work, and avoid delaying falsework installation, the PDA equipment and monitoring will be provided by the Contractor.

This work will be paid as Extra Work at Force Account for $20,000.00, which can be financed from supplemental funds of $800,000.00 which was allotted for this work

This change has been discussed and concurred with Robert Price of Caltrans Geotechnical; Mike Kapuskar, geotechnical engineer for EMI; and Mohan Char, structures designer for LAN Engineering. Maintenance concurrence is not necessary because this work is temporary.

No adjustment of contract time is warranted since this change does not affect the controlling operation.

CONCURRED BY:

Construction Engineer:	Ben Ghafghazi	Date 4/1/09
Bridge Engineer:	Mehran Ardakanian	Date 03/30/09
Project Engineer:		Date
Project Manager:		Date
FHWA Rep.:		Date
Environmental:		Date
Other (specify):	Robert Price, Geotechnical	Date 3/13/09
Other (specify):	Mohan Char, LAN Engineering	Date 3/13/09
District Prior Approval By:		Date
HQ (Issue Approve) By:		Date
Resident Engineer's Signature		Date 4/1/09

ESTIMATE OF COST

	THIS REQUEST	TOTAL TO DATE
ITEMS	$0.00	$0.00
FORCE ACCOUNT	$20,000.00	$20,000.00
AGREED PRICE	$0.00	$0.00
ADJUSTMENT	$0.00	$0.00
TOTAL	$20,000.00	$20,000.00

FEDERAL PARTICIPATION

☐ PARTICIPATING ☐ PARTICIPATING IN PART ☑ NONE
☐ NON-PARTICIPATING (MAINTENANCE) ☐ NON-PARTICIPATING

FEDERAL SEGREGATION (if more than one Funding Source or P.I.P. type)
☐ CCO FUNDED PER CONTRACT ☐ CCO FUNDED AS FOLLOWS

FEDERAL FUNDING SOURCE PERCENT

ADA Notice: For individuals with sensory disabilities, this document is available in alternate formats. For information call: (916) 654-6410 or TDD (916) 654-3880 or write Records and Forms Management, 1120 N Street, MS-89, Sacramento, CA 95814.

STATE OF CALIFORNIA - DEPARTMENT OF TRANSPORTATION

CONTRACT CHANGE ORDER MEMORANDUM

DATE: 8/27/2010

TO: AMER BATA / BEN GHAFGHAZI	FILE: E.A. 04 - 0120L4
FROM: BEN GHAFGHAZI	CO-RTE-PM ALA-80-1.6/2.7
	FED. NO. NO FED AID
CCO#: 103 SUPPLEMENT#: 1 Category Code: CHSA	CONTINGENCY BALANCE (incl. this change): $889,799.90
COST: $20,000.00 INCREASE ☑ DECREASE ☐	HEADQUARTERS APPROVAL REQUIRED? ☐ YES ☑ NO
SUPPLEMENTAL FUNDS PROVIDED: $0.00	IS THIS REQUEST IN ACCORDANCE WITH ENVIRONMENTAL DOCUMENTS? ☑ YES ☐ NO
CCO DESCRIPTION:	**PROJECT DESCRIPTION:** Construct bridge, roadway, building and electrical system.

Original Contract Time:	Time Adj. This Change:	Previously Approved CCO Time Adjustments:	Percentage Time Adjusted: (Including this change)	Total # of Unreconciled Deferred Time CCO(s): (including this change)
810 Day(s)	0 Day(s)	0 Day(s)	0 %	0

THIS CHANGE ORDER PROVIDES FOR:

Providing additional funds for monitoring driving of piles at Bent E19AR using Pile Driving Analyzer (PDA) equipment and re-driving piles to achieve an acceptable blow count. All work shall be in accordance with Section 10-1.50, "Piling," of the Special Provisions and as determined by the Engineer.

This change is necessary because the blow count and soil resistance were low for these piles. To determine if acceptable long term resistance can be achieved the Contractor will be directed to re-drive the piles and record the data using PDA equipment. In order to expedite the work, and avoid delaying falsework installation, the PDA equipment and monitoring will be provided by the Contractor.

This work will be paid as Extra Work at Force Account for $20,000.00, which can be financed from the contingency funds.

Maintenance concurrence is not necessary because this work is temporary.

No adjustment of contract time is warranted since this change does not affect the controlling operation.

CONCURRED BY:		
Construction Engineer:	Ben Ghafghazi	Date 9/1/2010
Bridge Engineer:		Date
Project Engineer:		Date
Project Manager:		Date
FHWA Rep.:		Date
Environmental:		Date
Other (specify):		Date
Other (specify):		Date
District Prior Approval By:		Date
HQ (Issue Approve) By:		Date
Resident Engineer's Signature:		Date 9/1/2010

ESTIMATE OF COST

	THIS REQUEST	TOTAL TO DATE
ITEMS	$0.00	$0.00
FORCE ACCOUNT	$20,000.00	$40,000.00
AGREED PRICE	$0.00	$0.00
ADJUSTMENT	$0.00	$0.00
TOTAL	$20,000.00	$40,000.00

FEDERAL PARTICIPATION

☐ PARTICIPATING ☐ PARTICIPATING IN PART ☑ NONE
☐ NON-PARTICIPATING (MAINTENANCE) ☐ NON-PARTICIPATING

FEDERAL SEGREGATION (if more than one Funding Source or P.I.P. type)
☑ CCO FUNDED PER CONTRACT ☐ CCO FUNDED AS FOLLOWS

FEDERAL FUNDING SOURCE	PERCENT

ADA Notice: For individuals with sensory disabilities, this document is available in alternate formats. For information call: (916) 654-6410 or TDD (916) 654-3880 or write Records and Forms Management, 1120 N Street, MS-89, Sacramento, CA 95814.

STATE OF CALIFORNIA - DEPARTMENT OF TRANSPORTATION

CONTRACT CHANGE ORDER

Change Requested by: Engineer

CCO: 103	Suppl. No. 1	Contract No. 04 - 0120L4	Road ALA-80-1.6/2.7	FED. AID LOC.: NO FED AID

To: **M C M CONSTRUCTION INC**

You are directed to make the following changes from the plans and specifications or do the following described work not included in the plans and specifications for this contract. ***NOTE: This change order is not effective until approved by the Engineer.***

Description of work to be done, estimate of quantities and prices to be paid. (Segregate between additional work at contract price, agreed price and force account.) Unless otherwise stated, rates for rental of equipment cover only such time as equipment is actually used and no allowance will be made for idle time. This last percentage shown is the net accumulated increase or decrease from the original quantity in the Engineer's Estimate.

Provide Additional Funds

Extra Work at Force Account:

Provide additional funds to monitor driving of piles using Pile Driving Analyzer (PDA) equipment and re-drive piles to achieve an acceptable blow count at Bent E19AR. All work shall be in accordance with Section 10-1.50, "Piling," of the Special Provisions and as determined by the Engineer.

Estimated cost of Extra Work at Force Account $20,000.00

Estimated Cost: Increase ☑ Decrease ☐ **$20,000.00**

By reason of this order the time of completion will be adjusted as follows: 0 days

Submitted by

Signature	Resident Engineer BEN GHAFGHAZI	Date 9/1/2010

Approval Recommended by

Signature	Construction Engineer Ben Ghafghazi	Date 9/1/2010

Engineer Approval by

Signature	Construction Engineer Amer Bata	Date 9/3/10

We the undersigned contractor, have given careful consideration to the change proposed and agree, if this proposal is approved, that we will provide all equipn furnish the materials, except as may otherwise be noted above, and perform all services necessary for the work above specified, and will accept as full paymer therefor the prices shown above.

NOTE: If you, the contractor, do not sign acceptance of this order, your attention is directed to the requirements of the specifications as to proceeding with the ordered work and filing a written protest within the time therein specified.

Contractor Acceptance by

Signature NOT Required	(Print name and title)	Date

STATE OF CALIFORNIA - DEPARTMENT OF TRANSPORTATION

CONTRACT CHANGE ORDER

Change Requested by: Engineer

CCO 104	Suppl. No. 0	Contract No. 04 - 0120L4	Road ALA-80-1.6/2.7	FED. AID LOC.: NO FED AID

M C M CONSTRUCTION INC

You are directed to make the following changes from the plans and specifications or do the following described work not included in the plans and specifications for this contract. ***NOTE: This change order is not effective until approved by the Engineer.***

Description of work to be done, estimate of quantities and prices to be paid. (Segregate between additional work at contract price, agreed price and force account.) Unless otherwise stated, rates for rental of equipment cover only such time as equipment is actually used and no allowance will be made for idle time. This last percentage shown is the net accumulated increase or decrease from the original quantity in the Engineer's Estimate.

Extra Work at Force Account:

Install temporary railing (Type K) in lieu of permanent concrete barrier east of Bent 17 on Frame 1 of Bridge No. 34-0006L. Exact layout will be determined in the field. After installation of pipe beams the k-rail shall be removed.

Estimated cost of Extra Work at Force Account $20,000.00

Consideration of a time adjustment will be deferred until completion of the work specified herein. Determination of a commensurate time extension will be made in accordance with Section 10-1.14, "Progress Schedule (Critical Path Method)," of the Special Provisions and Section 8-1.07, "Liquidated Damages," of the Standard Specifications.

Estimated Cost: Increase ☑ **Decrease** ☐ **$20,000.00**

By reason of this order the time of completion will be adjusted as follows: Deferred

Submitted by		
Signature	**Resident Engineer** BEN GHAFGHAZI	**Date** 5/15/09
Approval Recommended by		
Signature	**Construction Engineer** Ben Ghafghazi	**Date** 5/15/09
Engineer Approval by		
Signature	**Construction Manager** Amer Bata	**Date** 6/5/09

We the undersigned contractor, have given careful consideration to the change proposed and agree, if this proposal is approved, that we will provide all equipment, furnish the materials, except as may otherwise be noted above, and perform all services necessary for the work above specified, and will accept as full payment therefor the prices shown above.

NOTE: If you, the contractor, do not sign acceptance of this order, your attention is directed to the requirements of the specifications as to proceeding with the ordered work and filing a written protest within the time therein specified.

Contractor Acceptance by		
Signature	**(Print name and title)** EDMUNDO A. PUCHI, TREASURER	**Date** 5/28/09

STATE OF CALIFORNIA - DEPARTMENT OF TRANSPORTATION

CONTRACT CHANGE ORDER MEMORANDUM

DATE: 3/30/2009 Page 1 of 1

TO: AMER BATA / BEN GHAFGHAZI	FILE: E.A. 04 - 0120L4
FROM: BEN GHAFGHAZI	CO-RTE-PM ALA-80-1.6/2.7
	FED. NO. NO FED AID
CCO#: 104 SUPPLEMENT#: 0 Category Code: CHPT	CONTINGENCY BALANCE (incl. this change) $8,492,478.20
COST: $20,000.00 INCREASE ☑ DECREASE ☐	HEADQUARTERS APPROVAL REQUIRED? ☐ YES ☑ NO
SUPPLEMENTAL FUNDS PROVIDED: $0.00	IS THIS REQUEST IN ACCORDANCE WITH ENVIRONMENTAL DOCUMENTS? ☑ YES ☐ NO
CCO DESCRIPTION: Place k-rail in lieu of concrete barrier	**PROJECT DESCRIPTION:** Construct bridge, roadway, building and electrical system.

Original Contract Time:	Time Adj. This Change:	Previously Approved CCO Time Adjustments:	Percentage Time Adjusted: (including this change)	Total # of Unreconciled Deferred Time CCO(s): (including this change)
810 Day(s)	DEF Day(s)	184 Day(s)	23 %	9

THIS CHANGE ORDER PROVIDES FOR:

Installing temporary railing (Type K) in lieu of permanent concrete barrier east of Bent 17 on Frame 1 of Bridge No. 34-0006L.

This change is necessary to provide proper load during jacking operations for installing the hinge pipe beam between Oakland Touch Down and Skyway structures. Design calculated structure camber for the cantilever section between Bent 17 and Hinge E assuming that the permanent concrete barrier would be in place prior to the jacking operation. It is common practice for the construction of concrete barriers to be the last order of work in order to obtain a smooth profile along the top of barrier for the entire structure. To address these concerns k-rail will be placed during pipe beam installation, after which the k-rail will be removed and the permanent barrier installed.

This work will be paid as Extra Work at Force Account for $20,000.00, which can be financed from the contingency fund.

This change has been discussed and concurred with Hasan El-Natur of Structures Design and Jal Birdy of Moffat Nichol.

Adjustment of contract time is deferred pending completion of the work specified in this change as it may affect the controlling operation. Determination of a commensurate time extension will be made in accordance with Section 10-1.14, "Progress Schedule (Critical Path Method)," of the Special Provisions and Section 8-1.07, "Liquidated Damages," of the Standard Specifications.

CONCURRED BY:

Construction Engineer:	Ben Ghafghazi	Date 5/15/09
Bridge Engineer:	Mehran Ardakanian	Date 05/15/09
Project Engineer:	Hasan El-Natur, Structures Design	Date
Project Manager:		Date
FHWA Rep.:		Date
Environmental:		Date
Other (specify):	Jal Birdy, Moffat Nichol	Date 3/19/09
Other (specify):		Date
District Prior Approval By:		Date
HQ (Issue Approve) By:		Date
Resident Engineer's Signature:		Date 5/15/09

ESTIMATE OF COST

	THIS REQUEST	TOTAL TO DATE
ITEMS	$0.00	$0.00
FORCE ACCOUNT	$20,000.00	$20,000.00
AGREED PRICE	$0.00	$0.00
ADJUSTMENT	$0.00	$0.00
TOTAL	$20,000.00	$20,000.00

FEDERAL PARTICIPATION

☐ PARTICIPATING ☐ PARTICIPATING IN PART ☑ NONE
☐ NON-PARTICIPATING (MAINTENANCE) ☐ NON-PARTICIPATING

FEDERAL SEGREGATION (if more than one Funding Source or P.I.P. type)
☑ CCO FUNDED PER CONTRACT ☐ CCO FUNDED AS FOLLOWS

FEDERAL FUNDING SOURCE PERCENT

ADA Notice: For individuals with sensory disabilities, this document is available in alternate formats. For information call: (916) 654-6410 or TDD (916) 654-3880 or write Records and Forms Management, 1120 N Street, MS-89, Sacramento, CA 95814.

STATE OF CALIFORNIA - DEPARTMENT OF TRANSPORTATION

CONTRACT CHANGE ORDER MEMORANDUM

DATE: 4/6/2010

TO: AMER BATA / BEN GHAFGHAZI

FROM: BEN GHAFGHAZI

FILE: **E.A.** 04 - 0120L4
CO-RTE-PM ALA-80-1.6/2.7
FED. NO. NO FED AID

CCO#: **104** | SUPPLEMENT#: **1** | Category Code: **AFZZ**

CONTINGENCY BALANCE (incl. this change) **$2,146,116.40**

COST: **$0.00** INCREASE ☐ DECREASE ☐

HEADQUARTERS APPROVAL REQUIRED? ☐ YES ☑ NO

SUPPLEMENTAL FUNDS PROVIDED: **$0.00**

IS THIS REQUEST IN ACCORDANCE WITH ENVIRONMENTAL DOCUMENTS? ☑ YES ☐ NO

CCO DESCRIPTION:
Time Adjustment of 0 Days

PROJECT DESCRIPTION:
Construct bridge, roadway, building and electrical system.

Original Contract Time:	Time Adj. This Change:	Previously Approved CCO Time Adjustments:	Percentage Time Adjusted: (including this change)	Total # of Unreconciled Deferred Time CCO(s): (including this change)
810 Day(s)	**0** Day(s)	**184** Day(s)	**23** %	**10**

THIS CHANGE ORDER PROVIDES FOR:
A time adjustment of 0 (zero) working days, in accordance with Section 8-1.07, "Liquidated Damages", of the Standard Specifications.

It has been determined that the work of Contract Change Order No. 104 has had no impact on the contractor's controlling operation. Therefore, a time extension of 0 days is recommended.

Total Time Adjustment = 0 Days

CONCURRED BY:

Construction Engineer:	Ben Ghafghazi	Date 4/7/2010
Bridge Engineer:		Date
Project Engineer:		Date
Project Manager:		Date
FHWA Rep.:		Date
Environmental:		Date
Other (specify):		Date
Other (specify):		Date
District Prior Approval By:		Date
HQ (Issue Approve) By:		Date
Resident Engineer's Signature:		Date 4/7/2010

ESTIMATE OF COST

	THIS REQUEST	TOTAL TO DATE
ITEMS	$0.00	$0.00
FORCE ACCOUNT	$0.00	$20,000.00
AGREED PRICE	$0.00	$0.00
ADJUSTMENT	$0.00	$0.00
TOTAL	$0.00	$20,000.00

FEDERAL PARTICIPATION

☐ PARTICIPATING ☐ PARTICIPATING IN PART ☑ NONE
☐ NON-PARTICIPATING (MAINTENANCE) ☐ NON-PARTICIPATING

FEDERAL SEGREGATION (if more than one Funding Source or P.I.P. type)
☑ CCO FUNDED PER CONTRACT ☐ CCO FUNDED AS FOLLOWS

FEDERAL FUNDING SOURCE	PERCENT

ADA Notice: For individuals with sensory disabilities, this document is available in alternate formats. For information call: (916) 654-6410 or TDD (916) 654-3880 or write Records and Forms Management, 1120 N Street, MS-89, Sacramento, CA 95814.

STATE OF CALIFORNIA - DEPARTMENT OF TRANSPORTATION

CONTRACT CHANGE ORDER

Change Requested by: Engineer

CCO: 104	Suppl. No. 1	Contract No. 04 - 0120L4	Road ALA-80-1.6/2.7	FED. AID LOC.: NO FED AID

To: **M C M CONSTRUCTION INC**

You are directed to make the following changes from the plans and specifications or do the following described work not included in the plans and specifications for this contract. ***NOTE: This change order is not effective until approved by the Engineer.***

Description of work to be done, estimate of quantities and prices to be paid. (Segregate between additional work at contract price, agreed price and force account.) Unless otherwise stated, rates for rental of equipment cover only such time as equipment is actually used and no allowance will be made for idle time. This last percentage shown is the net accumulated increase or decrease from the original quantity in the Engineer's Estimate.

TIME ADJUSTMENT:

A determination of the delay in completion of the contract due to the work specified by Contract Change Order No. 104 has been made in accordance with the provisions of Section 8-1.07 of the Standard Specifications.

Time Adjustment = 0 Days

Acceptance of this change order constitutes an agreement of full resolution of all time impact costs resulting from Change Order No. 104.

This change order acts to resolve the deferred time issued on Change Order No. 104, and no additional time shall be granted.

Estimated Cost: **Increase** ☐ **Decrease** ☐ **$0.00**

By reason of this order the time of completion will be adjusted as follows: 0 days

Signature	**Resident Engineer** Ben Ghafghazi	**Date** 4/7/2010
Signature	**Construction Engineer** Ben Ghafghazi	**Date** 4/7/2010
Signature	**Construction Manager** Amer Bata	**Date** 7/14/10

We the undersigned contractor, have given careful consideration to the change proposed and agree, if this proposal is approved, that we will provide all equipment, furnish the materials, except as may otherwise be noted above, and perform all services necessary for the work above specified, and will accept as full payment therefor the prices shown above.

NOTE: If you, the contractor, do not sign acceptance of this order, your attention is directed to the requirements of the specifications as to proceeding with the ordered work and filing a written protest within the time therein specified.

Signature	**(Print name and title)** JAMES A. CARTER, PRESIDENT	**Date** 7/14/10

CONTRACT CHANGE ORDER

Change Requested by: Engineer

CCO 105	Suppl. No. 0	Contract No. 04 - 0120L4	Road ALA-80-1.6/2.7	FED. AID LOC.: NO FED AID

M C M CONSTRUCTION INC

You are directed to make the following changes from the plans and specifications or do the following described work not included in the plans and specifications for this contract. ***NOTE: This change order is not effective until approved by the Engineer.***

Description of work to be done, estimate of quantities and prices to be paid. (Segregate between additional work at contract price, agreed price and force account.) Unless otherwise stated, rates for rental of equipment cover only such time as equipment is actually used and no allowance will be made for idle time. This last percentage shown is the net accumulated increase or decrease from the original quantity in the Engineer's Estimate.

Provide temporary power and communications to existing Mole Substation, CMS 65, and existing sign structures at EBDTR Sta. 89+00 and 91+90.

Extra Work at Force Account:

Provide and install 15 KV cable, riser, splice UG and OH, and perform a short circuit study for the 15KV cable between the Oakland Substation and the existing Mole Substation with a high potential (Hipot) test per specifications on sheets 2 of 12 and 3 of 12 of this CCO and Note 2 on sheet 4 of 12 of this CCO.

Estimated cost of Extra Work at Force Account $60,000.00

Extra Work at Lump Sum:

Provide labor, equipment, and materials as necessary to provide temporary power and communications to existing Mole Substation, CMS 65, and existing sign structures at EBDRT Sta. 89+00 and 91+90 per sheets 5 of 12 through 12 of 12 of this CCO. All work will be in accordance with Section 86, "Signals, Lighting and Electrical Systems," of the Standard Specifications.

Extra Work at Agreed Lump Sum $138,341.34

Consideration of a time adjustment will be deferred until completion of the work specified herein. Determination of a commensurate time extension will be made in accordance with Section 10-1.14, "Progress Schedule (Critical Path Method)," of the Special Provisions and Section 8-1.07, "Liquidated Damages," of the Standard Specifications.

Estimated Cost: Increase ☑ **Decrease** ☐ **$198,341.34**

By reason of this order the time of completion will be adjusted as follows: Deferred

Submitted by

Signature	~~Resident Engineer~~ BEN GHAFGHAZI	Date 6/4/09

Approval Recommended by

Signature	Construction Manager Amer Bata	Date 6/5/09

Engineer Approval by

Signature	Construction Manager Amer Bata	Date 6/16/09

We the undersigned contractor, have given careful consideration to the change proposed and agree, if this proposal is approved, that we will provide all equipment, furnish the materials, except as may otherwise be noted above, and perform all services necessary for the work above specified, and will accept as full payment therefor the prices shown above.

NOTE: If you, the contractor, do not sign acceptance of this order, your attention is directed to the requirements of the specifications as to proceeding with the ordered work and filing a written protest within the time therein specified.

Contractor Acceptance by

Signature	(Print name and title) EDMUNDO A. PUCHI, TREASURER	Date 6/10/09

15 kV CABLE

The 15 kV shielded single conductor power cable shall be 15 kV, 133 percent insulation rated power cable designed to operate at conductor temperatures of 105°C normal, 130°C emergency, and 250°C short circuit conditions as defined by ICEA S-93-639 (NEMA WC-78) and (UL) Standard 1072. The cable shall be suitable for installations above or below grade, indoors or outdoors, and in wet or dry locations. The qualifying cable shall be (UL) labeled as MV-105, Sunlight Resistant and for cable tray use in accordance with UL Standard 1072.

Conductors

The conductors shall be compressed, Class B stranded copper and shall be in accordance with the requirements of ICEA S-93-639. The copper conductors shall consist of all bare strands or tin-coated strands in the outer layer in conformance with the requirements in ASTM Designations: B 3, B 8 and B 33. Conductors shall be unbroken for the full length of the reels specified in the Purchase Order. Reels containing splices will be rejected.

Conductor Shield

The conductor shielding shall consist of an extruded, black-colored, nonmetallic semiconducting EPR thermosetting compound material in conformance with the provisions in Section 2.7 of ICEA S-93-639. The minimum average thickness shall be 0.5 mm.

Insulation

The insulation shall be a discharge resistant, ethylene propylene (EP) based compound and be listed by Underwriters Laboratories. The minimum average thickness of the insulation shall be 5.59 mm. The manufacturer shall perform the Insulation Corona Discharge Resistance Test (3.9.3.3 of ICEA S-93-639) tested in conformance with the requirements in ASTM Designation: D 2275-89, "Standard Test Method for Voltage Endurance of Solid Electrical insulating materials Subjected to Partial Discharges (Corona) on the Surface," and submit the results to the Engineer before acceptance of the cable.

Insulation Shielding

The insulation shielding shall consist of a nonmetallic semiconducting EPR material extruded directly over the insulation and a 0.12-mm bare copper tape. The nonmetallic semi conducting layer shall be black-colored with properties and thickness conforming to the requirements of Table 4a of ICEA S-68-516-93-639 and Tables 14.2 and 14.3 of UL-1072. The layer shall be free stripping from the EP insulation. The 0.12-mm bare copper tape shall be helical applied with a 15 percent overlap, directly over the nonmetallic layer.

Metallic Shield

The metallic shield shall be coated copper tape, helically applied with a minimum overlap of 12.5 percent, directly over the nonmetallic layer.

Overall Jacket

The overall jacket shall be extruded black-colored Polyvinyl Chloride (PVC) material [illegible] physical properties and thickness in accordance with Section 4.4.5 and Table 4-6 of ICEA S93-639 and shall be surface printed as required by UL Standard 1072.

REGISTERED PROFESSIONAL ENGINEER
PARVIZ BOOZARPOUR
No. 17775
Exp. 9/30/10
ELECTRICAL
STATE OF CALIFORNIA

Production Testing

Production testing shall consist of the following:

A. Continuous DC Spark testing of the non-conducting stress control layer prior to extrusion of the EP insulation.
B. Mooney Viscosity, Scorch Viscosity, and Specific Gravity of each batch of the EP insulation prior to extrusion.
C. AC Voltage Withstand test for a 5-minute duration, of each finished cable at 35 kV.
D. Volume Resistivity of the nonmetallic shield.

E. DC Resistance of all insulated conductors and metallic shields.
F. Dimensional Verification of all extruded layers.
G. Absence of water in conductors and interfaces confirmed.

Cable Accessories

The manufacturer of the splices and terminations shall have a minimum of 15 years specialized in manufacturing of heat shrinkable cable accessories. The manufacturer of the splices and terminations shall be the Raychem Corporation or approved equal.
The cable splicer shall have a minimum of five years experience and be certified by the splice and cable termination manufacturer. The splicer shall provide a resume documenting his experience and qualifications to be approved on this project.

Cable Terminations

The Termination shall be IEEE 48, Class 1, heat-shrinkable cable terminations in kit form, capable of properly terminating cables specified in this section. Terminations for single-conductor cables shall consist of heat-shrinkable radiation crosslinked high dielectric constant linear stress relief material and heat-shrinkable radiation crosslinked non-tracking outer insulation. Terminations shall contain a high relative permittivity electric stress relief mastic for insulation shield cutback treatment and a heat-activated sealant for environmental sealing.
In addition to the components described above, three-conductor kits shall contain heat-shrinkable components to seal the cable jacket, phase conductors, ground wire and rejacket phase and ground conductors.

Cable Splices

Splices of high voltage cable shall be avoided if possible. Where necessary, because of constructibility reasons, splice locations shall be approved by the Engineer. In general, splices of high voltage cables shall be scheduled so that the length of cable between splices is approximately 400 meters. All 15 kV splices shall be enclosed on a 15 kV splice box (Type PB-3A). A splice shall be scheduled at the construction boundaries. Where possible, longer cable runs are encouraged. The Splices, where necessary, shall be IEEE 404, heat shrinkable cable splices in kit form, capable of properly splicing cables specified in this section. Splice kits shall contain all necessary components to reinstate primary cable insulation, metallic shielding and grounding systems and overall jacket to the equivalent of the cable itself. Splices shall be of a uniform cross-section and shall consist of heat-shrinkable radiation crosslinked insulation. The outer insulating layer shall be bonded to a conducting layer for shielding. The splice shall be rejacketed with a heavy-wall, heat-shrinkable sealant lined sleeve to provide a waterproof hot melt adhesive seal. Splices shall contain heat-shrinkable radiation cross-linked high dielectric constant linear stress relief material. Splices shall contain a high relative permittivity electric stress relief mastic for insulation shield cutback treatment and a heat-activated sealant for environmental sealing. Kits shall allow splicing cables with different types of insulation, conductor sizes, and shielding construction. Kits shall accommodate commercially available standard connectors.

Cable End Sealing Caps

The end seal caps shall be heat-shrinkable crosslinked polymeric end sealing caps capable of sealing cables specified in this section. End caps shall be precoated with a heat activated sealant.

DC High Potential Test

Perform DC high potential test of each conductor in accordance with NEMA WC 5.

REGISTERED PROFESSIONAL ENGINEER
PARVIZ BOOZARPOUR
No. 12735
Exp. 9/30/10
ELECTRICAL
STATE OF CALIFORNIA

DIST	COUNTY	ROUTE	KILOMETER POST TOTAL PROJECT	SHEET No	TOTAL SHEETS
04	Ala	80	1.6/2.7	491	643

REGISTERED ELECTRICAL ENGINEER 05/15/06 DATE

1-29-07
PLANS APPROVAL DATE

PB POWER, Inc.
A Parsons Brinckerhoff Company
303 Second St., Suite 700N
San Francisco, CA 94107-1317

The State of California or its officers or agents shall not be responsible for the accuracy or completeness of electronic copies of this plan sheet.

To get to the Caltrans web site, go to: http://www.dot.ca.gov

Caltrans Metric

NOTES:

1. References:
   - For Mole Substation grounding plan, see sheet AE-4.
   - For duct banks and manholes plans, see sheets E-80 through E-92.
   - For typical manhole and duct bank details, see sheet E-119.
   - For girder westbound grounding plan, see sheet E-42.
   - For girder eastbound grounding plan, see sheet E-74.
   - ~~For Pier E22L, see sheet E-89.~~
   - For Pier E22R, see sheet E-98.

2. SHORT CIRCUIT STUDY Shall Be Performed for The Temporary 15 KV Cable.

SHEET NOTES:

(1) 500 kcmil bare copper system grounding conductor routed in the 12.47 kV duct banks and through the 12 kV manholes as shown.

(2) At Piers E22L and E22R, two 250 kcmil bare copper ground conductors shall be exothermically welded to the 500 kcmil bare copper system grounding conductor and exothermically welded to the ~~bent footing collar~~. Embed the 500 kcmil bare copper system grounding conductor in the bent column and run up to the girder to be connected to the two ground bars located on each side of the bent.

→ PILE SHEAR RINGS CCO #50

(3) Wherever the 600 V, Non-Caltrans Utilities and the TOS/COM duct banks separate from the 12 kV duct bank, #4/0 AWG bare copper grounds shall be exothermically welded to the 500 kcmil system grounding conductor and routed to the 600 V, the Non-Caltrans Utilities and the TOS/COM manholes respectively.

(4) 250 kcmil bare copper system grounding conductor routed in the 600 V duct banks from piers E22R and E22L to Manhole-10, and from Manhole-10 in the 600 V duct bank. Coil 3000 mm long for connection by others.

(5) Terminate 12.47 KV (3 #4/0) Cable TO CKT # 52-23N as Shown in E-126

(6) Temporary splicing as directed by ENGINEER.

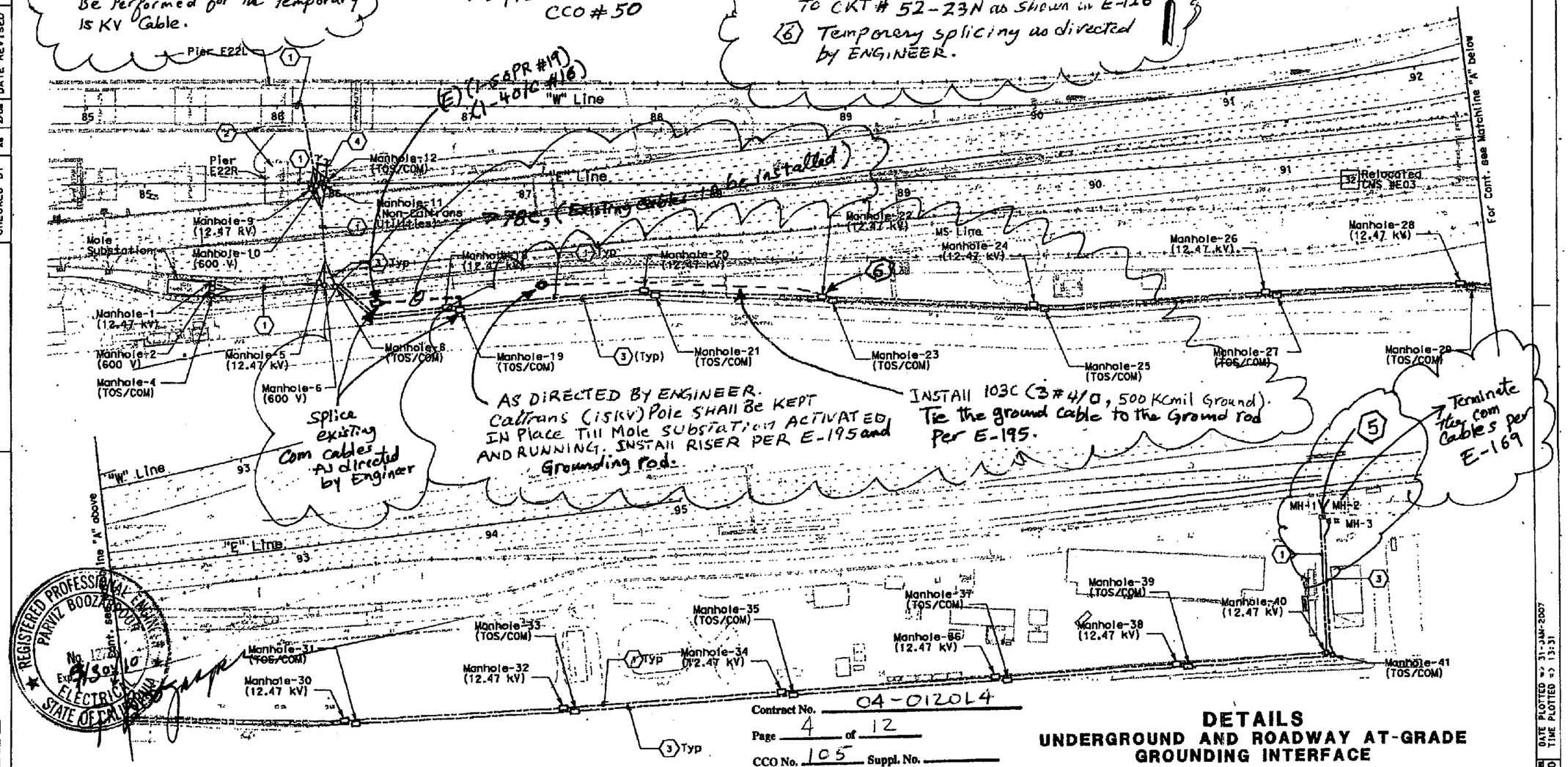

REGISTERED PROFESSIONAL ENGINEER PARVIZ BOOZARPOUR No. 12[illegible] Exp. 9/30/10 ELECTRICAL STATE OF CALIFORNIA

Contract No. 04-0120L4
Page 4 of 12
CCO No. 105 Suppl. No.
Contractor MCM
Res. Engr. B. Ghafghazi

DETAILS
UNDERGROUND AND ROADWAY AT-GRADE GROUNDING INTERFACE
SCALE: 1:1000

E-120

STATE OF CALIFORNIA - DEPARTMENT OF TRANSPORTATION
Caltrans

DESIGN OVERSIGHT: BEHZAD GOLEMOHAMMADI

CALCULATED/DESIGNED BY: FK | DATE 2/06 | REVISED BY
CHECKED BY: AB | 2/06 | DATE REVISED

LAST REVISION 00-00-00 | DATE PLOTTED => 31-JAN-2007 | TIME PLOTTED => 13:31

FOR REDUCED PLANS ORIGINAL SCALE IS IN MILLIMETERS 0 20 40 60 80

DGN FILE => 4012 0lua120.dgn
USERNAME => trrichf

CU 04251 | EA 0120L1

DIST	COUNTY	ROUTE	KILOMETER POST TOTAL PROJECT	SHEET No.	TOTAL SHEETS
04	Ala	80	1.6/2.7	556	643

REGISTERED ELECTRICAL ENGINEER 05/15/06 DATE

1-29-07
PLANS APPROVAL DATE

PB POWER, Inc.
A Parsons Brinckerhoff Company
303 Second St., Suite 700N
San Francisco, CA 94107-1317

The State of California or its officers or agents shall not be responsible for the accuracy or completeness of electronic copies of this plan sheet.

To get to the Caltrans web site, go to: http://www.dot.ca.gov

Contract No. 04-0120L4
Page 5 of 12
CCO No. 105 Suppl. No.
Contractor MCM
Res. Engr. B. Ghafghazi

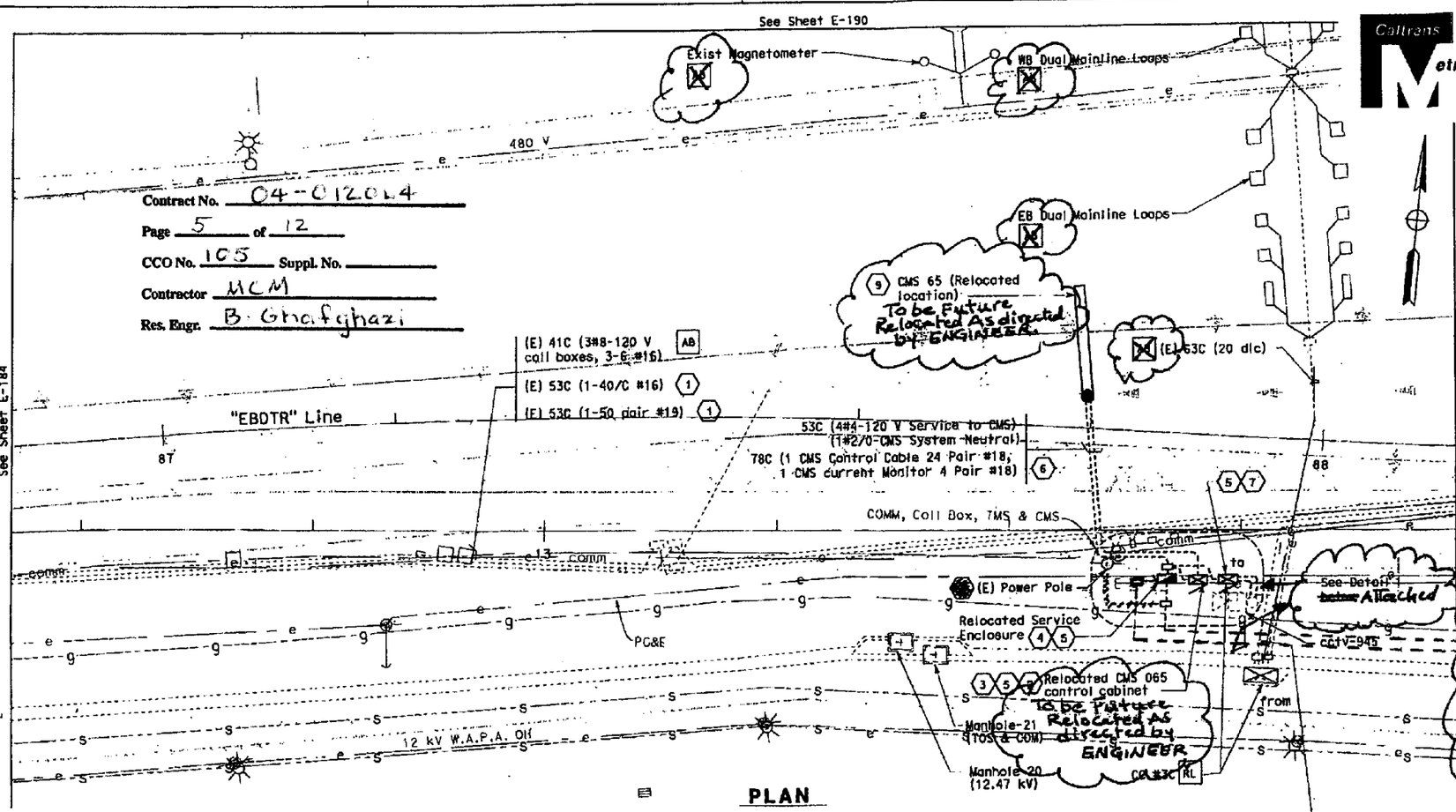

PLAN

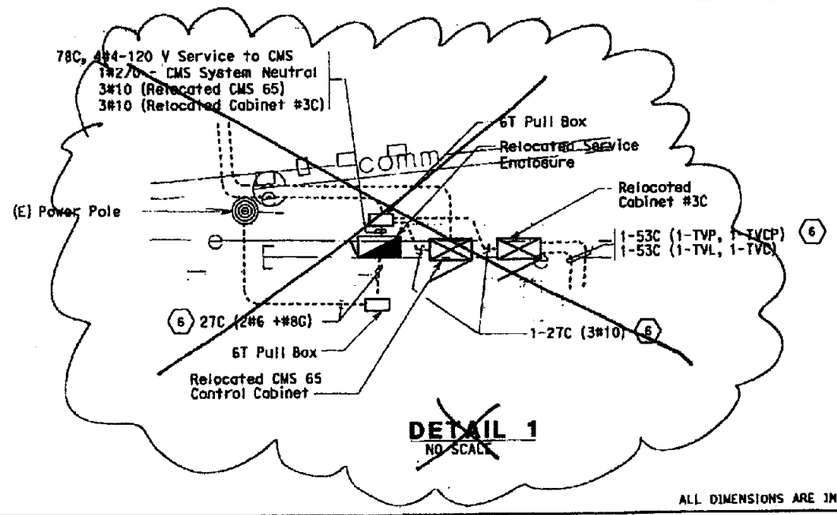

DETAIL 1
NO SCALE

SHEET NOTES:

1. Once the new duct bank has been completed and all cables have been installed and connected, these conduits shall be abandoned and the cables removed. Removed cables shall become the property of the contractor.
2. Controller cabinet shall be provided with wireless communication Type GPRS. See special provisions.
3. Contractor to relocate (E) CMS 65 controller cabinet to location as shown on this sheet. For existing location, see sheet E-186 and E-193.
4. Contractor to relocate (E) Service panel enclosure Type III-AF to location as shown on this sheet. For existing location, see E-193. Paid for under ~~seperate~~ bid item 4S.
5. Contractor shall provide concrete foundation pads per Caltrans ES-2D and ES-3C Install conduits as required and connections per special provisions. Paid for under ~~seperate~~ bid item 4S.
6. Contractor to protect installation for duration as specified by the Engineer.
7. Controller cabinet shall be provided with wireless CCTV equipment.
8. ~~Contractor to provide riser conduit and connections to (E) 480 V 0/H conductors. Install 0/H non fusible disconnect switch.~~
9. Relocation of CMS sign No. 65. Paid for under ~~seperate~~ bid item 4S.

NOTES:

1. References:
   - For underground and roadway at-grade, plans, manholes and duct bank sections, see sheets starting at E-80.
   - TOS equipment is shown for routing only. For details on when TOS equipment shall be installe, see special provisions.
2. Contractor shall locate all the existing equipment, conduits and pull boxes shown on plan prior to installing any new electrical item. Removed devices shall become the property of the contractor
3. Contractor shall verify exact location of existing gas and sewer outfall lines. For additional information, see utility plans.
4. All Temporary Underground and Roadway At-Grade work is to remain in place at the end of the contract.

REGISTERED PROFESSIONAL ENGINEER PARVIZ BOOZARPOUR No. 12730 Exp. 2/30/16 ELECTRICAL STATE OF CALIFORNIA

TEMPORARY UNDERGROUND AND ROADWAY AT-GRADE
(LIGHTING AND ELECTRICAL SYSTEMS)

SCALE: 1:200

E-185

ALL DIMENSIONS ARE IN MILLIMETERS UNLESS OTHERWISE SHOWN

FOR REDUCED PLANS ORIGINAL SCALE IS IN MILLIMETERS 0 20 40 60 80

DGN FILE =>40120lua185.dgn
USERNAME =>trcarol

CU 04251 | EA 0120L1

DATE PLOTTED => 06-FEB-2007
TIME PLOTTED => 12:51

LAST REVISION 00-00-00

STATE OF CALIFORNIA - DEPARTMENT OF TRANSPORTATION
Caltrans

DESIGN OVERSIGHT
BEHZAD GOLEMOHAMMADI

CALCULATED/DESIGNED BY
CHECKED BY
FK AB
DATE 2/06 2/06
REVISED BY
DATE REVISED

DIST	COUNTY	ROUTE	KILOMETER POST TOTAL PROJECT	SHEET NO	TOTAL SHEETS
04	Ala	80	1.6/2.7	557	643

REGISTERED ELECTRICAL ENGINEER — 05/15/06 DATE

1-29-07
PLANS APPROVAL DATE

PB POWER, Inc.
A Parsons Brinckerhoff Company
303 Second St., Suite 700N
San Francisco, CA 94107-1317

The State of California or its officers or agents shall not be responsible for the accuracy or completeness of electronic copies of this plan sheet.

To get to the Caltrans web site, go to: http://www.dot.ca.gov

Contract No. 04-012014
Page 6 of 12
CCO No. 105 Suppl. No.
Contractor MCM
Res. Engr. B. Ghafghazi

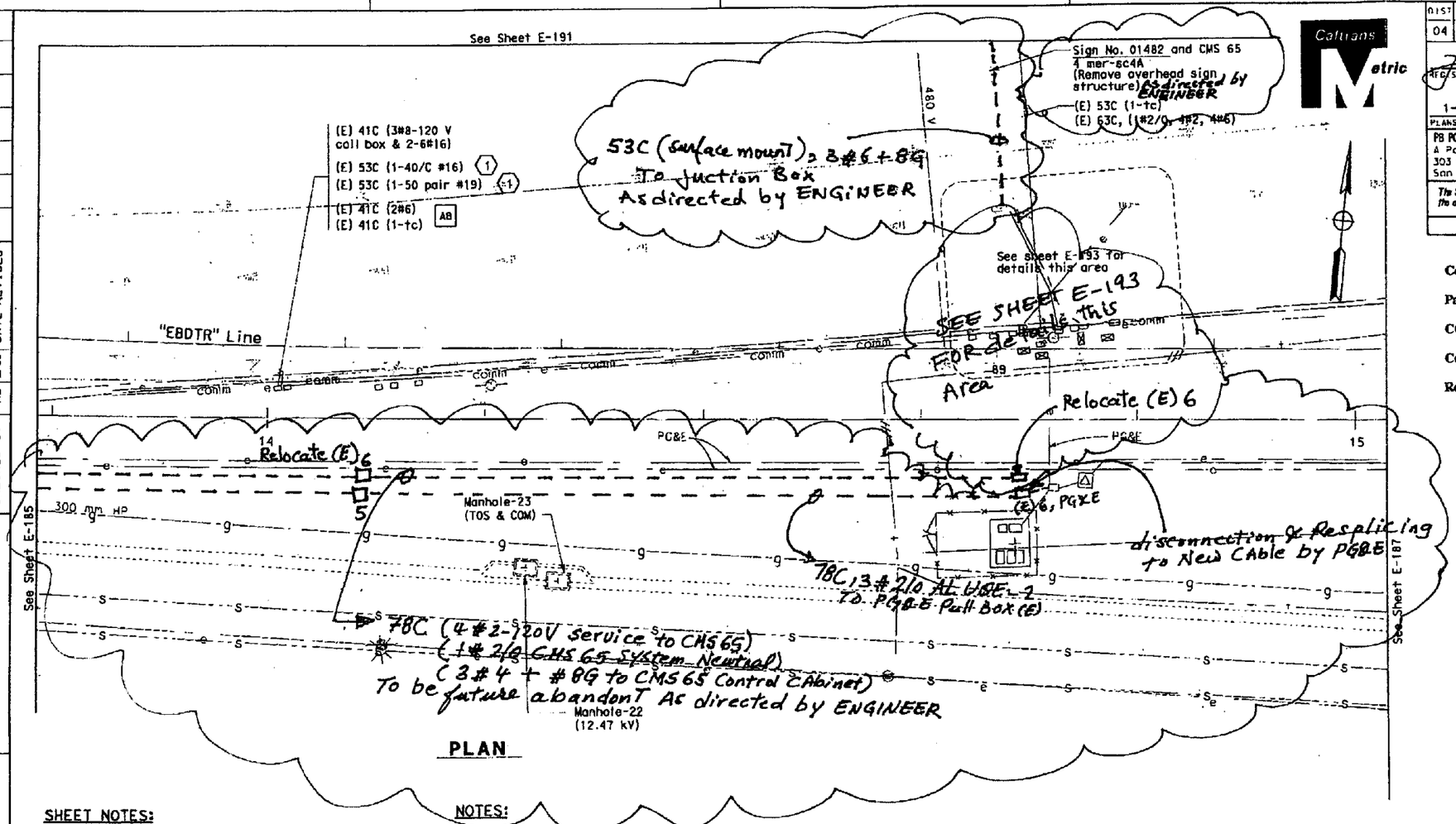

PLAN

SHEET NOTES:

1. Once the new duct bank has been completed and all cables have been installed and connected, these conduits shall be abandoned and the cables removed. Removed cables shall become the property of the contractor. Pull boxes shall be removed and become the property of the contractor.

NOTES:

1. References:
   - For underground and roadway at grade, plans, manholes, duct bank sections, see sheets E-80 thru E-122.
   - TOS equipment is shown for conduit routing only. For additional details on when TOS equipment shall be installed, see Special Provisions.
2. Contractor shall verify all existing installations prior to proceeding with new installation.
3. Contractor shall verify exact location of existing gas and sewer outfall lines. For additional information, see utility plans.
4. All Temporary Underground and Roadway At-Grade work is to remain in place at the end of the contract.

REGISTERED PROFESSIONAL ENGINEER PARVIZ BOOZARPOUR No. 12735 Exp. 9/30/10 ELECTRICAL STATE OF CALIFORNIA

TEMPORARY UNDERGROUND AND ROADWAY AT-GRADE
(LIGHTING AND ELECTRICAL SYSTEMS)
SCALE: 1:200

E-186

THIS PLAN ACCURATE FOR ELECTRICAL WORK ONLY.

ALL DIMENSIONS ARE IN MILLIMETERS UNLESS OTHERWISE SHOWN

FOR REDUCED PLANS ORIGINAL SCALE IS IN MILLIMETERS 0 20 40 60 80

DGN FILE => 0012014ua186.dgn
USERNAME => traikeal

CU 04251 EA 0120L1

DATE PLOTTED => 31-JAN-2007
TIME PLOTTED => 14:00

REV. REVISION DATE 00-00-00

STATE OF CALIFORNIA - DEPARTMENT OF TRANSPORTATION
Caltrans

DESIGN OVERSIGHT BEHZAD GOLEMOHAMMADI

CALCULATED/DESIGNED BY | CHECKED BY | FK 2/06 | AB 2/06 | DATE | REVISED BY | DATE REVISED

DIST	COUNTY	ROUTE	KILOMETER POST TOTAL PROJECT	SHEET NO	TOTAL SHEETS
04	Ala	80	1.6/2.7	558	643

REGISTERED ELECTRICAL ENGINEER 05/15/06 DATE

1-29-07
PLANS APPROVAL DATE

PB POWER, Inc.
A Parsons Brinckerhoff Company
303 Second St., Suite 700N
San Francisco, CA 94107-1317

REGISTERED PROFESSIONAL ENGINEER JENS ERLINGSSON No. 8249 Exp. 6/30/08 ELECTRICAL STATE OF CALIFORNIA

The State of California or its officers or agents shall not be responsible for the accuracy or completeness of electronic copies of this plan sheet.

To get to the Caltrans web site, go to: http://www.dot.ca.gov

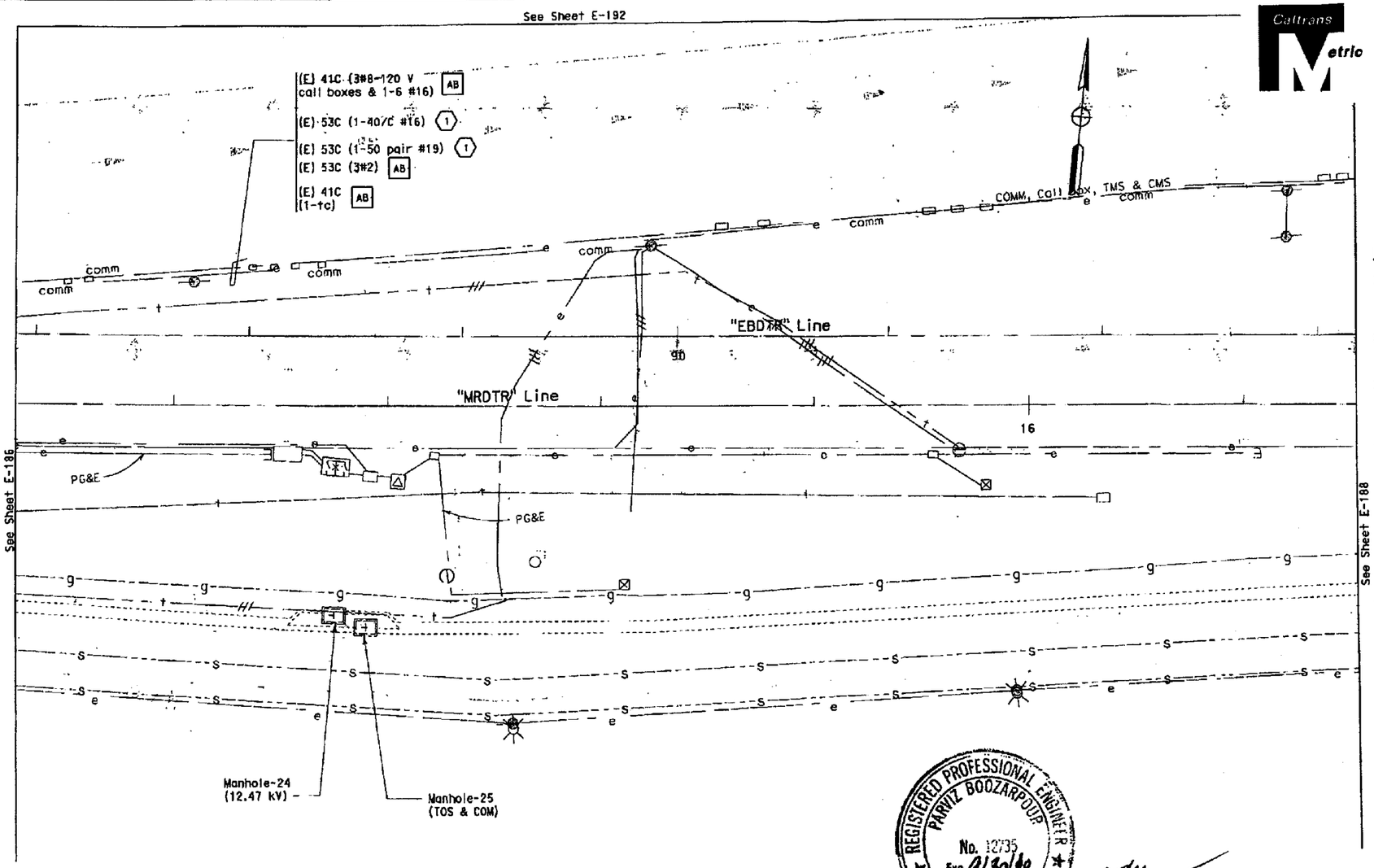

PLAN

NOTES:

1. References:
   - For Underground and Roadway at Grade Plans, Manholes, Duct Bank sections, see sheets E-80 thru E-122.
2. Contractor shall verify all existing installations prior to proceeding with new installation.
3. Contractor shall verify exact location of existing gas and sewer outfall lines. For additional information, see utility plans.
4. All Temporary Underground and Roadway At-Grade work is to remain in place at the end of the contract.

SHEET NOTES:

(1) Once the new duct bank has been completed and all cables have been installed and connected, these conduits shall be abandoned and the cables removed. Removed cables shall become the property of the contractor. Pull boxes shall be removed and become the property of the contractor.

Contract No. 04-0120L4
Page 7 of 12
CCO No. 105 Suppl. No.
Contractor MCM
Res. Engr. B. Ghafghazi

REGISTERED PROFESSIONAL ENGINEER PARVIZ BOOZARPOUR No. 12735 Exp. 9/30/10 ELECTRICAL STATE OF CALIFORNIA

TEMPORARY UNDERGROUND AND ROADWAY AT-GRADE
(LIGHTING AND ELECTRICAL SYSTEMS)
SCALE: 1:200

E-187

STATE OF CALIFORNIA - DEPARTMENT OF TRANSPORTATION
Caltrans

DESIGN OVERSIGHT: BEHZAD GOLEMOHAMMADI
CALCULATED/DESIGNED BY: FK
CHECKED BY: AB
DATE REVISED: 2/06
REVISED BY: 2/06

THIS PLAN ACCURATE FOR ELECTRICAL WORK ONLY.

ALL DIMENSIONS ARE IN MILLIMETERS UNLESS OTHERWISE SHOWN

FOR REDUCED PLANS ORIGINAL SCALE IS IN MILLIMETERS 0 20 40 60 80

DGN FILE => 40120lua187.dgn
USERNAME => trnjkaai

CU 04251 | EA 0120L1

LAST REVISION 00-00-00
DATE PLOTTED => 31-JAN-2007
TIME PLOTTED => 14:00

DIST	COUNTY	ROUTE	KILOMETER POST TOTAL PROJECT	SHEET No	TOTAL SHEETS
04	Ala	80	1.6/2.7	559	643

REGISTERED ELECTRICAL ENGINEER 05/15/06 DATE

1-29-07
PLANS APPROVAL DATE

REGISTERED PROFESSIONAL ENGINEER JENS ERLINGSSON No. 8241 Exp. 9/30/08 ELECTRICAL STATE OF CALIFORNIA

PB POWER, Inc.
A Parsons Brinckerhoff Company
303 Second St., Suite 700N
San Francisco, CA 94107-1317

The State of California or its officers or agents shall not be responsible for the accuracy or completeness of electronic copies of this plan sheet.

To get to the Caltrans web site, go to: http://www.dot.ca.gov

Caltrans Metric

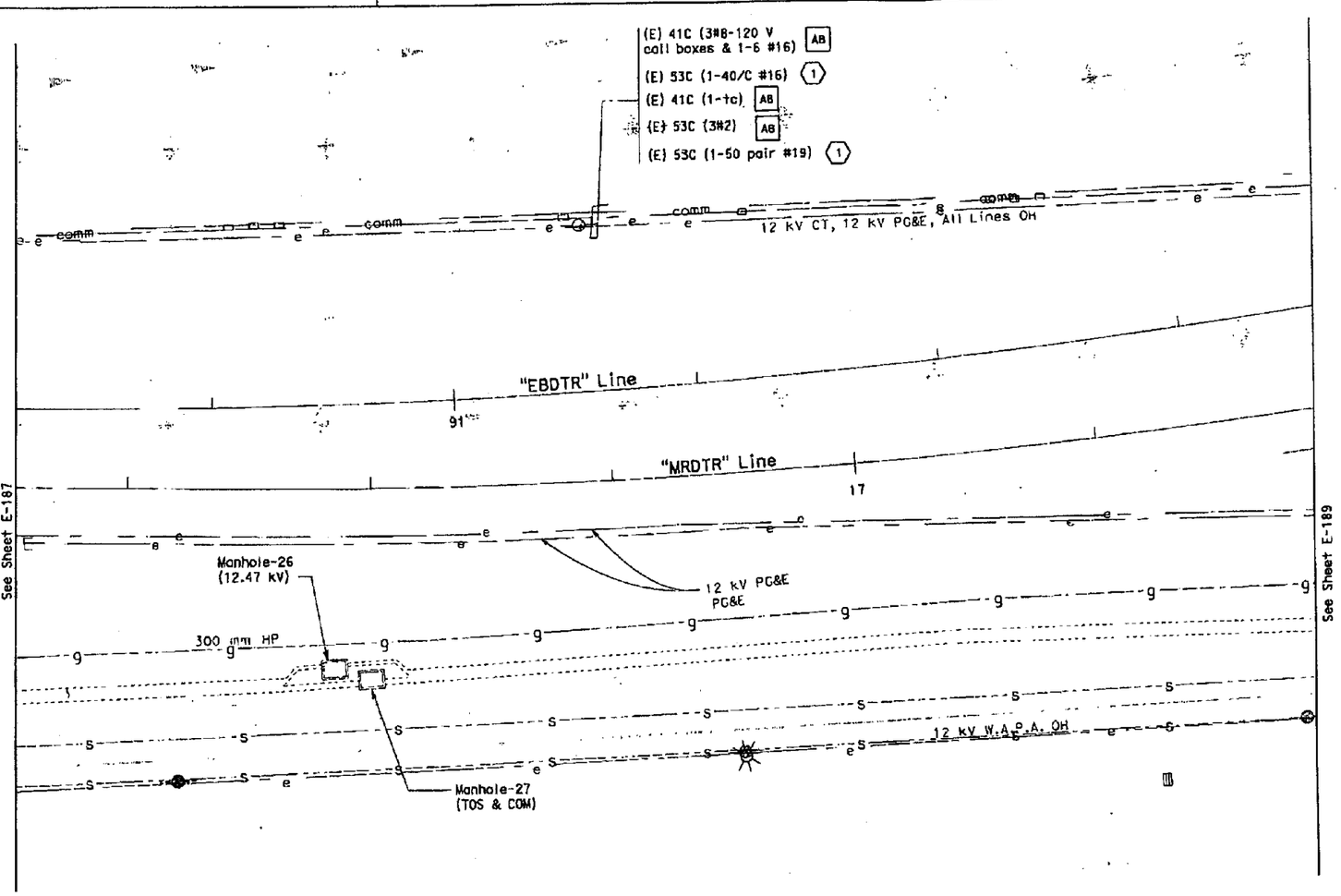

PLAN

NOTES:

1. References:
   - For Underground and Roadway at Grade Plans, Manholes, Duct Bank sections, see sheets E-80 thru E-122.
2. Contractor shall verify all existing installations prior to proceeding with new installation.
3. Contractor shall verify exact location of existing gas and sewer outfall lines. For additional information, see utility plans.
4. All Temporary Underground and Roadway At-Grade work is to remain in place at the end of the contract.

SHEET NOTES:

(1) Once the new duct bank has been completed and all cables have been installed and connected, these conduits shall be abandoned and the cables removed. Removed cables shall become the property of the contractor. Pull boxes shall be removed and become the property of the Contractor.

Contract No. 04-0120L4
Page 8 of 12
CCO No. 105 Suppl. No.
Contractor MCM
Res. Engr. B. Ghafghazi

REGISTERED PROFESSIONAL ENGINEER PARVIZ BOOZARPOUR No. 12755 Exp. 9/30/10 ELECTRICAL STATE OF CALIFORNIA

TEMPORARY UNDERGROUND AND ROADWAY AT-GRADE
(LIGHTING AND ELECTRICAL SYSTEMS)

SCALE: 1:200

E-188

THIS PLAN ACCURATE FOR ELECTRICAL WORK ONLY.

ALL DIMENSIONS ARE IN MILLIMETERS UNLESS OTHERWISE SHOWN

FOR REDUCED PLANS ORIGINAL SCALE IS IN MILLIMETERS 0 20 40 60 80

OGN FILE =>40120lua188.dgn
USERNAME =>lrmikesl

CU 04251 | EA 0120L1

STATE OF CALIFORNIA - DEPARTMENT OF TRANSPORTATION
Caltrans

DESIGN OVERSIGHT: BEHZAD GOLEMOHAMMADI
CALCULATED/DESIGNED BY | CHECKED BY
FK | AB | DATE 2/06 | REVISED BY | DATE REVISED

DATE PLOTTED => 31-JAN-2007
TIME PLOTTED => 14:01
LAST REVISION 00-00-00

DIST	COUNTY	ROUTE	KILOMETER POST TOTAL PROJECT	SHEET No	TOTAL SHEETS
04	Ala	80	1.6/2.7	560	643

REGISTERED ELECTRICAL ENGINEER 05/15/06 DATE

1-29-07
PLANS APPROVAL DATE

REGISTERED PROFESSIONAL ENGINEER JENS ERLINGSSON No. 3249 Exp. 9/30/08 ELECTRICAL STATE OF CALIFORNIA

PB POWER, Inc.
A Parsons Brinckerhoff Company
303 Second St., Suite 700N
San Francisco, CA 94107-1317

The State of California or its officers or agents shall not be responsible for the accuracy or completeness of electronic copies of this plan sheet.

To get to the Caltrans web site, go to http://www.dot.ca.gov

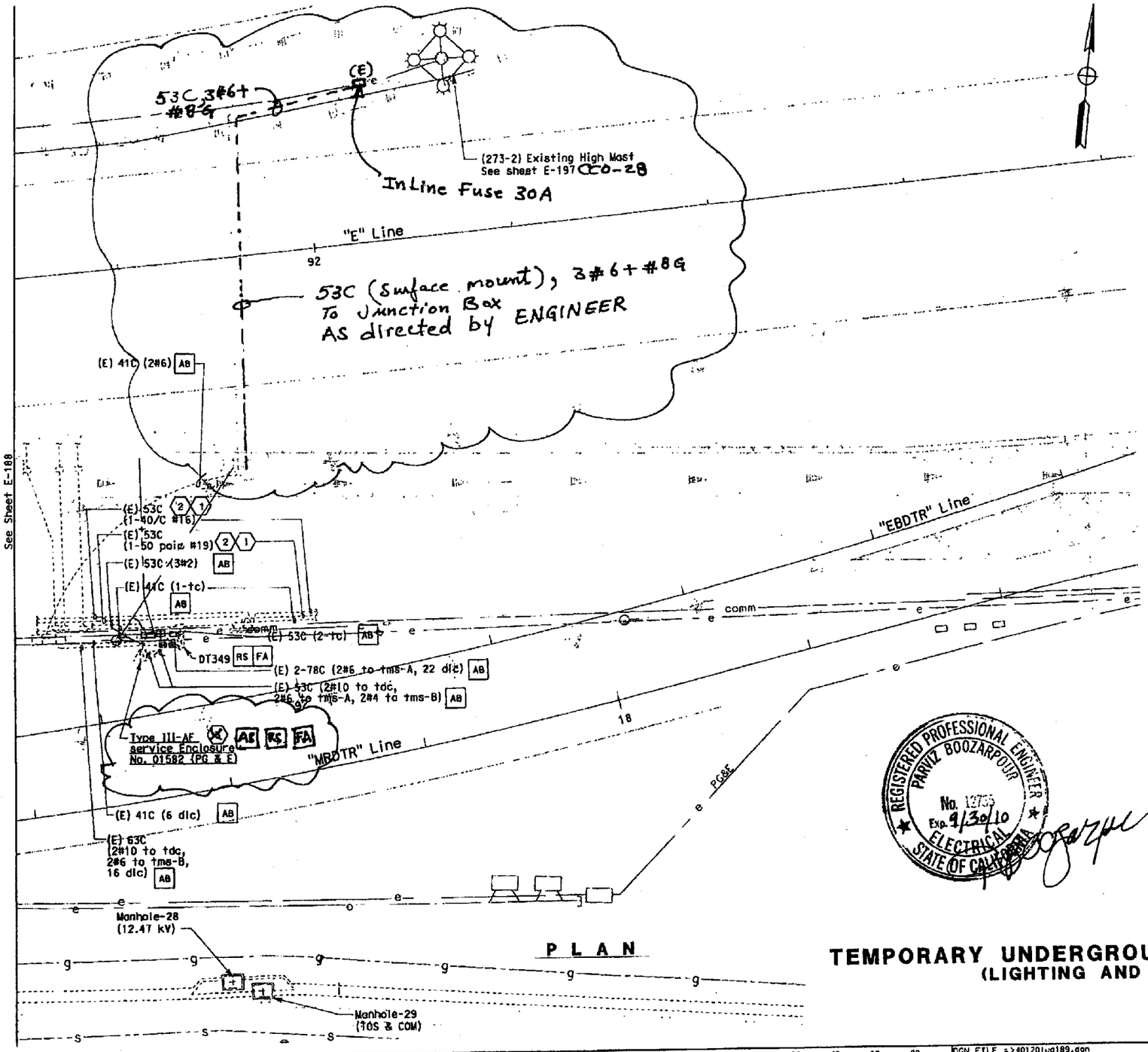

PLAN

NOTES:

1. References:
   - For underground and roadway at grade, plans, manholes and duct bank sections, see sheets E-80 thru E-122
2. Contractor shall verify all existing installations prior to proceeding with new installation.
3. Contractor shall verify exact location of existing gas and sewer outfall lines. For additional information, see utility plans.
4. TOS equipment is shown for conduit routing only. For details on when TOS equipment shall be installed see special provisions.
5. All Temporary Underground and Roadway At-Grade work is to remain in place at the end of the contract.

SHEET NOTES:

(1) The conduits with the 40/C #16 cable and the 50 pair #19 cable respectively, continue to the existing Maintenance Buiding. Field to verify

(2) Once the new duct bank has been completed and all cables have been installed and connected, these conduits shall be abandoned and the cables removed. Removed cables shall become the property of the contractor. Pull boxes shall be removed and become the property of the contractor.

(3) ~~Service enclosure cabinet shall be relocated as shown on sheet E-185.~~

REGISTERED PROFESSIONAL ENGINEER PARVIZ BOOZARPOUR No. 12755 Exp. 9/30/10 ELECTRICAL STATE OF CALIFORNIA

Contract No. 04-0120L4
Page 9 of 12
CCO No. 105 Suppl. No.
Contractor MCM
Res. Engr. B. Ghafghazi

TEMPORARY UNDERGROUND AND ROADWAY AT-GRADE
(LIGHTING AND ELECTRICAL SYSTEMS)

SCALE: 1:200

E-189

STATE OF CALIFORNIA - DEPARTMENT OF TRANSPORTATION
Caltrans

DESIGN OVERSIGHT: BEHZAD GOLEMOHAMMADI

CALCULATED/DESIGNED BY | CHECKED BY | FK | AB | DATE 2/06 | REVISED BY | DATE REVISED

LAST REVISION 00-00-00 | DATE PLOTTED => 31-JAN-2007 | TIME PLOTTED => 15:46

FOR REDUCED PLANS ORIGINAL SCALE IS IN MILLIMETERS 0 20 40 60 80

DGN FILE =>40120lca189.dgn
USERNAME =>trphila

CU 04251 | EA 0120L1

DIST	COUNTY	ROUTE	KILOMETER POST TOTAL PROJECT	SHEET No	TOTAL SHEETS
04	Ala	80	1.6/2.7	562	643

REGISTERED ELECTRICAL ENGINEER 05/15/06 DATE

1-29-07
PLANS APPROVAL DATE

PB POWER, Inc.
A Parsons Brinckerhoff Company
303 Second St., Suite 7004
San Francisco, CA 94107-1317

The State of California or its officers or agents shall not be responsible for the accuracy or completeness of electronic copies of this plan sheet.

To get to the Caltrans web site, go to http://www.dot.ca.gov

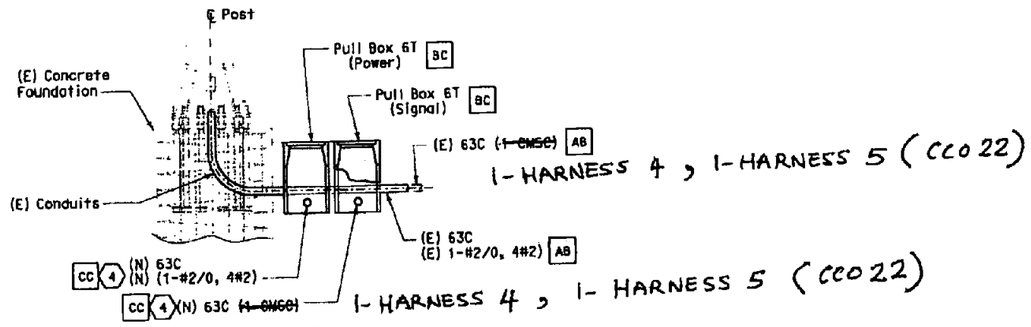

SECTION-DETAIL 3
No scale

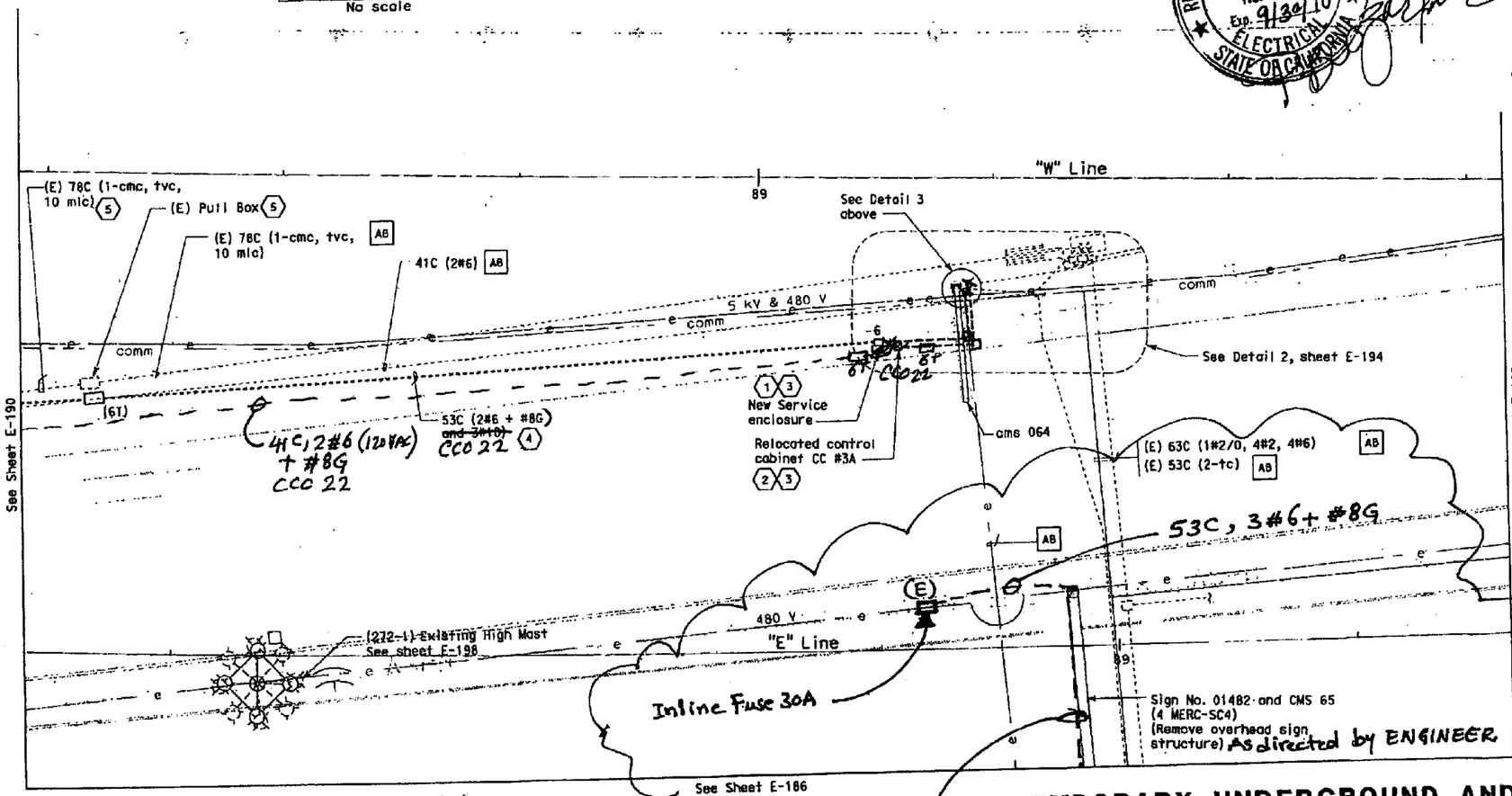

SHEET NOTES:

1. Contractor to provide and install new Service enclosure Type III-3A See sheet E-196.
2. Contractor to relocate (E) Control cabinet CC #3A as shown on this sheet.
3. Contractor to provide concrete foundation pads per Caltrans ES-20 and ES-3C. Contractor to install conduits and connnections per special provisions.
4. Contractor to protect installation for duration as specified by the Engineer.
5. Contractor to cut (E) 10 mlc cable at this location and pull out cable back to adjacent (E) magnetomer pull box, see Detail 1 sheet E-194.

NOTES:

1. References:
   - TOS are shown for conduit routing only. For details of TOS controllers installed, see Special Provisions.
   - For underground and Roadway At-Grade, Plans, Manholes and Duct Bank Sections, see sheets starting at E-80.
2. Contractor shall locate all existing installations prior to proceeding with new installation.
3. All Temporary Underground and Roadway At-Grade work is to remain in place at the end of the contract.

REGISTERED PROFESSIONAL ENGINEER PARVIZ BOOZARPOUR No. 12735 Exp. 9/30/10 ELECTRICAL STATE OF CALIFORNIA

TEMPORARY UNDERGROUND AND ROADWAY AT-GRADE
(LIGHTING AND ELECTRICAL SYSTEMS EXISTING NORTH SIDE)

53C (surface mount), 3#6+#8G To junction Box As directed by ENGINEER

SCALE: 1:200

E-191

Contract No. 04-0120L4
Page 10 of 12
CCO No. 105 Suppl. No.
Contractor MCM
Res. Engr. B. Ghafghazi

STATE OF CALIFORNIA - DEPARTMENT OF TRANSPORTATION
Caltrans

DESIGN OVERSIGHT: BEHZAD GOLEMOHAMMADI

CALCULATED/ DESIGNED BY	FK	DATE 2/06	REVISED BY	DATE REVISED
CHECKED BY	AB	2/06		

FOR REDUCED PLANS ORIGINAL SCALE IS IN MILLIMETERS 0 20 40 60 80

DGN FILE => 401201u0191.dgn
USERNAME => trcarol

CU 04251 | EA 0120L1

DATE PLOTTED => 06-FEB-2007
TIME PLOTTED => 12:51

REV. REVISION 00-00-00

DIST	COUNTY	ROUTE	KILOMETER POST TOTAL PROJECT	SHEET No	TOTAL SHEETS
04	Ala	80	1.6/2.7	564	643

REGISTERED ELECTRICAL ENGINEER 05/15/06 DATE

1-29-07
PLANS APPROVAL DATE

REGISTERED PROFESSIONAL ENGINEER JENS ERLINGSSON No. 8749 Exp. 9/30/08 ELECTRICAL STATE OF CALIFORNIA

PB POWER, Inc.
A Parsons Brinckerhoff Company
303 Second St., Suite 700N
San Francisco, CA 94107-1317

The State of California or its officers or agents shall not be responsible for the accuracy or completeness of electronic copies of this plan sheet.

To get to the Caltrans web site, go to http://www.dot.ca.gov

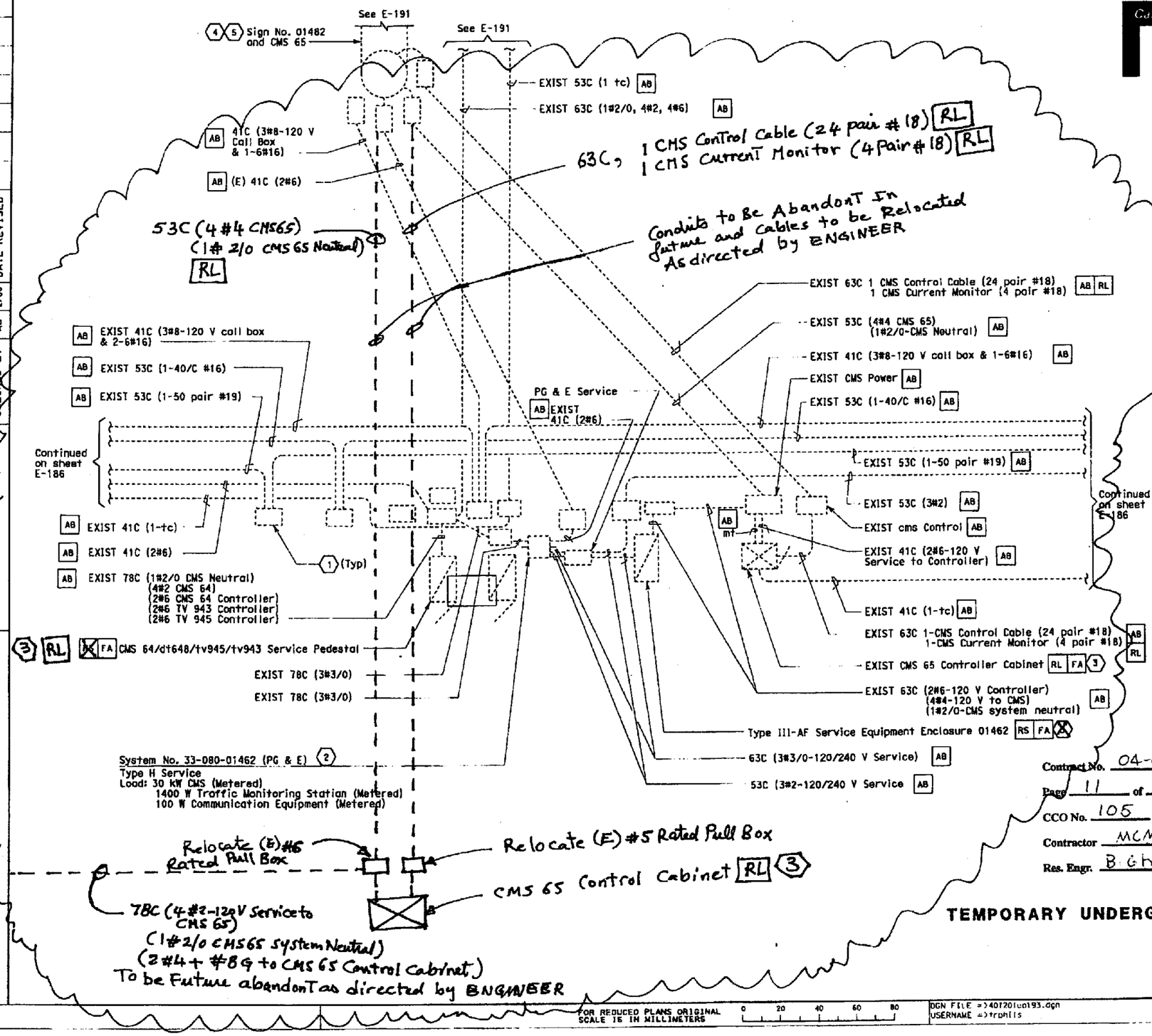

SHEET NOTES:

1. Pull box shall be removed and become the property of the Contractor.
2. To be ~~removed by others~~, disconnect by PG&E.
3. Relocated to location shown on E-185. As directed by ENGINEER.
4. CMS 65 shall be relocated to location shown on E-185, As directed by ENGINEER.
5. ~~Sign panels shall be removed and salvaged to a location determined by the Engineer.~~

NOTES:

1. References:
   - TOS are shown for conduit routing only. For typical details of TOS controllers and devices, see Special Provisions.
2. Contractor shall verify all the existing equipment, conduits and pull boxes shown on plan, prior to installing any new electrical item.
3. All Temporary Underground and Roadway At-Grade work is to remain in place at the end of the contract.

REGISTERED PROFESSIONAL ENGINEER PARVIZ BOOZARPOUR No. 12735 Exp. 9/30/10 ELECTRICAL STATE OF CALIFORNIA

Contract No. 04-0120L4
Page 11 of 12
CCO No. 105 Suppl. No.
Contractor MCM
Res. Engr. B. Ghafghazi

DETAILS
TEMPORARY UNDERGROUND AND ROADWAY AT-GRADE PARTIAL PLAN
NO SCALE

E-193

DATE	FK	REVISED BY	DATE REVISED
	2/06	AB	2/06

CALCULATED/DESIGNED BY
CHECKED BY
DESIGN OVERSIGHT BERZAD COLEMON (ANNOT)

STATE OF CALIFORNIA - DEPARTMENT OF TRANSPORTATION

Caltrans

FOR REDUCED PLANS ORIGINAL SCALE IS IN MILLIMETERS 0 20 40 60 80

DGN FILE => 4012 0lu0193.dgn
USERNAME => trphils

CU 04251 | EA 0120L1

LAST REVISION 00-00-00
DATE PLOTTED => 31-JAN-2007
TIME PLOTTED => 15:47

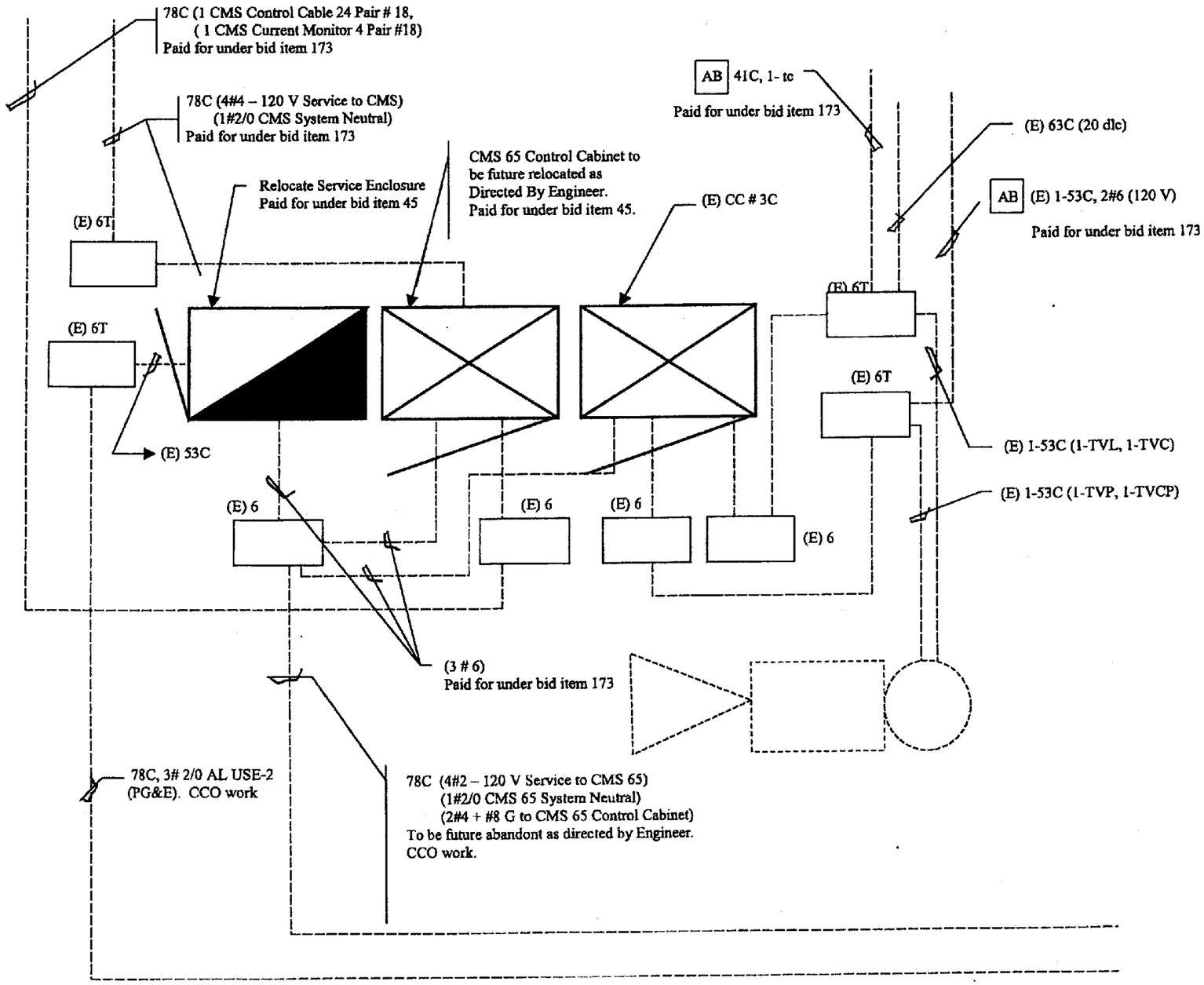

Contract No. 04-012014
Page 12 of 12
CCO No. 105 Suppl. No.
Contractor MCM
Res. Engr. B. Ghafghazi

REGISTERED PROFESSIONAL ENGINEER
PARVIZ BOOZARPOUR
No. 12755
Exp. 9/30/10
ELECTRICAL
STATE OF CALIFORNIA

DETAIL 1
NO SCALE

STATE OF CALIFORNIA - DEPARTMENT OF TRANSPORTATION

CONTRACT CHANGE ORDER MEMORANDUM

DATE: 4/8/2009 Page 1 of 1

TO: AMER BATA / BEN GHAFGHAZI	FILE: E.A. 04 - 0120L4
FROM: BEN GHAFGHAZI	CO-RTE-PM ALA-80-1.6/2.7
	FED. NO. NO FED AID
CCO#: 105 SUPPLEMENT#: 0 Category Code: CBPC	CONTINGENCY BALANCE (incl. this change) $7,422,556.80
COST: $198,341.34 INCREASE ☑ DECREASE ☐	HEADQUARTERS APPROVAL REQUIRED? ☐ YES ☑ NO
SUPPLEMENTAL FUNDS PROVIDED: $0.00	IS THIS REQUEST IN ACCORDANCE WITH ENVIRONMENTAL DOCUMENTS? ☑ YES ☐ NO
CCO DESCRIPTION: Temporary electrical work.	**PROJECT DESCRIPTION:** Construct bridge, roadway, building and electrical system.

Original Contract Time:	Time Adj. This Change:	Previously Approved CCO Time Adjustments:	Percentage Time Adjusted: (including this change)	Total # of Unreconciled Deferred Time CCO(s): (including this change)
810 Day(s)	DEF Day(s)	184 Day(s)	23 %	11

THIS CHANGE ORDER PROVIDES FOR:

Supplying temporary power and communications to existing Mole Substation, CMS 65, and existing sign structures at EBDTR Sta. 89+00 and 91+90. Work shall be as specified on sheets 2 of 12 through 12 of 12 of the CCO. All work will be in accordance with Section 86, "Signals, Lighting and Electrical Systems," of the Standard Specifications.

This change is necessary keep the existing facilities in operation during construction of eastbound detour (EBDTR Line) and maintenance road detour (MRDTR Line) and until the future Oakland Touchdown 2 contract begins. Existing power and communications for facilities along Maintenance Road and EB 80 will be removed during construction of the detours. The contract plans do not require the contractor to remove existing power poles on Maintenance Road before constructing the MRDTR. These power poles provide temporary power to existing facilities noted above. The contractor planned to leave the existing poles in place and construct the MRDTR around the poles. This will create a safety concern because the existing power poles fall in the middle of the new MRDTR. This CCO requires the contractor to remove the power poles and maintain power to existing facilities through other sources. Permanent power and communications will be installed on the Oakland Touchdown 2 project and therefore the existing facilities must be kept in operation until that then.

This work will be paid as Extra Work at Force Account of $60,000.00 for providing 15 KV cable and performing a short circuit study, and Extra Work at Agreed Lump Sum of $138,341.34 for providing temporary power and communication. Total cost of this change is $198,341.34, which can be financed from the contingency fund.

This change has been discussed with Parviz Boozarpour of Electrical Design, and Rene Forteleza of Electrical Maintenance.

Adjustment of contract time is deferred pending completion of the work specified in this change as it may affect the controlling operation. Determination of a commensurate time extension will be made in accordance with Section 10-1.14, "Progress Schedule (Critical Path Method)," of the Special Provisions and Section 8-1.07, "Liquidated Damages," of the Standard Specifications.

CONCURRED BY:

Construction Engineer:	Ben Ghafghazi	Date	6/4/09
Bridge Engineer:		Date	
Project Engineer:		Date	
Project Manager:		Date	
FHWA Rep.:		Date	
Environmental:		Date	
Other (specify):	Parviz Boozarpour, Elec. Design	Date	4/7/09
Other (specify):	Rene Forteleza, Elec. Maint.	Date	4/8/09
District Prior Approval By:		Date	
HQ (Issue Approve) By:		Date	
Resident Engineer's Signature		Date	6/4/09

ESTIMATE OF COST

	THIS REQUEST	TOTAL TO DATE
ITEMS	$0.00	$0.00
FORCE ACCOUNT	$60,000.00	$60,000.00
AGREED PRICE	$138,341.34	$138,341.34
ADJUSTMENT	$0.00	$0.00
TOTAL	$198,341.34	$198,341.34

FEDERAL PARTICIPATION

☐ PARTICIPATING ☐ PARTICIPATING IN PART ☑ NONE
☐ NON-PARTICIPATING (MAINTENANCE) ☐ NON-PARTICIPATING

FEDERAL SEGREGATION (if more than one Funding Source or P.I.P. type)
☑ CCO FUNDED PER CONTRACT ☐ CCO FUNDED AS FOLLOWS

FEDERAL FUNDING SOURCE	PERCENT

ADA Notice: For individuals with sensory disabilities, this document is available in alternate formats. For information call: (916) 654-6410 or TDD (916) 654-3880 or write Records and Forms Management, 1120 N Street, MS-89, Sacramento, CA 95814.

STATE OF CALIFORNIA - DEPARTMENT OF TRANSPORTATION

CONTRACT CHANGE ORDER MEMORANDUM

TO: AMER BATA / BEN GHAFGHAZI

FROM: BEN GHAFGHAZI

FILE: **E.A.** 04 - 0120L4
CO-RTE-PM ALA-80-1.6/2.7
FED. NO. NO FED AID

CCO#: **105** SUPPLEMENT#: **1** Category Code: **CBPC**

CONTINGENCY BALANCE (incl. this change) **$3,627,764.40**

COST: **$60,000.00** INCREASE ☑ DECREASE ☐

HEADQUARTERS APPROVAL REQUIRED? ☑ YES ☐ NO

SUPPLEMENTAL FUNDS PROVIDED: **$0.00**

IS THIS REQUEST IN ACCORDANCE WITH ENVIRONMENTAL DOCUMENTS? ☑ YES ☐ NO

CCO DESCRIPTION:
Additional funds to install 15kv cable.

PROJECT DESCRIPTION:
Construct bridge, roadway, building and electrical system.

Original Contract Time:	Time Adj. This Change:	Previously Approved CCO Time Adjustments:	Percentage Time Adjusted: (including this change)	Total # of Unreconciled Deferred Time CCO(s): (including this change)
810 Day(s)	**DEF** Day(s)	**184** Day(s)	**23** %	**13**

THIS CHANGE ORDER PROVIDES FOR:
Additional funds for providing and installing 15 KV cable, riser, splice UG and OH, and performing a short circuit study for the 15KV cable between the Oakland Substation and the existing Mole Substation with a high potential (Hipot) test per the details specified in CCO No. 105, Supplement No. 0.

This change is necessary because the costs associated with providing, installing, and Hipot testing the 15 KV cable was higher than originally anticipated. This work was performed by a subcontractor to the electrical contractor and an estimate was not available at the time CCO No. 105 was written.

This work will be paid as Extra Work at Force Account for $60,000.00, which can be financed from the contingency fund.

This change has been discussed and concurred with Mike Forner, SFOBB Construction Manager; Patrick Treacy, Headquarters Construction Coordinator; and Ken Terpstra, Project Manger. Design and Maintenance concurrence is not necessary since this CCO is only for additional funds only and does not add any new work. An Issue and Approve was granted by Headquarters on November 24, 2009.

Adjustment of contract time is deferred pending completion of the work specified in this change as it may affect the controlling operation. Determination of a commensurate time extension will be made in accordance with Section 10-1.14, "Progress Schedule (Critical Path Method)," of the Special Provisions and Section 8-1.07, "Liquidated Damages," of the Standard Specifications.

CONCURRED BY:

Construction Engineer:	Ben Ghafghazi	Date 11/24/09
Bridge Engineer:		Date
Project Engineer:		Date
Project Manager:	Ken Terprstra	Date 11/18/09
FHWA Rep.:		Date
Environmental:		Date
Other (specify):	Patrick Treacy, HQ Const. Coord.	Date 11/17/09
Other (specify):		Date
District Prior Approval By:	Mike Forner, Principal TE	Date 11/18/09
HQ (Issue Approve) By:	Bob Molera	Date 11/24/09
Resident Engineer's Signature:		Date 11/24/09

ESTIMATE OF COST

	THIS REQUEST	TOTAL TO DATE
ITEMS	$0.00	$0.00
FORCE ACCOUNT	$60,000.00	$120,000.00
AGREED PRICE	$0.00	$138,341.34
ADJUSTMENT	$0.00	$0.00
TOTAL	$60,000.00	$258,341.34

FEDERAL PARTICIPATION

☐ PARTICIPATING ☐ PARTICIPATING IN PART ☑ NONE
☐ NON-PARTICIPATING (MAINTENANCE) ☐ NON-PARTICIPATING

FEDERAL SEGREGATION (if more than one Funding Source or P.I.P. type)
☑ CCO FUNDED PER CONTRACT ☐ CCO FUNDED AS FOLLOWS

FEDERAL FUNDING SOURCE	PERCENT

ADA Notice: For individuals with sensory disabilities, this document is available in alternate formats. For information call: (916) 654-6410 or TDD (916) 654-3880 or write Records and Forms Management, 1120 N Street, MS-89, Sacramento, CA 95814.

CONTRACT CHANGE ORDER

Change Requested by: Engineer

CCO 105	Suppl. No. 1	Contract No. 04 - 0120L4	Road ALA-80-1.6/2.7	FED. AID LOC.: NO FED AID

To: **M C M CONSTRUCTION INC**

You are directed to make the following changes from the plans and specifications or do the following described work not included in the plans and specifications for this contract. ***NOTE: This change order is not effective until approved by the Engineer.***

Description of work to be done, estimate of quantities and prices to be paid. (Segregate between additional work at contract price, agreed price and force account.) Unless otherwise stated, rates for rental of equipment cover only such time as equipment is actually used and no allowance will be made for idle time. This last percentage shown is the net accumulated increase or decrease from the original quantity in the Engineer's Estimate.

Extra Work at Force Account:

Additional funds to provide and install 15 KV cable, riser, splice UG and OH, and perform a short circuit study for the 15KV cable between the Oakland Substation and the existing Mole Substation with a high potential (Hipot) test per the details specified in CCO No. 105, Supplement No. 0.

Estimated cost of Extra Work at Force Account $60,000.00

Consideration of a time adjustment will be deferred until completion of the work specified herein. Determination of a commensurate time extension will be made in accordance with Section 10-1.14, "Progress Schedule (Critical Path Method)," of the Special Provisions and Section 8-1.07, "Liquidated Damages," of the Standard Specifications.

Estimated Cost: Increase ☑ **Decrease** ☐ **$60,000.00**

By reason of this order the time of completion will be adjusted as follows: Deferred

Signature	**Resident Engineer** BEN GHAFGHAZI	**Date** 9/25/09
Signature	**Construction Manager** Amer Bata	**Date** 9/26/09
Signature	**Construction Manager** Amer Bata	**Date** 12/3/09

We the undersigned contractor, have given careful consideration to the change proposed and agree, if this proposal is approved, that we will provide all equipment, furnish the materials, except as may otherwise be noted above, and perform all services necessary for the work above specified, and will accept as full payment therefor the prices shown above.

NOTE: If you, the contractor, do not sign acceptance of this order, your attention is directed to the requirements of the specifications as to proceeding with the ordered work and filing a written protest within the time therein specified.

Signature N/A	**(Print name and title)**	**Date**

STATE OF CALIFORNIA - DEPARTMENT OF TRANSPORTATION

CONTRACT CHANGE ORDER MEMORANDUM

DATE: 5/3/2010

TO: AMER BATA / BEN GHAFGHAZI	FILE: E.A. 04 - 0120L4
	CO-RTE-PM ALA-80-1.6/2.7
FROM: BEN GHAFGHAZI	FED. NO. NO FED AID
CCO#: **105** SUPPLEMENT#: **2** Category Code: **AFZZ**	CONTINGENCY BALANCE (incl. this change) **$1,860,034.40**
COST: **$0.00** INCREASE ☐ DECREASE ☐	HEADQUARTERS APPROVAL REQUIRED? ☑ YES ☐ NO
SUPPLEMENTAL FUNDS PROVIDED: **$0.00**	IS THIS REQUEST IN ACCORDANCE WITH ENVIRONMENTAL DOCUMENTS? ☑ YES ☐ NO
CCO DESCRIPTION: Time Adjustment of 0 Days	**PROJECT DESCRIPTION:** Construct bridge, roadway, building and electrical system.

Original Contract Time:	Time Adj. This Change:	Previously Approved CCO Time Adjustments:	Percentage Time Adjusted: (including this change)	Total # of Unreconciled Deferred Time CCO(s): (including this change)
810 Day(s)	**0** Day(s)	**184** Day(s)	**23** %	**0**

THIS CHANGE ORDER PROVIDES FOR:

A time adjustment of 0 (zero) working days, in accordance with Section 8-1.07, "Liquidated Damages", of the Standard Specifications.

It has been determined that the work of Contract Change Order No. 105, Supplements #0 and #1, has had no impact on the contractor's controlling operation. Therefore, a time extension of 0 days is recommended.

Total Time Adjustment = 0 Days

CONCURRED BY:		
Construction Engineer: Ben Ghafghazi	Date 5/3/2010	
Bridge Engineer:	Date	
Project Engineer:	Date	
Project Manager:	Date	
FHWA Rep.:	Date	
Environmental:	Date	
Other (specify):	Date	
Other (specify):	Date	
District Prior Approval By:	Date	
HQ (Issue Approve) By: Larry Salbaney	Date 5/3/2010	
Resident Engineer's Signature:	Date 5/3/2010	

ESTIMATE OF COST

	THIS REQUEST	TOTAL TO DATE
ITEMS	$0.00	$0.00
FORCE ACCOUNT	$0.00	$120,000.00
AGREED PRICE	$0.00	$138,341.34
ADJUSTMENT	$0.00	$0.00
TOTAL	$0.00	$258,341.34

FEDERAL PARTICIPATION

☐ PARTICIPATING ☐ PARTICIPATING IN PART ☑ NONE
☐ NON-PARTICIPATING (MAINTENANCE) ☐ NON-PARTICIPATING

FEDERAL SEGREGATION (if more than one Funding Source or P.I.P. type)
☑ CCO FUNDED PER CONTRACT ☐ CCO FUNDED AS FOLLOWS

FEDERAL FUNDING SOURCE	PERCENT

ADA Notice: For individuals with sensory disabilities, this document is available in alternate formats. For information call: (916) 654-6410 or TDD (916) 654-3880 or write Records and Forms Management, 1120 N Street, MS-89, Sacramento, CA 95814.

STATE OF CALIFORNIA - DEPARTMENT OF TRANSPORTATION

CONTRACT CHANGE ORDER

Change Requested by: Engineer

CCO: 105	Suppl. No. 2	Contract No. 04 - 0120L4	Road ALA-80-1.6/2.7	FED. AID LOC.: NO FED AID

To: **M C M CONSTRUCTION INC**

You are directed to make the following changes from the plans and specifications or do the following described work not included in the plans and specifications for this contract. ***NOTE: This change order is not effective until approved by the Engineer.***

Description of work to be done, estimate of quantities and prices to be paid. (Segregate between additional work at contract price, agreed price and force account.) Unless otherwise stated, rates for rental of equipment cover only such time as equipment is actually used and no allowance will be made for idle time. This last percentage shown is the net accumulated increase or decrease from the original quantity in the Engineer's Estimate.

TIME ADJUSTMENT:

A determination of the delay in completion of the contract due to the work specified by Contract Change Order No. 105, Supplements #0 and #1, has been made in accordance with the provisions of Section 8-1.07 of the Standard Specifications.

Time Adjustment = 0 Days

Acceptance of this change order constitutes an agreement of full resolution of all time impact costs resulting from Change Order No. 105, Supplements #0 and #1.

This change order acts to resolve the deferred time issued on Change Order No. 105, Supplements #0 and #1, and no additional time shall be granted.

Estimated Cost: **Increase** ☐ **Decrease** ☐ **$0.00**

By reason of this order the time of completion will be adjusted as follows: 0 days

Signature	**Resident Engineer** Ben Ghafghazi	**Date** 5/3/2010
Signature	**Construction Manager** Amer Bata	**Date** 5/3/10
Signature	**Construction Manager** Amer Bata	**Date** 7/14/10

We the undersigned contractor, have given careful consideration to the change proposed and agree, if this proposal is approved, that we will provide all equipment, furnish the materials, except as may otherwise be noted above, and perform all services necessary for the work above specified, and will accept as full payment therefor the prices shown above.

NOTE: If you, the contractor, do not sign acceptance of this order, your attention is directed to the requirements of the specifications as to proceeding with the ordered work and filing a written protest within the time therein specified.

Signature	**(Print name and title)** JAMES A. CARTER, PRESIDENT	**Date** 7/14/10

STATE OF CALIFORNIA - DEPARTMENT OF TRANSPORTATION

CONTRACT CHANGE ORDER MEMORANDUM

DATE: 6/8/2010

TO: AMER BATA / BEN GHAFGHAZI

FROM: BEN GHAFGHAZI

FILE: **E.A.** 04 - 0120L4
CO-RTE-PM ALA-80-1.6/2.7
FED. NO. NO FED AID

CCO#: **105** SUPPLEMENT#: **3** Category Code: **CBPC**

CONTINGENCY BALANCE (incl. this change) **$1,435,547.90**

COST: **$25,000.00** INCREASE ☑ DECREASE ☐

HEADQUARTERS APPROVAL REQUIRED? ☑ YES ☐ NO

SUPPLEMENTAL FUNDS PROVIDED: **$0.00**

IS THIS REQUEST IN ACCORDANCE WITH ENVIRONMENTAL DOCUMENTS? ☑ YES ☐ NO

CCO DESCRIPTION:
Additional Funds

PROJECT DESCRIPTION:
Construct bridge, roadway, building and electrical system.

Original Contract Time:	Time Adj. This Change:	Previously Approved CCO Time Adjustments:	Percentage Time Adjusted: (including this change)	Total # of Unreconciled Deferred Time CCO(s): (including this change)
810 Day(s)	0 Day(s)	184 Day(s)	23 %	0

THIS CHANGE ORDER PROVIDES FOR:
Additional funds for providing and installing 15 kV cable, riser, splice UG and OH, and performing a short circuit study for the 15 kV cable between the Oakland Substation and the existing Mole Substation with a high potential (Hipot) test per the details specified in CCO No. 105, Supplement 0.

This change is necessary because the costs associated with providing, installing, and Hipot testing of the 15 kV cable was higher than originally anticipated. This work was performed by a subcontractor to the electrical contractor and an estimate was not available at the time CCO No. 105 was written. A supplement was subsequently written (CCO No. 105, Supplement 1) for $60,000, but it has now been determined that an additional $25,000.00 is needed to complete the work of this change order.

This work will be paid as Extra Work at Force Account for $25,000, which can be financed from the contingency fund.

Design and Maintenance concurrence is not necessary since this CCO is for additional funds only and does not add any new work. An Issue and Approve was granted by Headquarters on 6/15/10

No adjustment of contract time is warranted as this change does not affect the controlling operation.

CONCURRED BY:

Construction Engineer:	Ben Ghafghazi	Date 6/9/2010
Bridge Engineer:		Date
Project Engineer:		Date
Project Manager:		Date
FHWA Rep.:		Date
Environmental:		Date
Other (specify):		Date
Other (specify):		Date
District Prior Approval By:		Date
HQ (Issue Approve) By:	Larry Sullaney	Date 6/15/10
Resident Engineer's Signature:		Date 6/9/2010

ESTIMATE OF COST

	THIS REQUEST	TOTAL TO DATE
ITEMS	$0.00	$0.00
FORCE ACCOUNT	$25,000.00	$145,000.00
AGREED PRICE	$0.00	$138,341.34
ADJUSTMENT	$0.00	$0.00
TOTAL	$25,000.00	$283,341.34

FEDERAL PARTICIPATION

☐ PARTICIPATING ☐ PARTICIPATING IN PART ☑ NONE
☐ NON-PARTICIPATING (MAINTENANCE) ☐ NON-PARTICIPATING

FEDERAL SEGREGATION (if more than one Funding Source or P.I.P. type)
☑ CCO FUNDED PER CONTRACT ☐ CCO FUNDED AS FOLLOWS

FEDERAL FUNDING SOURCE	PERCENT

ADA Notice: For individuals with sensory disabilities, this document is available in alternate formats. For information call: (916) 654-6410 or TDD (916) 654-3880 or write Records and Forms Management, 1120 N Street, MS-89, Sacramento, CA 95814.

STATE OF CALIFORNIA - DEPARTMENT OF TRANSPORTATION

CONTRACT CHANGE ORDER

Change Requested by: Engineer

CCO: 105	Suppl. No. 3	Contract No. 04 - 0120L4	Road ALA-80-1.6/2.7	FED. AID LOC.: NO FED AID

To: **M C M CONSTRUCTION INC**

You are directed to make the following changes from the plans and specifications or do the following described work not included in the plans and specifications for this contract. ***NOTE: This change order is not effective until approved by the Engineer.***

Description of work to be done, estimate of quantities and prices to be paid. (Segregate between additional work at contract price, agreed price and force account.) Unless otherwise stated, rates for rental of equipment cover only such time as equipment is actually used and no allowance will be made for idle time. This last percentage shown is the net accumulated increase or decrease from the original quantity in the Engineer's Estimate.

Extra Work at Force Account:

Additional funds to provide and install 15 kV cable, riser, splice UG and OH, and perform a short circuit study for the 15 kV cable between the Oakland Substation and the existing Mole Substation with a high potential (Hipot) test per the details specified in CCO No. 105, Supplement 0.

Estimated cost of Extra Work at Force Account $25,000.00

Estimated Cost: Increase ☑ **Decrease** ☐ **$25,000.00**

By reason of this order the time of completion will be adjusted as follows: 0 days

Submitted by		
Signature	**Resident Engineer** Ben Ghafghazi	**Date** 6/9/2010
Approval Recommended		
Signature	**Construction Manager** Amer Bata	**Date** 6/9/10
Approval Authorized		
Signature	**Construction Manager** Amer Bata	**Date** 6/9/10

We the undersigned contractor, have given careful consideration to the change proposed and agree, if this proposal is approved, that we will provide all equipment, furnish the materials, except as may otherwise be noted above, and perform all services necessary for the work above specified, and will accept as full payment therefor the prices shown above.

NOTE: If you, the contractor, do not sign acceptance of this order, your attention is directed to the requirements of the specifications as to proceeding with the ordered work and filing a written protest within the time therein specified.

Contractor Acceptance		
Signature N/A	**(Print name and title)**	**Date**

STATE OF CALIFORNIA - DEPARTMENT OF TRANSPORTATION

CONTRACT CHANGE ORDER

Change Requested by: Engineer

CCO 106	Suppl. No. 0	Contract No. 04 - 0120L4	Road ALA-80-1.6/2.7	FED. AID LOC.: NO FED AID

To: **M C M CONSTRUCTION INC**

You are directed to make the following changes from the plans and specifications or do the following described work not included in the plans and specifications for this contract. ***NOTE: This change order is not effective until approved by the Engineer.***

Description of work to be done, estimate of quantities and prices to be paid. (Segregate between additional work at contract price, agreed price and force account.) Unless otherwise stated, rates for rental of equipment cover only such time as equipment is actually used and no allowance will be made for idle time. This last percentage shown is the net accumulated increase or decrease from the original quantity in the Engineer's Estimate.

Furnish and drive Class 400 piles for CMS B sign structure at Sta. EBDTR 87+80. Centerline of sign structure post is 3.35 M Rt. of EBDTR 87+80. Installation details are shown on sheets SD-2 and SD-3 of the contract plans.

Estimate of Increase in Contract Item at Contract Price:

Item No. 88: FURNISH PILING (CLASS 400)

78.18 M (+47.38%) $60.00 /M = +$4,690.80 (+47.38%)

No adjustment to the contract unit price of Item No. 88, "Furnish Piling (Class 400)," will be made in accordance with Section 4-1.03B(1), "Increases of More Than 25 Percent," of the Standard Specifications.

Total cost for Increase in Contract Item.....$4,690.80

Extra Work at Force Account:

Remove piles to 1 M below finish grade and backfill excavation for CMS sign structure footing at 3.35 M Lt. of EBDTR 87+80. All work shall be in accordance with Section 10-1.35, "Existing Highway Facilities," of the Special Provisions and Section 19-6, "Embankment Construction," of the Standard Specifications.

Estimated cost of Extra Work at Force Account $10,000.00

Extra Work at Lump Sum:

Provide labor, equipment, and materials necessary to drive 4 each Class 400 piles for CMS B sign structure. All work shall be in accordance with Section 10-1.50, "Piling," of the Special Provisions. For this work, the Contractor will be paid the sun of $20,000.00. This sum constitutes full compensation, including markups, for this change.

Estimated cost of Extra Work at Lump Sum $20,000.00

Estimated Cost: Increase ☑ Decrease ☐ $34,690.80

By reason of this order the time of completion will be adjusted as follows: 0 days

Submitted by

Signature	Resident Engineer BEN GHAFGHAZI	Date 5/7/09

Approval Recommended by

Signature	Construction Engineer Ben Ghafghazi	Date 5/7/09

Engineer Approval by

Signature	Construction Engineer Ben Ghafghazi	Date 6/4/09

We the undersigned contractor, have given careful consideration to the change proposed and agree, if this proposal is approved, that we will provide all equipment, furnish the materials, except as may otherwise be noted above, and perform all services necessary for the work above specified, and will accept as full payment therefor the prices shown above.

NOTE: If you, the contractor, do not sign acceptance of this order, your attention is directed to the requirements of the specifications as to proceeding with the ordered work and filing a written protest within the time therein specified.

Contractor Acceptance by

Signature	(Print name and title) EDMUNDO A. PUCHI, TREASURER	Date 6/1/09

STATE OF CALIFORNIA - DEPARTMENT OF TRANSPORTATION

CONTRACT CHANGE ORDER MEMORANDUM

DATE: 4/9/2009 Page 1 of 1

TO: AMER BATA / BEN GHAFGHAZI	FILE: E.A. 04 - 0120L4
FROM: BEN GHAFGHAZI	CO-RTE-PM ALA-80-1.6/2.7
	FED. NO. NO FED AID
CCO#: 106 SUPPLEMENT#: 0 Category Code: CKPP	CONTINGENCY BALANCE (incl. this change) $7,687,198.80
COST: $34,690.80 INCREASE ☑ DECREASE ☐	HEADQUARTERS APPROVAL REQUIRED? ☐ YES ☑ NO
SUPPLEMENTAL FUNDS PROVIDED: $0.00	IS THIS REQUEST IN ACCORDANCE WITH ENVIRONMENTAL DOCUMENTS? ☑ YES ☐ NO
CCO DESCRIPTION: Install Sign Foundation CMS B.	**PROJECT DESCRIPTION:** Construct bridge, roadway, building and electrical system.

Original Contract Time:	Time Adj. This Change:	Previously Approved CCO Time Adjustments:	Percentage Time Adjusted: (including this change)	Total # of Unreconciled Deferred Time CCO(s): (including this change)
810 Day(s)	0 Day(s)	184 Day(s)	23 %	12

THIS CHANGE ORDER PROVIDES FOR:

1) Furnishing and driving Class 400 piles for CMS B sign structure at Sta. EBDTR 87+80. Centerline of sign structure post is 3.35 M Rt. of EBDTR 87+80. Installation details are shown on sheets SD-2 and SD-3 of the contract plans. All work shall be in accordance with Section 10-1.50, "Piling," of the Special Provisions.

2) Removing piles to 1 M below finish grade and backfilling excavation for CMS sign structure footing at 3.35 M Lt. of EBDTR 87+80. All work shall be in accordance with Section 10-1.35, "Existing Highway Facilities," of the Special Provisions and Section 19-6, "Embankment Construction," of the Standard Specifications.

This change is necessary because the location of CMS B sign structure footing was staked by Caltrans staff 3.35 M Lt. of EBDTR 87+80 instead of 3.35 M Rt. as shown on the plans. The error was not discovered until excavation and pile installation for the footing was performed.

This CCO will be paid as increases in Item No. 88, "Furnish Piling (Class 400)," of 78.18 M for $4,690.80. Driving 4 each Class 400 piles will be paid as Extra Work at Agreed Lump Sum for $20,000.00. Removing piles to 1 M below finish grade and backfilling footing excavation will be paid as Extra Work at Force Account for $10,000.00. Total cost of this CCO is $34,690.80, which can be financed from the contingency fund.

No adjustment to the contract unit price of Item No. 88, "Furnish Piling (Class 400)," will be made in accordance with Section 4-1.03B(1), "Increases of More Than 25 Percent," of the Standard Specifications.

Design and Maintenance concurrence are not necessary because this work addresses a field issue.

No adjustment of contract time is warranted since this change does not affect the controlling operation.

CONCURRED BY:		
Construction Engineer:	Ben Ghafghazi	Date 5/7/09
Bridge Engineer:	Hazaa El-Mahmoud	Date 5/7/09
Project Engineer:		Date
Project Manager:		Date
FHWA Rep.:		Date
Environmental:		Date
Other (specify):		Date
Other (specify):		Date
District Prior Approval By:		Date
HQ (Issue Approve) By:		Date
Resident Engineer's Signature:		Date 5/7/09

ESTIMATE OF COST

	THIS REQUEST	TOTAL TO DATE
ITEMS	$4,690.80	$4,690.80
FORCE ACCOUNT	$10,000.00	$10,000.00
AGREED PRICE	$20,000.00	$20,000.00
ADJUSTMENT	$0.00	$0.00
TOTAL	$34,690.80	$34,690.80

FEDERAL PARTICIPATION

☐ PARTICIPATING ☐ PARTICIPATING IN PART ☑ NONE
☐ NON-PARTICIPATING (MAINTENANCE) ☐ NON-PARTICIPATING

FEDERAL SEGREGATION (if more than one Funding Source or P.I.P. type)
☑ CCO FUNDED PER CONTRACT ☐ CCO FUNDED AS FOLLOWS

FEDERAL FUNDING SOURCE	PERCENT

ADA Notice: For individuals with sensory disabilities, this document is available in alternate formats. For information call: (916) 654-6410 or TDD (916) 654-3880 or write Records and Forms Management, 1120 N Street, MS-89, Sacramento, CA 95814.

CONTRACT CHANGE ORDER

Change Requested by: Engineer

CCO 107	Suppl. No. 0	Contract No. 04 - 0120L4	Road ALA-80-1.6/2.7	FED. AID LOC.: NO FED AID

M C M CONSTRUCTION INC

You are directed to make the following changes from the plans and specifications or do the following described work not included in the plans and specifications for this contract. ***NOTE: This change order is not effective until approved by the Engineer.***

Description of work to be done, estimate of quantities and prices to be paid. (Segregate between additional work at contract price, agreed price and force account.) Unless otherwise stated, rates for rental of equipment cover only such time as equipment is actually used and no allowance will be made for idle time. This last percentage shown is the net accumulated increase or decrease from the original quantity in the Engineer's Estimate.

Extra Work at Force Account:

At Mole Substation make revisions related to battery room cooling ventilation fan, EF-1, and hydrogen ventilation fan, EF-2. Changes are shown on sheets 2 of 5 through 5 of 5 of this CCO. All work shall be in accordance with Sections 10-3, "Signals, Lighting and Electrical Systems," and 12, "Building Work (Mole Substation Architectural)," of the Special Provisions.

Estimated cost of Extra Work at Force Account $15,000.00

Estimated Cost: **Increase** ☑ **Decrease** ☐ **$15,000.00**

By reason of this order the time of completion will be adjusted as follows: 0 days

Submitted by

Signature	Resident Engineer BEN GHAFGHAZI	Date 4/22/09

Approval Recommended by

Signature	Construction Engineer Ben Ghafghazi	Date 4/22/09

Engineer Approval by

Signature	Construction Engineer Ben Ghafghazi	Date 6/3/09

We the undersigned contractor, have given careful consideration to the change proposed and agree, if this proposal is approved, that we will provide all equipment, furnish the materials, except as may otherwise be noted above, and perform all services necessary for the work above specified, and will accept as full payment therefor the prices shown above.

NOTE: If you, the contractor, do not sign acceptance of this order, your attention is directed to the requirements of the specifications as to proceeding with the ordered work and filing a written protest within the time therein specified.

Contractor Acceptance by

Signature	(Print name and title) EDMUNDO A. PUCHI, TREASURER	Date 5/28/09

MARK	DATE	DESCRIPTIONS	REV	CK	CCO NO.
2	2/27/09	Added EF-2 input to RTU #16.	DO	EJL	Battery Room
1	8/29/08	Added CKT #A-2007, A-2008, #A-1006, #A-1007, #A-1008	MP	EJL	Light Pipe

REVISIONS

CONTRACT CHANGE ORDER NO. 107
SHEET 2 OF 5 4/21/09

REGISTERED PROFESSIONAL ENGINEER FADI WALIEDDINE No. 11465 Exp. 12/31/2009 ELECTRICAL STATE OF CALIFORNIA

3. References:
- For UP-004 panel schedule, see Sheet E-148.
- For relay configuration, see Sheet E-155.
- For 480 V LVCC elevation and schedules, see sheets E-131 and E-132.
- For conduit/cable tray schedules, see sheets starting at E-224.

Caltrans Metric

DIST	COUNTY	ROUTE	KILOMETER POST TOTAL PROJECT	SHEET No	TOTAL SHEETS
04	Ala	80	1.6/2.7	527 R2	643

REGISTERED ELECTRICAL ENGINEER 05/15/06 DATE

1-29-07
PLANS APPROVAL DATE

REGISTERED PROFESSIONAL ENGINEER JENS ERLINGSSON No. 8249 Exp. 9/30/08 ELECTRICAL STATE OF CALIFORNIA

PB POWER, Inc.
A Parsons Brinckerhoff Company
303 Second St., Suite 700N
San Francisco, CA 94107-1317

The State of California or its officers or agents shall not be responsible for the accuracy or completeness of electronic copies of this plan sheet.

To get to the Caltrans web site, go to: http://www.dot.ca.gov

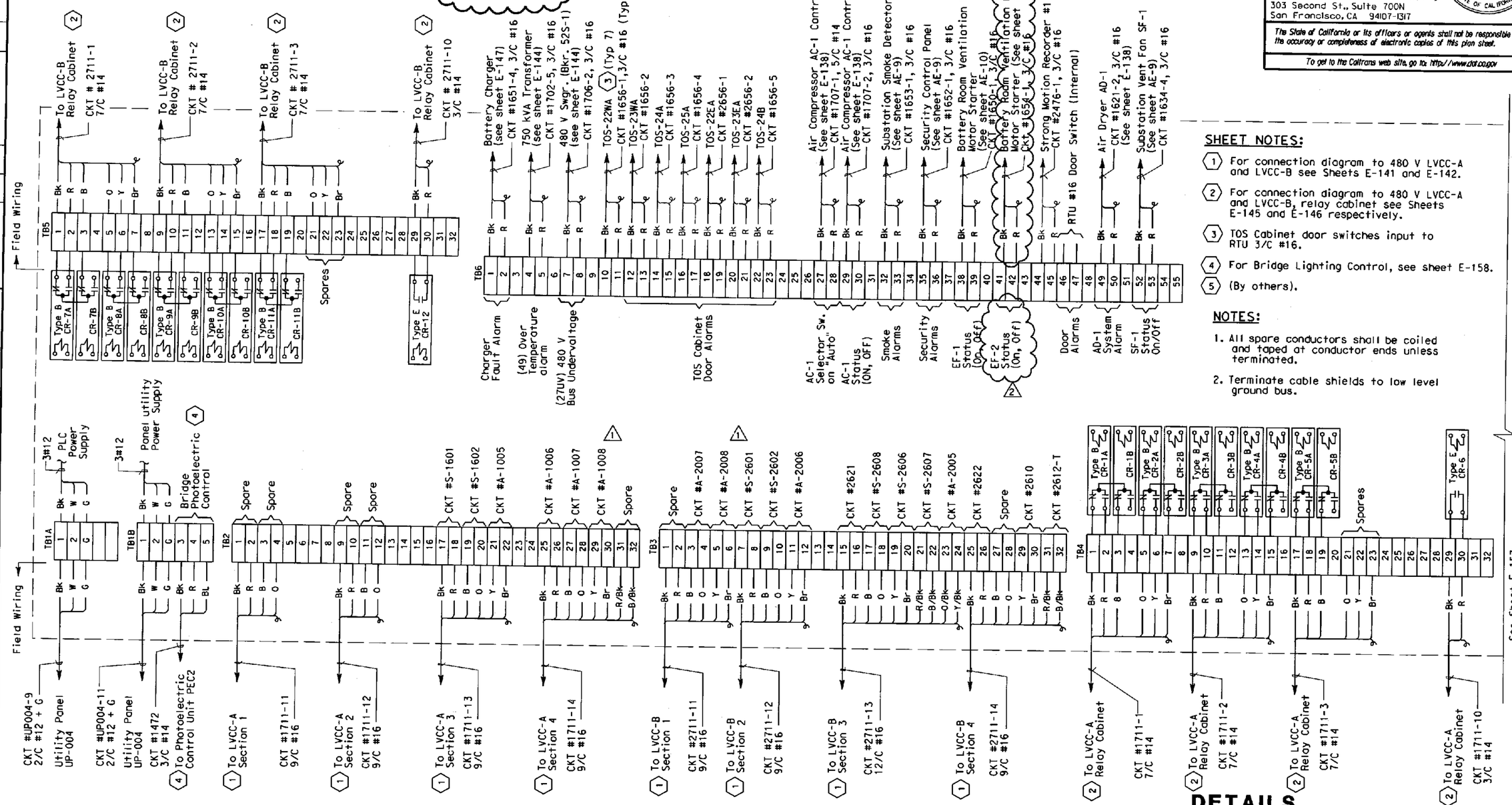

SHEET NOTES:

1. For connection diagram to 480 V LVCC-A and LVCC-B see Sheets E-141 and E-142.
2. For connection diagram to 480 V LVCC-A and LVCC-B, relay cabinet see Sheets E-145 and E-146 respectively.
3. TOS Cabinet door switches input to RTU 3/C #16.
4. For Bridge Lighting Control, see sheet E-158.
5. (By others).

NOTES:

1. All spare conductors shall be coiled and taped at conductor ends unless terminated.
2. Terminate cable shields to low level ground bus.

DETAILS
SCADA REMOTE TERMINAL UNIT SYSTEM
RTU #16 ELEMENTARY AND CONNECTION DIAGRAM
NO SCALE

E-156

CALCULATED/ DESIGNED BY	FK	DATE 2/06	REVISED BY	DATE REVISED
CHECKED BY	AB	2/06		

DESIGN OVERSIGHT
BEHZAD GOLEMOHAMMADI

STATE OF CALIFORNIA - DEPARTMENT OF TRANSPORTATION
Caltrans

FOR REDUCED PLANS ORIGINAL SCALE IS IN MILLIMETERS 0 20 40 60 80

DGN FILE =>T:\13103\MS\pse\OTD-Contract 1\CCO\Electrical\CCO-battery room\401201ua156r2.dgn
USERNAME =>ricafrente

CU 04251 EA 0120L1

PLOTTED => 3/2/2009
PLOTTED => 11:53:58 AM

LAST REVISION 00-00-00

DIST	COUNTY	ROUTE	KILOMETER POST TOTAL PROJECT	SHEET NO	TOTAL SHEETS
04	Ala	80	1.6/2.7	635R1	643

REGISTERED ELECTRICAL ENGINEER 05/15/06

1-29-07
PLANS APPROVAL DATE

REGISTERED PROFESSIONAL ENGINEER JENS ERLINGSSON No. 8249 Exp. 9/30/08 ELECTRICAL STATE OF CALIFORNIA

PB POWER, Inc.
A Parsons Brinckerhoff Company
303 Second St., Suite 700N
San Francisco, CA 94107-1317

The State of California or its officers or agents shall not be responsible for the accuracy or completeness of electronic copies of this plan sheet.

To get to the Caltrans web site, go to: http://www.dot.ca.gov

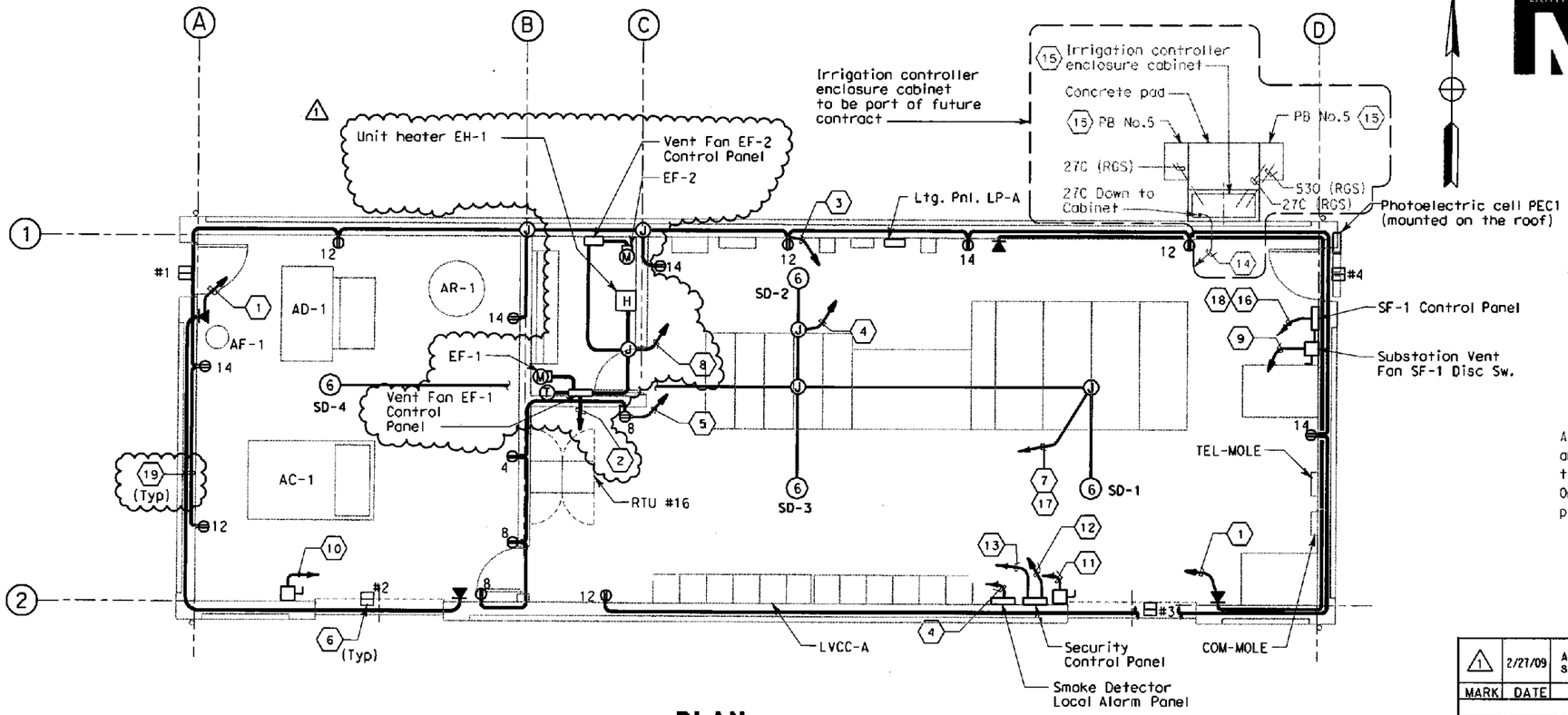

PLAN
SCALE: 1:50

CALIFORNIA STATE FIRE MARSHAL
APPROVED

Approval of this plan does not authorize or approve any omission or deviation from applicable regulations. Final approval is subject to field inspection. One set of approved plans shall be available on the project site at all times.

Reviewed by: 7-25-06

MARK	DATE	DESCRIPTIONS	REV	CK	CCO NO.
1	2/27/09	Added EF-1. Revised EF-2, conduits, sheet notes 2, 7, 8, 11, 18 and Note 2	DO	EJL	Battery Room

REVISIONS

CONTRACT CHANGE ORDER NO. 107
SHEET 3 OF 5 4/21/09

REGISTERED PROFESSIONAL ENGINEER FADI WALIEDDINE No. 11465 Exp. 12/31/2009 ELECTRICAL STATE OF CALIFORNIA

NOTES:

1. For other related work not shown on this sheet, see Mole Substation Electrical Plans.
2. Conduit shall be Electrical Metallic Tubing (EMT) 21 mm minimum, unless otherwise indicated. minimum cable size shall be #12.
3. References:
   - For lighting panel LP-A panel schedule, see sheet AE-7.
   - For LVCC-A single line diagram, see sheet E-130.
   - For Mole substation electrical conduit and cable tray plan, see sheet E-124.
   - For remote terminal unit RTU #16 elementary and connection diagrams, see sheets E-156 thru E-158.
   - For circuit and conduit/cable tray schedule see sheets starting at E-224.
   - For Mechanical Equipment Schedule, see Mechanical drawings.

SHEET NOTES:

(1) Homerun to telephone backboard TEL-MOLE. Contractor shall install 21C with pull wire from the telephone backboard to the telephone outlets.

(2) Homerun to remote terminal unit RTU #16, 27C circuits # 1650-1 (EF-1), and 1654-1 (EF-2), 3/C #16. See sheet AE-10. 1

(3) Homerun to lighting panel LP-A, 21C-circuits #12 and #14, 3#12 + #12G.

(4) Homerun to lighting panel LP-A, 21C-circuit #6, 2#12 + #12G.

(5) Homerun to lighting panel LP-A, 21C-circuits #4 and #8, 3#12 + #12G.

(6) All magnetic contact door switches shall be connected to the security control panel per the manufacturer's instructions.

(7) Homerun to remote terminal unit RTU #16 for smoke detector alarm, 21C-circuit #1653-1, see sheet AE-10, 3/C #16

(8) Homerun to lighting panel LP-A, 27C-circuits #1633, #1650 and #1654. See sheet AE-10. 1

(9) Homerun to LVCC-A 21C-circuit #1634.

SHEET NOTES:

(10) Homerun to LVCC-A from mechanical 21C-circuit #1637. Connections to and from roll up door control panel is not shown. See sheet AE-9. 1

(11) Homerun to LVCC-A, 21C-circuit #1635. See sheet AE-9.

(12) Homerun to lighting panel LP-A, 21C-circuit #18, 2#12 + #12G.

(13) Homerun to remote terminal unit RTU #16, 21C-circuit #1652-1, 3/C #16. See sheet AE-9.

(14) Homerun to lighting panel LP-A, 21C-circuit #28, 2#12 + 12G. Not in Contract.

(15) For details of irrigation controller enclosure cabinet and PB No.5, see Caltrans Standard Plans ES-3H and ES-8, respectively. Not in Contract.

(16) Homerun to remote terminal unit RTU #16, 21C-circuit #1634-4, 3/C #16. See sheet AE-9. 1

(17) Homerun to smoke detector local alarm panel, 21C-circuit #1653-2, 2/C #14, See sheet AE-10.

(18) Homerun to TSH, 21C- 2#14. TSH location by Contractor. Circuit #1634-3 for Ventilation Fan SF-1. See Sheet AE-9. 1

(19) Conduits shall be routed exposed, surface mounted on the walls. 1

ALL DIMENSIONS ARE IN MILLIMETERS UNLESS OTHERWISE SHOWN

Behzad Golemohammadi, DESIGN OVERSIGHT	DESIGN: A. Borgia	CHECKED: F. Kwok	PREPARED FOR THE STATE OF CALIFORNIA DEPARTMENT OF TRANSPORTATION
SIGN OFF DATE	DETAILS: L. Reyes	CHECKED: A. Borgia	Jens Erlingsson, PROJECT ENGINEER
	QUANTITIES: P. McNamee	CHECKED: A. Borgia	

BRIDGE NO. 34-0006
KILOMETER POST

MOLE SUBSTATION ARCHITECTURAL POWER PLAN

AE-2

SHEET OF

DESIGN DETAIL SHEET (METRIC) (REV. 3/1/98)

ORIGINAL SCALE IN MILLIMETERS FOR REDUCED PLANS 0 10 20 30 40 50 60 70 80 90 100

CU 04251
EA 0120L1

DISREGARD PRINTS BEARING EARLIER REVISION DATES

REVISION DATES (PRELIMINARY STAGE ONLY)

FILE => T:\13103\MS\pse\OTD-Contract 1\CCO\Electrical\CCO-battery room\401201af002.dgn

USERNAME => PLOTTED => 3/2/2009 TIME PLOTTED => 11:57:45 AM

DIST	COUNTY	ROUTE	KILOMETER POST TOTAL PROJECT	SHEET NO	TOTAL SHEETS
04	Ala	80	1.6/2.7	640R1	643

REGISTERED ELECTRICAL ENGINEER 05/15/06

1-29-07
PLANS APPROVAL DATE

REGISTERED PROFESSIONAL ENGINEER JENS ERLINGSSON No. 8249 Exp. 9/30/08 ELECTRICAL STATE OF CALIFORNIA

PB POWER, Inc.
A Parsons Brinckerhoff Company
303 Second St., Suite 700N
San Francisco, CA 94107-1317

The State of California or its officers or agents shall not be responsible for the accuracy or completeness of electronic copies of this plan sheet.

To get to the Caltrans web site, go to: http://www.dot.ca.gov

LIGHTING PANEL LP-A (CKT #1631) Location: Mole Substation

LOAD DESCRIPTION	LTG	REC	OTH.	BKR		BKR	LTG	REC	OTH.	LOAD DESCRIPTION
Spare				20/1	1 A 2	20/1				Spare
(1) Battery Room Hydrogen Ventilation EF-2 Circuit No. 1654		(1)	22	20/1	3 B 4	20/1		180		Recept-(1) Elect. Equip. and Air Compressor Room
Lighting-Battery Room	78			20/1	5 C 6	20/1			1000	Substation Smoke Detectors (4) and Local Alarm Panel
Lighting-Air Compressor Room	583			20/1	7 A 8	20/1		540		Recept.(3) Elect. Equip. and Air Compressor Room
Lighting-Electrical Room	700			20/1	9 B 10	20/1				Spare
Lighting-Electrical Room	700			20/1	11 C 12	20/1		900		Recept-(5) Electrical Equip. Room and Air Compressor Room
Spare				20/1	13 A 14	20/1		900		Recept-(5) Electrical Equip. Room and Air Compressor Room
Spare				20/1	15 B 16	20/1		(1)	53	Battery Room Cooling Ventilation Fan EF-1 Circuit 1650.
(1) Outdoor Lighting and Control	1150			20/1	17 C 18	20/1		200		Security Control Panel
Battery Room Unit Heater EH-1 Circuit No. 1633.		(1)	1666	20/2	19 A 20	20/1				Spare
			1666		21 B 22	20/1	187			Emergency Lighting
Spare				20/1	23 C 24	20/1				Spare
Spare				20/1	25 A 26	20/1				Spare
Spare				20/2	27 B 28	20/1			200	Irrigation Controller Cabinet
					29 C 30	20/2				Spare
TOTAL VA	3211		(1) 3354				187	2720	(1) 1253	TOTAL VA

LOAD SUMARY IN VA

LIGHTING: (at 100%) : 3.398 kVA
GEN USE: (1st 10 kVA at 100% + 50% OF REMAINDER) = (1) 7.327

TOTAL kVA: (1) 10.725
TOTAL A: (1) 29.80 A at 208 V, 3Ø

BALANCE (kVA)

PHASE A: (1) 3.689
PHASE B: (1) 3.008
PHASE C 4.028

VOLTAGE: (1) 208/120 V
PHASE/WIRES: 3-phase, 4-wire
BUS RATING: 100 A
MAINS: 100 A
MOUNTING: SURFACE
k.A.I.C. = 10

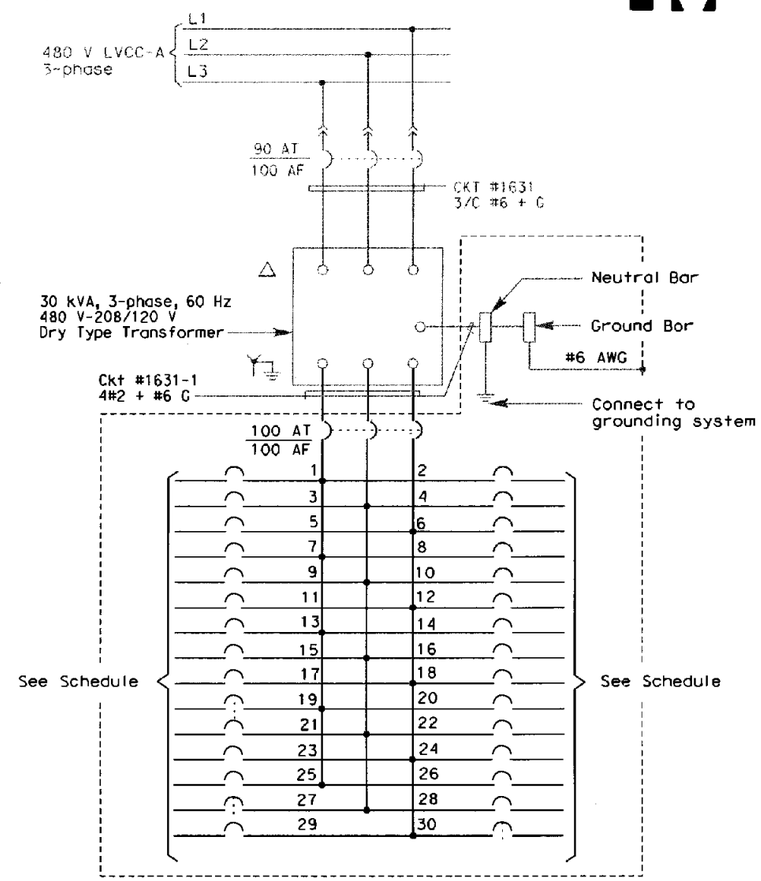

LIGHTING PANEL - LP-A

SHEET NOTE:

(1) Circuits controlled by lighting contactor; revised loads based on actual data; describe heater with internal thermostat.

NOTES:

1. Contractor to provide nameplates and circuit schedule as shown.
2. Reference:
   - For LVCC-A single line diagram, see sheet E-130.
   - For circuit and conduit/cable tray schedules, see sheets starting at E-224.
   - For outdoor lighting control diagram, see sheet AE-9.

CALIFORNIA STATE FIRE MARSHAL
APPROVED

Approval of this plan does not authorize or approve any omission or deviation from applicable regulations. Final approval is subject to field inspection. One set of approved plans shall be available on the project site at all times.

Reviewed by: 7-25-06

REGISTERED PROFESSIONAL ENGINEER FADI WALIEDDINE No. 11465 Exp. 12/31/2009 ELECTRICAL STATE OF CALIFORNIA

MARK	DATE	DESCRIPTIONS	REV	CK	CCO NO.
1	2/27/09	Added EF-2. Revised load.	DO	EJL	Battery Room

REVISIONS

CONTRACT CHANGE ORDER NO. 107
SHEET 4 OF 5 4/21/09

ALL DIMENSIONS ARE IN MILLIMETERS UNLESS OTHERWISE SHOWN

Behzad Golemohammadi
DESIGN OVERSIGHT
SIGN OFF DATE

DESIGN	BY A. Borgia	CHECKED F. Knok
DETAILS	BY L. Reyes	CHECKED A. Borgia
QUANTITIES	BY P. McNamee	CHECKED A. Borgia

PREPARED FOR THE STATE OF CALIFORNIA DEPARTMENT OF TRANSPORTATION

Jens Erlingsson
PROJECT ENGINEER

BRIDGE NO. 34-0006
KILOMETER POST

MOLE SUBSTATION ARCHITECTURAL
PANEL SCHEDULE
AE-7

DESIGN DETAIL SHEET (METRIC) (REV. 3/1/98)

ORIGINAL SCALE IN MILLIMETERS FOR REDUCED PLANS 0 10 20 30 40 50 60 70 80 90 100

CU 04251
EA 0120L1

DISREGARD PRINTS BEARING EARLIER REVISION DATES

REVISION DATES (PRELIMINARY STAGE ONLY) SHEET OF

FILE => T:\13103\MS\pse\OTD-Contract 1\CCO\Electrical\CCO-battery room\401201af007.dgn

USERNAME => rf DATE PLOTTED => 3/2/2009 TIME PLOTTED => 11:59:51 AM

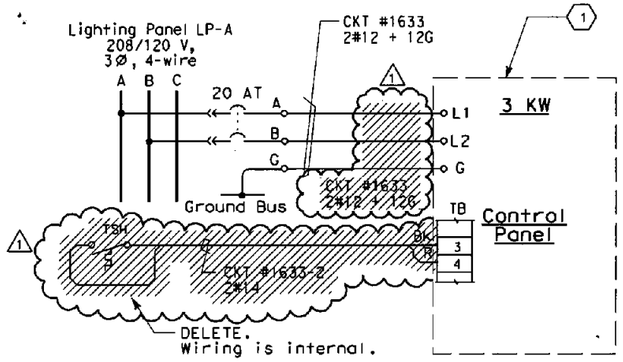

BATTERY ROOM UNIT HEATER EH-1

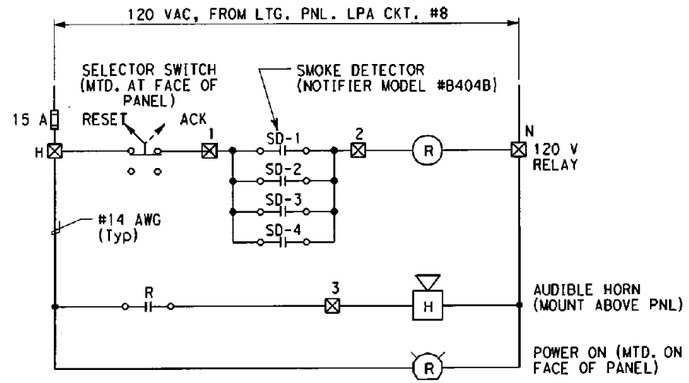

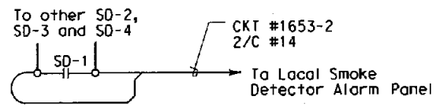

LOCAL ALARM PANEL

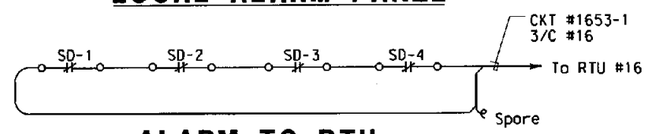

ALARM TO RTU

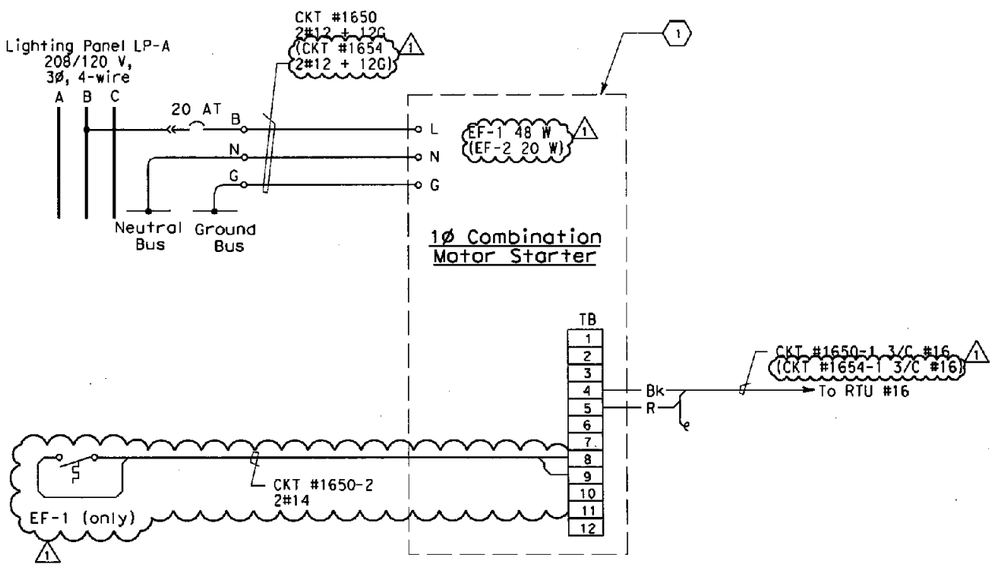

~~BATTERY ROOM COOLING VENTILATION FAN EF-1~~
(BATTERY ROOM HYDROGEN VENTILATION FAN EF-2)

SUBSTATION SMOKE DETECTORS

RELAY PANEL LIST OF MATERIALS

ITEM NO.	DESCRIPTION	QUANTITY
1	Enclosure, NEMA 1 Enclosure 8"x8"x4" with Interior Panel Hoffman Cat. #A-8N86 #A-8N8P Name Plate "Smoke Detector Alarm Panel"	1
2	Relay, Industrial control, 120 VAC, 4 Pole, 2 NO, 2 NC, 10 A Contacts Cutler Hammer #D12CRC22A	1
3	Selector Switch, 2 Position Maintained Contacts. Cutler Hammer #10250ED1117-KR Mounted on Face of Panel. Name Plate "Reset/Ack"	1
4	Terminal Blocks Rated 300 V, 20 A Minimum, Barrier, Type with Screw Terminals	as required
5	Fuse Block, Single Pole, Rated at 30 A with 15 AMP Fuse	1
6	Indicating Light, 120 VAC, Red Lens. Cutler Hammer #E22H2X11 Name Plate "Power On"	1
7	Audible Horn, 120 VAC, Wall Mount 100 dB at 10 Ft. Federal Signal Corporation Model 350 Vibratone Horn (Mount Above Alarm Panel)	1

DIST	COUNTY	ROUTE	KILOMETER POST TOTAL PROJECT	SHEET No	TOTAL SHEETS
04	Ala	80	1.6/2.7	643R1	643

05/15/06
REGISTERED ELECTRICAL ENGINEER

1-29-07
PLANS APPROVAL DATE

REGISTERED PROFESSIONAL ENGINEER JENS ERLINGSSON No. 8249 Exp. 9/30/08 ELECTRICAL STATE OF CALIFORNIA

PB POWER, Inc.
A Parsons Brinckerhoff Company
303 Second St., Suite 700N
San Francisco, CA 94107-1317

The State of California or its officers or agents shall not be responsible for the accuracy or completeness of electronic copies of this plan sheet.

To get to the Caltrans web site, go to: http://www.dot.ca.gov

SHEET NOTES:

1. Supplied by HVAC manufacturer. Fan Control Center shall use ON/OFF switch and have auxilliary contacts to report motor-ON voltage to RTU.

NOTE:

1. References:
   - For RTU terminations, see sheet E-156.
   - For mechanical equipment list and specifications, see AM drawings.
   - For lighting panel LP-A panel schedule, see sheet AE-7.

MARK	DATE	DESCRIPTIONS	REV	CK	CCO NO.
1	2/27/09	Added EF-2 ckts. #1650-2, 1654 and 1654-1. Revised EF-1. Deleted TSH and disconnect switch, ckts. #1633-1 and 1633-2.	ECR 1	EJL	Battery Room

REVISIONS

CONTRACT CHANGE ORDER NO. 107
SHEET 5 OF 5 4/21/09

REGISTERED PROFESSIONAL ENGINEER FADI WALIEDDINE No. 11465 Exp. 12/31/2009 ELECTRICAL STATE OF CALIFORNIA

CALIFORNIA STATE FIRE MARSHAL
APPROVED

Approval of this plan does not authorize or approve any omission or deviation from applicable regulations. Final approval is subject to field inspection. One set of approved plans shall be available on the project site at all times.

Reviewed by: 7-25-06

ALL DIMENSIONS ARE IN MILLIMETERS UNLESS OTHERWISE SHOWN

Behzad Golemohammadi
DESIGN OVERSIGHT
SIGN OFF DATE

	BY	CHECKED
DESIGN	A. Borgia	F. Kwok
DETAILS	L. Reyes	A. Bargia
QUANTITIES	P. McNamee	A. Bargia

PREPARED FOR THE STATE OF CALIFORNIA DEPARTMENT OF TRANSPORTATION

Jens Erlingsson
PROJECT ENGINEER

BRIDGE NO. 34-0006
KILOMETER POST

MOLE SUBSTATION ARCHITECTURAL
ELEMENTARY DIAGRAMS
AE-10

DESIGN DETAIL SHEET (METRIC) (REV. 3/1/98)

ORIGINAL SCALE IN MILLIMETERS FOR REDUCED PLANS 0 10 20 30 40 50 60 70 80 90 100

CU 04251
EA 0120L1

DISREGARD PRINTS BEARING EARLIER REVISION DATES

REVISION DATES (PRELIMINARY STAGE ONLY) SHEET OF

FILE => T:\13H03\MS\pse\OTD-Contract 1\CCO\Electrical\CCO-battery room\401201af010.dgn

USERNAME => T@ATE PLOTTED => 3/2/2009 TIME PLOTTED => 1:04:03 PM

STATE OF CALIFORNIA - DEPARTMENT OF TRANSPORTATION

CONTRACT CHANGE ORDER MEMORANDUM

DATE: 4/21/2009 Page 1 of 1

TO: AMER BATA / BEN GHAFGHAZI	FILE: E.A. 04 - 0120L4
FROM: BEN GHAFGHAZI	CO-RTE-PM ALA-80-1.6/2.7
	FED. NO. NO FED AID
CCO#: 107 SUPPLEMENT#: 0 Category Code: CBPX	CONTINGENCY BALANCE (incl. this change) $7,791,454.80
COST: $15,000.00 INCREASE ☑ DECREASE ☐	HEADQUARTERS APPROVAL REQUIRED? ☐ YES ☑ NO
SUPPLEMENTAL FUNDS PROVIDED: $0.00	IS THIS REQUEST IN ACCORDANCE WITH ENVIRONMENTAL DOCUMENTS? ☑ YES ☐ NO
CCO DESCRIPTION: Battery room fan revisions.	**PROJECT DESCRIPTION:** Construct bridge, roadway, building and electrical system.

Original Contract Time:	Time Adj. This Change:	Previously Approved CCO Time Adjustments:	Percentage Time Adjusted: (including this change)	Total # of Unreconciled Deferred Time CCO(s): (including this change)
810 Day(s)	0 Day(s)	184 Day(s)	23 %	12

THIS CHANGE ORDER PROVIDES FOR:

At Mole Substation, revising details related to battery room cooling ventilation fan, EF-1, and hydrogen ventilation fan, EF-2. Changes are shown on sheets 2 of 5 through 5 of 5 of the CCO. All work will be in accordance with Sections 10-3, "Signals, Lighting and Electrical Systems," and 12, "Building Work (Mole Substation Architectural)," of the Special Provisions.

This change is necessary to correct items that were missing or shown incorrectly on the original plans and are required for the proper installation and operation of the fans.

This work will be paid as Extra Work at Force Account for $15,000.00, which can be financed from the contingency fund.

This change was requested by Jaime Gutierrez of Project Development (memo attached), and has been discussed and concurred with Parviz Boozarpour of Electrical Design, Ellery Lucas of Parsons Brinkerhoff, and Rene Forteleza of Electrical Maintenance.

No adjustment of contract time is warranted since this change does not affect the controlling operation.

CONCURRED BY:

Construction Engineer:	Ben Ghafghazi	Date 4/22/09
Bridge Engineer:		Date
Project Engineer:	Jaime Gutierrez	Date 3/12/09
Project Manager:		Date
FHWA Rep.:		Date
Environmental:		Date
Other (specify):	Parviz Boozarpour, Elec. Design	Date 3/2/09
Other (specify):	Rene Forteleza, Elec. Maintenance	Date 4/21/09
District Prior Approval By:		Date
HQ (Issue Approve) By:		Date
Resident Engineer's Signature:		Date 4/22/09

ESTIMATE OF COST

	THIS REQUEST	TOTAL TO DATE
ITEMS	$0.00	$0.00
FORCE ACCOUNT	$15,000.00	$15,000.00
AGREED PRICE	$0.00	$0.00
ADJUSTMENT	$0.00	$0.00
TOTAL	$15,000.00	$15,000.00

FEDERAL PARTICIPATION

☐ PARTICIPATING ☐ PARTICIPATING IN PART ☑ NONE
☐ NON-PARTICIPATING (MAINTENANCE) ☐ NON-PARTICIPATING

FEDERAL SEGREGATION (if more than one Funding Source or P.I.P. type)

☑ CCO FUNDED PER CONTRACT ☐ CCO FUNDED AS FOLLOWS

FEDERAL FUNDING SOURCE	PERCENT

ADA Notice: For individuals with sensory disabilities, this document is available in alternate formats. For information call: (916) 654-6410 or TDD (916) 654-3880 or write Records and Forms Management, 1120 N Street, MS-89, Sacramento, CA 95814.

STATE OF CALIFORNIA - DEPARTMENT OF TRANSPORTATION

CONTRACT CHANGE ORDER MEMORANDUM

TO: AMER BATA / BEN GHAFGHAZI	FILE: E.A. 04 - 0120L4
FROM: BEN GHAFGHAZI	CO-RTE-PM ALA-80-1.6/2.7
	FED. NO. NO FED AID
CCO#: 107 SUPPLEMENT#: 1 Category Code: CBPX	CONTINGENCY BALANCE (incl. this change): $979,598.90
COST: $25,000.00 INCREASE ☑ DECREASE ☐	HEADQUARTERS APPROVAL REQUIRED? ☐ YES ☑ NO
SUPPLEMENTAL FUNDS PROVIDED: $0.00	IS THIS REQUEST IN ACCORDANCE WITH ENVIRONMENTAL DOCUMENTS? ☑ YES ☐ NO
CCO DESCRIPTION: Additional Funds for CCO 107	**PROJECT DESCRIPTION:** Construct bridge, roadway, building and electrical system.

Original Contract Time:	Time Adj. This Change:	Previously Approved CCO Time Adjustments:	Percentage Time Adjusted: (including this change)	Total # of Unreconciled Deferred Time CCO(s): (including this change)
810 Day(s)	0 Day(s)	0 Day(s)	0 %	0

THIS CHANGE ORDER PROVIDES FOR:

Additional funding for modifications to the Mole Substation ventilation fans.

The original Change Order No. 107 provided for modifications to the battery room cooling ventilation fan and the hydrogen ventilation fan for the Mole Substation. The scope of the work has now exceeded the previous estimates and it is now anticipated that additional funding of $25,000.00 will be required to fund the work performed.

The work shall be compensated as extra work at force account at an estimated cost of $25,000.00 which shall be financed from the contract contingency funds. A cost analysis is on file.

No adjustment of contract time is warranted as the change will not affect the controlling operation.

Maintenance concurrence is not required as this change is an administrative change order to provide additional funding for previously approved work.

CONCURRED BY:		
Construction Engineer: Ben Ghafghazi	Date 12/28/2010	
Bridge Engineer:	Date	
Project Engineer:	Date	
Project Manager:	Date	
FHWA Rep.:	Date	
Environmental:	Date	
Other (specify):	Date	
Other (specify):	Date	
District Prior Approval By:	Date	
HQ (Issue Approve) By:	Date	
Resident Engineer's Signature:	Date 12/28/2010	

ESTIMATE OF COST

	THIS REQUEST	TOTAL TO DATE
ITEMS	$0.00	$0.00
FORCE ACCOUNT	$25,000.00	$40,000.00
AGREED PRICE	$0.00	$0.00
ADJUSTMENT	$0.00	$0.00
TOTAL	$25,000.00	$40,000.00

FEDERAL PARTICIPATION

☐ PARTICIPATING ☐ PARTICIPATING IN PART ☑ NONE
☐ NON-PARTICIPATING (MAINTENANCE) ☐ NON-PARTICIPATING

FEDERAL SEGREGATION (if more than one Funding Source or P.I.P. type)
☐ CCO FUNDED PER CONTRACT ☐ CCO FUNDED AS FOLLOWS

FEDERAL FUNDING SOURCE	PERCENT

ADA Notice: For individuals with sensory disabilities, this document is available in alternate formats. For information call: (916) 654-6410 or TDD (916) 654-3880 or write Records and Forms Management, 1120 N Street, MS-69, Sacramento, CA 95814.

STATE OF CALIFORNIA - DEPARTMENT OF TRANSPORTATION

CONTRACT CHANGE ORDER

Change Requested by: Engineer

CCO: 107	Suppl. No. 1	Contract No. 04 - 0120L4	Road ALA-80-1.6/2.7	FED. AID LOC.: NO FED AID

To: **M C M CONSTRUCTION INC**

You are directed to make the following changes from the plans and specifications or do the following described work not included in the plans and specifications for this contract. ***NOTE: This change order is not effective until approved by the Engineer.***

Description of work to be done, estimate of quantities and prices to be paid. (Segregate between additional work at contract price, agreed price and force account.) Unless otherwise stated, rates for rental of equipment cover only such time as equipment is actually used and no allowance will be made for idle time. This last percentage shown is the net accumulated increase or decrease from the original quantity in the Engineer's Estimate.

Extra Work at Force Account:

Provide additional funds for the work specified under the original Change Order No. 107.

Estimated cost of Extra Work at Force Account $25,000.00

Estimated Cost: Increase ☑ Decrease ☐ **$25,000.00**

By reason of this order the time of completion will be adjusted as follows: 0 days

Submitted by

Signature	Resident Engineer BEN GHAFGHAZI	Date 12/23/2010

Approval Recommended by

Signature	Construction Engineer Ben Ghafghazi	Date 12/23/2010

Engineer Approval by

Signature	Construction Engineer Ben Ghafghazi	Date 12/23/2010

We the undersigned contractor, have given careful consideration to the change proposed and agree, if this proposal is approved, that we will provide all equipn furnish the materials, except as may otherwise be noted above, and perform all services necessary for the work above specified, and will accept as full paymer therefor the prices shown above.

NOTE: If you, the contractor, do not sign acceptance of this order, your attention is directed to the requirements of the specifications as to proceeding with the ordered work and filing a written protest within the time therein specified.

Contractor Acceptance by

Signature NOT Required	(Print name and title)	Date

CONTRACT CHANGE ORDER

Change Requested by: Engineer

CCO 108	Suppl. No. 0	Contract No. 04 - 0120L4	Road ALA-80-1.6/2.7	FED. AID LOC.: NO FED AID

M C M CONSTRUCTION INC

You are directed to make the following changes from the plans and specifications or do the following described work not included in the plans and specifications for this contract. ***NOTE: This change order is not effective until approved by the Engineer.***

Description of work to be done, estimate of quantities and prices to be paid. (Segregate between additional work at contract price, agreed price and force account.) Unless otherwise stated, rates for rental of equipment cover only such time as equipment is actually used and no allowance will be made for idle time. This last percentage shown is the net accumulated increase or decrease from the original quantity in the Engineer's Estimate.

Extra Work at Force Account:

Provide labor, equipment, and materials as necessary to revise the bikepath support beam details and bikepath expansion joint details for Bridge No. 34-0006R as shown on sheets 2 of 7 through 7 of 7 of this CCO. All work shall be in accordance with Sections 10-1.56, "Precast Concrete Slab (Bikepath)," 10-1.61, "Bikepath Expansion Joint," and 10-1.67, "Reinforcement," of the Special Provisions.

Estimated cost of Extra Work at Force Account $10,000.00

Estimated Cost: Increase ☑ **Decrease** ☐ **$10,000.00**

By reason of this order the time of completion will be adjusted as follows: 0 days

Submitted by

Signature	Resident Engineer BEN GHAFGHAZI	Date 5/20/09

Approval Recommended by

Signature	Construction Engineer Ben Ghafghazi	Date 5/20/09

Engineer Approval by

Signature	Construction Engineer Ben Ghafghazi	Date 2/1/2010

We the undersigned contractor, have given careful consideration to the change proposed and agree, if this proposal is approved, that we will provide all equipment, furnish the materials, except as may otherwise be noted above, and perform all services necessary for the work above specified, and will accept as full payment therefor the prices shown above.

NOTE: If you, the contractor, do not sign acceptance of this order, your attention is directed to the requirements of the specifications as to proceeding with the ordered work and filing a written protest within the time therein specified.

Contractor Acceptance by

Signature	(Print name and title) EDMUNDO A. POCHI, TREASURER	Date 2/16/10

DIST.	COUNTY	ROUTE	KILOMETER POST TOTAL PROJECT	SHEET NO.	TOTAL SHEETS
04	Ala	80	1.6/2.7	291R1	643

REGISTERED ENGINEER - CIVIL
1-29-07
PLANS APPROVAL DATE

The State of California or its officers or agents shall not be responsible for the accuracy or completeness of electronic copies of this plan sheet.

T.Y. LIN / MOFFATT & NICHOL
TWO HARRISON STREET, SUITE 500
SAN FRANCISCO, CA 94105

LIM & NASCIMENTO ENGINEERING CORPORATION
12 MAUCHLY, BLDG L
IRVINE, CA 92618

To get to the Caltrans web site, go to: http://www.dot.ca.gov

PROFESSIONAL ENGINEER — MOHAN S. CHAR — No. C057894 — Exp. 6/30/10 — CIVIL — STATE OF CALIFORNIA

STAMP IS VALID FOR REVISION 1 ONLY

MARK	DATE	DESCRIPTION	BY	CH'D
1	4/15/09	STATION LINE ADDED BIKEPATH SUPPORT BEAM SPACING ADJUSTED NEAR HINGE EE	HL	MSC

REVISION(S)

CONTRACT CHANGE ORDER NO. 108
SHEET 2 OF 7 5/20/09

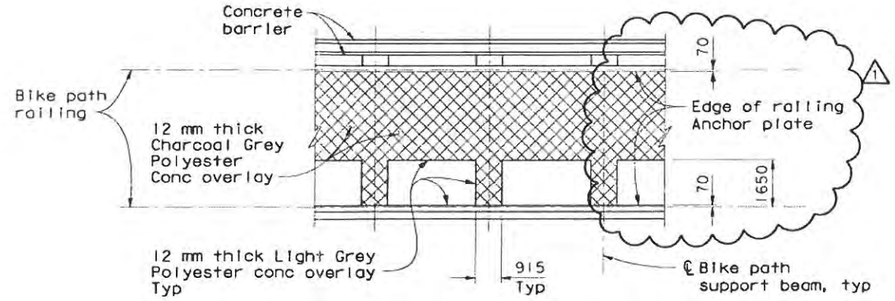

PLAN - BIKEPATH POLYESTER CONCRETE OVERLAY

1:100

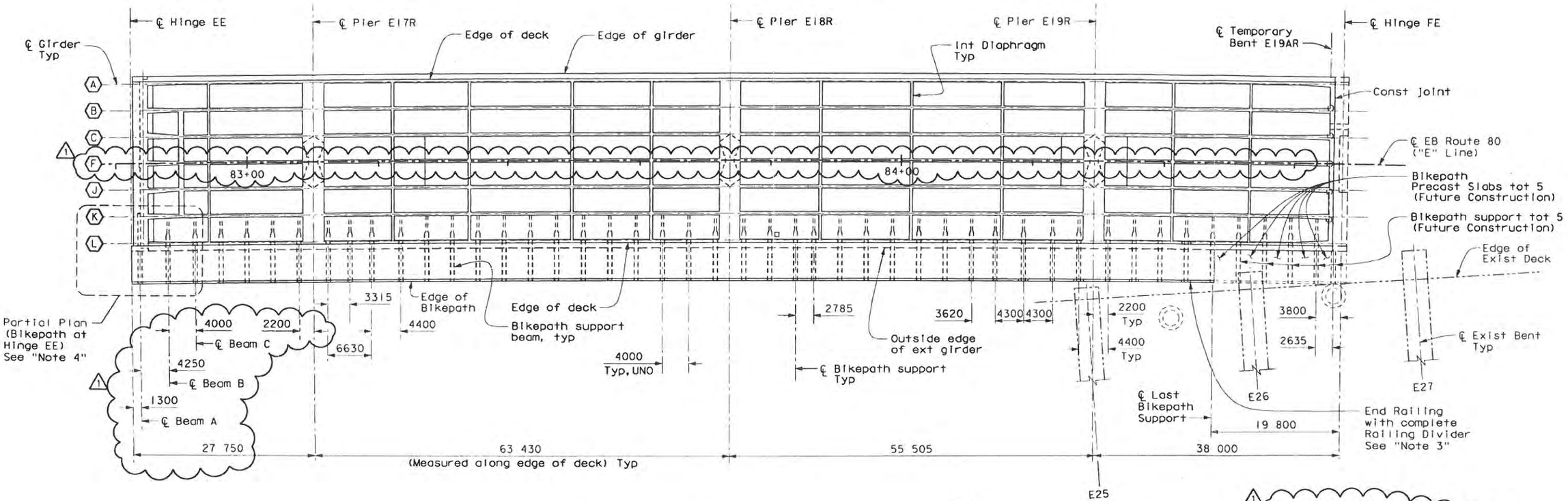

BIKEPATH LAYOUT PLAN - FRAME 1

1:300

Abbreviation:

UNO Unless Noted Otherwise

Note:
For information not shown, see "Eastbound Girder Layout No. 1 & No. 2" sheets.

Notes:

1. For Bikepath details, see "Eastbound Bikepath Details No. 2" sheet.
2. Minimum Concrete Strength:
   for Precast Slab = 42 MPa
   for CIP Conc Beam and Slab = 35 MPa
3. Provide Cast-in-place concrete edge beams and Slab to centerline of Hinge EE.

Notes (cont'd):

4. For "Partial Plan (Bikepath at Hinge EE)", see "Eastbound Bikepath Details No. 2A" sheet.
5. For railing and gate details, see "Eastbound Bikepath Railing Details" sheets.

Note:
The Contractor shall verify all controlling field dimensions before ordering or fabricating any material.

ALL DIMENSIONS ARE IN MILLIMETERS UNLESS OTHERWISE SHOWN

SAN FRANCISCO OAKLAND BAY BRIDGE
EAST SPAN SEISMIC SAFETY PROJECT

OAKLAND APPROACH STRUCTURES - PHASE 1

EASTBOUND BIKEPATH DETAILS NO. 1

DESIGN OVERSIGHT	DESIGN	DETAILS	QUANTITIES
SAM AKKAD, FRANCISCO CARPIO, BERNARD CHAN, HASAN EL-NATUR	BY M. CHAR	BY N. MORCILLO/M. ANDRASEK	BY N. MORCILLO/Y. KIM
SIGN OFF DATE: Jason Fan for Hasan 4/23/09	CHECKED T. DUDLEY	CHECKED M. CHAR	CHECKED V. SIVAKOLUNDU/T. DUDLEY

PREPARED FOR THE STATE OF CALIFORNIA DEPARTMENT OF TRANSPORTATION

MOHAN S. CHAR
PROJECT ENGINEER

BRIDGE NO. 34-0006L/R
KILOMETER POST 1.6

CU 04
EA 0120L1

Rev. Date 5-18-98

ORIGINAL SCALE IN MILLIMETERS FOR REDUCED PLANS 0 10 20 30 40 50 60 70 80 90 100

DISREGARD PRINTS BEARING EARLIER REVISION DATES

SHEET 178 OF 224

FILE => U:\BR1006\V1 050\120\L01\S\Bikepath CD\04-0120L1_S4_000_IN_S_Bikepath_EBDetail1.dgn

USERNAME => LAN DATE PLOTTED => 4/28/2009 TIME PLOTTED => 9:12:22 AM

DIST.	COUNTY	ROUTE	KILOMETER POST TOTAL PROJECT	SHEET NO.	TOTAL SHEETS
04	Ala	80	1.6/2.7	292R3	643

REGISTERED ENGINEER - CIVIL

1-29-07

PLANS APPROVAL DATE

The State of California or its officers or agents shall not be responsible for the accuracy or completeness of electronic copies of this plan sheet.

REGISTERED PROFESSIONAL ENGINEER MOHAN S. CHAR No. C057894 Exp. 6/30/08 CIVIL STATE OF CALIFORNIA

T.Y. LIN / MOFFATT & NICHOL
TWO HARRISON STREET, SUITE 500
SAN FRANCISCO, CA 94105

LIM & NASCIMENTO ENGINEERING CORPORATION
12 MAUCHLY, BLDG L
IRVINE, CA 92618

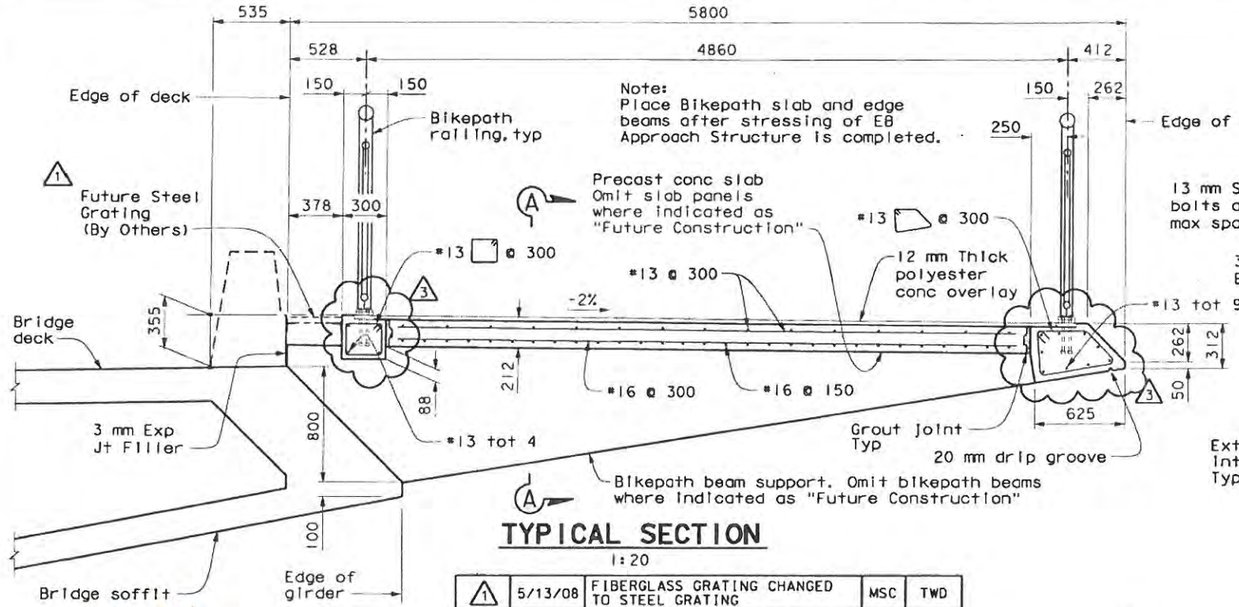

TYPICAL SECTION

1:20

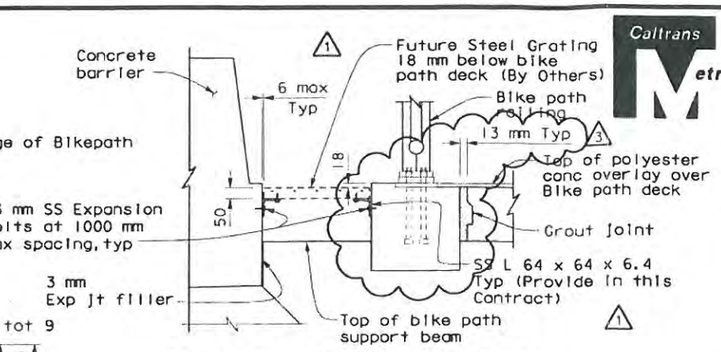

BIKEPATH GRATING DETAIL

1:10

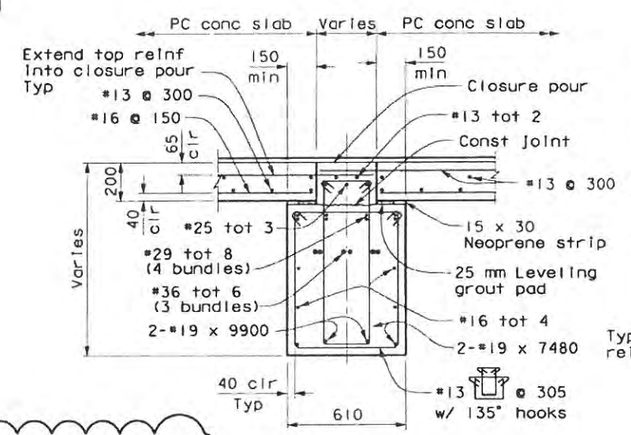

SECTION A-A

1:15

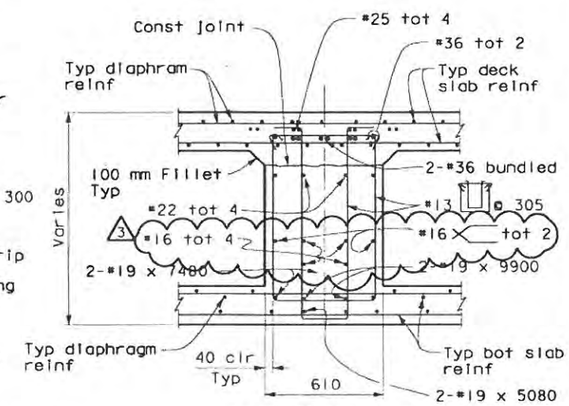

SECTION B-B

1:15

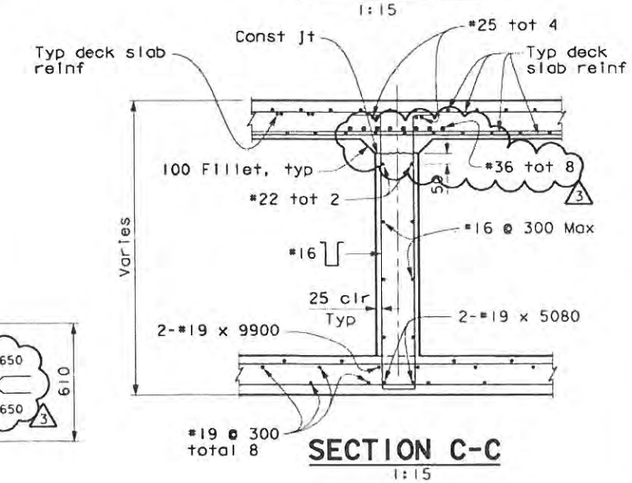

SECTION C-C

1:15

MARK	DATE	DESCRIPTIONS	BY	CH'D
1	5/13/08	FIBERGLASS GRATING CHANGED TO STEEL GRATING	MSC	TWD
2	3/9/09	ADDED DECK ACCESS OPENING; ADDED DIAPHRAGM OPENINGS	MSC	TWD
3	4/15/09	ADDED SERVICE COUPLER & REBAR CALLOUTS; CORRECTED CALLOUTS; REVISED GROUT JOINT	HL	MSC

REVISION(S)

STAMP IS VALID FOR REVISION 1, 2 & 3 ONLY

REGISTERED PROFESSIONAL ENGINEER MOHAN S. CHAR No. C057894 Exp. 6/30/10 CIVIL STATE OF CALIFORNIA

CONTRACT CHANGE ORDER NO. 108 5/20/09
SHEET 3 OF 7

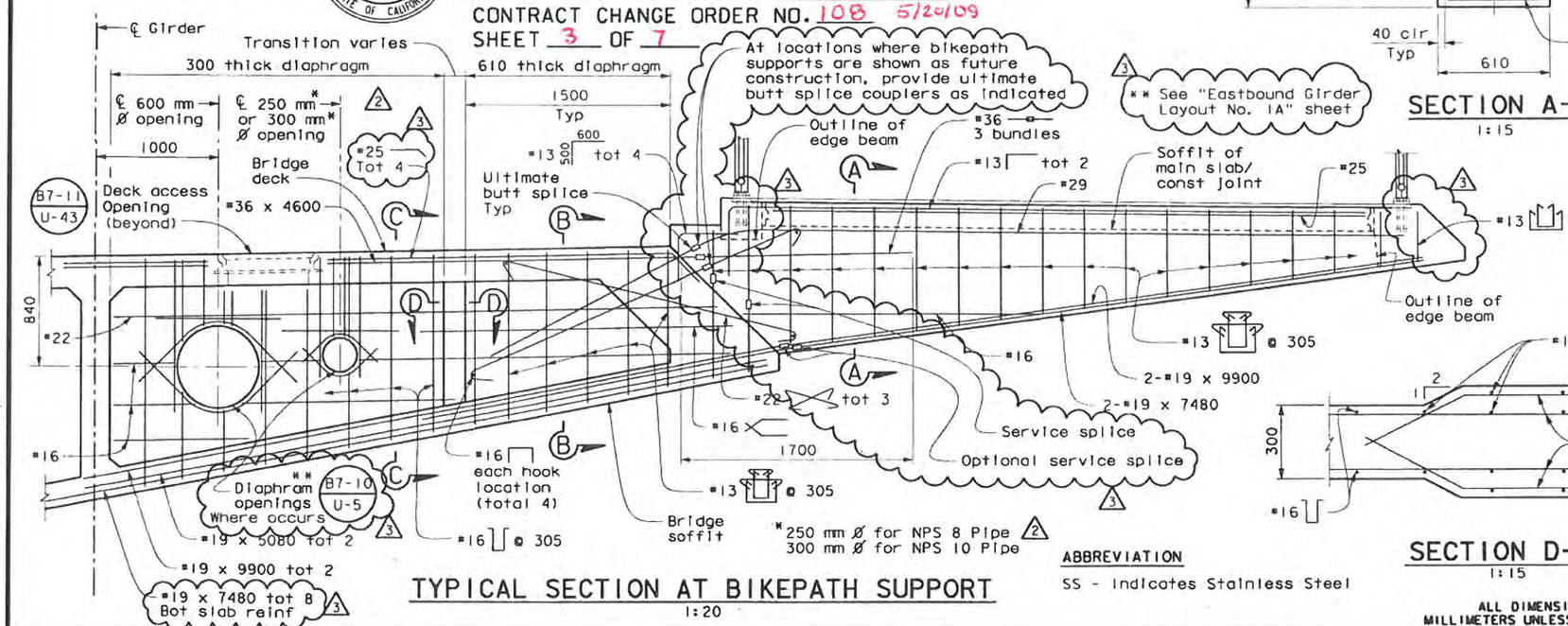

TYPICAL SECTION AT BIKEPATH SUPPORT

1:20

*250 mm Ø for NPS 8 Pipe
300 mm Ø for NPS 10 Pipe

ABBREVIATION

SS - Indicates Stainless Steel

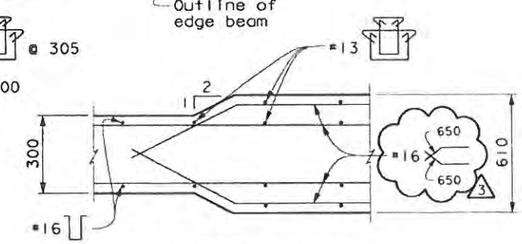

SECTION D-D

1:15

ALL DIMENSIONS ARE IN MILLIMETERS UNLESS OTHERWISE SHOWN

SAN FRANCISCO OAKLAND BAY BRIDGE
EAST SPAN SEISMIC SAFETY PROJECT

OAKLAND APPROACH STRUCTURES - PHASE I

EASTBOUND BIKEPATH DETAILS NO. 2

DESIGN OVERSIGHT: SAM AKKAD, FRANCISCO CARPIO, BERNARD CHAN, HASAN EL-NATUR — 8-10-06 SIGN OFF DATE

Jason Fan for Hasan 4/23/09

Rev. Date: 5-18-98

	BY	CHECKED
DESIGN	M. CHAR	T. DUDLEY
DETAILS	N. MORCILLO/M. ANDRASEK	M. CHAR
QUANTITIES	N. MORCILLO/Y. KIM	V. SIVAKOLUNDU/T. DUDLEY

ORIGINAL SCALE IN MILLIMETERS FOR REDUCED PLANS 0 10 20 30 40 50 60 70 80 90 100

PREPARED FOR THE STATE OF CALIFORNIA DEPARTMENT OF TRANSPORTATION

MOHAN S. CHAR
PROJECT ENGINEER

CU 04
EA 0120L1

BRIDGE NO. 34-0006L/R
KILOMETER POST 1.6

DISREGARD PRINTS BEARING EARLIER REVISION DATES

REVISION DATES (MM/DD/YY) 12/20/05 12/20/06 12/20/06 12/20/06 12/20/06 12/20/06 12/20/06 12/20/06 12/20/06 1/18/06

SHEET 179 OF 224

FILE => 04-0120L1-34-006-us-bikedet eas2.dgn

DIST.	COUNTY	ROUTE	KILOMETER POST TOTAL PROJECT	SHEET NO.	TOTAL SHEETS
04	Ala	80	1.6/2.7	292S1	643

Caltrans Metric

REGISTERED ENGINEER - CIVIL

4-15-09

PLANS APPROVAL DATE

REGISTERED PROFESSIONAL ENGINEER MOHAN S. CHAR No. C057894 Exp. 6/30/10 CIVIL STATE OF CALIFORNIA

The State of California or its officers or agents shall not be responsible for the accuracy or completeness of electronic copies of this plan sheet.

T.Y. LIN / MOFFATT & NICHOL
TWO HARRISON STREET, SUITE 500
SAN FRANCISCO, CA 94105

LIM & NASCIMENTO ENGINEERING CORPORATION
20 EMPIRE DRIVE
LAKE FOREST, CA 92630

Notes:

1. For details of expansion joint steel plates, see "Bikepath Expansion Joint Details" sheet.
2. For details of Bikepath Support Beams B & C, see "Eastbound Bikepath Details No. 2" sheet.
3. Bikepath slabs (CIP & PC) shall be constructed after all prestressing is completed.
4. For Section "T-T", see "Eastbound Bikepath Details No. 2B" supplemental sheet.
5. For Section "S-S", see "Eastbound Bikepath Details No. 2C" supplemental sheet.

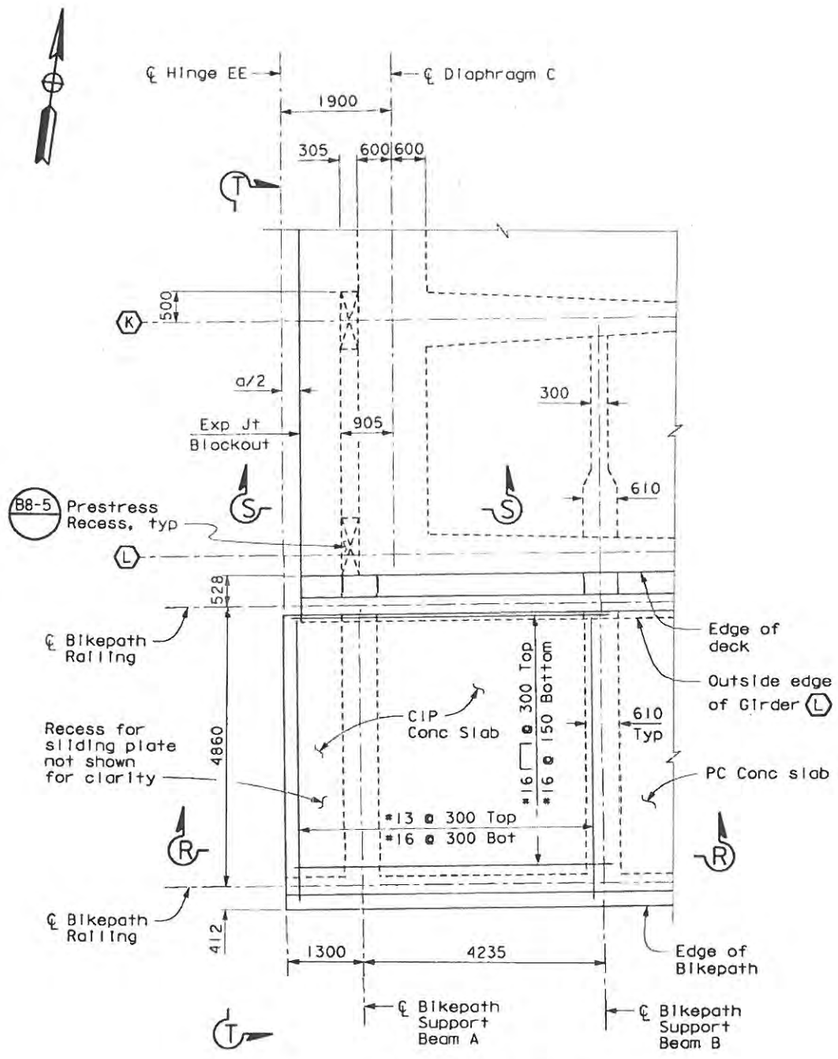

PARTIAL PLAN
(BIKEPATH AT HINGE EE)
1:50

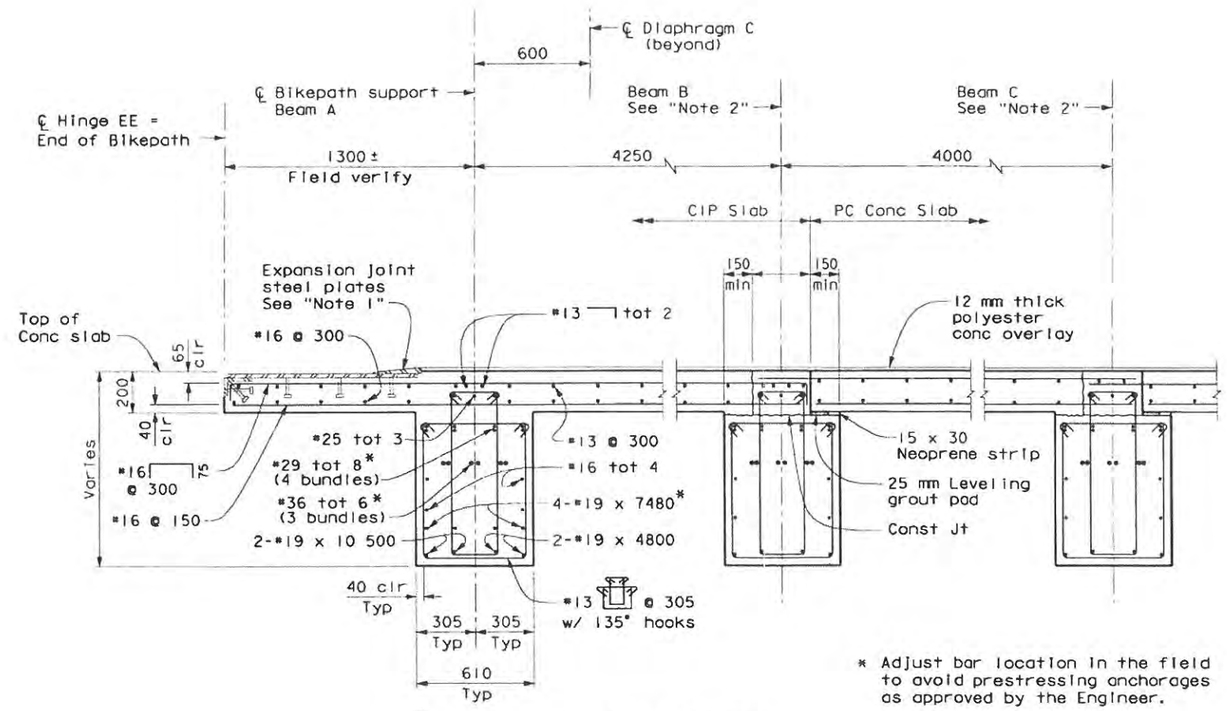

* Adjust bar location in the field to avoid prestressing anchorages as approved by the Engineer.

SECTION R-R
1:15

SUPPLEMENTAL SHEET
CONTRACT CHANGE ORDER NO. 108
SHEET 4 OF 7 5/20/09

Note: The Contractor shall verify all controlling field dimensions before ordering or fabricating any material.

ALL DIMENSIONS ARE IN MILLIMETERS UNLESS OTHERWISE SHOWN

SAN FRANCISCO OAKLAND BAY BRIDGE
EAST SPAN SEISMIC SAFETY PROJECT

OAKLAND APPROACH STRUCTURES - PHASE I

EASTBOUND BIKEPATH DETAILS NO. 2A

DESIGN OVERSIGHT: SAM AKKAD, FRANCISCO CARPIO, BERNARD CHAN, HASAN EL-MATUR — Jason Fan for Hasan 4/23/09

SIGN OFF DATE

Rev Date: 5-18-98

	BY	CHECKED
DESIGN	H. LEE	M. CHAR
DETAILS	M. ANDRASEK	M. CHAR / H. LEE
QUANTITIES	H. LEE	T. DUDLEY

PREPARED FOR THE STATE OF CALIFORNIA DEPARTMENT OF TRANSPORTATION

MOHAN S. CHAR, PROJECT ENGINEER

BRIDGE NO. 34-0006L/R

KILOMETER POST 1.6

CU 04
EA 0120L1

ORIGINAL SCALE IN MILLIMETERS FOR REDUCED PLANS 0 10 20 30 40 50 60 70 80 90 100

DISREGARD PRINTS BEARING EARLIER REVISION DATES 4/15/09

REVISION DATES (PRELIMINARY STAGE ONLY)

SHEET 179S1 OF 224

FILE => U:\BRIDGE\TYL10502\2009 CCOs\Bikepath CCO\04 0120L1-34-006-us-bikedet-east2as1.dgn

USERNAME => LAN DATE => PLOTTED => 4/18/2009 TIME PLOTTED => 11:06:08 AM

DIST.	COUNTY	ROUTE	KILOMETER POST TOTAL PROJECT	SHEET NO.	TOTAL SHEETS
04	Ala	80	1.6/2.7	292S2	643

REGISTERED ENGINEER - CIVIL

4-15-09

PLANS APPROVAL DATE

REGISTERED PROFESSIONAL ENGINEER MOHAN S. CHAR No. C057894 Exp. 6/30/10 CIVIL STATE OF CALIFORNIA

The State of California or its officers or agents shall not be responsible for the accuracy or completeness of electronic copies of this plan sheet.

T.Y. LIN / MOFFATT & NICHOL
TWO HARRISON STREET, SUITE 500
SAN FRANCISCO, CA 94105

LIM & NASCIMENTO ENGINEERING CORPORATION
20 EMPIRE DRIVE
LAKE FOREST, CA 92630

SUPPLEMENTAL SHEET
CONTRACT CHANGE ORDER NO. 108
SHEET 5 OF 7 5/20/09

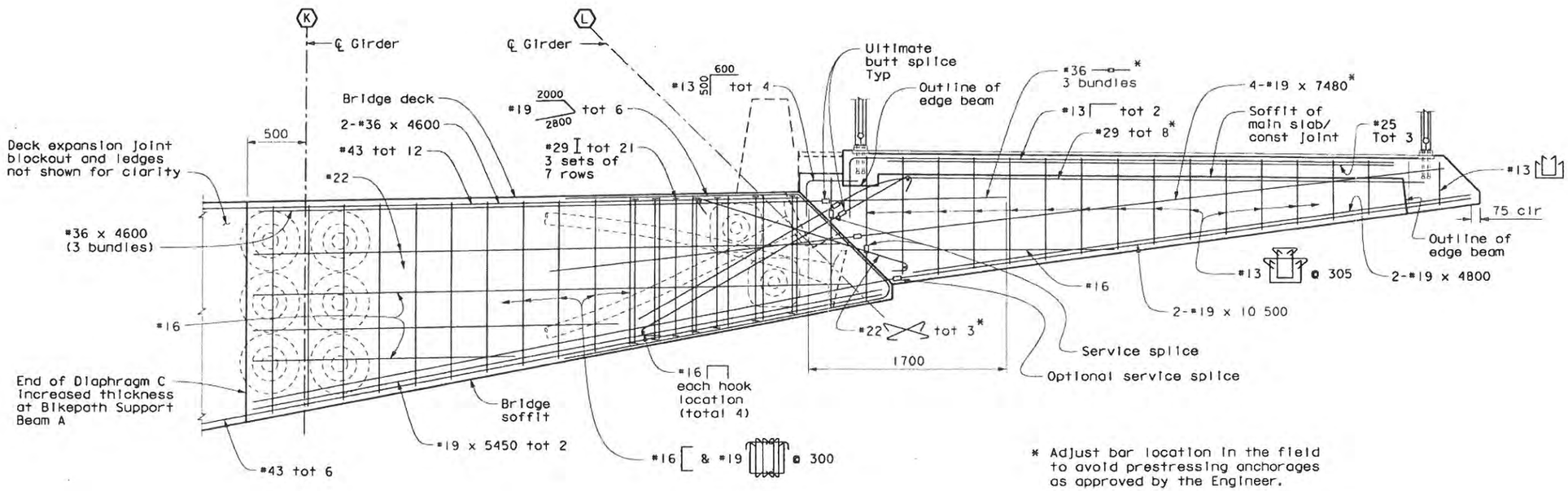

* Adjust bar location in the field to avoid prestressing anchorages as approved by the Engineer.

SECTION T-T
BIKEPATH SUPPORT BEAM A
1:20

Note:

Not all Diaphragm C reinforcement shown for clarity.

Note: The Contractor shall verify all controlling field dimensions before ordering or fabricating any material.

ALL DIMENSIONS ARE IN MILLIMETERS UNLESS OTHERWISE SHOWN

DESIGN OVERSIGHT
SAM AKKAD FRANCISCO CARPIO BERNARD CHAN HASAN EL-NATUR
SIGN OFF DATE
Jason Fan for Hasan 4/23/09

	BY	CHECKED
DESIGN	H. LEE	M. CHAR
DETAILS	M. ANDRASEK	M. CHAR / H. LEE
QUANTITIES	H. LEE	T. DUDLEY

PREPARED FOR THE STATE OF CALIFORNIA DEPARTMENT OF TRANSPORTATION

MOHAN S. CHAR
PROJECT ENGINEER

BRIDGE NO. 34-0006L/R
KILOMETER POST 1.6

SAN FRANCISCO OAKLAND BAY BRIDGE
EAST SPAN SEISMIC SAFETY PROJECT

OAKLAND APPROACH STRUCTURES - PHASE I

EASTBOUND BIKEPATH DETAILS NO. 2B

Rev. Date: 5-18-98

ORIGINAL SCALE IN MILLIMETERS FOR REDUCED PLANS 0 10 20 30 40 50 60 70 80 90 100

CU 04
EA 0120L1

DISREGARD PRINTS BEARING EARLIER REVISION DATES 4/15/09

REVISION DATES (PRELIMINARY STAGE ONLY)

SHEET 17952 OF 224

FILE => U:\BRIDGE\Y1\0502\2009 CCOs\Bikepath CCO\04-0120L1-34 0006 [illegible] eas12bs1.dgn

USERNAME => JAN DATE PLOTTED => 4/20/2009 TIME PLOTTED => 10:08:40 AM

DIST.	COUNTY	ROUTE	KILOMETER POST TOTAL PROJECT	SHEET NO.	TOTAL SHEETS
04	Ala	80	1.6/2.7	292S3	643

REGISTERED ENGINEER - CIVIL

4-15-09

PLANS APPROVAL DATE

REGISTERED PROFESSIONAL ENGINEER MOHAN S. CHAR No. C057894 Exp. 6/30/10 CIVIL STATE OF CALIFORNIA

The State of California or its officers or agents shall not be responsible for the accuracy or completeness of electronic copies of this plan sheet.

T.Y. LIN / MOFFATT & NICHOL
TWO HARRISON STREET, SUITE 500
SAN FRANCISCO, CA 94105

LIM & NASCIMENTO ENGINEERING CORPORATION
20 EMPIRE DRIVE
LAKE FOREST, CA 92630

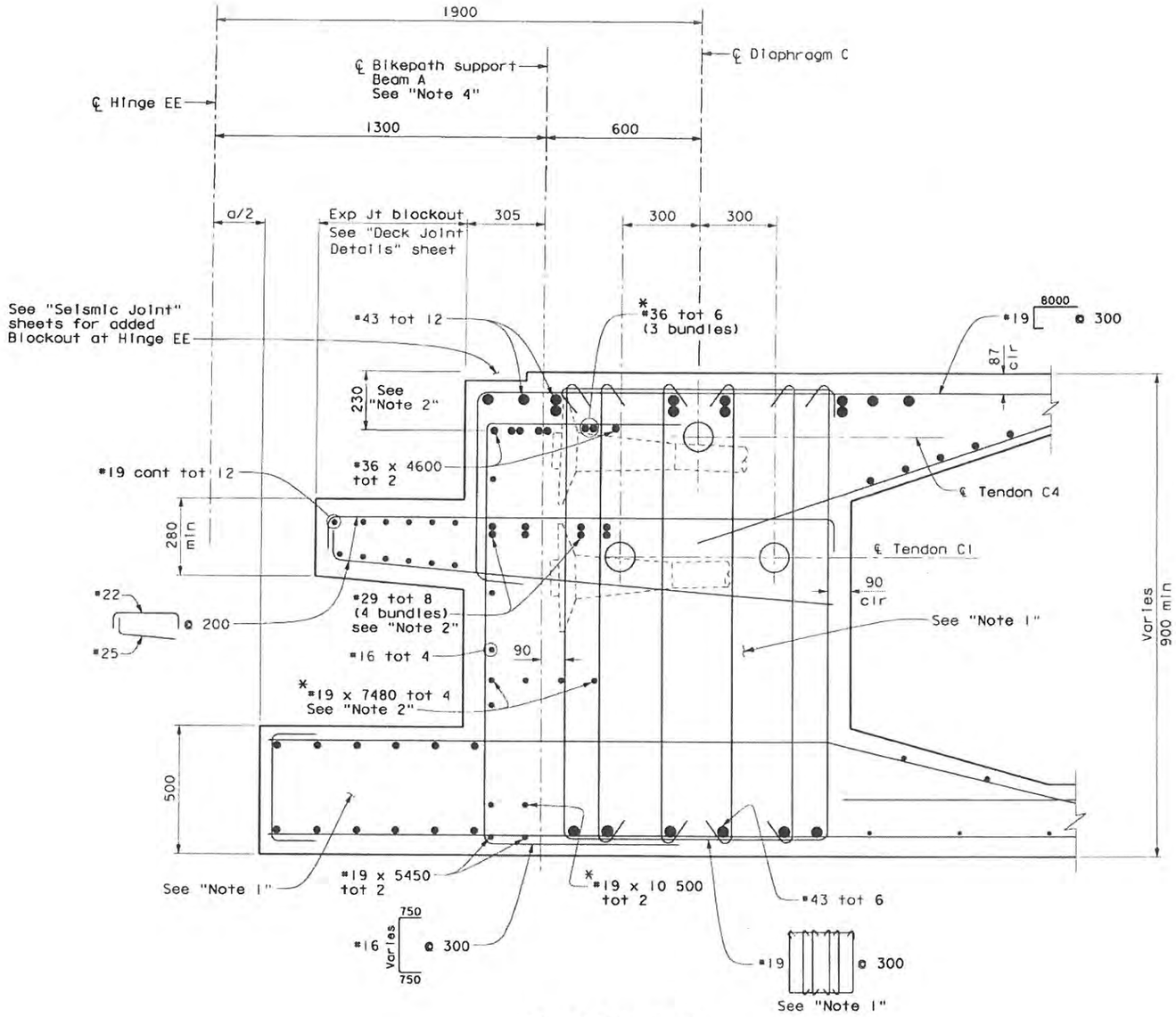

SECTION S-S
1:10

*Extend into Bikepath support beam

Notes:

1. Not all Diaphragm C reinforcement shown for clarity. For Diaphragm C reinforcement details, see "Eastbound Hinge EE Details No. 11" sheet.
2. Adjust bar location in the field to avoid prestressing anchorages as approved by the Engineer.
3. Anchorage & tendon locations shown are approximate. The Contractor to field verify and adjust the locations of rebars to avoid conflicts as approved by the Engineer.
4. For "Partial Plan (Bikepath Support at Hinge EE)", see "Eastbound Bikepath Details No. 2A" sheet.

SUPPLEMENTAL SHEET
CONTRACT CHANGE ORDER NO. 108
SHEET 6 OF 7 5/20/09

Note: The Contractor shall verify all controlling field dimensions before ordering or fabricating any material.

ALL DIMENSIONS ARE IN MILLIMETERS UNLESS OTHERWISE SHOWN

DESIGN OVERSIGHT: SAM AKKAD, FRANCISCO CARPIO, BERNARD CHAN, HASAN EL-NATUR — Jason Fan for Hasan 4/23/09

SIGN OFF DATE

Rev. Date: 5-18-98

	BY	CHECKED
DESIGN	H. LEE	M. CHAR
DETAILS	M. ANDRASEK	M. CHAR / H. LEE
QUANTITIES	H. LEE	T. DUDLEY

PREPARED FOR THE STATE OF CALIFORNIA DEPARTMENT OF TRANSPORTATION

MOHAN S. CHAR, PROJECT ENGINEER

BRIDGE NO. 34-0006L/R
KILOMETER POST 1.6

SAN FRANCISCO OAKLAND BAY BRIDGE
EAST SPAN SEISMIC SAFETY PROJECT

OAKLAND APPROACH STRUCTURES - PHASE I

EASTBOUND BIKEPATH DETAILS NO. 2C

ORIGINAL SCALE IN MILLIMETERS FOR REDUCED PLANS 0 10 20 30 40 50 60 70 80 90 100

CU 04
EA 0120L1

DISREGARD PRINTS BEARING EARLIER REVISION DATES 4/15/09

REVISION DATES (PRELIMINARY STAGE ONLY)

SHEET 179S3 OF 224

FILE => U:\BRIDGE\TYL10502\2009 CCOs\Bikepath CCO\04-012011-34-006-us-bikedet east2csl.dgn

To get to the Caltrans web site, go to: http://www.dot.ca.gov

Caltrans Metric

DIST.	COUNTY	ROUTE	KILOMETER POST TOTAL PROJECT	SHEET NO.	TOTAL SHEETS
04	Ala	80	1.6/2.7	293R2	643

REGISTERED ENGINEER - CIVIL

1-29-07
PLANS APPROVAL DATE

REGISTERED PROFESSIONAL ENGINEER A.L. ELY No. 18880 Exp. 6-30-07 CIVIL STATE OF CALIFORNIA

The State of California or its officers or agents shall not be responsible for the accuracy or completeness of electronic copies of this plan sheet.

T.Y. LIN / MOFFATT & NICHOL
TWO HARRISON STREET, SUITE 500
SAN FRANCISCO, CA 94105

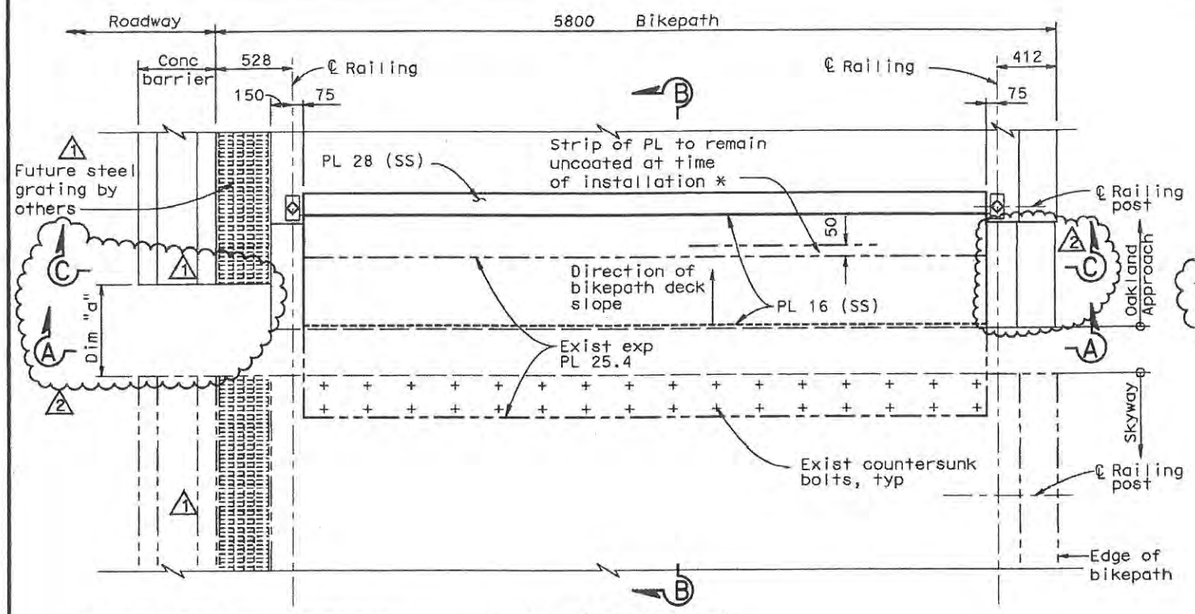

* NOTE: Exposed upper surfaces of plates shall receive a nonskid surface consisting of epoxy mixed with grit.

PLAN (HINGE E)
1:20

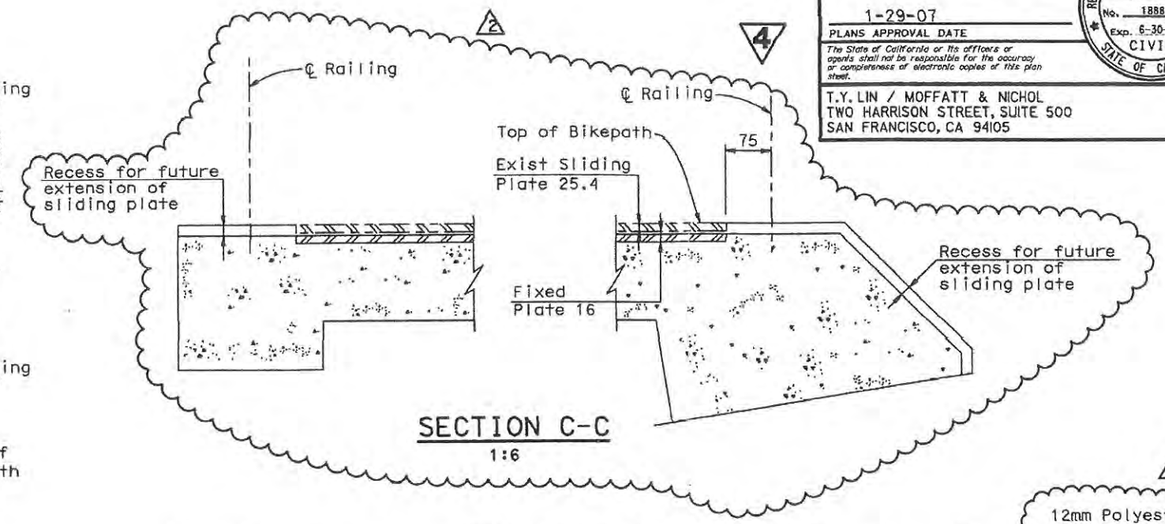

SECTION C-C
1:6

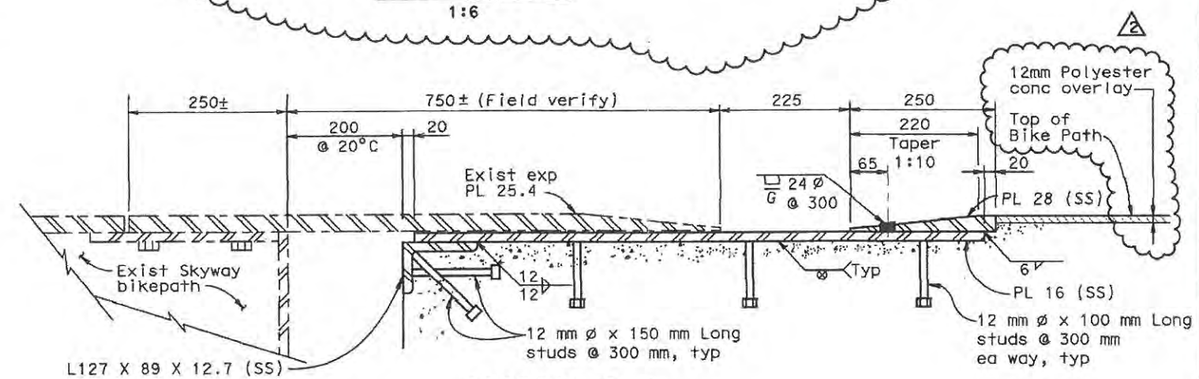

SECTION B-B
1:5

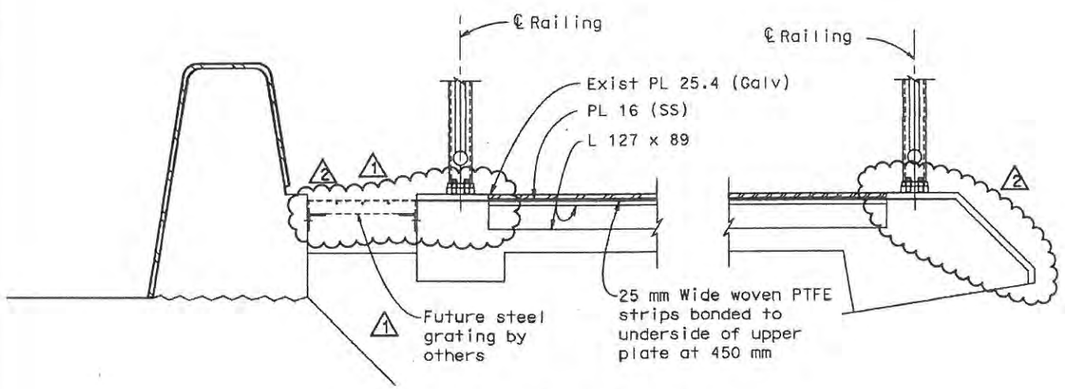

SECTION A-A
1:10

4 REVISED PER ADDENDUM No. 4 DATED MAY 24, 2007

NOTE:
The contractor shall verify all controlling field dimensions before ordering or fabricating any material or performing any work that might thereby be affected.

Note: Welding to stainless steel shall be in accordance with AWS D1.6-1999.

REGISTERED PROFESSIONAL ENGINEER JAL BIRDY No. 41547 Exp. 12-31-09 CIVIL STATE OF CALIFORNIA

STAMP IS VALID FOR REV 1 & 2 ONLY

MARK	DATE	DESCRIPTIONS	BY	CH'D
2	4/17/09	ADDED RECESS FOR FUTURE PL EXTENSION	FS	JNB
1	5/13/08	FIBERGLASS GRATING CHANGED TO STEEL, NOW BY OTHERS.	FS	JNB

REVISIONS

CONTRACT CHANGE ORDER NO. 108
SHEET 7 OF 7 5/20/09

ALL DIMENSIONS ARE IN MILLIMETERS UNLESS OTHERWISE SHOWN

SAN FRANCISCO OAKLAND BAY BRIDGE
EAST SPAN SEISMIC SAFETY PROJECT

OAKLAND APPROACH STRUCTURES-PHASE 1

BIKEPATH EXPANSION JOINT DETAILS

DESIGN OVERSIGHT
SAM AKKAD FRANCISCO CARPIO BERNARD CHAN HASAN EL-NATUR
Hasan Fan for Hasan 4/20/09
8-10-06
SIGN OFF DATE

	BY	CHECKED
DESIGN	Chan	Jain
DETAILS	van Ryn/Zucchi/Wai	Jain
QUANTITIES	Liao	E. Nichol

PREPARED FOR THE STATE OF CALIFORNIA DEPARTMENT OF TRANSPORTATION

Jal Birdy
PROJECT ENGINEER

BRIDGE NO. 34-0006 L/R
KILOMETER POST 1.6

CU 04
EA 0120L1

DISREGARD PRINTS BEARING EARLIER REVISION DATES

REVISION DATES (PRELIMINARY STAGE ONLY): 2/24/03 4/24/03 10/24/03 10/24/04 2/24/05 6/24/05 11/24/05 1/24/06 4/24/06 7/28/06

SHEET 180 OF 224

Rev. Date: 5-18-98

ORIGINAL SCALE IN MILLIMETERS FOR REDUCED PLANS 0 10 20 30 40 50 60 70 80 90 100

FILE => j:\civil\4141\100%\oak\CCO 041709\04-012011-34-006-u-ssbikeexp.dgn

USERNAME => fscamson DATE PLOTTED => 4/17/2009 TIME PLOTTED => 3:25:18 PM

STATE OF CALIFORNIA - DEPARTMENT OF TRANSPORTATION

CONTRACT CHANGE ORDER MEMORANDUM

DATE: 4/27/2009

TO: AMER BATA / BEN GHAFGHAZI

FROM: BEN GHAFGHAZI

FILE: **E.A.** 04 - 0120L4
CO-RTE-PM ALA-80-1.6/2.7
FED. NO. NO FED AID

CCO#: **108** SUPPLEMENT#: **0** Category Code: **CHPX**

CONTINGENCY BALANCE (incl. this change) **$7,372,373.20**

COST: **$10,000.00** INCREASE ☑ DECREASE ☐

HEADQUARTERS APPROVAL REQUIRED? ☐ YES ☑ NO

SUPPLEMENTAL FUNDS PROVIDED: **$0.00**

IS THIS REQUEST IN ACCORDANCE WITH ENVIRONMENTAL DOCUMENTS? ☑ YES ☐ NO

CCO DESCRIPTION:
Revise bike path transition details.

PROJECT DESCRIPTION:
Construct bridge, roadway, building and electrical system.

Original Contract Time:	Time Adj. This Change:	Previously Approved CCO Time Adjustments:	Percentage Time Adjusted: (including this change)	Total # of Unreconciled Deferred Time CCO(s): (including this change)
810 Day(s)	0 Day(s)	184 Day(s)	23 %	10

THIS CHANGE ORDER PROVIDES FOR:

Revising the bikepath support beam details and bikepath expansion joint details for Bridge No. 34-0006R as shown on sheets 2 of 7 through 7 of 7 of the CCO.

This change is necessary because the details regarding the bikepath transition between the Skyway and Oakland Touch Down structures were not shown correctly on the contract plans.

This work will be paid as Extra Work at Force Account for $10,000.00, which can be financed from the contingency fund.

This change has been discussed and concurred with Hasan El-Natur of Structures Design, Jal Birdy of Moffat Nichol, and Lina Ellis of Structures Maintenance.

No adjustment of contract time is warranted since this change does not affect the controlling operation.

CONCURRED BY:

Construction Engineer:	Ben Ghafghazi	Date 5/20/09
Bridge Engineer:	Hazzaa El-Mahmoud	Date 5/21/09
Project Engineer:	Hasan El-Natur, Structures Design	Date 4/20/09
Project Manager:		Date
FHWA Rep.:		Date
Environmental:		Date
Other (specify):	Jal Birdy, Moffat Nichol	Date 4/20/09
Other (specify):	Lina Ellis, Structures Maint.	Date 5/21/09
District Prior Approval By:		Date
HQ (Issue Approve) By:		Date
Resident Engineer's Signature:		Date 5/20/09

ESTIMATE OF COST

	THIS REQUEST	TOTAL TO DATE
ITEMS	$0.00	$0.00
FORCE ACCOUNT	$10,000.00	$10,000.00
AGREED PRICE	$0.00	$0.00
ADJUSTMENT	$0.00	$0.00
TOTAL	$10,000.00	$10,000.00

FEDERAL PARTICIPATION

☐ PARTICIPATING ☐ PARTICIPATING IN PART ☑ NONE
☐ NON-PARTICIPATING (MAINTENANCE) ☐ NON-PARTICIPATING

FEDERAL SEGREGATION (if more than one Funding Source or P.I.P. type)
☑ CCO FUNDED PER CONTRACT ☐ CCO FUNDED AS FOLLOWS

FEDERAL FUNDING SOURCE	PERCENT

ADA Notice: For individuals with sensory disabilities, this document is available in alternate formats. For information call: (916) 654-6410 or TDD (916) 654-3880 or write Records and Forms Management, 1120 N Street, MS-89, Sacramento, CA 95814.

STATE OF CALIFORNIA - DEPARTMENT OF TRANSPORTATION

CONTRACT CHANGE ORDER

Change Requested by: Engineer

CCO 109	Suppl. No. 0	Contract No. 04 - 0120L4	Road ALA-80-1.6/2.7	FED. AID LOC.: NO FED AID

M C M CONSTRUCTION INC

You are directed to make the following changes from the plans and specifications or do the following described work not included in the plans and specifications for this contract. ***NOTE: This change order is not effective until approved by the Engineer.***

Description of work to be done, estimate of quantities and prices to be paid. (Segregate between additional work at contract price, agreed price and force account.) Unless otherwise stated, rates for rental of equipment cover only such time as equipment is actually used and no allowance will be made for idle time. This last percentage shown is the net accumulated increase or decrease from the original quantity in the Engineer's Estimate.

Construct bent cap for Temporary Bent E19AR to the revised top of bent elevation shown on sheet 2 of 2 of this CCO. All work shall be in accordance with Section 10-1.53, "Concrete Structures," of the Special Provisions.

There shall be no additional cost as a result of this change.

Estimated Cost: **Increase** ☐ **Decrease** ☐ **$0.00**

By reason of this order the time of completion will be adjusted as follows: 0 days

Submitted by

Signature	Resident Engineer BEN GHAFGHAZI	Date 5/15/09

Approval Recommended by

Signature	Construction Engineer Ben Ghafghazi	Date 5/15/09

Engineer Approval by

Signature	Construction Engineer Ben Ghafghazi	Date 6/3/09

We the undersigned contractor, have given careful consideration to the change proposed and agree, if this proposal is approved, that we will provide all equipment, furnish the materials, except as may otherwise be noted above, and perform all services necessary for the work above specified, and will accept as full payment therefor the prices shown above.

NOTE: If you, the contractor, do not sign acceptance of this order, your attention is directed to the requirements of the specifications as to proceeding with the ordered work and filing a written protest within the time therein specified.

Contractor Acceptance by

Signature	(Print name and title) EDMUNDO A. NUCHI, TREASURER	Date 5/28/09

DIST.	COUNTY	ROUTE	KILOMETER POST TOTAL PROJECT	SHEET NO.	TOTAL SHEETS
04	Ala	80	1.6/2.7	199R1	643

REGISTERED ENGINEER - CIVIL
1-29-07
PLANS APPROVAL DATE
The State of California or its officers or agents shall not be responsible for the accuracy or completeness of electronic copies of this plan sheet.

T.Y. LIN / MOFFATT & NICHOL
TWO HARRISON STREET, SUITE 500
SAN FRANCISCO, CA 94105

LIM & NASCIMENTO ENGINEERING CORPORATION
12 MAUCHLY, BLDG L
IRVINE, CA 92618

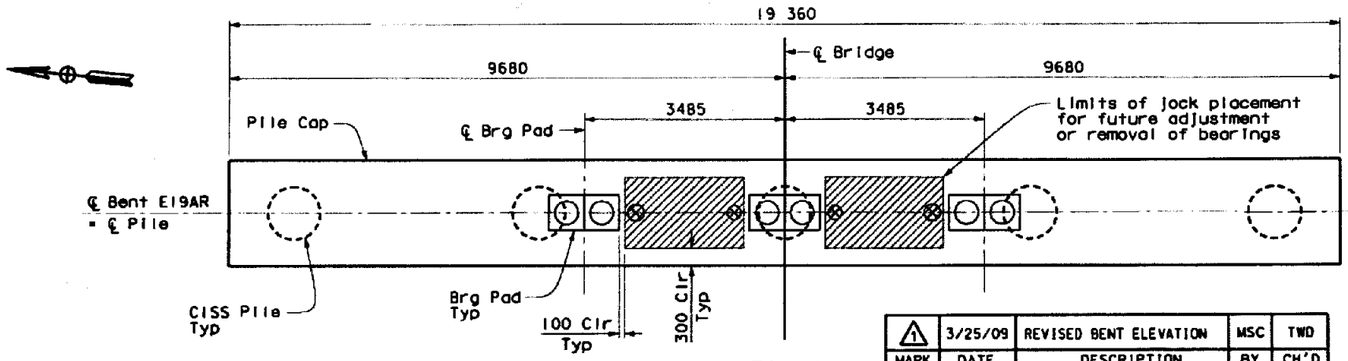

LEGEND

⊗ Jacking location, see "Plan"

⇩ Jacking location, see "Elevation"

PLAN
1:50

MARK	DATE	DESCRIPTION	BY	CH'D
1	3/25/09	REVISED BENT ELEVATION	MSC	TWD

REVISION(S)

CONTRACT CHANGE ORDER NO. 109
SHEET 2 OF 2

Jacking Notes:

1. After prestressing, completion of construction, and removal of falsework for Frame 1, and until the completion of this contract, the Contractor shall jack the superstructure at Hinge FE if required by the Engineer to compensate for settlement of Bent E19AR should it occur. Jacking shall raise the bridge to the elevation of the initial deck construction, as shown on the plans.
2. Jacks shall be clustered as close as possible to each bearing, within the limits of jack placement, as shown in the "Plan", and the center of the jacking force shall be at the centerline of bent, +/- 100 mm.
3. Jacking capacity required for the interior bearing shall be divided equally on each side of the bearing.
4. The Contractor shall remove all unnecessary construction equipment & other non-permanent loads from Bent between Bents E19R & E19AR during jacking operation.

STAMP IS VALID FOR REVISION 1 ONLY

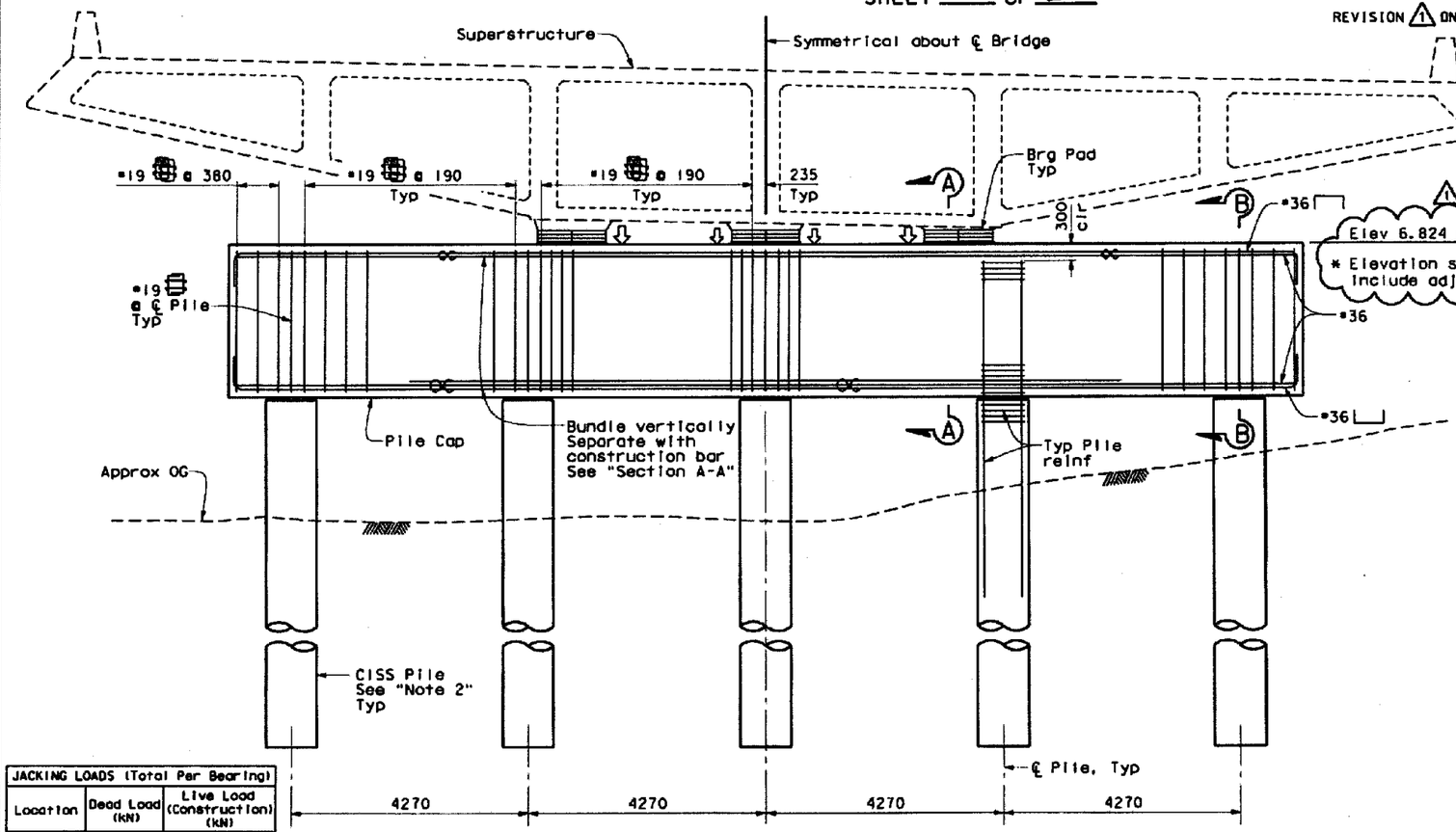

JACKING LOADS (Total Per Bearing)		
Location	Dead Load (kN)	Live Load (Construction) (kN)
Exterior Bearings	5190	740
Interior Bearing	5190	740

ELEVATION
1:50

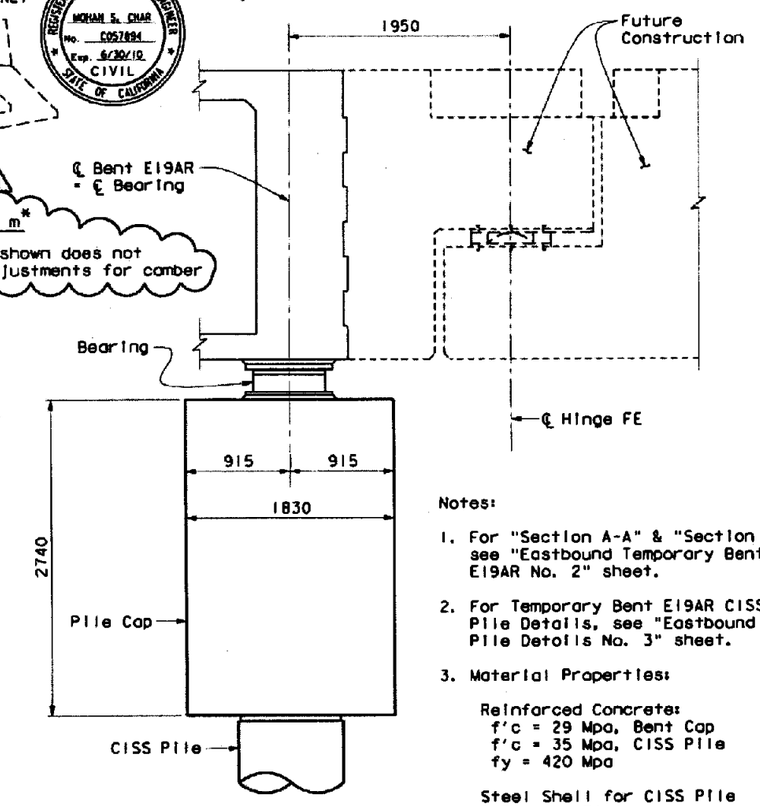

PILE CAP SECTION
1:25

Notes:

1. For "Section A-A" & "Section B-B", see "Eastbound Temporary Bent E19AR No. 2" sheet.
2. For Temporary Bent E19AR CISS Pile Details, see "Eastbound Pile Details No. 3" sheet.
3. Material Properties:

   Reinforced Concrete:
   f'c = 29 Mpa, Bent Cap
   f'c = 35 Mpa, CISS Pile
   fy = 420 Mpa

   Steel Shell for CISS Pile & Bearing Plates:
   fy = 250 Mpa

ALL DIMENSIONS ARE IN MILLIMETERS UNLESS OTHERWISE SHOWN

DESIGN OVERSIGHT
SAM AKKAD FRANCISCO CARPIO BERNARD CHAN HASAN EL-WATIR
SIGN OFF DATE 4/2/2009

	BY	CHECKED
DESIGN	R. FISH	S. MISLINKSI
DETAILS	R. ANDRASEK	M. CHAR
QUANTITIES	R. FISH	M. CHAR

PREPARED FOR THE STATE OF CALIFORNIA DEPARTMENT OF TRANSPORTATION

MOHAN S. CHAR
PROJECT ENGINEER

BRIDGE NO. 34-0006L/R
KILOMETER POST 1.6

SAN FRANCISCO OAKLAND BAY BRIDGE
EAST SPAN SEISMIC SAFETY PROJECT

OAKLAND APPROACH STRUCTURES - PHASE I

EASTBOUND TEMPORARY BENT E19AR NO. 1

CU 04
EA 0120L1

DISREGARD PRINTS BEARING EARLIER REVISION DATES

SHEET 86 OF 224

Rev. Date: 3-18-98

ORIGINAL SCALE IN MILLIMETERS FOR REDUCED PLANS 0 10 20 30 40 50 60 70 80 90 100

FILE -> u:\BRIDGE\TYI 10507\2009 CCOs\E19AR-Cam CCO\katmp01.dgn

USERNAME -> LAN DATE PLOTTED -> 4/1/2009 TIME PLOTTED -> 21:48:38 PM

STATE OF CALIFORNIA - DEPARTMENT OF TRANSPORTATION

CONTRACT CHANGE ORDER MEMORANDUM

DATE: 4/27/2009 Page 1 of 1

TO: AMER BATA / BEN GHAFGHAZI	FILE: E.A. 04 - 0120L4
FROM: BEN GHAFGHAZI	CO-RTE-PM ALA-80-1.6/2.7
	FED. NO. NO FED AID
CCO#: 109 SUPPLEMENT#: 0 Category Code: CHPR	CONTINGENCY BALANCE (incl. this change) $7,422,538.20
COST: $0.00 INCREASE ☐ DECREASE ☐	HEADQUARTERS APPROVAL REQUIRED? ☐ YES ☑ NO
SUPPLEMENTAL FUNDS PROVIDED: $0.00	IS THIS REQUEST IN ACCORDANCE WITH ENVIRONMENTAL DOCUMENTS? ☑ YES ☐ NO
CCO DESCRIPTION: Revise E19AR elevation.	**PROJECT DESCRIPTION:** Construct bridge, roadway, building and electrical system.

Original Contract Time:	Time Adj. This Change:	Previously Approved CCO Time Adjustments:	Percentage Time Adjusted: (including this change)	Total # of Unreconciled Deferred Time CCO(s): (including this change)
810 Day(s)	0 Day(s)	184 Day(s)	23 %	10

THIS CHANGE ORDER PROVIDES FOR:

Constructing bent cap for Temporary Bent E19AR to the revised top of bent elevation shown on sheet 2 of 2 of this CCO. This work shall be in accordance with Section 10-1.53, "Concrete Structures," of the Special Provisions.

This change is necessary because the elevation for Temporary Bent E19AR was shown incorrectly on the original plans.

This is no additional cost due to this change.

This change has been discussed and concurred with Hasan El-Natur of Structures Design, Jal Birdy of Moffat Nichol and Mohan Char of LAN Engineering. Maintenance concurrence is not necessary because this is temporary work.

No adjustment of contract time is warranted since this change does not affect the controlling operation.

CONCURRED BY:

Construction Engineer:	Ben Ghafghazi	Date	5/15/09
Bridge Engineer:	Mehran Ardakanian	Date	05/15/09
Project Engineer:	Hasan El-Natur, Structures Design	Date	4/10/09
Project Manager:		Date	
FHWA Rep.:		Date	
Environmental:		Date	
Other (specify):	Mohan Char, LAN Engineering	Date	4/1/09
Other (specify):	Jal Birdy, Moffat Nichol	Date	4/15/09
District Prior Approval By:		Date	
HQ (Issue Approve) By:		Date	
Resident Engineer's Signature:		Date	5/15/09

ESTIMATE OF COST

	THIS REQUEST	TOTAL TO DATE
ITEMS	$0.00	$0.00
FORCE ACCOUNT	$0.00	$0.00
AGREED PRICE	$0.00	$0.00
ADJUSTMENT	$0.00	$0.00
TOTAL	$0.00	$0.00

FEDERAL PARTICIPATION

☐ PARTICIPATING ☐ PARTICIPATING IN PART ☑ NONE
☐ NON-PARTICIPATING (MAINTENANCE) ☐ NON-PARTICIPATING

FEDERAL SEGREGATION (if more than one Funding Source or P.I.P. type)
☑ CCO FUNDED PER CONTRACT ☐ CCO FUNDED AS FOLLOWS

FEDERAL FUNDING SOURCE	PERCENT

ADA Notice: For individuals with sensory disabilities, this document is available in alternate formats. For information call: (916) 654-6410 or TDD (916) 654-3880 or write Records and Forms Management, 1120 N Street, MS-89, Sacramento, CA 95814.

STATE OF CALIFORNIA - DEPARTMENT OF TRANSPORTATION

CONTRACT CHANGE ORDER

Change Requested by: Engineer

CCO 110	Suppl. No. 0	Contract No. 04 - 0120L4	Road ALA-80-1.6/2.7	FED. AID LOC.: NO FED AID

To: **M C M CONSTRUCTION INC**

You are directed to make the following changes from the plans and specifications or do the following described work not included in the plans and specifications for this contract. ***NOTE: This change order is not effective until approved by the Engineer.***

Description of work to be done, estimate of quantities and prices to be paid. (Segregate between additional work at contract price, agreed price and force account.) Unless otherwise stated, rates for rental of equipment cover only such time as equipment is actually used and no allowance will be made for idle time. This last percentage shown is the net accumulated increase or decrease from the original quantity in the Engineer's Estimate.

Resolution of NOPC #5.

Adjustment of Compensation at Lump Sum:

Compensate the Contractor for Board of Equalization (BOE) disposal fees. For this work, the Contractor will be paid the sum of $43,092.72. This sum constitutes full compensation, including markups, for this change. This CCO serves as resolution of all issues related to NOPC #5 dated March 21, 2008, and Supplemental NOPC #5, dated April 4, 2008, and no further compensation shall be allowed.

Adjustment of Compensation at Agreed Lump Sum $43,092.72

Estimated Cost: Increase ☑ **Decrease** ☐ **$43,092.72**

By reason of this order the time of completion will be adjusted as follows: 0 days

Submitted by

Signature	Resident Engineer BEN GHAFGHAZI	Date 6/3/09

Approval Recommended by

Signature	Construction Engineer Ben Ghafghazi	Date 6/3/09

Engineer Approval by

Signature	Construction Engineer for Ben Ghafghazi / Mehran Ardalani	Date 7/20/09

We the undersigned contractor, have given careful consideration to the change proposed and agree, if this proposal is approved, that we will provide all equipment, furnish the materials, except as may otherwise be noted above, and perform all services necessary for the work above specified, and will accept as full payment therefor the prices shown above.

NOTE: If you, the contractor, do not sign acceptance of this order, your attention is directed to the requirements of the specifications as to proceeding with the ordered work and filing a written protest within the time therein specified.

Contractor Acceptance by

Signature	(Print name and title) EDMUNDO A. PUCHI, TREASURER	Date 6/10/09

STATE OF CALIFORNIA - DEPARTMENT OF TRANSPORTATION

CONTRACT CHANGE ORDER MEMORANDUM

DATE: 5/4/2009

TO: AMER BATA / BEN GHAFGHAZI	FILE: E.A. 04 - 0120L4
FROM: BEN GHAFGHAZI	CO-RTE-PM ALA-80-1.6/2.7
	FED. NO. NO FED AID
CCO#: 110 SUPPLEMENT#: 0 Category Code: EWBB	CONTINGENCY BALANCE (incl. this change) $6,523,230.20
COST: $43,092.72 INCREASE ☑ DECREASE ☐	HEADQUARTERS APPROVAL REQUIRED? ☐ YES ☑ NO
SUPPLEMENTAL FUNDS PROVIDED: $43,092.72	IS THIS REQUEST IN ACCORDANCE WITH ENVIRONMENTAL DOCUMENTS? ☑ YES ☐ NO
CCO DESCRIPTION: BOE disposal fees.	**PROJECT DESCRIPTION:** Construct bridge, roadway, building and electrical system.

Original Contract Time:	Time Adj. This Change:	Previously Approved CCO Time Adjustments:	Percentage Time Adjusted: (including this change)	Total # of Unreconciled Deferred Time CCO(s): (including this change)
810 Day(s)	0 Day(s)	184 Day(s)	23 %	10

THIS CHANGE ORDER PROVIDES FOR:

Compensation to the Contractor for Board of Equalization (BOE) disposal fees for disposal of excess structure excavation. This CCO serves as resolution of all issues related to NOPC #5 dated March 21, 2008, and Supplemental NOPC #5, dated April 4, 2008.

This change is necessary because the contract did not indicate that the fees would not be exempted. The excess soil that was disposed of contained lead. Disposal sites impose an additional fee levied by the BOE for lead contaminated soil. The State typically exempts contractors from paying the BOE disposal fees arising from material that includes aerially deposited lead. It could not be ascertained from the contract plans or Special Provisions that the fees would not be waived. The "Site Investigation Report" and the "Hazardous Waste Site Investigation Report" which were provided to all contractors at bid time also did not provide information regarding BOE fees. As a result the Contractor bid the project expecting these fees to be waived.

This work will be paid as an Adjustment of Compensation at Agreed Lump Sum of $43,092.72, which can be financed from supplemental funds of $588,000.00 allotted for this work. This sum constitutes full compensation, including markups, for this change. A detailed cost analysis is on file in the Resident Engineer's office.

This CCO was agreed to by Tony Anziano, Toll Program Manager, and the Contractor, MCM, to resolve NOPC#5. This CCO resolves all issues related to NOPC #5 and Supplemental NOPC #5 and no further compensation shall be allowed.

Design and Maintenance concurrence is not necessary since this CCO is for administrative purposes only.

No adjustment of contract time is warranted since this change does not affect the controlling operation.

CONCURRED BY:		
Construction Engineer:	Ben Ghafghazi	Date 6/3/09
Bridge Engineer:		Date
Project Engineer:		Date
Project Manager:		Date
FHWA Rep.:		Date
Environmental:		Date
Other (specify):		Date
Other (specify):		Date
District Prior Approval By:		Date
HQ (Issue Approve) By:		Date
Resident Engineer's Signature:		Date 6/3/09

ESTIMATE OF COST

	THIS REQUEST	TOTAL TO DATE
ITEMS	$0.00	$0.00
FORCE ACCOUNT	$0.00	$0.00
AGREED PRICE	$0.00	$0.00
ADJUSTMENT	$43,092.72	$43,092.72
TOTAL	$43,092.72	$43,092.72

FEDERAL PARTICIPATION

☐ PARTICIPATING ☐ PARTICIPATING IN PART ☑ NONE
☐ NON-PARTICIPATING (MAINTENANCE) ☐ NON-PARTICIPATING

FEDERAL SEGREGATION (if more than one Funding Source or P.I.P. type)
☑ CCO FUNDED PER CONTRACT ☐ CCO FUNDED AS FOLLOWS

FEDERAL FUNDING SOURCE	PERCENT

ADA Notice: For individuals with sensory disabilities, this document is available in alternate formats. For information call: (916) 654-6410 or TDD (916) 654-3880 or write Records and Forms Management, 1120 N Street, MS-89, Sacramento, CA 95814.

STATE OF CALIFORNIA - DEPARTMENT OF TRANSPORTATION

CONTRACT CHANGE ORDER

Change Requested by: Engineer

CCO 111	Suppl. No. 0	Contract No. 04 - 0120L4	Road ALA-80-1.6/2.7	FED. AID LOC.: NO FED AID

To: **M C M CONSTRUCTION INC**

You are directed to make the following changes from the plans and specifications or do the following described work not included in the plans and specifications for this contract. ***NOTE: This change order is not effective until approved by the Engineer.***

Description of work to be done, estimate of quantities and prices to be paid. (Segregate between additional work at contract price, agreed price and force account.) Unless otherwise stated, rates for rental of equipment cover only such time as equipment is actually used and no allowance will be made for idle time. This last percentage shown is the net accumulated increase or decrease from the original quantity in the Engineer's Estimate.

Change Drainage System 2 (b) from 600 MM plastic pipe to 450 MM plastic pipe and modify inlets shown on sheets 2 of 3 and 3 of 3 of this CCO.

Estimate of Decrease in Contract Item at Contract Price:

Item No. 142: 600 MM PLASTIC PIPE
-95 M (–15.83%) $413.00 /M = –$39.235.00 (–15.83%)

Total cost for Decrease in Contract Item.....($39,235.00)

Extra Work at Lump Sum:

Provide labor, equipment, and material to install 95 M of 450 MM plastic pipe for system 2 (b) and relocate inlet 2 (c) from W 87+60 to W 87+75 as shown on sheets 2 of 3 and 3 of 3 of this CCO. Modify the FL of systems 2 (a), 2 (b), and 2 (c) as shown on sheet 3 of 3 of this CCO. All work shall be in accordance with Section 10-1.08, "Plastic Pipe," of the Special Provisions. For this work, the contractor will be paid the sum of $49,100.00. This sum constitutes full compensation, including markups, for this change.

Extra Work at Agreed Lump Sum $49,400.00

Estimated Cost: **Increase** ☑ **Decrease** ☐ **$10,165.00**

By reason of this order the time of completion will be adjusted as follows: 0 days

Signature	Resident Engineer BEN GHAFGHAZI	Date 10/8/09
Signature	Construction Engineer Ben Ghafghazi	Date 10/8/09
Signature	Construction Engineer Ben Ghafghazi	Date 12/03/09

We the undersigned contractor, have given careful consideration to the change proposed and agree, if this proposal is approved, that we will provide all equipment, furnish the materials, except as may otherwise be noted above, and perform all services necessary for the work above specified, and will accept as full payment therefor the prices shown above.

NOTE: If you, the contractor, do not sign acceptance of this order, your attention is directed to the requirements of the specifications as to proceeding with the ordered work and filing a written protest within the time therein specified.

Signature	(Print name and title) EDMUNDO A. PUCHI, TREASURER	Date 11/4/09

DIST	COUNTY	ROUTE	KILOMETER POST TOTAL PROJECT	SHEET No	TOTAL SHEETS
04	Ala	80	1.6/2.7	40R1	643

REGISTERED CIVIL ENGINEER 8-30-06

1-29-07
PLANS APPROVAL DATE

REGISTERED PROFESSIONAL ENGINEER G. Fong No. 52275 Exp. 12-31-08 CIVIL STATE OF CALIFORNIA

The State of California or its officers or agents shall not be responsible for the accuracy or completeness of electronic copies of this plan sheet.

To get to the Caltrans web site, go to: http://www.dot.ca.gov

Caltrans Metric

REGISTERED PROFESSIONAL ENGINEER GARJOHN FONG No. C 052275 Exp. 12-31-2010 CIVIL STATE OF CALIFORNIA

MARK	DESCRIPTIONS	REV	CK	CCO #	DATE
1	Moved inlet location and pipe size	CF	CM	111	3/19/09

REVISIONS

Contract No. 04-0120L4
Page 2 of 3
CCO No. 111 Suppl. No.
Contractor MCM
Res. Engr. B. Ghafghazi

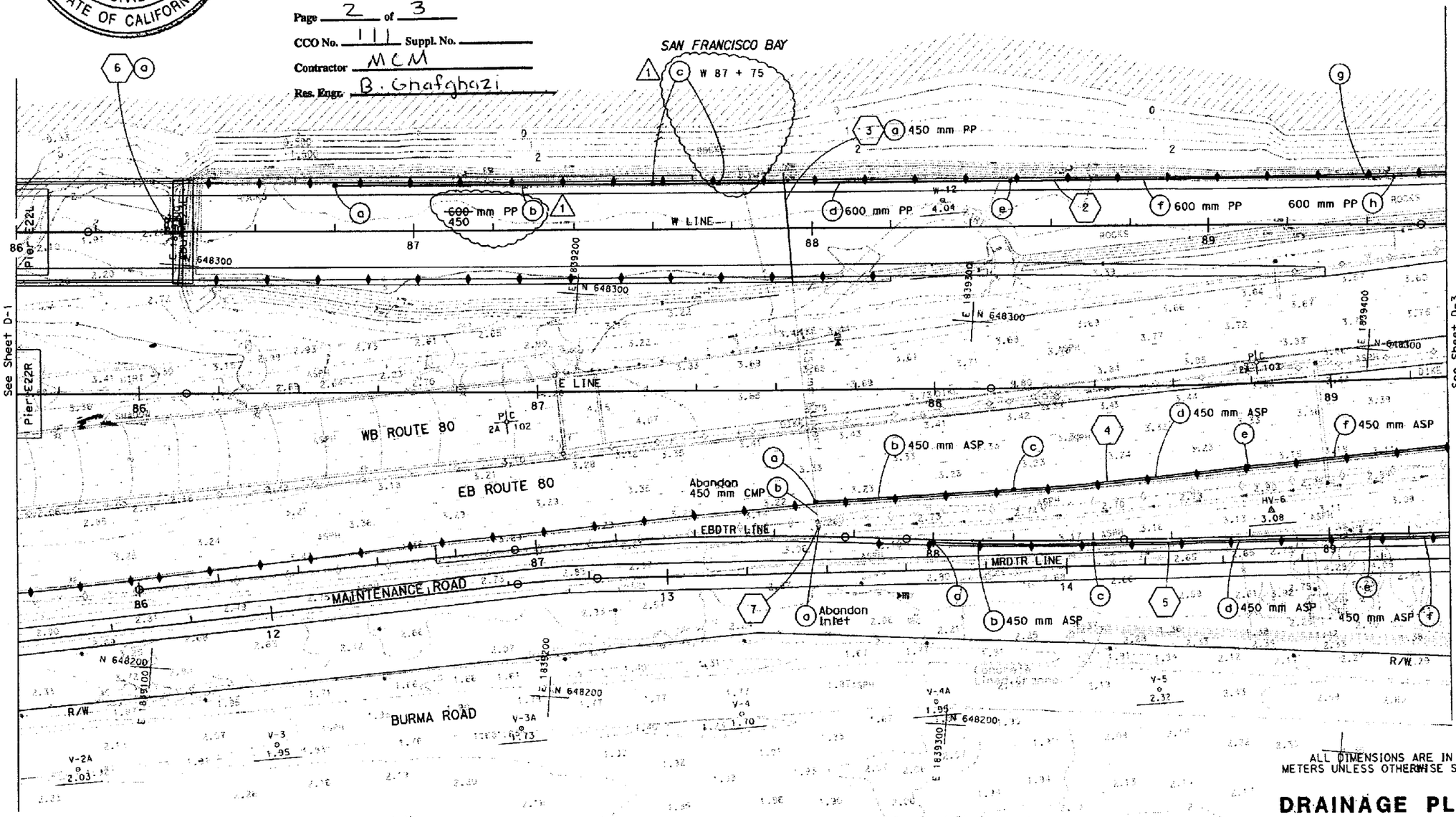

ALL DIMENSIONS ARE IN METERS UNLESS OTHERWISE SHOWN

DRAINAGE PLAN

SCALE 1:500

D-2

THIS PLAN ACCURATE FOR DRAINAGE WORK ONLY.

FOR NOTES, ABBREVIATIONS &/OR LEGEND, SEE SHEET D-1

STATE OF CALIFORNIA - DEPARTMENT OF TRANSPORTATION
Caltrans
TOLL BRIDGE
PROJECT ENGINEER J. E. GUTIERREZ
CALCULATED/DESIGNED BY
CHECKED BY
DATE REVISED BY
DATE REVISED

LAST REVISION 08-22-06
DATE PLOTTED => 06-MAY-2009
TIME PLOTTED => 11:12

FOR REDUCED PLANS ORIGINAL SCALE IS IN MILLIMETERS 0 20 40 60 80

USERNAME => s132028
DGN FILE => 40R1.dgn

CU 04251

EA 0120L1

DIST	COUNTY	ROUTE	KILOMETER POST TOTAL PROJECT	SHEET NO	TOTAL SHEETS
04	Ala	80	1.6/2.7	44R1	643

REGISTERED CIVIL ENGINEER 8-29-06

1-29-07
PLANS APPROVAL DATE

REGISTERED PROFESSIONAL ENGINEER A.G.Ureta No. 67663 Exp. 6-30-07 CIVIL STATE OF CALIFORNIA

The State of California or its officers or agents shall not be responsible for the accuracy or completeness of electronic copies of this plan sheet.

To get to the Caltrans web site, go to: http://www.dot.ca.gov

Caltrans Metric

NOTE: For Drainage System 2o and 2c Located in Barrier Slab, See Structure Plans-Barrier Slab and Wall Panel Details.

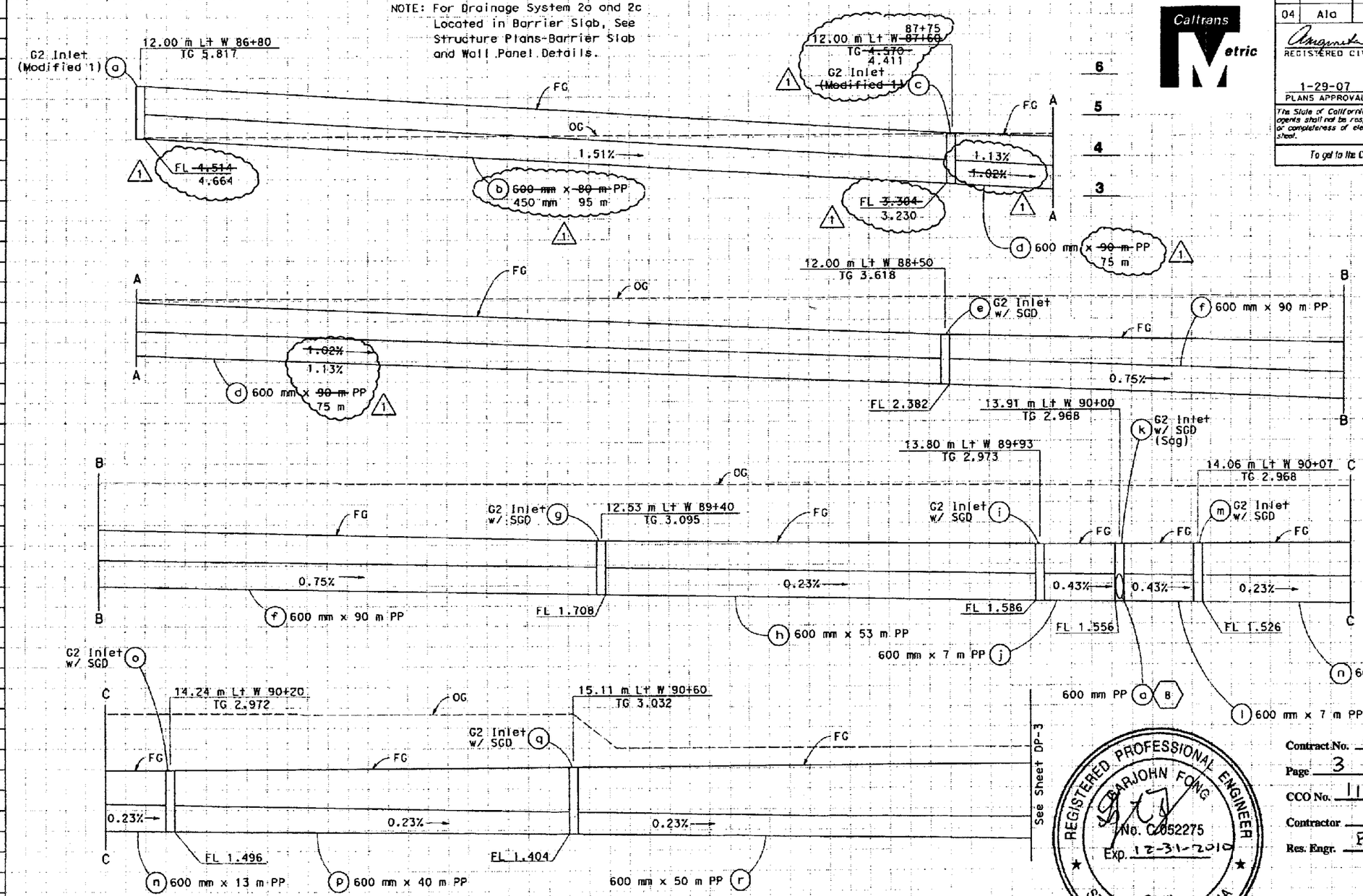

MARK	DESCRIPTIONS	REV	CK	CCO #	DATE
1	Changed Station, Pipe Size, Flow Line & Slope	GF	CM	111	3/19/09

REVISIONS

DRAINAGE SYSTEM No. 2

REGISTERED PROFESSIONAL ENGINEER SARJOHN FONG No. C052275 Exp. 12-31-2010 CIVIL STATE OF CALIFORNIA

Contract No. 04-0120L4
Page 3 of 3
CCO No. 111 Suppl. No.
Contractor MCM
Res. Engr. B. Ghafghazi

ALL DIMENSIONS ARE IN METERS UNLESS OTHERWISE SHOWN

DRAINAGE PROFILES

SCALE HORIZ 1:200
VERT 1:50

DP-2

STATE OF CALIFORNIA - DEPARTMENT OF TRANSPORTATION
Caltrans
TOLL BRIDGE
PROJECT ENGINEER J. E. GUTIERREZ
CALCULATED/DESIGNED BY
CHECKED BY
REVISED BY
DATE REVISED
DATE
Station
m³ Exc Emb

FOR REDUCED PLANS ORIGINAL SCALE IS IN MILLIMETERS 0 20 40 60 80

USERNAME => s132028
DGN FILE => 44R1.dgn

CU 04251 EA 0120L1

LAST REVISION 08-28-06
DATE PLOTTED => 06-MAY-2009
TIME PLOTTED => 11:16

STATE OF CALIFORNIA - DEPARTMENT OF TRANSPORTATION

CONTRACT CHANGE ORDER MEMORANDUM

DATE: 5/19/2009 Page 1 of 1

TO: AMER BATA / BEN GHAFGHAZI

FROM: BEN GHAFGHAZI

FILE: E.A. 04 - 0120L4
CO-RTE-PM ALA-80-1.6/2.7
FED. NO. NO FED AID

CCO#: 111 | SUPPLEMENT#: 0 | Category Code: CCPN

CONTINGENCY BALANCE (incl. this change) $6,500,730.20

COST: $10,165.00 INCREASE ☑ DECREASE ☐

HEADQUARTERS APPROVAL REQUIRED? ☐ YES ☑ NO

SUPPLEMENTAL FUNDS PROVIDED: $0.00

IS THIS REQUEST IN ACCORDANCE WITH ENVIRONMENTAL DOCUMENTS? ☑ YES ☐ NO

CCO DESCRIPTION:
Modify Drainage System 2.

PROJECT DESCRIPTION:
Construct bridge, roadway, building and electrical system.

Original Contract Time:	Time Adj. This Change:	Previously Approved CCO Time Adjustments:	Percentage Time Adjusted: (including this change)	Total # of Unreconciled Deferred Time CCO(s): (including this change)
810 Day(s)	0 Day(s)	184 Day(s)	23 %	10

THIS CHANGE ORDER PROVIDES FOR:

Changing Drainage System 2 (b) from 600 mm plastic pipe to 450 mm plastic pipe and relocating inlet 2 (c) from W 87+60 to W 87+75 as shown on sheets 2 of 3 and 3 of 3 of the CCO. Modify the FL of systems 2 (a), 2 (b), and 2 (c) as shown on sheet 3 of 3 of the CCO.

This change is necessary due to a conflict between the precast wall wire mat and drainage system on the original plans. To resolve this conflict the drainage system needs to be raised and placed between the top wire mat and the barrier slab. The 600 mm pipe will not fit within this space, therefore, the pipe will be reduced to 450 mm.

This change was requested by Jaime Gutierrez of Project Development (memo attached), and has been discussed and concurred with Garjong Fong of Hydraulics and Philip Harsono of Maintenance.

This CCO will be paid as Extra Work at Agreed Lump Sum for $49,400.00 for 450 MM pipe and inlet modification and a decrease in Item No. 142, "600 MM Plastic Pipe," of 95 M for $39,235.00 for deleting the 600 MM pipe. Net cost of this CCO is $10,165.00, which can be financed from the contingency fund.

No adjustment of contract time is warranted since this change does not affect the controlling operation.

CONCURRED BY:

Construction Engineer:	Ben Ghafghazi	Date 10/8/09
Bridge Engineer:		Date
Project Engineer:	Jaime Gutierrez	Date 3/23/09
Project Manager:		Date
FHWA Rep.:		Date
Environmental:		Date
Other (specify):	Garjong Fong, Hydraulics	Date 3/23/09
Other (specify):	Phil Harsono, Maintenance	Date 5/19/09
District Prior Approval By:		Date
HQ (Issue Approve) By:		Date
Resident Engineer's Signature:		Date 10/8/09

ESTIMATE OF COST

	THIS REQUEST	TOTAL TO DATE
ITEMS	($39,235.00)	($39,235.00)
FORCE ACCOUNT	$0.00	$30,000.00
AGREED PRICE	$49,400.00	$49,400.00
ADJUSTMENT	$0.00	$0.00
TOTAL	$10,165.00	$40,165.00

FEDERAL PARTICIPATION

☐ PARTICIPATING ☐ PARTICIPATING IN PART ☑ NONE
☐ NON-PARTICIPATING (MAINTENANCE) ☐ NON-PARTICIPATING

FEDERAL SEGREGATION (if more than one Funding Source or P.I.P. type)
☑ CCO FUNDED PER CONTRACT ☐ CCO FUNDED AS FOLLOWS

FEDERAL FUNDING SOURCE PERCENT

ADA Notice: For individuals with sensory disabilities, this document is available in alternate formats. For information call: (916) 654-6410 or TDD (916) 654-3880 or write Records and Forms Management, 1120 N Street, MS-89, Sacramento, CA 95814.

STATE OF CALIFORNIA - DEPARTMENT OF TRANSPORTATION

CONTRACT CHANGE ORDER MEMORANDUM

DATE: 11/18/2009 Page 1 of 1

AMER BATA / BEN GHAFGHAZI

FROM: BEN GHAFGHAZI

FILE: **E.A.** 04 - 0120L4
CO-RTE-PM ALA-80-1.6/2.7
FED. NO. NO FED AID

CCO#: **111** SUPPLEMENT#: **1** Category Code: **CCPN**

CONTINGENCY BALANCE (incl. this change) **$3,627,764.40**

COST: **$56,922.00** INCREASE ☑ DECREASE ☐

HEADQUARTERS APPROVAL REQUIRED? ☐ YES ☑ NO

SUPPLEMENTAL FUNDS PROVIDED: **$0.00**

IS THIS REQUEST IN ACCORDANCE WITH ENVIRONMENTAL DOCUMENTS? ☑ YES ☐ NO

CCO DESCRIPTION:
Modify inlets DS2 and pipe DS9.

PROJECT DESCRIPTION:
Construct bridge, roadway, building and electrical system.

Original Contract Time:	Time Adj. This Change:	Previously Approved CCO Time Adjustments:	Percentage Time Adjusted: (including this change)	Total # of Unreconciled Deferred Time CCO(s): (including this change)
810 Day(s)	**0** Day(s)	**184** Day(s)	**23** %	**13**

THIS CHANGE ORDER PROVIDES FOR:
Modifying drain inlets 2 (a), 2 (c), 2 (i), and 2 (k) as determined in the field. Placing 600 mm Class 4 RCP in lieu of plastic pipe for drainage system 9 (b) and backfill with slurry.

Inlets 2(a) and 2 (b) were required to be modified on CCO #111, Supplement 0. CCO #111, Supplement 0, did not include payment for these modifications and, therefore, will be included on this CCO. Inlets 2 (i) and 2 (k) require modification to place the grate at the barrier face as required per the drainage details. When the barrier and inlets are laid out per plan the grates do not line up with the face of the barrier. The inlets will be adjusted to fit the layout of the barrier. For system 9 (b) the plastic pipe shown on the plans cannot support the weight of the rip rap and, therefore, is being replaced with Class 4 RCP.

This work will be paid as Extra Work at Agreed Lump Sum of $56,922.00, which can be financed from the contingency fund. A detailed cost analysis has been performed and is on file at the Resident Engineer's office.

This change has been discussed and concurred with Jaime Gutierrez of Project Development, Garjong Fong of Hydraulics, and Philip Harsono of Maintenance.

No adjustment of contract time is warranted since this change does not affect the controlling operation.

CONCURRED BY:

Construction Engineer:	Ben Ghafghazi	Date	11/25/09
Bridge Engineer:		Date	
Project Engineer:	Jaime Gutierrez	Date	7/1/09
Project Manager:		Date	
FHWA Rep.:		Date	
Environmental:		Date	
Other (specify):	Garjon Fong, Hydraulics	Date	7/1/09
Other (specify):	Phil Harsono, Maintenance	Date	8/17/09
District Prior Approval By:		Date	
HO (Issue/Approve) By:		Date	
Resident Engineer's Signature:		Date	11/25/09

ESTIMATE OF COST

	THIS REQUEST	TOTAL TO DATE
ITEMS	$0.00	($39,235.00)
FORCE ACCOUNT	$0.00	$0.00
AGREED PRICE	$56,922.00	$106,322.00
ADJUSTMENT	$0.00	$0.00
TOTAL	$56,922.00	$67,087.00

FEDERAL PARTICIPATION

☐ PARTICIPATING ☐ PARTICIPATING IN PART ☑ NONE
☐ NON-PARTICIPATING (MAINTENANCE) ☐ NON-PARTICIPATING

FEDERAL SEGREGATION (if more than one Funding Source or P.I.P. type)
☑ CCO FUNDED PER CONTRACT ☐ CCO FUNDED AS FOLLOWS

FEDERAL FUNDING SOURCE	PERCENT

ADA Notice: For individuals with sensory disabilities, this document is available in alternate formats. For information call: (916) 654-6410 or TDD (916) 654-3880 or write Records and Forms Management, 1120 N Street, MS-89, Sacramento, CA 95814.

STATE OF CALIFORNIA - DEPARTMENT OF TRANSPORTATION

CONTRACT CHANGE ORDER

Change Requested by: Engineer

CCO 111	Suppl. No. 1	Contract No. 04 - 0120L4	Road ALA-80-1.6/2.7	FED. AID LOC.: NO FED AID

To: **M C M CONSTRUCTION INC**

You are directed to make the following changes from the plans and specifications or do the following described work not included in the plans and specifications for this contract. ***NOTE: This change order is not effective until approved by the Engineer.***

Description of work to be done, estimate of quantities and prices to be paid. (Segregate between additional work at contract price, agreed price and force account.) Unless otherwise stated, rates for rental of equipment cover only such time as equipment is actually used and no allowance will be made for idle time. This last percentage shown is the net accumulated increase or decrease from the original quantity in the Engineer's Estimate.

Extra Work at Lump Sum:

Provide labor, equipment, and materials to modify drain inlets 2 (a), 2 (c), 2 (i), and 2 (k) as determined in the field. All work shall be performed in accordance with Section 51-1.02, "Minor Structures," of the Standard Specifications.

Place 600 mm Class 4 RCP in lieu of plastic pipe for drainage system 9 (b) and backfill with slurry. Exact layout to be determined in the field. All work shall be in accordance with Section 10-1.81, "Reinforced Concrete Pipe," of the Special Provisions.

Extra Work at Agreed Lump Sum $56,922.00

Estimated Cost: Increase ☑ **Decrease** ☐ **$56,922.00**

By reason of this order the time of completion will be adjusted as follows: 0 days

Recommended by		
Signature	**Resident Engineer** BEN GHAFGHAZI	**Date** 11/25/09
Recommended by		
Signature	**Construction Engineer** Ben Ghafghazi	**Date** 11/25/09
Approved by		
Signature	**Construction Manager** Amer Bata	**Date** 3/16/10

We the undersigned contractor, have given careful consideration to the change proposed and agree, if this proposal is approved, that we will provide all equipment, furnish the materials, except as may otherwise be noted above, and perform all services necessary for the work above specified, and will accept as full payment therefor the prices shown above.

NOTE: If you, the contractor, do not sign acceptance of this order, your attention is directed to the requirements of the specifications as to proceeding with the ordered work and filing a written protest within the time therein specified.

Contractor		
Signature	**(Print name and title)** EDMUNDO A. PUCHI, TREASURER	**Date** 3/2/10

STATE OF CALIFORNIA - DEPARTMENT OF TRANSPORTATION

CONTRACT CHANGE ORDER

Change Requested by: Engineer

CCO 112	Suppl. No. 0	Contract No. 04 - 0120L4	Road ALA-80-1.6/2.7	FED. AID LOC.: NO FED AID

M C M CONSTRUCTION INC

You are directed to make the following changes from the plans and specifications or do the following described work not included in the plans and specifications for this contract. ***NOTE: This change order is not effective until approved by the Engineer.***

Description of work to be done, estimate of quantities and prices to be paid. (Segregate between additional work at contract price, agreed price and force account.) Unless otherwise stated, rates for rental of equipment cover only such time as equipment is actually used and no allowance will be made for idle time. This last percentage shown is the net accumulated increase or decrease from the original quantity in the Engineer's Estimate.

Revise pavement elevations for right edge of shoulder on W-line between Station 89+40 and 93+00 as shown on sheets 2 of 4 through 4 of 4 of this CCO.

There shall be no additional cost as a result of this change.

Estimated Cost: **Increase** ☐ **Decrease** ☐ **$0.00**

By reason of this order the time of completion will be adjusted as follows: 0 days

Submitted by

Signature	Resident Engineer BEN GHAFGHAZI	Date 6/1/09

Approval Recommended by

Signature	Construction Engineer Ben Ghafghazi	Date 6/1/09

Engineer Approval by

Signature	Construction Engineer Ben Ghafghazi	Date 8/27/09

We the undersigned contractor, have given careful consideration to the change proposed and agree, if this proposal is approved, that we will provide all equipment, furnish the materials, except as may otherwise be noted above, and perform all services necessary for the work above specified, and will accept as full payment therefor the prices shown above.

NOTE: If you, the contractor, do not sign acceptance of this order, your attention is directed to the requirements of the specifications as to proceeding with the ordered work and filing a written protest within the time therein specified.

Contractor Acceptance by

Signature	(Print name and title) Edmundo A. Pucci Treasurer + General Counsel	Date 8-24-2009

DIST	COUNTY	ROUTE	KILOMETER POST TOTAL PROJECT	SHEET No	TOTAL SHEETS
04	Ala	80	1.6/2.7	18R1	643

REGISTERED CIVIL ENGINEER

PLANS APPROVAL DATE

REGISTERED PROFESSIONAL ENGINEER No. Exp. CIVIL STATE OF CALIFORNIA

The State of California or its officers or agents shall not be responsible for the accuracy or completeness of electronic copies of this plan sheet.

To get to the Caltrans web site, go to: http://www.dot.ca.gov

Caltrans Metric

NOTE:

1. All Elevations are 10 meters apart unless otherwise noted.
2. W-Line RES design elevations are shown in table attached on sheet C-4

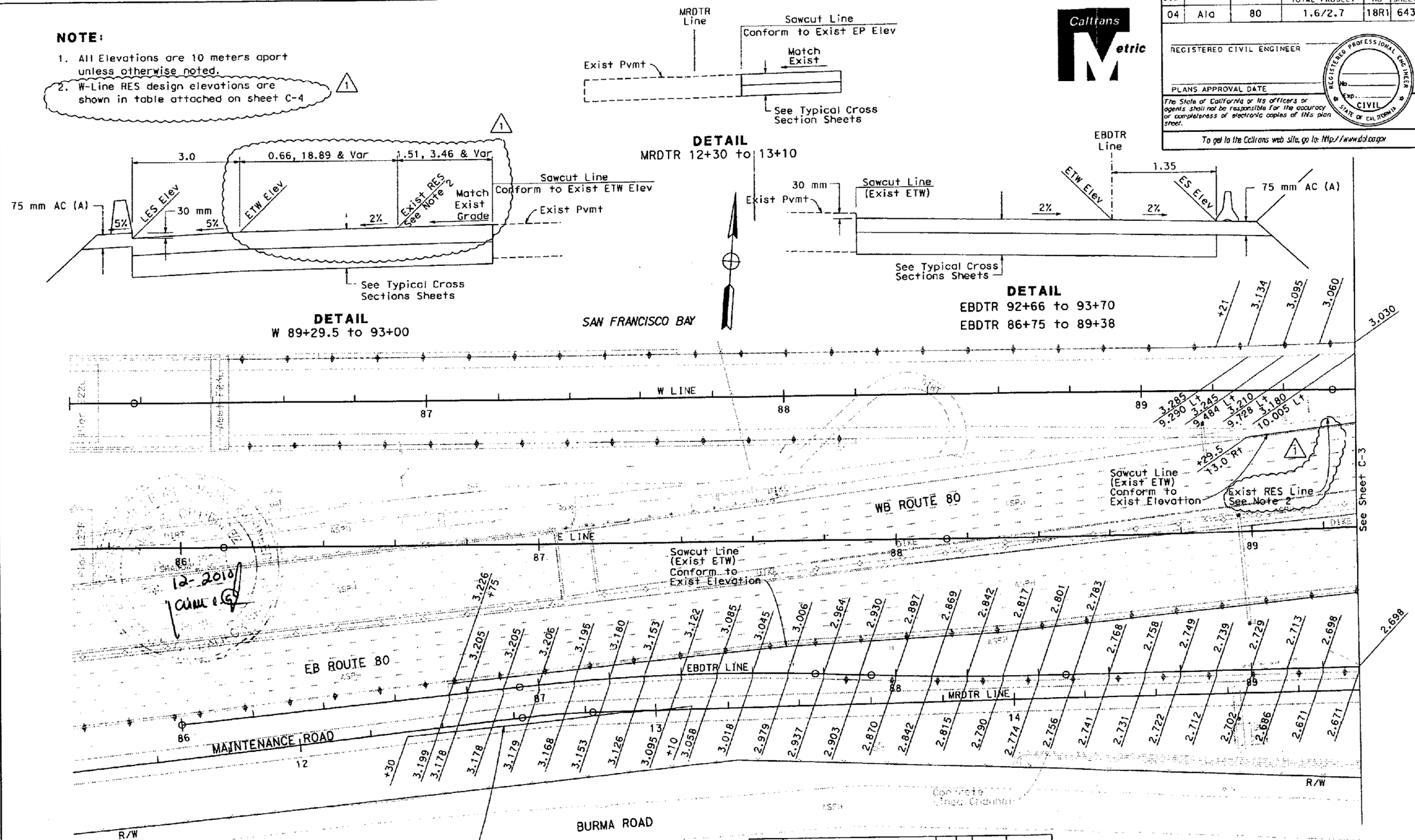

MARK	DESCRIPTIONS	REV	CK	CCO #	DATE
1	Added W-Line RES design elevations	CM	TH	112	5/05/09

REVISIONS

ALL DIMENSIONS ARE IN METERS UNLESS OTHERWISE SHOWN

CONSTRUCTION DETAILS
PAVEMENT ELEVATION PLAN

SCALE 1:500

C-2

FOR NOTES, ABBREVIATIONS &/OR LEGEND, SEE SHEET C-1

THIS PLAN ACCURATE FOR PAVEMENT ELEVATION WORK ONLY

Contract No. 04-0120L4

Page 2 of 4

CCO No. 112 Suppl. No.

Contractor MLM

Res. Engr. B. Grafghazi

STATE OF CALIFORNIA - DEPARTMENT OF TRANSPORTATION

Caltrans

TOLL BRIDGE

PROJECT ENGINEER J. E. GUTIERREZ

CALCULATED/DESIGNED BY | CHECKED BY | REVISED BY | DATE REVISED | DATE | REVISED BY | DATE REVISED

LAST REVISION 08-07-06 | DATE PLOTTED => 05-MAY-2009 | TIME PLOTTED => 13:39

FOR REDUCED PLANS ORIGINAL SCALE IS IN MILLIMETERS 0 20 40 60 80

USERNAME => s132028
DGN FILE => 18R1.dgn

CU 04251 | EA 0120L1

DIST	COUNTY	ROUTE	KILOMETER POST TOTAL PROJECT	SHEET No	TOTAL SHEETS
04	Ala	80	1.6/2.7	19R1	643

REGISTERED CIVIL ENGINEER

PLANS APPROVAL DATE

REGISTERED PROFESSIONAL ENGINEER — CIVIL — STATE OF CALIFORNIA

The State of California or its officers or agents shall not be responsible for the accuracy or completeness of electronic copies of this plan sheet.

To get to the Caltrans web site, go to: http://www.dot.ca.gov

Caltrans Metric

REGISTERED PROFESSIONAL ENGINEER — JAMES E. GUTIERREZ — No. C 059624 — CIVIL — STATE OF CALIFORNIA — 12-2010

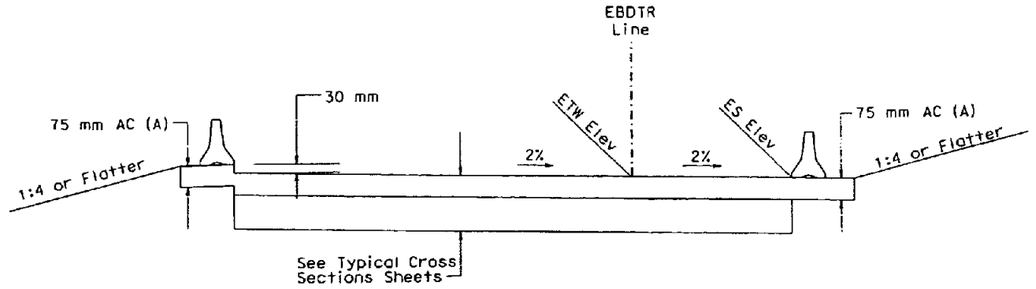

DETAIL
EBDTR 89+38 to 92+66

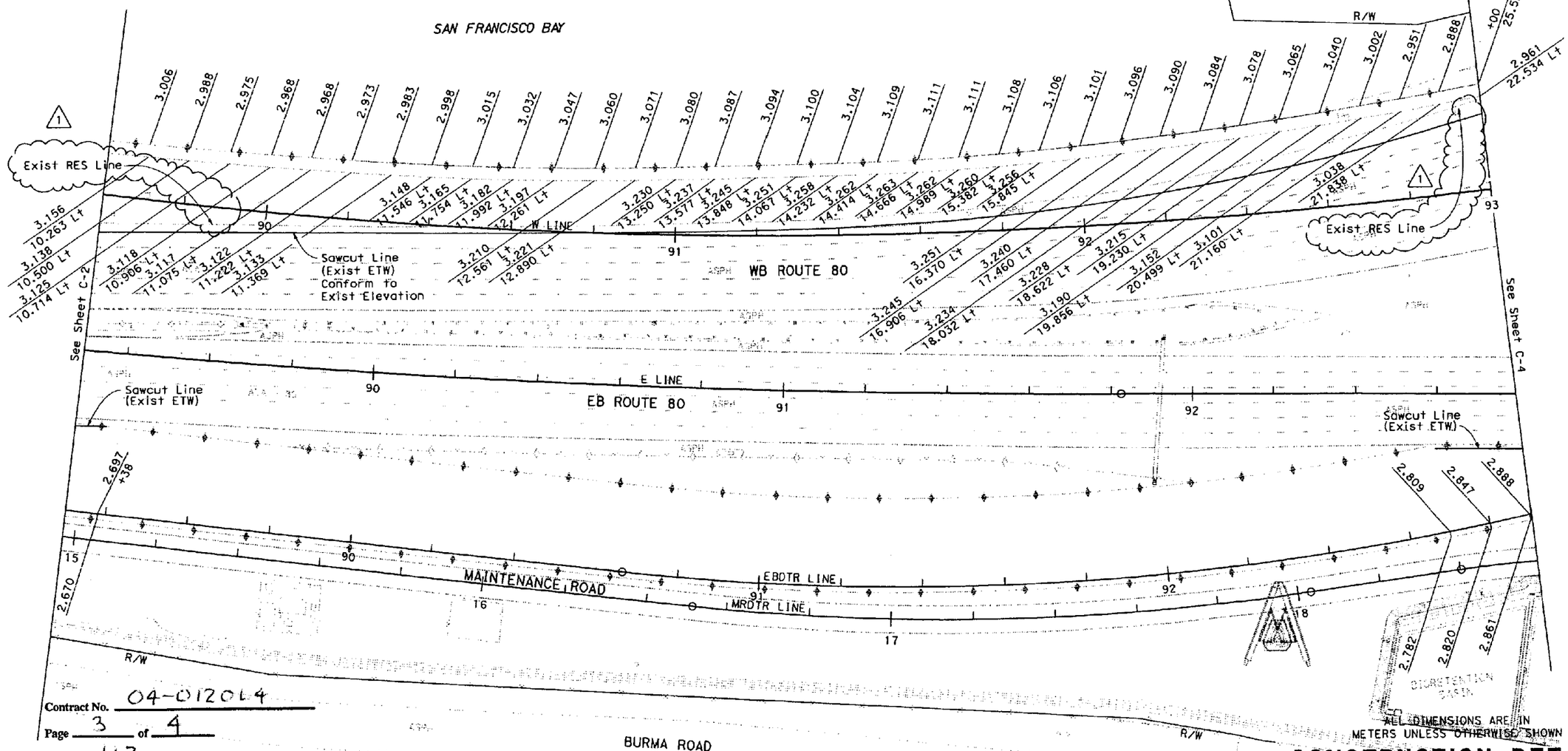

Contract No. 04-0120L4
Page 3 of 4
CCO No. 112 Suppl. No.
Contractor MCM
Res. Engr. B. Ghafghazi

FOR NOTES, ABBREVIATIONS &/OR LEGEND, SEE SHEET C-1

THIS PLAN ACCURATE FOR PAVEMENT ELEVATION ONLY

ALL DIMENSIONS ARE IN METERS UNLESS OTHERWISE SHOWN

CONSTRUCTION DETAILS
PAVEMENT ELEVATION PLAN
SCALE 1:500

C-3

STATE OF CALIFORNIA - DEPARTMENT OF TRANSPORTATION
Caltrans
TOLL BRIDGE

PROJECT ENGINEER J. E. GUTIERREZ

CALCULATED/DESIGNED BY | DATE | REVISED BY
CHECKED BY | DATE REVISED

LAST REVISION 08-07-06 | DATE PLOTTED => 05-MAY-2009 | TIME PLOTTED => 13:40

FOR REDUCED PLANS ORIGINAL SCALE IS IN MILLIMETERS 0 20 40 60 80

USERNAME => s132028
DGN FILE => 19R1.dgn

CU 04251 | EA 0120L1

DIST	COUNTY	ROUTE	KILOMETER POST TOTAL PROJECT	SHEET No	TOTAL SHEETS
04	Ala	80	1.6/2.7	20R1	643

REGISTERED CIVIL ENGINEER

PLANS APPROVAL DATE

REGISTERED PROFESSIONAL ENGINEER No. Exp. CIVIL STATE OF CALIFORNIA

The State of California or its officers or agents shall not be responsible for the accuracy or completeness of electronic copies of this plan sheet.

To get to the Caltrans web site, go to: http://www.dot.ca.gov

Caltrans Metric

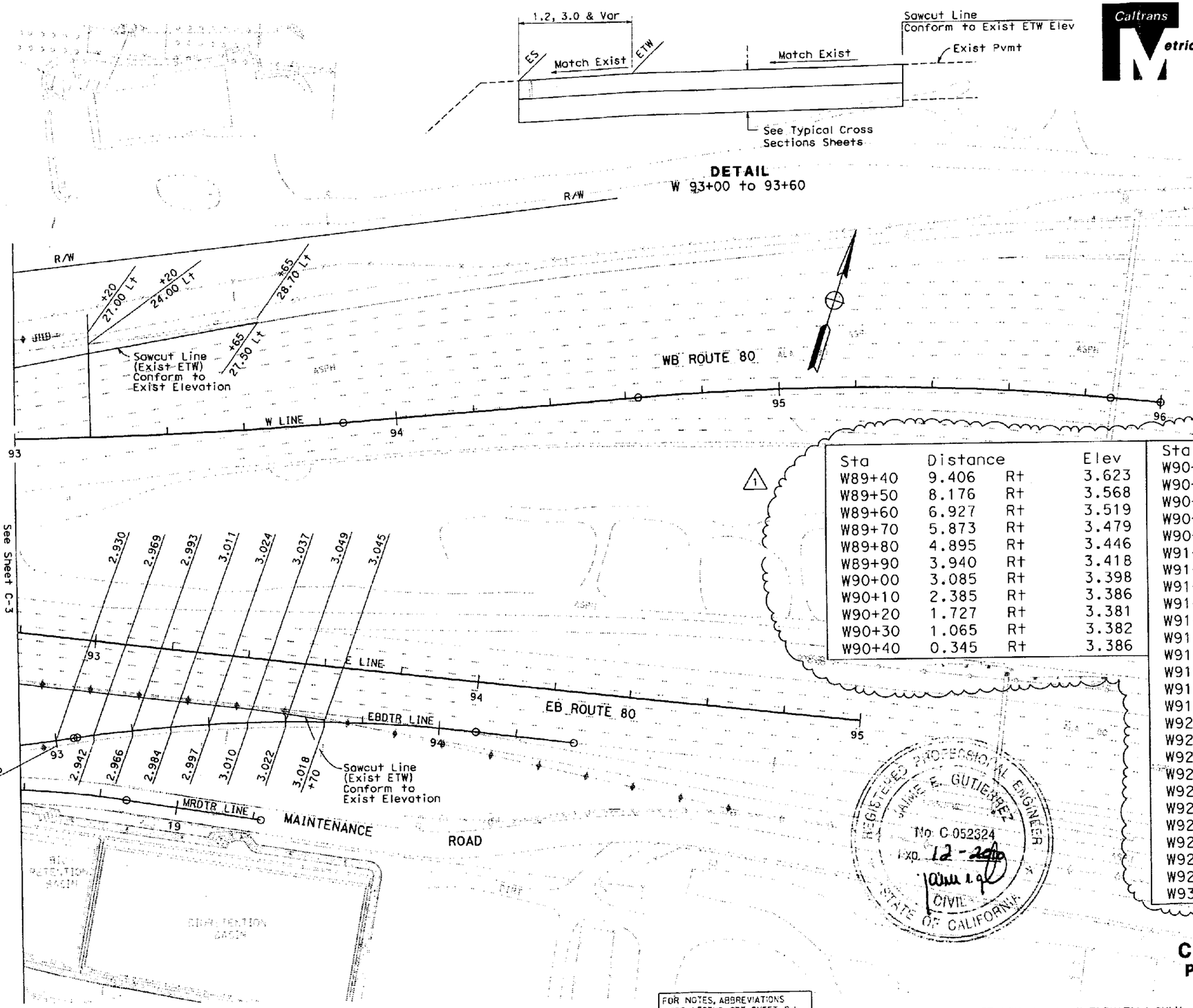

Contract No. 04-0120L4

Page 4 of 4

CCO No. 112 Suppl. No.

Contractor MCM

Res. Engr. B. Ghafghazi

W-LINE RES DESIGN ELEVATIONS

Sta	Distance		Elev
W89+40	9.406	Rt	3.623
W89+50	8.176	Rt	3.568
W89+60	6.927	Rt	3.519
W89+70	5.873	Rt	3.479
W89+80	4.895	Rt	3.446
W89+90	3.940	Rt	3.418
W90+00	3.085	Rt	3.398
W90+10	2.385	Rt	3.386
W90+20	1.727	Rt	3.381
W90+30	1.065	Rt	3.382
W90+40	0.345	Rt	3.386

Sta	Distance		Elev
W90+50	0.267	Lt	3.395
W90+60	0.758	Lt	3.407
W90+70	1.231	Lt	3.418
W90+80	1.695	Lt	3.427
W90+90	2.263	Lt	3.434
W91+00	2.674	Lt	3.442
W91+10	3.009	Lt	3.448
W91+20	3.275	Lt	3.456
W91+30	3.523	Lt	3.462
W91+40	3.855	Lt	3.466
W91+50	4.301	Lt	3.464
W91+60	4.736	Lt	3.462
W91+70	5.224	Lt	3.457
W91+80	5.883	Lt	3.450
W91+90	6.548	Lt	3.442
W92+00	7.210	Lt	3.434
W92+10	8.138	Lt	3.420
W92+20	9.223	Lt	3.405
W92+30	10.569	Lt	3.383
W92+40	12.057	Lt	3.360
W92+50	13.578	Lt	3.328
W92+60	15.154	Lt	3.284
W92+70	16.773	Lt	3.227
W92+80	18.402	Lt	3.156
W92+90	20.058	Lt	3.074
W93+00	21.872	Lt	2.974

REGISTERED PROFESSIONAL ENGINEER JAIME E. GUTIERREZ No. C 052324 Exp. 12-2010 CIVIL STATE OF CALIFORNIA

ALL DIMENSIONS ARE IN METERS UNLESS OTHERWISE SHOWN

CONSTRUCTION DETAILS
PAVEMENT ELEVATION PLAN

SCALE 1:500

C-4

FOR NOTES, ABBREVIATIONS &/OR LEGEND, SEE SHEET C-1

THIS PLAN ACCURATE FOR PAVEMENT ELEVATION ONLY

STATE OF CALIFORNIA - DEPARTMENT OF TRANSPORTATION

Caltrans

TOLL BRIDGE

PROJECT ENGINEER J. E. GUTIERREZ

DATE	REVISED BY	DATE REVISED

CALCULATED/DESIGNED BY

CHECKED BY

LAST REVISION 07-21-06

DATE PLOTTED => 05-MAY-2009

TIME PLOTTED => 13:55

FOR REDUCED PLANS ORIGINAL SCALE IS IN MILLIMETERS 0 20 40 60 80

USERNAME => s132028

DGN FILE => 20R1.dgn

CU 04251

EA 0120L1

STATE OF CALIFORNIA - DEPARTMENT OF TRANSPORTATION

CONTRACT CHANGE ORDER MEMORANDUM

DATE: 5/26/2009 Page 1 of 1

TO: AMER BATA / BEN GHAFGHAZI	FILE: E.A. 04 - 0120L4
FROM: BEN GHAFGHAZI	CO-RTE-PM ALA-80-1.6/2.7
	FED. NO. NO FED AID
CCO#: 112 SUPPLEMENT#: 0 Category Code: CJPA	CONTINGENCY BALANCE (incl. this change) $7,320,268.20
COST: $0.00 INCREASE ☐ DECREASE ☐	HEADQUARTERS APPROVAL REQUIRED? ☐ YES ☑ NO
SUPPLEMENTAL FUNDS PROVIDED: $0.00	IS THIS REQUEST IN ACCORDANCE WITH ENVIRONMENTAL DOCUMENTS? ☑ YES ☐ NO
CCO DESCRIPTION: Revise W line grades.	**PROJECT DESCRIPTION:** Construct bridge, roadway, building and electrical system.

Original Contract Time:	Time Adj. This Change:	Previously Approved CCO Time Adjustments:	Percentage Time Adjusted: (including this change)	Total # of Unreconciled Deferred Time CCO(s): (including this change)
810 Day(s)	0 Day(s)	184 Day(s)	23 %	10

THIS CHANGE ORDER PROVIDES FOR:

Revising pavement elevations for right edge of shoulder on W-line between Station 89+40 and 93+00 as shown on sheets 2 of 4 through 4 of 4 of the CCO.

This change is necessary to construct the W-line to the ultimate cross slope of 2%. Per the contract plans the W-line traveled way is shown matching the existing cross slope. In order to conform with finish grades of the upcoming Oakland Touch Down 2 project, the elevations will be revised to provide a 2% slope.

This is no additional cost due to this change.

This change was requested by Jaime Gutierrez of Project Development (memo attached). Maintenance concurrence is not necessary because this CCO will not change the final configuration of the roadway.

No adjustment of contract time is warranted since this change does not affect the controlling operation.

CONCURRED BY:

Construction Engineer:	Ben Ghafghazi	Date 6/1/09
Bridge Engineer:		Date
Project Engineer:	Jaime Gutierrez	Date 5/5/09
Project Manager:		Date
FHWA Rep.:		Date
Environmental:		Date
Other (specify):		Date
Other (specify):		Date
District Prior Approval By:		Date
HQ (Issue Approve) By:		Date
Resident Engineer's Signature:		Date 6/1/09

ESTIMATE OF COST

	THIS REQUEST	TOTAL TO DATE
ITEMS	$0.00	$0.00
FORCE ACCOUNT	$0.00	$0.00
AGREED PRICE	$0.00	$0.00
ADJUSTMENT	$0.00	$0.00
TOTAL	$0.00	$0.00

FEDERAL PARTICIPATION

☐ PARTICIPATING ☐ PARTICIPATING IN PART ☑ NONE
☐ NON-PARTICIPATING (MAINTENANCE) ☐ NON-PARTICIPATING

FEDERAL SEGREGATION (if more than one Funding Source or P.I.P. type)
☑ CCO FUNDED PER CONTRACT ☐ CCO FUNDED AS FOLLOWS

FEDERAL FUNDING SOURCE	PERCENT

ADA Notice: For individuals with sensory disabilities, this document is available in alternate formats. For information call: (916) 654-6410 or TDD (916) 654-3880 or write Records and Forms Management, 1120 N Street, MS-89, Sacramento, CA 95814.

CONTRACT CHANGE ORDER

Change Requested by: Engineer

CCO 113 **Suppl. No.** 0 **Contract No.** 04 - 0120L4 **Road** ALA-80-1.6/2.7 **FED. AID LOC.:** NO FED AID

To: **M C M CONSTRUCTION INC**

You are directed to make the following changes from the plans and specifications or do the following described work not included in the plans and specifications for this contract. ***NOTE: This change order is not effective until approved by the Engineer.***

Description of work to be done, estimate of quantities and prices to be paid. (Segregate between additional work at contract price, agreed price and force account.) Unless otherwise stated, rates for rental of equipment cover only such time as equipment is actually used and no allowance will be made for idle time. This last percentage shown is the net accumulated increase or decrease from the original quantity in the Engineer's Estimate.

Provide labor, equipment, and materials as necessary to modify conduit routing and conduit racking details for Frame 1 of Bridge No. 34-0006R per sheets 2 of 20 through 20 of 20 of this CCO. All work shall be in accordance with Section 10-3, "Signals, Lighting and Electrical Systems," of the Special Provisions and Section 86, "Signals, Lighting and Electrical Systems," of the Standard Specification.

Extra Work at Force Account:

Grout conduit block outs per Note 4 on revised sheets 431R1 and 432R1 as shown on sheets 4 of 20 and 5 of 20 of this CCO.

Install warning signs per Sheet Note 8 on revised sheet 431R1 and Sheet Note 9 on revised sheets 432R1 and 433R1 as shown on sheets 4 of 20, 5 of 20, and 6 of 20 of this CCO.

Estimated cost of Extra Work at Force Account $25,000.00

Extra Work at Lump Sum:

Modify conduit routing and racking details for Frame 1 of Bridge No. 34-0006R per sheets 2 of 20 through 20 of 20 of this CCO. For this work, the contractor will be paid the sum of $261,250.00. This sum constitutes full compensation, including markups, for this change.

Extra Work at Agreed Lump Sum $236,250.00

Consideration of a time adjustment will be deferred until completion of the work specified herein. Determination of a commensurate time extension will be made in accordance with Section 10-1.14, "Progress Schedule (Critical Path Method)," of the Special Provisions and Section 8-1.07, "Liquidated Damages," of the Standard Specifications.

Estimated Cost: **Increase** ☑ **Decrease** ☐ **$261,250.00**

By reason of this order the time of completion will be adjusted as follows: Deferred

Signature	**Resident Engineer** BEN GHAFGHAZI	**Date** 8/25/09
Signature	**Construction Manager** Amer Bata	**Date** 8/25/09
Signature	**Construction Manager** Amer Bata	**Date** 9/30/09

We the undersigned contractor, have given careful consideration to the change proposed and agree, if this proposal is approved, that we will provide all equipment, furnish the materials, except as may otherwise be noted above, and perform all services necessary for the work above specified, and will accept as full payment therefor the prices shown above.

NOTE: If you, the contractor, do not sign acceptance of this order, your attention is directed to the requirements of the specifications as to proceeding with the ordered work and filing a written protest within the time therein specified.

Contractor accepts this by

Signature	**(Print name and title)** EDMUNDO A. PUCHI, TREASURER	**Date** 9/18/09

DIST	COUNTY	ROUTE	KILOMETER POST TOTAL PROJECT	SHEET No	TOTAL SHEETS
04	Ala	80	1.6/2.7	422 R1	643

REGISTERED ELECTRICAL ENGINEER 05/15/06 DATE

1-29-07
PLANS APPROVAL DATE

REGISTERED PROFESSIONAL ENGINEER JENS ERLINGSSON No. 8249 Exp. 9/30/08 ELECTRICAL STATE OF CALIFORNIA

PB POWER, Inc.
A Parsons Brinckerhoff Company
303 Second St., Suite 700N
San Francisco, CA 94107-1317

The State of California or its officers or agents shall not be responsible for the accuracy or completeness of electronic copies of this plan sheet.

Caltrans now has a web site! To get to the web site, go to http://www.dot.ca.gov

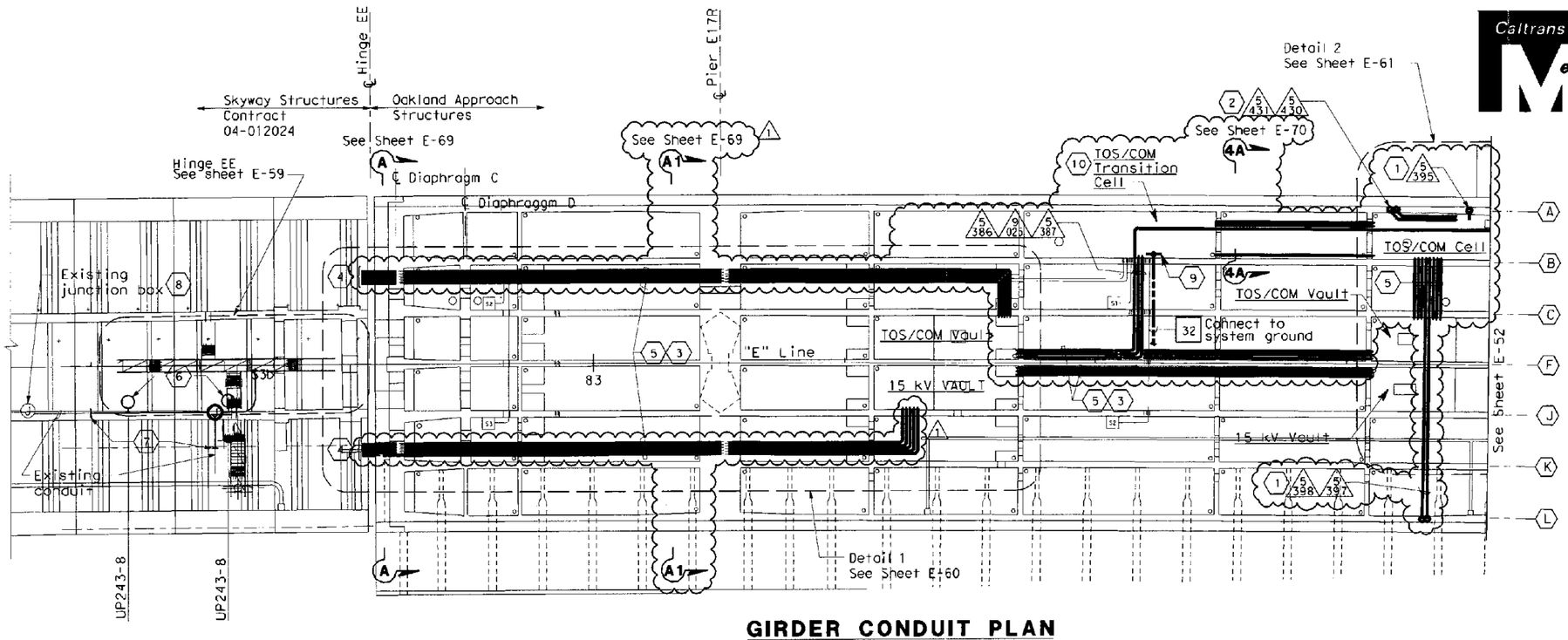

GIRDER CONDUIT PLAN

(FRAME 1)

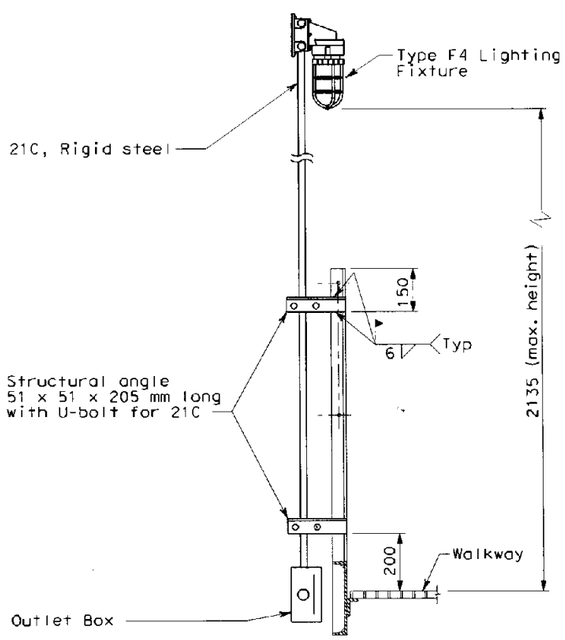

GIRDER WALKWAY LIGHTING STANCHION MOUNTED

SCALE: 1:10

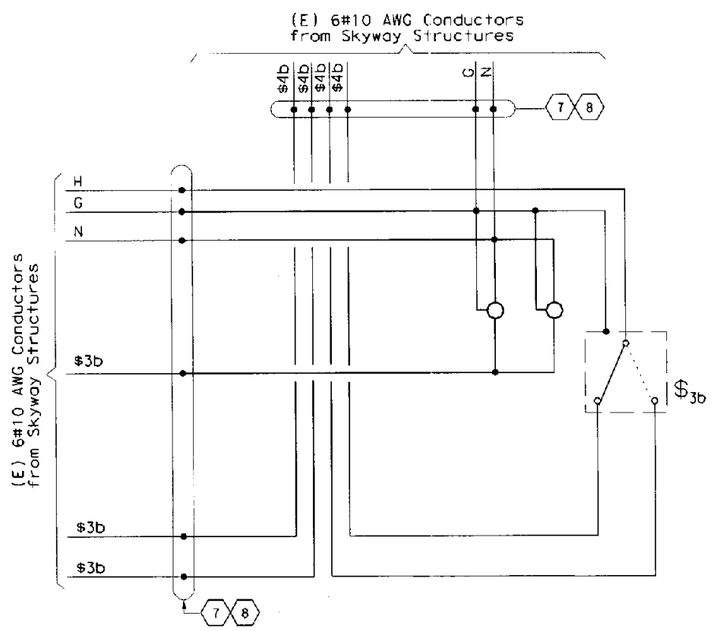

PARTIAL WIRING DIAGRAM UP-243-8

(NO SCALE)

SHEET NOTES:

1. Conduit up to PB-LTG and PB-COM located in barrier, see sheet E-49.
2. Conduit up to Ltg. Pole with CCTV-E03. See sheet E-72.
3. Conduit elbows shall be 610 mm minimum radius.
4. Connect conduits to Skyway Structures, See sheet E-59.
5. For conduit numbers, see sheets E-60 & E-61.
6. Lighting fixture type F4. Compact fluorescent, non-metallic vaportight housing with guard and clear glass globe, U.L. listed for wet and marine environment, 120 VAC, high frequency ballast and (1) 32 watt CFM32/GX24Q lamp. Stanchion mounting, see detail.
7. The Contractor shall intercept existing conduit and extend existing circuit/ conductors as shown on partial wiring diagram.
8. Splice conductors inside existing junction box.
9. See Detail 1, refer to sheet E-75.
10. Conduit ends shall be provided with ground bushing. Bond all conduits with #2 AWG bare copper wire connected to the ground bar.

NOTES:

1. References:
   - TOS equipment is shown for conduit routing only. For typical details of TOS controller and devices, see sheets starting at E-204.
   - For overall grounding plan, see sheet E-74.
   - For conduit and cable tray schedules, see sheets starting at E-224.
   - For conduit support, see sheets E-65 thru E-68.
2. Install conduits only.

REGISTERED PROFESSIONAL ENGINEER FADI WALIEDDINE No. 11465 Exp. 12/31/2009 ELECTRICAL STATE OF CALIFORNIA

MARK	DATE	DESCRIPTIONS	REV	CK	CCO No.
1	5/29/09	Revised location of conduits and sheet notes 3. Added sheet notes 9, 10, conduits 5-387, 5-395, 5-397 and 5-398, system ground connection at TOS/COM transition cell.	EJL	FSW	113

REVISIONS

CONTRACT CHANGE ORDER NO. 113
SHEET 2 OF 20 7/9/09

ROADWAY AND GIRDER LEVEL EASTBOUND (LIGHTING AND ELECTRICAL SYSTEMS)

SCALE: 1:200

E-51

THIS PLAN IS ACCURATE FOR ELECTRICAL WORK ONLY.

STATE OF CALIFORNIA - DEPARTMENT OF TRANSPORTATION
Caltrans

DESIGN OVERSIGHT: BEHZAD GOLEMOHAMMADI

CALCULATED/ DESIGNED BY	FK	DATE 2/06	REVISED BY
CHECKED BY	AB	2/06	DATE REVISED

FOR REDUCED PLANS ORIGINAL SCALE IS IN MILLIMETERS 0 20 40 60 80

DGN FILE =>T:\13103\WS\pse\OTD-Contract 1\CCO\Electrical\CCO-113 EB Conduit Rack\40120lua051r.dgn
USERNAME =>rigafrente
CU 04251 EA 0120L1

LAST REVISION 00-00-00
DATE PLOTTED => 5/28/2009
TIME PLOTTED => 2:57:50 PM

DIST	COUNTY	ROUTE	KILOMETER POST TOTAL PROJECT	SHEET No	TOTAL SHEETS
04	Ala	80	1.6/2.7	423 R1	643

REGISTERED ELECTRICAL ENGINEER 05/15/06 DATE

1-29-07
PLANS APPROVAL DATE

REGISTERED PROFESSIONAL ENGINEER JENS ERLINGSSON No. 8249 Exp. 9/30/08 ELECTRICAL STATE OF CALIFORNIA

PB POWER, Inc.
A Parsons Brinckerhoff Company
303 Second St., Suite 700N
San Francisco, CA 94107-1317

The State of California or its officers or agents shall not be responsible for the accuracy or completeness of electronic copies of this plan sheet.

Caltrans now has a web site! To get to the web site, go to http://www.dot.ca.gov

Caltrans Metric

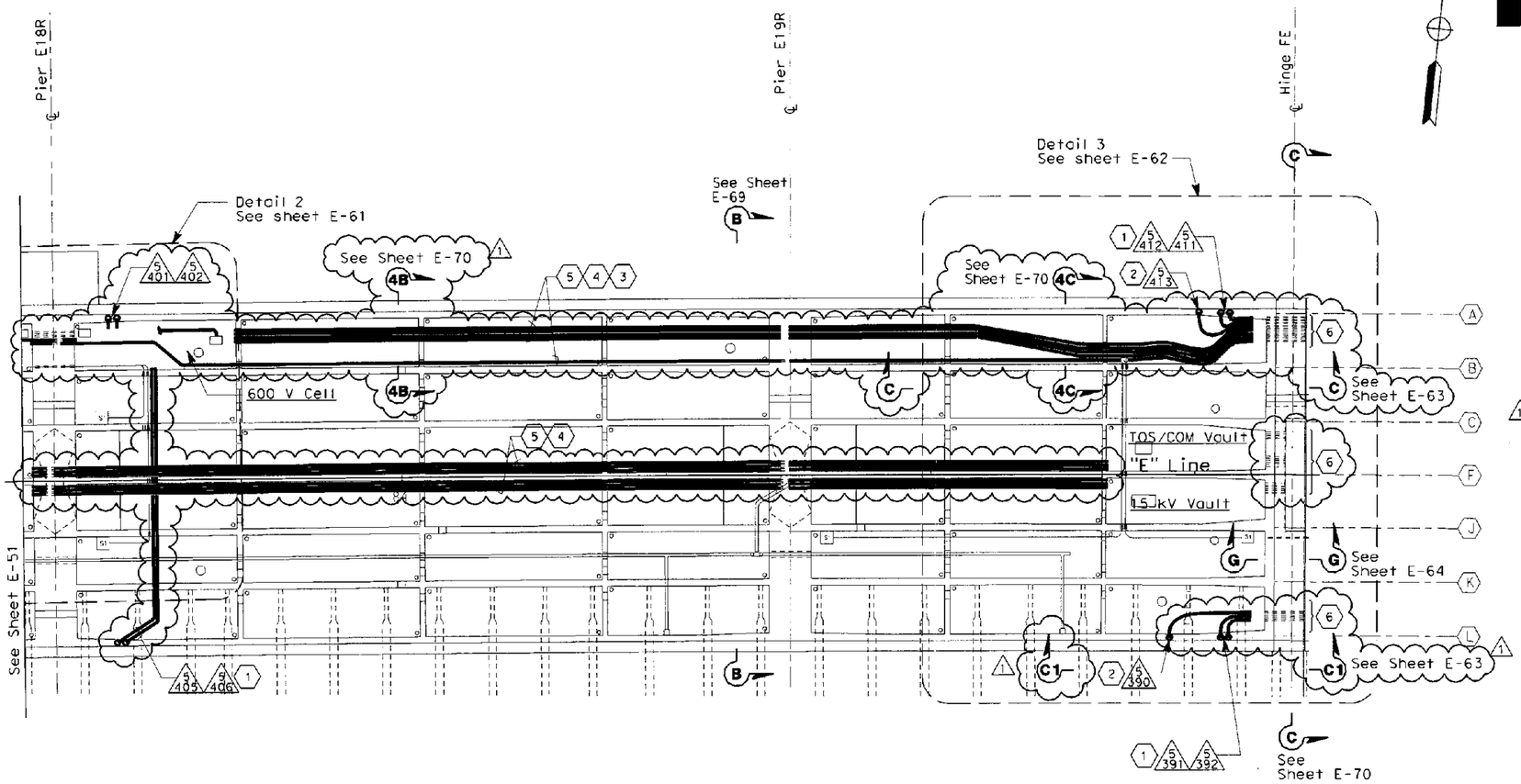

SHEET NOTES:

1. Conduit up to PB-LTG located in barrier, see sheet E-50.
2. Conduit up to PB-COM located in barrier, see sheet E-50.
3. Conduit elbows shall be 610 mm minimum radius. △1
4. For conduits Nos., see sheet E-62.
5. For conduit Nos., see sheet E-61.
6. Coordinate installation of pipe sleeves with hinge FE Structural details. △1

NOTES:

1. References:
   - TOS equipment is shown for conduit routing only. For typical details of TOS controller and devices, see sheets starting at E-204.
   - For overall grounding plan, see sheet E-74.
   - For conduit and cable tray schedules, see sheets starting at E-224.
   - For conduit support, see sheets E-65 thru E-68.
2. Install conduits only.

GIRDER CONDUIT PLAN
(FRAME 1)

REGISTERED PROFESSIONAL ENGINEER FADI WALIEDDINE No. 11465 Exp. 12/31/2009 ELECTRICAL STATE OF CALIFORNIA △1

MARK	DATE	DESCRIPTIONS	REV	CK	CCO No.
△1	5/29/09	Revised location of conduits and sheet notes 3. Added sheet note 6 and Section C1 - C1.	EJL	FSW	113

REVISIONS

CONTRACT CHANGE ORDER NO. 113
SHEET 3 OF 20 7/9/09

ROADWAY AND GIRDER LEVEL EASTBOUND
(LIGHTING AND ELECTRICAL SYSTEMS)
SCALE: 1:200

E-52

THIS PLAN IS ACCURATE FOR ELECTRICAL WORK ONLY.

STATE OF CALIFORNIA - DEPARTMENT OF TRANSPORTATION	DESIGN OVERSIGHT	CALCULATED/DESIGNED BY FK	DATE 2/06 REVISED BY
Caltrans	BEHZAD GOLEMOHAMMADI	CHECKED BY AB	2/06 DATE REVISED

FOR REDUCED PLANS ORIGINAL SCALE IS IN MILLIMETERS 0 20 40 60 80

DGN FILE =>T:\13103\MS\pse\OTO-Contract 1\CCO\Electrical\CCO-113 EB Conduit Rock\40120ua052r1.dgn
USERNAME =>ricafrente
CU 04251
EA 0120L1

LAST REVISION 00-00-00 DATE PLOTTED => 5/29/2009 TIME PLOTTED => 21:58:09 PM

DIST	COUNTY	ROUTE	KILOMETER POST TOTAL PROJECT	SHEET No	TOTAL SHEETS
04	Ala	80	1.6/2.7	431 R1	643

REGISTERED ELECTRICAL ENGINEER 05/15/06 DATE

1-29-07
PLANS APPROVAL DATE

REGISTERED PROFESSIONAL ENGINEER JENS ERLINGSSON No. 8249 Exp. 9/30/08 ELECTRICAL STATE OF CALIFORNIA

PB POWER, inc.
A Parsons Brinckerhoff Company
303 Second St., Suite 700N
San Francisco, CA 94107-1317

The State of California or its officers or agents shall not be responsible for the accuracy or completeness of electronic copies of this plan sheet.

Caltrans now has a web site! To get to the web site, go to http://www.dot.ca.gov

NOTES:

1. References:
   - TOS equipment is shown for conduit routing only. For typical details of TOS controller and devices see sheets starting at E-204.
   - For overall grounding plan, see sheet E-74.
   - For conduit and cable tray schedules, see sheets starting at E-224.
2. For overall plan of this area, see sheet E-51.
3. ~~(*) Dimensions to be provided by structural.~~ Deleted 1
4. Once the conduits are installed on the TOS/COM and 15 kV vaults, Contractor to grout the conduit block outs.
5. Refer to sheets E-65 and E-66 for conduit support location. Refer to E-67 and E-68 for conduit support details.

SHEET NOTES:

1. Coordinate installation of conduits with Hinge EE Structural details. Connect to existing conduits. 1
2. ~~Refer to sheets E-65 and E-66 for conduit support location. Refer to E-67 and E-68 for conduit support details.~~
3. See sheet E-51 for continuation.
4. See Detail 1. Refer to sheet E-75.
5. The segment of conduit through the hinge to this point, 800 mm beyond face of diaphragm, shall be installed first according to the structural construction sequence. Continuation of the conduits from this interface point shall be made using threaded conduit couplings.
6. Provided with pipe sleeves for conduits.
7. Conduits are provided with pipe sleeves. The Contractor shall ensure that conduits inside the pipe sleeve are solidly secured or anchored at this location. 1
8. The Contractor to provide non-removable warning sign above or before the girder access opening. The sign shall read "Caution - Authorized Personnel Only. Electricals Inside".
9. Conduit end shall be provided with ground bushing. Bond all conduits with #2 AWG bare copper wire, connected to the ground bar.
10. The system ground, #500 kcMIL shall be routed along the 15 kV conduit run or conduit as shown, anchored at each location of the conduit support rack.
11. Conduits for Strong Motion Detection System, see sheet E-174. 1

Caltrans Metric

REGISTERED PROFESSIONAL ENGINEER FADI WALIEDDINE No. 11465 Exp. 12/31/2009 ELECTRICAL STATE OF CALIFORNIA

MARK	DATE	DESCRIPTIONS	REV	CK	CCO No.
1	5/29/09	Revised location of conduits. Added pipe sleeves, sheet notes 6, 7, 8, 9, 10, 11, notes 4, 5, conduits 5-387, sheet notes 1 and notes 3. Deleted sheet notes 2.	EJL	FSW	113

REVISIONS

CONTRACT CHANGE ORDER NO. 113
SHEET 4 OF 20 7/8/09

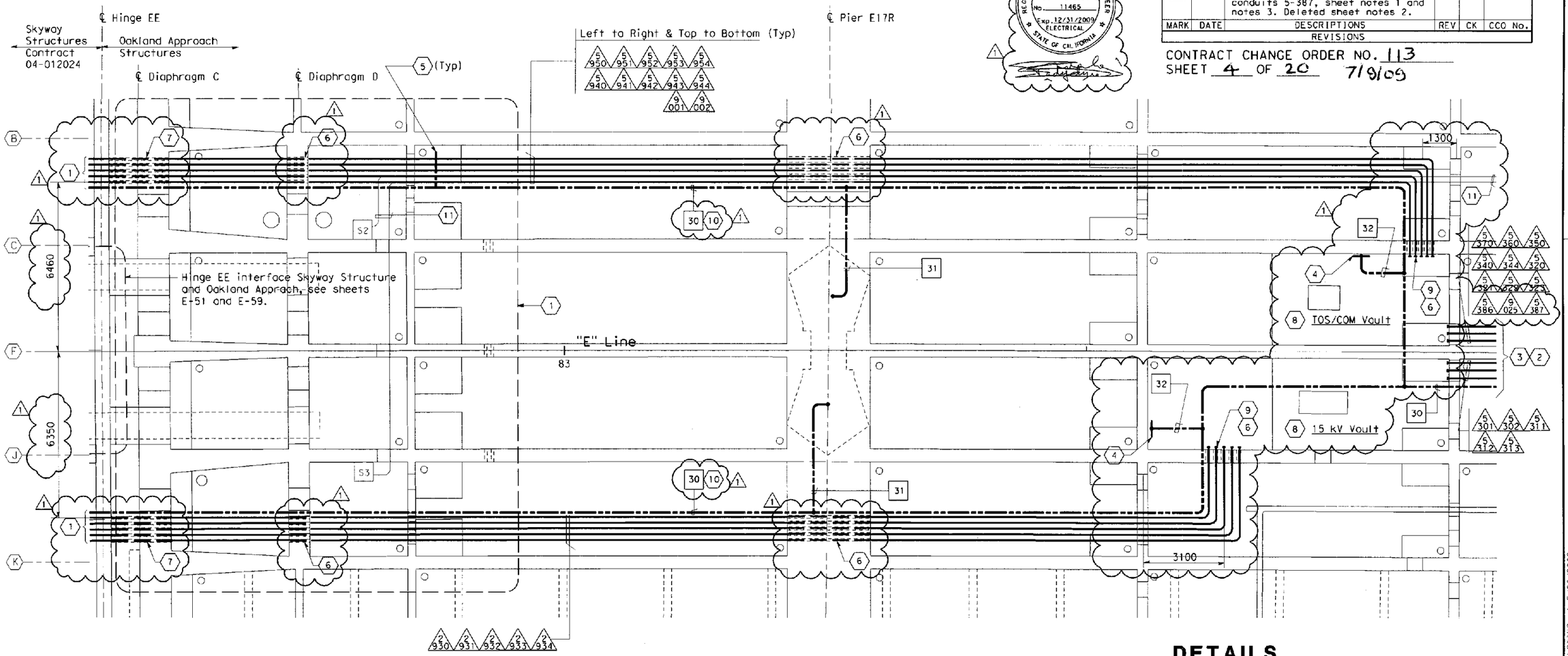

DETAIL 1
HINGE EE AND PIER E17R
SCALE: 1:75

DETAILS
ROADWAY AND GIRDER LEVEL EASTBOUND GIRDER CONDUIT INSTALLATION
SCALE AS NOTED

THIS PLAN ACCURATE FOR ELECTRICAL WORK ONLY.

E-60

CALCULATED/ DESIGNED BY	FK	DATE 2/06	REVISED BY	DATE REVISED
CHECKED BY	AB	2/06		

DESIGN OVERSIGHT
BEHZAD GOLEMOHAMMADI

STATE OF CALIFORNIA - DEPARTMENT OF TRANSPORTATION
Caltrans

LAST REVISION 00-00-00 DATE PLOTTED => 5/28/2009 TIME PLOTTED => 2:59:38 PM

FOR REDUCED PLANS ORIGINAL SCALE IS IN MILLIMETERS 0 20 40 60 80

DGN FILE =>T:\13103\MS\pse\OTD-Contract 1\CCO\Electrical\CCO-113 E3 Conduit Rack\40120tua060r1.dgn
USERNAME =>ricafrente

CU 04251 EA 0120L1

DIST	COUNTY	ROUTE	KILOMETER POST TOTAL PROJECT	SHEET NO	TOTAL SHEETS
04	Ala	80	1.6/2.7	432 RT	643

REGISTERED ELECTRICAL ENGINEER 05/15/06 DATE

1-29-07
PLANS APPROVAL DATE

REGISTERED PROFESSIONAL ENGINEER JENS ERLINGSSON No. 8249 Exp. 9/30/08 ELECTRICAL STATE OF CALIFORNIA

PB POWER, Inc.
A Parsons Brinckerhoff Company
303 Second St., Suite 700N
San Francisco, CA 94107-1317

The State of California or its officers or agents shall not be responsible for the accuracy or completeness of electronic copies of this plan sheet.

Caltrans now has a web site! To get to the web site, go to http://www.dot.ca.gov

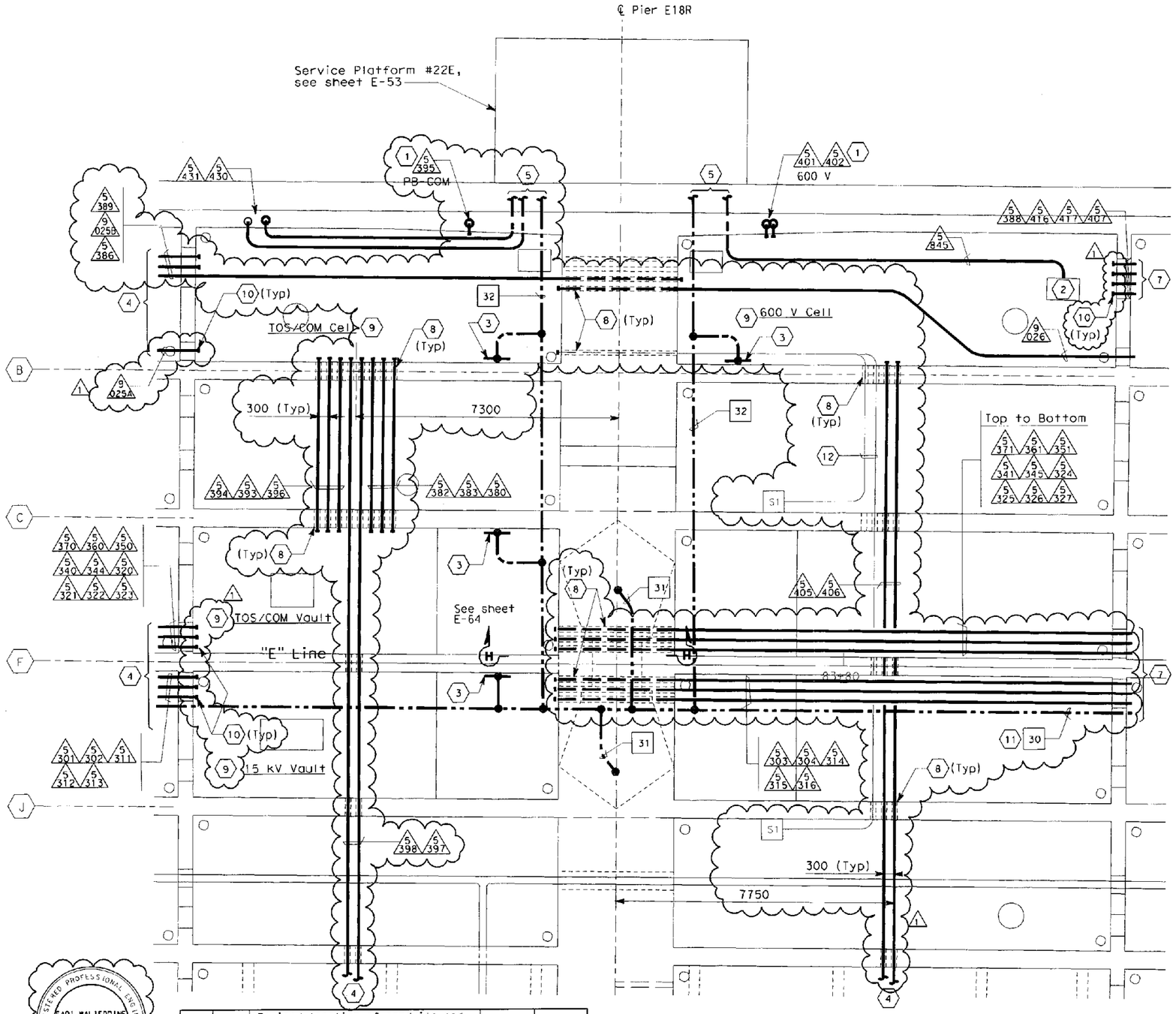

SHEET NOTES:

1. Conduit up to PB-LTG and PB-COM located in Barrier. See sheet E-49.
2. Preformed Loops PL-E09 Splicebox PB-4D. See E-44.
3. See Detail 1 on sheet E-75.
4. See sheet E-51 for continuation.
5. For continuation, see sheet E-53.
6. ~~Refer to sheets E-65 and E-66 for conduit support location. Refer to E-67 & E-68 for conduit support details.~~
7. See sheet E-52 for continuation.
8. Provided with pipe sleeves for conduits.
9. The Contractor to provide non-removable warning sign above or before the girder access opening. The sign shall read "Caution - Authorized Personnel Only. Electricals Inside".
10. Conduit end shall be provided with ground bushing. Bond all conduits with #2 AWG bare copper wire, connected to the ground bar, see Detail 1, sheet E-75.
11. The system ground, #500 kcMIL shall be routed along the 15 kV conduit run or conduit as shown, anchored at each location of the conduit support rack.
12. Conduits for Strong Motion Detection System, see sheet E-175.

NOTES:

1. References:
   - TOS equipment is shown for conduit routing only, for typical details of TOS controller and devices see sheets starting at E-204.
   - For overall grounding plan, see sheet E-74.
   - For conduit and cable tray schedules, see sheets starting at E-224.
2. ~~(x) Dimensions to be provided by structural.~~ Deleted.
3. For overall plan of this area, see sheets E-51 and E-52.
4. Once the conduits are installed on the TOS/COM, 15 kV vaults, 600 V and TOS/COM cells, Contractor to grout the conduit block outs.
5. Refer to sheets E-65 and E-66 for conduit support location. Refer to E-67 and E-68 for conduit support details.

REGISTERED PROFESSIONAL ENGINEER FADI WALIEDDINE No. 11465 Exp. 12/31/2009 ELECTRICAL STATE OF CALIFORNIA

MARK	DATE	DESCRIPTIONS	REV	CK	CCO No.
1	5/29/09	Revised location of conduits and sheet notes 1. Added pipe sleeves, conduits 5-389, 5-397, 5-398 and 9-025A, 9-025B, sheet notes 8, 9, 10, 11, 12, notes 4 and 5. Deleted sheet notes 6 and notes 2.	EJL	FSW	113

REVISIONS

CONTRACT CHANGE ORDER NO. 113
SHEET 5 OF 20 7/9/09

DETAIL 2
PIER E18R CONDUIT PLAN

DETAILS
ROADWAY AND GIRDER LEVEL EASTBOUND GIRDER CONDUIT INSTALLATION
SCALE: 1:60

E-61

CALCULATED/ DESIGNED BY	FK	DATE 2/06	REVISED BY
CHECKED BY	AB	2/06	DATE REVISED

DESIGN OVERSIGHT
BEHZAD GOLEMOHAMMADI

STATE OF CALIFORNIA - DEPARTMENT OF TRANSPORTATION
Caltrans

DATE PLOTTED => 5/28/2009
TIME PLOTTED => 3:00:10 PM

LAST REVISION 00-00-00

FOR REDUCED PLANS ORIGINAL SCALE IS IN MILLIMETERS 0 20 40 60 80

DGN FILE =>T:\13103\MS\pse\CTD-Contract 1\CCO\Electrical\CCO-113 E3 Conduit Rack\40120lua061r1.dgn
USERNAME =>ricafrente

CU 04251 EA 0120L1

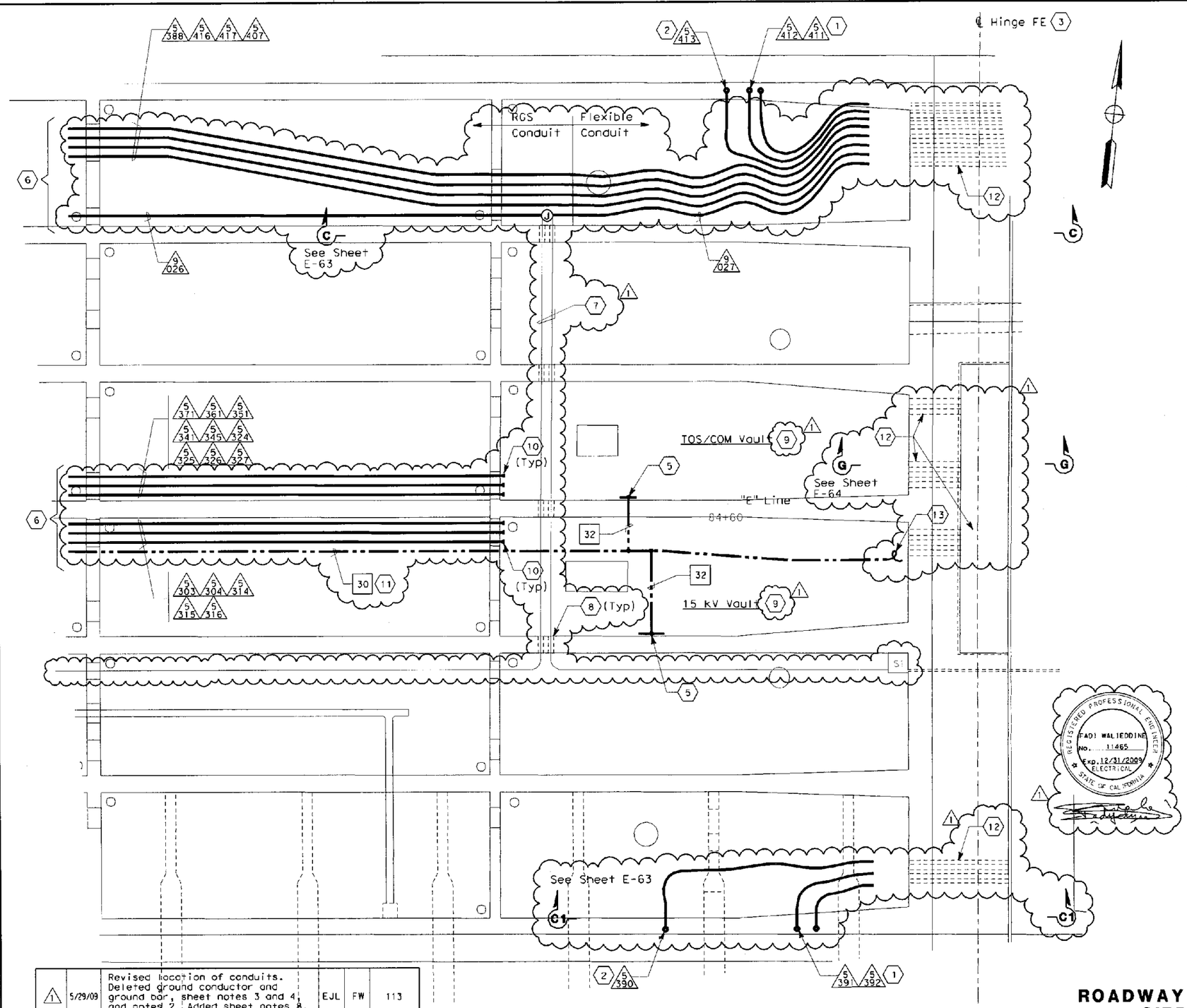

MARK	DATE	DESCRIPTIONS	REV	CK	CCO No.
1	5/29/09	Revised location of conduits. Deleted ground conductor and ground bar, sheet notes 3 and 4, and notes 2. Added sheet notes 8, 9, 10, 11, 12, 13 and notes 4.	EJL	FW	113

REVISIONS

CONTRACT CHANGE ORDER NO. 113
SHEET 6 OF 20 7/9/09

DETAIL 3
HINGE FE

DIST	COUNTY	ROUTE	KILOMETER POST TOTAL PROJECT	S-FET No	TOTAL SHEETS
04	Ala	80	1.6/2.7	433 R1	643

REGISTERED ELECTRICAL ENGINEER 05/15/06 DATE

1-29-07
PLANS APPROVAL DATE

REGISTERED PROFESSIONAL ENGINEER JENS ERLINGSSON No. 8249 Exp. 9/30/08 ELECTRICAL STATE OF CALIFORNIA

PB POWER, Inc.
A Parsons Brinckerhoff Company
303 Second St., Suite 700N
San Francisco, CA 94107-1317

The State of California or its officers or agents shall not be responsible for the accuracy or completeness of electronic copies of this plan sheet.

Caltrans now has a web site! To get to the web site, go to http://www.dot.ca.gov

Caltrans Metric

SHEET NOTES:

1. Conduit up to PB-LTC located in Barrier. See sheet E-50.
2. Conduit up to PB-COM located in Barrier. See sheet E-50.
3. ~~For Hinge FE conduit installation, see sheets E-63 and E-64.~~
4. ~~Refer to sheets E-65 and E-66 for conduit support location. Refer to sheets E-67 and E-68 for conduit support details.~~
5. See Detail 1. Refer to sheet E-75.
6. See sheet E-52.
7. Conduits for Strong Motion Detection System, see sheet E-176.
8. Provided with pipe sleeves for conduits.
9. The Contractor to provide non-removable warning sign above or before the girder access opening. The sign shall read "Caution - Authorized Personnel Only. Electricals Inside".
10. Conduit end shall be provided with ground bushing. Bond all conduits with #2 AWG bare bopper wire, connected to the ground bar.
11. The system ground, #500 kcMIL shall be routed along the 15 kV conduit run or conduit as shown, anchored at each location of the conduit rack.
12. The installation of the metallic pipe sleeve shall be aligned straight and parallel to structure. The pipe sleeve shall be used for a rigid steel conduit to pass through, and shall be install by others.
13. Coil 5000 long of ground conductor. For connection by others.

NOTES:

1. References:
   - TOS equipment is shown for conduit routing only. For typical details of TOS controller and devices, see sheets starting at E-204.
   - For overall grounding plan, see sheet E-74.
   - For conduit and cable tray schedules, see sheets starting at E-224
2. ~~(*) Dimensions to be provided by structural.~~
3. For overall plan of this area, see sheet E-52.
4. Refer to sheets E-65 and E-66 for conduit support location. Refer to to sheets E-67 and E-68 for conduit details.

REGISTERED PROFESSIONAL ENGINEER FADI WALIEDDINE No. 11465 Exp. 12/31/2009 ELECTRICAL STATE OF CALIFORNIA

DETAILS
ROADWAY AND GIRDER LEVEL EASTBOUND GIRDER CONDUIT INSTALLATION
SCALE: 1:60

E-62

STATE OF CALIFORNIA - DEPARTMENT OF TRANSPORTATION
Caltrans

DESIGN OVERSIGHT
BEHZAD GOLEMOHAMMADI

CALCULATED/ DESIGNED BY	DATE	REVISED BY	DATE REVISED
CHECKED BY			
FK	2/06	AB	2/06

LAST REVISION 00-00-00
DATE PLOTTED => 5/28/2009
TIME PLOTTED => 3:01:23 PM

FOR REDUCED PLANS ORIGINAL SCALE IS IN MILLIMETERS 0 20 40 60 80

DGN FILE =>T:\13103\MS\pse\OTD-Contract 1\CCO\Electrical\CCO-113 EB Conduit Rack\40120lua062-1.dgn
USERNAME =>jicafrente

CU 04251 EA 0120L1

DIST	COUNTY	ROUTE	KILOMETER POST TOTAL PROJECT	SHEET NO	TOTAL SHEETS
04	Ala	80	1.6/2.7	434 R1	643

REGISTERED ELECTRICAL ENGINEER 05/15/06 DATE

1-29-07
PLANS APPROVAL DATE

REGISTERED PROFESSIONAL ENGINEER JENS ERLINGSSON No. 8249 Exp. 9/30/08 ELECTRICAL STATE OF CALIFORNIA

PB POWER, Inc.
A Parsons Brinckerhoff Company
303 Second St., Suite 700N
San Francisco, CA 94107-1317

The State of California or its officers or agents shall not be responsible for the accuracy or completeness of electronic copies of this plan sheet.

Caltrans now has a web site! To get to the web site, go to http://www.dot.ca.gov

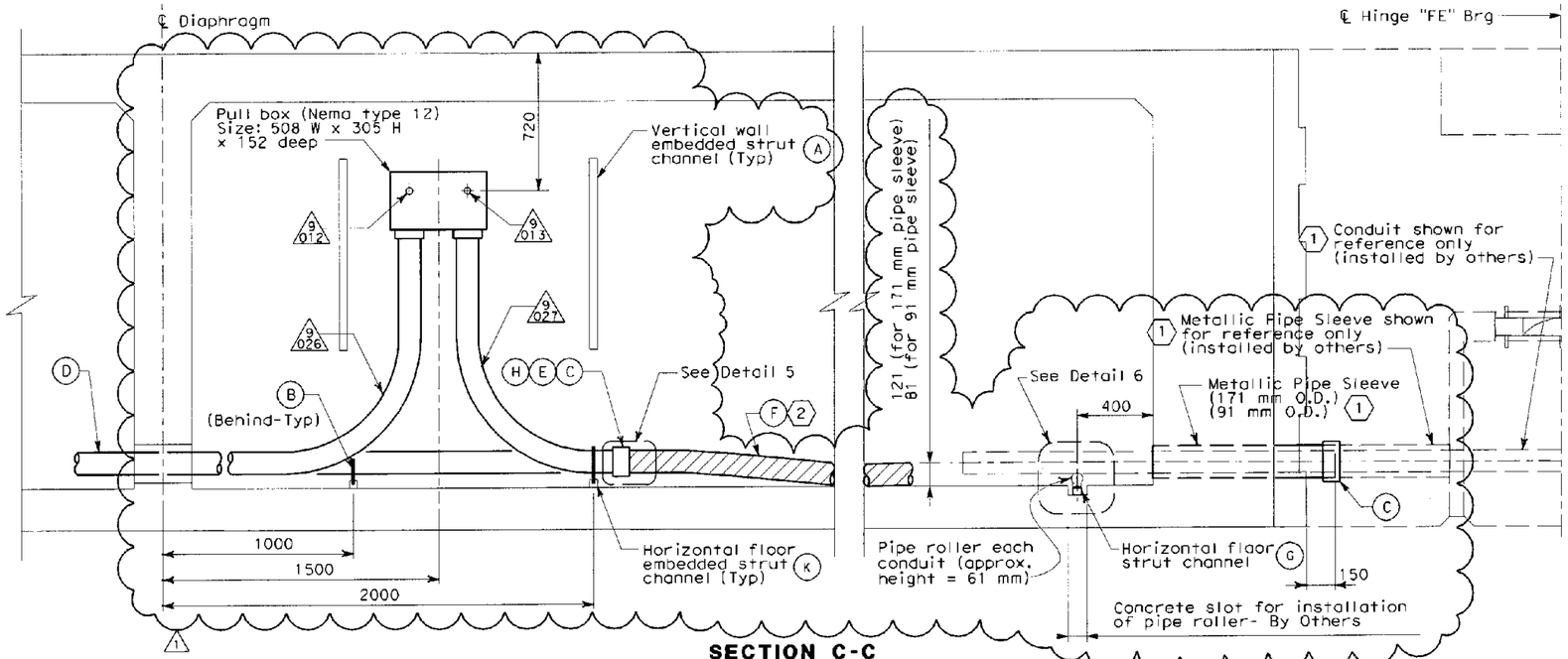

SECTION C-C
PIPE SLEEVE/CONDUIT THROUGH HINGE FE
SCALE 1:15

MATERIAL LIST

Item No.	Description	Remarks
A	Vertical wall embedded strut channel	See E-66.
B	U-Bolt, conduit clamp ~~for 103C~~	
C	Conduit coupling with plug	
D	Galvanized rigid conduit, ~~103C~~	Length as required
E	Connector, straight liquidtight flexible conduit ~~for 103C~~	
F	Liquidtight flexible metal conduit, ~~103C~~	2000 mm (Max)
G	42 mm Strut channel (Shown for reference only)	
H	Strain relief grips for flexible conduit, ~~103C~~	Required both ends
J	Pipe Rollers for 103 mm and 41 mm (Shown for reference only)	
K	Horizontal floor embedded strut channel	See E-66.

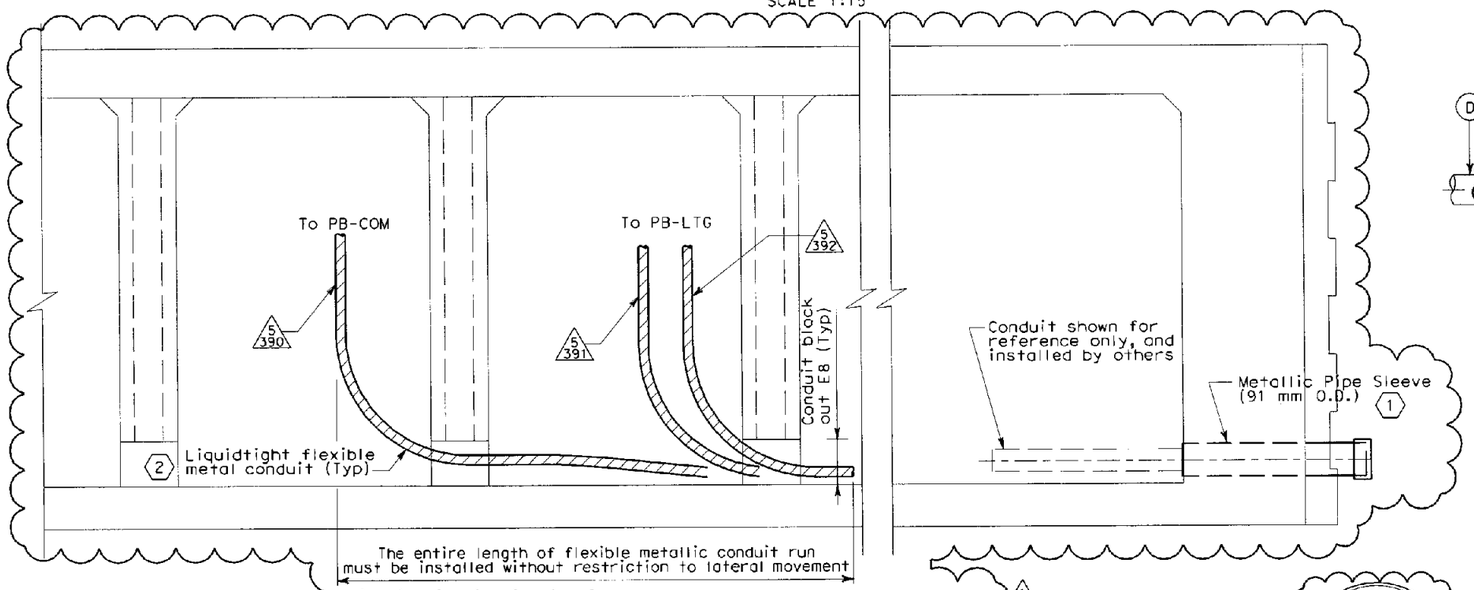

SECTION C1-C1
PIPE SLEEVE/CONDUIT AT GIRDER K/L
SCALE 1:15

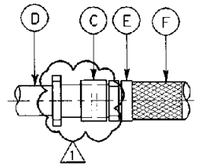

DETAIL 5
NO SCALE

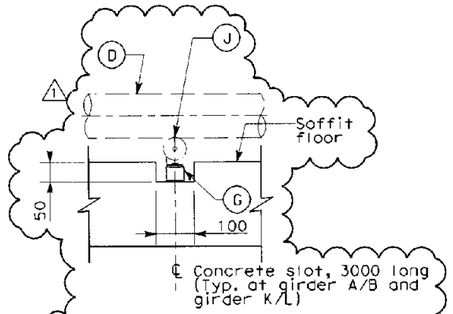

DETAIL 6
(SHOWN FOR REFERENCE ONLY)
NO SCALE

SHEET NOTES:

1. To ensure proper functionality of the electrical conduit seismic movement design, the installation of the pipe sleeves shall be aligned straight and parallel to both structures. The pipe sleeve shall be used for RGS conduit to pass thru as shown and installed by others.
2. Arrange the conduit and supports to allow the flexible metallic conduit the provision for minimum 520 mm horizontal movement. Flexible conduit may rest on vault floor.

NOTES:

1. ~~* Dimensions to be provided by Structural.~~ Deleted.
2. For hinge FE expansion joint displacement, details, sleeve location and dimensions, see Structures Eastbound Hinge FE detail sheets.

MARK	DATE	DESCRIPTIONS	REV	CK	CCO No.
1	5/29/09	Changed pipe sleeve type and Section C-C. Revised Detail 5, Material List, sheet notes 1. Added Detail 6. Deleted Section A-A.	EJL	FSW	113

REVISIONS

CONTRACT CHANGE ORDER NO. 113
SHEET 7 OF 20 7/9/09

REGISTERED PROFESSIONAL ENGINEER FADI WALIEDDINE No. 11465 Exp. 12/31/2009 ELECTRICAL STATE OF CALIFORNIA

DETAILS
ROADWAY AND GIRDER LEVEL EASTBOUND HINGE FE CONDUIT INSTALLATION
SCALE AS NOTED

ALL DIMENSIONS ARE IN MILLIMETERS UNLESS OTHERWISE SHOWN

THIS PLAN ACCURATE FOR ELECTRICAL WORK ONLY.

E-63

CALCULATED/ DESIGNED BY	FK	DATE 2/06	REVISED BY
CHECKED BY	AB	2/06	DATE REVISED

DESIGN OVERSIGHT
BEHZAD GOLEMOHAMMADI

STATE OF CALIFORNIA - DEPARTMENT OF TRANSPORTATION
Caltrans

FOR REDUCED PLANS ORIGINAL SCALE IS IN MILLIMETERS 0 20 40 60 80

DGN FILE =>T:\13103\MS\pse\OTO-Contract 1\CCO\Electrical\CCO-113 EB Conduit Rack\<0120lua063r1.dgn
USERNAME =>ricafrente

CU 04251 | EA 0120L1

ASE REVISION 00-00-00 | DATE PLOTTED => 5/28/2009 TIME PLOTTED => 3:02:02 PM

DIST	COUNTY	ROUTE	KILOMETER POST TOTAL PROJECT	SHEET NO	TOTAL SHEETS
04	Ala	80	1.6/2.7	435 R1	643

REGISTERED ELECTRICAL ENGINEER 05/15/06 DATE

1-29-07
PLANS APPROVAL DATE

REGISTERED PROFESSIONAL ENGINEER JENS ERLINGSSON No. 8249 Exp. 9/30/08 ELECTRICAL STATE OF CALIFORNIA

PB POWER, Inc.
A Parsons Brinckerhoff Company
303 Second St., Suite 700N
San Francisco, CA 94107-1317

The State of California or its officers or agents shall not be responsible for the accuracy or completeness of electronic copies of this plan sheet.

Caltrans now has a web site! To get to the web site, go to http://www.dot.ca.gov

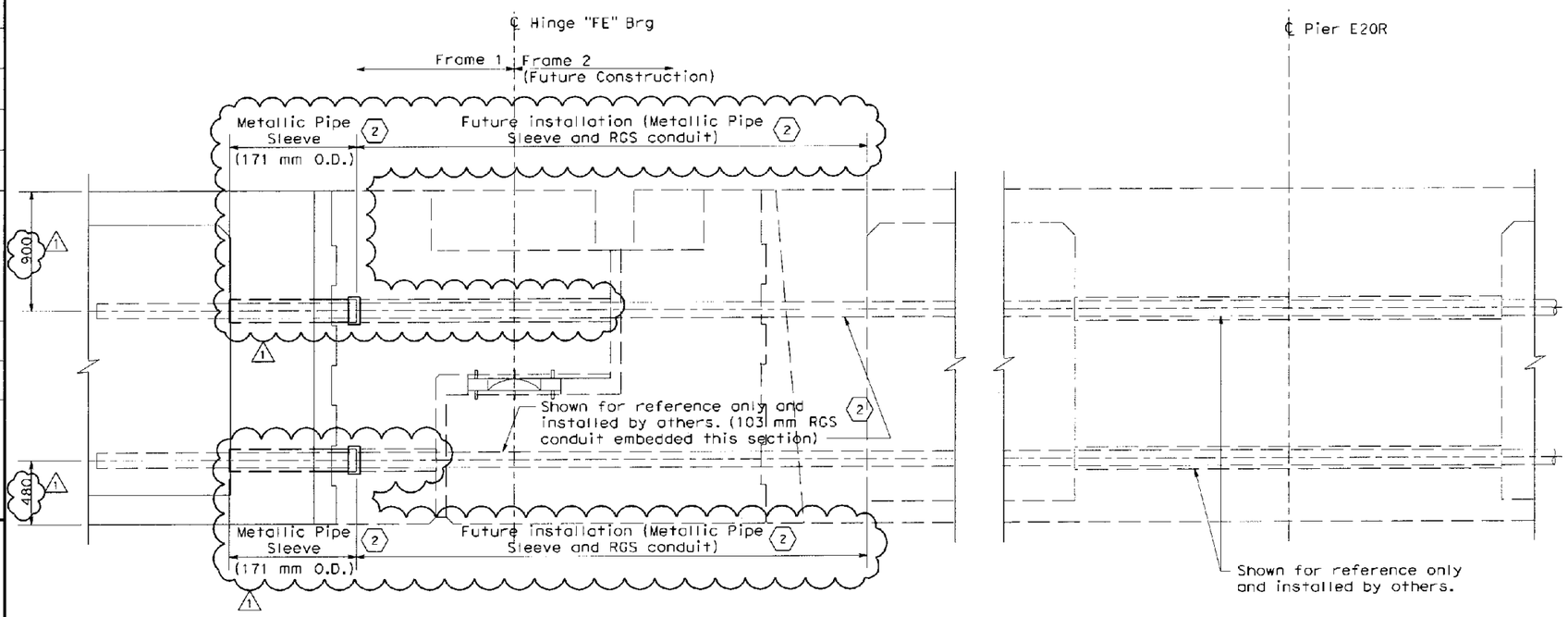

SECTION G-G

HINGE FE AND PIER E20R
CONDUIT INTERFACE
SCALE: 1:40

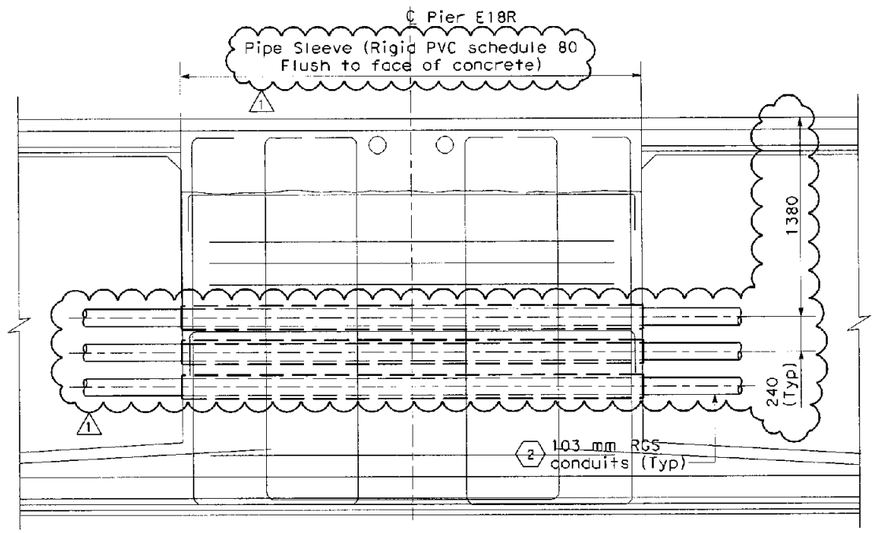

SECTION H-H
FOR PIER E18R

(SIMILAR FOR PIER E19L)
SCALE: 1:20

SHEET NOTES:

1. For conduit layout plan, refer to sheets E-51 and E-52.
2. To ensure proper functionality of the electrical conduit seismic movement design, ~~the installation of the pipe sleeves shall be aligned~~ straight and parallel to both structures. The pipe sleeve shall be used for RGS conduit to pass thru as shown and installed by others.

NOTES:

1. Reference:
   - For plan where section H-H is taken, see sheet E-61.

~~2. (*) Dimensions to be provided by Structural.~~ Deleted.

REGISTERED PROFESSIONAL ENGINEER FADI WALIEDDINE No. 11465 Exp. 12/31/2009 ELECTRICAL STATE OF CALIFORNIA

MARK	DATE	DESCRIPTIONS	REV	CK	CCO No.
1	5/29/09	Changed pipe sleeve type and Section G-G. Added pipe sleeve on Section H-H. Revised sheet notes 2 and notes 2.	EJL	FSW	113

REVISIONS

CONTRACT CHANGE ORDER NO. 113
SHEET 8 OF 20 7/9/09

DETAILS
ROADWAY AND GIRDER LEVEL EASTBOUND GIRDER CONDUIT INSTALLATION

SCALE: AS NOTED

E-64

CALCULATED/ DESIGNED BY	DATE	REVISED BY	DATE REVISED
FK	2/06		
CHECKED BY			
AB	2/06		

DESIGN OVERSIGHT
BEHZAD GOLEMOHAMMADI

STATE OF CALIFORNIA - DEPARTMENT OF TRANSPORTATION
Caltrans

THIS PLAN ACCURATE FOR ELECTRICAL WORK ONLY.

ALL DIMENSIONS ARE IN MILLIMETERS UNLESS OTHERWISE SHOWN

FOR REDUCED PLANS ORIGINAL SCALE IS IN MILLIMETERS 0 20 40 60 80

DGN FILE =>T:\13103\MS\pse\OTD-Contract 1\CCO\Electrical\CCO-113 ED Conduit Rack\40120lua064r1.dgn
USERNAME =>ricafrente

CU 04251 EA 0120L1

LAST REVISION 00-00-00 DATE PLOTTED => 5/28/2009 TIME PLOTTED => 3:02:38 PM

DIST	COUNTY	ROUTE	KILOMETER POST TOTAL PROJECT	SHEET No	TOTAL SHEETS
04	Ala	80	1.6/2.7	436 R1	643

05/15/06
REGISTERED ELECTRICAL ENGINEER DATE

1-29-07
PLANS APPROVAL DATE

REGISTERED PROFESSIONAL ENGINEER JENS ERLINGSSON No. 8249 Exp. 9/30/08 ELECTRICAL STATE OF CALIFORNIA

PB POWER, Inc.
A Parsons Brinckerhoff Company
303 Second St., Suite 703N
San Francisco, CA 94107-317

The State of California or its officers or agents shall not be responsible for the accuracy or completeness of electronic copies of this plan sheet.

Caltrans now has a web site! To get to the web site, go to http://www.dot.ca.gov

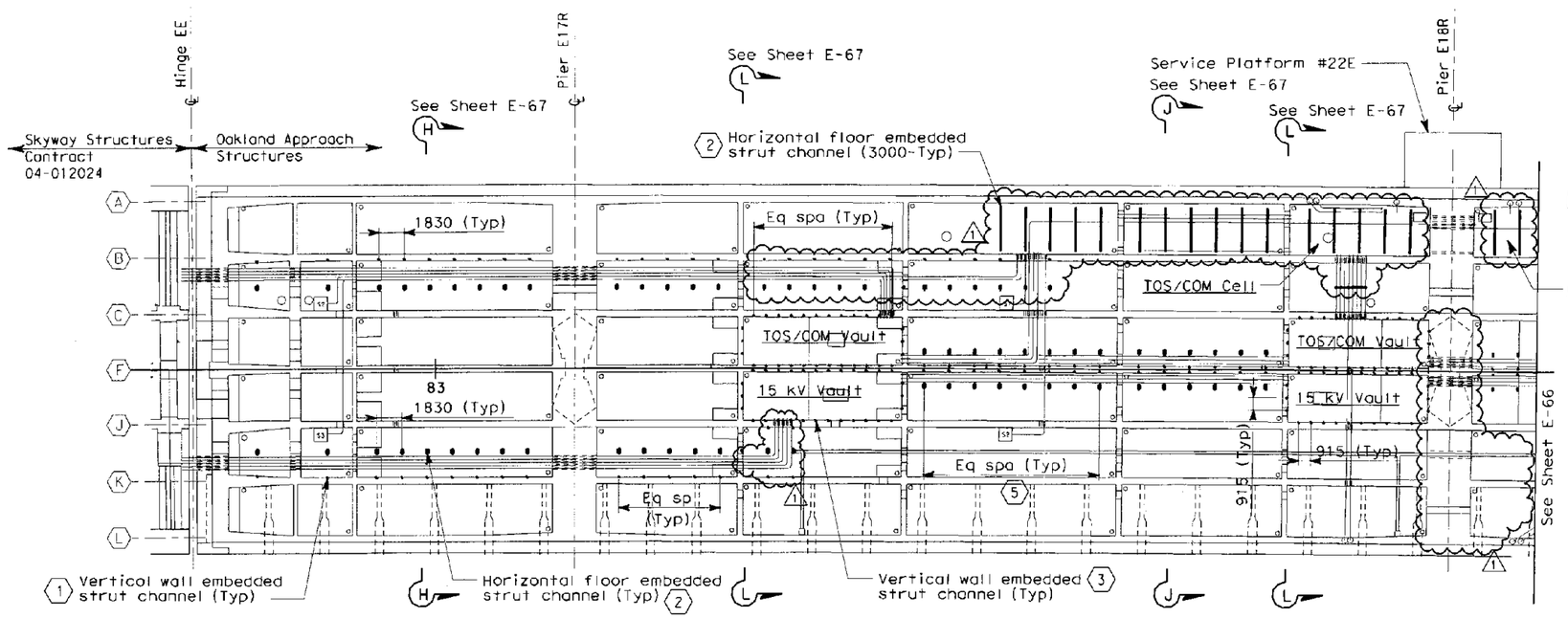

GIRDER CONDUIT SUPPORT PLAN

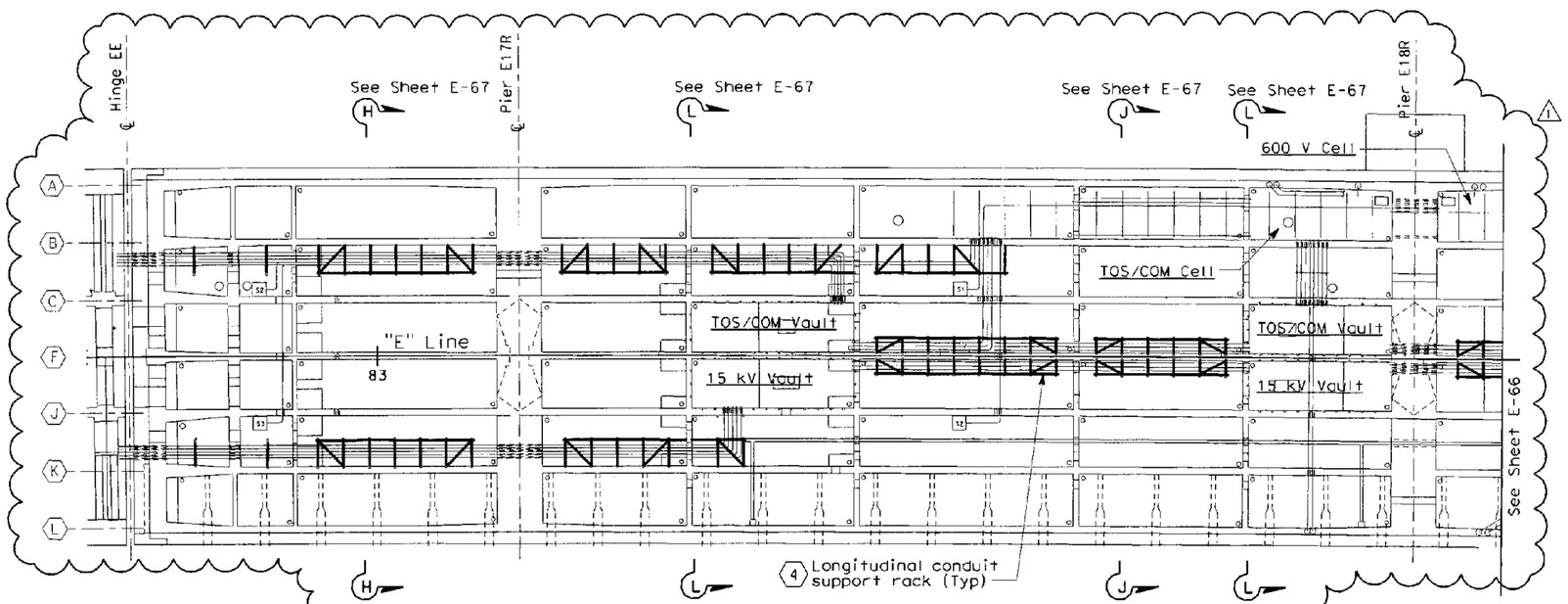

CONDUIT RACK LOCATION PLAN

SHEET NOTES:

1. Install embedded vertical strut channel between intermediate diaphragms in girder wall.
2. Install embedded horizontal strut channel between intermediate diaphragms in girder floor.
3. Install embedded vertical strut channel in all utility vaults.
4. See E-68, Detail 10.
5. Embedded strut channel shall be spaced not to exceed 1830 apart.

NOTES:

1. Contractor shall field adjust location of strut channel inserts to avoid interference with bridge reinforcement, conflicts to structures access and openings.
2. Strut channel location shall correspond to conduit plan as shown on sheets starting at E-51 and Structural Drawings.

REGISTERED PROFESSIONAL ENGINEER FADI WALIEDDINE No. 11465 Exp. 12/31/2009 ELECTRICAL STATE OF CALIFORNIA

MARK	DATE	DESCRIPTIONS	REV	CK	CCO No.
1	5/29/09	Deleted wall strut embeds along girder B and replaced with floor strut embeds between girder A/B. Added floor and wall strut, conduit rack support plan and sheet notes 5.	EJL	FSW	113

REVISIONS

CONTRACT CHANGE ORDER NO. 113
SHEET 9 OF 20 7/9/09

DETAILS
ROADWAY AND GIRDER LEVEL EASTBOUND EMBEDDED CONCRETE INSERT CHANNEL
SCALE: 1:200

E-65

THIS PLAN IS ACCURATE FOR ELECTRICAL WORK ONLY.

CALCULATED/ DESIGNED BY	FK	DATE 2/06	REVISED BY
CHECKED BY	AB	2/06	DATE REVISED

DESIGN OVERSIGHT
BEHZAD GOLEMOHAMMADI

STATE OF CALIFORNIA - DEPARTMENT OF TRANSPORTATION
Caltrans

DATE PLOTTED => 5/28/2009
TIME PLOTTED => 3:12:54 PM
LAST REVISION 00-00-00

FOR REDUCED PLANS ORIGINAL SCALE IS IN MILLIMETERS 0 20 40 60 80

DGN FILE =>T:\13103\MS\pse\OTD-Contract 1\CCO\Electrical\CCO-113 EB Conduit Rack\40120lud065r1.cgn
USERNAME =>rigofrente
CU 04251
EA 0120L1

DIST	COUNTY	ROUTE	KILOMETER POST TOTAL PROJECT	SHEET No	TOTAL SHEETS
04	Ala	80	1.6/2.7	437 R1	643

REGISTERED ELECTRICAL ENGINEER 05/15/06 DATE

1-29-07
PLANS APPROVAL DATE

REGISTERED PROFESSIONAL ENGINEER JENS ERLINGSSON No. 8249 Exp. 9/30/08 ELECTRICAL STATE OF CALIFORNIA

PB POWER, Inc.
A Parsons Brinckerhoff Company
303 Second St., Suite 700N
San Francisco, CA 94107-1317

The State of California or its officers or agents shall not be responsible for the accuracy or completeness of electronic copies of this plan sheet.

Caltrans now has a web site! To get to the web site, go to http://www.dot.ca.gov

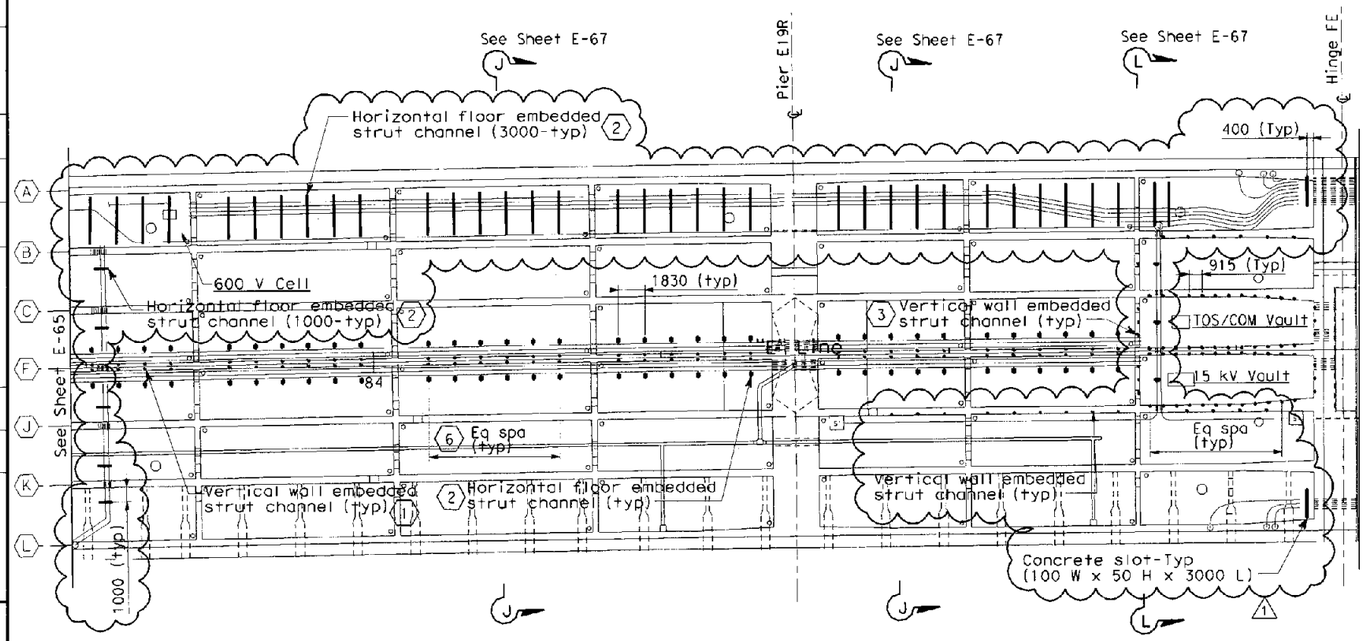

GIRDER CONDUIT SUPPORT PLAN

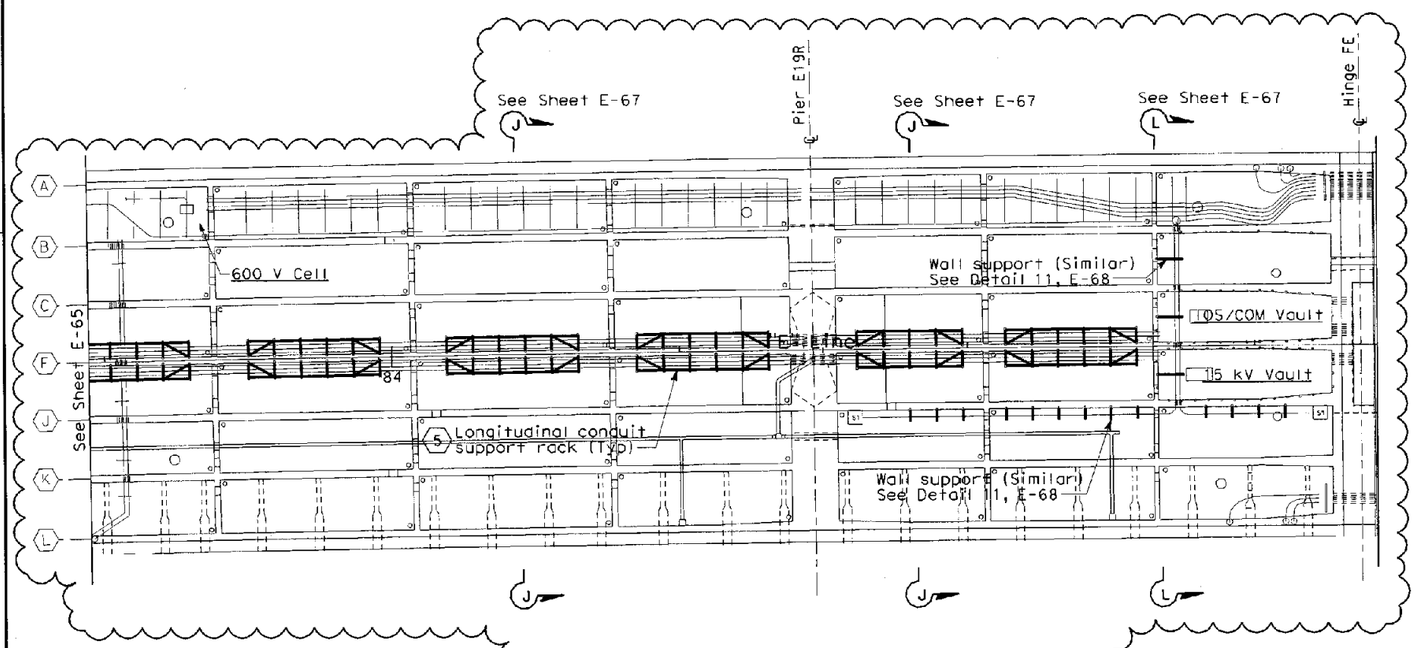

CONDUIT LOCATION SUPPORT PLAN

THIS PLAN IS ACCURATE FOR ELECTRICAL WORK ONLY.

SHEET NOTE:

1. Install embedded vertical strut channel between intermediate diaphragms in girder wall.
2. Install embedded horizontal strut channel between intermediate diaphragms in girder floor.
3. Install embedded vertical strut channel in all utility vaults.
4. ~~See Section C-C, sheet E-63~~
5. See E-68, Detail 10.
6. Embedded strut channel shall be spaced not to exceed 1830 apart.

NOTES:

1. Contractor shall field adjust location of concrete inserts to avoid interference with bridge reinforcement, conflicts to structures access and openings.
2. Strut channel location shall correspond to conduit plan as shown on sheets starting E-51 and Structural Drawings.

REGISTERED PROFESSIONAL ENGINEER FADI WALIEDDINE No. 11465 Exp. 12/31/2009 ELECTRICAL STATE OF CALIFORNIA

MARK	DATE	DESCRIPTIONS	REV	CK	CCO No.
1	5/29/09	Deleted wall strut embeds along girder B and replaced with floor strut embeds between girder A/B. Added floor and wall strut, conduit rack support plan and sheet notes 6. Deleted sheet notes 4.	EJL	FSW	113

REVISIONS

CONTRACT CHANGE ORDER NO. 113
SHEET 10 OF 20 7/9/09

DETAILS
ROADWAY AND GIRDER LEVEL EASTBOUND EMBEDDED CONCRETE INSERT CHANNEL
SCALE: 1:200

E-66

CALCULATED/ DESIGNED BY	FK	DATE 2/06	REVISED BY	DATE REVISED
CHECKED BY	AB	2/06		

DESIGN OVERSIGHT
BEHZAD GOLEMOHAMMADI

STATE OF CALIFORNIA - DEPARTMENT OF TRANSPORTATION
Caltrans

LAST REVISION 00-00-00
DATE PLOTTED => 5/28/2009
TIME PLOTTED => 3:20:31 PM

FOR REDUCED PLANS ORIGINAL SCALE IS IN MILLIMETERS 0 20 40 60 80

DGN FILE => I:\13103\MS\pse\OTD-Contract 1\CCO\Electrical\CCO-113 EB Conduit Rack\401201u0E6r11.cgn
USERNAME => icafrente
CU 04251
EA 0120L1

DIST	COUNTY	ROUTE	KILOMETER POST TOTAL PROJECT	SHEET No	TOTAL SHEETS
04	Ala	80	1.6/2.7	438 R1	643

05/15/06
REGISTERED ELECTRICAL ENGINEER DATE

1-29-07
PLANS APPROVAL DATE

REGISTERED PROFESSIONAL ENGINEER JENS ERLINGSSON No. 8249 Exp. 9/30/08 ELECTRICAL STATE OF CALIFORNIA

PB POWER, Inc.
A Parsons Brinckerhoff Company
303 Second St., Suite 700N
San Francisco, CA 94107-1317

The State of California or its officers or agents shall not be responsible for the accuracy or completeness of electronic copies of this plan sheet.

Caltrans now has a web site! To get to the web site, go to http://www.dot.ca.gov

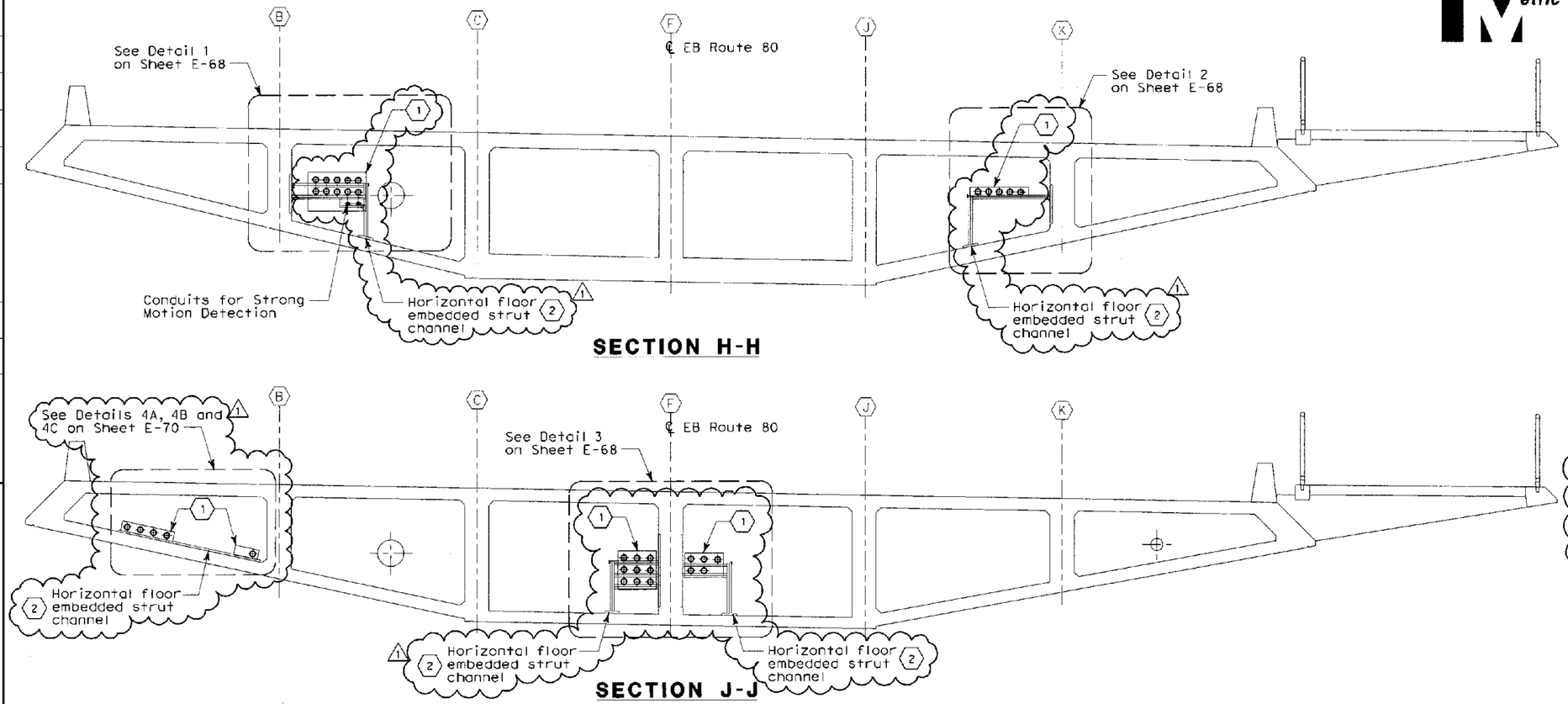

NOTES:

1. References:
   - For conduit layout plan, see sheets E-51 and E-52.
   - For plan where Section H-H is taken, refer to sheet E-65.
   - For plan where Section J-J is taken, refer to sheets E-65 and E-66.
   - For plan where Section L-L is taken, refer to sheets E-65 and E-66.
   - For typical wall and horizontal floor channel insert, see Detail 9 sheet E-68.

SHEET NOTES:

1. For location and size of conduit block out, see Structures plan sheets.
2. For details, see Detail 9 sheet E-68.

REGISTERED PROFESSIONAL ENGINEER FADI WALIEDDINE No. 11465 Exp. 12/31/2009 ELECTRICAL STATE OF CALIFORNIA

MARK	DATE	DESCRIPTIONS	REV	CK	CCO No.
1	5/29/09	Revised conduit locations on Sections H-H and J-J. Deleted Detail 4 and replaced with Details 4A, 4B and 4C.	EJL	FSW	113

REVISIONS

CONTRACT CHANGE ORDER NO. 113
SHEET 11 OF 20 7/9/09

DETAILS
ROADWAY AND GIRDER LEVEL EASTBOUND GIRDER CONDUIT SUPPORTS

SCALE: 1:50

E-67

CALCULATED/DESIGNED BY	FK
CHECKED BY	AB
DATE REVISED	2/06
REVISED BY	

DESIGN OVERSIGHT
BEHZAD GOLEMOHAMMADI

STATE OF CALIFORNIA - DEPARTMENT OF TRANSPORTATION
Caltrans

LAST REVISION 00-00-00
DATE PLOTTED => 5/28/2009
TIME PLOTTED => 3:21:07 PM

FOR REDUCED PLANS ORIGINAL SCALE IS IN MILLIMETERS 0 20 40 60 80

DGN FILE => T:\13103\MS\base\07-Contract 1\CCO\Electrical\CCO-113 EB Conduit Rack\40120-j006rr1.dgn
USERNAME => rcafrente

CU 04251 EA 0120L1

DIST	COUNTY	ROUTE	KILOMETER POST TOTAL PROJECT	SHEET No.	TOTAL SHEETS
04	Ala	80	1.6/2.7	439 R1	643

REGISTERED ELECTRICAL ENGINEER 05/15/06 DATE

1-29-07
PLANS APPROVAL DATE

REGISTERED PROFESSIONAL ENGINEER JENS ERLINGSSON No. 8249 Exp. 9/30/08 ELECTRICAL STATE OF CALIFORNIA

PB POWER, Inc.
A Parsons Brinckerhoff Company
303 Second St., Suite 700N
San Francisco, CA 94107-1317

The State of California or its officers or agents shall not be responsible for the accuracy or completeness of electronic copies of this plan sheet.

Caltrans now has a web site! To get to the web site, go to http://www.dot.ca.gov

Caltrans Metric

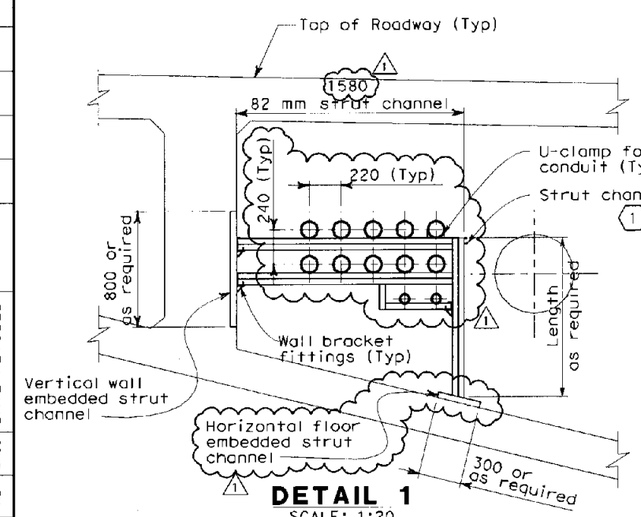

DETAIL 1
SCALE: 1:20

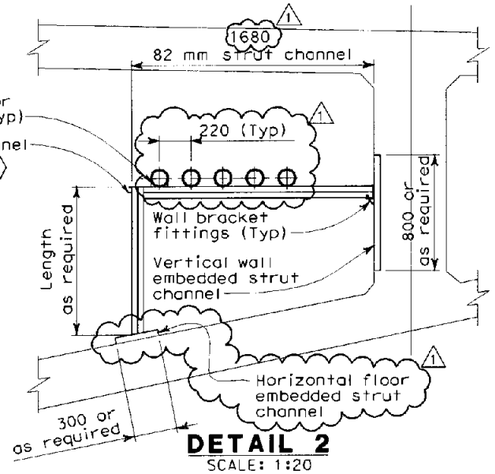

DETAIL 2
SCALE: 1:20

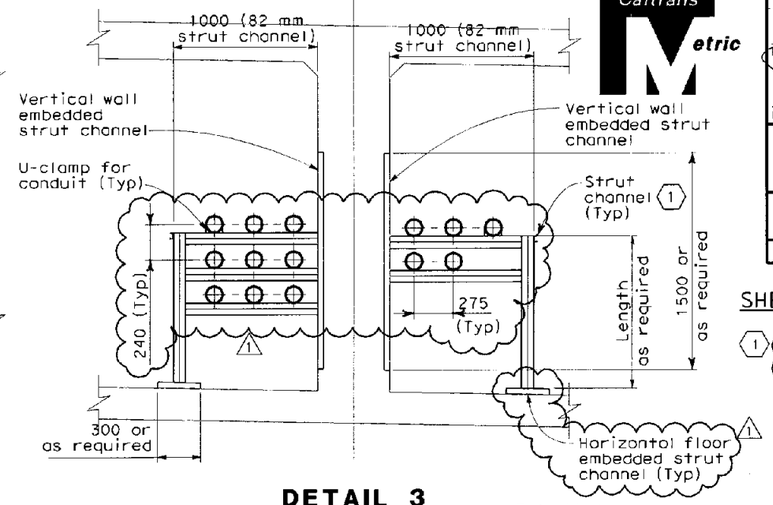

DETAIL 3
SCALE: 1:20

SHEET NOTES:

1. For location of longitudinal channel, see sheets E-65 and E-66. For typical detail, see Detail 10 this drawing

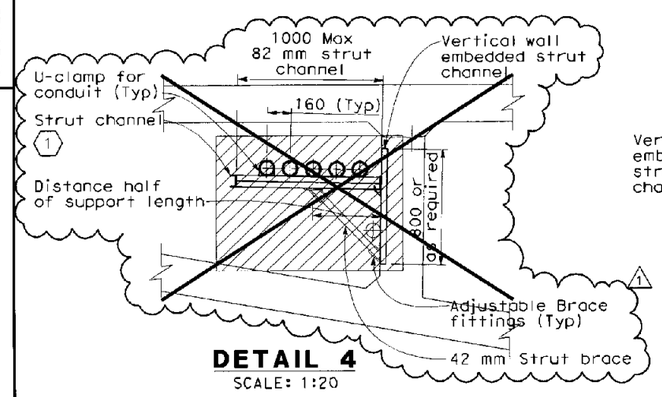

DETAIL 4
SCALE: 1:20

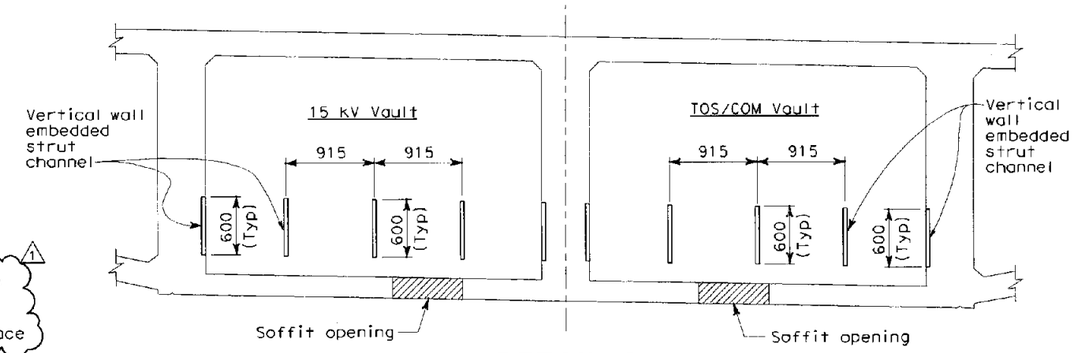

DETAIL 8
NO SCALE

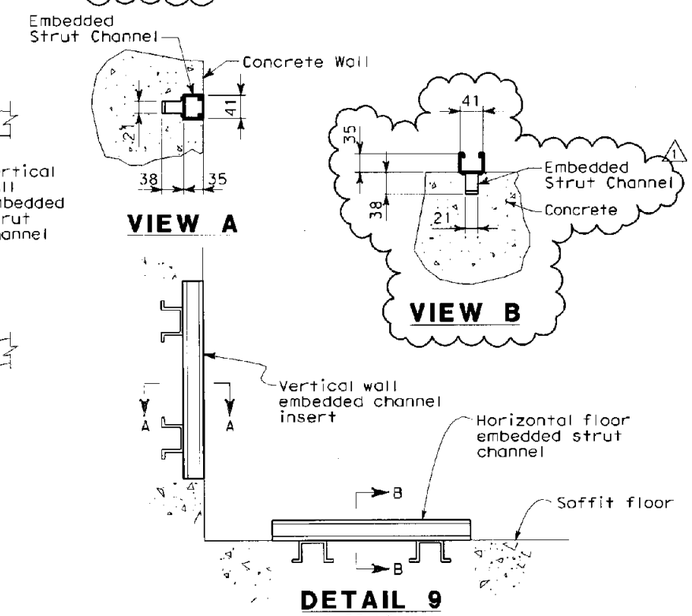

DETAIL 9
NO SCALE

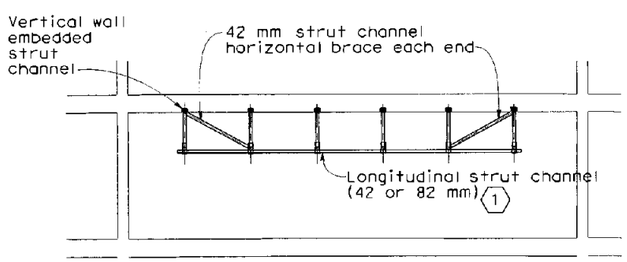

DETAIL 10
PLAN-TYPICAL
NO SCALE

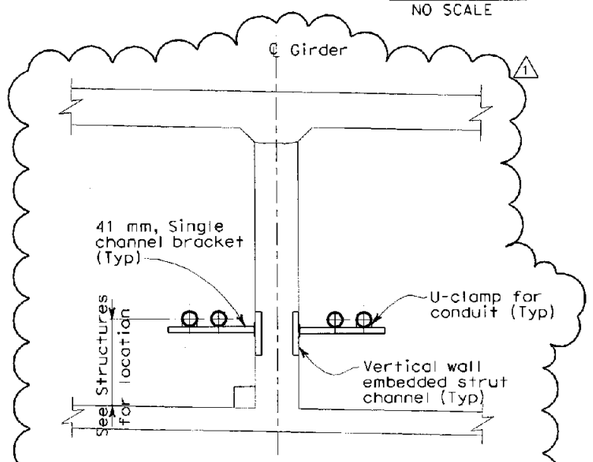

DETAIL 11
(BRACKET MOUNTED SUPPORT, SEE PLAN FOR LOCATION)
SCALE: 1:20

REGISTERED PROFESSIONAL ENGINEER FADI WALI EDDINE No. 11465 Exp. 12/31/2009 ELECTRICAL STATE OF CALIFORNIA

MARK	DATE	DESCRIPTIONS	REV	CK	CCO No.
1	5/29/09	Revised conduit locations on Details 1, 2, 3, 9 and 10. Deleted Detail 4. Added Detail 11.	EJL	FSW	113

REVISIONS

CONTRACT CHANGE ORDER NO. 113
SHEET 12 OF 20 7/9/09

DETAILS
ROADWAY AND GIRDER LEVEL EASTBOUND TYPICAL CONDUIT INSTALLATION AND SECTIONS
SCALE AS NOTED

E-68

STATE OF CALIFORNIA - DEPARTMENT OF TRANSPORTATION
Caltrans

DESIGN OVERSIGHT: BEHZAD GOLEMOHAMMADI

CALCULATED/DESIGNED BY	FK	DATE 2/06	REVISED BY
CHECKED BY	AB	2/06	DATE REVISED

LAST REVISION 00-00-00
DATE PLOTTED => 5/28/2009
TIME PLOTTED => 3:21:38 PM

FOR REDUCED PLANS ORIGINAL SCALE IS IN MILLIMETERS 0 20 40 60 80

DGN FILE =>T:\13103\MS\pse\0"D-Contract 1\CCO\Electrical\CCO-113 EB Conduit Rack\401201ua068r1.dgn
USERNAME =>r'cafrente
CU 04251
EA 0120L1

DIST	COUNTY	ROUTE	KILOMETER POST TOTAL PROJECT	SHEET No	TOTAL SHEETS
04	Ala	80	1.6/2.7	440 R1	643

Caltrans Metric

05/15/06
REGISTERED ELECTRICAL ENGINEER DATE

1-29-07
PLANS APPROVAL DATE

REGISTERED PROFESSIONAL ENGINEER JENS ERLINGSSON No. 8249 Exp. 9/30/08 ELECTRICAL STATE OF CALIFORNIA

PB POWER, Inc.
A Parsons Brinckerhoff Company
303 Second St., Suite 700N
San Francisco, CA 94107-1317

The State of California or its officers or agents shall not be responsible for the accuracy or completeness of electronic copies of this plan sheet.

Caltrans now has a web site! To get to the web site, go to http://www.dot.ca.gov

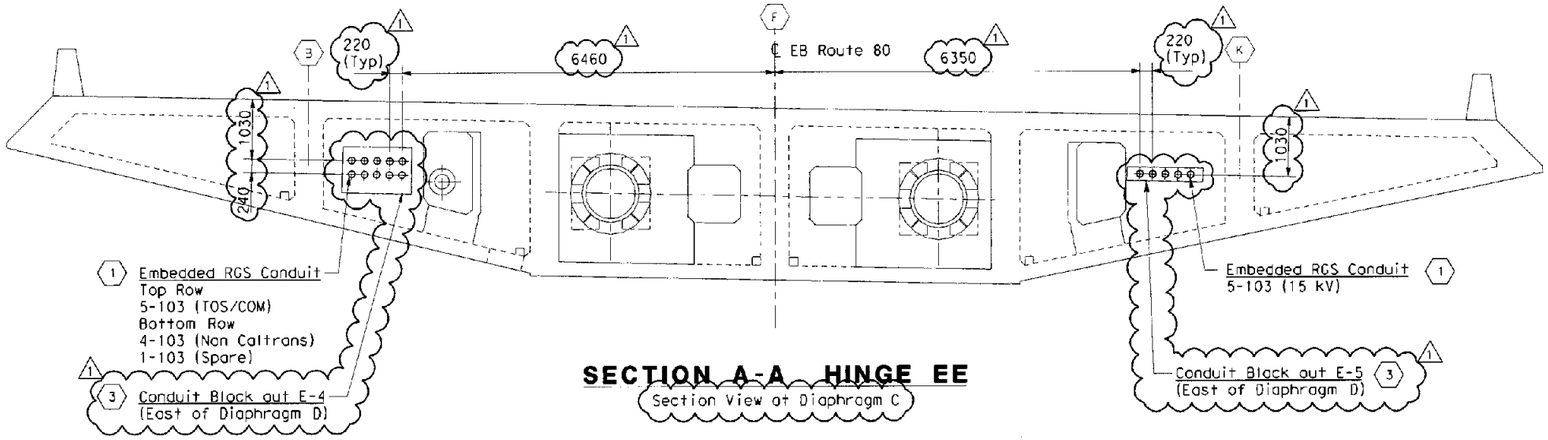

SECTION A-A HINGE EE

Section View at Diaphragm C

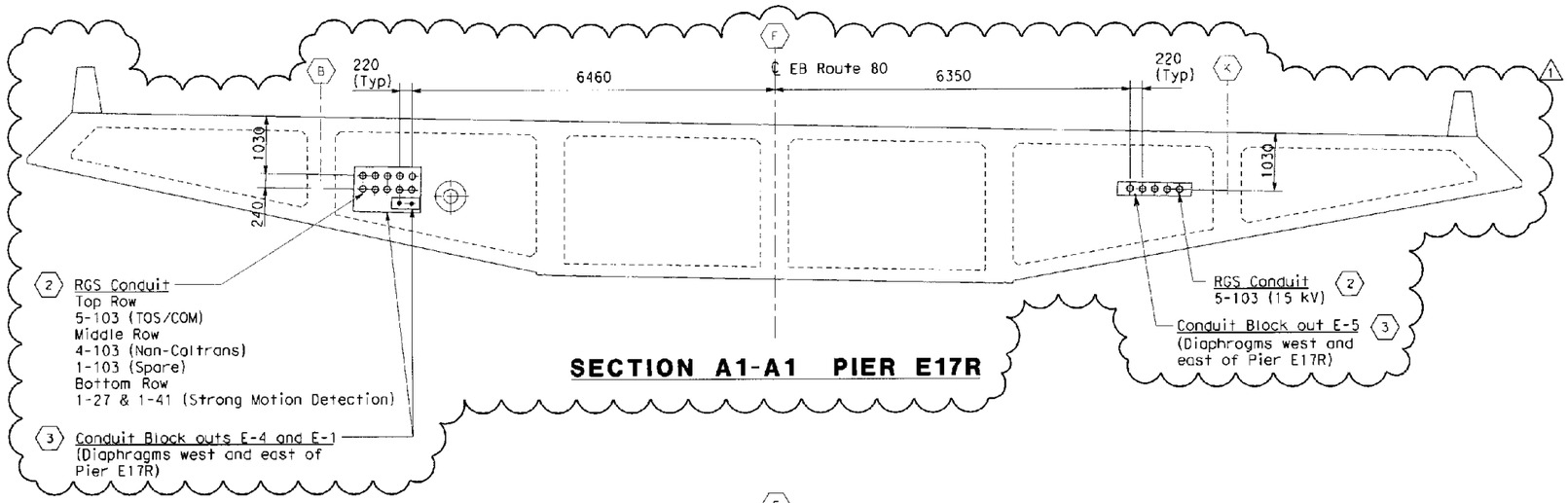

SECTION A1-A1 PIER E17R

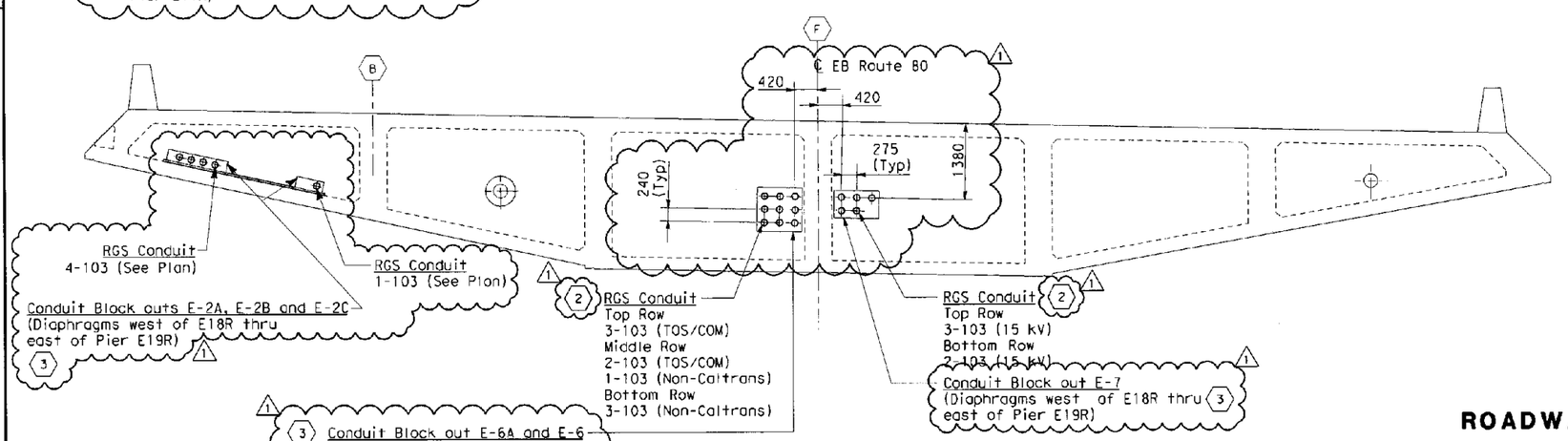

SECTION B-B PIER E19R

(Similar at Pier E18R)

NOTES:

1. References:
   - For conduit layout plan, see sheets E-51 thru E-52.
   - For plan where section A-A and (A1-A1) are taken, refer to sheet E-51 and E-60.
   - For plan where section B-B is taken, refer to sheet E-52.

SHEET NOTES:

1. ~~All embedded conduit arrangement and dimensions shall be provided on Structural Plans.~~ Conduits thru pier cap are provided with pipe sleeve. The Contractor shall ensure the conduits are solidly secured at this location.
2. Provided with the pipe sleeves for conduits.
3. For size of conduit block outs, see Structures sheets.

REGISTERED PROFESSIONAL ENGINEER ADI WALIEDDINE No. 11465 Exp. 12/31/2009 ELECTRICAL STATE OF CALIFORNIA

MARK	DATE	DESCRIPTIONS	REV	CK	CCO No.
1	5/29/09	Revised conduit locations on Sections A-A, B-B, sheet notes 1 and notes 1. Added Section A1-A1.	EJL	FSW	113
		REVISIONS			

CONTRACT CHANGE ORDER NO. 113
SHEET 13 OF 20 7/9/09

DETAILS
ROADWAY AND GIRDER LEVEL EASTBOUND GIRDER SECTIONS

SCALE: 1:50

E-69

ALL DIMENSIONS ARE IN MILLIMETERS UNLESS OTHERWISE SHOWN

FOR REDUCED PLANS ORIGINAL SCALE IS IN MILLIMETERS 0 20 40 60 80

DESIGN OVERSIGHT: BEHZAD GOLEMOHAMMADI

CALCULATED/DESIGNED BY	FK	DATE 2/06	REVISED BY
CHECKED BY	AB	2/06	DATE REVISED

STATE OF CALIFORNIA - DEPARTMENT OF TRANSPORTATION
Caltrans

LAST REVISION 00-00-00 | DATE PLOTTED => 5/28/2009 | TIME PLOTTED => 3:21:59 PM

DGN FILE => I:\13103\MS\pse\OTD-Contract 1\CCO\Electrical\CCO-113 EB Conduit Rack\40120 ua069r1.dgn
USERNAME => ricafrente
CU 04251 | EA 0120L1

DIST	COUNTY	ROUTE	KILOMETER POST TOTAL PROJECT	SHEET NO	TOTAL SHEETS
04	Ala	80	1.6/2.7	441 R1	643

REGISTERED ELECTRICAL ENGINEER 05/15/06 DATE

1-29-07
PLANS APPROVAL DATE

REGISTERED PROFESSIONAL ENGINEER JENS ERLINGSSON No. 8249 Exp. 9/30/08 ELECTRICAL STATE OF CALIFORNIA

PB POWER, Inc.
A Parsons Brinckerhoff Company
303 Second St., Suite 700N
San Francisco, CA 94107-1317

The State of California or its officers or agents shall not be responsible for the accuracy or completeness of electronic copies of this plan sheet.

Caltrans now has a web site! To get to the web site, go to http://www.dot.ca.gov

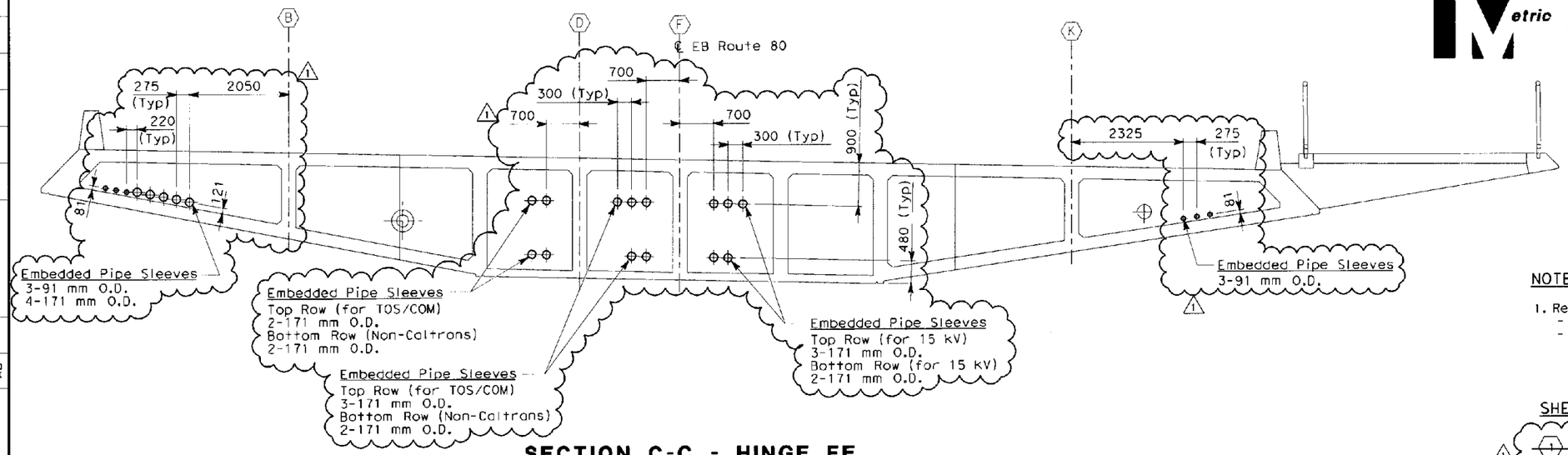

SECTION C-C - HINGE FE

SCALE: 1:50

NOTES:

1. References:
   - For conduit layout plan, see sheets E-52.
   - For plan where section C-C is taken, refer to sheets E-52 and E-62.

SHEET NOTES:

1 ~~All embedded conduit arrangement and dimensions shall be provided on Structural Plans.~~ Deleted.

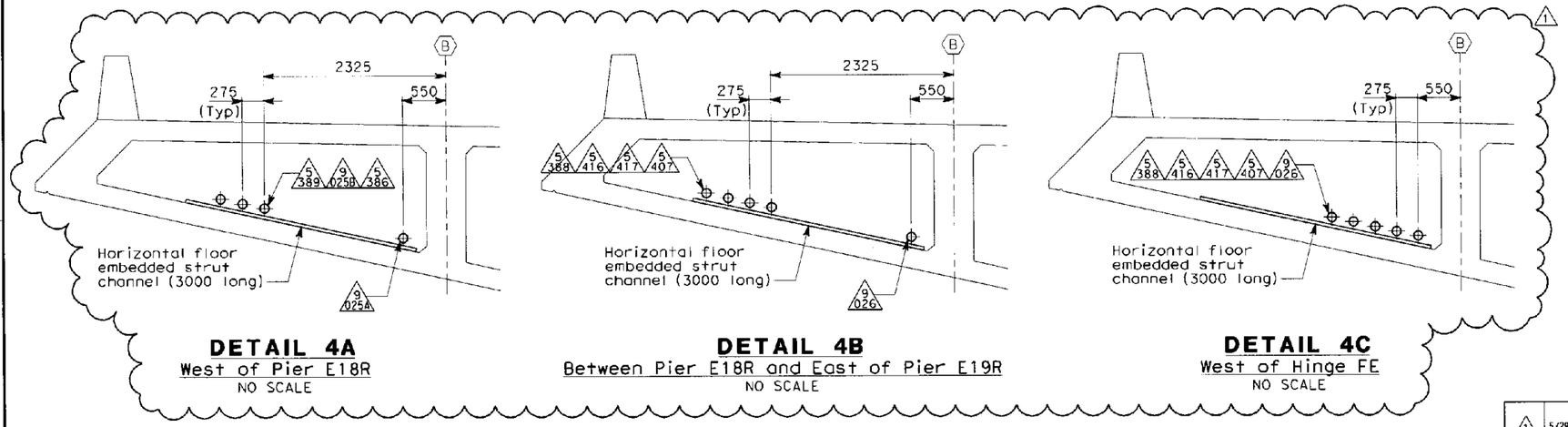

DETAIL 4A
West of Pier E18R
NO SCALE

DETAIL 4B
Between Pier E18R and East of Pier E19R
NO SCALE

DETAIL 4C
West of Hinge FE
NO SCALE

REGISTERED PROFESSIONAL ENGINEER FADI WALIEDDINE No. 11465 Exp. 12/31/2009 ELECTRICAL STATE OF CALIFORNIA

MARK	DATE	DESCRIPTIONS	REV	CK	CCO No.
1	5/29/09	Revised conduit locations on Section C-C. Added Details 4A, 4B and 4C.	EJL	FSW	113

REVISIONS

CONTRACT CHANGE ORDER NO. 113
SHEET 14 OF 20 7/9/09

DETAILS
ROADWAY AND GIRDER LEVEL EASTBOUND GIRDER SECTIONS
SCALE AS NOTED

E-70

DATE	REVISED BY	DATE	REVISED
2/06	REVISED BY	2/06	DATE REVISED

CALCULATED/DESIGNED BY FK
CHECKED BY AB
DESIGN OVERSIGHT BEHZAD GOLEMOHAMMADI

STATE OF CALIFORNIA - DEPARTMENT OF TRANSPORTATION
Caltrans

LAST REVISION 00-00-00
DATE PLOTTED => 5/28/2009
TIME PLOTTED => 3:22:21 PM

FOR REDUCED PLANS ORIGINAL SCALE IS IN MILLIMETERS 0 20 40 60 80

DGN FILE =>T:\13103\MS\pse\OTD-Contract 1\CCO\Electrical\CCO-113 EB Conduit Rack\40120-u0070r1.dgn
USERNAME =>ricafrente
CU 04251
EA 0120L1

DIST	COUNTY	ROUTE	KILOMETER POST TOTAL PROJECT	SHEET NO	TOTAL SHEETS
04	Ala	80	1.6/2.7	545 R1	643

Jens Erlingsson 05/15/06
REGISTERED ELECTRICAL ENGINEER DATE

1-29-07
PLANS APPROVAL DATE

REGISTERED PROFESSIONAL ENGINEER JENS ERLINGSSON No. 9249 Exp. 9/30/08 ELECTRICAL STATE OF CALIFORNIA

PB POWER, Inc.
A Parsons Brinckerhoff Company
303 Second St., Suite 700N
San Francisco, CA 94107 317

The State of California or its officers or agents shall not be responsible for the accuracy or completeness of electronic copies of this plan sheet.

Caltrans now has a web site! To get to the web site, go to http://www.dot.ca.gov

Caltrans Metric

NOTES:

1. References:
   - For girder sections, see sheet E-177.
   - For conduit and tray schedules, see sheets ~~starting at E-224.~~
   ~~(*) Location of conduits to be provided by Structures or located by field to suit field condition.~~ 1
2. Install conduits only.

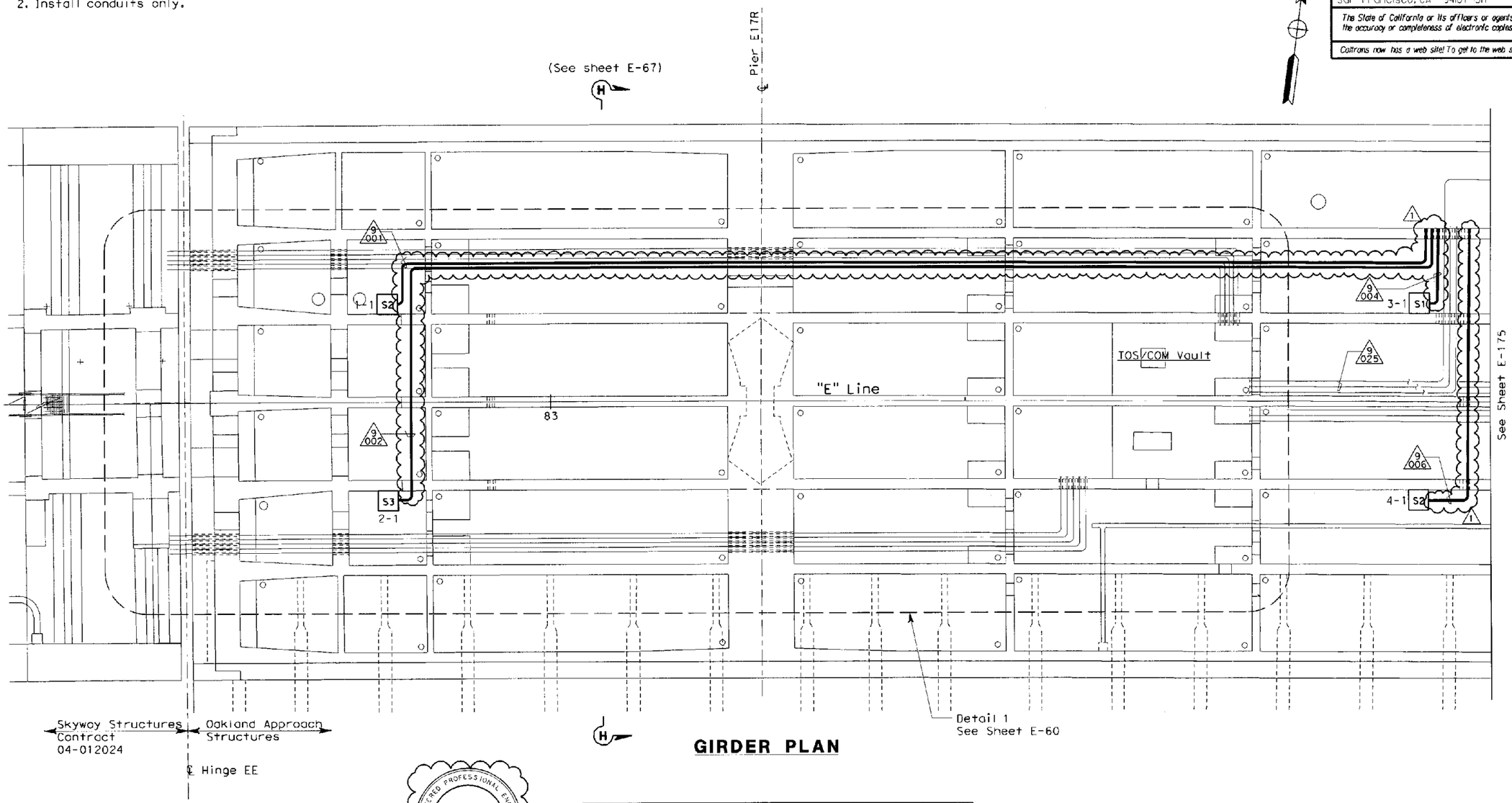

GIRDER PLAN

REGISTERED PROFESSIONAL ENGINEER FADI WALIEDDINE No. 11465 Exp. 12/31/2009 ELECTRICAL STATE OF CALIFORNIA

MARK	DATE	DESCRIPTIONS	REV	CK	CCO No.
1	5/29/09	Revised conduit locations and notes 1.	EJL	FSW	113

REVISIONS

CONTRACT CHANGE ORDER NO. 113
SHEET 15 OF 20 7/9/09

DETAILS
STRONG MOTION DETECTION SYSTEM
GIRDER LEVEL PARTIAL PLAN
SCALE: 1:100

E-174

STATE OF CALIFORNIA - DEPARTMENT OF TRANSPORTATION
Caltrans

DESIGN OVERSIGHT: BEHZAD GOLEMOHAMMADI

CALCULATED/DESIGNED BY | DATE 2/06 | REVISED BY
CHECKED BY | 2/06 | DATE REVISED

LAST REVISION 00-00-00 | DATE PLOTTED -> 5/26/2009 | TIME PLOTTED => 3:22:55 PM

FOR REDUCED PLANS ORIGINAL SCALE IS IN MILLIMETERS 0 20 40 60 80

DGN FILE =>T:\13103\MS\pse\OTD-Contract 1\CCO\Electrical\CCO-113 EB Conduit Rack\40120lua174r1.dgn
USERNAME =>ricafrente
CU 04251 EA 0120L1

DIST	COUNTY	ROUTE	KILOMETER POST TOTAL PROJECT	SHEET NO	TOTAL SHEETS
04	Ala	80	1.6/2.7	546 R1	643

REGISTERED ELECTRICAL ENGINEER 05/15/06 DATE

1-29-07
PLANS APPROVAL DATE

REGISTERED PROFESSIONAL ENGINEER JENS ERLINGSSON No. 8249 Exp. 9/30/08 ELECTRICAL STATE OF CALIFORNIA

PB POWER, Inc.
A Parsons Brinckerhoff Company
303 Second St., Suite 700N
San Francisco, CA 94107-1317

The State of California or its officers or agents shall not be responsible for the accuracy or completeness of electronic copies of this plan sheet.

Caltrans now has a web site! To get to the web site, go to http://www.dot.ca.gov

Caltrans Metric

NOTES:

1. References:
   - For girder sections, see sheet E-177.
   - For conduit and tray schedules, see sheets ~~starting at E-224.~~ 1
   - ~~(*) Location of conduits shall be provided by Structures or by field to suit field conditions.~~
2. Install conduits only.

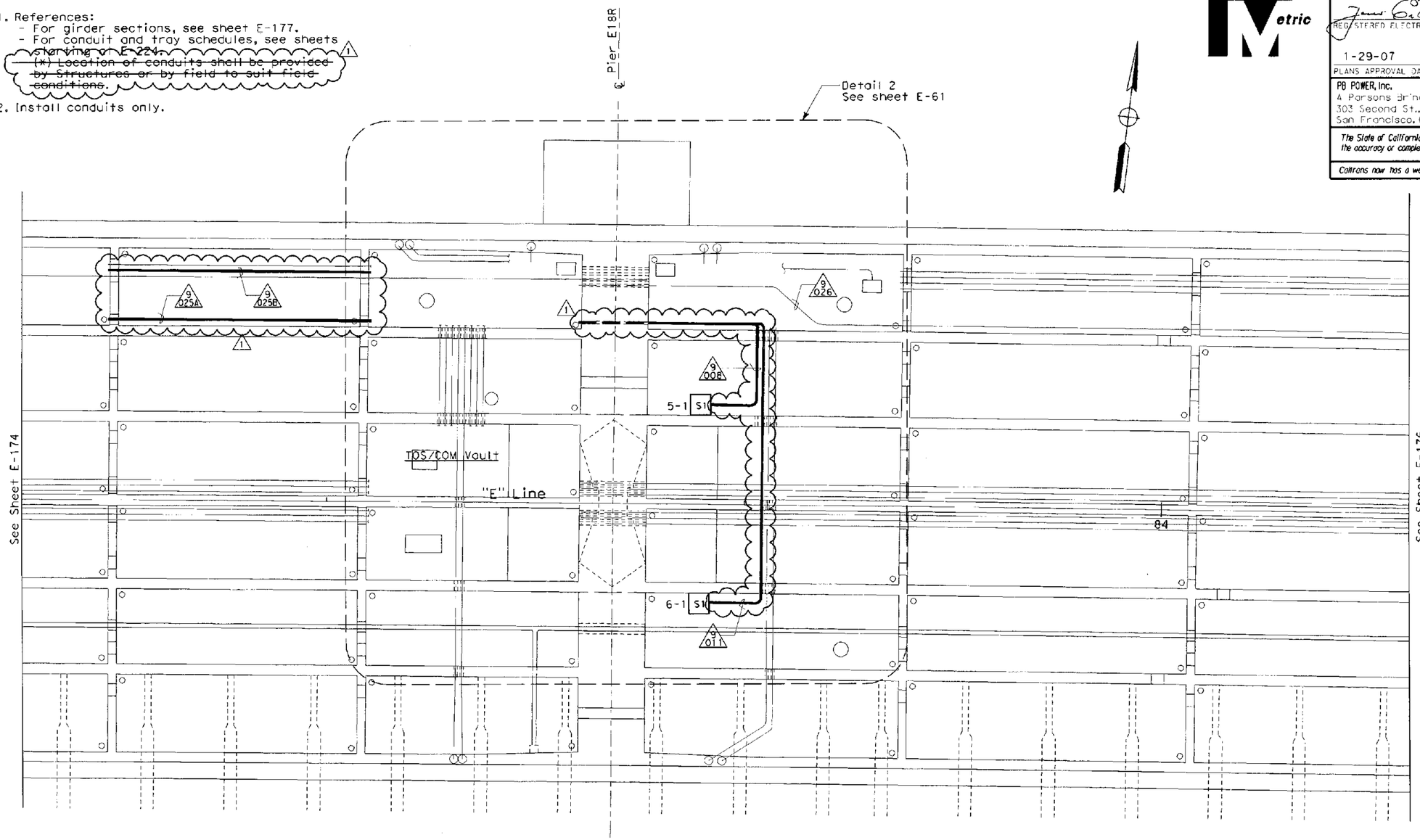

GIRDER PLAN

REGISTERED PROFESSIONAL ENGINEER FADI WALIEDDINE No. 11465 Exp. 12/31/2009 ELECTRICAL STATE OF CALIFORNIA

MARK	DATE	DESCRIPTIONS	REV	CK	CCO No.
1	5/29/09	Revised conduit locations and notes 1. Added conduit numbers.	EJL	FSW	113

REVISIONS

CONTRACT CHANGE ORDER NO. 113
SHEET 16 OF 20 7/9/09

DETAILS
STRONG MOTION DETECTION SYSTEM
GIRDER LEVEL PARTIAL PLAN
SCALE: 1:100

E-175

DATE	REVISED BY	DATE REVISED
2/06	KC	AB

CALCULATED/DESIGNED BY
CHECKED BY

DESIGN OVERSIGHT
BEHZAD GOLEMOHAMMADI

STATE OF CALIFORNIA - DEPARTMENT OF TRANSPORTATION
Caltrans

LAST REVISION 00-00-00
DATE PLOTTED => 5/28/2009
TIME PLOTTED => 3:23:24 PM

FOR REDUCED PLANS ORIGINAL SCALE IS IN MILLIMETERS 0 20 40 60 80

DGN FILE =>T:\13103\VS\pse\OTD-Contract 1\CCO\Electrical\CCO-113 EB Conduit Rack\40120lwa175r1.dgn
USERNAME =>ricafrente

CU 04251 EA 0120L1

DIST	COUNTY	ROUTE	KILOMETER POST TOTAL PROJECT	SHEET No.	TOTAL SHEETS
04	Ala	80	1.6/2.7	547 R1	643

REGISTERED ELECTRICAL ENGINEER 05/15/06 DATE

1-29-07
PLANS APPROVAL DATE

REGISTERED PROFESSIONAL ENGINEER JENS ERLINGSSON No. 8249 Exp. 9/30/08 ELECTRICAL STATE OF CALIFORNIA

PB POWER, Inc.
A Parsons Brinckerhoff Company
303 Second St., Suite 700N
San Francisco, CA 94107-1317

The State of California or its officers or agents shall not be responsible for the accuracy or completeness of electronic copies of this plan sheet.

Caltrans now has a web site! To get to the web site, go to http://www.dot.ca.gov

Caltrans Metric

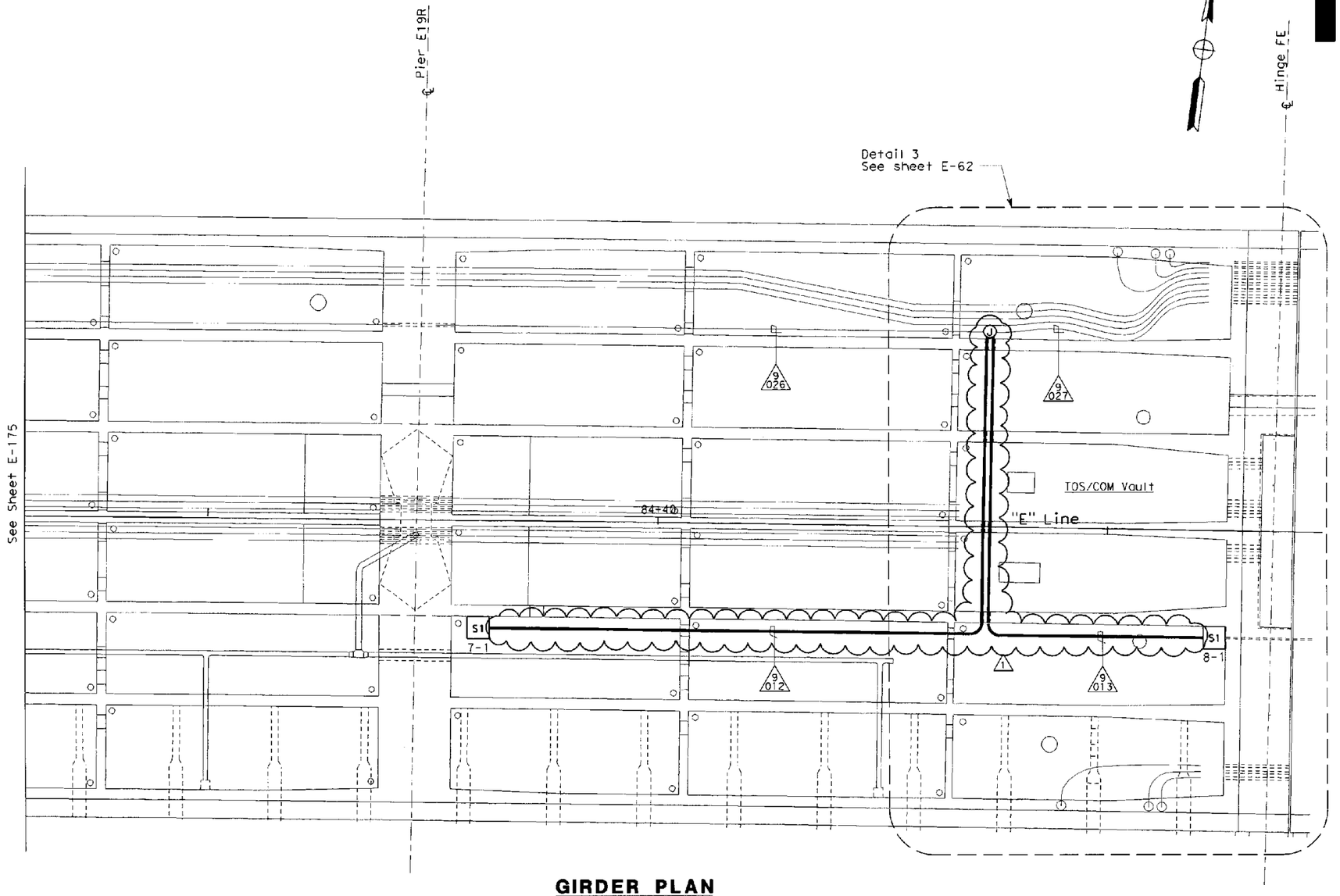

GIRDER PLAN

NOTES:

1. References:
   - For girder sections, see sheet E-177.
   - For conduit and tray schedules, see sheets ~~starting at E-224.~~
   ~~(x) Location of conduits shall be provided by Structures or located by field to suit field condition.~~
2. Install conduits only.

REGISTERED PROFESSIONAL ENGINEER FADI WALIEDDINE No. 11465 Exp. 12/31/2009 ELECTRICAL STATE OF CALIFORNIA

MARK	DATE	DESCRIPTIONS	REV	CK	CCO No.
1	5/29/09	Revised conduit locations and notes 1.	EJL	FSW	113

REVISIONS

CONTRACT CHANGE ORDER NO. 113
SHEET 17 OF 20 7/9/09

DETAILS
STRONG MOTION DETECTION SYSTEM
GIRDER LEVEL PARTIAL PLAN
SCALE: 1:100

E-176

CALCULATED/ DESIGNED BY	FK	DATE 2/06	REVISED BY
CHECKED BY	AB	2/06	DATE REVISED

DESIGN OVERSIGHT
BEHZAD GOLEMOHAMMADI

STATE OF CALIFORNIA - DEPARTMENT OF TRANSPORTATION
Caltrans

LAST REVISION 00-00-00
DATE PLOTTED => 5/28/2009
TIME PLOTTED => 3:30:11 PM

FOR REDUCED PLANS ORIGINAL SCALE IS IN MILLIMETERS 0 20 40 60 80

DGN FILE => T:\13103\MS\pse\OTD-Contract 1\CCO\Electrical\CCO-113 EB Conduit Rack\401201ua176rd.dgn
USERNAME => ricafrente

CU 04251 EA 0120L1

DIST	COUNTY	ROUTE	KILOMETER POST TOTAL PROJECT	SHEET No	TOTAL SHEETS
04	Ala	80	1.6/2.7	548 R1	643

REGISTERED ELECTRICAL ENGINEER — 05/15/06 DATE

1-29-07
PLANS APPROVAL DATE

REGISTERED PROFESSIONAL ENGINEER — JENS ERLINGSSON No. 8249 Exp. 9/30/08 ELECTRICAL — STATE OF CALIFORNIA

PB POWER, Inc.
A Parsons Brinckerhoff Company
303 Second St., Suite 700N
San Francisco, CA 94107-1317

The State of California or its officers or agents shall not be responsible for the accuracy or completeness of electronic copies of this plan sheet.

Caltrans now has a web site! To get to the web site, go to http://www.dot.ca.gov

Caltrans Metric

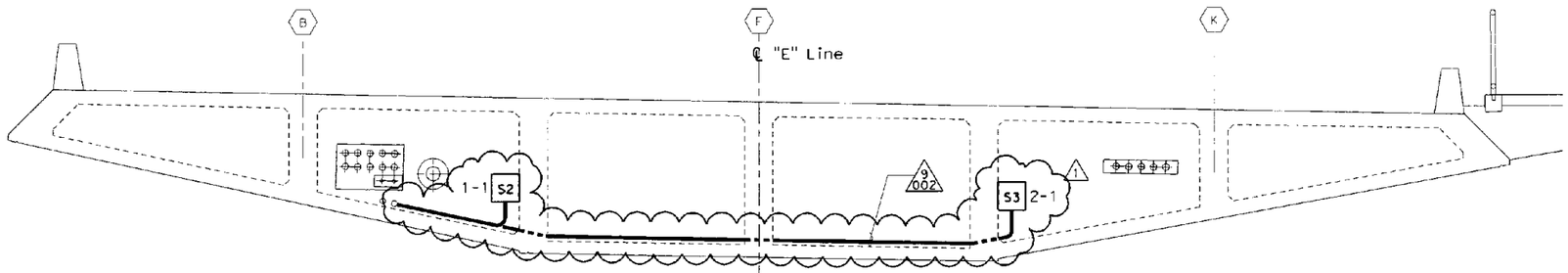

HINGE EE

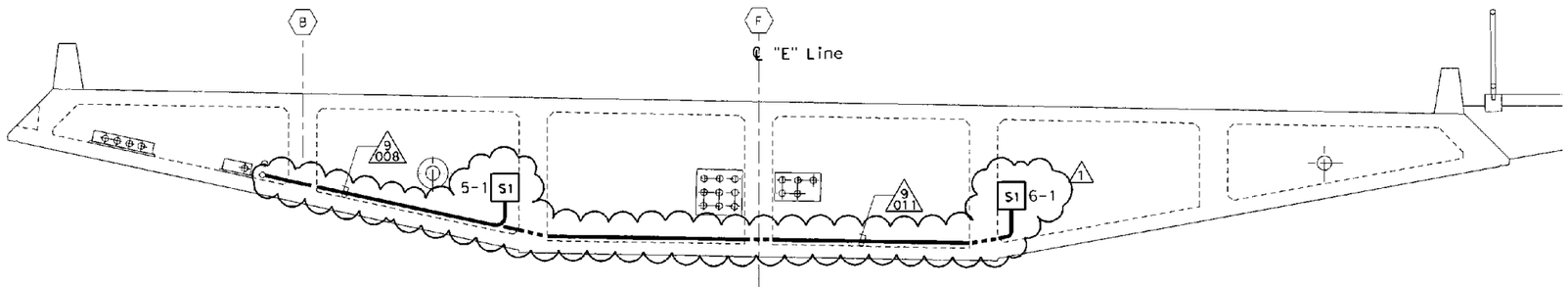

PIER E18R

(LOCATIONS FOR SENSORS @ MIDSPAN BETWEEN PIER E17R & E18R WILL BE SIMILAR)

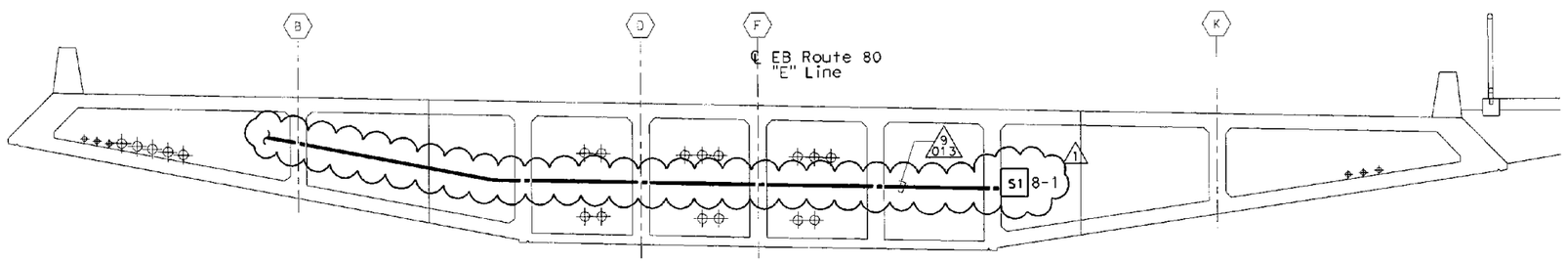

HINGE FE

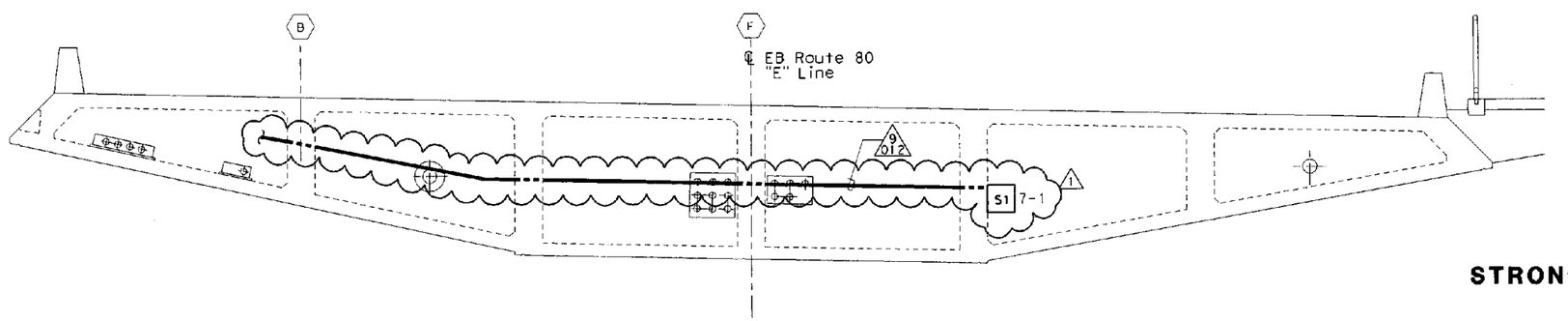

PIER E19R

NOTES:

1. Reference:
   ~~(*) Location of conduits shall be provided by structures or located by field to suit field conditions.~~
2. Mount sensor enclosure, 600 above soffit floor

REGISTERED PROFESSIONAL ENGINEER — FADI WALIEDDINE No. 11465 Exp. 12/31/2009 ELECTRICAL — STATE OF CALIFORNIA

MARK	DATE	DESCRIPTIONS	REV	CK	CCO No.
1	5/29/09	Revised conduit locations. Added notes 2.	EJL	FSW	113

REVISIONS

CONTRACT CHANGE ORDER NO. 113
SHEET 18 OF 20 7/9/09

DETAILS
STRONG MOTION DETECTION SYSTEM GIRDER SECTIONS
SCALE: 1:50

E-177

CALCULATED/ DESIGNED BY	KC	DATE 2/06	REVISED BY
CHECKED BY	AB	2/06	DATE REVISED

DESIGN OVERSIGHT
BEHZAD GOLEMOHAMMADI

STATE OF CALIFORNIA - DEPARTMENT OF TRANSPORTATION
Caltrans

LAST REVISION 00-00-00
DATE PLOTTED => 5/28/2009
TIME PLOTTED => 3:30:58 PM

FOR REDUCED PLANS ORIGINAL SCALE IS IN MILLIMETERS 0 20 40 60 80
DGN FILE =>T:\3103\MS\pse\OTD-Contract 1\CCO\Electrica \CCO-113 EB Conduit Rack\40120lua177r1.dgn
USERNAME =>riccfrente
CU 04251
EA 0120L1

DIST	COUNTY	ROUTE	KILOMETER POST TOTAL PROJECT	SHEET NO	TOTAL SHEETS
04	Ala	80	1.6/2.7	583A R2	643

REGISTERED ELECTRICAL ENGINEER 4/30/08 DATE

PLANS APPROVAL DATE

REGISTERED PROFESSIONAL ENGINEER FADI WALIEDDINE No. 11465 Exp. 12/31/2009 ELECTRICAL STATE OF CALIFORNIA

PB POWER, Inc.
A Parsons Brinckerhoff Company
303 Second St., Suite 700N
San Francisco, CA 94107-1317

The State of California or its officers or agents shall not be responsible for the accuracy or completeness of electronic copies of this plan sheet.

Caltrans now has a web site! To get to the web site, go to http://www.dot.ca.gov

Caltrans Metric

CONDUIT DATA

ROADWAY AND GIRDER LEVEL EASTBOUND

Conduit No	Reference	Size	Type	Total Fill (mm²)	Allowable Fill (mm²)	Cable Area (mm²)	Included Cable No.	Conductor Type
5369A	E-53	103	RGS-PVC coated conduit	0.00	3324.51	0.00	Pull Rope 1	Soft Fiber Polyester
5387	E-51, E-61	103	RGS conduit	0.00	3324.51	0.00	Pull Rope 1	Soft Fiber Polyester 2
5389	E-61	103	RGS conduit	0.00	3324.51	0.00	Pull Rope 1	Soft Fiber Polyester
5395	E-61	41	RGS conduit	0.00	534.55	0.00	Pull Rope 1	Soft Fiber Polyester
5397	E-51, E-61	41	RGS conduit	0.00	534.55	0.00	Pull Rope 1	Soft Fiber Polyester
5398	E-51, E-61	41	RGS conduit	0.00	534.55	0.00	Pull Rope 1	Soft Fiber Polyester
5815	E-53	103	RGS-PVC coated conduit	0.00	3324.51	0.00	Pull Rope 1	Soft Fiber Polyester
5820	E-53	78	RGS-PVC coated conduit	0.00	1499.81	0.00	Pull Rope 1	Soft Fiber Polyester 1
						~~366.1~~	~~2626-1~~	~~1-3/C + gnd #4, 600 V, EPR insulation~~
						~~624.31~~	~~2626-2~~	~~1-4/C + gnd #2, 600 V, EPR insulation~~
5821	E-53	78	RGS-PVC coated conduit 1	0.00	1499.81	0.00	Pull Rope 1	Soft Fiber Polyester 1
						~~366.1~~	~~2626~~	~~1-3/C + gnd #4, 600 V, EPR insulation~~
						~~366.1~~	~~2626-1~~	~~1-3/C + gnd #4, 600 V, EPR insulation~~
5822	E-53	78	RGS-PVC coated conduit	0.00	1935.24	0.00	Pull Rope 1	Soft Fiber Polyester 1
						~~366.1~~	~~2621-1~~	~~1-3/C + gnd #4, 600 V, EPR insulation~~
						~~624.31~~	~~2621-2~~	~~1-4/C + gnd #2, 600 V, EPR insulation~~
5823	E-53	78	RGS-PVC coated conduit	0.00	1499.81	0.00	Pull Rope 1	Soft Fiber Polyester 1
						~~366.1~~	~~2621~~	~~1-3/C + gnd #4, 600 V, EPR insulation~~
						~~366.1~~	~~2621-1~~	~~1-3/C + gnd #4, 600 V, EPR insulation~~
Wireway 22E	E-53	203	203 mm x 203 mm wireway	0.00	8258.05	~~366.1~~	~~2621~~	~~1-3/C + gnd #4, 600 V, EPR insulation~~
						~~366.1~~	~~2621-1~~	~~1-3/C + gnd #4, 600 V, EPR insulation~~
						~~366.1~~	~~2626~~	~~1-3/C + gnd #4, 600 V, EPR insulation~~
						~~62.07~~	~~2656-1~~	~~1-3/C #16, 600 V, EPR insulation~~
						133.19	LP281-2/4	~~3 + 1 gnd #8, #10 600 V, RHH/RHW insulation~~
						~~49.21~~	~~UP271-10~~	~~3-1/C #12, 600 V, RHH/RHW insulation~~
						~~49.21~~	~~UP271-2~~	~~2 + 1 gnd #12, #12 600 V RHH/RHW insulation~~
						~~227.46~~	~~UP271-5~~	~~1-2/C + gnd #8, 600 V, EPR insulation~~

MARK	DATE	DESCRIPTIONS	REV	CK	CCO NO.
2	5/29/09	Added conduits 5387, 5389, 5395, 5397 and 5398	RSB	EJL	113
1	3/13/09	Deleted ckt 2626-1, 2626-2, 2626, 2621-1, 2621-2, 2621 routed inside conduit 5820, 5821, 5822, 5823 and all cables routed inside wireway 22E.	RSB	EJL	65 REV
0	4/30/08	New drawing. Add conduit nos. 5815, 5820, 5821, 5822, 5823 and 5369A. Added cables inside wireway 22E.	ECR	EJL	65

REVISIONS

CONTRACT CHANGE ORDER NO. 113
SHEET 19 OF 20 7/9/09

DETAILS
CONDUIT AND TRAY SCHEDULE

E-230A

CALCULATED/ DESIGNED BY	DATE	REVISED BY	DATE REVISED
ECR	4/08		
CHECKED BY	EJL	5/08	

DESIGN OVERSIGHT
BEHZAD GOLEMOHAMMADI

STATE OF CALIFORNIA - DEPARTMENT OF TRANSPORTATION
Caltrans

LAST REVISION 00-00-00
DATE PLOTTED => 5/29/2009
TIME PLOTTED => 3:31:19 PM

FOR REDUCED PLANS ORIGINAL SCALE IS IN MILLIMETERS 0 20 40 60 80

DGN FILE => T:\13103\MS\pse\DTD-Contract 1\CCO\Electrical\CCO-113 EB Conduit Rack\4012Clua230A-2.dgn
USERNAME => ricafente
CU 04251
EA 0120L1

DIST	COUNTY	ROUTE	KILOMETER POST TOTAL PROJECT	SHEET NO	TOTAL SHEETS
04	Ala	80	1.6/2.7	594 R1	643

REGISTERED ELECTRICAL ENGINEER 05/15/06 DATE

1-29-07
PLANS APPROVAL DATE

REGISTERED PROFESSIONAL ENGINEER JENS ERLINGSSON No. 8249 Exp. 9/30/08 ELECTRICAL STATE OF CALIFORNIA

PB POWER, Inc.
A Parsons Brinckerhoff Company
303 Second St., Suite 700N
San Francisco, CA 94107-1317

The State of California or its officers or agents shall not be responsible for the accuracy or completeness of electronic copies of this plan sheet.

To get to the Caltrans web site, go to http://www.dot.ca.gov

Caltrans Metric

CONDUIT DATA

STRONG MOTION DETECTION SYSTEM

Conduit No	Reference	Size	Type	Total Fill (mm²)	Allowable Fill (mm²)	Cable Area (mm²)	Included Cable No.	Conductor Type
9001	E-174, E-177	27	RGS conduit	0.00	229.03	0.00	Pull Rope 1	Soft-Fiber Polyester
9002	E-174, E-177	41	RGS conduit	0.00	534.55	0.00	Pull Rope 1	Soft-Fiber Polyester
9004	E-174	27	RGS conduit	0.00	229.03	0.00	Pull Rope 1	Soft-Fiber Polyester
9006	E-174	27	RGS conduit	0.00	229.03	0.00	Pull Rope 1	Soft-Fiber Polyester
9008	E-175, E-177	27	RGS conduit	0.00	229.03	0.00	Pull Rope 1	Soft-Fiber Polyester
9011	E-175, E-177	27	RGS conduit	0.00	229.03	0.00	Pull Rope 1	Soft-Fiber Polyester
9012	E-176, E-177	27	RGS conduit	0.00	229.03	0.00	Pull Rope 1	Soft-Fiber Polyester
9013	E-176, E-177	27	RGS conduit	0.00	229.03	0.00	Pull Rope 1	Soft-Fiber Polyester
9020	E-178, E-179	27	RGS conduit	0.00	229.03	0.00	Pull Rope 1	Soft-Fiber Polyester
9021	E-178	27	RGS conduit	0.00	229.03	0.00	Pull Rope 1	Soft-Fiber Polyester
9022	E-178	27	RGS conduit	0.00	229.03	0.00	Pull Rope 1	Soft-Fiber Polyester
9023	E-178	27	RGS conduit	0.00	229.03	0.00	Pull Rope 1	Soft-Fiber Polyester
9024	E-178	27	RGS conduit	0.00	229.03	0.00	Pull Rope 1	Soft-Fiber Polyester
9025	E-174, E-175, E-60, E-61	103	RGS conduit	0.00	3324.51	0.00	Pull Rope 1	Soft-Fiber Polyester
9025A	E-61	103	RGS conduit	0.00	3324.51	0.00	Pull Rope 1	Soft-Fiber Polyester 1
9025B	E-61	103	RGS conduit	0.00	3324.51	0.00	Pull Rope 1	Soft-Fiber Polyester
9026	E-175, E-176, E-61, E-62	103	RGS conduit	0.00	3324.51	0.00	Pull Rope 1	Soft-Fiber Polyester
9027	E-176, E-62	103	RGS conduit	0.00	3324.51	0.00	Pull Rope 1	Soft-Fiber Polyester
9030	E-178	103	RGS conduit	0.00	3324.51	0.00	Pull Rope 1	Soft-Fiber Polyester
9031	E-178	53	RGS conduit	0.00	879.42	0.00	Pull Rope 1	Soft-Fiber Polyester
9032	E-178	53	RGS conduit	0.00	879.42	0.00	Pull Rope 1	Soft-Fiber Polyester
9035	E-178	53	RGS conduit	0.00	879.42	0.00	Pull Rope 1	Soft-Fiber Polyester
9036	E-178	53	RGS conduit	0.00	879.42	0.00	Pull Rope 1	Soft-Fiber Polyester
9037	E-178	53	RGS conduit	0.00	879.42	0.00	Pull Rope 1	Soft-Fiber Polyester
9041	E-178, E-116 E-102	78	RGS conduit	0.00	1935.24	0.00	Pull Rope 1	Soft-Fiber Polyester
9042	E-178, E-116 E-102	78	RGS conduit	0.00	1935.24	0.00	Pull Rope 1	Soft-Fiber Polyester
9043	E-178, E-115	78	RGS conduit	0.00	1935.24	0.00	Pull Rope 1	Soft-Fiber Polyester
9044	E-178, E-115	78	RGS conduit	0.00	1935.24	0.00	Pull Rope 1	Soft-Fiber Polyester
9045	E-178	41	RGS conduit	0.00	534.55	0.00	Pull Rope 1	Soft-Fiber Polyester
9046	E-178	41	RGS conduit	0.00	534.55	0.00	Pull Rope 1	Soft-Fiber Polyester

REGISTERED PROFESSIONAL ENGINEER FADI WALIEDDINE No. 11465 Exp. 12/31/2009 ELECTRICAL STATE OF CALIFORNIA

1

MARK	DATE	DESCRIPTIONS	REV	CK	CCO NO.
1	5/29/09	Added conduits 9025A and 9025B	RSB	EJL	113

REVISIONS

CONTRACT CHANGE ORDER NO. 113
SHEET 20 OF 20 7/9/09

DETAILS
CONDUIT AND TRAY SCHEDULE

E-241

CALCULATED/ DESIGNED BY	DATE 2/06	REVISED BY	DATE REVISED
CHECKED BY	AB	2/06	

DESIGN OVERSIGHT
BEHZAD GOLEMOHAMMADI

STATE OF CALIFORNIA - DEPARTMENT OF TRANSPORTATION
Caltrans

LAST REVISION 00-00-00
DATE PLOTTED => 5/28/2009
TIME PLOTTED => 3:31:42 PM

FOR REDUCED PLANS ORIGINAL SCALE IS IN MILLIMETERS 0 20 40 60 80

DGN FILE =>T:\131C3\MS\pse\CTB-Contract 1\CCO\Electrical\CCO-113 EB Conduit Rack\401201ua241r1.cgn
USERNAME =>r'cofrente CU 04251 EA 0120L1

STATE OF CALIFORNIA - DEPARTMENT OF TRANSPORTATION

CONTRACT CHANGE ORDER MEMORANDUM

DATE: 8/24/2009 Page 1 of 1

TO: AMER BATA / BEN GHAFGHAZI

FROM: BEN GHAFGHAZI

FILE: E.A. 04 - 0120L4
CO-RTE-PM ALA-80-1.6/2.7
FED. NO. NO FED AID

CCO#: 113 | SUPPLEMENT#: 0 | Category Code: CBPC | CONTINGENCY BALANCE (incl. this change) $4,782,821.40

COST: $261,250.00 INCREASE ☑ DECREASE ☐ | HEADQUARTERS APPROVAL REQUIRED? ☑ YES ☐ NO

SUPPLEMENTAL FUNDS PROVIDED: $0.00 | IS THIS REQUEST IN ACCORDANCE WITH ENVIRONMENTAL DOCUMENTS? ☑ YES ☐ NO

CCO DESCRIPTION:
Revise conduit details in bridge EB.

PROJECT DESCRIPTION:
Construct bridge, roadway, building and electrical system.

Original Contract Time:	Time Adj. This Change:	Previously Approved CCO Time Adjustments:	Percentage Time Adjusted: (including this change)	Total # of Unreconciled Deferred Time CCO(s): (including this change)
810 Day(s)	DEF Day(s)	184 Day(s)	23 %	11

THIS CHANGE ORDER PROVIDES FOR:

Modifying conduit routing and racking for Frame 1 of Bridge No. 34-0006R per sheets 2 of 20 through 20 of 20 of this CCO. All work shall be in accordance with Section 10-3, "Signals, Lighting and Electrical Systems," of the Special Provisions and Section 86, "Signals, Lighting and Electrical Systems," of the Standard Specification.

This change is necessary to correct various issues related to electrical conduits in the bridge. The conduit routing is being changed because of conflicts with rebar at pier caps, hinges, and other congested locations as determined from Integrated Shop Drawings (ISDs). The routing changes also require modifications to the conduit racking layout. These changes are being added under CCO as required by Section 5-1.15, "Integrated Shop Drawings," of the Special Provisions. Various other details for conduit installation were omitted from the contract plans and are being added on this CCO.

This work will be paid as Extra Work at Agreed Lump Sum of $236,250.00 and Extra Work at Force Account for $25,000.00. Total cost of this CCO is $261,250.00, which can be financed from the contingency fund.

This change has been discussed and concurred with Jaime Gutierrez of Project Development (memo attached); Parviz Boozarpour of Electrical Design; Ellery Lucas, electrical designer for Parsons Brinkerhoff; Gregory Klein of Electrical Maintenance; Patrick Treacy of Headquarters Construction; Mike Forner, SFOBB Construction Manager; and Ken Terpstra, Project Manager. An Issue and Approve was granted by Headquarters on August 25, 2009.

Adjustment of contract time is deferred pending completion of the work specified in this change as it may affect the controlling operation. Determination of a commensurate time extension will be made in accordance with Section 10-1.14, "Progress Schedule (Critical Path Method)," of the Special Provisions and Section 8-1.07, "Liquidated Damages," of the Standard Specifications.

CONCURRED BY:

Construction Engineer:	Ben Ghafghazi	Date	8/25/09
Bridge Engineer:		Date	
Project Engineer:	Jaime Gutierrez	Date	6/3/09
Project Manager:	Ken Terprstra	Date	7/15/09
FHWA Rep.:		Date	
Environmental:		Date	
Other (specify):	Parviz Boozarpour, Elec. Design	Date	6/3/09
Other (specify):	Greg Klein, Electrical Maint.	Date	7/9/09
District Prior Approval By:	Mike Forner, Principal TE	Date	7/15/09
HQ (Issue Approve) By:	Larry Salhaney	Date	8/25/09
Resident Engineer's Signature:		Date	8/25/09

ESTIMATE OF COST

	THIS REQUEST	TOTAL TO DATE
ITEMS	$0.00	$0.00
FORCE ACCOUNT	$25,000.00	$25,000.00
AGREED PRICE	$236,250.00	$236,250.00
ADJUSTMENT	$0.00	$0.00
TOTAL	$261,250.00	$261,250.00

FEDERAL PARTICIPATION

☐ PARTICIPATING ☐ PARTICIPATING IN PART ☑ NONE
☐ NON-PARTICIPATING (MAINTENANCE) ☐ NON-PARTICIPATING

FEDERAL SEGREGATION (if more than one Funding Source or P.I.P. type)
☑ CCO FUNDED PER CONTRACT ☐ CCO FUNDED AS FOLLOWS

FEDERAL FUNDING SOURCE	PERCENT

ADA Notice: For individuals with sensory disabilities, this document is available in alternate formats. For information call: (916) 654-6410 or TDD (916) 654-3880 or write Records and Forms Management, 1120 N Street, MS-89, Sacramento, CA 95814.

STATE OF CALIFORNIA - DEPARTMENT OF TRANSPORTATION

CONTRACT CHANGE ORDER MEMORANDUM

DATE: 4/6/2010

TO: AMER BATA / BEN GHAFGHAZI

FROM: BEN GHAFGHAZI

FILE: E.A. 04 - 0120L4
CO-RTE-PM ALA-80-1.6/2.7
FED. NO. NO FED AID

CCO#: 113 | SUPPLEMENT#: 1 | Category Code: AFZZ

CONTINGENCY BALANCE (incl. this change) $2,146,116.40

COST: $0.00 INCREASE ☐ DECREASE ☐

HEADQUARTERS APPROVAL REQUIRED? ☑ YES ☐ NO

SUPPLEMENTAL FUNDS PROVIDED: $0.00

IS THIS REQUEST IN ACCORDANCE WITH ENVIRONMENTAL DOCUMENTS? ☑ YES ☐ NO

CCO DESCRIPTION:
Time Adjustment of 0 Days.

PROJECT DESCRIPTION:
Construct bridge, roadway, building and electrical system.

Original Contract Time:	Time Adj. This Change:	Previously Approved CCO Time Adjustments:	Percentage Time Adjusted: (including this change)	Total # of Unreconciled Deferred Time CCO(s): (including this change)
810 Day(s)	0 Day(s)	0 Day(s)	0 %	9

THIS CHANGE ORDER PROVIDES FOR:

A time adjustment of 0 (zero) working days, in accordance with Section 8-1.07, "Liquidated Damages", of the Standard Specifications.

It has been determined that the work of Contract Change Order No. 113 has had no impact on the contractor's controlling operation. Therefore, a time extension of 0 days is recommended.

Total Time Adjustment = 0 Days

CONCURRED BY:

Construction Engineer:	Ben Ghafghazi	Date 4/7/2010
Bridge Engineer:		Date
Project Engineer:		Date
Project Manager:		Date
FHWA Rep.:		Date
Environmental:		Date
Other (specify):		Date
Other (specify):		Date
District Prior Approval By:		Date
HQ (Issue Approve) By:	Larry Salhaney	Date 4/13/2010
Resident Engineer's Signature:		Date 4/7/2010

ESTIMATE OF COST

	THIS REQUEST	TOTAL TO DATE
ITEMS	$0.00	$0.00
FORCE ACCOUNT	$0.00	$25,000.00
AGREED PRICE	$0.00	$236,250.00
ADJUSTMENT	$0.00	$0.00
TOTAL	$0.00	$261,250.00

FEDERAL PARTICIPATION

☐ PARTICIPATING ☐ PARTICIPATING IN PART ☑ NONE
☐ NON-PARTICIPATING (MAINTENANCE) ☐ NON-PARTICIPATING

FEDERAL SEGREGATION (if more than one Funding Source or P.I.P. type)
☑ CCO FUNDED PER CONTRACT ☐ CCO FUNDED AS FOLLOWS

FEDERAL FUNDING SOURCE	PERCENT

ADA Notice: For individuals with sensory disabilities, this document is available in alternate formats. For information call: (916) 654-6410 or TDD (916) 654-3880 or write Records and Forms Management, 1120 N Street, MS-89, Sacramento, CA 95814.

STATE OF CALIFORNIA - DEPARTMENT OF TRANSPORTATION

CONTRACT CHANGE ORDER

Change Requested by: Engineer

CCO: 113	Suppl. No. 1	Contract No. 04 - 0120L4	Road ALA-80-1.6/2.7	FED. AID LOC.: NO FED AID

To: **M C M CONSTRUCTION INC**

You are directed to make the following changes from the plans and specifications or do the following described work not included in the plans and specifications for this contract. ***NOTE: This change order is not effective until approved by the Engineer.***

Description of work to be done, estimate of quantities and prices to be paid. (Segregate between additional work at contract price, agreed price and force account.) Unless otherwise stated, rates for rental of equipment cover only such time as equipment is actually used and no allowance will be made for idle time. This last percentage shown is the net accumulated increase or decrease from the original quantity in the Engineer's Estimate.

TIME ADJUSTMENT:

A determination of the delay in completion of the contract due to the work specified by Contract Change Order No. 113 has been made in accordance with the provisions of Section 8-1.07 of the Standard Specifications.

Time Adjustment = 0 Days

Acceptance of this change order constitutes an agreement of full resolution of all time impact costs resulting from Change Order No. 113.

This change order acts to resolve the deferred time issued on Change Order No. 113, and no additional time shall be granted.

Estimated Cost: Increase ☐ **Decrease** ☐ **$0.00**

By reason of this order the time of completion will be adjusted as follows: 0 days

Signature	~~**Resident Engineer**~~ Ben Ghafghazi	**Date** 4/7/2010
Signature	**Construction Manager** Amer Bata	**Date** 4/8/2010
Signature	**Construction Manager** Amer Bata	**Date** 7/14/10

We the undersigned contractor, have given careful consideration to the change proposed and agree, if this proposal is approved, that we will provide all equipment, furnish the materials, except as may otherwise be noted above, and perform all services necessary for the work above specified, and will accept as full payment therefor the prices shown above.

NOTE: If you, the contractor, do not sign acceptance of this order, your attention is directed to the requirements of the specifications as to proceeding with the ordered work and filing a written protest within the time therein specified.

Signature	**(Print name and title)** JAMES A. CARTER, PRESIDENT	**Date** 7/14/10

STATE OF CALIFORNIA - DEPARTMENT OF TRANSPORTATION

CONTRACT CHANGE ORDER

Change Requested by: Engineer

CCO 114	Suppl. No. 0	Contract No. 04 - 0120L4	Road ALA-80-1.6/2.7	FED. AID LOC.: NO FED AID

M C M CONSTRUCTION INC

You are directed to make the following changes from the plans and specifications or do the following described work not included in the plans and specifications for this contract. ***NOTE: This change order is not effective until approved by the Engineer.***

Description of work to be done, estimate of quantities and prices to be paid. (Segregate between additional work at contract price, agreed price and force account.) Unless otherwise stated, rates for rental of equipment cover only such time as equipment is actually used and no allowance will be made for idle time. This last percentage shown is the net accumulated increase or decrease from the original quantity in the Engineer's Estimate.

Compensate fabricator of demonstration light poles for State requested modifications made to poles during fabrication.

Extra Work at Lump Sum:

Provide labor, equipment, and materials required to complete fabrication of the four (4) demonstration lighting poles at Stratus Products facility in Fort Worth, Texas as follows:

1. Structural and mechanical strapping for conduit runs.
2. Furnish and install 1.5" coated GRC.
3. Furnish and install fitting for 1.5" GRC.
4. Furnish and install J-box split for power between incoming power and marker light.
5. Furnish and install breaker switch for marker light.
6. Furnish and install conduit for roadway light fixtures.
7. Furnish revised starter wall steel (prototype 2) bent design.
8. Furnish revised started wall (prototype 1) welded design.
9. Furnish and install QTY (2) test adapter bases for demonstration structure.
10. Crane rental to erect demonstration structure.
11. Labor for revised starter wall (prototype 2) bent design.
12. Labor for mounting roadway lighting fixtures.
13. Labor for one sharpened edge (welded design).
14. Labor to mount beacon lights.
15. Labor to paint roadway lighting fixtures.

All work shall be in accordance with Section 10-3, "Signals, Lighting and Electrical Systems," of the Special Provisions and Section 86, "Signals, Lighting and Electrical Systems," of the Standard Specifications. For this work, the contractor will be paid the sum of $ 109,062.00. This sum constitutes full and complete compensation, including all markups for this change.

Extra Work at Agreed Lump Sum $109,062.00

Estimated Cost: Increase ☑ **Decrease** ☐ **$109,062.00**

By reason of this order the time of completion will be adjusted as follows: 0 days

Submitted by

Signature	Resident Engineer BEN GHAFGHAZI	Date 5/29/09

Approval Recommended By

Signature	Construction Engineer Ben Ghafghazi	Date 5/29/09

Engineer Approval by

Signature	Construction Manager Amer Bata	Date 6/1/09

We the undersigned contractor, have given careful consideration to the change proposed and agree, if this proposal is approved, that we will provide all equipment, furnish the materials, except as may otherwise be noted above, and perform all services necessary for the work above specified, and will accept as full payment therefor the prices shown above.

NOTE: If you, the contractor, do not sign acceptance of this order, your attention is directed to the requirements of the specifications as to proceeding with the ordered work and filing a written protest within the time therein specified.

Contractor Acceptance by

Signature	(Print name and title) EDMUNDO A. IUCHI, TREASURER	Date 6/1/09

STATE OF CALIFORNIA - DEPARTMENT OF TRANSPORTATION

CONTRACT CHANGE ORDER MEMORANDUM

TO: AMER BATA / BEN GHAFGHAZI	FILE: **E.A.** 04 - 0120L4
FROM: BEN GHAFGHAZI	**CO-RTE-PM** ALA-80-1.6/2.7
	FED. NO. NO FED AID
CCO#: **114** SUPPLEMENT#: **0** Category Code: **CBPC**	CONTINGENCY BALANCE (incl. this change) **$7,000,768.20**
COST: **$109,062.00** INCREASE ☑ DECREASE ☐	HEADQUARTERS APPROVAL REQUIRED? ☐ YES ☑ NO
SUPPLEMENTAL FUNDS PROVIDED: **$0.00**	IS THIS REQUEST IN ACCORDANCE WITH ENVIRONMENTAL DOCUMENTS? ☑ YES ☐ NO
CCO DESCRIPTION: Modify demonstration poles at fabricator	**PROJECT DESCRIPTION:** Construct bridge, roadway, building and electrical system.

Original Contract Time:	Time Adj. This Change:	Previously Approved CCO Time Adjustments:	Percentage Time Adjusted: (including this change)	Total # of Unreconciled Deferred Time CCO(s): (including this change)
810 Day(s)	**0** Day(s)	**184** Day(s)	**23** %	**10**

THIS CHANGE ORDER PROVIDES FOR:

Compensation for 15 fabrication related issues for the four (4) demonstration light poles provided under Item No. 181, Roadway Lighting Assembly," and previously issued CCO No. 39, which increased the poles from 3 to 4 and added a brake bent pole in addition to the welded pole per the original contract. Fabrication issues were not addressed in CCO No. 39 (copy attached for reference). These poles are to be installed during the Oakland Touchdown project on the already completed Skyway.

This change is necessary to complete the design of the poles and to make the poles more serviceable. Caltrans construction, maintenance and design personnel directed the work by the fabricator (Stratus Products) in Fort Worth TX during a series of site visits and meetings. The additional directed work was as follows:

1. Structural and mechanical strapping for conduit runs.
2. Furnish and install 1.5" coated GRC.
3. Furnish and install fitting for 1.5" GRC.
4. Furnish and install J-box split for power between incoming power and marker light.
5. Furnish and install breaker switch for marker light.
6. Furnish and install conduit for roadway light fixtures.
7. Furnish revised starter wall steel (prototype 2) bent design.
8. Furnish revised started wall (prototype 1) welded design.
9. Furnish and install QTY (2) test adapter bases for demonstration structure.
10. Crane rental to erect demonstration structure.
11. Labor for revised starter wall (prototype 2) bent design.
12. Labor for mounting roadway lighting fixtures.
13. Labor for one sharpened edge (welded design).
14. Labor to mount beacon lights.
15. Labor to paint roadway lighting fixtures.

There will be one pole chosen from the four as a prototype for a subsequent contract to supply all the poles for the bridge. It is important that the prototypes be delivered in a timely manner in order to make the selection. To mitigate the possibility of delay, the Department directed this work in Fort Worth so the four (4) poles could be complete units prior to shipping. This way, if mechanical problems were discovered, they could be repaired prior to shipment.

This work will be paid as Extra Work at Agreed Lump Sum of $109,062.00, which can be financed from the contingency fund. All corresponding credits have been considered when pricing this CCO. A detailed cost analysis is on file in the Resident Engineer's office.

This change has been discussed and concurred with Steven Hulsebus, Chief Toll Bridge Design; Mike Forner, SFOBB Construction Manager; Greg Klein Electrical Maintenance Regional Manager; and Ken Terpstra, Project Manager.

No adjustment of the contract time is warranted, as this change does not affect the controlling operation.

ADA Notice: For individuals with sensory disabilities, this document is available in alternate formats. For information call: (916) 654-6410 or TDD (916) 654-3880 or write Records and Forms Management, 1120 N Street, MS-89, Sacramento, CA 95814.

CONCURRED BY:			
Construction Engineer:	Ben Ghafghazi	Date	6/11/09
Bridge Engineer:		Date	
Project Engineer:	Steven Hulsebus	Date	5/28/09
Project Manager:	Ken Terprstra, Chief Toll Design	Date	5/28/09
FHWA Rep.:		Date	
Environmental:		Date	
Other (specify):	Greg Klein, Electrical Maint.	Date	5/28/09
Other (specify):		Date	
District Prior Approval By:	Mike Fomer, Principal TE	Date	5/28/09
HQ (Issue Approve) By:		Date	
Resident Engineer's Signature:		Date	6/11/09

ESTIMATE OF COST

	THIS REQUEST	TOTAL TO DATE
ITEMS	$0.00	$0.00
FORCE ACCOUNT	$0.00	$0.00
AGREED PRICE	$109,062.00	$109,062.00
ADJUSTMENT	$0.00	$0.00
TOTAL	$109,062.00	$109,062.00

FEDERAL PARTICIPATION

☐ PARTICIPATING ☐ PARTICIPATING IN PART ☐ NONE
☐ NON-PARTICIPATING (MAINTENANCE) ☐ NON-PARTICIPATING

FEDERAL SEGREGATION (if more than one Funding Source or P.I.P. type)
☐ CCO FUNDED PER CONTRACT ☐ CCO FUNDED AS FOLLOWS

FEDERAL FUNDING SOURCE	PERCENT

ADA Notice: For individuals with sensory disabilities, this document is available in alternate formats. For information call: (916) 654-6410 or TDD (916) 654-3880 or write Records and Forms Management, 1120 N Street, MS-89, Sacramento, CA 95814.

STATE OF CALIFORNIA - DEPARTMENT OF TRANSPORTATION

CONTRACT CHANGE ORDER

Change Requested by: Engineer

CCO 115	Suppl. No. 0	Contract No. 04 - 0120L4	Road ALA-80-1.6/2.7	FED. AID LOC.: NO FED AID

M C M CONSTRUCTION INC

You are directed to make the following changes from the plans and specifications or do the following described work not included in the plans and specifications for this contract. ***NOTE: This change order is not effective until approved by the Engineer.***

Description of work to be done, estimate of quantities and prices to be paid. (Segregate between additional work at contract price, agreed price and force account.) Unless otherwise stated, rates for rental of equipment cover only such time as equipment is actually used and no allowance will be made for idle time. This last percentage shown is the net accumulated increase or decrease from the original quantity in the Engineer's Estimate.

Extra Work at Force Account:

Provide additional water pollution control measures as determined necessary by the Engineer. All work shall be in accordance with the appropriate sections of the Special Provisions.

Estimated cost of Extra Work at Force Account $100,000.00

Estimated Cost: Increase ☑ Decrease ☐ $100,000.00

By reason of this order the time of completion will be adjusted as follows: 0 days

Submitted by

Signature	Resident Engineer BEN GHAFGHAZI	Date 6/16/09

Approval Recommended by

Signature	Construction Engineer Ben Ghafghazi	Date 6/16/09

Engineer Approval by

Signature	Construction Manager Amer Bata	Date 6/29/09

We the undersigned contractor, have given careful consideration to the change proposed and agree, if this proposal is approved, that we will provide all equipment, furnish the materials, except as may otherwise be noted above, and perform all services necessary for the work above specified, and will accept as full payment therefor the prices shown above.

NOTE: If you, the contractor, do not sign acceptance of this order, your attention is directed to the requirements of the specifications as to proceeding with the ordered work and filing a written protest within the time therein specified.

Contractor Acceptance by

Signature	(Print name and title) EDMUNDO A. PUCHI, TREASURER	Date 6/24/09

STATE OF CALIFORNIA - DEPARTMENT OF TRANSPORTATION

CONTRACT CHANGE ORDER MEMORANDUM

DATE: 6/1/2009 Page 1 of 1

TO: AMER BATA / BEN GHAFGHAZI	FILE: E.A. 04 - 0120L4
FROM: BEN GHAFGHAZI	CO-RTE-PM ALA-80-1.6/2.7
	FED. NO. NO FED AID
CCO#: 115 SUPPLEMENT#: 0 Category Code: CXSA	CONTINGENCY BALANCE (incl. this change) $6,228,534.20
COST: $100,000.00 INCREASE ☑ DECREASE ☐	HEADQUARTERS APPROVAL REQUIRED? ☐ YES ☑ NO
SUPPLEMENTAL FUNDS PROVIDED: $0.00	IS THIS REQUEST IN ACCORDANCE WITH ENVIRONMENTAL DOCUMENTS? ☑ YES ☐ NO
CCO DESCRIPTION: Additional SWPPP.	**PROJECT DESCRIPTION:** Construct bridge, roadway, building and electrical system.

Original Contract Time:	Time Adj. This Change:	Previously Approved CCO Time Adjustments:	Percentage Time Adjusted: (including this change)	Total # of Unreconciled Deferred Time CCO(s): (including this change)
810 Day(s)	0 Day(s)	184 Day(s)	23 %	10

THIS CHANGE ORDER PROVIDES FOR:

Additional Water Pollution Control Measures above and beyond the requirements of Section 10-1.03, "Water Pollution Control," of the Special Provisions throughout the project site as directed by the Engineer.

This change is necessary to enhance Caltrans' monitoring of environmental issues. This contract is highly visible to the public and outside agencies. Because of the complex nature of the work, the proximity to San Francisco Bay, and sensitive environmental location, it is necessary to provide additional pollution control measures to comply with the numerous and additional requirements and amendments to the SWPPP which have been required by District Environmental Division, Headquarters Environmental Division, and Regional Water Quality Control Board (RWQCB). This CCO is only for work that is above and beyond the reasonable requirements of the Special Provisions. This additional work shall be performed on a continuous basis and more funds may be required at a later date.

This change order was discussed and concurrence was received in a meeting with the Project Manger, Ken Terpstra, on May 27, 2009. Design and Maintenance concurrence is not necessary because this work is temporary.

This work will be paid as Extra Work at Force Account for $100,000.00, which can be financed from the contingency fund. A cost analysis is on file.

No adjustment of contract time is warranted since this change does not affect the controlling operation.

CONCURRED BY:		
Construction Engineer:	Ben Ghafghazi	Date 6/16/09
Bridge Engineer:		Date
Project Engineer:		Date
Project Manager:	Ken Terprstra	Date 5/27/09
FHWA Rep.:		Date
Environmental:		Date
Other (specify):		Date
Other (specify):		Date
District Prior Approval By:		Date
HQ (Issue Approve) By:		Date
Resident Engineer's Signature:		Date 6/16/09

ESTIMATE OF COST

	THIS REQUEST	TOTAL TO DATE
ITEMS	$0.00	$0.00
FORCE ACCOUNT	$100,000.00	$100,000.00
AGREED PRICE	$0.00	$0.00
ADJUSTMENT	$0.00	$0.00
TOTAL	$100,000.00	$100,000.00

FEDERAL PARTICIPATION

☐ PARTICIPATING ☐ PARTICIPATING IN PART ☑ NONE
☐ NON-PARTICIPATING (MAINTENANCE) ☐ NON-PARTICIPATING

FEDERAL SEGREGATION (if more than one Funding Source or P.I.P. type)
☑ CCO FUNDED PER CONTRACT ☐ CCO FUNDED AS FOLLOWS

FEDERAL FUNDING SOURCE	PERCENT

ADA Notice: For individuals with sensory disabilities, this document is available in alternate formats. For information call: (916) 654-6410 or TDD (916) 654-3880 or write Records and Forms Management, 1120 N Street, MS-89, Sacramento, CA 95814.

STATE OF CALIFORNIA - DEPARTMENT OF TRANSPORTATION

CONTRACT CHANGE ORDER MEMORANDUM

DATE: 8/4/2009 Page 1 of 1

TO: AMER BATA / BEN GHAFGHAZI

FROM: BEN GHAFGHAZI

FILE: E.A. 04 - 0120L4
CO-RTE-PM ALA-80-1.6/2.7
FED. NO. NO FED AID

CCO#: 115 SUPPLEMENT#: 1 Category Code: CXSA

CONTINGENCY BALANCE (incl. this change) $4,782,821.40

COST: $300,000.00 INCREASE ☑ DECREASE ☐

HEADQUARTERS APPROVAL REQUIRED? ☑ YES ☐ NO

SUPPLEMENTAL FUNDS PROVIDED: $0.00

IS THIS REQUEST IN ACCORDANCE WITH ENVIRONMENTAL DOCUMENTS? ☑ YES ☐ NO

CCO DESCRIPTION:
Additional SWPPP.

PROJECT DESCRIPTION:
Construct bridge, roadway, building and electrical system.

Original Contract Time:	Time Adj. This Change:	Previously Approved CCO Time Adjustments:	Percentage Time Adjusted: (including this change)	Total # of Unreconciled Deferred Time CCO(s): (including this change)
810 Day(s)	0 Day(s)	184 Day(s)	23 %	10

THIS CHANGE ORDER PROVIDES FOR:
Additional funds for Water Pollution Control Measures above and beyond the requirements of Section 10-1.03, "Water Pollution Control," of the Special Provisions throughout the project site as directed by the Engineer.

This change is necessary to enhance Caltrans' monitoring of environmental issues. This contract is highly visible to the public and outside agencies. Because of the complex nature of the work, the proximity to San Francisco Bay, and sensitive environmental location, it is necessary to provide additional pollution control measures to comply with the numerous and additional requirements and amendments to the SWPPP which have been required by District Environmental Division, Headquarters Environmental Division, and Regional Water Quality Control Board (RWQCB). This CCO is only for work that is above and beyond the reasonable requirements of the Special Provisions. Based on work performed to date it is anticipated that an additional $300,000.00 is required through the completion of the contract. This work is being performed on a continuous basis and more funds may be required at a later date.

This change order was discussed and concurred with Patrick Treacy, HQ Construction Coordinator; Mike Forner, SFOBB Construction Manager; and Ken Terpstra, Project Manager. An Issue and Approve was granted by Headquarters on August 26, 2009. Design and Maintenance concurrence is not necessary because this work is temporary.

This work will be paid as Extra Work at Force Account for $300,000.00, which can be financed from the contingency fund. A cost analysis is on file.

No adjustment of contract time is warranted since this change does not affect the controlling operation.

CONCURRED BY:

Construction Engineer:	Ben Ghafghazi	Date	8/27/09
Bridge Engineer:		Date	
Project Engineer:		Date	
Project Manager:	Ken Terprstra	Date	8/24/09
FHWA Rep.:		Date	
Environmental:		Date	
Other (specify):	Patrick Treacy, HQ Const. Coord.	Date	8/24/09
Other (specify):		Date	
District Prior Approval By:	Mike Forner, Principal TE	Date	8/24/09
HQ (Issue Approve) By:	Larry Salhaney	Date	8/26/09
Resident Engineer's Signature:		Date	8/27/09

ESTIMATE OF COST

	THIS REQUEST	TOTAL TO DATE
ITEMS	$0.00	$0.00
FORCE ACCOUNT	$300,000.00	$400,000.00
AGREED PRICE	$0.00	$0.00
ADJUSTMENT	$0.00	$0.00
TOTAL	$300,000.00	$400,000.00

FEDERAL PARTICIPATION

☐ PARTICIPATING ☐ PARTICIPATING IN PART ☑ NONE
☐ NON-PARTICIPATING (MAINTENANCE) ☐ NON-PARTICIPATING

FEDERAL SEGREGATION (if more than one Funding Source or P.I.P. type)
☑ CCO FUNDED PER CONTRACT ☐ CCO FUNDED AS FOLLOWS

FEDERAL FUNDING SOURCE PERCENT

ADA Notice: For individuals with sensory disabilities, this document is available in alternate formats. For information call: (916) 654-6410 or TDD (916) 654-3880 or write Records and Forms Management, 1120 N Street, MS-89, Sacramento, CA 95814.

STATE OF CALIFORNIA - DEPARTMENT OF TRANSPORTATION

CONTRACT CHANGE ORDER

Change Requested by: Engineer

CCO 115 **Suppl. No.** 1 **Contract No.** 04 - 0120L4 **Road** ALA-80-1.6/2.7 **FED. AID LOC.:** NO FED AID

To: **M C M CONSTRUCTION INC**

You are directed to make the following changes from the plans and specifications or do the following described work not included in the plans and specifications for this contract. ***NOTE: This change order is not effective until approved by the Engineer.***

Description of work to be done, estimate of quantities and prices to be paid. (Segregate between additional work at contract price, agreed price and force account.) Unless otherwise stated, rates for rental of equipment cover only such time as equipment is actually used and no allowance will be made for idle time. This last percentage shown is the net accumulated increase or decrease from the original quantity in the Engineer's Estimate.

Additional funds for water pollution control measures.

Extra Work at Force Account:

Provide additional water pollution control measures as determined necessary by the Engineer. All work shall be in accordance with the appropriate sections of the Special Provisions.

Estimated cost of Extra Work at Force Account $300,000.00

Estimated Cost: **Increase** ☑ **Decrease** ☐ **$300,000.00**

By reason of this order the time of completion will be adjusted as follows: 0 days

Signature	**Resident Engineer** BEN GHAFGHAZI	**Date** 8/21/09
Signature	**Construction Manager** Amer Bata	**Date** 8/24/09
Signature	**Construction Manager** Amer Bata	**Date** 8/27/09

We the undersigned contractor, have given careful consideration to the change proposed and agree, if this proposal is approved, that we will provide all equipment, furnish the materials, except as may otherwise be noted above, and perform all services necessary for the work above specified, and will accept as full payment therefor the prices shown above.

NOTE: If you, the contractor, do not sign acceptance of this order, your attention is directed to the requirements of the specifications as to proceeding with the ordered work and filing a written protest within the time therein specified.

Signature N/A	**(Print name and title)**	**Date**

STATE OF CALIFORNIA - DEPARTMENT OF TRANSPORTATION

CONTRACT CHANGE ORDER MEMORANDUM

DATE: 10/5/2009 Page 1 of 1

TO: AMER BATA / BEN GHAFGHAZI

FROM: BEN GHAFGHAZI

FILE: E.A. 04 - 0120L4
CO-RTE-PM ALA-80-1.6/2.7
FED. NO. NO FED AID

CCO#: 115 | SUPPLEMENT#: 2 | Category Code: CXSA

CONTINGENCY BALANCE (incl. this change) $4,335,294.40

COST: $200,000.00 INCREASE ☑ DECREASE ☐

HEADQUARTERS APPROVAL REQUIRED? ☑ YES ☐ NO

SUPPLEMENTAL FUNDS PROVIDED: $0.00

IS THIS REQUEST IN ACCORDANCE WITH ENVIRONMENTAL DOCUMENTS? ☑ YES ☐ NO

CCO DESCRIPTION:
Additional SWPPP.

PROJECT DESCRIPTION:
Construct bridge, roadway, building and electrical system.

Original Contract Time:	Time Adj. This Change:	Previously Approved CCO Time Adjustments:	Percentage Time Adjusted: (including this change)	Total # of Unreconciled Deferred Time CCO(s): (including this change)
810 Day(s)	0 Day(s)	184 Day(s)	23 %	12

THIS CHANGE ORDER PROVIDES FOR:
Additional funds for Water Pollution Control Measures above and beyond the requirements of Section 10-1.03, "Water Pollution Control," of the Special Provisions throughout the project site as directed by the Engineer.

This change is necessary to enhance Caltrans' monitoring of environmental issues. This contract is highly visible to the public and outside agencies. Because of the complex nature of the work, the proximity to San Francisco Bay, and sensitive environmental location, it is necessary to provide additional pollution control measures to comply with the numerous and additional requirements and amendments to the SWPPP which have been required by District Environmental Division, Headquarters Environmental Division, and Regional Water Quality Control Board (RWQCB). This CCO is only for work that is above and beyond the reasonable requirements of the Special Provisions. CCO No. 115 Supplement 1 was previously issued for $300,000.00 to pay for this work. Based on work performed to date it is anticipated that an additional $200,000.00 is required through the completion of the contract. This work is being performed on a continuous basis and more funds may be required at a later date.

This change order was discussed and concurred with Patrick Treacy, HQ Construction Coordinator; Amer Bata, acting for Mike Forner, SFOBB Construction Manager; and Ken Terpstra, Project Manager. An Issue and Approve was granted by Headquarters on October 21, 2009. Design and Maintenance concurrence is not necessary because this work is temporary.

This work will be paid as Extra Work at Force Account for $200,000.00, which can be financed from the contingency fund. A cost analysis is on file.

No adjustment of contract time is warranted since this change does not affect the controlling operation.

CONCURRED BY:

Construction Engineer:	Ben Ghafghazi	Date 11/11/09
Bridge Engineer:		Date
Project Engineer:		Date
Project Manager:	Ken Terprstra	Date 10/20/09
FHWA Rep.:		Date
Environmental:		Date
Other (specify):	Patrick Treacy, HQ Const. Coord.	Date 10/13/09
Other (specify):		Date
District Prior Approval By:	A. Bata for M.Forner, Prin. TE	Date 10/6/09
HQ (Issue Approve) By:	Bob Molera	Date 10/21/09
Resident Engineer's Signature:		Date 11/11/09

ESTIMATE OF COST

	THIS REQUEST	TOTAL TO DATE
ITEMS	$0.00	$0.00
FORCE ACCOUNT	$200,000.00	$600,000.00
AGREED PRICE	$0.00	$0.00
ADJUSTMENT	$0.00	$0.00
TOTAL	$200,000.00	$600,000.00

FEDERAL PARTICIPATION

☐ PARTICIPATING ☐ PARTICIPATING IN PART ☑ NONE
☐ NON-PARTICIPATING (MAINTENANCE) ☐ NON-PARTICIPATING

FEDERAL SEGREGATION (if more than one Funding Source or P.I.P. type)
☑ CCO FUNDED PER CONTRACT ☐ CCO FUNDED AS FOLLOWS

FEDERAL FUNDING SOURCE PERCENT

ADA Notice: For individuals with sensory disabilities, this document is available in alternate formats. For information call: (916) 654-6410 or TDD (916) 654-3880 or write Records and Forms Management, 1120 N Street, MS-89, Sacramento, CA 95814.

CONTRACT CHANGE ORDER

Change Requested by: Engineer

CCO 115	Suppl. No. 2	Contract No. 04 - 0120L4	Road ALA-80-1.6/2.7	FED. AID LOC.: NO FED AID

To: **M C M CONSTRUCTION INC**

You are directed to make the following changes from the plans and specifications or do the following described work not included in the plans and specifications for this contract. ***NOTE: This change order is not effective until approved by the Engineer.***

Description of work to be done, estimate of quantities and prices to be paid. (Segregate between additional work at contract price, agreed price and force account.) Unless otherwise stated, rates for rental of equipment cover only such time as equipment is actually used and no allowance will be made for idle time. This last percentage shown is the net accumulated increase or decrease from the original quantity in the Engineer's Estimate.

Additional funds for water pollution control measures.

Extra Work at Force Account:

Provide additional water pollution control measures as determined necessary by the Engineer. All work shall be in accordance with the appropriate sections of the Special Provisions.

Estimated cost of Extra Work at Force Account $200,000.00

Estimated Cost: Increase ☑ **Decrease** ☐ **$200,000.00**

By reason of this order the time of completion will be adjusted as follows: 0 days

Signature	**Resident Engineer** BEN GHAFGHAZI	**Date** 10/6/09
Signature	**Construction Manager** Amer Bata	**Date** 10/6/09
Signature	**Construction Manager** Amer Bata	**Date** 10/26/09

We the undersigned contractor, have given careful consideration to the change proposed and agree, if this proposal is approved, that we will provide all equipment, furnish the materials, except as may otherwise be noted above, and perform all services necessary for the work above specified, and will accept as full payment therefor the prices shown above.

NOTE: If you, the contractor, do not sign acceptance of this order, your attention is directed to the requirements of the specifications as to proceeding with the ordered work and filing a written protest within the time therein specified.

Signature N/A	**(Print name and title)**	**Date**

STATE OF CALIFORNIA - DEPARTMENT OF TRANSPORTATION

CONTRACT CHANGE ORDER MEMORANDUM

DATE: 3/4/2010

TO: AMER BATA / BEN GHAFGHAZI	FILE: E.A. 04 - 0120L4
FROM: BEN GHAFGHAZI	CO-RTE-PM ALA-80-1.6/2.7
	FED. NO. NO FED AID
CCO#: 115 SUPPLEMENT#: 3 Category Code: CXSA	CONTINGENCY BALANCE (incl. this change) $2,867,792.40
COST: $200,000.00 INCREASE ☑ DECREASE ☐	HEADQUARTERS APPROVAL REQUIRED? ☑ YES ☐ NO
SUPPLEMENTAL FUNDS PROVIDED: $0.00	IS THIS REQUEST IN ACCORDANCE WITH ENVIRONMENTAL DOCUMENTS? ☑ YES ☐ NO
CCO DESCRIPTION: Additional SWPPP.	**PROJECT DESCRIPTION:** Construct bridge, roadway, building and electrical system.

Original Contract Time:	Time Adj. This Change:	Previously Approved CCO Time Adjustments:	Percentage Time Adjusted: (including this change)	Total # of Unreconciled Deferred Time CCO(s): (including this change)
810 Day(s)	0 Day(s)	184 Day(s)	23 %	15

THIS CHANGE ORDER PROVIDES FOR:

Additional funds for Water Pollution Control Measures above and beyond the requirements of Section 10-1.03, "Water Pollution Control," of the Special Provisions throughout the project site as directed by the Engineer.

This change is necessary to enhance Caltrans' monitoring of environmental issues. This contract is highly visible to the public and outside agencies. Because of the complex nature of the work, the proximity to San Francisco Bay, and sensitive environmental location, it is necessary to provide additional pollution control measures to comply with the numerous and additional requirements and amendments to the SWPPP which have been required by District Environmental Division, Headquarters Environmental Division, and Regional Water Quality Control Board (RWQCB). This CCO is only for work that is above and beyond the reasonable requirements of the Special Provisions. CCO No. 115 Supplement 1 was previously issued for $300,000.00 to pay for this work, and CCO 115 Supplement 2 was subsequently issued for $200,000.00. Based on the actual work performed to date, funds provided in CCO 115 Supplement 2 has been determined to be not enough to perform this work through the completion of the contract. It is anticipated that an additional $200,000.00 is required through the completion of the contract.

This change order was discussed and concurred with Patrick Treacy, HQ Construction Coordinator; Mike Forner, SFOBB Principal TE; and Ken Terpstra, Project Manager. An Issue and Approve was granted by Headquarters on 03/09/10. Design and Maintenance concurrence is not necessary because this work is temporary.

This work will be paid as Extra Work at Force Account for $200,000.00, which can be financed from the contingency fund. A cost analysis is on file at the Resident Engineer's office.

No adjustment of contract time is warranted since this change does not affect the controlling operation.

CONCURRED BY:

Construction Engineer:	Ben Ghafghazi	Date 3/10/2010
Bridge Engineer:		Date
Project Engineer:		Date
Project Manager:		Date
FHWA Rep.:		Date
Environmental:		Date
Other (specify):	Patrick Treacy, HQ Const. Coord.	Date 3/7/10
Other (specify):		Date
District Prior Approval By:	Mike Forner, Principal TE	Date 3/4/10
HQ (Issue Approve) By:		Date
Resident Engineer's Signature:		Date 3/10/2010

ESTIMATE OF COST

	THIS REQUEST	TOTAL TO DATE
ITEMS	$0.00	$0.00
FORCE ACCOUNT	$200,000.00	$800,000.00
AGREED PRICE	$0.00	$0.00
ADJUSTMENT	$0.00	$0.00
TOTAL	$200,000.00	$800,000.00

FEDERAL PARTICIPATION

☐ PARTICIPATING ☐ PARTICIPATING IN PART ☑ NONE
☐ NON-PARTICIPATING (MAINTENANCE) ☐ NON-PARTICIPATING

FEDERAL SEGREGATION (if more than one Funding Source or P.I.P. type)
☑ CCO FUNDED PER CONTRACT ☐ CCO FUNDED AS FOLLOWS

FEDERAL FUNDING SOURCE	PERCENT

ADA Notice: For individuals with sensory disabilities, this document is available in alternate formats. For information call: (916) 654-6410 or TDD (916) 654-3880 or write Records and Forms Management, 1120 N Street, MS-89, Sacramento, CA 95814.

STATE OF CALIFORNIA - DEPARTMENT OF TRANSPORTATION

CONTRACT CHANGE ORDER

Change Requested by: Engineer

CCO: 115	Suppl. No. 3	Contract No. 04 - 0120L4	Road ALA-80-1.6/2.7	FED. AID LOC.: NO FED AID

To: **M C M CONSTRUCTION INC**

You are directed to make the following changes from the plans and specifications or do the following described work not included in the plans and specifications for this contract. ***NOTE: This change order is not effective until approved by the Engineer.***

Description of work to be done, estimate of quantities and prices to be paid. (Segregate between additional work at contract price, agreed price and force account.) Unless otherwise stated, rates for rental of equipment cover only such time as equipment is actually used and no allowance will be made for idle time. This last percentage shown is the net accumulated increase or decrease from the original quantity in the Engineer's Estimate.

Extra Work at Force Account:

Provide additional water pollution control measures as determined necessary by the Engineer. All work shall be in accordance with the appropriate sections of the Special Provisions.

Estimated cost of Extra Work at Force Account $200,000.00

Estimated Cost: **Increase** ☑ **Decrease** ☐ **$200,000.00**

By reason of this order the time of completion will be adjusted as follows: 0 days

Signature	**Resident Engineer** BEN GHAFGHAZI	**Date** 3/4/2010
Signature	**Construction Manager** Amer Bata	**Date** 3/4/2010
Signature	**Construction Manager** Amer Bata	**Date** 3/10/2010

We the undersigned contractor, have given careful consideration to the change proposed and agree, if this proposal is approved, that we will provide all equipment, furnish the materials, except as may otherwise be noted above, and perform all services necessary for the work above specified, and will accept as full payment therefor the prices shown above.

NOTE: If you, the contractor, do not sign acceptance of this order, your attention is directed to the requirements of the specifications as to proceeding with the ordered work and filing a written protest within the time therein specified.

Signature	**(Print name and title)**	**Date**

STATE OF CALIFORNIA - DEPARTMENT OF TRANSPORTATION

CONTRACT CHANGE ORDER MEMORANDUM

DATE: 9/1/2010

TO: AMER BATA / BEN GHAFGHAZI	FILE: E.A. 04 - 0120L4
FROM: BEN GHAFGHAZI	CO-RTE-PM ALA-80-1.6/2.7
	FED. NO. NO FED AID
CCO#: 115 SUPPLEMENT#: 4 Category Code: CXSA	CONTINGENCY BALANCE (incl. this change): $867,347.90
COST: $30,000.00 INCREASE ☑ DECREASE ☐	HEADQUARTERS APPROVAL REQUIRED? ☑ YES ☐ NO
SUPPLEMENTAL FUNDS PROVIDED: $0.00	IS THIS REQUEST IN ACCORDANCE WITH ENVIRONMENTAL DOCUMENTS? ☑ YES ☐ NO
CCO DESCRIPTION:	**PROJECT DESCRIPTION:** Construct bridge, roadway, building and electrical system.

Original Contract Time:	Time Adj. This Change:	Previously Approved CCO Time Adjustments:	Percentage Time Adjusted: (including this change)	Total # of Unreconciled Deferred Time CCO(s): (including this change)
810 Day(s)	0 Day(s)	0 Day(s)	0 %	0

THIS CHANGE ORDER PROVIDES FOR:

Additional funds for Water Pollution Control Measures above and beyond the requirements of Section 10-1.03, "Water Pollution Control," of the Special Provisions throughout the project site as directed by the Engineer.

This change is necessary to enhance Caltrans' monitoring of environmental issues. This contract is highly visible to the public and outside agencies. Because of the complex nature of the work, the proximity to San Francisco Bay, and sensitive environmental location, it is necessary to provide additional pollution control measures to comply with the numerous and additional requirements and amendments to the SWPPP which have been required by District Environmental Division, Headquarters Environmental Division, and Regional Water Quality Control Board (RWQCB). This CCO is only for work that is above and beyond the reasonable requirements of the Special Provisions. CCO No. 115 Supplement 1 was previously issued for $300,000.00 to pay for this work, CCO 115 Supplement 2 was subsequently issued for $200,000.00, and CCO 115 Supplement 3 for $200,000.00. Based on the actual work performed to date, funds provided in CCO 115 Supplement 3 has been determined to be not enough to perform this work through the completion of the contract. It is anticipated that an additional $30,000.00 is required through the completion of the contract.

This change order was discussed and concurred with Patrick Treacy, HQ Construction Coordinator; Mike Forner, SFOBB Principal TE; and Ken Terpstra, Project Manager. An Issue and Approve was granted by Headquarters on 03/09/10. Design and Maintenance concurrence is not necessary because this work is temporary.

This work will be paid as Extra Work at Force Account for $30,000.00, which can be financed from the contingency fund. A cost analysis is on file at the Resident Engineer's office.

No adjustment of contract time is warranted since this change does not affect the controlling operation.

CONCURRED BY:		
Construction Engineer:	Ben Ghafghazi	Date 9/1/2010
Bridge Engineer:		Date
Project Engineer:		Date
Project Manager:		Date
FHWA Rep.:		Date
Environmental:		Date
Other (specify):		Date
Other (specify):		Date
District Prior Approval By:		Date
HQ (Issue Approve) By:		Date
Resident Engineer's Signature:		Date 9/1/2010

ESTIMATE OF COST

	THIS REQUEST	TOTAL TO DATE
ITEMS	$0.00	$0.00
FORCE ACCOUNT	$30,000.00	$830,000.00
AGREED PRICE	$0.00	$0.00
ADJUSTMENT	$0.00	$0.00
TOTAL	$30,000.00	$830,000.00

FEDERAL PARTICIPATION

☐ PARTICIPATING ☐ PARTICIPATING IN PART ☑ NONE
☐ NON-PARTICIPATING (MAINTENANCE) ☐ NON-PARTICIPATING

FEDERAL SEGREGATION (if more than one Funding Source or P.I.P. type)
☑ CCO FUNDED PER CONTRACT ☐ CCO FUNDED AS FOLLOWS

FEDERAL FUNDING SOURCE	PERCENT

ADA Notice: For individuals with sensory disabilities, this document is available in alternate formats. For information call: (916) 654-6410 or TDD (916) 654-3880 or write Records and Forms Management, 1120 N Street, MS-89, Sacramento, CA 95814.

STATE OF CALIFORNIA - DEPARTMENT OF TRANSPORTATION

CONTRACT CHANGE ORDER

Change Requested by: Engineer

CCO: 115	Suppl. No. 4	Contract No. 04 - 0120L4	Road ALA-80-1.6/2.7	FED. AID LOC.: NO FED AID

To: **M C M CONSTRUCTION INC**

You are directed to make the following changes from the plans and specifications or do the following described work not included in the plans and specifications for this contract. ***NOTE: This change order is not effective until approved by the Engineer.***

Description of work to be done, estimate of quantities and prices to be paid. (Segregate between additional work at contract price, agreed price and force account.) Unless otherwise stated, rates for rental of equipment cover only such time as equipment is actually used and no allowance will be made for idle time. This last percentage shown is the net accumulated increase or decrease from the original quantity in the Engineer's Estimate.

Provide Additional funds

Extra Work at Force Account:

Provide additional water pollution control measures as determined necessary by the Engineer. All work shall be in accordance with the appropriate sections of the Special Provisions.

Estimated cost of Extra Work at Force Account $30,000.00

Estimated Cost: Increase ☑ **Decrease** ☐ **$30,000.00**

By reason of this order the time of completion will be adjusted as follows: 0 days

Submitted by

Signature	Resident Engineer BEN GHAFGHAZI	Date 9/1/2010

Approval Recommended by

Signature	Construction Engineer Amer Bata	Date 9/3/10

Engineer Approval by

Signature	Construction Engineer Amer Bata	Date 9/3/10

We the undersigned contractor, have given careful consideration to the change proposed and agree, if this proposal is approved, that we will provide all equipment, furnish the materials, except as may otherwise be noted above, and perform all services necessary for the work above specified, and will accept as full payment therefor the prices shown above.

NOTE: If you, the contractor, do not sign acceptance of this order, your attention is directed to the requirements of the specifications as to proceeding with the ordered work and filing a written protest within the time therein specified.

Contractor Acceptance by

Signature Not Required	(Print name and title)	Date

STATE OF CALIFORNIA - DEPARTMENT OF TRANSPORTATION

CONTRACT CHANGE ORDER MEMORANDUM

TO: AMER BATA / BEN GHAFGHAZI	FILE: E.A. 04 - 0120L4
FROM: BEN GHAFGHAZI	CO-RTE-PM ALA-80-1.6/2.7
	FED. NO. NO FED AID
CCO#: 115 SUPPLEMENT#: 5 Category Code: CXSA	CONTINGENCY BALANCE (incl. this change): $1,045,847.90
COST: $50,000.00 INCREASE ☑ DECREASE ☐	HEADQUARTERS APPROVAL REQUIRED? ☑ YES ☐ NO
SUPPLEMENTAL FUNDS PROVIDED: $0.00	IS THIS REQUEST IN ACCORDANCE WITH ENVIRONMENTAL DOCUMENTS? ☑ YES ☐ NO
CCO DESCRIPTION: Provide Additional Funds for SWPPP	**PROJECT DESCRIPTION:** Construct bridge, roadway, building and electrical system.

Original Contract Time:	Time Adj. This Change:	Previously Approved CCO Time Adjustments:	Percentage Time Adjusted: (including this change)	Total # of Unreconciled Deferred Time CCO(s): (including this change)
810 Day(s)	0 Day(s)	0 Day(s)	0 %	0

THIS CHANGE ORDER PROVIDES FOR:

Additional funding for implementing additional storm water pollution prevention (SWPPP) measures beyond those provided for under the contract.

The original Change Order No. 115 along with the additional funding provided under Supplements No. 1 through No. 4 provided force account funding for the contractor to implement additional SWPP measures necessary due to the high profile nature of the project which constructs the eastern touchdown structures for the new east span of the San Francisco Oakland Bay Bridge. The project falls both adjacent to and over the San Francisco Bay and additional requirements were requested by the District Division of Construction, Headquarters Environmental Division and the Regional water Quality Control Board.

The cost of the work has exceeded the previous estimate and it is now anticipated that additional funding of $50,000.00 will be required to fund the work.

The work shall be compensated as extra work at force account at an estimated cost of $50,000 which shall be financed from the contract contingency funds. A cost analysis is on file. An Issue and Approved was granted by Larry Salhaney of Headquarters Construction on January 3, 2011.

No adjustment of contract time is warranted as the change will not affect the controlling operation.

Maintenance concurrence is not required as this change doesn't affect any permanent roadway features.

CONCURRED BY:			
Construction Engineer:	Ben Ghafghazi	Date	1/3/2011
Bridge Engineer:		Date	
Project Engineer:		Date	
Project Manager:	Ken Terprstra	Date	5/27/09
FHWA Rep.:		Date	
Environmental:		Date	
Other (specify):		Date	
Other (specify):		Date	
District Prior Approval By:		Date	
HQ (Issue Approve) By:	Larry Salhaney	Date	1/3/11
Resident Engineer's Signature:		Date	1/3/2011

ESTIMATE OF COST

	THIS REQUEST	TOTAL TO DATE
ITEMS	$0.00	$0.00
FORCE ACCOUNT	$50,000.00	$880,000.00
AGREED PRICE	$0.00	$0.00
ADJUSTMENT	$0.00	$0.00
TOTAL	$50,000.00	$880,000.00

FEDERAL PARTICIPATION

☐ PARTICIPATING ☐ PARTICIPATING IN PART ☑ NONE
☐ NON-PARTICIPATING (MAINTENANCE) ☐ NON-PARTICIPATING

FEDERAL SEGREGATION (if more than one Funding Source or P.I.P. type)
☐ CCO FUNDED PER CONTRACT ☐ CCO FUNDED AS FOLLOWS

FEDERAL FUNDING SOURCE	PERCENT

ADA Notice: For individuals with sensory disabilities, this document is available in alternate formats. For information call: (916) 654-6410 or TDD (916) 654-3880 or write Records and Forms Management, 1120 N Street, MS-89, Sacramento, CA 95814.

STATE OF CALIFORNIA - DEPARTMENT OF TRANSPORTATION

CONTRACT CHANGE ORDER

Change Requested by: Engineer

CCO: 115	Suppl. No. 5	Contract No. 04 - 0120L4 Road ALA-80-1.6/2.7	FED. AID LOC.: NO FED AID

To: **M C M CONSTRUCTION INC**

You are directed to make the following changes from the plans and specifications or do the following described work not included in the plans and specifications for this contract. ***NOTE: This change order is not effective until approved by the Engineer.***

Description of work to be done, estimate of quantities and prices to be paid. (Segregate between additional work at contract price, agreed price and force account.) Unless otherwise stated, rates for rental of equipment cover only such time as equipment is actually used and no allowance will be made for idle time. This last percentage shown is the net accumulated increase or decrease from the original quantity in the Engineer's Estimate.

Extra Work at Force Account:

Estimated cost of Extra Work at Force Account $50,000.00

Estimated Cost: Increase ☑ Decrease ☐ **$50,000.00**

By reason of this order the time of completion will be adjusted as follows: 0 days

Submitted by

Signature	Resident Engineer BEN GHAFGHAZI	Date 12/28/2010

Approval Recommended by

Signature	Construction Manager Hazem El-Mahmoud ~~For~~ Amer Bata	Date 12/29/10

Engineer Approval by

Signature	Construction Manager Amer Bata	Date 1/4/11

We the undersigned contractor, have given careful consideration to the change proposed and agree, if this proposal is approved, that we will provide all equipn furnish the materials, except as may otherwise be noted above, and perform all services necessary for the work above specified, and will accept as full paymer therefor the prices shown above.

NOTE: If you, the contractor, do not sign acceptance of this order, your attention is directed to the requirements of the specifications as to proceeding with the ordered work and filing a written protest within the time therein specified.

Contractor Acceptance by

Signature NOT Required	(Print name and title)	Date

STATE OF CALIFORNIA - DEPARTMENT OF TRANSPORTATION

CONTRACT CHANGE ORDER

Change Requested by: Engineer

CCO 116 Suppl. No. 0 Contract No. 04 - 0120L4 Road ALA-80-1.6/2.7 FED. AID LOC.: NO FED AID

To: **M C M CONSTRUCTION INC**

You are directed to make the following changes from the plans and specifications or do the following described work not included in the plans and specifications for this contract. ***NOTE: This change order is not effective until approved by the Engineer.***

Description of work to be done, estimate of quantities and prices to be paid. (Segregate between additional work at contract price, agreed price and force account.) Unless otherwise stated, rates for rental of equipment cover only such time as equipment is actually used and no allowance will be made for idle time. This last percentage shown is the net accumulated increase or decrease from the original quantity in the Engineer's Estimate.

Replace the number 5 lane from station W 89+30 to W 93+13, and the number 4 lane from station W 91+00 to W 92+30 on existing Westbound 80. This work shall be performed during the Labor Day 2009 closure of SFOBB.

Extra Work at Lump Sum:

Provide labor, equipment, and materials as necessary to excavate and dispose of existing roadway, place Lean Concrete Base Rapid Set, and place AC (Type A) with GlasGrid reinforcement as shown on sheet 2 of 8 of this CCO.

GlasGrid shall comply with manufacturer's specification for GlasGrid 8502 Detail Repair System. Lean Concrete Base Rapid Setting shall comply with the specifications on sheets 3 of 8 through 8 of 8 of this CCO.

For this work, the contractor will be paid the sum of $879,000.00. This sum constitutes full compensation, including markups, for this change.

Extra Work at Agreed Lump Sum $879,000.00

Estimated Cost: Increase ☑ Decrease ☐ **$879,000.00**

By reason of this order the time of completion will be adjusted as follows: 0 days

Signature	**Resident Engineer** BEN GHAFGHAZI	**Date** 8/17/09
Signature	**Construction Manager** Amer Bata	**Date** 8/17/09
Signature	**Construction Manager** Amer Bata	**Date** 9/14/08

We the undersigned contractor, have given careful consideration to the change proposed and agree, if this proposal is approved, that we will provide all equipment, furnish the materials, except as may otherwise be noted above, and perform all services necessary for the work above specified, and will accept as full payment therefor the prices shown above.

NOTE: If you, the contractor, do not sign acceptance of this order, your attention is directed to the requirements of the specifications as to proceeding with the ordered work and filing a written protest within the time therein specified.

Signature	**(Print name and title)** Edmund A. Puchi Treasurer	**Date** 9-1-2009

STATE OF CALIFORNIA - DEPARTMENT OF TRANSPORTATION

CONTRACT CHANGE ORDER MEMORANDUM

TO: AMER BATA / BEN GHAFGHAZI

FROM: BEN GHAFGHAZI

FILE: E.A. 04 - 0120L4
CO-RTE-PM ALA-80-1.6/2.7
FED. NO. NO FED AID

CCO#: 116 | SUPPLEMENT#: 0 | Category Code: CJSA

CONTINGENCY BALANCE (incl. this change) $5,160,147.20

COST: $879,000.00 INCREASE ☑ DECREASE ☐

HEADQUARTERS APPROVAL REQUIRED? ☑ YES ☐ NO

SUPPLEMENTAL FUNDS PROVIDED: $0.00

IS THIS REQUEST IN ACCORDANCE WITH ENVIRONMENTAL DOCUMENTS? ☑ YES ☐ NO

CCO DESCRIPTION:
Repair existing #4 and #5 lanes WB.

PROJECT DESCRIPTION:
Construct bridge, roadway, building and electrical system.

Original Contract Time:	Time Adj. This Change:	Previously Approved CCO Time Adjustments:	Percentage Time Adjusted: (including this change)	Total # of Unreconciled Deferred Time CCO(s): (including this change)
810 Day(s)	0 Day(s)	184 Day(s)	23 %	10

THIS CHANGE ORDER PROVIDES FOR:

Replacing the existing number 5 lane from stations W 89+30 to W 93+13, and the number 4 lane from station W 91+00 to W 92+30 on Westbound 80 by excavating and disposing of the existing roadway, placing Lean Concrete Base Rapid Set, and placing AC (Type A) with GlasGrid reinforcement. The details are shown on sheet 2 of 8 of the CCO. Lean Concrete Base Rapid Set specifications are included on sheets 3 of 8 through 8 of 8 of the CCO. This work will be performed during the Labor Day 2009 closure of SFOBB.

This change is necessary because the lanes at the specified locations are currently experiencing failure. This work was originally part of the Oakland Touchdown 2 contract (EA 0120M4), but Management has decided to take advantage of the upcoming Labor Day Weekend closure and expedite the above mentioned repair work and minimize impact to the public. This work has been discussed with Jon Tapping, Headquarters Construction Reviewer, to determine whether the work is within the scope of this contract. Following is his determination:

1) The proposed work is within the OTD 1 contract limits.
2) The proposed work is similar in nature to other work provided for in the OTD 1 contract.
3) The proposed work can be performed with current Contractor forces without specialized forces or equipment.
4) The proposed work can be financed within the original corridor project allotment.
5) The proposed work will likely not extend the contract completion date and/or affect the current controlling operation of work.
6) The Contractor agrees to the terms and conditions of the proposed CCO.
7) When the original SFOBB East Span Replacement project was broken up into various construction contracts, that division was based on the best information available at that time and what made sense from a contract administration perspective. If new information becomes available or when contract administration opportunities arise that make it advantageous to expedite or adjust (within reason) certain items of work, then it behooves the Department to make changes to most efficiently deliver the final contemplated product. Such a decision would be within the scope of the contract as it was originally envisioned.
8) While the proposed work was originally included in the OTD 2 contract scope of work, both Materials and Design believe that the present roadway will need replacing prior to the award of the OTD 2 contract which is still a few years in the future. The proposed work exists within the existing OTD 1 contract limits and the availability of the 2009 Labor Day weekend full SFOBB closure weekend has also given the Department the opportunity to enhance the design (i.e., providing a deeper section) with the much longer work window (72 hours minimum versus 8 hours). This will also minimize the chance of impacting east bound bay bridge traffic during a regular commute if the regular traffic closures could not be picked up on schedule.

This work will be paid as Extra Work at Agreed Lump Sum of $879,000.00, which can be financed from the contingency fund. A detailed cost analysis has been performed and is on file at the Resident Engineer's office.

This change was requested by Jaime Gutierrez of Project Development (memo attached) and has been discussed and concurred with Tinu Mishra of District 4 Materials; Philip Harsono of Maintenance; Patrick Treacy, HQ Construction Coordinator; Mike Forner, SFOBB Construction Manager; and Ken Terpstra, Project Manager. An Issue and Approve was granted by Headquarters on August 18, 2009.

No adjustment of contract time is warranted since this change does not affect the controlling operation.

ADA Notice: For individuals with sensory disabilities, this document is available in alternate formats. For information call: (916) 654-6410 or TDD (916) 654-3880 or write Records and Forms Management, 1120 N Street, MS-89, Sacramento, CA 95814.

CONCURRED BY:			
Construction Engineer:	Ben Ghafghazi	Date	8/18/09
Bridge Engineer:		Date	
Project Engineer:	Jaime Gutierrez	Date	4/29/09
Project Manager:	Ken Terprstra	Date	6/16/09
FHWA Rep.:		Date	
Environmental:		Date	
Other (specify):	Phil Harsono, Maintenance	Date	6/1/09
Other (specify):	Patrick Treacy, HQ Const. Coord.	Date	6/9/09
District Prior Approval By:	Mike Forner, Principal TE	Date	6/8/09
HQ (Issue Approve) By:	Larry Salhaney	Date	8/18/09
Resident Engineer's Signature:		Date	8/18/09

ESTIMATE OF COST

	THIS REQUEST	TOTAL TO DATE
ITEMS	$0.00	$0.00
FORCE ACCOUNT	$0.00	$0.00
AGREED PRICE	$879,000.00	$879,000.00
ADJUSTMENT	$0.00	$0.00
TOTAL	$879,000.00	$879,000.00

FEDERAL PARTICIPATION

☐ PARTICIPATING ☐ PARTICIPATING IN PART ☑ NONE
☐ NON-PARTICIPATING (MAINTENANCE) ☐ NON-PARTICIPATING

FEDERAL SEGREGATION (if more than one Funding Source or P.I.P. type)
☑ CCO FUNDED PER CONTRACT ☑ CCO FUNDED AS FOLLOWS

FEDERAL FUNDING SOURCE	PERCENT

ADA Notice: For individuals with sensory disabilities, this document is available in alternate formats. For information call: (916) 654-6410 or TDD (916) 654-3880 or write Records and Forms Management, 1120 N Street, MS-89, Sacramento, CA 95814.

DIST	COUNTY	ROUTE	KILOMETER POST TOTAL PROJECT	SHEET No	TOTAL SHEETS
04	Ala	80	1.6/2.7	204RC	643

REGISTERED CIVIL ENGINEER

PLANS APPROVAL DATE

REGISTERED PROFESSIONAL ENGINEER — CIVIL — STATE OF CALIFORNIA

The State of California or its officers or agents shall not be responsible for the accuracy or completeness of electronic copies of this plan sheet.

Caltrans now has a web site! To get to the web site, go to: http://www.dot.ca.gov

Contract No. 04-0120L4

Page 2 of 8

CCO No. 116 Suppl. No.

Contractor MCM

Res. Engr. B. Ghafghazi

ABBREVIATIONS:

LCBRS Lean Concrete Base Rapid Set

AC - A Asphalt Concrete Type A 3/4 inch grading with PG 64-10 asphalt binder

LEGEND

Remove and replace with new structural section

Construction Area

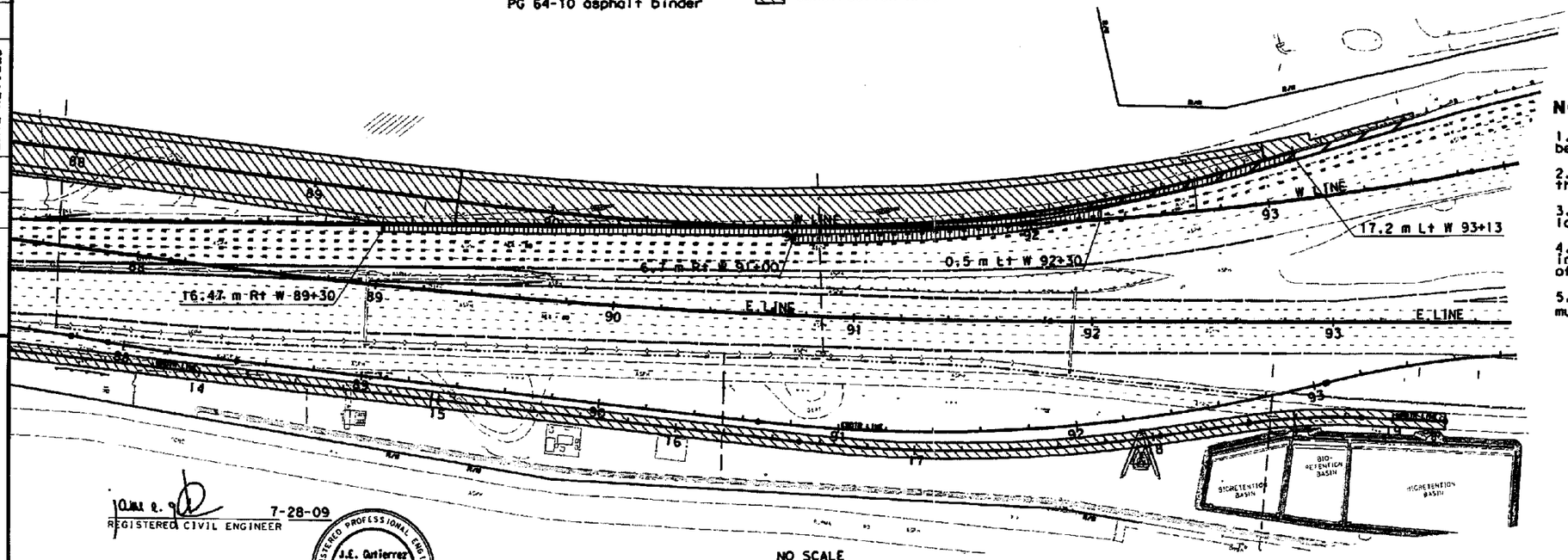

7-28-09
REGISTERED CIVIL ENGINEER

REGISTERED PROFESSIONAL ENGINEER — J.E. Gutierrez 52324 — 12-31-10 — CIVIL — STATE OF CALIFORNIA

NOTES:

1. The existing AC pavement and base shall be removed to a depth of 510 mm
2. The LCB shall be cured overnight before the placement of the AC layers
3. AC-A shall be spread and compacted in 4 layers of recommended thicknesses above
4. The GlasGrid material shall be placed in between the top 2 and bottom 2 layers of AC
5. All traffic striping that is removed must be replaced

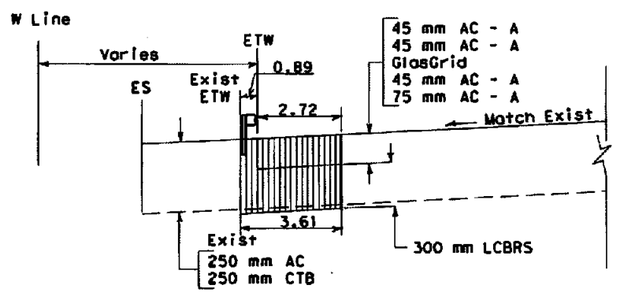

From W 89+30 to W 90+00
W 92+30 to 93+12
No Scale

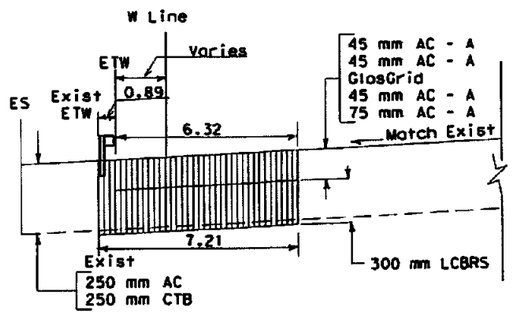

From W 91+00 to W 92+30
No Scale

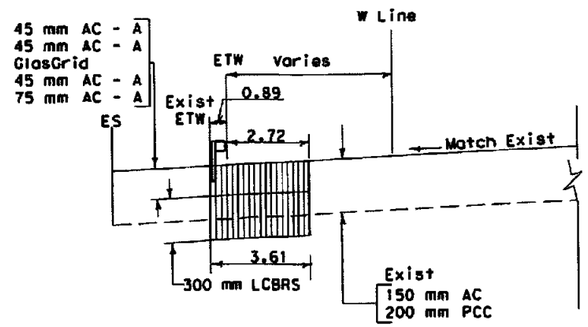

From W 90+00 to W 91+00
No Scale

CONSTRUCTION DETAILS
AC PAVEMENT
NO SCALE

All Dimensions are in Millimeters unless otherwise shown

C-4A

STATE OF CALIFORNIA - DEPARTMENT OF TRANSPORTATION

PROJECT ENGINEER J. E. GUTIERREZ

CALCULATED/DESIGNED BY | CHECKED BY | DATE | REVISED BY | DATE REVISED

LAST REVISION 03-04-09 | DATE PLOTTED => 8/5/2009 | TIME PLOTTED => 11:24:00 AM

FOR REDUCED PLANS ORIGINAL SCALE IS IN MILLIMETERS 0 20 40 60 80

USERNAME => $(USER)
DGN FILE => ...\C-4A 8-05-09.dgn

CU 04251 | EA 0120L1

10-1.__ LEAN CONCRETE BASE RAPID SETTING

Lean concrete base rapid setting shall conform to the provisions in Section 28, "Lean Concrete Base," of the Standard Specifications and these special provisions.

The Contractor shall determine the mix proportions, including cement content, for lean concrete base rapid setting. Cement for lean concrete base rapid setting shall be hydraulic cement as defined in ASTM Designation: C 219. Mineral admixtures shall not be used. Lean concrete base rapid setting made with cement conforming to ASTM Designation: C-150 shall be cured with pigmented curing compound in conformance with the provisions in Section 90-7.02, "Curing Pavements." Lean concrete base rapid setting made with cements that do not conform to ASTM Designation: C-150 shall be cured as recommended by the manufacturer of the cement.

Aggregate for lean concrete base rapid setting shall conform to the requirements of Section 90-2.02, "Aggregates," and 90-3, "Aggregate Gradings," of the Standard Specifications. At the option of the Contractor, the combined aggregate grading may be either the 37-5 mm maximum or the 25-mm maximum.

The Contractor shall use a nonchloride Type C accelerating chemical admixture or a Type E accelerating and water reducing chemical admixture. Chemical admixtures shall conform to the provisions in Section 90-4, "Admixtures," of the Standard Specifications. The Contractor shall be responsible for ensuring compatibility when more than one type of admixture is used. In addition to the admixtures listed on the Department's current list of approved admixtures, citric acid or borax may be used if requested in writing by the cement manufacturer and a sample is submitted to the Engineer. Air-entraining admixtures shall not be used.

Penetration requirements in Section 28-1.04, "Proportioning, Mixing and Transporting," of the Standard Specifications shall not apply.

MIX DESIGN

The Contractor shall design the rapid setting concrete mix to meet an opening age compressive strength of 5.0 MPa. Rapid setting concrete for compressive strength test specimens shall be prepared in accordance with ASTM Designation: C 192. Compressive strength test cylinders (150 mm x 150mm) shall be fabricated, handled, cured and tested in accordance with items D8 and D9; and section E of California Test 548, except that an additional three cylinders shall be fabricated and tested for opening age strength. Opening age is defined as the age at which the lean concrete base rapid setting will achieve the specified strength prior to start of paving asphalt concrete pavement. Prior to the start of paving operations, the Contractor shall submit a mix design showing the proportions of materials used and the compressive strength obtained from rapid concrete at opening age, and 7 days. The mix design shall include copies of test reports, including test dates, and a complete list of materials including type, brand, source, and amount of: cementitious material, coarse aggregate, fine aggregate, water, and admixtures. The penetration and the air content of the mix shall also be shown.

Contract No. 04-0120L4
Page 3 of 8
CCO No. 116 Suppl. No. _____
Contractor MCM
Res. Engr. B. Ghafghazi

REGISTERED PROFESSIONAL ENGINEER
TRINAYANA MISHRA
No. C 052097
Exp. 12/31/10
CIVIL
STATE OF CALIFORNIA

After the mix design is established, at least five samples of rapid strength concrete base shall be taken and tested for compressive strength using the established mix design. Each sample shall consist of four cylinders, two to be tested at opening age and two to be tested at 7 days. The standard deviation and average values of the test results shall be included in the submittal to the Engineer.

If a change in sources is made, or admixtures added or deleted from the mix, a new mix design shall be submitted to the Engineer for approval.

STRENGTH TESTING

During placement of lean concrete base rapid setting, the Contractor shall fabricate 150 mm x 150 mm cylinders and test for compressive strength for every 100 cubic meters of lean concrete base rapid setting placed. Test cylinders shall be fabricated in conformance with items D8 and D9 of California Test 548 and tested for compressive strength in conformance with California Test 521. Each compressive strength test shall consist of a minimum of two cylinders tested at opening age.

VOLUMETRIC PROPORTIONING

When lean concrete base rapid setting is proportioned by volume, the method shall conform to requirements specified herein.

Aggregates shall be handled and stored in conformance with the provisions in Section 90-5.01, "Storage of Aggregates," of the Standard Specifications. Liquid admixtures shall be proportioned in conformance with the provisions in Section 90-4.10, "Proportioning and Dispensing Liquid Admixtures," of the Standard Specifications.

Batch-mixer trucks shall be equipped to proportion cement, water, aggregate and additives by volume. Aggregate feeders shall be connected directly to the drive on the cement vane feeder. The cement feed rate shall be tied directly to the feed rate for the aggregate and other ingredients. Any change in the ratio of cement to aggregate shall be accomplished by changing the gate opening for the aggregate feed. The drive shaft of the aggregate feeder shall be equipped with a revolution counter reading to the nearest full or partial revolution of the aggregate delivery belt.

Aggregate shall be proportioned using a belt feeder operated with an adjustable cutoff gate delineated to the nearest quarter increment. The height of the gate opening shall be readily determinable. Cement shall be proportioned by a method that conforms to the accuracy requirements of these special provisions. Water shall be proportioned by a meter conforming to the provisions in Section 9-1.01, "Measurement and Payment," of the Standard Specifications and these special provisions.

Delivery rate of aggregate and cement per revolution of the aggregate feeder shall be calibrated at appropriate gate settings for each batch-mixer truck used on the project and for each aggregate source. Batch-mixer trucks shall be calibrated at 3 different aggregate gate settings that are commensurate with production needs. Two or more calibration runs shall be required at each of the different aggregate gate openings. The actual mass of material delivered for aggregate proportioning device calibrations shall be determined by a platform scale as specified in these special provisions.

REGISTERED PROFESSIONAL ENGINEER
TRINAYANA MISHRA
No. C 052897
Exp. 12/31/10
CIVIL
STATE OF CALIFORNIA

Contract No. 04-0120L4
Page 4 of 8
CCO No. 116 Suppl. No.
Contractor MCM
Res. Engr. B. Ghafghazi

Aggregate belt feeder shall deliver aggregate to the mixer with volumetric consistency so that deviation for any individual aggregate delivery rate check-run shall not exceed 1.0 percent of the mathematical average of all runs for the same gate opening and aggregate type. Each test run shall be at least 500 kg. Fine aggregate used for calibration shall not be reused for device calibration.

At the time of batching, aggregates shall be dried or drained sufficiently to result in stable moisture content, so that no visible separation of water from aggregate takes place during the proportioning process. In no event shall the free moisture content of the fine aggregate at the time of batching exceed 8 percent of its saturated, surface-dry mass.

If separate supplies of aggregate material of the same size group with different moisture content or specific gravity or surface characteristics affecting workability are available at the proportioning plant, withdrawals shall be made from one supply exclusively and the materials therein completely exhausted before starting another supply.

Rotating and reciprocating equipment on batch-mixer trucks shall be covered with metal guards.

The cement proportioning system shall deliver cement to the mixer with a volumetric consistency so that the deviation for any individual delivery rate check-run shall not exceed 1.0 percent of the mathematical average of 3 runs of at least 500 kg each. Cement used for calibration shall not be reused for device calibration.

Water meter accuracy shall be such that, when operating between 50 percent and 100 percent of production capacity, the difference between the indicated mass of water delivered and the actual mass delivered shall not exceed 1.5 percent of the actual mass for each of two individual runs of 1200 liters. The water meter shall be calibrated in conformance with the requirements of California Test 109 and shall be equipped with a resettable totalizer and display the operating rate.

Calibration tests for aggregate, cement and water proportioning devices shall be conducted with a platform scale located at the calibration site. Weighing of test run calibration material shall be performed on a platform scale having a maximum capacity not exceeding 2.5 tonnes with maximum graduations of 0.5 kg. The platform scale shall be error tested within 8 hours of calibration of batch-mixer truck proportioning devices. Error testing shall be performed with test masses conforming to California Test 109 and shall produce a witness scale that is within 2 graduations of the test mass load. The scale shall be available for use at the production site throughout the production period. Equipment needed for the calibration of proportioning systems shall remain available at the production site throughout the production period. A Certificate of Compliance in conformance with the provisions in Section 6 1.07, "Certificates of Compliance," shall be furnished with each delivery of aggregate, cement, and admixtures used for calibration tests and shall be submitted to the Engineer with a certified copies of the mass of each delivery. The Certificate of Compliance shall state that the source of materials used for the calibration tests is from the same source as to be used for the planned work. The Certificate of Compliance shall state that the material supplied conforms to the Standard Specifications and these special provisions and shall be signed by an authorized representative who shall have the authority to represent and act for the Contractor.

REGISTERED PROFESSIONAL ENGINEER
TRINAYANA MISHRA
No. C 052597
Exp. 12/31/10
CIVIL
STATE OF CALIFORNIA

Contract No. 04-0120L4

Page 5 of 8

CCO No. 116 Suppl. No. _____

Contractor MCM

Res. Engr. B. Ghafghazi

The batch-mixer truck shall be equipped so that an accuracy check can be made prior to the first operation for the project and at any other time as directed by the Engineer. Further calibration of proportioning devices shall be required every 30 days after production begins or when the source or type of any ingredient is changed. A spot calibration shall consist of calibration of the cement proportioning system only. A two run spot re-calibration of the cement proportioning system shall be performed each time 50 tonnes of cement has passed through the batch-mixer truck. Should the spot re-calibration of the cement proportioning system fall outside the limitations specified herein, a full calibration of the cement proportioning system shall be completed before the resumption of production.

Liquid admixtures shall be proportioned by a meter.

Cement storage shall be located immediately before the cement feeder and shall be equipped with a device that will automatically shut down the power to the cement feeder and aggregate belt feeder when the cement storage level is lowered to a point where less than 20 percent of the total volume is left in storage.

The Contractor shall furnish aggregate moisture determinations, made in conformance with the requirements of California Test 223, at least every 2 hours during proportioning and mixing operations. Moisture determinations shall be recorded and presented to the Engineer at the end of the production shift.

Each aggregate bin shall be equipped with a device that will automatically shut down the power to the cement feeder and the aggregate belt feeder when the aggregate discharge rate is less than 95 percent of the scheduled discharge rate of any bin.

Indicators specified herein shall be in working order prior to commencing proportioning and mixing operations and shall be visible when standing near the batch-mixer truck.

Identifying numbers of batch-mixer trucks shall be at least 75 mm in height, and be located on the front and rear of the vehicles.

Volumetric proportioned rapid strength concrete base shall be mixed in a mechanically operated mixer of adequate size and power for lean concrete base rapid setting to be placed. Mixers may be of the auger type and shall be operated uniformly at the mixing speed recommended by the manufacturer. Mixers that have an accumulation of hard concrete or mortar shall be removed from service until cleaned. Other types of mixers may be used provided mixing quality will meet the requirements of these special provisions.

Charge or rate of feed to the mixer shall not exceed that which will permit complete mixing of the materials. Dead areas in the mixer, where material does not move or is not sufficiently agitated, shall be corrected by a reduction in the volume of material or by other adjustments. The mixer shall be designed to provide sufficient mixing action and movement to produce properly mixed rapid strength concrete base. Mixing shall continue until a homogeneous mixture is produced at discharge from the mixer. There will be no lumps or evidence of non-dispersed cement at discharge from the mixer. No water will be added to the lean concrete base rapid setting after discharge from the mixer.

REGISTERED PROFESSIONAL ENGINEER
TRINAYANA MISHRA
No. C 052597
Exp. 12/31/10
CIVIL
STATE OF CALIFORNIA

Contract No. 04-0120L4
Page 6 of 8
CCO No. 116 Suppl. No.
Contractor MCM
Res. Engr. B. Ghafghazi

Equipment having components made of aluminum or magnesium alloys, which may have contact with plastic rapid setting concrete during mixing or transporting of lean concrete base rapid setting, shall not be used.

Ice shall not be used to cool lean concrete base rapid setting directly. When ice is used to cool water used in the mix, all of the ice shall be melted before entering the mixer.

Cement shall be proportioned and charged into the mixer by means that will result in no losses of cement due to wind, or due to accumulation on equipment, or other conditions which will vary the required quantity of cement.

Each mixer shall have a metal plate or plates, prominently attached, on which the following information is provided:

A. Uses for which the equipment is designed.
B. Manufacturer's guaranteed capacity of the mixer in terms of the volume of mixed concrete.
C. Speed of rotation of the mixer.

Consistency and workability of mixed lean concrete base rapid setting when discharged at the delivery point shall be suitable for placement and consolidation.

Information generated by volumetric devices will not be used for payment calculations.

The device that controls the proportioning of cement, aggregate and water shall produce a log of production data. The log of production data shall consist of a series of snapshots captured at 15 minute intervals throughout the period of daily production. Each snapshot of production data shall be a register of production activity at that time and not a summation of the data over the preceding 15 minutes. The amount of material represented by each snapshot shall be the amount produced in the period of time from 7.5 minutes before to 7.5 minutes after the capture time. The daily log shall be submitted to the Engineer, in electronic or printed media, at the end of each production shift or as requested by the Engineer, and shall include the following:

A. Mass of cement per revolution count.
B. Mass of each aggregate size per revolution count.
C. Gate openings for each aggregate size being used.
D. Mass of water added to the concrete per revolution count.
E. Moisture content of each aggregate size being used.
F. Individual volume of all other admixtures per revolution count.
G. Time of day.
H. Day of week.
I. Production start and stop times.
J. Batch-mixer truck identification.
K. Name of supplier.
L. Specific type, size, or designation of concrete being produced.
M. Source of the individual aggregate sizes being used.
N. Source, brand and type of cement being used.
O. Source, brand and type of individual admixtures being used.
P. Name and signature of operator.

REGISTERED PROFESSIONAL ENGINEER
TRINAYANA MOHIA
No C 058897
Exp 12/31/10
CIVIL
STATE OF CALIFORNIA

Contract No. 04-012014
Page 7 of 8
CCO No. 116 Suppl. No.
Contractor MCM
Res. Engr. B. Ghafghazi

Required report items may be input by hand into a pre-printed form or captured and printed by the proportioning device. Electronic media containing recorded production data shall be presented in a tab delimited format on a 90 mm diskette with a capacity of at least 1.4 megabytes. Each snapshot of the continuous production shall be followed by a line-feed carriage-return with allowances for sufficient fields to satisfy the amount of data required by these specifications. The reported data shall be in the above order and shall include data titles at least once per report.

PAYMENT

The contract price paid per cubic meter for lean concrete base rapid setting shall include full compensation for furnishing all labor, materials (including cement in the amount determined by the Contractor), tools, equipment and incidentals, and for doing all the work involved in constructing, sampling and testing lean concrete base rapid setting as shown on the plans, as specified in the Standard Specifications and these special provisions, and as directed by the Engineer.

If calibration of volumetric batch-trucks is performed more than 160 km from the project limits, additional inspection expenses will be sustained by the State. Whereas it is and will be impracticable and extremely difficult to ascertain and determine the actual increase in these expenses, it is agreed that payment to the Contractor for lean concrete base rapid setting will be reduced to $1,000.

REGISTERED PROFESSIONAL ENGINEER
TRINAYANA MISHRA
No. C 052567
Exp. 12/31/10
CIVIL
STATE OF CALIFORNIA

Contract No. 04-0120L4
Page 8 of 8
CCO No. 116 Suppl. No.
Contractor MCM
Res. Engr. B. Ghafghazi

STATE OF CALIFORNIA - DEPARTMENT OF TRANSPORTATION

CONTRACT CHANGE ORDER

Change Requested by: Engineer

CCO 118	Suppl. No. 0	Contract No. 04 - 0120L4	Road ALA-80-1.6/2.7	FED. AID LOC.: NO FED AID

M C M CONSTRUCTION INC

You are directed to make the following changes from the plans and specifications or do the following described work not included in the plans and specifications for this contract. ***NOTE: This change order is not effective until approved by the Engineer.***

Description of work to be done, estimate of quantities and prices to be paid. (Segregate between additional work at contract price, agreed price and force account.) Unless otherwise stated, rates for rental of equipment cover only such time as equipment is actually used and no allowance will be made for idle time. This last percentage shown is the net accumulated increase or decrease from the original quantity in the Engineer's Estimate.

Extra Work at Lump Sum:

Provide labor, equipment, and materials necessary to install bushings and bare copper grounding conductors in Bridge No. 34-0006 L/R as shown on sheets 2 of 11 through 11 of 11 of this CCO. All work shall be in accordance with Section 10-3, "Signals, Lighting and Electrical Systems," of the Special Provisions and Section 86, "Signals, Lighting and Electrical Systems," of the Standard Specifications. For this work the contractor will be paid the sum of $181,994.20. This sum constitutes full compensation, including markups, for this change.

Extra Work at Agreed Lump Sum $181,994.20

Estimated Cost: Increase ☑ Decrease ☐ $181,994.20

By reason of this order the time of completion will be adjusted as follows: 0 days

Submitted by

Signature	Resident Engineer BEN GHAFGHAZI	Date 6/23/09

Approval Recommended by

Signature	Construction Engineer Ben Ghafghazi	Date 6/23/09

Engineer Accepted by

Signature	Construction Manager Amer Bata	Date 7/15/09

We the undersigned contractor, have given careful consideration to the change proposed and agree, if this proposal is approved, that we will provide all equipment, furnish the materials, except as may otherwise be noted above, and perform all services necessary for the work above specified, and will accept as full payment therefor the prices shown above.

NOTE: If you, the contractor, do not sign acceptance of this order, your attention is directed to the requirements of the specifications as to proceeding with the ordered work and filing a written protest within the time therein specified.

Contractor Accepted by

Signature	(Print name and title) EDMUNDO A. PUCHI, TREASURER	Date 7/8/09

DIST	COUNTY	ROUTE	KILOMETER POST TOTAL PROJECT	SHEET No	TOTAL SHEETS
04	Ala	80	1.6/2.7	395 R1	643

REGISTERED ELECTRICAL ENGINEER — 05/15/06 DATE

1-29-07
PLANS APPROVAL DATE

REGISTERED PROFESSIONAL ENGINEER — JENS ERLINGSSON No. 8249 Exp. 9/30/09 ELECTRICAL — STATE OF CALIFORNIA

PB POWER, Inc.
A Parsons Brinckerhoff Company
303 Second St., Suite 700N
San Francisco, CA 94107-1317

The State of California or its officers or agents shall not be responsible for the accuracy or completeness of electronic copies of this plan sheet.

To get to the Caltrans web site, go to: http://www.dot.ca.gov

Caltrans Metric

SHEET NOTES:

(1) Coordinate installation of conduits with Hinge EW structural details. Connect to existing. △1

(2) Refer to sheets E-32, E-33 and E-34 for conduit support location. Refer to E-35 and E-36 drawings for conduit support details.

(3) See sheet E-13 for continuation.

(4) See Detail 1 on sheet E-43.

(5) The segment of conduit through the hinge to this point, 800 mm beyond face of diaphragm, shall be installed first according to the structural construction sequence. Continuation of the conduits from this interface point shall be made using threaded conduit couplings.

(6) Provided with pipe sleeves for conduits. △1

(7) Conduits are provided with pipe sleeves. The Contractor shall ensure that conduits are solidly secured or anchored at this location.

(8) The Contractor to provide non-removable warning sign above or before the girder access opening. The sign shall read "Caution - Authorized Personnel Only. Electricals Inside".

(9) Conduit end shall be provided with ground bushing. Bond all conduits with #2 AWG bare copper wire, connected to the ground bar, see Detail 1, sheet E-43. △1

(10) The system ground, #500 kcMIL shall be routed along the 15 kV conduit run or conduit as shown with U-bolts strap to the conduit.

NOTES:

1. References:
   - TOS equipment is shown for conduit routing only. For typical details of TOS controller and devices, see sheets starting at E-204.
   - For types of pull boxes, splice boxes and enclosures, see sheet E-44.
   - For overall grounding plan, see sheet E-42.
   - For conduit and cable tray schedules, see sheets starting at E-224.
2. For overall plan of this area, see sheet E-13.
3. ~~(*) For dimensions, see structures sheets.~~ DELETED △1
4. Once the conduits are installed on the TOS/COM and 15 kV vaults, Contractor to grout the conduit block outs.

REGISTERED PROFESSIONAL ENGINEER — FADI WALIEDDINE No. 11465 Exp. 12/31/2009 ELECTRICAL — STATE OF CALIFORNIA △1

MARK	DATE	DESCRIPTIONS	REV	CK	CCO
△1	01/15/09	Added pipe sleeves, sheet notes 6, 7, 8, 9, 10, notes 4. Relocated conduits. Revised sheet note 1 and note 3.	EJL	FSW	7B 80

REVISIONS

CONTRACT CHANGE ORDER NO. 118
SHEET 2 OF 11 6/22/09

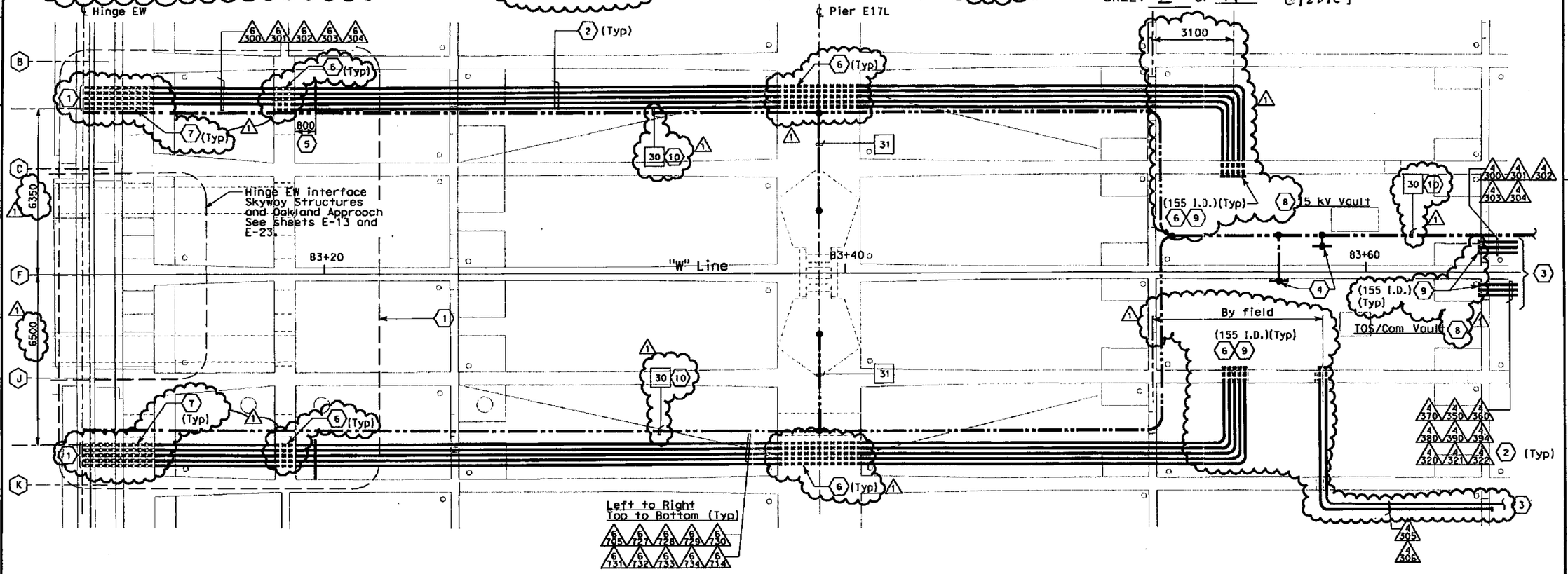

DETAIL 1 - HINGE EW AND PIER E17L

DETAILS
ROADWAY & GIRDER LEVEL WESTBOUND GIRDER CONDUIT INSTALLATION
SCALE 1:75

E-24

STATE OF CALIFORNIA - DEPARTMENT OF TRANSPORTATION
Caltrans
DESIGN OVERSIGHT
BEHZAD GOLEMOHAMMADI
CALCULATED/DESIGNED BY FK
CHECKED BY AB
REVISED BY
DATE REVISED 2/06

LAST REVISION 00-00-00
DATE PLOTTED => 1/16/2009
TIME PLOTTED => 9:56:51 AM

FOR REDUCED PLANS ORIGINAL SCALE IS IN MILLIMETERS 0 20 40 60 80

DGN FILE =>T:\13103\MS\pse\OTD-Contract 1\CCO\Electrical\CCO-80
USERNAME =>llarico
Conduit rack & embedd struts\40120lua024r1.dgn
CU 04251
EA 0120L1

DIST	COUNTY	ROUTE	KILOMETER POST TOTAL PROJECT	SHEET No	TOTAL SHEETS
04	Ala	80	1.6/2.7	396 R2	643

REGISTERED ELECTRICAL ENGINEER 05/15/06 DATE

1-29-07
PLANS APPROVAL DATE

REGISTERED PROFESSIONAL ENGINEER JENS ERL INDSSON No. 8249 Exp. 9/30/08 ELECTRICAL STATE OF CALIFORNIA

PB POWER, Inc.
A Parsons Brinckerhoff Company
303 Second St., Suite 700N
San Francisco, CA 94107-1317

The State of California or its officers or agents shall not be responsible for the accuracy or completeness of electronic copies of this plan sheet.

To get to the Caltrans web site, go to: http://www.dot.ca.gov

Caltrans Metric

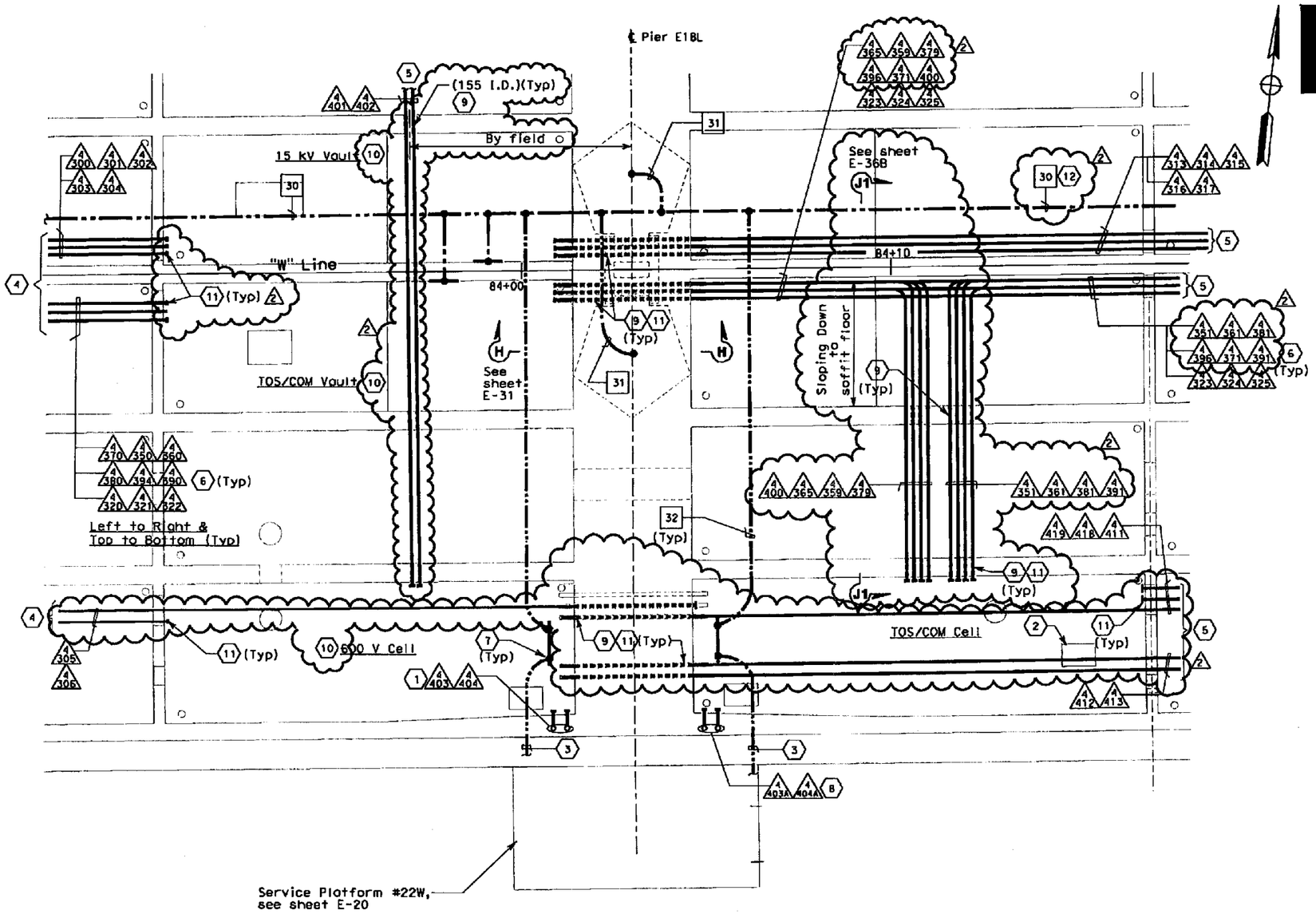

SHEET NOTES:

1. Conduit up to PB-LTG located in Barrier. See sheet E-11.
2. Preformed Loops PL-W08 Splicebox PB-4D.
3. For continuation, see sheet E-20.
4. See sheet E-13 for continuation.
5. See sheet E-14 for continuation.
6. Refer to sheets E-32, E-33 and E-34 for conduit support location. Refer to sheet E-35 and E-36 for conduit support details.
7. See Detail 1 on sheet E-43.
8. Conduit up to PB-COM located in barrier. See Sheet E-11.
9. Provided with pipe sleeves for conduits.
10. The Contractor to provide non-removable warning sign above or before the girder and soffit access entry. The sign shall read "Caution - Authorized Personnel Only - Electricals Inside".
11. Conduit end shall be provided with ground bushings. Bond all conduits with #2 AWG bare copper wire, connected to the ground bar, see Detail 1, sheet E-43.
12. The system ground, #500 kcMIL shall be routed along the 15 kV conduit run or conduit as shown with U-bolts strap to the conduit.

NOTES:

1. References:
   - TOS equipment is shown for conduit routing only. For typical details of TOS controller and devices, see sheets starting at E-204.
   - For types of pull boxes, splice boxes and enclosures, see sheet E-44.
   - For overall grounding plan, see sheet E-42.
   - For conduit and cable tray schedules, see sheets starting at E-224.
2. For overall plan of this area, see sheets E-13 and E-14.
3. Once the conduits are installed on the TOS/COM, 15 kV vaults, 600 V and TOS/COM cells, Contractor to grout the conduit block outs.

DETAIL 2 - PIER 18L

REGISTERED PROFESSIONAL ENGINEER FADI WALIEDDINE No. 11465 Exp. 12/31/2009 ELECTRICAL STATE OF CALIFORNIA

MARK	DATE	DESCRIPTIONS	REV	CK	CCO
2	01/15/09	Added pipe sleeves, sheet notes 9, 10, 11, 12 and note 3. Relocated conduits.	EJL	FSW	78/80
1	8/29/08	Added Conduits 4403A and 4404A to PB-COM.	JH	EJL	Light Pole Base

REVISIONS

CONTRACT CHANGE ORDER NO. 118
SHEET 3 OF 11 6/22/09

DETAILS
ROADWAY AND GIRDER LEVEL WESTBOUND GIRDER CONDUIT INSTALLATION
SCALE 1:60

E-25

THIS PLAN ACCURATE FOR ELECTRICAL WORK ONLY.

CALCULATED/DESIGNED BY	FK	DATE 2/06	REVISED BY
CHECKED BY	AB	2/06	DATE REVISED

DESIGN OVERSIGHT: BEHZAD GOLEMOHAMMADI

STATE OF CALIFORNIA - DEPARTMENT OF TRANSPORTATION

Caltrans

LAST REVISION 00-00-00 | DATE PLOTTED => 1/16/2009 | TIME PLOTTED => 10:00:36 AM

FOR REDUCED PLANS ORIGINAL SCALE IS IN MILLIMETERS 0 20 40 60 80

DGN FILE =>T:\13103\MS\pse\DTD-Contract 1\CCO\Electrical\CCO-80 | Conduit rack & embedd struts\401201uo025r2.dgn
USERNAME =>llorico | CU 04251 | EA 0120L1

DIST	COUNTY	ROUTE	KILOMETER POST TOTAL PROJECT	SHEET No	TOTAL SHEETS
04	Ala	80	1.6/2.7	397 R1	643

REGISTERED ELECTRICAL ENGINEER 05/15/06 DATE

1-29-07
PLANS APPROVAL DATE

REGISTERED PROFESSIONAL ENGINEER JENS ERLINGSSON No. 8249 EXP. 9/30/08 ELECTRICAL STATE OF CALIFORNIA

PB POWER, Inc.
A Parsons Brinckerhoff Company
303 Second St., Suite 700N
San Francisco, CA 94107-1317

The State of California or its officers or agents shall not be responsible for the accuracy or completeness of electronic copies of this plan sheet.

To get to the Caltrans web site, go to: http://www.dot.ca.gov

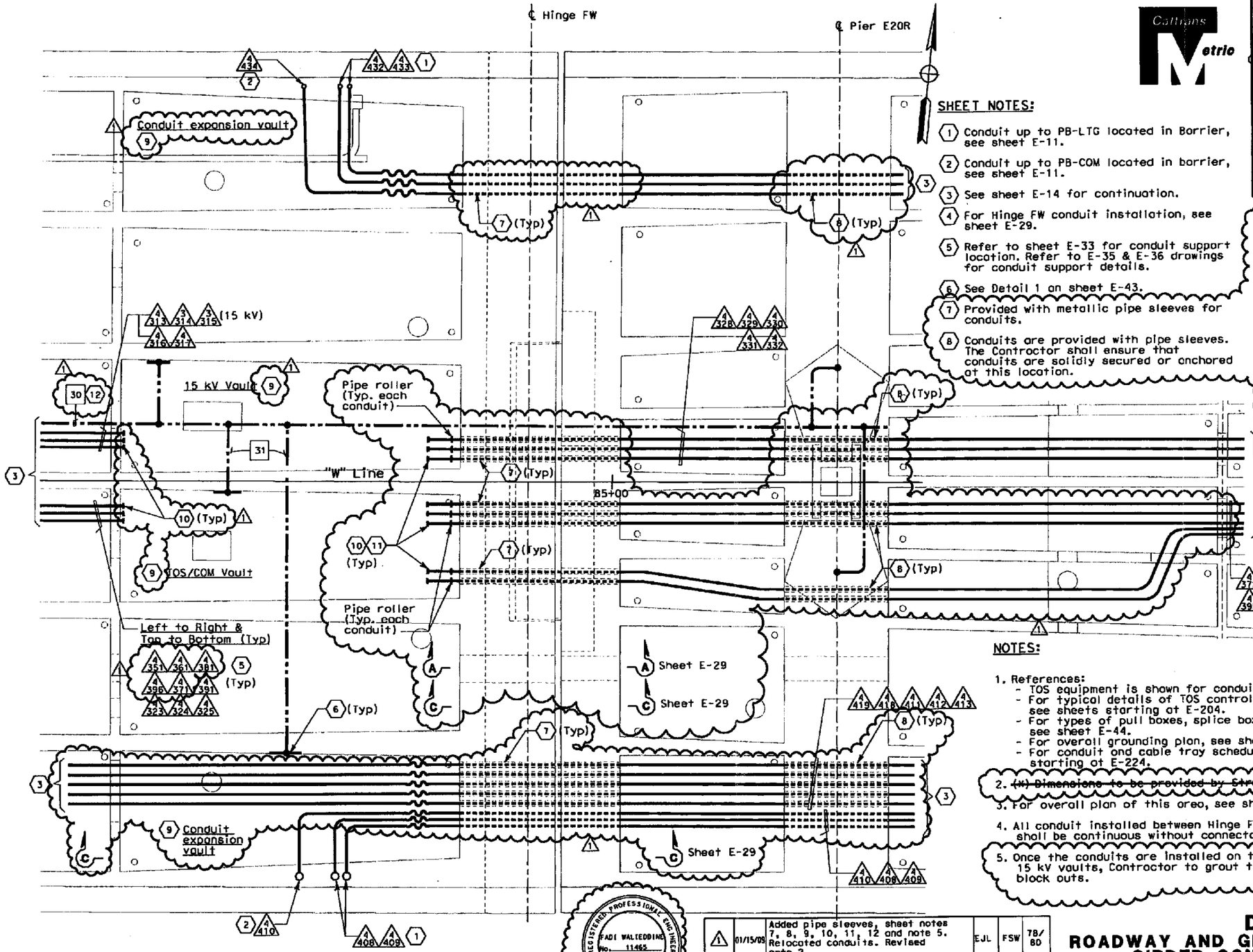

SHEET NOTES:

1. Conduit up to PB-LTG located in Barrier, see sheet E-11.
2. Conduit up to PB-COM located in barrier, see sheet E-11.
3. See sheet E-14 for continuation.
4. For Hinge FW conduit installation, see sheet E-29.
5. Refer to sheet E-33 for conduit support location. Refer to E-35 & E-36 drawings for conduit support details.
6. See Detail 1 on sheet E-43.
7. Provided with metallic pipe sleeves for conduits.
8. Conduits are provided with pipe sleeves. The Contractor shall ensure that conduits are solidly secured or anchored at this location.
9. The Contractor to provide non-removable warning sign above or before the girder and soffit access entry. The sign shall read "Caution-Authorized personnel only-Electricals inside"
10. Conduit end shall be provided with ground bushings. Bond all conduits with #2 awg bare copper wire, connected to the ground bar, see Detail 1, sheet E-43.
11. The ground conductor connected to the ground bar, shall be provided for a seismic expansion of 520 mm movement. Conductor may rest on vault floor.
12. The system ground, #500 KCMIL shall be routed along the 15 kv conduit run or conduit as shown with U-bolts strap to the conduit.

NOTES:

1. References:
   - TOS equipment is shown for conduit routing only.
   - For typical details of TOS controller and devices, see sheets starting at E-204.
   - For types of pull boxes, splice boxes and enclosures, see sheet E-44.
   - For overall grounding plan, see sheet E-42.
   - For conduit and cable tray schedules, see sheets starting at E-224.
2. ~~(N) Dimensions to be provided by Structural.~~ DELETED
3. For overall plan of this area, see sheet E-14.
4. All conduit installed between Hinge FW and Pier E20L shall be continuous without connectors or fittings.
5. Once the conduits are installed on the TOS/COM and 15 kV vaults, Contractor to grout the conduit block outs.

DETAIL 3 - HINGE FW

REGISTERED PROFESSIONAL ENGINEER FADI WALTEDDINE No. 11465 EXP. 12/31/2009 ELECTRICAL STATE OF CALIFORNIA

MARK	DATE	DESCRIPTIONS	REV	CK	CCO
1	01/15/09	Added pipe sleeves, sheet notes 7, 8, 9, 10, 11, 12 and note 5. Relocated conduits. Revised note 2.	EJL	FSW	78/80

REVISIONS

CONTRACT CHANGE ORDER NO. 118
SHEET 4 OF 11 6/22/09

DETAILS
ROADWAY AND GIRDER LEVEL WESTBOUND GIRDER CONDUIT INSTALLATION
SCALE 1:60

E-26

DATE	REVISED BY	DATE	CALCULATED/DESIGNED BY	CHECKED BY
2/06	FK	2/06	AB	

DESIGN OVERSIGHT: BEHZAD GOLEMOHAMMADI

STATE OF CALIFORNIA - DEPARTMENT OF TRANSPORTATION

Caltrans

FOR REDUCED PLANS ORIGINAL SCALE IS IN MILLIMETERS 0 20 40 60 80

DGN FILE => T:\13103\MS\pse\DTO-Contract 1\CCO\Electrical\CCO-80
USERNAME => llorico

Conduit rack & embedd struts\40120luo026r1.dgn
CU 04251 EA 0120L1

LAST REVISION 00-00-00
DATE PLOTTED => 1/16/2009
TIME PLOTTED => 10:01:31 AM

DIST	COUNTY	ROUTE	KILOMETER POST TOTAL PROJECT	SHEET NO	TOTAL SHEETS
04	Ala	80	1.6/2.7	398 R1	643

REGISTERED ELECTRICAL ENGINEER 05/15/06 DATE

1-29-07
PLANS APPROVAL DATE

REGISTERED PROFESSIONAL ENGINEER JENS ERLINGSSON No. 8249 Exp. 9/30/08 ELECTRICAL STATE OF CALIFORNIA

PB POWER, Inc.
A Parsons Brinckerhoff Company
303 Second St., Suite 700N
San Francisco, CA 94107-1317

The State of California or its officers or agents shall not be responsible for the accuracy or completeness of electronic copies of this plan sheet.

To get to the Caltrans web site, go to: http://www.dot.ca.gov

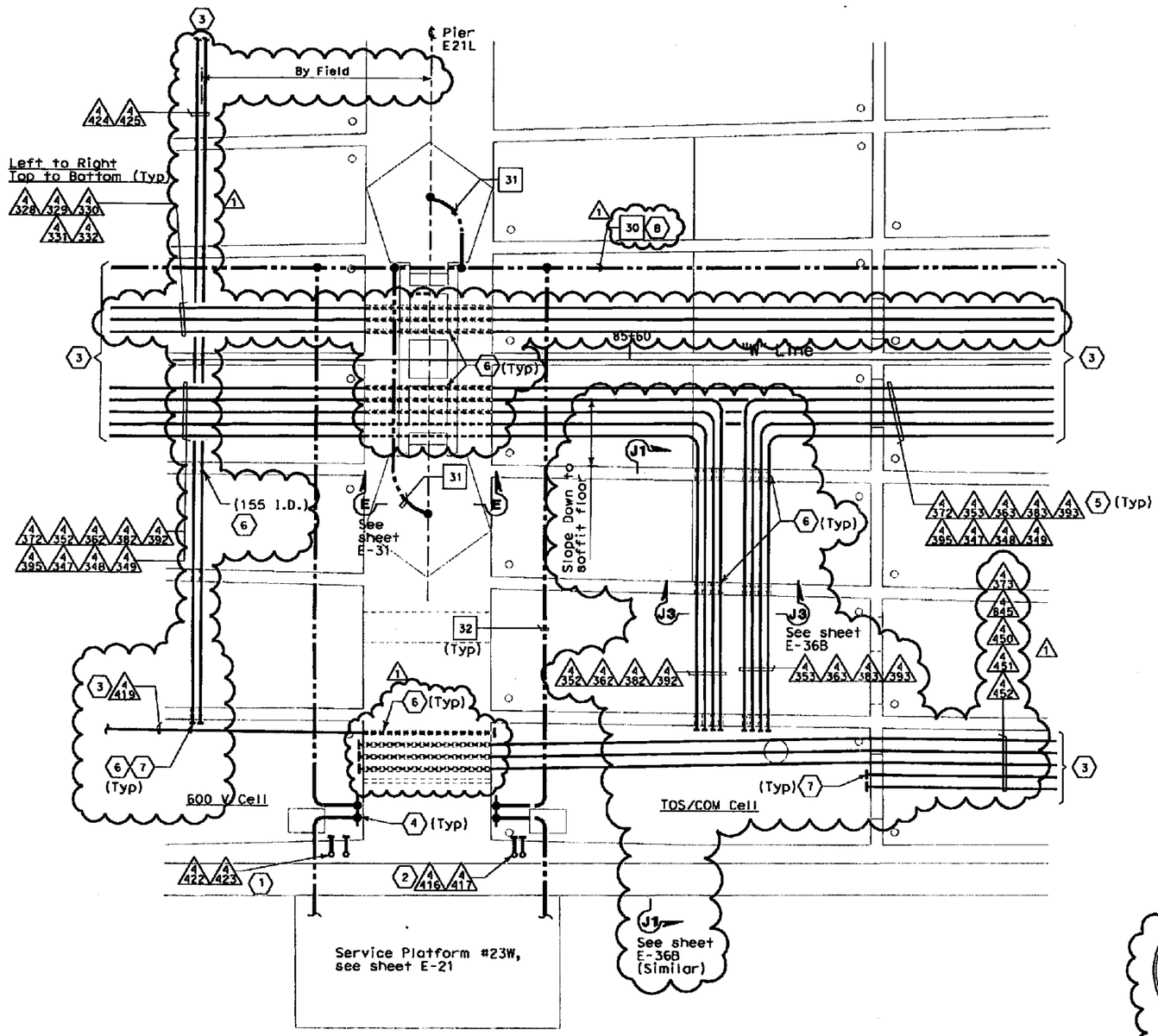

DETAIL 4 - PIER E21L

SHEET NOTES:

1. Conduit up to PB-LTG located in Barrier, see sheet E-12.
2. Conduit up to PB-COM located in barrier, see sheet E-12.
3. See sheet E-15 for continuation.
4. See Detail 1 on sheet E-43.
5. Refer to sheets E-33 for conduit support location. Refer to E-35 and E-36 drawings for conduit support details.
6. Provided with pipe sleeves for conduits.
7. Conduit end shall be provided with ground bushings. Bond all conduits with #2 awg bare copper wire, connected to the ground bar, see Detail 1, sheet E-43.
8. The system ground, #500 kcMIL shall be routed along the 15 kV conduit run or conduit as shown with U-bolts strap to the conduit.

NOTES:

1. References:
   - TOS equipment is shown for conduit routing only. For typical details of TOS controller and devices, see sheets starting at E-204.
   - For types of pull boxes, splice boxes and enclosures, see sheet E-44.
   - For overall grounding plan, see sheet E-42.
   - For conduit and cable troy schedules, see sheets starting at E-224.
2. ~~(*) Dimensions to be provided by Structural.~~ DELETED
3. For overall plan of this area, see sheet E-15.
4. Once the conduits are installed on the 600 V and TOS/COM cells, Contractor to grout the conduit block outs.

REGISTERED PROFESSIONAL ENGINEER FADI WALIEDDINE No. 17465 Exp. 12/31/2009 ELECTRICAL STATE OF CALIFORNIA

MARK	DATE	DESCRIPTIONS	REV	CK	
1	01/15/09	Added pipe sleeves, sheet notes 6, 7,8 and note 4. Relocated conduits. Revised note 2.	EJL	FSW	78/80
		REVISIONS			

CONTRACT CHANGE ORDER NO. 118
SHEET 5 OF 11 6/22/09

DETAILS
ROADWAY AND GIRDER LEVEL WESTBOUND GIRDER CONDUIT INSTALLATION
SCALE 1:60

E-27

THIS PLAN ACCURATE FOR ELECTRICAL WORK ONLY.

STATE OF CALIFORNIA - DEPARTMENT OF TRANSPORTATION
Caltrans
DESIGN OVERSIGHT: BEHZAD GOLEMOHAMMADI
CALCULATED/DESIGNED BY: FK | CHECKED BY: AB
DATE REVISED: 2/06 | REVISED BY: 2/06

DATE PLOTTED => 1/16/2009
TIME PLOTTED => 10:02:22 AM
LAST REVISION 00-00-00

FOR REDUCED PLANS ORIGINAL SCALE IS IN MILLIMETERS 0 20 40 60 80

DGN FILE =>T:\13103\MS\pse\DTD-Contract 1\CCO\Electrical\CCO-80
USERNAME =>llorico
Conduit rack & embedd struts\40120lua027r1.dgn
CU 04251 | EA 0120L1

DIST	COUNTY	ROUTE	KILOMETER POST TOTAL PROJECT	SHEET NO	TOTAL SHEETS
04	Ala	80	1.6/2.7	399 R1	643

REGISTERED ELECTRICAL ENGINEER 05/15/08 DATE

1-29-07
PLANS APPROVAL DATE

PB POWER, Inc.
A Parsons Brinckerhoff Company
303 Second St., Suite 700N
San Francisco, CA 94107-1317

The State of California or its officers or agents shall not be responsible for the accuracy or completeness of electronic copies of this plan sheet.

To get to the Caltrans web site, go to: http://www.dot.ca.gov

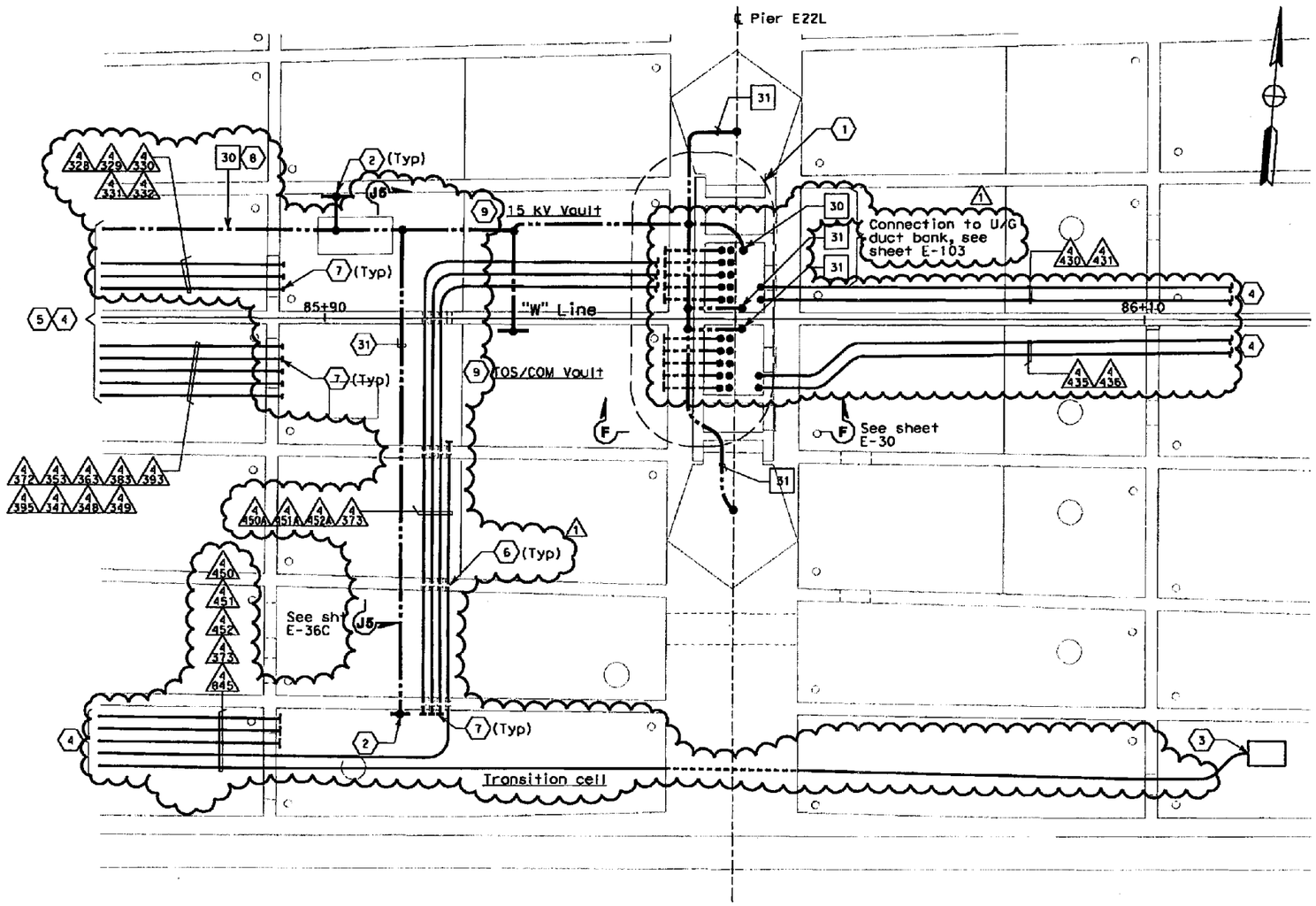

SHEET NOTES:

1. For Pier E22L conduit installation, see E-30.
2. See Detail 1 on sheet E-43.
3. Preformed Loops PL-W09 Splicebox PB-4D. See E-44.
4. See sheet E-15 for continuation.
5. Refer to sheet E-34 for conduit support location. Refer to E-35 and E-36 drawings for conduit support details.
6. Provided with pipe sleeves for conduits.
7. Conduit end shall be provided with ground bushings. Bond all conduits with #2 awg bare copper wire, connected to the ground bar, see Detail 1, sheet E-43.
8. The system ground, #500 kcMIL shall be routed along the 15 kV conduit run or conduit as shown with U-bolts strap to the conduit.
9. The Contractor to provide non-removable warning sign above or before the girder and soffit access entry. The sign shall read "Caution - Authorized Personnel Only - Electricals Inside".

NOTES:

1. References:
   - TOS equipment is shown for conduit routing only. For typical details of TOS controller and devices, see sheets starting at E-204.
   - For types of pull boxes, splice boxes and enclosures, see sheet E-44.
   - For overall grounding plan, see sheet E-42.
   - For conduit and cable tray schedules, see sheets starting at E-224.
2. ~~(X) Dimensions to be provided by Structural.~~ DELETED
3. For overall plan of this area, see sheet E-15.
4. Once the conduits are installed on the TOS/COM, 15 kV vaults and Transition cell, Contractor to grout the conduit block outs.

DETAIL 5 - PIER E22L CONDUIT PLAN

REGISTERED PROFESSIONAL ENGINEER FADI WALIEDDINE No. 11465 Exp. 12/31/2009 ELECTRICAL STATE OF CALIFORNIA

MARK	DATE	DESCRIPTIONS	REV	CK	
1	01/15/09	Added pipe sleeves, sheet notes 6, 7,8,9 and note 4. Relocated conduits. Revised sheet note 5 and note 2.	EJL	FSW	78/80
		REVISIONS			

CONTRACT CHANGE ORDER NO. 118
SHEET 6 OF 11 6/22/09

DETAILS
ROADWAY AND GIRDER LEVEL WESTBOUND GIRDER CONDUIT INSTALLATION
SCALE 1:60

E-28

THIS PLAN ACCURATE FOR ELECTRICAL WORK ONLY.

STATE OF CALIFORNIA - DEPARTMENT OF TRANSPORTATION
Caltrans

DESIGN OVERSIGHT: BEHZAD GOLEMOHAMMADI
CALCULATED/DESIGNED BY: FK 2/06
CHECKED BY: AB 2/06
REVISED BY / DATE REVISED

LAST REVISION 00-00-00
DATE PLOTTED => 1/16/2009
TIME PLOTTED => 10:04:14 AM

FOR REDUCED PLANS ORIGINAL SCALE IS IN MILLIMETERS 0 20 40 60 80

DGN FILE =>T:\13103\MS\pse\DTD-Contract 1\CCO\Electrical\CCO-80 | Conduit rack & embedd struts\401201ua028r1.dgn
USERNAME =>florico | CU 04251 | EA 0120L1

DIST	COUNTY	ROUTE	KILOMETER POST TOTAL PROJECT	SHEET No	TOTAL SHEETS
04	Ala	80	1.6/2.7	401 R1	643

REGISTERED ELECTRICAL ENGINEER 05/15/06 DATE

1-29-07
PLANS APPROVAL DATE

PB POWER, Inc.
A Parsons Brinckerhoff Company
303 Second St., Suite 700N
San Francisco, CA 94107-1317

REGISTERED PROFESSIONAL ENGINEER JENS ERLINGSSON No. 8249 EXP. 9/30/08 ELECTRICAL STATE OF CALIFORNIA

The State of California or its officers or agents shall not be responsible for the accuracy or completeness of electronic copies of this plan sheet.

To get to the Caltrans web site, go to: http://www.dot.ca.gov

Caltrans Metric

SHEET NOTES:

1. Cable tray support, wall mounted.
2. For continuation, see conduit layout plan, refer to sheet E-15.
3. Conduit end shall be provided with ground bushings. Bond all conduits with #2 awg bare copper wire, connected to the ground bar, see Detail 1, sheet E-43.
4. For continuation, see sheet E-81.
5. ~~All embedded conduit location, arrangement and dimensions shall be provided on Structural Plans.~~ Rigid steel conduit elbows shall be 610 mm minimum radius.

NOTES:

1. Reference:
   - For typical pull boxes and enclosures, see sheet E-44.
2. ~~* Dimensions to be provided by Structural~~ DELETED

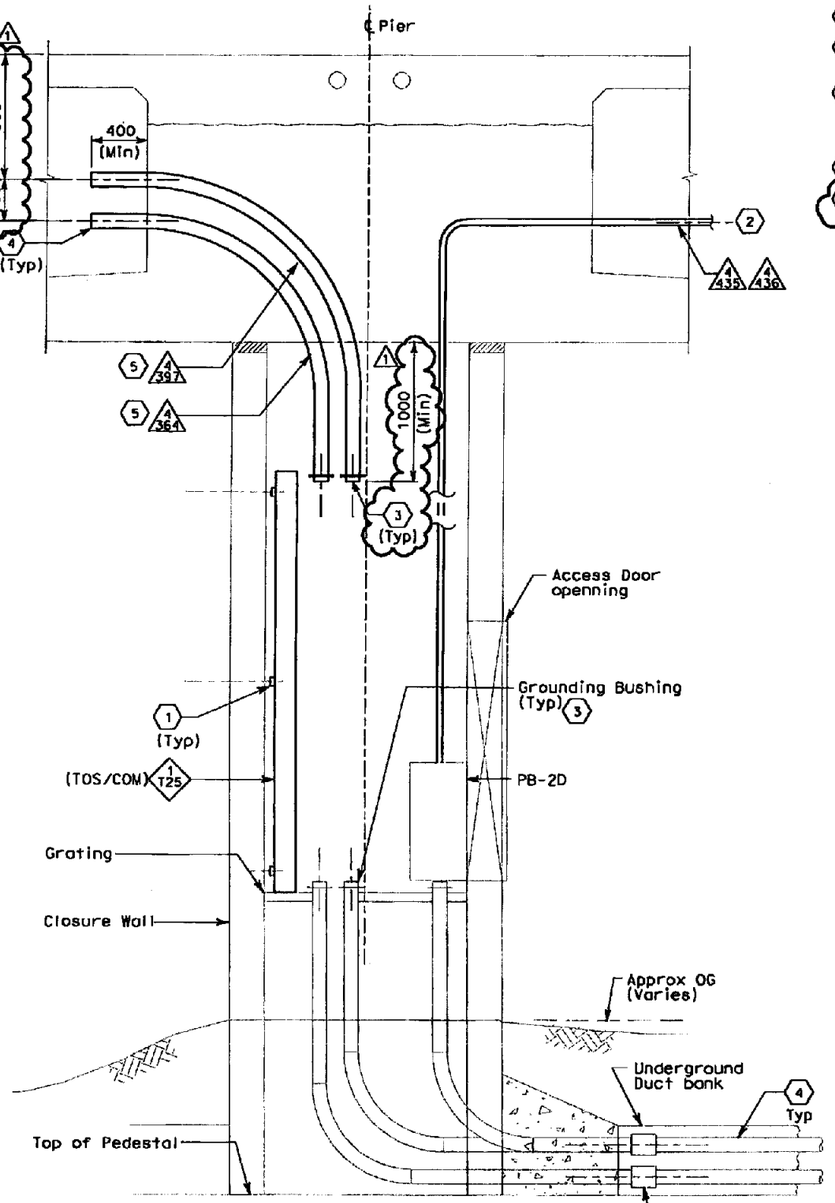

SECTION F-F
PIER E22L

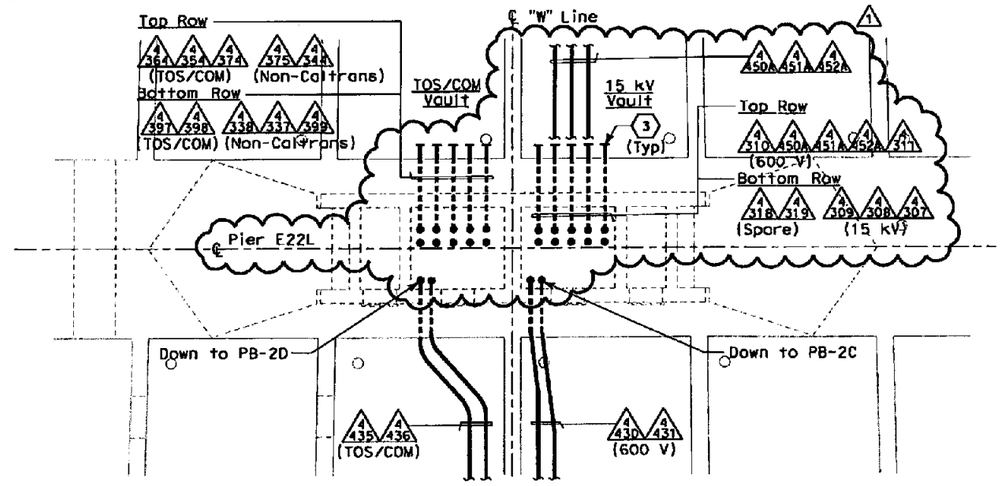

PIER E22L- GIRDER
(CONDUIT PLAN)
SCALE 1:50

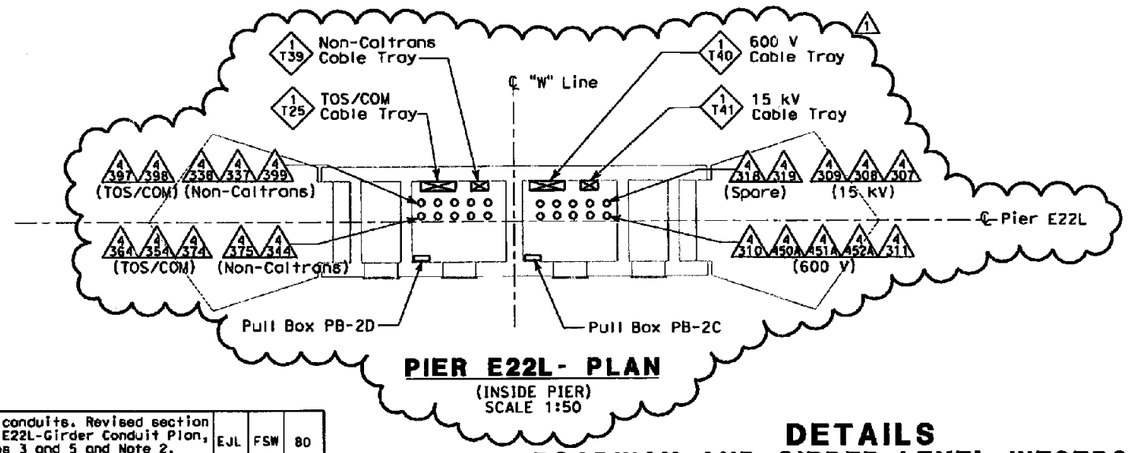

PIER E22L- PLAN
(INSIDE PIER)
SCALE 1:50

DETAILS
ROADWAY AND GIRDER LEVEL WESTBOUND PIER CONDUIT INSTALLATION
SCALE 1:20

REGISTERED PROFESSIONAL ENGINEER FADI WALIEDDINE No. 11465 Exp. 12/31/2009 ELECTRICAL STATE OF CALIFORNIA

MARK	DATE	DESCRIPTIONS	REV	CK	
1	01/15/09	Relocated conduits. Revised section F-F, Pier E22L-Girder Conduit Plan, Sheet Notes 3 and 5 and Note 2. Added Pier E22L-plan inside pier.	EJL	FSW	80

REVISIONS

CONTRACT CHANGE ORDER NO. 118
SHEET 7 OF 11 6/22/09

THIS PLAN ACCURATE FOR ELECTRICAL WORK ONLY.

ALL DIMENSIONS ARE IN MILLIMETERS UNLESS OTHERWISE SHOWN

E-30

STATE OF CALIFORNIA - DEPARTMENT OF TRANSPORTATION
Caltrans
DESIGN OVERSIGHT
BEHZAD GOLEMOHAMMADI
CALCULATED/DESIGNED BY FK
CHECKED BY AB
DATE REVISED 2/06
DATE REVISED 2/06
LAST REVISION 00-00-00
DATE PLOTTED => 1/14/2009
TIME PLOTTED => 4:38:49 PM

FOR REDUCED PLANS ORIGINAL SCALE IS IN MILLIMETERS 0 20 40 60 80

DGN FILE =>T:\13103\MS\pse\OTD-Contract 1\CCO\Electrical\CCO-80 Conduit rack & embedd struts\40120lua030r1.dgn
USERNAME =>llorico
CU 04251
EA 0120L1

DIST	COUNTY	ROUTE	KILOMETER POST TOTAL PROJECT	SHEET NO	TOTAL SHEETS
04	Ala	80	1.6/2.7	422 R1	643

REGISTERED ELECTRICAL ENGINEER 05/15/06 DATE

1-29-07
PLANS APPROVAL DATE

REGISTERED PROFESSIONAL ENGINEER JENS ERLINGSSON No. 8249 Exp. 9/30/09 ELECTRICAL STATE OF CALIFORNIA

PB POWER, Inc.
A Parsons Brinckerhoff Company
303 Second St., Suite 700N
San Francisco, CA 94107-1317

The State of California or its officers or agents shall not be responsible for the accuracy or completeness of electronic copies of this plan sheet.

Caltrans now has a web site! To get to the web site, go to http://www.dot.ca.gov

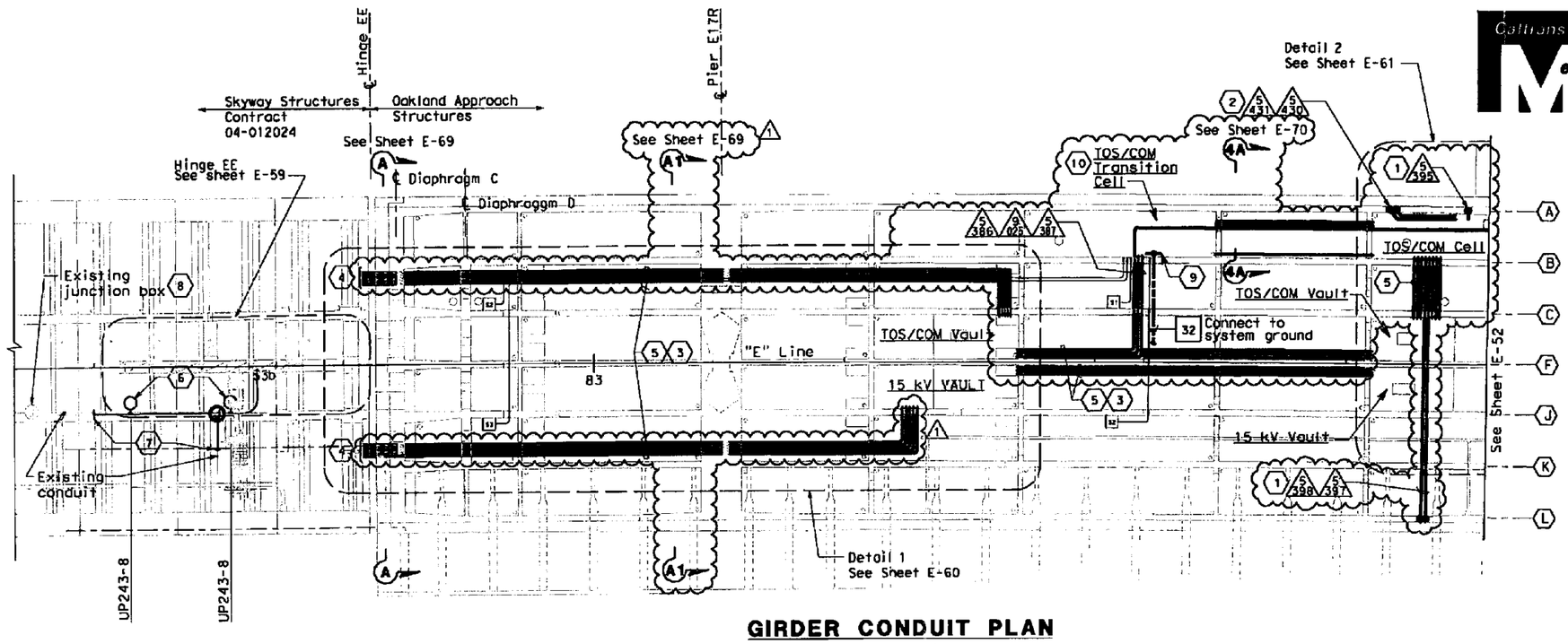

GIRDER CONDUIT PLAN

(FRAME 1)

SHEET NOTES:

1. Conduit up to PB-LTG and PB-COM located in barrier, see sheet E-49.
2. Conduit up to Ltg. Pole with CCTV-E03. See sheet E-72.
3. Conduit elbows shall be 610 mm minimum radius.
4. Connect conduits to Skyway Structures, See sheet E-59.
5. For conduit numbers, see sheets E-60 & E-61.
6. Lighting fixture type F4. Compact fluorescent, non-metallic vaportight housing with guard and clear glass globe, U.L. listed for wet and marine environment, 120 VAC, high frequency ballast and (1) 32 watt CFM32/GX24Q lamp. Stanchion mounting, see detail.
7. The Contractor shall intercept existing conduit and extend existing circuit/ conductors as shown on partial wiring diagram.
8. Splice conductors inside existing junction box.
9. See Detail 1, refer to sheet E-75.
10. Conduit ends shall be provided with ground bushing. Bond all conduits with #2 AWG bare copper wire connected to the ground bar.

NOTES:

1. References:
   - TOS equipment is shown for conduit routing only. For typical details of TOS controller and devices, see sheets starting at E-204.
   - For overall grounding plan, see sheet E-74.
   - For conduit and cable tray schedules, see sheets starting at E-224.
   - For conduit support, see sheets E-65 thru E-68.
2. Install conduits only.

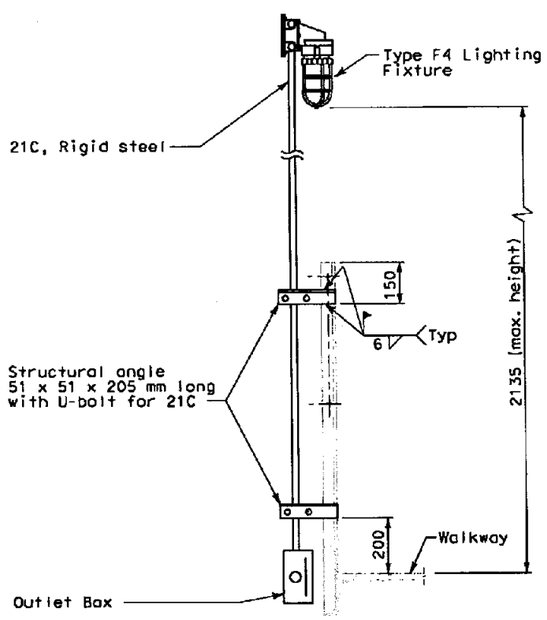

GIRDER WALKWAY LIGHTING STANCHION MOUNTED

SCALE: 1:10

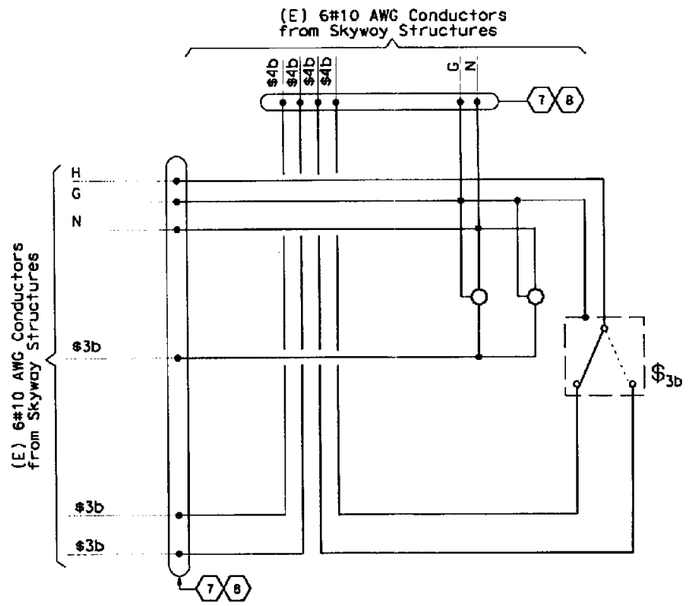

PARTIAL WIRING DIAGRAM UP-243-8

(NO SCALE)

REGISTERED PROFESSIONAL ENGINEER FADI WALIEDDINE No. 11465 Exp. 12/31/2009 ELECTRICAL STATE OF CALIFORNIA

MARK	DATE	DESCRIPTIONS	REV	CK	CCO No.
1	5/29/09	Revised location of conduits and sheet notes 3. Added sheet notes 9, 10, conduits 5-387, 5-395, 5-397 and 5-398, system ground connection at TOS/COM transition cell.	EJL	FSW	113

REVISIONS

CONTRACT CHANGE ORDER NO. 113
SHEET 8 OF 11 6/22/09

ROADWAY AND GIRDER LEVEL EASTBOUND (LIGHTING AND ELECTRICAL SYSTEMS)

SCALE: 1:200

E-51

THIS PLAN IS ACCURATE FOR ELECTRICAL WORK ONLY.

FOR REDUCED PLANS ORIGINAL SCALE IS IN MILLIMETERS 0 20 40 60 80

DGN FILE =>T:\13103\MS\pse\OTD-Contract 1\CCO\Electrical\CCO-113 EB Conduit Rack\40120lua051r1.dgn
USERNAME =>ricafrente
CU 04251
EA 0120L1

STATE OF CALIFORNIA - DEPARTMENT OF TRANSPORTATION
Caltrans
DESIGN OVERSIGHT
BEHZAD GOLEMOHAMMADI
CALCULATED/DESIGNED BY
CHECKED BY
FK
AB
DATE 2/06
DATE REVISED
REVISED BY
LAST REVISION 00-00-00
DATE PLOTTED => 5/28/2009
TIME PLOTTED => 2:57:50 PM

DIST	COUNTY	ROUTE	KILOMETER POST TOTAL PROJECT	SHEET No	TOTAL SHEETS
04	Alo	80	1.6/2.7	431 R1	643

REGISTERED ELECTRICAL ENGINEER 05/15/06 DATE

1-29-07
PLANS APPROVAL DATE

REGISTERED PROFESSIONAL ENGINEER JENS ERLINGSSON No. 8249 Exp. 9/30/09 ELECTRICAL STATE OF CALIFORNIA

PB POWER, Inc.
A Parsons Brinckerhoff Company
303 Second St., Suite 700N
San Francisco, CA 94107-1317

The State of California or its officers or agents shall not be responsible for the accuracy or completeness of electronic copies of this plan sheet.

Caltrans now has a web site! To get to the web site, go to http://www.dot.ca.gov

Caltrans Metric

NOTES:

1. References:
   - TOS equipment is shown for conduit routing only. For typical details of TOS controller and devices see sheets starting at E-204.
   - For overall grounding plan, see sheet E-74.
   - For conduit and cable tray schedules, see sheets starting at E-224.
2. For overall plan of this area, see sheet E-51.
3. ~~(x) Dimensions to be provided by structural.~~ Deleted 1
4. Once the conduits are installed on the TOS/COM and 15 kV vaults, Contractor to grout the conduit block outs.
5. Refer to sheets E-65 and E-66 for conduit support location. Refer to E-67 and E-68 for conduit support details.

SHEET NOTES:

1. Coordinate installation ~~of conduits with Hinge EE~~ Structural details. Connect to existing conduits. 1
2. ~~Refer to sheets E-65 and E-66 for conduit support location. Refer to E-67 and E-68 for conduit support details.~~
3. See sheet E-51 for continuation.
4. See Detail 1. Refer to sheet E-75.
5. The segment of conduit through the hinge to this point, 800 mm beyond face of diaphragm, shall be installed first according to the structural construction sequence. Continuation of the conduits from this interface point shall be made using threaded conduit couplings.
6. Provided with pipe sleeves for conduits.
7. Conduits are provided with pipe sleeves. The Contractor shall ensure that conduits inside the pipe sleeve are solidly secured or anchored at this location. 1
8. The Contractor to provide non-removable warning sign above or before the girder access opening. The sign shall read "Caution - Authorized Personnel Only. Electricals Inside".
9. Conduit end shall be provided with ground bushing. Bond all conduits with #2 AWG bare copper wire, connected to the ground bar.
10. The system ground, #500 kcMIL shall be routed along the 15 kV conduit run or conduit as shown, anchored at each location of the conduit support rack.
11. Conduits for Strong Motion Detection System, see sheet E-174. 1

REGISTERED PROFESSIONAL ENGINEER FADI WALIEDDINE No. 11465 Exp. 12/31/2009 ELECTRICAL STATE OF CALIFORNIA 1

MARK	DATE	DESCRIPTIONS	REV	CK	CCO No.
1	5/29/09	Revised location of conduits. Added pipe sleeves, sheet notes 6, 7, 8, 9, 10, 11, notes 4, 5, conduits 5-387, sheet notes 1 and notes 3. Deleted sheet notes 2.	EJL	FSW	113

REVISIONS

CONTRACT CHANGE ORDER NO. 118
SHEET 9 OF 11 6/22/09

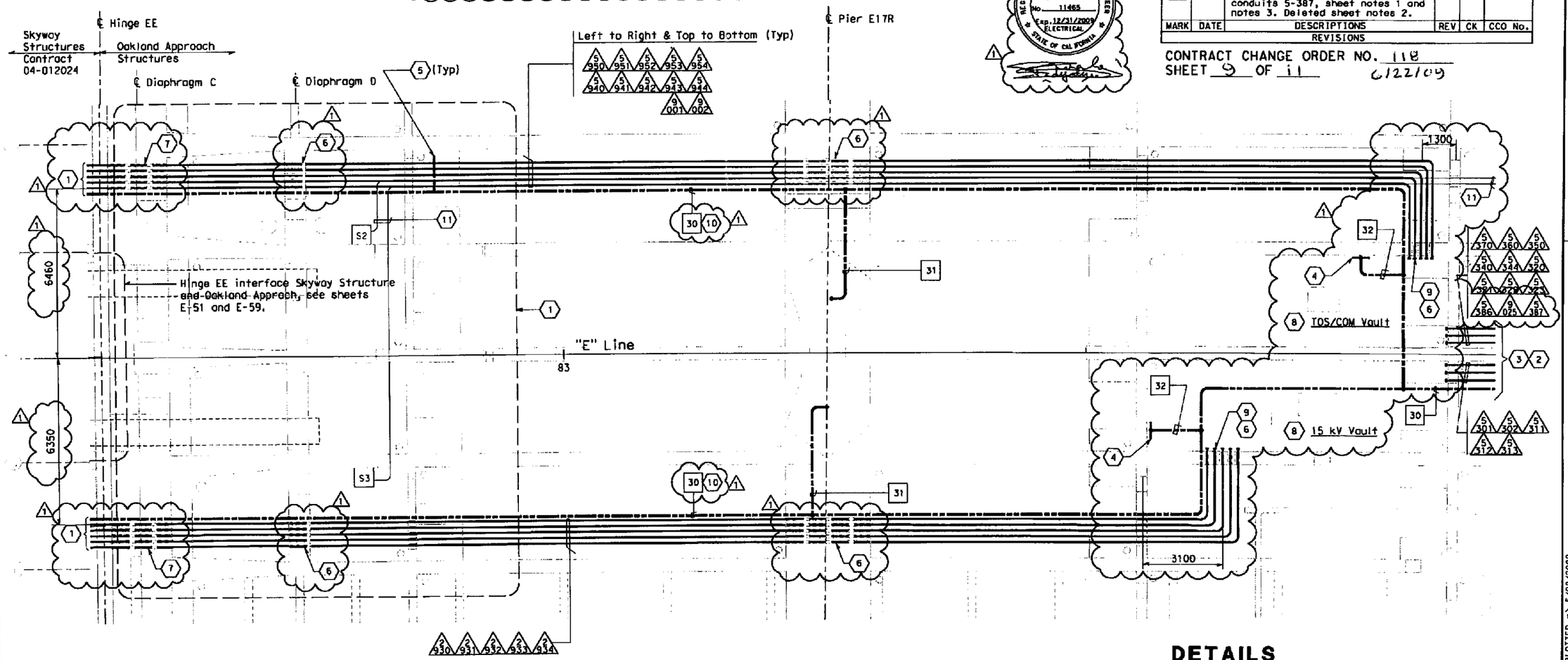

DETAIL 1
HINGE EE AND PIER E17R
SCALE: 1:75

DETAILS
ROADWAY AND GIRDER LEVEL EASTBOUND GIRDER CONDUIT INSTALLATION
SCALE AS NOTED

E-60

STATE OF CALIFORNIA - DEPARTMENT OF TRANSPORTATION
Caltrans

DESIGN OVERSIGHT: BEHZAD GOLEMOHAMMADI

CALCULATED/ DESIGNED BY	FK	DATE 2/06	REVISED BY
CHECKED BY	AB	2/06	DATE REVISED

LAST REVISION 00-00-00 DATE PLOTTED => 5/28/2009 TIME PLOTTED => 2:59:38 PM

THIS PLAN ACCURATE FOR ELECTRICAL WORK ONLY.

FOR REDUCED PLANS ORIGINAL SCALE IS IN MILLIMETERS 0 20 40 60 80

DGN FILE =>T:\13103\WS\pse\OTD-Contract 1\CCO\Electrical\CCO-113 EB Conduit Rack\401201ua060r1.dgn
USERNAME =>ricafrente

CU 04251 EA 0120L1

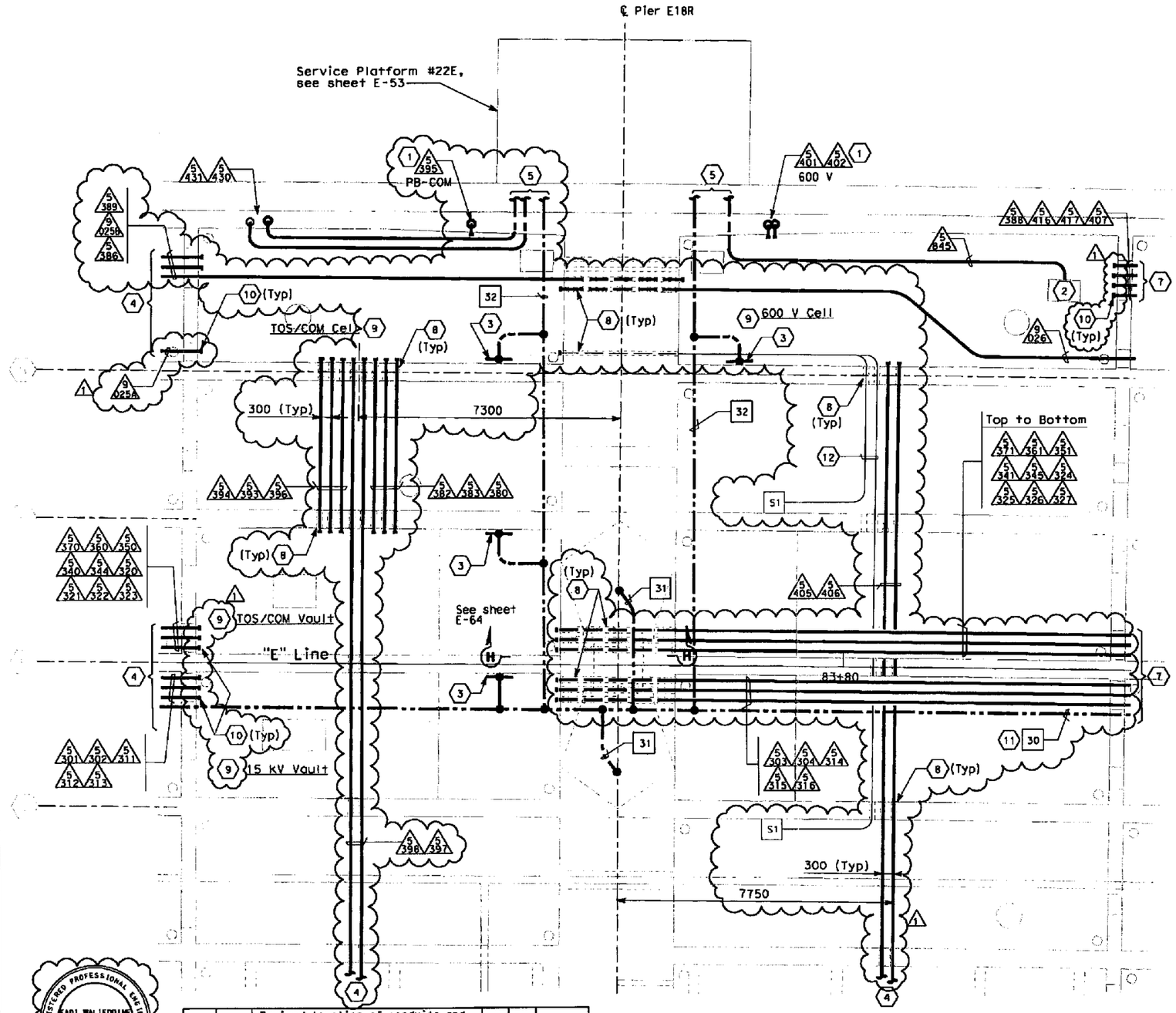

MARK	DATE	DESCRIPTIONS	REV	CK	CCO No.
1	5/29/09	Revised location of conduits and sheet notes 1. Added pipe sleeves, conduits 5-389, 5-397, 5-398 and 9-025A, 9-025B, sheet notes 8, 9, 10, 11, 12, notes 4 and 5. Deleted sheet notes 6 and notes 2.	EJL	FSW	113

REVISIONS

CONTRACT CHANGE ORDER NO. 118
SHEET 10 OF 11 6/22/09

DETAIL 2
PIER E18R CONDUIT PLAN

DIST	COUNTY	ROUTE	KILOMETER POST TOTAL PROJECT	SHEET No	TOTAL SHEETS
04	Ala	80	1.6/2.7	432 R1	643

REGISTERED ELECTRICAL ENGINEER 05/15/06 DATE

1-29-07
PLANS APPROVAL DATE

PB POWER, Inc.
A Parsons Brinckerhoff Company
303 Second St., Suite 700N
San Francisco, CA 94107-1317

REGISTERED PROFESSIONAL ENGINEER JENS ERLINGSSON No. 8249 Exp. 9/30/08 ELECTRICAL STATE OF CALIFORNIA

This State of California or its officers or agents shall not be responsible for the accuracy or completeness of electronic copies of this plan sheet.

Caltrans now has a web site! To get to the web site, go to http://www.dot.ca.gov

SHEET NOTES:

1. Conduit up to PB-LTG and PB-COM located in Barrier. See sheet E-49.
2. Preformed Loops PL-E09 Splicebox PB-4D. See E-44.
3. See Detail 1 on sheet E-75.
4. See sheet E-51 for continuation.
5. For continuation, see sheet E-53.
6. ~~Refer to sheets E-65 and E-66 for conduit support location. Refer to E-67 & E-68 for conduit support details.~~
7. See sheet E-52 for continuation.
8. Provided with pipe sleeves for conduits.
9. The Contractor to provide non-removable warning sign above or before the girder access opening. The sign shall read "Caution - Authorized Personnel Only. Electricals Inside".
10. Conduit end shall be provided with ground bushing. Bond all conduits with #2 AWG bare copper wire, connected to the ground bar, see Detail 1, sheet E-75.
11. The system ground, #500 kcMIL shall be routed along the 15 kV conduit run or conduit as shown, anchored at each location of the conduit support rack.
12. Conduits for Strong Motion Detection System, see sheet E-175.

NOTES:

1. References:
   - TOS equipment is shown for conduit routing only, for typical details of TOS controller and devices see sheets starting at E-204.
   - For overall grounding plan, see sheet E-74.
   - For conduit and cable tray schedules, see sheets starting at E-224.
2. ~~(H) Dimensions to be provided by structural.~~ Deleted.
3. For overall plan of this area, see sheets E-51 and E-52.
4. Once the conduits are installed on the TOS/COM, 15 kV vaults, 600 V and TOS/COM cells, Contractor to grout the conduit block outs.
5. Refer to sheets E-65 and E-66 for conduit support location. Refer to E-67 and E-68 for conduit support details.

DETAILS
ROADWAY AND GIRDER LEVEL EASTBOUND GIRDER CONDUIT INSTALLATION
SCALE: 1:60

E-61

REGISTERED PROFESSIONAL ENGINEER FADI WALIEDDINE No. 11468 Exp. 12/31/2009 ELECTRICAL STATE OF CALIFORNIA

STATE OF CALIFORNIA - DEPARTMENT OF TRANSPORTATION
Caltrans District 4
DESIGN OVERSIGHT BEHZAD GOLEMOHAMMADI
CALCULATED/DESIGNED BY FK CHECKED BY AB
REVISED BY 2/06 DATE REVISED 2/06
LAST REVISION 00-00-00 DATE PLOTTED => 5/28/2009 TIME PLOTTED => 3:00:10 PM

FOR REDUCED PLANS ORIGINAL SCALE IS IN MILLIMETERS 0 20 40 60 80
DGN FILE =>T:\13103\MS\pse\OTD-Contract 1\CCO\Electrical\CCO-113 EB Conduit Rack\40120Iua061r1.dgn
USERNAME =>ricafrente
CU 04251 EA 0120L1

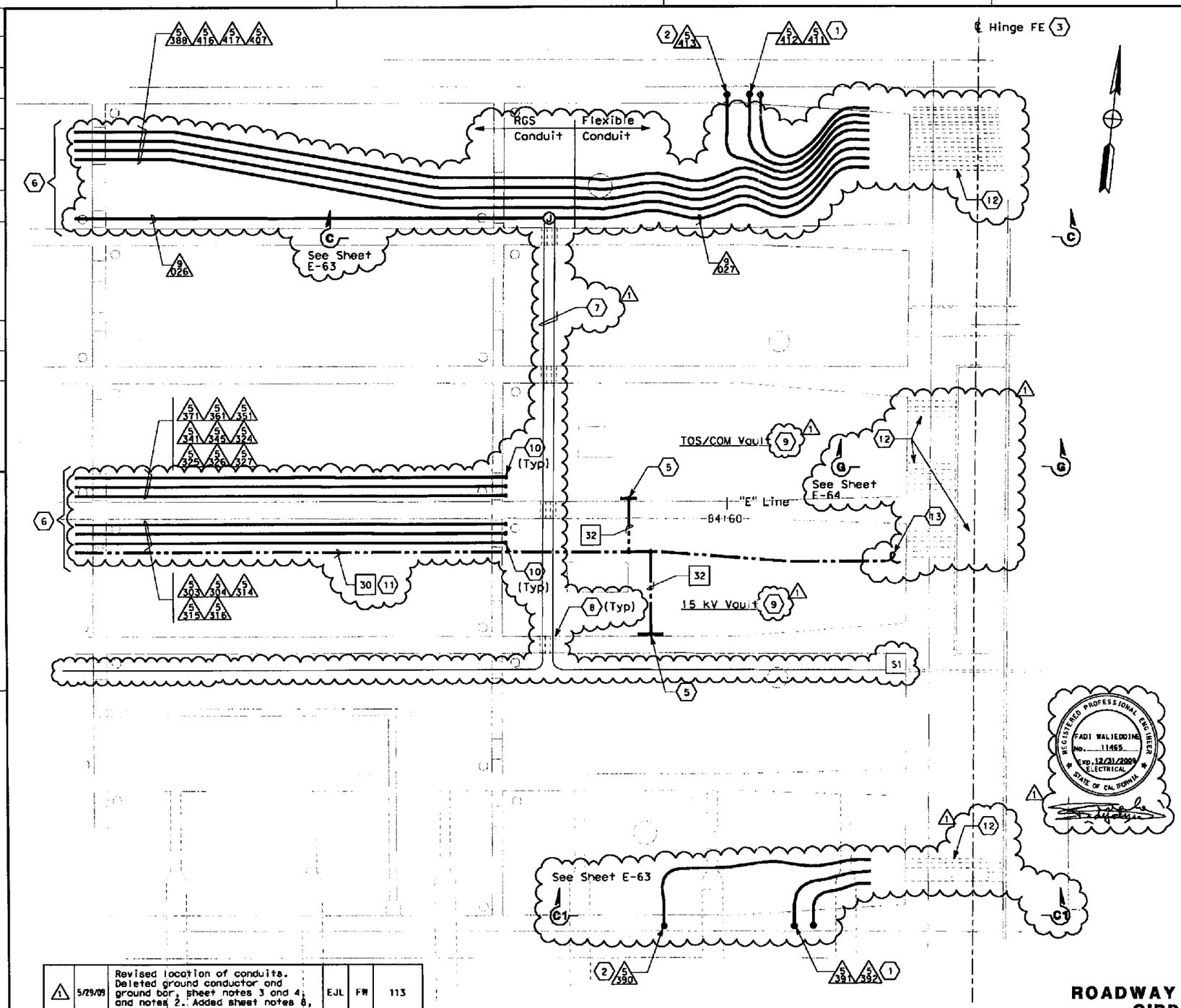

DIST	COUNTY	ROUTE	KILOMETER POST TOTAL PROJECT	SHEET No	TOTAL SHEETS
04	Ala	80	1.6/2.7	433 R1	643

REGISTERED ELECTRICAL ENGINEER 05/15/06 DATE

1-29-07
PLANS APPROVAL DATE

PB POWER, Inc.
A Parsons Brinckerhoff Company
303 Second St., Suite 700N
San Francisco, CA 94107-1317

The State of California or its officers or agents shall not be responsible for the accuracy or completeness of electronic copies of this plan sheet.

Caltrans now has a web site! To get to the web site, go to http://www.dot.ca.gov

SHEET NOTES:

1. Conduit up to PB-LTG located in Barrier. See sheet E-50.
2. Conduit up to PB-COM located in Barrier. See sheet E-50.
3. ~~For Hinge FE conduit installation, see sheets E-63 and E-64.~~
4. ~~Refer to sheets E-65 and E-66 for conduit support location. Refer to sheets E-67 and E-68 for conduit support details.~~
5. See Detail 1. Refer to sheet E-75.
6. See sheet E-52.
7. Conduits for Strong Motion Detection System, see sheet E-176.
8. Provided with pipe sleeves for conduits.
9. The Contractor to provide non-removable warning sign above or before the girder access opening. The sign shall read "Caution - Authorized Personnel Only. Electricals Inside".
10. Conduit end shall be provided with ground bushing. Bond all conduits with #2 AWG bare bopper wire, connected to the ground bar.
11. The system ground, #500 kcMIL shall be routed along the 15 kV conduit run or conduit as shown, anchored at each location of the conduit rack.
12. The installation of the metallic pipe sleeve shall be aligned straight and parallel to structure. The pipe sleeve shall be used for a rigid steel conduit to pass through, and shall be install by others.
13. Coil 5000 long of ground conductor. For connection by others.

NOTES:

1. References:
   - TOS equipment is shown for conduit routing only. For typical details of TOS controller and devices, see sheets starting at E-204.
   - For overall grounding plan, see sheet E-74.
   - For conduit and cable tray schedules, see sheets starting at E-224
2. ~~(X) Dimensions to be provided by structural.~~
3. For overall plan of this area, see sheet E-52.
4. Refer to sheets E-65 and E-66 for conduit support location. Refer to to sheets E-67 and E-68 for conduit details.

DETAILS
ROADWAY AND GIRDER LEVEL EASTBOUND GIRDER CONDUIT INSTALLATION
SCALE: 1:60

E-62

MARK	DATE	DESCRIPTIONS	REV	CK	CCO No.
1	5/29/09	Revised location of conduits. Deleted ground conductor and ground bar, sheet notes 3 and 4; and notes 2. Added sheet notes 8, 9, 10, 11, 12, 13 and notes 4.	EJL	FW	113

REVISIONS

CONTRACT CHANGE ORDER NO. 118
SHEET 11 OF 11 6/22/09

DETAIL 3
HINGE FE

STATE OF CALIFORNIA - DEPARTMENT OF TRANSPORTATION
Caltrans

DESIGN OVERSIGHT: BEHZAD GOLEMOHAMMADI

CALCULATED/DESIGNED BY	FK	DATE 2/06	REVISED BY
CHECKED BY	AB	2/06	DATE REVISED

FOR REDUCED PLANS ORIGINAL SCALE IS IN MILLIMETERS 0 20 40 60 80

DGN FILE =>T:\13103\MS\pse\OID-Contract 1\CCO\Electrical\CCO-113 EB Conduit Rack\401201ua062r1.dgn
USERNAME =>ricafrente
CU 04251 EA 0120L1

LAST REVISION 00-00-00 DATE PLOTTED => 5/29/2009 TIME PLOTTED => 3:01:23 PM

STATE OF CALIFORNIA - DEPARTMENT OF TRANSPORTATION

CONTRACT CHANGE ORDER MEMORANDUM

DATE: 6/18/2009 Page 1 of 1

TO: AMER BATA / BEN GHAFGHAZI	FILE: E.A. 04 - 0120L4
FROM: BEN GHAFGHAZI	CO-RTE-PM ALA-80-1.6/2.7
	FED. NO. NO FED AID
CCO#: 118 SUPPLEMENT#: 0 Category Code: CBPC	CONTINGENCY BALANCE (incl. this change) $6,199,948.20
COST: $181,994.20 INCREASE ☑ DECREASE ☐	HEADQUARTERS APPROVAL REQUIRED? ☐ YES ☑ NO
SUPPLEMENTAL FUNDS PROVIDED: $0.00	IS THIS REQUEST IN ACCORDANCE WITH ENVIRONMENTAL DOCUMENTS? ☑ YES ☐ NO
CCO DESCRIPTION: Grounding and bushings EB & WB.	**PROJECT DESCRIPTION:** Construct bridge, roadway, building and electrical system.

Original Contract Time:	Time Adj. This Change:	Previously Approved CCO Time Adjustments:	Percentage Time Adjusted: (including this change)	Total # of Unreconciled Deferred Time CCO(s): (including this change)
810 Day(s)	0 Day(s)	184 Day(s)	23 %	10

THIS CHANGE ORDER PROVIDES FOR:

Installation of bushings and bare copper grounding conductors in Bridge No. 34-0006 L/R as shown on sheets 2 of 11 through 11 of 11 of this CCO.

This change is necessary because the grounding details were not included in the contract plans. Grounding is required by National Electric Code and Caltrans Standard Specifications, and therefore is being added on this CCO.

This work will be paid as Extra Work at Agreed Lump Sum of $181,994.20, which can be financed from the contingency fund. This sum constitutes full compensation, including markups, for this change. A detailed cost analysis is on file in the Resident Engineer's office.

This change has been discussed and concurred with Jaime Gutierrez of Project Development (memo attached) and Parviz Boozarpour of Electrical Design. Maintenance concurrence is not required since this change is due to code requirements and does not change any function of the electrical system.

No adjustment of contract time is warranted since this change does not affect the controlling operation.

CONCURRED BY:			
Construction Engineer:	Ben Ghafghazi	Date	7/20/09
Bridge Engineer:		Date	
Project Engineer:	Jaime Gutierrez	Date	7/1/09
Project Manager:		Date	
FHWA Rep.:		Date	
Environmental:		Date	
Other (specify):	Parviz Boozarpour, Elec. Design	Date	7/1/09
Other (specify):		Date	
District Prior Approval By:		Date	
HQ (Issue Approve) By:		Date	
Resident Engineer's Signature:		Date	7/20/09

ESTIMATE OF COST

	THIS REQUEST	TOTAL TO DATE
ITEMS	$0.00	$0.00
FORCE ACCOUNT	$0.00	$0.00
AGREED PRICE	$181,994.20	$181,994.20
ADJUSTMENT	$0.00	$0.00
TOTAL	$181,994.20	$181,994.20

FEDERAL PARTICIPATION

☐ PARTICIPATING ☐ PARTICIPATING IN PART ☑ NONE

☑ NON-PARTICIPATING (MAINTENANCE) ☐ NON-PARTICIPATING

FEDERAL SEGREGATION (if more than one Funding Source or P.I.P. type)

☑ CCO FUNDED PER CONTRACT ☐ CCO FUNDED AS FOLLOWS

FEDERAL FUNDING SOURCE	PERCENT

ADA Notice: For individuals with sensory disabilities, this document is available in alternate formats. For information call: (916) 654-6410 or TDD (916) 654-3880 or write Records and Forms Management, 1120 N Street, MS-89, Sacramento, CA 95814.

CONTRACT CHANGE ORDER

Change Requested by: Engineer

CCO 119	Suppl. No. 0	Contract No. 04 - 0120L4	Road ALA-80-1.6/2.7	FED. AID LOC.: NO FED AID

To: **M C M CONSTRUCTION INC**

You are directed to make the following changes from the plans and specifications or do the following described work not included in the plans and specifications for this contract. ***NOTE: This change order is not effective until approved by the Engineer.***

Description of work to be done, estimate of quantities and prices to be paid. (Segregate between additional work at contract price, agreed price and force account.) Unless otherwise stated, rates for rental of equipment cover only such time as equipment is actually used and no allowance will be made for idle time. This last percentage shown is the net accumulated increase or decrease from the original quantity in the Engineer's Estimate.

Revise light pole foundations for Bridge No. 34-0006L/R.

Extra Work at Force Account:

Install light pole foundation for pole No. 1607-7 at Sta. W 86+39.75 Rt. in lieu of Sta. W 86+43.00 Rt. as shown on the original plans. Details for installation are shown on sheets 2 of 3 and 3 of 3 of this CCO. Revise reinforcing steel details for light pole foundations at piers E17R, E19R, E17L, E19L, E20L, E21L, and E22L per sheet 3 of 3 of this CCO. All work shall be in accordance with Sections 10-1.53, "Concrete Structures," and 10-1.67, "Reinforcement," of the Special Provisions.

Estimated cost of Extra Work at Force Account $20,000.00

Estimated Cost: Increase ☑ **Decrease** ☐ **$20,000.00**

By reason of this order the time of completion will be adjusted as follows: 0 days

Signature	**Resident Engineer** BEN GHAFGHAZI	**Date** 7/15/09
Signature	**Construction Engineer** Ben Ghafghazi	**Date** 7/15/09
Signature	**Construction Engineer** Ben Ghafghazi	**Date** 9/23/09

We the undersigned contractor, have given careful consideration to the change proposed and agree, if this proposal is approved, that we will provide all equipment, furnish the materials, except as may otherwise be noted above, and perform all services necessary for the work above specified, and will accept as full payment therefor the prices shown above.

NOTE: If you, the contractor, do not sign acceptance of this order, your attention is directed to the requirements of the specifications as to proceeding with the ordered work and filing a written protest within the time therein specified.

Signature	**(Print name and title)** EDMUNDO A. PUCHI, TREASURER	**Date** 9/16/09

MARK	DATE	DESCRIPTIONS	BY	CH'D	CCO#
1	6/29/09	ADDED NOTE FOR LIGHT FOUNDATION	VT	TD	

REVISIONS

REGISTERED PROFESSIONAL ENGINEER VINH DIEU TRINH No. 50685 Exp. 9-30-2009 CIVIL STATE OF CALIFORNIA

STAMP IS VALID FOR REVISION 1 ONLY

CONTRACT CHANGE ORDER NO. 119
SHEET 2 OF 3 7/14/09

Caltrans Metric

DIST.	COUNTY	ROUTE	KILOMETER POST TOTAL PROJECT	SHEET NO.	TOTAL SHEETS
04	Ala	80	1.6/2.7	300R1	643

REGISTERED ENGINEER - CIVIL
1-29-07
PLANS APPROVAL DATE
REGISTERED PROFESSIONAL ENGINEER MOHAN S. CHAR No. C057894 Exp. 6/30/08 CIVIL STATE OF CALIFORNIA

The State of California or its officers or agents shall not be responsible for the accuracy or completeness of electronic copies of this plan sheet.

T.Y. LIN / MOFFATT & NICHOL
TWO HARRISON STREET, SUITE 500
SAN FRANCISCO, CA 94105

LIM & NASCIMENTO ENGINEERING CORPORATION
12 MAUCHLY, BLDG L
IRVINE, CA 92618

To get to the Caltrans web site, go to: http://www.dot.ca.gov

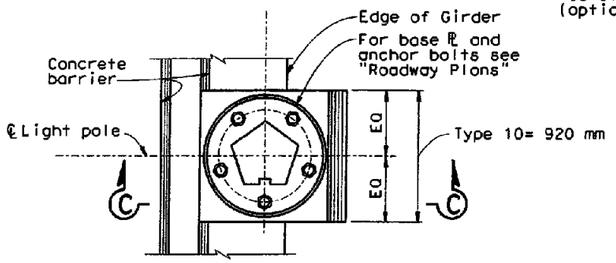

PLAN

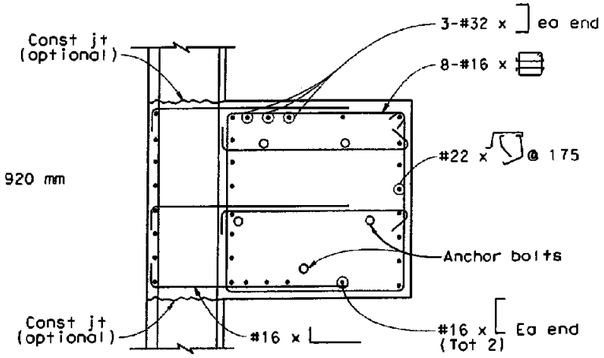

SECTION B-B

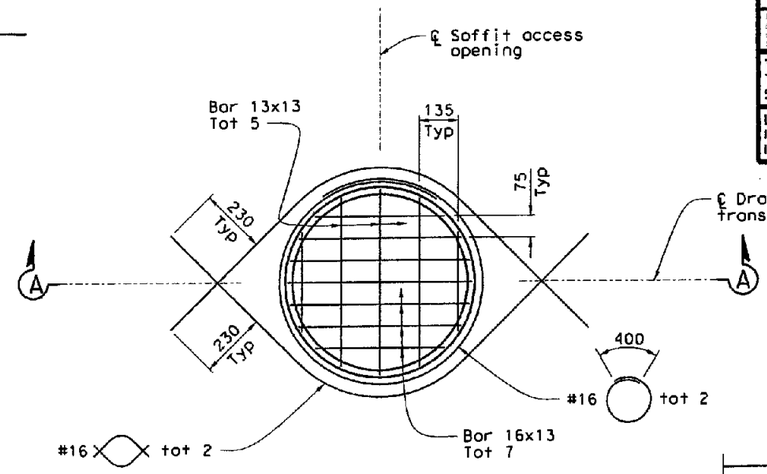

GRATED SOFFIT ACCESS OPENING
1:10

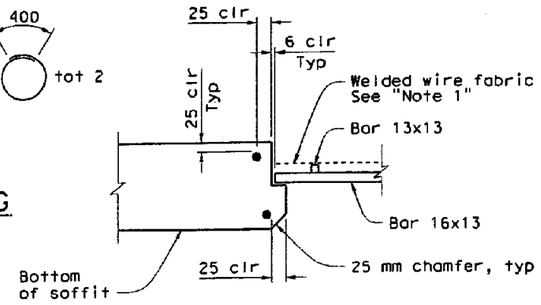

DETAIL 1
No Scale

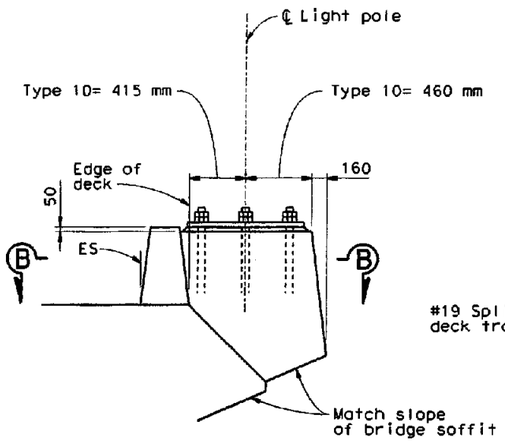

ELEVATION

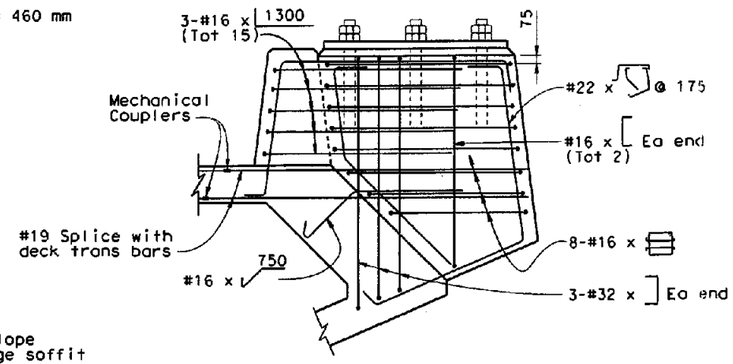

SECTION C-C

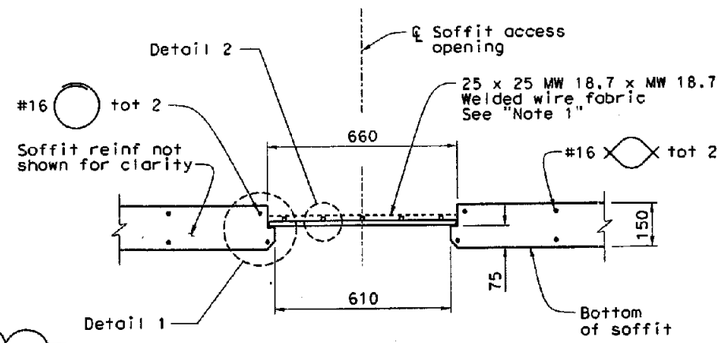

SECTION A-A
1:10

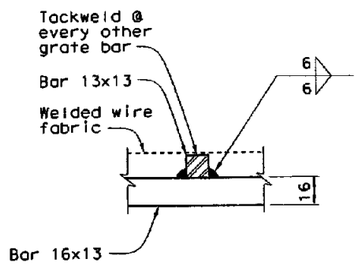

DETAIL 2
No Scale

ROADWAY LIGHT POLE FOUNDATIONS

No Scale

Notes: 1. For further details, see "Roadway Plans".

2. Adjust reinforcing to clear anchor bolts, prestressing ducts and anchorage reinforcing.

3. Luminaires furnished and installed in future contract.

1 * For foundations at Sta 86+39.750 and pier caps, see "Miscellaneous Details No. 1A" sheet

Notes:

1. Tack weld wire fabric to every other grate bar. Welded wire fabric shall contain opening 25 mm square or less.

2. Galvanize grated frame after fabrication.

ALL DIMENSIONS ARE IN MILLIMETERS UNLESS OTHERWISE SHOWN

SAN FRANCISCO OAKLAND BAY BRIDGE
EAST SPAN SEISMIC SAFETY PROJECT

OAKLAND APPROACH STRUCTURES - PHASE 1

MISCELLANEOUS DETAILS NO. 1

DESIGN OVERSIGHT: SAM AKKAD, FRANCISCO CARPIO, BERNARD CHAN, HASAN ELNATUR
SIGN OFF DATE 7/9/09

	BY	CHECKED
DESIGN	M. CHAR	T. DUDLEY
DETAILS	N. MORCILLO/M. ANDRASEK	M. CHAR
QUANTITIES	N. MORCILLO/Y. KIM	V.SIVAKOLUNDU/T.DUDLEY

PREPARED FOR THE STATE OF CALIFORNIA DEPARTMENT OF TRANSPORTATION

MOHAN S. CHAR, PROJECT ENGINEER

BRIDGE NO. 34-0006L/R
KILOMETER POST 1.6

CU 04
EA 0120L1

DISREGARD PRINTS BEARING EARLIER REVISION DATES

REVISION DATES (PRELIMINARY STAGE ONLY) 5/18/03 0/18/03 8/18/04 10/22/04 2/18/05 6/24/05 11/14/05 1/31/06 4/17/06 7/28/06

SHEET 187 OF 224

ORIGINAL SCALE IN MILLIMETERS FOR REDUCED PLANS 0 10 20 30 40 50 60 70 80 90 100

Rev. Date: 9-18-98

DATE: 27-Sep-02 10:43

DIST	COUNTY	ROUTE	KILOMETER POST TOTAL PROJECT	SHEET NO.	TOTAL SHEETS
04	Ala	80	1.6/2.7	300S1	643

REGISTERED ENGINEER - CIVIL

06-29-09
PLANS APPROVAL DATE

REGISTERED PROFESSIONAL ENGINEER VINH DIEU TRINH No. 50685 Exp. 9-30-2009 CIVIL STATE OF CALIFORNIA

The State of California or its officers or agents shall not be responsible for the accuracy or completeness of electronic copies of this plan sheet.

T.Y. LIN / MOFFATT & NICHOL
TWO HARRISON STREET, SUITE 500
SAN FRANCISCO, CA 94105

WKE, INC.
400 NORTH TUSTIN AVENUE, SUITE 285
SANTA ANA, CA 92705

To get to the Caltrans web site, go to: http://www.dot.ca.gov

SUPPLEMENTAL SHEET
CONTRACT CHANGE ORDER NO. 119
SHEET 3 OF 3 7/14/09

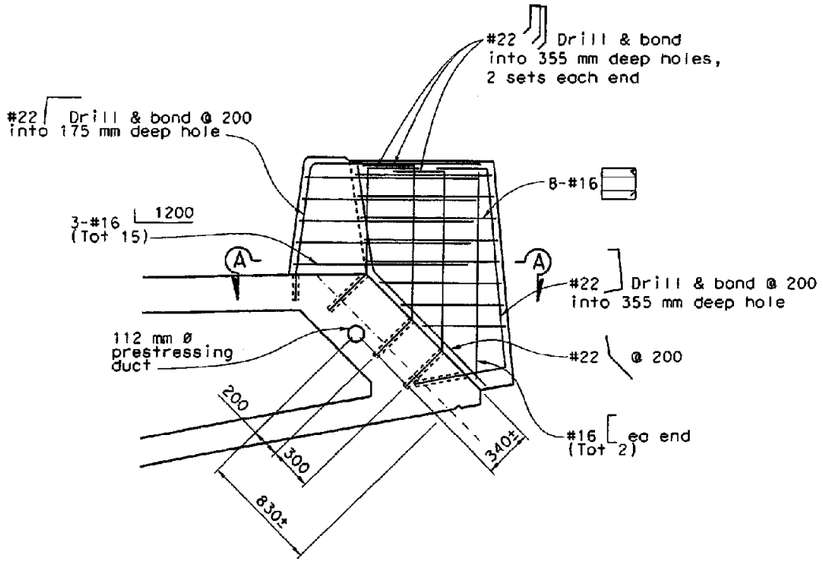

LIGHT POLE FOUNDATION
AT STA "W" 86+39.750
1:20

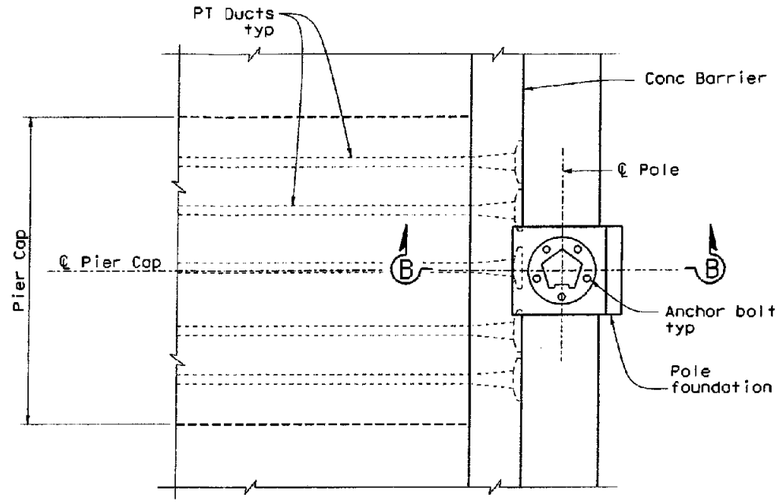

LIGHT POLE FOUNDATION AT PIER CAPS
E17L, E19L, E20L, E21L, E22L, E17R & E19R
1:30

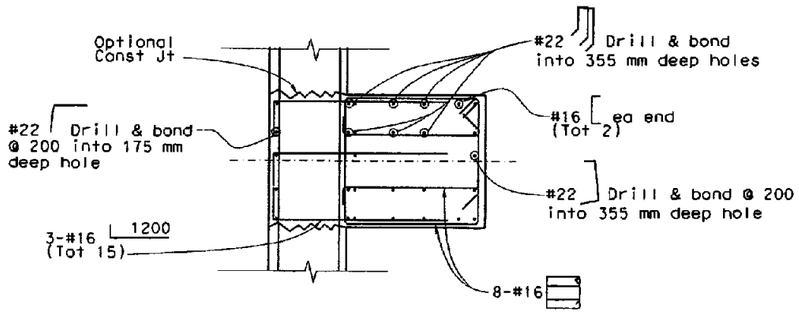

SECTION A-A
1:20

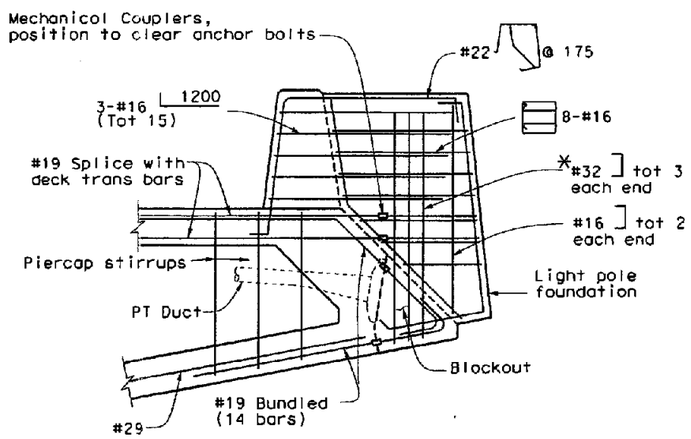

SECTION B-B
1:20

*Adjust location in field to avoid conflict with PT Anchorage as approved by the Engineer.

Notes:

1. The Contractor shall locate the exact location of the prestressing duct prior to drilling. Drilling shall not damage the prestressing duct.
2. For information not shown, see "Miscellaneous Details No. 1" sheet.

ALL DIMENSIONS ARE IN MILLIMETERS UNLESS OTHERWISE SHOWN

SAN FRANCISCO OAKLAND BAY BRIDGE
EAST SPAN SEISMIC SAFETY PROJECT

OAKLAND APPROACH STRUCTURES-PHASE 1

MISCELLANEOUS DETAILS NO. 1A

DESIGN OVERSIGHT Hasan El-Natur
HASAN EL-NATUR
SIGN OFF DATE 7/9/09

	BY	CHECKED
DESIGN	V. Trinh	T. Dudley
DETAILS	V. Trinh	T. Dudley
QUANTITIES		

PREPARED FOR THE STATE OF CALIFORNIA DEPARTMENT OF TRANSPORTATION

Vinh Trinh
PROJECT ENGINEER

BRIDGE NO. 34-0006L/R
KILOMETER POST 1.6

CU 04
EA 0120L1

DISREGARD PRINTS BEARING EARLIER REVISION DATES 6/23/03

REVISION DATES (PRELIMINARY STAGE ONLY)

SHEET 187S1 OF 224

Rev. Date: 5-18-98

ORIGINAL SCALE IN MILLIMETERS FOR REDUCED PLANS 0 10 20 30 40 50 60 70 80 90 100

STATE OF CALIFORNIA - DEPARTMENT OF TRANSPORTATION

CONTRACT CHANGE ORDER MEMORANDUM

DATE: 6/29/2009 Page 1 of 1

TO: AMER BATA / BEN GHAFGHAZI

FROM: BEN GHAFGHAZI

FILE: E.A. 04 - 0120L4
CO-RTE-PM ALA-80-1.6/2.7
FED. NO. NO FED AID

CCO#: 119 SUPPLEMENT#: 0 Category Code: CHPT

CONTINGENCY BALANCE (incl. this change) $6,179,948.20

COST: $20,000.00 INCREASE ☑ DECREASE ☐

HEADQUARTERS APPROVAL REQUIRED? ☐ YES ☑ NO

SUPPLEMENTAL FUNDS PROVIDED: $0.00

IS THIS REQUEST IN ACCORDANCE WITH ENVIRONMENTAL DOCUMENTS? ☑ YES ☐ NO

CCO DESCRIPTION:
Relocate light pole foundation.

PROJECT DESCRIPTION:
Construct bridge, roadway, building and electrical system.

Original Contract Time:	Time Adj. This Change:	Previously Approved CCO Time Adjustments:	Percentage Time Adjusted: (including this change)	Total # of Unreconciled Deferred Time CCO(s): (including this change)
810 Day(s)	0 Day(s)	184 Day(s)	23 %	10

THIS CHANGE ORDER PROVIDES FOR:

Revising light pole foundations for Bridge No. 34-0006L/R. Light pole foundation for pole No. 1607-7 at will be installed at Sta. W 86+39.75 Rt. in lieu of Sta. W 86+43.00 Rt. as shown on the original plans. Details for installation are shown on sheets 2 of 3 and 3 of 3 of the CCO. Reinforcing steel details for light pole foundations at piers E17R, E19R, E17L, E19L, E20L, E21L, and E22L will be revised per sheet 3 of 3 of the CCO.

This change is necessary to resolve conflicts between the light pole foundations and bridge structure. The foundation for pole No. 1607-7 is within the limits of the seismic joint at Abutment 23L. There is no detail for installing the foundation at this location. To avoid any issues with the function of the seismic joint the foundation will be moved outside of the seismic joint limits. The foundations at piers E17R, E19R, E17L, E19L, E20L, E21L, and E22L interfere with post tensioning ducts at the bent caps. The foundations will be modified to avoid this interference.

This work will be paid as Extra Work at Force Account for $20,000.00, which can be financed from the contingency fund.

This change has been discussed and concurred with Hasan El-Natur of Structures Design, Jal Birdy of Moffat Nichol, and Lina Ellis of Structures Maintenance.

No adjustment of contract time is warranted since this change does not affect the controlling operation.

CONCURRED BY:

Construction Engineer:	Ben Ghafghazi	Date	7/15/09
Bridge Engineer:	Mehran Ardakanian	Date	7/15/09
Project Engineer:	Hasan El-Natur, Structures Design	Date	6/26/09
Project Manager:		Date	
FHWA Rep.:		Date	
Environmental:		Date	
Other (specify):	Jal Birdy, Moffat Nichol	Date	6/26/09
Other (specify):	Lina Ellis, Structures Maint.	Date	7/1/09
District Prior Approval By:		Date	
HQ (Issue Approve) By:		Date	
Resident Engineer's Signature:		Date	7/15/09

ESTIMATE OF COST

	THIS REQUEST	TOTAL TO DATE
ITEMS	$0.00	$0.00
FORCE ACCOUNT	$20,000.00	$20,000.00
AGREED PRICE	$0.00	$0.00
ADJUSTMENT	$0.00	$0.00
TOTAL	$20,000.00	$20,000.00

FEDERAL PARTICIPATION

☐ PARTICIPATING ☐ PARTICIPATING IN PART ☑ NONE
☐ NON-PARTICIPATING (MAINTENANCE) ☐ NON-PARTICIPATING

FEDERAL SEGREGATION (if more than one Funding Source or P.I.P. type)
☑ CCO FUNDED PER CONTRACT ☐ CCO FUNDED AS FOLLOWS

FEDERAL FUNDING SOURCE	PERCENT

ADA Notice: For individuals with sensory disabilities, this document is available in alternate formats. For information call: (916) 654-6410 or TDD (916) 654-3880 or write Records and Forms Management, 1120 N Street, MS-89, Sacramento, CA 95814.

STATE OF CALIFORNIA - DEPARTMENT OF TRANSPORTATION

CONTRACT CHANGE ORDER

Change Requested by: Engineer

CCO 120	Suppl. No. 0	Contract No. 04 - 0120L4	Road ALA-80-1.6/2.7	FED. AID LOC.: NO FED AID

To: **M C M CONSTRUCTION INC**

You are directed to make the following changes from the plans and specifications or do the following described work not included in the plans and specifications for this contract. ***NOTE: This change order is not effective until approved by the Engineer.***

Description of work to be done, estimate of quantities and prices to be paid. (Segregate between additional work at contract price, agreed price and force account.) Unless otherwise stated, rates for rental of equipment cover only such time as equipment is actually used and no allowance will be made for idle time. This last percentage shown is the net accumulated increase or decrease from the original quantity in the Engineer's Estimate.

Extra Work at Force Account:

Provide a longitudinal surface texture for Bridge No. 34-0006R Frame 1 deck concrete. A procedure for applying longitudinal surface texture shall be submitted to the engineer for review and approval prior to work. This work is in addition to the requirements of Section 51-1.17, "Finishing Bridge Decks" of the Standard Specifications.

Estimated cost of Extra Work at Force Account $30,000.00

Estimated Cost: **Increase** ☑ **Decrease** ☐ **$30,000.00**

By reason of this order the time of completion will be adjusted as follows: 0 days

Signature	**Resident Engineer** BEN GHAFGHAZI	**Date** 7/23/09
Signature	**Construction Engineer** Ben Ghafghazi	**Date** 7/23/09
Signature N.A	**Construction Engineer** Ben Ghafghazi	**Date** 8/3/09

We the undersigned contractor, have given careful consideration to the change proposed and agree, if this proposal is approved, that we will provide all equipment, furnish the materials, except as may otherwise be noted above, and perform all services necessary for the work above specified, and will accept as full payment therefor the prices shown above.

NOTE: If you, the contractor, do not sign acceptance of this order, your attention is directed to the requirements of the specifications as to proceeding with the ordered work and filing a written protest within the time therein specified.

Signature	**(Print name and title)** Edmundo A. Puchi Treasurer	**Date** 7-30-09

STATE OF CALIFORNIA - DEPARTMENT OF TRANSPORTATION

CONTRACT CHANGE ORDER MEMORANDUM

DATE: 7/22/2009 Page 1 of 1

TO: AMER BATA / BEN GHAFGHAZI

FROM: BEN GHAFGHAZI

FILE: E.A. 04 - 0120L4
CO-RTE-PM ALA-80-1.6/2.7
FED. NO. NO FED AID

CCO#: 120 SUPPLEMENT#: 0 Category Code: ~~CHSB~~ CHPA

CONTINGENCY BALANCE (incl. this change) $5,901,256.20

COST: $30,000.00 INCREASE ☑ DECREASE ☐

HEADQUARTERS APPROVAL REQUIRED? ☐ YES ☑ NO

SUPPLEMENTAL FUNDS PROVIDED: $0.00

IS THIS REQUEST IN ACCORDANCE WITH ENVIRONMENTAL DOCUMENTS? ☑ YES ☐ NO

CCO DESCRIPTION:
Provide longitudinal bridge texture.

PROJECT DESCRIPTION:
Construct bridge, roadway, building and electrical system.

Original Contract Time:	Time Adj. This Change:	Previously Approved CCO Time Adjustments:	Percentage Time Adjusted: (including this change)	Total # of Unreconciled Deferred Time CCO(s): (including this change)
810 Day(s)	0 Day(s)	184 Day(s)	23 %	10

THIS CHANGE ORDER PROVIDES FOR:

Placing longitudinal surface texture for deck concrete of Bridge No. 34-0006R, Frame 1.

This change has been requested by Brian Maroney, Deputy Toll Bridge Program Manager (memo attached). This change is necessary to reduce traffic noise caused by transversely placed deck texture. This work is in addition to the requirements of Section 51-1.17, "Finishing Bridge Decks" of the Standard Specifications. The procedure for applying the longitudinal surface texture will be submitted to the engineer for review and approval prior to the work.

This work will be paid as Extra Work at Force Account for $30,000.00, which can be financed from the contingency fund.

This change has been discussed and concurred Steve Margaris, Specifications Manager, SFOBB; John Drury, Office of Structures Construction; Bruce Rymer, Environmental Analysis. Maintenance concurrence is not necessary since this change does not affect any Maintenance operations.

No adjustment of contract time is warranted since this change does not affect the controlling operation.

CONCURRED BY:

Construction Engineer:	Ben Ghafghazi	Date	7/23/09
Bridge Engineer:	Mehran Ardakanian	Date	7/23/09
Project Engineer:		Date	
Project Manager:		Date	
FHWA Rep.:		Date	
Environmental:	Bruce Rymer, Env. Analysis	Date	6/30/09
Other (specify):	Steve Margaris, Spec. Manager	Date	6/30/09
Other (specify):	John Drury, OSC	Date	6/30/09
District Prior Approval By:		Date	
HQ (Issue Approve) By:		Date	
Resident Engineer's Signature:		Date	7/23/09

ESTIMATE OF COST

	THIS REQUEST	TOTAL TO DATE
ITEMS	$0.00	$0.00
FORCE ACCOUNT	$30,000.00	$30,000.00
AGREED PRICE	$0.00	$0.00
ADJUSTMENT	$0.00	$0.00
TOTAL	$30,000.00	$30,000.00

FEDERAL PARTICIPATION

☐ PARTICIPATING ☐ PARTICIPATING IN PART ☑ NONE
☐ NON-PARTICIPATING (MAINTENANCE) ☐ NON-PARTICIPATING

FEDERAL SEGREGATION (if more than one Funding Source or P.I.P. type)
☑ CCO FUNDED PER CONTRACT ☐ CCO FUNDED AS FOLLOWS

FEDERAL FUNDING SOURCE PERCENT

ADA Notice: For individuals with sensory disabilities, this document is available in alternate formats. For information call: (916) 654-6410 or TDD (916) 654-3880 or write Records and Forms Management, 1120 N Street, MS-89, Sacramento, CA 95814.

STATE OF CALIFORNIA - DEPARTMENT OF TRANSPORTATION

CONTRACT CHANGE ORDER MEMORANDUM

DATE: 4/7/2010 Page 1 of 1

TO: AMER BATA / BEN GHAFGHAZI

FROM: BEN GHAFGHAZI

FILE: **E.A.** 04 - 0120L4
CO-RTE-PM ALA-80-1.6/2.7
FED. NO. NO FED AID

CCO#: **120**	SUPPLEMENT#: **1**	Category Code: **CHSB**	CONTINGENCY BALANCE (incl. this change) **$1,806,488.40**

COST: **$123,985.18** INCREASE ☑ DECREASE ☐

HEADQUARTERS APPROVAL REQUIRED? ☐ YES ☑ NO

SUPPLEMENTAL FUNDS PROVIDED: **$0.00**

IS THIS REQUEST IN ACCORDANCE WITH ENVIRONMENTAL DOCUMENTS? ☑ YES ☐ NO

CCO DESCRIPTION:
Grind and Groove EB Deck

PROJECT DESCRIPTION:
Construct bridge, roadway, building and electrical system.

Original Contract Time:	Time Adj. This Change:	Previously Approved CCO Time Adjustments:	Percentage Time Adjusted: (including this change)	Total # of Unreconciled Deferred Time CCO(s): (including this change)
810 Day(s)	**0** Day(s)	**184** Day(s)	**23** %	**0**

THIS CHANGE ORDER PROVIDES FOR:

Grooving the deck of the Eastbound structure longitudinally, parallel to the centerline and within the limits of the travelled way. The work of this change order shall be done in accordance with Section 42-1 "GROOVING" of the Standard Specifications.

CCO No. 120, Supplement 0 was issued at Extra Work at Force Account for $30,000, for which the work has not yet begun. However, since the time this CCO was first issued, the scope of work has been expanded to include grooving. Meanwhile, a more accurate dollar amount of this CCO has been determined, by an agreement between the Engineer and the contractor. Therefore, it is hereby proposed to compensate the contractor as follows:

Payment for the Extra Work will be a Lump Sum of $123,985.13, which can be financed from the contingency fund. A detailed cost analysis has been submitted by the contractor, and was verified as reasonable by the Engineer. The cost analysis is in file at the Resident Engineer's office.

This change has been discussed and concurred with Steve Margaris, Specifications Manager, SFOBB; John Drury, Office of Structures Construction; Bruce Rymer, Environmental Analysis. Maintenance concurrence is not necessary since this change does not affect any Maintenance operations.

No adjustment of contract time is warranted as this change does not affect the controlling operation.

CONCURRED BY:

Construction Engineer:	Ben Ghafghazi	Date 5/17/2010
Bridge Engineer:		Date
Project Engineer:		Date
Project Manager:		Date
FHWA Rep.:		Date
Environmental:	Bruce Rymer, Env. Analysis	Date 6/30/09
Other (specify):	Steve Margaris, Spec. Manager	Date 6/30/09
Other (specify):	John Drury, OSC	Date 6/30/09
District Prior Approval By:		Date
HQ (Issue Approve) By:		Date
Resident Engineer's Signature:		Date 5/17/2010

ESTIMATE OF COST

	THIS REQUEST	TOTAL TO DATE
ITEMS	$0.00	$0.00
FORCE ACCOUNT	$0.00	$30,000.00
AGREED PRICE	$123,985.18	$123,985.18
ADJUSTMENT	$0.00	$0.00
TOTAL	$123,985.18	$153,985.18

FEDERAL PARTICIPATION

☐ PARTICIPATING ☐ PARTICIPATING IN PART ☑ NONE
☐ NON-PARTICIPATING (MAINTENANCE) ☐ NON-PARTICIPATING

FEDERAL SEGREGATION (if more than one Funding Source or P.I.P. type)
☑ CCO FUNDED PER CONTRACT ☐ CCO FUNDED AS FOLLOWS

FEDERAL FUNDING SOURCE	PERCENT

ADA Notice: For individuals with sensory disabilities, this document is available in alternate formats. For information call: (916) 654-6410 or TDD (916) 654-3880 or write Records and Forms Management, 1120 N Street, MS-89, Sacramento, CA 95814.

STATE OF CALIFORNIA - DEPARTMENT OF TRANSPORTATION

CONTRACT CHANGE ORDER

Change Requested by: Engineer

CCO: 120	Suppl. No. 1	Contract No. 04 - 0120L4	Road ALA-80-1.6/2.7	FED. AID LOC.: NO FED AID

To: **M C M CONSTRUCTION INC**

You are directed to make the following changes from the plans and specifications or do the following described work not included in the plans and specifications for this contract. ***NOTE: This change order is not effective until approved by the Engineer.***

Description of work to be done, estimate of quantities and prices to be paid. (Segregate between additional work at contract price, agreed price and force account.) Unless otherwise stated, rates for rental of equipment cover only such time as equipment is actually used and no allowance will be made for idle time. This last percentage shown is the net accumulated increase or decrease from the original quantity in the Engineer's Estimate.

Extra Work at Lump Sum:

In addition to the work of CCO No. 120, Supplement 0, provide labor, equipment and materials to longitudinally groove the Oakland Touchdown Eastbound (EB) deck. Groove the bridge deck longitudinally, parallel to the centerline and within the limits of the travelled way, and as directed by the Engineer in the field. The work of this change order shall be done in accordance with Section 42-1 "GROOVING" of the Standard Specifications.

Extra Work at Lump Sum $123,985.18

Estimated Cost: Increase ☑ **Decrease** ☐ **$123,985.18**

By reason of this order the time of completion will be adjusted as follows: 0 days

Signature	**Resident Engineer** Ben Ghafghazi	**Date** 5/17/2010
Signature	**Construction Engineer** Ben Ghafghazi	**Date** 5/17/2010
Signature	**Construction Manager** Amer Bata	**Date** 6/3/10

We the undersigned contractor, have given careful consideration to the change proposed and agree, if this proposal is approved, that we will provide all equipment, furnish the materials, except as may otherwise be noted above, and perform all services necessary for the work above specified, and will accept as full payment therefor the prices shown above.

NOTE: If you, the contractor, do not sign acceptance of this order, your attention is directed to the requirements of the specifications as to proceeding with the ordered work and filing a written protest within the time therein specified.

Signature	**(Print name and title)** EDMUNDO A. PUCHI, TREASURER	**Date** 6/1/10

CONTRACT CHANGE ORDER

Change Requested by: Engineer

CCO 121	Suppl. No. 0	Contract No. 04 - 0120L4	Road ALA-80-1.6/2.7	FED. AID LOC.: NO FED AID

To: **M C M CONSTRUCTION INC**

You are directed to make the following changes from the plans and specifications or do the following described work not included in the plans and specifications for this contract. ***NOTE: This change order is not effective until approved by the Engineer.***

Description of work to be done, estimate of quantities and prices to be paid. (Segregate between additional work at contract price, agreed price and force account.) Unless otherwise stated, rates for rental of equipment cover only such time as equipment is actually used and no allowance will be made for idle time. This last percentage shown is the net accumulated increase or decrease from the original quantity in the Engineer's Estimate.

Provide labor, equipment, and materials to modify bikepath lighting per revised plan sheets 420R2, 421R2, 426R1, 427R2, 429R3, and 450R2 of 643 as shown on sheets 2 of 7 though 7 of 7 of this CCO.

Adjustment of Compensation at Lump Sum:

Eliminate exposed conduit routing on bikepath dividers by locating the conduit stub out in the bikepath post. Relocate lighting fixtures and modify conduits to match location of bikepath dividers. All work shall be in accordance with Section 10-3, "Signals, Lighting and Electrical Systems," of the Special Provisions and Section 86, "Signals, Lighting and Electrical Systems," of the Standard Specification. For this work, the contractor will be paid the sum of $37,704.00. This sum constitutes full compensation, including markups, for this change.

Adjustment of Compensation at Agreed Lump Sum $37,704.00

Consideration of a time adjustment will be deferred until completion of the work specified herein. Determination of a commensurate time extension will be made in accordance with Section 10-1.14, "Progress Schedule (Critical Path Method)," of the Special Provisions and Section 8-1.07, "Liquidated Damages," of the Standard Specifications.

Estimated Cost: Increase ☑ **Decrease** ☐ **$37,704.00**

By reason of this order the time of completion will be adjusted as follows: Deferred

Submitted by		
Signature	**Resident Engineer** BEN GHAFGHAZI	**Date** 12/16/09
Approval Recommended by		
Signature	**Construction Engineer** Ben Ghafghazi	**Date** 12/16/09
Engineer Approval by		
Signature	**Construction Engineer** Ben Ghafghazi	**Date**

We the undersigned contractor, have given careful consideration to the change proposed and agree, if this proposal is approved, that we will provide all equipment, furnish the materials, except as may otherwise be noted above, and perform all services necessary for the work above specified, and will accept as full payment therefor the prices shown above.

NOTE: If you, the contractor, do not sign acceptance of this order, your attention is directed to the requirements of the specifications as to proceeding with the ordered work and filing a written protest within the time therein specified.

Contractor Acceptance by		
Signature	**(Print name and title)** Edmundo A. Ruchi - Treasurer	**Date** 1-14-2010

DIST	COUNTY	ROUTE	KILOMETER POST TOTAL PROJECT	SHEET No	TOTAL SHEETS
04	Ala	80	1.6/2.7	420 R2	643

REGISTERED ELECTRICAL ENGINEER 05/15/06 DATE

1-29-07
PLANS APPROVAL DATE

REGISTERED PROFESSIONAL ENGINEER JENS ERLINGSSON No. 8249 Exp. 9/30/08 ELECTRICAL STATE OF CALIFORNIA

PB POWER, Inc.
A Parsons Brinckerhoff Company
303 Second St., Suite 700N
San Francisco, CA 94107-1317

The State of California or its officers or agents shall not be responsible for the accuracy or completeness of electronic copies of this plan sheet.

Caltrans now has a web site! To get to the web site, go to http://www.dot.ca.gov

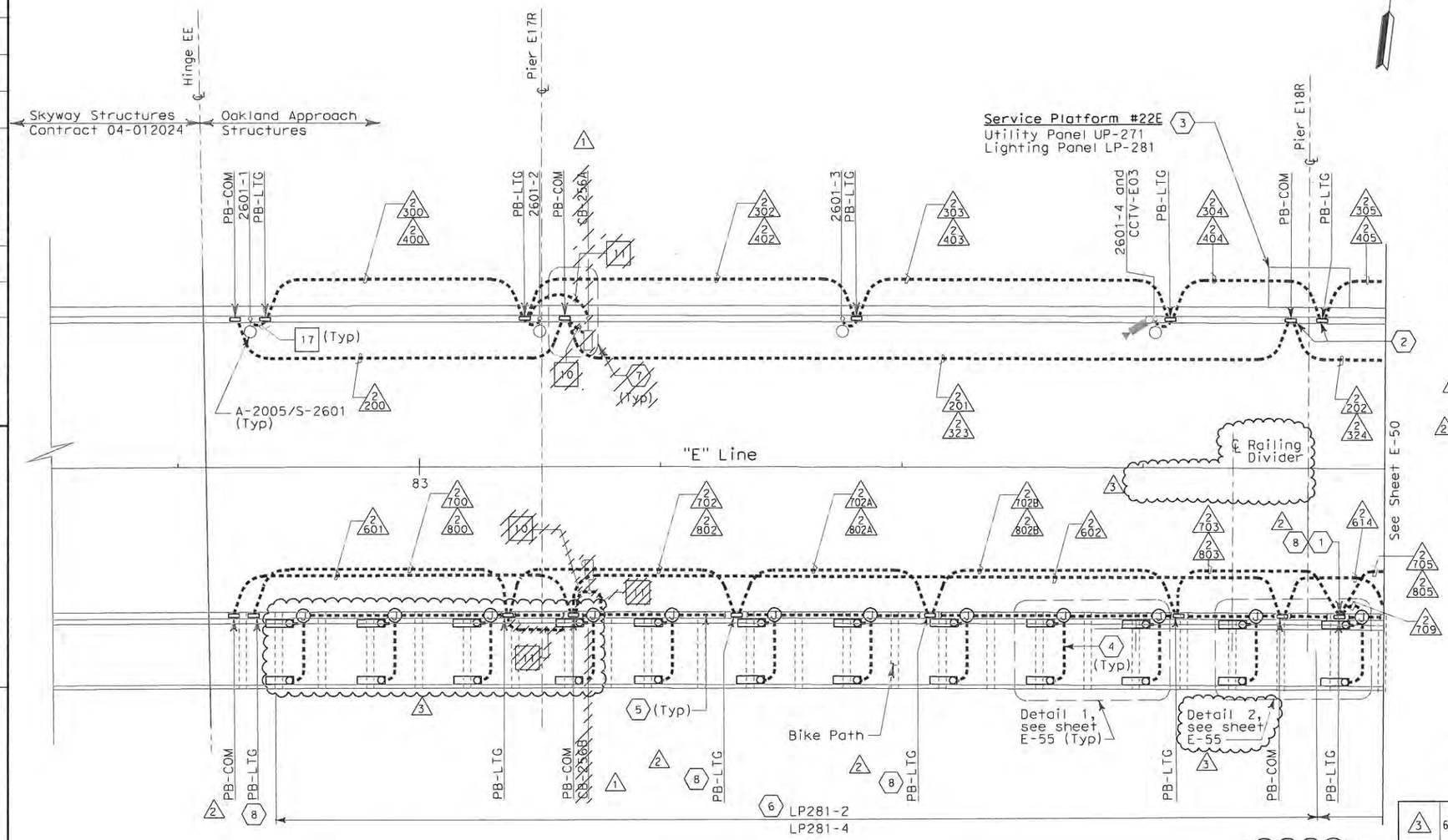

ROADWAY CONDUIT PLAN

SHEET NOTES:

1. Conduit down into Girder Level. See sheet E-51.
2. Conduit down into Girder Level. See sheet E-61.
3. For Service Platform details, see sheet E-53.
4. For locations of conduit inside the Bike Path, see sheets E-55 and E-58.
5. All conduits and fittings routed exposed between the Bike Path and the Roadway shall be PVC coated RGS.
6. Panel and circuit number on top, apply to lights located in the railing on the north side of the Bike Path. Panel and circuit number below, apply to lights located in therailing on the south side of the Bike Path.
7. ~~For Call Box conduit installation, see sheet E-73.~~
8. Down, conduit stub-out for future light pipe, see sheet E-62A.

NOTES:

1. References:
   - For typical details and locations of conduit connections to light poles, barrier outlet boxes, ~~call boxes~~, CMS, CCTV and MVDS, see sheets E-71 thru E-73.
   - TOS equipment is shown for conduit routing only. For typical details of TOS controller and devices, see sheets starting at E-204.
   - For types of pull boxes, splice boxes and enclosures, see sheet E-77.
   - ~~For call box schedule, see sheet E-171~~
   - For conduit and cable tray schedules, see sheets starting at E-224.
   - For LP281 panel schedule, refer to E-79.
   - For Roadway Level and Bike Path Fixture Schedule, see sheet E-76.
   - For Roadway Level, Bike Path Fixtures and Call Box Wiring Diagram, (By others).
2. For location of lighting dividers, see structural plan sheets.
3. Install conduits only.

MARK	DATE	DESCRIPTIONS	REV	CK	CCO NO.
3	6/12/09	Revised location of bike path lighting fixtures and Notes 2. Added fixtures and Detail 2.	RSB	EJL	Bike Path Lighting
2	8/29/08	Added conduit nos. 2702A, 2802A, PB-LTG and Sheet Notes 8. Re-routed conduit no. 2702 and 2802.	EJL	ECR	Light Pipe
1	8/29/08	Deleted CB-256A, CB-256B, Project Notes 10 and 11, Sheet Note 7 and Call Box Reference Note.	ECR	EJL	18S1

REVISIONS

REGISTERED PROFESSIONAL ENGINEER FADI WALIEDDINE No. 11465 Exp. 12/31/2009 ELECTRICAL STATE OF CALIFORNIA

CONTRACT CHANGE ORDER NO. 121
SHEET 2 OF 7

ROADWAY AND GIRDER LEVEL EASTBOUND
(LIGHTING AND ELECTRICAL SYSTEMS)

SCALE: 1:200

E-49

THIS PLAN IS ACCURATE FOR ELECTRICAL WORK ONLY.

STATE OF CALIFORNIA - DEPARTMENT OF TRANSPORTATION
Caltrans
DESIGN OVERSIGHT BEHZAD GOLEMOHAMMADI
CALCULATED/DESIGNED BY FK DATE 2/06
CHECKED BY AB 2/06
REVISED BY DATE REVISED

LAST REVISION 00-00-00 DATE PLOTTED => 6/10/2009 TIME PLOTTED => 4:50:34 PM

FOR REDUCED PLANS ORIGINAL SCALE IS IN MILLIMETERS 0 20 40 60 80

DGN FILE =>T:\13103\MS\pse\OTD-Contract 1\CCO\Electrical\CCO_Bike Path\401201cb049R2.dgn
USERNAME =>llorico

CU 04251 EA 0120L1

DIST	COUNTY	ROUTE	KILOMETER POST TOTAL PROJECT	SHEET NO	TOTAL SHEETS
04	Ala	80	1.6/2.7	421 R2	643

REGISTERED ELECTRICAL ENGINEER 05/15/06 DATE

1-29-07
PLANS APPROVAL DATE

REGISTERED PROFESSIONAL ENGINEER JENS ERLINGSSON No. 8249 Exp. 9/30/08 ELECTRICAL STATE OF CALIFORNIA

PB POWER, Inc.
A Parsons Brinckerhoff Company
303 Second St., Suite 700N
San Francisco, CA 94107-1317

The State of California or its officers or agents shall not be responsible for the accuracy or completeness of electronic copies of this plan sheet.

Caltrans now has a web site! To get to the web site, go to http://www.dot.ca.gov

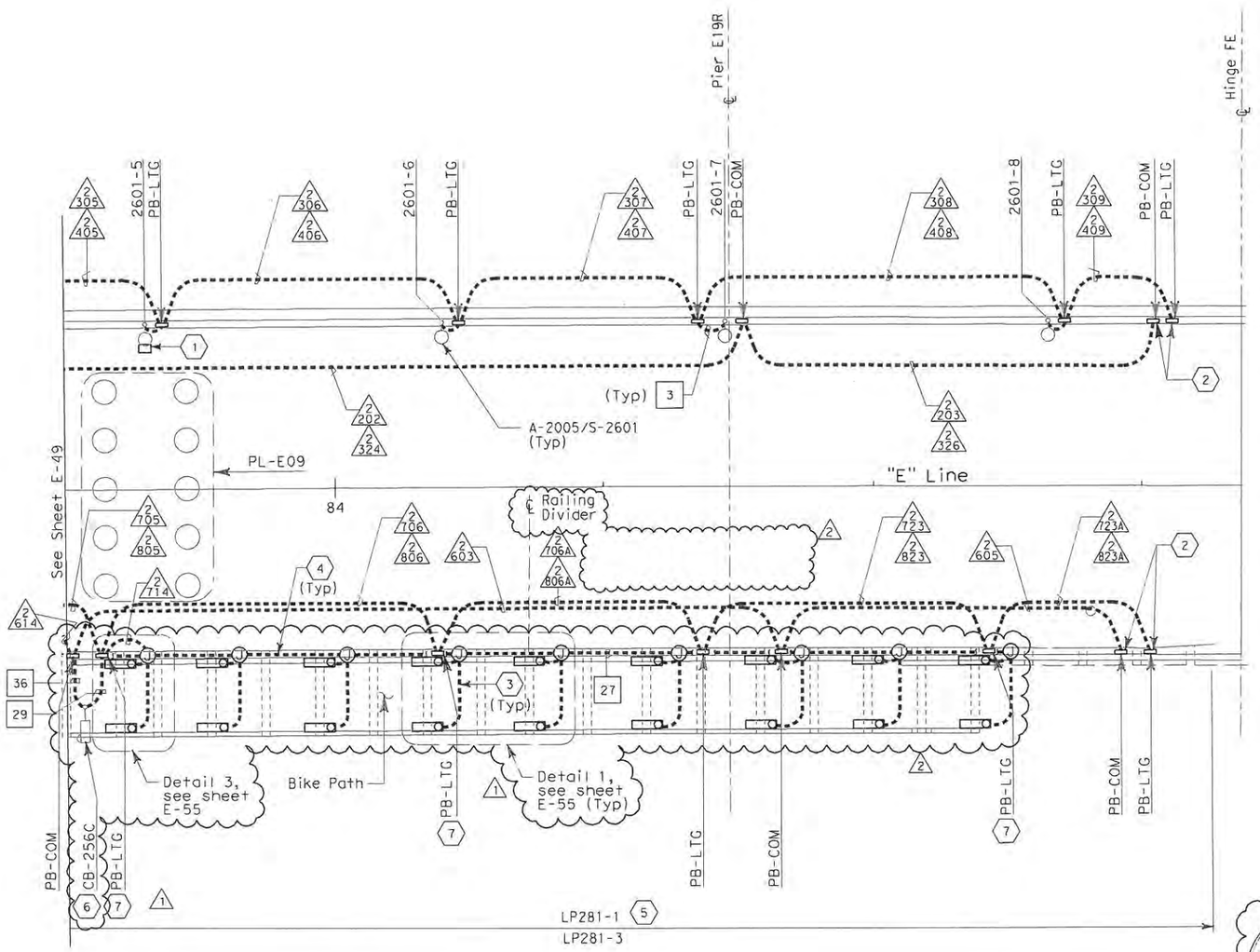

ROADWAY CONDUIT PLAN

SHEET NOTES:

1. Preformed Loop splice box PB-4D, see sheet E-61 and E-77.
2. Conduit down into Girder Level. See sheet E-52.
3. For locations of conduit inside the Bike Path, see sheets E-55 and E-58.
4. All conduits and fittings routed exposed between the Bike Path and the Roadway shall be PVC coated RGS.
5. Panel and circuit number on top, apply to lights located in the railing on the north side of the Bike Path. Panel and circuit number below, apply to lights located in the railing on the south side of the Bike Path.
6. For Call Box conduit installation, see sheet E-58.
7. Down, conduit stub out for future light pipe, see sheet E-62B.

NOTES:

1. References:
   - For typical details and locations of conduit connections to light poles, barrier outlet boxes, call boxes, CCTV and MVDS, see sheets E-71 thru E-73.
   - TOS equipment is shown for conduit routing only. For typical details of TOS controller and devices, see sheets starting at E-204.
   - For types of pull boxes, splice boxes and enclosures, see sheet E-77.
   - For conduit and cable tray schedules, see sheets starting at E-224.
   - For LP281 panel schedule, refer to E-79.
   - For Roadway Level Call Box and Bike Path Fixture Wiring Diagram, (By others).
   - For Roadway Level and Bike Path Call Box Schedules, see sheet E-76.
2. For location of lighting dividers, see structural plan sheets.
3. Install conduits only.

REGISTERED PROFESSIONAL ENGINEER FADI WALIEDDINE No. 11465 Exp. 12/31/2009 ELECTRICAL STATE OF CALIFORNIA

MARK	DATE	DESCRIPTIONS	BY	CK	CCO NO.
2	6/12/09	Revised location of bike path lighting fixtures and Notes 2. Added Detail 1 and 3.	RSB	EJL	Bike Path Lighting
1	8/29/08	Added Conduit Numbers 2706A, 2723A, 2806A, 2823A, PB-LTG and Sheet Notes 7. Re-routed 2706 and 2806.	EJL	ECR	Light Pipe

REVISIONS

CONTRACT CHANGE ORDER NO. 121
SHEET 3 OF 7

ROADWAY AND GIRDER LEVEL EASTBOUND
(LIGHTING AND ELECTRICAL SYSTEMS)
SCALE: 1:200

E-50

THIS PLAN IS ACCURATE FOR ELECTRICAL WORK ONLY.

STATE OF CALIFORNIA - DEPARTMENT OF TRANSPORTATION
Caltrans

DESIGN OVERSIGHT: BEHZAD GOLEMOHAMMADI

CALCULATED/DESIGNED BY: FK — DATE 2/06 — REVISED BY
CHECKED BY: AB — 2/06 — DATE REVISED

FOR REDUCED PLANS ORIGINAL SCALE IS IN MILLIMETERS 0 20 40 60 80

DGN FILE => T:\13103\MS\psr\OTD-Contract 1\CCO\Electrical\CCO_Bike Path\4012Jluc050R2.dgn
USERNAME => llorico

CU 04251 | EA 0120L1

LAST REVISION 00-00-00 | DATE PLOTTED => 6/10/2009 | TIME PLOTTED => 4:52:01 PM

DIST	COUNTY	ROUTE	KILOMETER POST TOTAL PROJECT	SHEET No	TOTAL SHEETS
04	Ala	80	1.6/2.7	426 R1	643

Jens Erlingsson 05/15/06
REGISTERED ELECTRICAL ENGINEER DATE

1-29-07
PLANS APPROVAL DATE

REGISTERED PROFESSIONAL ENGINEER JENS ERLINGSSON No. 8249 Exp. 9/30/08 ELECTRICAL STATE OF CALIFORNIA

PB POWER, Inc.
A Parsons Brinckerhoff Company
303 Second St., Suite 700N
San Francisco, CA 94107-1317

The State of California or its officers or agents shall not be responsible for the accuracy or completeness of electronic copies of this plan sheet.

Caltrans now has a web site! To get to the web site, go to http://www.dot.ca.gov

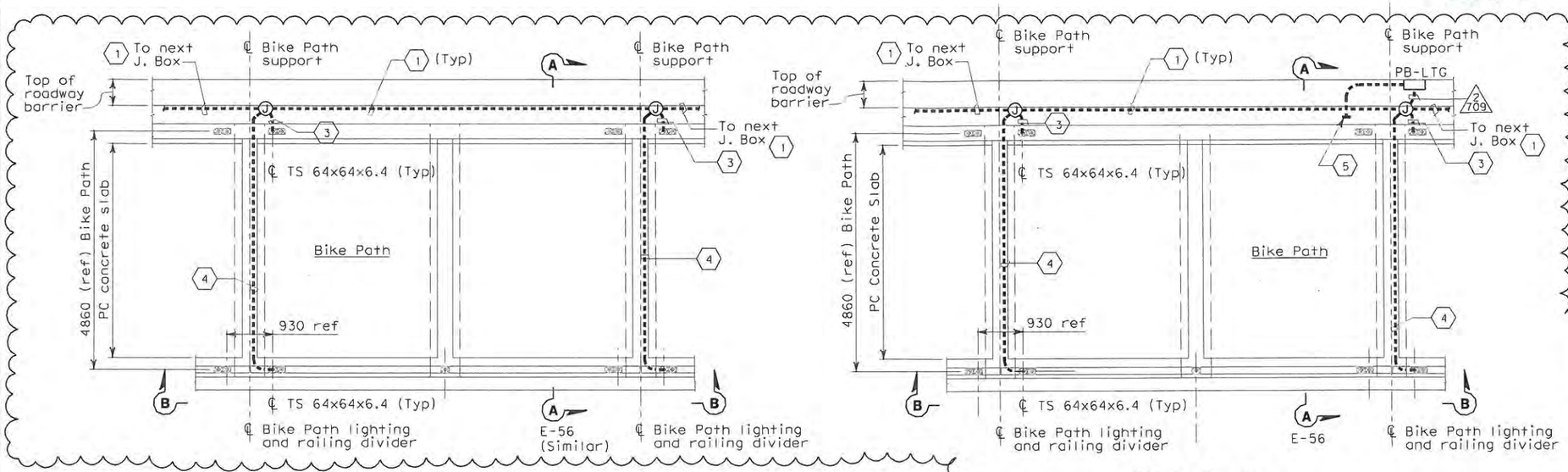

DETAIL 1
BIKE PATH LIGHTING PLAN
TYPICAL CONDUIT ARRANGEMENT (See sheets E-49 and E-50)
NO SCALE

DETAIL 2
BIKE PATH LIGHTING PLAN
CONDUIT ARRANGEMENT (See sheet E-49)
NO SCALE

SHEET NOTES:

1. 41C, Main conduit run located between roadway barrier and bike path. ~~For number of conductors, see wiring diagrams.~~
2. For connection and mounting details, see sheets E-56 and E-57.
3. 21C, Flexible metallic conduit (2 #12 + #12 G - NIC)
4. 21C, RGS Conduit (2 #12 + #12 G - NIC).
5. Typical 21C RGS PVC coated future light pipe stub out from PB-LTG, For location of stub out and light pipe housing, see sheets E-62A and E-62B.

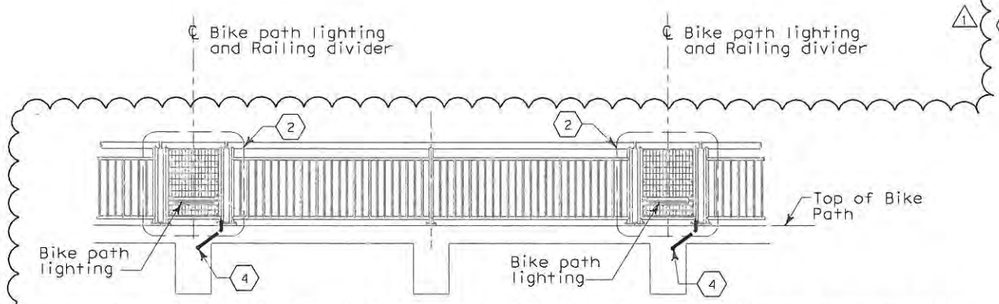

ELEVATION B-B
BIKE PATH RAILING
SCALE: 1:40

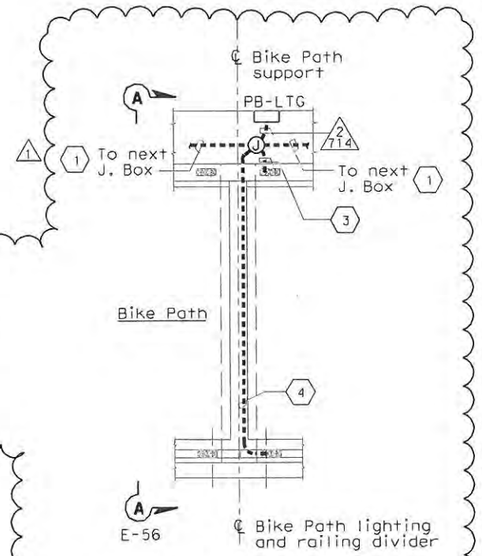

DETAIL 3
BIKE PATH LIGHTING PLAN
CONDUIT ARRANGEMENT (See sheet E-50)
NO SCALE

NOTES:

1. All exposed conduits and fittings installed between the Roadway and the Bike Path shall be PVC coated galvanized steel.
2. For locations of PB-LTG and PB-COM at the Roadway concrete/steel barrier, see sheets E-49 and E-50.
3. References:
   - For Bike Path schedule, see sheet E-76.
   - For pull box schedule, see sheet E-77.
4. For railing details, refer to structural drawings "Bike Path Railings Details".

REGISTERED PROFESSIONAL ENGINEER FADI WALIEDDINE No. 11465 Exp. 12/31/2009 ELECTRICAL STATE OF CALIFORNIA

MARK	DATE	DESCRIPTIONS	REV	CK	CCO NO.
1	6/12/09	Revised Typical Elevation B-B and Detail 1. Added Detail 2 and 3, Sheet Notes 3, 4 and 5	RSB	EJL	Bike Path Lighting
		REVISIONS			

CONTRACT CHANGE ORDER NO. 121
SHEET 4 OF 7

DETAILS
ROADWAY AND GIRDER LEVEL EASTBOUND
TYPICAL BIKE PATH PLAN AND ELEVATION
SCALE AS NOTED

E-55

THIS PLAN ACCURATE FOR ELECTRICAL WORK ONLY.

STATE OF CALIFORNIA - DEPARTMENT OF TRANSPORTATION
Caltrans

DESIGN OVERSIGHT: BEHZAD GOLEMOHAMMADI

CALCULATED/DESIGNED BY: FK | DATE 2/06 | REVISED BY
CHECKED BY: AB | 2/06 | DATE REVISED

FOR REDUCED PLANS ORIGINAL SCALE IS IN MILLIMETERS 0 20 40 60 80

DGN FILE =>T:\13103\MS\pse\OTD-Contract 1\CCO\Electrical\CCO_Bike Path\40120lua055r1.dgn
USERNAME =>florico
CU 04251 | EA 0120L1

DATE PLOTTED => 6/10/2009
TIME PLOTTED => 4:52:26 PM
LAST REVISION 00-00-00

DIST	COUNTY	ROUTE	KILOMETER POST TOTAL PROJECT	SHEET NO	TOTAL SHEETS
04	Ala	80	1.6/2.7	427 R2	643

REGISTERED ELECTRICAL ENGINEER 05/15/06 DATE

1-29-07
PLANS APPROVAL DATE

REGISTERED PROFESSIONAL ENGINEER JENS ERLINGSSON No. 8249 Exp. 9/30/08 ELECTRICAL STATE OF CALIFORNIA

PB POWER, Inc.
A Parsons Brinckerhoff Company
303 Second St., Suite 700N
San Francisco, CA 94107-1317

The State of California or its officers or agents shall not be responsible for the accuracy or completeness of electronic copies of this plan sheet.

Caltrans now has a web site! To get to the web site, go to http://www.dot.ca.gov

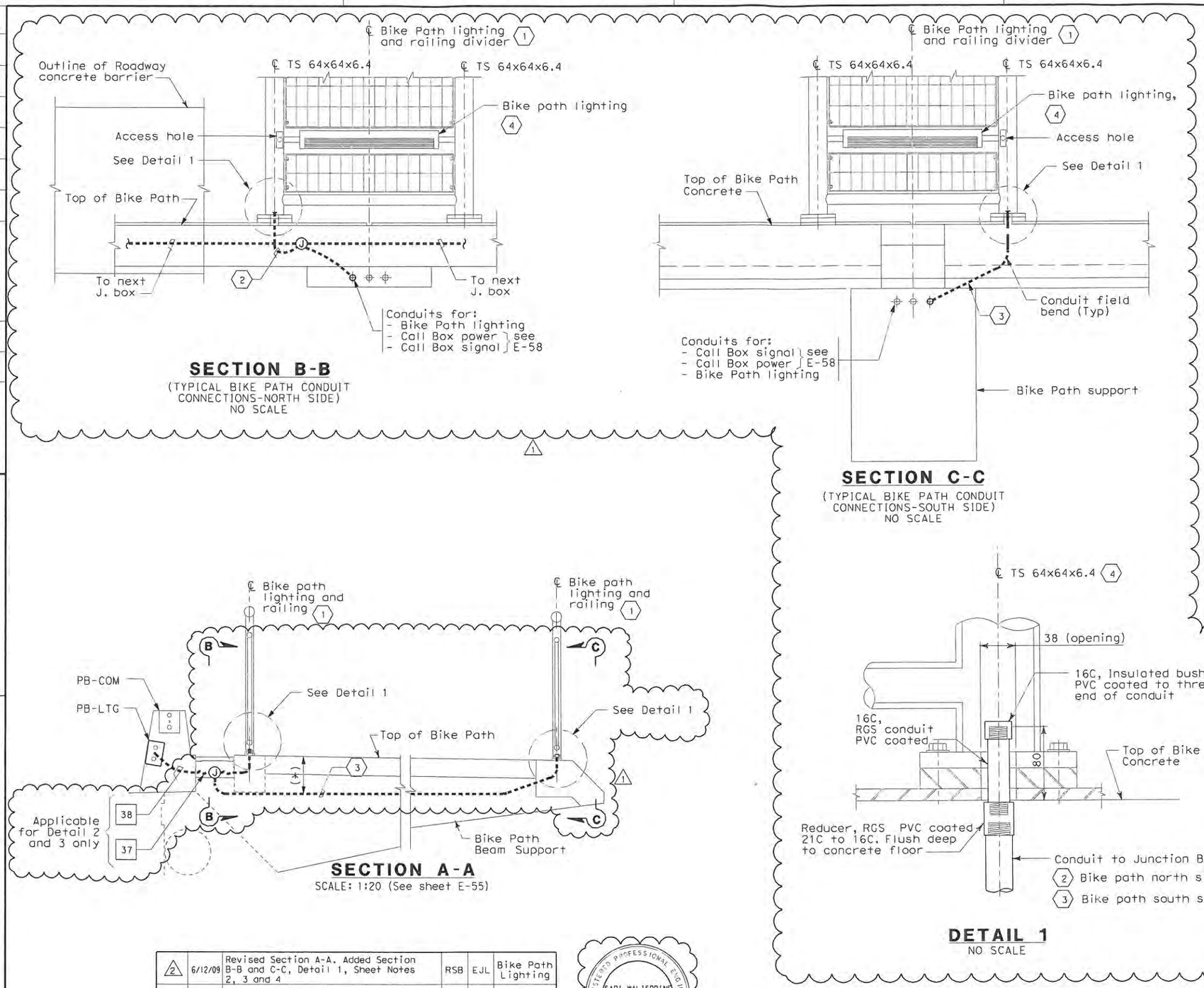

SHEET NOTES:

(1) For details of Bike railing and Lighting Fixtures mounting , see Structures plan sheets and Sheet E-57.

(2) 21C, Flexible metallic conduit (2 #12 + #12 G - NIC)

(3) 21C, RGS Conduit (2 #12 + #12 G - NIC).

(4) Prior to installing the bike path railing to the structure, the Contractor shall provide a pull rope inside the conduit. The pull rope end shall be inside the bike path lighting housing.

NOTES:

1. All exposed conduit and fittings installed including between Roadway barrier and Bike Path shall be PVC COATED RGS.
2. For locations of PB-LTG and PB-COM at the concrete barriers, see Sheets E-49 and E-50.
3. Refefences:
   - For pull box schedule, see Sheet E-77.
   - For Bike Path schedule, see Sheet E-76.
4. (*) Dimensions to be provided by Structural.

MARK	DATE	DESCRIPTIONS	REV	CK	CCO NO.
2	6/12/09	Revised Section A-A. Added Section B-B and C-C, Detail 1, Sheet Notes 2, 3 and 4	RSB	EJL	Bike Path Lighting
1	11/7/08	Changed location of barrier PB-LTG.	JH	EJL	Barrier PB-LTG

REVISIONS

CONTRACT CHANGE ORDER NO. 121
SHEET 5 OF 7

REGISTERED PROFESSIONAL ENGINEER FADI WALIEDDINE No. 11465 Exp. 12/31/2009 ELECTRICAL STATE OF CALIFORNIA

DETAILS
ROADWAY AND GIRDER LEVEL EASTBOUND TYPICAL BIKE PATH LIGHTING DETAILS
SCALE AS NOTED

E-56

STATE OF CALIFORNIA - DEPARTMENT OF TRANSPORTATION
Caltrans

DESIGN OVERSIGHT: BEHZAD GOLEMOHAMMADI

CALCULATED/DESIGNED BY: FK | DATE 2/06 | REVISED BY
CHECKED BY: AB | 2/06 | DATE REVISED

LAST REVISION 00-00-00 | DATE PLOTTED => 6/10/2009 | TIME PLOTTED => 4:52:53 PM

FOR REDUCED PLANS ORIGINAL SCALE IS IN MILLIMETERS 0 20 40 60 80

DGN FILE =>T:\13103\MS\pse\OTD-Contract 1\CCO\Electrical\CCO_Bike Path\401201ua056R2.dgn
USERNAME =>llorico

CU 04251 | EA 0120L1

DIST	COUNTY	ROUTE	KILOMETER POST TOTAL PROJECT	SHEET NO	TOTAL SHEETS
04	Ala	80	1.6/2.7	429 R3	643

REGISTERED ELECTRICAL ENGINEER 05/15/06 DATE

1-29-07
PLANS APPROVAL DATE

PB POWER, Inc.
A Parsons Brinckerhoff Company
303 Second St., Suite 700N
San Francisco, CA 94107-1317

The State of California or its officers or agents shall not be responsible for the accuracy or completeness of electronic copies of this plan sheet.

Caltrans now has a web site! To get to the web site, go to http://www.dot.ca.gov

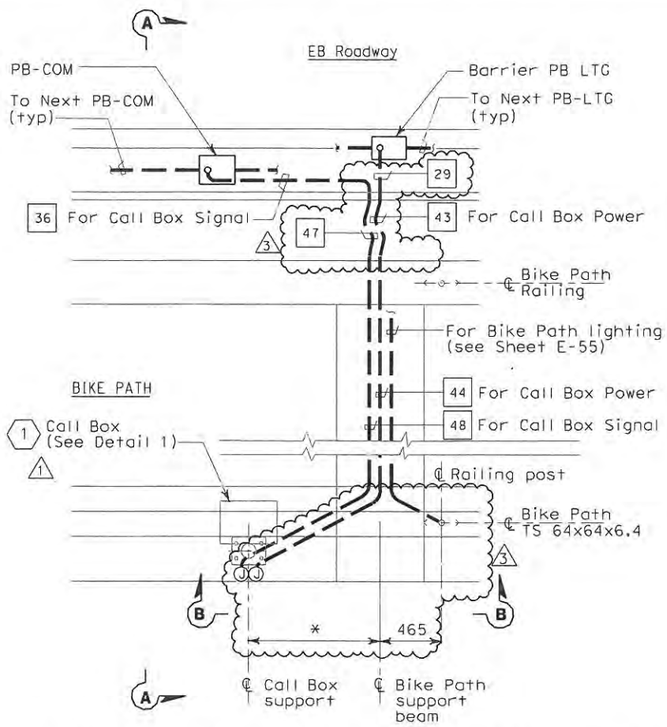

TYPICAL BIKE PATH CALL BOX - PLAN
SCALE: 1:20

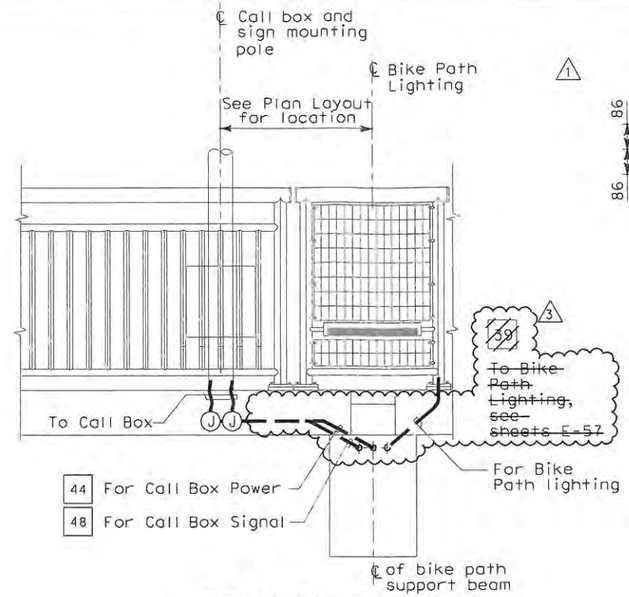

SECTION B-B
SCALE: 1:20

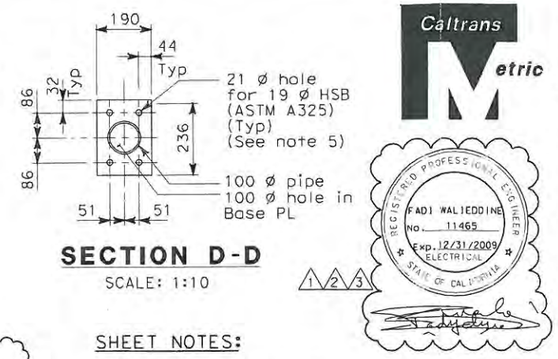

SECTION D-D
SCALE: 1:10

SHEET NOTES:

1. For connection and mounting details of Call Box on railings, refer to Structural railing details.

NOTES:

1. All exposed conduits and fittings installed between the Roadway and the Bike Path shall be PVC coated RGS.
2. For locations of PB-LTG and PB-COM at the Roadway concrete barrier, see sheets E-49 and E-50.
3. (*) Dimensions to be provided by structural.
4. References:
   - For pull box schedule, see sheet E-77.
   - For call box schedule, see sheet E-171.

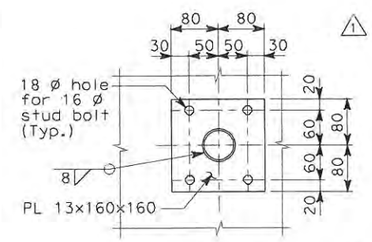

SECTION C-C
SCALE: 1:5

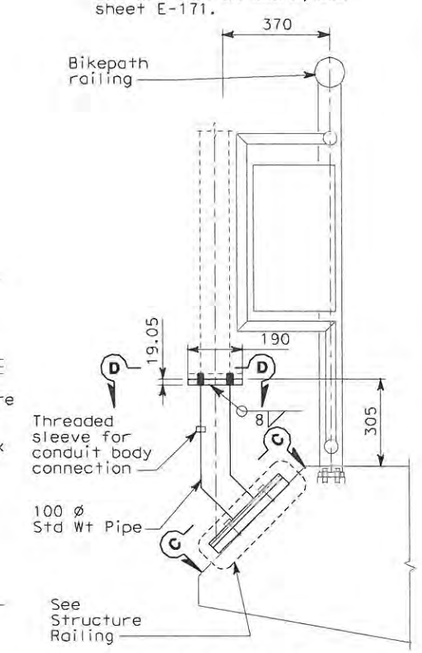

DETAIL 3
SCALE: 1:10

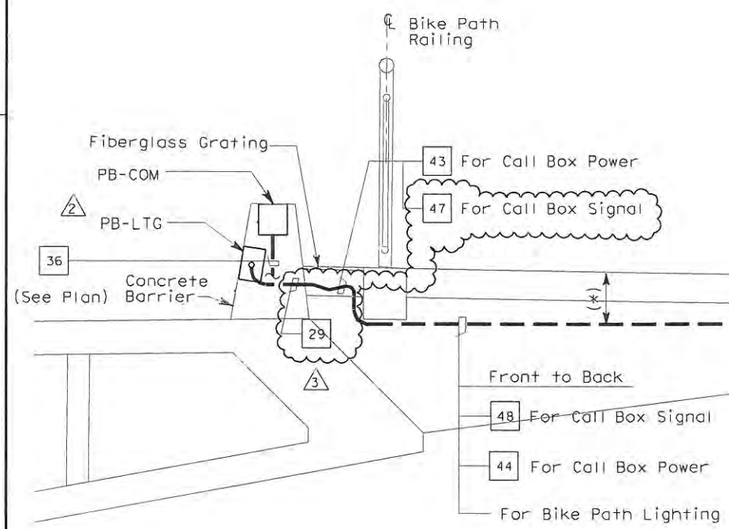

SECTION A-A
SCALE=1:20

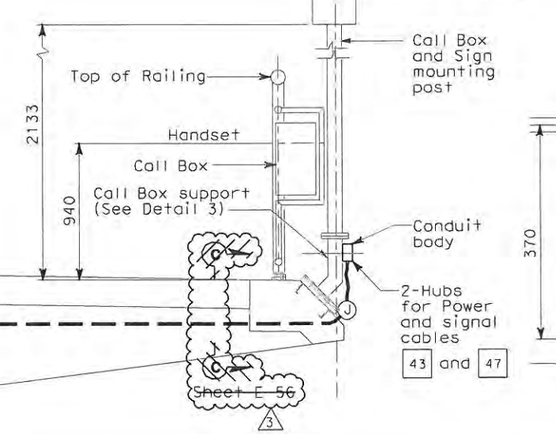

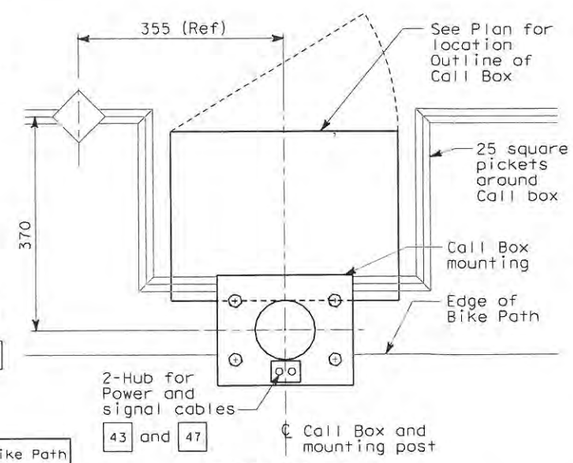

DETAIL 1
SCALE: 1:10

MARK	DATE	DESCRIPTIONS	REV	CK	CCO NO.
3	6/12/09	Revised Bike Path and Call Box Conduit Routing	RSB	EJL	Bike Path Lighting
2	11/7/08	Changed location of barrier PB-LTG	JH	EJL	Barrier PB-LTG
1	8/29/08	Added Details 1 and 3, Sections C and D for Call Box mounting. Deleted Detail 2.	ECR	EJL	18S1

REVISIONS

CONTRACT CHANGE ORDER NO. 121
SHEET 6 OF 7

DETAILS
ROADWAY AND GIRDER LEVEL EASTBOUND TYPICAL CALL BOX PLAN AND SECTIONS
SCALE AS NOTED

E-58

REVISED BY	DATE REVISED

CALCULATED/DESIGNED BY	CHECKED BY
FK	AB

DATE 2/06 2/06

DESIGN OVERSIGHT
BEHZAD GOLEMOHAMMADI

STATE OF CALIFORNIA - DEPARTMENT OF TRANSPORTATION
Caltrans

FOR REDUCED PLANS ORIGINAL SCALE IS IN MILLIMETERS 0 20 40 60 80

DGN FILE =>T:\13103\Ms\pse\DTD-Contract 1\CCO'Electrical\CCO_Bike Path\4012OlUa058r3.dgn
USERNAME =>llorico

CU 04251 EA 0120L1

LAST REVISION 00-00-00

DATE PLOTTED => 6/10/2009
TIME PLOTTED => 4:53:10 PM

DIST	COUNTY	ROUTE	KILOMETER POST TOTAL PROJECT	SHEET No	TOTAL SHEETS
04	Ala	80	1.6/2.7	450 R2	643

REGISTERED ELECTRICAL ENGINEER 05/15/06 DATE

1-29-07
PLANS APPROVAL DATE

REGISTERED PROFESSIONAL ENGINEER JENS ERLINGSSON No. 8249 Exp. 9/30/08 ELECTRICAL STATE OF CALIFORNIA

PB POWER, Inc.
A Parsons Brinckerhoff Company
303 Second St., Suite 700N
San Francisco, CA 94107-1317

The State of California or its officers or agents shall not be responsible for the accuracy or completeness of electronic copies of this plan sheet.

Caltrans now has a web site! To get to the web site, go to http://www.dot.ca.gov

Caltrans Metric

LIGHTING PANEL LP-281 (CKT #2621-2) △1

LOCATION: OAKLAND APPROACH SERVICE PLATFORM #22E

LOAD DESCRIPTION	LTG	CB		CB	LTG	LOAD DESCRIPTION
Bike path LTG (12)	636	20/1	1 A 2	20/1	583	Bike path Ltg (11)
Bike path LTG (12) △2	636	20/1	3 B 4	20/1	583	Bike path Ltg (11) △2
Spare		20/1	5 C 6	20/1		Spare
		20/1	7 A 8	20/1		
		20/1	9 B 10	20/1		Spare
		20/1	11 C 12	20/1		
Space			13 A 14			Space
			15 B 16			△1
			17 C 18			
TOTAL VA	1272 △2				1166 △2	TOTAL VA

LOAD SUMMARY IN VA
Lighting (AT 100%): 2438 VA △2

TOTAL kVA: 2.44 kVA △2
TOTAL Amperes: 6.8 A at 208 V, 3 ø

BALANCE (kVA)
Phase A - 1.219
Phase B - 1.219 △2
Phase C - 0.0

VOLTAGE: 208/120 V
PHASE/WIRES: 3-phase,4-wire
BUS RATING: 100 A
MAIN: 60 A
MOUNTING: SURFACE △1
K.A.I.C.: 10

⬡1

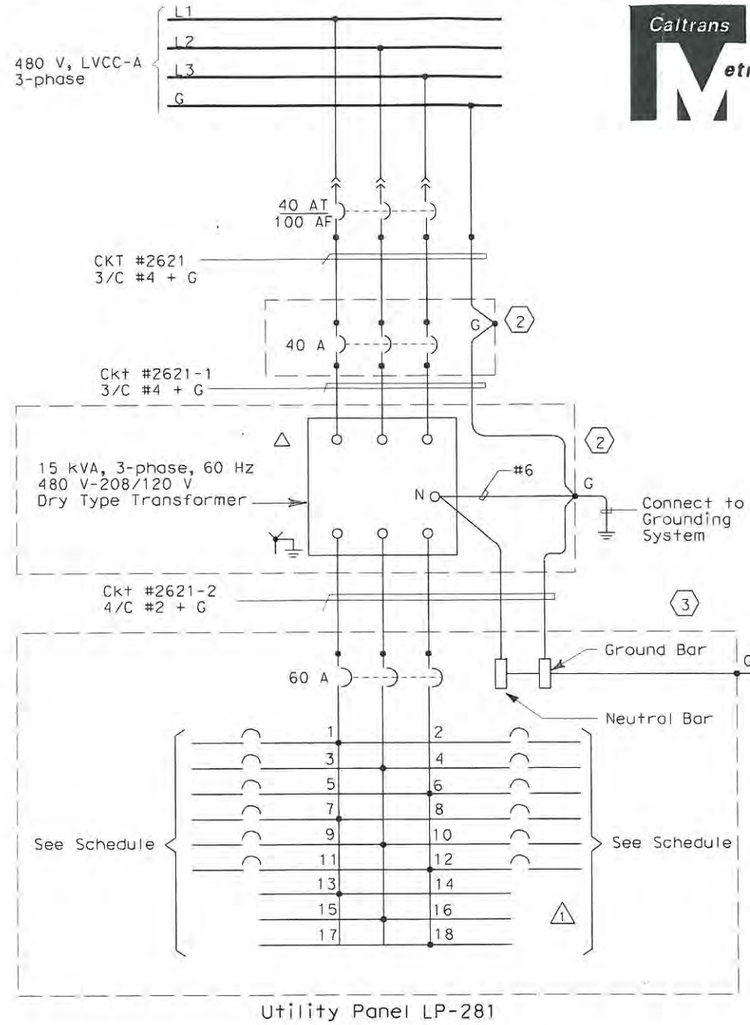

SHEET NOTES:

⬡1 Contractor shall provide Nameplates and Circuit Schedules as shown.

⬡2 480 V Circuit breaker, transformer, and panelboard are separate components, all NEMA 4X, stainless steel enclosures.

⬡3 The panelboard NEMA 4X enclosure is the PB-8A.

NOTE:

1. References:
   - For LVCC-A single line diagram, see sheet E-130
   - For pull box schedule, see sheet E-44
   - For service platform 22E, see sheet E-53

MARK	DATE	DESCRIPTIONS	REV	CK	CCO NO.
△2	6/12/09	Revised circuit numbers for bike path lighting and number of fixtures per circuit	RSB	EJL	Bike Path Lighting
△1	4/30/08	Replace mini-power center to individual components. Add circuit numbers.	ECR	EJL	65

REVISIONS

REGISTERED PROFESSIONAL ENGINEER FADI WALIEDDINE No. 11465 Exp. 12/31/2009 ELECTRICAL STATE OF CALIFORNIA △1 △2

CONTRACT CHANGE ORDER NO. 121
SHEET 7 OF 7

DETAILS
ROADWAY AND GIRDER LEVEL EASTBOUND
LP-281 PANEL SCHEDULE
NO SCALE

E-79

STATE OF CALIFORNIA - DEPARTMENT OF TRANSPORTATION
Caltrans

DESIGN OVERSIGHT: BEHZAD GOLEMOHAMMADI

CALCULATED/DESIGNED BY: FK | DATE: 2/06 | REVISED BY
CHECKED BY: AB | 2/06 | DATE REVISED

LAST REVISION 00-00-00 | DATE PLOTTED => 6/10/2009 | TIME PLOTTED => 4:53:28 PM

FOR REDUCED PLANS ORIGINAL SCALE IS IN MILLIMETERS 0 20 40 60 80

DGN FILE =>T:\13102\MS\bse\DTD-Contract 1\CCO\Electrical\CCO_Bike Path\401201ua079r2.dgn
USERNAME =>llorico

CU 04251 | EA 0120L1

STATE OF CALIFORNIA - DEPARTMENT OF TRANSPORTATION

CONTRACT CHANGE ORDER

Change Requested by: Engineer

CCO: 122	Suppl. No. 0	Contract No. 04 - 0120L4	Road ALA-80-1.6/2.7	FED. AID LOC.: NO FED AID

To: **M C M CONSTRUCTION INC**

You are directed to make the following changes from the plans and specifications or do the following described work not included in the plans and specifications for this contract. ***NOTE: This change order is not effective until approved by the Engineer.***

Description of work to be done, estimate of quantities and prices to be paid. (Segregate between additional work at contract price, agreed price and force account.) Unless otherwise stated, rates for rental of equipment cover only such time as equipment is actually used and no allowance will be made for idle time. This last percentage shown is the net accumulated increase or decrease from the original quantity in the Engineer's Estimate.

Eliminate concrete barrier west of Pier E17 on Bridge No. 34-0006L/R and on existing Skyway structure. Exact limits will be laid out in the field.

Estimate of Decrease in Contract Item at Contract Price:

Item No. 164: CONCRETE BARRIER (TYPE 732 MODIFIED)
-197 M (–13.81%) $180.00 /M = –$35,460.00 (–13.81%)

Total cost for Decrease in Contract Item.....($35,460.00)

Extra Work at Force Account:

Install safety railing cable on top of the concrete barrier for the entire length of Bridge No. 34-0006L/R and the precast retaining wall. Details for railing shall be approved by the Engineer.

Place 42" high orange water filled k-rail along the limits of the deleted concrete barrier and transversely at Temporary Bent 19AR. Exact limits will be laid out in the field.

Estimated cost of Extra Work at Force Account $70,000.00

Adjustment of Compensation at Unit Price:

Place barrier rebar on Bridge No. 34-0006L/R from west of Pier E17 to west end of structure per the contract plans. For this work the contractor will be paid $78.66 per meter of rebar placed. This price constitutes full compensation, including all markups, for the work of this change.

112 M @ $78.66 per M = $8,809.00

Adjustment of Compensation at Agreed Unit Price $8,809.00

Estimated Cost: Increase ☑ Decrease ☐ **$43,349.00**

By reason of this order the time of completion will be adjusted as follows: 0 days

Submitted by

Signature	Resident Engineer BEN GHAFGHAZI	Date 9/24/09

Approval Recommended by

Signature	Construction Manager Amer Bata	Date 9/30/09

Engineer Approval by

Signature	Construction Manager Amer Bata	Date 10/19/09

We the undersigned contractor, have given careful consideration to the change proposed and agree, if this proposal is approved, that we will provide all equipn furnish the materials, except as may otherwise be noted above, and perform all services necessary for the work above specified, and will accept as full paymer therefor the prices shown above.

NOTE: If you, the contractor, do not sign acceptance of this order, your attention is directed to the requirements of the specifications as to proceeding with the ordered work and filing a written protest within the time therein specified.

Contractor Acceptance by

Signature	(Print name and title) EDMUNDO A. PUCHI, TREASURER	Date 10/15/09

STATE OF CALIFORNIA - DEPARTMENT OF TRANSPORTATION

CONTRACT CHANGE ORDER MEMORANDUM

TO: AMER BATA / BEN GHAFGHAZI

FROM: BEN GHAFGHAZI

FILE: **E.A.** 04 - 0120L4
CO-RTE-PM ALA-80-1.6/2.7
FED. NO. NO FED AID

CCO#: **122** SUPPLEMENT#: **0** Category Code: **CKPT**

CONTINGENCY BALANCE (incl. this change) **$4,535,294.40**

COST: **$43,349.00** INCREASE ☑ DECREASE ☐

HEADQUARTERS APPROVAL REQUIRED? ☐ YES ☑ NO

SUPPLEMENTAL FUNDS PROVIDED: **$0.00**

IS THIS REQUEST IN ACCORDANCE WITH ENVIRONMENTAL DOCUMENTS? ☑ YES ☐ NO

CCO DESCRIPTION:
Eliminate barrier west of E17.

PROJECT DESCRIPTION:
Construct bridge, roadway, building and electrical system.

Original Contract Time:	Time Adj. This Change:	Previously Approved CCO Time Adjustments:	Percentage Time Adjusted: (including this change)	Total # of Unreconciled Deferred Time CCO(s): (including this change)
810 Day(s)	**0** Day(s)	**184** Day(s)	**23** %	**11**

THIS CHANGE ORDER PROVIDES FOR:
Eliminating 197M of concrete barrier west of Pier E17 on Bridge No. 34-0006L/R and on existing Skyway structure. Installing safety railing cable on top of the concrete barrier for the entire length of Bridge No. 34-0006L/R and on the precast retaining wall. Placing 42" high orange water filled k-rail along the limits of the deleted concrete barrier and transversely at Temporary Bent 19AR. Exact limits for all of the above work will be laid out in the field.

The contract calls for concrete barrier to be installed on the East end of the existing EB and WB Skyway structures, however, within the barrier limits is an existing temporary steel Acrow bridge connecting the eastbound and westbound Skyway structures. This bridge is needed as access for other ongoing and future SFOBB contracts and cannot be removed at this time. The railing west of Pier E17 is being eliminated and will be installed later to ensure a smooth top of concrete profile for the barrier from Pier 17 (OTD1) towards Pier 16 (Skyway). Barrier rebar will be placed at this time since it is tied into the OTD1 bridge structure. The concrete work will be added to future contract 04-0120M4.

Installing safety railing cable and water filled k-rail is necessary for safety of workers until permanent work is completed.

Eliminating barrier will be done as a decrease in Item No. 164, Concrete Barrier (Type 732 Modified), of 197 M for a credit of $35,460.00. Placing barrier rebar will be performed as an Adjustment of Compensation at Agreed Unit Price of $78.66 per M for 112 M. A detailed cost analysis has been performed and is on file at the Resident Engineer's office. The safety railing cable and water filled k-rail will be paid as Extra Work at Force Account for $70,000.00, which can be financed from the contingency fund. Total cost for this CCO is $43,349.00, which can be financed form the contingency fund.

This change has been discussed and concurred with Hasan El-Natur of Structures Design and Jal Birdy of Moffat Nichol. Maintenance concurrence is not necessary because the barrier work will be completed on another contract. The safety railing cable and k-rail is temporary work.

No adjustment of contract time is warranted since this change does not affect the controlling operation.

ADA Notice: For individuals with sensory disabilities, this document is available in alternate formats. For information call: (916) 654-6410 or TDD (916) 654-3880 or write Records and Forms Management, 1120 N Street, MS-89, Sacramento, CA 95814.

CONCURRED BY:			
Construction Engineer:	Ben Ghafghazi	Date	9/24/09
Bridge Engineer:	Mehran Ardakanian	Date	9/24/09
Project Engineer:	Hasan El-Natur, Structures Design	Date	6/25/09
Project Manager:		Date	
FHWA Rep.:		Date	
Environmental:		Date	
Other (specify):	Jal Birdy, Moffat Nichol	Date	6/25/09
Other (specify):		Date	
District Prior Approval By:		Date	
HQ (Issue Approve) By:		Date	
Resident Engineer's Signature:		Date	9/24/09

ESTIMATE OF COST

	THIS REQUEST	TOTAL TO DATE
ITEMS	($35,460.00)	($35,460.00)
FORCE ACCOUNT	$70,000.00	$70,000.00
AGREED PRICE	$0.00	$0.00
ADJUSTMENT	$8,809.00	$8,809.00
TOTAL	$43,349.00	$43,349.00

FEDERAL PARTICIPATION

☐ PARTICIPATING ☐ PARTICIPATING IN PART ☑ NONE
☐ NON-PARTICIPATING (MAINTENANCE) ☐ NON-PARTICIPATING

FEDERAL SEGREGATION (if more than one Funding Source or P.I.P. type)
☑ CCO FUNDED PER CONTRACT ☐ CCO FUNDED AS FOLLOWS

FEDERAL FUNDING SOURCE	PERCENT

ADA Notice: For individuals with sensory disabilities, this document is available in alternate formats. For information call: (916) 654-6410 or TDD (916) 654-3880 or write Records and Forms Management, 1120 N Street, MS-89, Sacramento, CA 95814.

STATE OF CALIFORNIA - DEPARTMENT OF TRANSPORTATION

CONTRACT CHANGE ORDER MEMORANDUM

DATE: 6/3/2010

TO: AMER BATA / BEN GHAFGHAZI

FROM: BEN GHAFGHAZI

FILE: **E.A.** 04 - 0120L4
CO-RTE-PM ALA-80-1.6/2.7
FED. NO. NO FED AID

CCO#: **122** SUPPLEMENT#: **1** Category Code: **CKPT**

CONTINGENCY BALANCE (incl. this change) **$1,543,908.90**

COST: **$50,000.00** INCREASE ☑ DECREASE ☐

HEADQUARTERS APPROVAL REQUIRED? ☐ YES ☑ NO

SUPPLEMENTAL FUNDS PROVIDED: **$0.00**

IS THIS REQUEST IN ACCORDANCE WITH ENVIRONMENTAL DOCUMENTS? ☑ YES ☐ NO

CCO DESCRIPTION:
Additional Funds

PROJECT DESCRIPTION:
Construct bridge, roadway, building and electrical system.

Original Contract Time:	Time Adj. This Change:	Previously Approved CCO Time Adjustments:	Percentage Time Adjusted: (including this change)	Total # of Unreconciled Deferred Time CCO(s): (including this change)
810 Day(s)	0 Day(s)	184 Day(s)	23 %	0

THIS CHANGE ORDER PROVIDES FOR:

Additional funds for installing safety railing cable on top of the concrete barrier for the entire length of Bridge No. 34-0006L/R and on the precast retaining wall, and also for placing 42" high orange water filled k-rail along the limits of the deleted concrete barrier and transversely at Temporary Bent 19AR. Exact limits for all of the above work will be laid out in the field.

CCO 122, Supplement 0, was written to eliminate a portion of the concrete barrier on EB and WB of the Skyway structures (due to the presence of the acrow bridge), and to install safety railing cable and water filled k-rail is necessary for safety of workers until permanent work is completed. The work of installing safety cable and water-filled k-rails has exceeded the originally anticipated cost of $70,000.00, and it has been determined that an additional $50,000.00 is required to complete this work.

Therefore, payment for this work will be at Extra Work at Force Account for an estimated cost of $50,000.00, which can be financed from the contingency fund.

This change has been discussed and concurred with Hasan El-Natur of Structures Design and Jal Birdy of Moffat Nichol. Maintenance concurrence is not necessary because the barrier work will be completed on another contract. The safety railing cable and k-rail is temporary work.

No adjustment of contract time is warranted since this change does not affect the controlling operation.

CONCURRED BY:

Construction Engineer:	Ben Ghafghazi	Date 6/3/2010
Bridge Engineer:	Mehran Ardakanian	Date 9/24/09
Project Engineer:	Hasan El-Natur, Struc. Design	Date 6/25/09
Project Manager:		Date
FHWA Rep.:		Date
Environmental:		Date
Other (specify):	Jal Birdy, Moffat Nichol	Date 6/25/09
Other (specify):		Date
District Prior Approval By:		Date
HQ (Issue Approve) By:		Date
Resident Engineer's Signature:		Date 6/3/2010

ESTIMATE OF COST

	THIS REQUEST	TOTAL TO DATE
ITEMS	$0.00	($35,460.00)
FORCE ACCOUNT	$50,000.00	$120,000.00
AGREED PRICE	$0.00	$0.00
ADJUSTMENT	$0.00	$8,809.00
TOTAL	$50,000.00	$93,349.00

FEDERAL PARTICIPATION

☐ PARTICIPATING ☐ PARTICIPATING IN PART ☑ NONE
☐ NON-PARTICIPATING (MAINTENANCE) ☐ NON-PARTICIPATING

FEDERAL SEGREGATION (if more than one Funding Source or P.I.P. type)
☑ CCO FUNDED PER CONTRACT ☐ CCO FUNDED AS FOLLOWS

FEDERAL FUNDING SOURCE	PERCENT

ADA Notice: For individuals with sensory disabilities, this document is available in alternate formats. For information call: (916) 654-6410 or TDD (916) 654-3880 or write Records and Forms Management, 1120 N Street, MS-89, Sacramento, CA 95814.

STATE OF CALIFORNIA - DEPARTMENT OF TRANSPORTATION

CONTRACT CHANGE ORDER

Change Requested by: Engineer

CCO: 122	Suppl. No. 1	Contract No. 04 - 0120L4	Road ALA-80-1.6/2.7	FED. AID LOC.: NO FED AID

To: **M C M CONSTRUCTION INC**

You are directed to make the following changes from the plans and specifications or do the following described work not included in the plans and specifications for this contract. ***NOTE: This change order is not effective until approved by the Engineer.***

Description of work to be done, estimate of quantities and prices to be paid. (Segregate between additional work at contract price, agreed price and force account.) Unless otherwise stated, rates for rental of equipment cover only such time as equipment is actually used and no allowance will be made for idle time. This last percentage shown is the net accumulated increase or decrease from the original quantity in the Engineer's Estimate.

Extra Work at Force Account:

Additional funds to install safety railing cable on top of the concrete barrier for the entire length of Bridge No. 34-0006L/R and the precast retaining wall. Details for railing shall be approved by the Engineer. Also place 42" high orange water filled k-rail along the limits of the deleted concrete barrier and transversely at Temporary Bent 19AR. Exact limits will be laid out in the field.

Estimated cost of Extra Work at Force Account $50,000.00

Estimated Cost: Increase ☑ **Decrease** ☐ **$50,000.00**

By reason of this order the time of completion will be adjusted as follows: 0 days

Submitted by		
Signature	**Resident Engineer** Ben Ghafghazi	**Date** 6/3/2010
Approved by		
Signature	**Construction Engineer** Ben Ghafghazi	**Date** 6/3/2010
Concurrence by		
Signature	**Construction Manager** Amer Bata	**Date** 6/3/10

We the undersigned contractor, have given careful consideration to the change proposed and agree, if this proposal is approved, that we will provide all equipment, furnish the materials, except as may otherwise be noted above, and perform all services necessary for the work above specified, and will accept as full payment therefor the prices shown above.

NOTE: If you, the contractor, do not sign acceptance of this order, your attention is directed to the requirements of the specifications as to proceeding with the ordered work and filing a written protest within the time therein specified.

Contractor Acceptance by		
Signature	**(Print name and title)**	**Date**

STATE OF CALIFORNIA - DEPARTMENT OF TRANSPORTATION

CONTRACT CHANGE ORDER

Change Requested by: Engineer

CCO: 123	Suppl. No. 1	Contract No. 04 - 0120L4	Road ALA-80-1.6/2.7	FED. AID LOC.: NO FED AID

To: **M C M CONSTRUCTION INC**

You are directed to make the following changes from the plans and specifications or do the following described work not included in the plans and specifications for this contract. ***NOTE: This change order is not effective until approved by the Engineer.***

Description of work to be done, estimate of quantities and prices to be paid. (Segregate between additional work at contract price, agreed price and force account.) Unless otherwise stated, rates for rental of equipment cover only such time as equipment is actually used and no allowance will be made for idle time. This last percentage shown is the net accumulated increase or decrease from the original quantity in the Engineer's Estimate.

TIME ADJUSTMENT:

A determination of the delay in completion of the contract due to the work specified by Contract Change Order No. 123 has been made in accordance with the provisions of Section 8-1.07 of the Standard Specifications.

Time Adjustment = 0 Days

Acceptance of this change order constitutes an agreement of full resolution of all time impact costs resulting from Change Order No. 123.

This change order acts to resolve the deferred time issued on Change Order No. 123, and no additional time shall be granted.

Estimated Cost: **Increase** ☐ **Decrease** ☐ **$0.00**

By reason of this order the time of completion will be adjusted as follows: 0 days

Signature	~~**Resident Engineer**~~ Ben Ghafghazi	**Date** 4/7/2010
Signature	~~**Construction Engineer**~~ Ben Ghafghazi	**Date** 4/7/2010
Signature	**Construction Manager** Amer Bata	**Date** 7/14/10

We the undersigned contractor, have given careful consideration to the change proposed and agree, if this proposal is approved, that we will provide all equipment, furnish the materials, except as may otherwise be noted above, and perform all services necessary for the work above specified, and will accept as full payment therefor the prices shown above.

NOTE: If you, the contractor, do not sign acceptance of this order, your attention is directed to the requirements of the specifications as to proceeding with the ordered work and filing a written protest within the time therein specified.

Signature	**(Print name and title)** JAMES A. CARTER, PRESIDENT	**Date** 7/14/10

STATE OF CALIFORNIA - DEPARTMENT OF TRANSPORTATION

CONTRACT CHANGE ORDER MEMORANDUM

DATE: 4/6/2010 Page 1 of 1

TO: AMER BATA / BEN GHAFGHAZI

FROM: BEN GHAFGHAZI

FILE: **E.A.** 04 - 0120L4
CO-RTE-PM ALA-80-1.6/2.7
FED. NO. NO FED AID

CCO#: **123** SUPPLEMENT#: **1** Category Code: **AFZZ**

CONTINGENCY BALANCE (incl. this change) **$2,146,116.40**

COST: **$0.00** INCREASE ☐ DECREASE ☐

HEADQUARTERS APPROVAL REQUIRED? ☐ YES ☑ NO

SUPPLEMENTAL FUNDS PROVIDED: **$0.00**

IS THIS REQUEST IN ACCORDANCE WITH ENVIRONMENTAL DOCUMENTS? ☑ YES ☐ NO

CCO DESCRIPTION:
Time Adjustment of 0 Days.

PROJECT DESCRIPTION:
Construct bridge, roadway, building and electrical system.

Original Contract Time:	Time Adj. This Change:	Previously Approved CCO Time Adjustments:	Percentage Time Adjusted: (including this change)	Total # of Unreconciled Deferred Time CCO(s): (including this change)
810 Day(s)	**0** Day(s)	**184** Day(s)	**23** %	**8**

THIS CHANGE ORDER PROVIDES FOR:
A time adjustment of 0 (zero) working days, in accordance with Section 8-1.07, "Liquidated Damages", of the Standard Specifications.

It has been determined that the work of Contract Change Order No. 123 has had no impact on the contractor's controlling operation. Therefore, a time extension of 0 days is recommended.

Total Time Adjustment = 0 Days

CONCURRED BY:

Construction Engineer:	Ben Ghafghazi	Date 4/7/2010
Bridge Engineer:		Date
Project Engineer:		Date
Project Manager:		Date
FHWA Rep.:		Date
Environmental:		Date
Other (specify):		Date
Other (specify):		Date
District Prior Approval By:		Date
HQ (Issue Approve) By:		Date
Resident Engineer's Signature:		Date 4/7/2010

ESTIMATE OF COST

	THIS REQUEST	TOTAL TO DATE
ITEMS	$0.00	$0.00
FORCE ACCOUNT	$0.00	$0.00
AGREED PRICE	$0.00	$125,418.00
ADJUSTMENT	$0.00	$0.00
TOTAL	$0.00	$125,418.00

FEDERAL PARTICIPATION

☐ PARTICIPATING ☐ PARTICIPATING IN PART ☑ NONE
☐ NON-PARTICIPATING (MAINTENANCE) ☐ NON-PARTICIPATING

FEDERAL SEGREGATION (if more than one Funding Source or P.I.P. type)
☑ CCO FUNDED PER CONTRACT ☐ CCO FUNDED AS FOLLOWS

FEDERAL FUNDING SOURCE PERCENT

ADA Notice: For individuals with sensory disabilities, this document is available in alternate formats. For information call: (916) 654-6410 or TDD (916) 654-3880 or write Records and Forms Management, 1120 N Street, MS-89, Sacramento, CA 95814.

STATE OF CALIFORNIA - DEPARTMENT OF TRANSPORTATION

CONTRACT CHANGE ORDER

Change Requested by: Engineer

CCO 124	Suppl. No. 0	Contract No. 04 - 0120L4	Road ALA-80-1.6/2.7	FED. AID LOC.: NO FED AID

To: **M C M CONSTRUCTION INC**

You are directed to make the following changes from the plans and specifications or do the following described work not included in the plans and specifications for this contract. ***NOTE: This change order is not effective until approved by the Engineer.***

Description of work to be done, estimate of quantities and prices to be paid. (Segregate between additional work at contract price, agreed price and force account.) Unless otherwise stated, rates for rental of equipment cover only such time as equipment is actually used and no allowance will be made for idle time. This last percentage shown is the net accumulated increase or decrease from the original quantity in the Engineer's Estimate.

Extra Work at Lump Sum:

Provide labor, equipment, and materials necessary to construct temporary paved access to and from Maintenance Road from EB 80 during the Labor Day 2009 weekend work. Access shall be provided from just east of the Mole Substation and at the east conform between the MRDTR Line and existing Maintenance Road. Exact locations will be laid out in the field.

Provide temporary k-rail and PCMS to direct traffic as determined necessary by the Engineer.

Extra Work at Agreed Lump Sum $31,596.16

Estimated Cost: **Increase** ☑ **Decrease** ☐ **$31,596.16**

By reason of this order the time of completion will be adjusted as follows: 0 days

Signature	**Resident Engineer** BEN GHAFGHAZI	**Date** 10/27/09
Signature	**Construction Engineer** Ben Ghafghazi	**Date** 10/27/09
Signature	**Construction Engineer** Ben Ghafghazi	**Date** 12/3/09

We the undersigned contractor, have given careful consideration to the change proposed and agree, if this proposal is approved, that we will provide all equipment, furnish the materials, except as may otherwise be noted above, and perform all services necessary for the work above specified, and will accept as full payment therefor the prices shown above.

NOTE: If you, the contractor, do not sign acceptance of this order, your attention is directed to the requirements of the specifications as to proceeding with the ordered work and filing a written protest within the time therein specified.

Signature	**(Print name and title)** EDMUNDO A. PUCHI, TREASURER	**Date** 11/9/09

STATE OF CALIFORNIA - DEPARTMENT OF TRANSPORTATION

CONTRACT CHANGE ORDER MEMORANDUM

TO: AMER BATA / BEN GHAFGHAZI

FROM: BEN GHAFGHAZI

FILE: E.A. 04 - 0120L4
CO-RTE-PM ALA-80-1.6/2.7
FED. NO. NO FED AID

CCO#: 124 | SUPPLEMENT#: 0 | Category Code: CJTJ

CONTINGENCY BALANCE (incl. this change) $3,783,698.40

COST: $31,596.16 INCREASE ☑ DECREASE ☐

HEADQUARTERS APPROVAL REQUIRED? ☐ YES ☑ NO

SUPPLEMENTAL FUNDS PROVIDED: $0.00

IS THIS REQUEST IN ACCORDANCE WITH ENVIRONMENTAL DOCUMENTS? ☑ YES ☐ NO

CCO DESCRIPTION:
Access to lower deck on Labor Day.

PROJECT DESCRIPTION:
Construct bridge, roadway, building and electrical system.

Original Contract Time:	Time Adj. This Change:	Previously Approved CCO Time Adjustments:	Percentage Time Adjusted: (including this change)	Total # of Unreconciled Deferred Time CCO(s): (including this change)
810 Day(s)	0 Day(s)	184 Day(s)	23 %	13

THIS CHANGE ORDER PROVIDES FOR:

Constructing temporary paved access to and from Maintenance Road from EB 80 during the Labor Day 2009 weekend work. Providing temporary traffic control devices during Labor Day 2009 closure as determined necessary by the Engineer.

This change is necessary to provide unobstructed access to the lower deck of the SFOBB for all contractors and Caltrans personnel that must work on the lower deck during the Labor Day 2009 closure. There will be various activities ongoing on EB 80 that will affect the access during this weekend, including trenching across the roadway to install a duct bank. Temporary traffic control devices will be placed as necessary to direct construction traffic through work zone.

This work will be paid as Extra Work at Agreed Lump Sum for $31,596.16, which can be financed from the contingency fund.

Design and Maintenance concurrence is not necessary since this is temporary work.

No adjustment of contract time is warranted since this change does not affect the controlling operation.

CONCURRED BY:

Construction Engineer:	Ben Ghafghazi	Date 10/27/09
Bridge Engineer:		Date
Project Engineer:		Date
Project Manager:		Date
FHWA Rep.:		Date
Environmental:		Date
Other (specify):		Date
Other (specify):		Date
District Prior Approval By:		Date
HQ (Issue Approve) By:		Date
Resident Engineer's Signature:		Date 10/27/09

ESTIMATE OF COST

	THIS REQUEST	TOTAL TO DATE
ITEMS	$0.00	$0.00
FORCE ACCOUNT	$0.00	$0.00
AGREED PRICE	$31,596.16	$31,596.16
ADJUSTMENT	$0.00	$0.00
TOTAL	$31,596.16	$31,596.16

FEDERAL PARTICIPATION

☐ PARTICIPATING ☐ PARTICIPATING IN PART ☑ NONE
☐ NON-PARTICIPATING (MAINTENANCE) ☐ NON-PARTICIPATING

FEDERAL SEGREGATION (if more than one Funding Source or P.I.P. type)
☑ CCO FUNDED PER CONTRACT ☐ CCO FUNDED AS FOLLOWS

FEDERAL FUNDING SOURCE	PERCENT

ADA Notice: For individuals with sensory disabilities, this document is available in alternate formats. For information call: (916) 654-6410 or TDD (916) 654-3880 or write Records and Forms Management, 1120 N Street, MS-89, Sacramento, CA 95814.

C.C. R. McCall

STATE OF CALIFORNIA - DEPARTMENT OF TRANSPORTATION

CONTRACT CHANGE ORDER

Change Requested by: Engineer

CCO 125	Suppl. No. 0	Contract No. 04 - 0120L4	Road ALA-80-1.6/2.7	FED. AID LOC.: NO FED AID

To: **M C M CONSTRUCTION INC**

You are directed to make the following changes from the plans and specifications or do the following described work not included in the plans and specifications for this contract. ***NOTE: This change order is not effective until approved by the Engineer.***

Description of work to be done, estimate of quantities and prices to be paid. (Segregate between additional work at contract price, agreed price and force account.) Unless otherwise stated, rates for rental of equipment cover only such time as equipment is actually used and no allowance will be made for idle time. This last percentage shown is the net accumulated increase or decrease from the original quantity in the Engineer's Estimate.

Eliminate Item No. 144, "Jacked 915 mm Welded Steel Pipe" shown on sheet UD-2 of the contract plans. Construct three concrete duct banks in lieu of the jacked pipes at the same location. This work shall be performed during the Labor Day 2009 closure of SFOBB.

Estimate of Decrease in Contract Item at Contract Price:

Item No. 144: JACKED 915 MM WELDED STEEL PIPE

-69 M (-100.00%) $2,500.00 /M = –$172,500.00 (–100.00%)

Total credit for Decrease in Contract Item.....($172,500.00)

In accordance with Section 4-1.03B(3), "Eliminated Items," of the Standard Specifications, the adjustment due to the elimination the items listed above is zero.

Extra Work at Lump Sum:

Provide labor, equipment, and materials necessary to install three concrete duct banks across existing eastbound 80 by trenching, placing conduit, backfilling with rapid setting concrete, and placing 100 mm asphalt concrete. Work is as follows:

1) Layout and saw cut existing AC pavement.
2) Trench across roadway. Remove portion of existing concrete barrier on north side of roadway.
3) Install pre-assembled conduit packs.
4) Install bulkheads.
5) Place rapid setting concrete around conduit packs.
6) Cure rapid setting concrete.
7) Place 100 mm asphalt concrete.
8) Replace stripe and barrier rail. Restore roadway to its original condition.

For this work, the contractor will be paid the sum of $157,500.00. This sum constitutes full compensation, including markups, for this change.

Extra Work at Agreed Lump Sum $157,500.00

CONTRACT CHANGE ORDER

Change Requested by: Engineer

CCO 125	Suppl. No. 0	Contract No. 04 - 0120L4	Road ALA-80-1.6/2.7	FED. AID LOC.: NO FED AID

Estimated Cost: **Increase** ☐ **Decrease** ☑ **($15,000.00)**

By reason of this order the time of completion will be adjusted as follows: 0 days

Signature	**Resident Engineer** BEN GHAFGHAZI	**Date** 9/11/09
Signature	**Construction Manager** Amer Bata	**Date** 9/11/09
Signature	**Construction Manager** Amer Bata	**Date** 3/16/10

We the undersigned contractor, have given careful consideration to the change proposed and agree, if this proposal is approved, that we will provide all equipment, furnish the materials, except as may otherwise be noted above, and perform all services necessary for the work above specified, and will accept as full payment therefor the prices shown above.

NOTE: If you, the contractor, do not sign acceptance of this order, your attention is directed to the requirements of the specifications as to proceeding with the ordered work and filing a written protest within the time therein specified.

Signature	**(Print name and title)** EDMUNDO A. PUCHI, TREASURER	**Date** 2/25/10

STATE OF CALIFORNIA - DEPARTMENT OF TRANSPORTATION

CONTRACT CHANGE ORDER MEMORANDUM

DATE: 8/26/2009 Page 1 of 1

TO: AMER BATA / BEN GHAFGHAZI

FROM: BEN GHAFGHAZI

FILE: E.A. 04 - 0120L4
CO-RTE-PM ALA-80-1.6/2.7
FED. NO. NO FED AID

CCO#: 125 SUPPLEMENT#: 0 Category Code: CXPV

CONTINGENCY BALANCE (incl. this change) $4,732,852.40

COST: ($15,000.00) INCREASE ☐ DECREASE ☑

HEADQUARTERS APPROVAL REQUIRED? ☑ YES ☐ NO

SUPPLEMENTAL FUNDS PROVIDED: $0.00

IS THIS REQUEST IN ACCORDANCE WITH ENVIRONMENTAL DOCUMENTS? ☑ YES ☐ NO

CCO DESCRIPTION:
Concrete duct bank in lieu of WSP.

PROJECT DESCRIPTION:
Construct bridge, roadway, building and electrical system.

Original Contract Time:	Time Adj. This Change:	Previously Approved CCO Time Adjustments:	Percentage Time Adjusted: (including this change)	Total # of Unreconciled Deferred Time CCO(s): (including this change)
810 Day(s)	0 Day(s)	184 Day(s)	23 %	11

THIS CHANGE ORDER PROVIDES FOR:

Installing three duct banks under existing eastbound route 80 by trenching, backfilling with rapid setting concrete, and resurfacing with 100 mm of asphalt concrete, in lieu of jacking and boring three 915mm welded steel casings per the original plans.

Contract plan sheets U3, UD-2, and UD-7 show welded steel pipe duct banks to be placed across existing eastbound 80 by jack and bore method as specified in Section 10-1.82, "Jack and Bore Welded Steel Pipe," of the Special Provisions. To reduce risks this operation will be modified to trenching across the roadway and placing a concrete duct bank. This change will alleviate any issues regarding buried obstructions that may be encountered during the jack and bore operation. Furthermore, this work will be performed during the Labor Day 2009 closure of SFOBB, which will expedite the operation and avoid any inconvenience to the public.

This work will be paid as an elimination of Item No. 144, "Jacked 915 mm Welded Steel Pipe" for a credit of $172,500.00, and Extra Work at Agreed Lump Sum for $157,500.00. Net amount of this CCO is a credit of $15,000.00, which will be returned to the contingency fund. A detailed cost analysis has been performed and is on file at the Resident Engineer's office.

This change has been discussed and concurred with Jaime Gutierrez, Project Development; Patrick Treacy, HQ Construction Coordinator; Mike Forner, SFOBB Construction Manager; and Ken Terpstra, Project Manager. An Issue and Approve was granted by Headquarters on September 1, 2009.

No adjustment of contract time is warranted since this change does not affect the controlling operation.

CONCURRED BY:

Construction Engineer:	Ben Ghafghazi	Date	8/31/09
Bridge Engineer:		Date	
Project Engineer:	Jaime Gutierrez	Date	8/25/09
Project Manager:	Ken Terprstra	Date	8/31/09
FHWA Rep.:		Date	
Environmental:		Date	
Other (specify):	Patrick Treacy, HQ Const. Coord.	Date	8/30/09
Other (specify):		Date	
District Prior Approval By:	Mike Forner, Principal TE	Date	8/31/09
HQ (Issue Approve) By:	Bob Molera	Date	9/1/09
Resident Engineer's Signature:		Date	9/1/09

ESTIMATE OF COST

	THIS REQUEST	TOTAL TO DATE
ITEMS	($172,500.00)	($172,500.00)
FORCE ACCOUNT	$0.00	$0.00
AGREED PRICE	$157,500.00	$157,500.00
ADJUSTMENT	$0.00	$0.00
TOTAL	($15,000.00)	($15,000.00)

FEDERAL PARTICIPATION

☐ PARTICIPATING ☐ PARTICIPATING IN PART ☑ NONE
☐ NON-PARTICIPATING (MAINTENANCE) ☐ NON-PARTICIPATING

FEDERAL SEGREGATION (if more than one Funding Source or P.I.P. type)
☑ CCO FUNDED PER CONTRACT ☐ CCO FUNDED AS FOLLOWS

FEDERAL FUNDING SOURCE	PERCENT

ADA Notice: For individuals with sensory disabilities, this document is available in alternate formats. For information call: (916) 654-6410 or TDD (916) 654-3880 or write Records and Forms Management, 1120 N Street, MS-89, Sacramento, CA 95814.

CONTRACT CHANGE ORDER

Change Requested by: Engineer

CCO: 126	Suppl. No. 0	Contract No. 04 - 0120L4	Road ALA-80-1.6/2.7	FED. AID LOC.: NO FED AID

M C M CONSTRUCTION INC

You are directed to make the following changes from the plans and specifications or do the following described work not included in the plans and specifications for this contract. ***NOTE: This change order is not effective until approved by the Engineer.***

Description of work to be done, estimate of quantities and prices to be paid. (Segregate between additional work at contract price, agreed price and force account.) Unless otherwise stated, rates for rental of equipment cover only such time as equipment is actually used and no allowance will be made for idle time. This last percentage shown is the net accumulated increase or decrease from the original quantity in the Engineer's Estimate.

Provide labor, equipment and material for the following Labor Day 2009 activities.

Extra Work at Lump Sum:

Install k-rail and crash cushion array U14 as shown on sheets 2 of 3 and 3 of 3 of this CCO. Install Qwick Kurb channelizer per the alignment shown on sheet 3 of 3 of this CCO. This work shall be in accordance with Sections 10-1.97, "Qwick Kurb Channelizer," 10-1.101, "Concrete Barrier (Type K)," and 10-1.101, "Crash Cushion, Sand Filled," of the Special Provisions.

Backfill MBGR postholes with slurry and AC after removal of temporary MBGR from W 88+80 to W 89+30, and from W 93+13 to 93+80. Exact locations will be laid out in the field.

Provide flaggers for construction activity.

Compensate contractor for crew standby time for westbound work activities on Labor Day 2009.

For this work, the contractor will be paid the sum of $86,800.00. This sum constitutes full compensation, including markups, for this change.

Extra Work at Agreed Lump Sum $86,800.00

Estimated Cost: Increase ☑ Decrease ☐ **$86,800.00**

By reason of this order the time of completion will be adjusted as follows: 0 days

Submitted by

Signature	Resident Engineer BEN GHAFGHAZI	Date 11/24/09

Approval Recommended by

Signature	Construction Engineer Ben Ghafghazi	Date 11/24/09

Engineer Approval by

Signature	Construction Manager Amer Bata	Date 12/28/09

We the undersigned contractor, have given careful consideration to the change proposed and agree, if this proposal is approved, that we will provide all equipn furnish the materials, except as may otherwise be noted above, and perform all services necessary for the work above specified, and will accept as full paymer therefor the prices shown above.

NOTE: If you, the contractor, do not sign acceptance of this order, your attention is directed to the requirements of the specifications as to proceeding with the ordered work and filing a written protest within the time therein specified.

Contractor Acceptance by

Signature	(Print name and title) Edmundo A. Pucki - Treasurer	Date 12-21-2009

DIST	COUNTY	ROUTE	KILOMETER POST TOTAL PROJECT	SHEET NO	TOTAL SHEETS
04	Ala	80	1.6/2.7	86R2	643

REGISTERED CIVIL ENGINEER 8-29-06

1-29-07
PLANS APPROVAL DATE

REGISTERED PROFESSIONAL ENGINEER A.G. Ureta No. 67663 Exp. 6-30-07 CIVIL STATE OF CALIFORNIA

The State of California or its officers or agents shall not be responsible for the accuracy or completeness of electronic copies of this plan sheet.

To get to the Caltrans web site, go to: http://www.dot.ca.gov

Caltrans Metric

CONTRACT CHANGE ORDER NO. 126
SHEET 3 OF 3 9/3/09

MARK	DATE	DESCRIPTIONS	REV	CK	CCO No.
1	7/23/09	ADDED CONCRETE BARRIER, CRASH CUSHION, AND NOTE.	RR	JG	
2	8/27/09	CHANGED OWICK KURB LOCATION AND ADDED DETAIL	RR	JG	

REVISIONS

Note:
1. For typical opening through Owick Kurb Channelizer System See Detail A
2. FIRST AND LAST Conc BARRIER (TYPE K) SHALL BE DOWELLED. SEE DOWELING DETAIL ON SHEET PD-2.

REGISTERED CIVIL ENGINEER 8-27-09

REGISTERED PROFESSIONAL ENGINEER Rafael A. Rovelo No. 68941 Exp. 12-31-09 CIVIL STATE OF CALIFORNIA

STAMP IS VALID FOR REVISIONS 1 2 ONLY

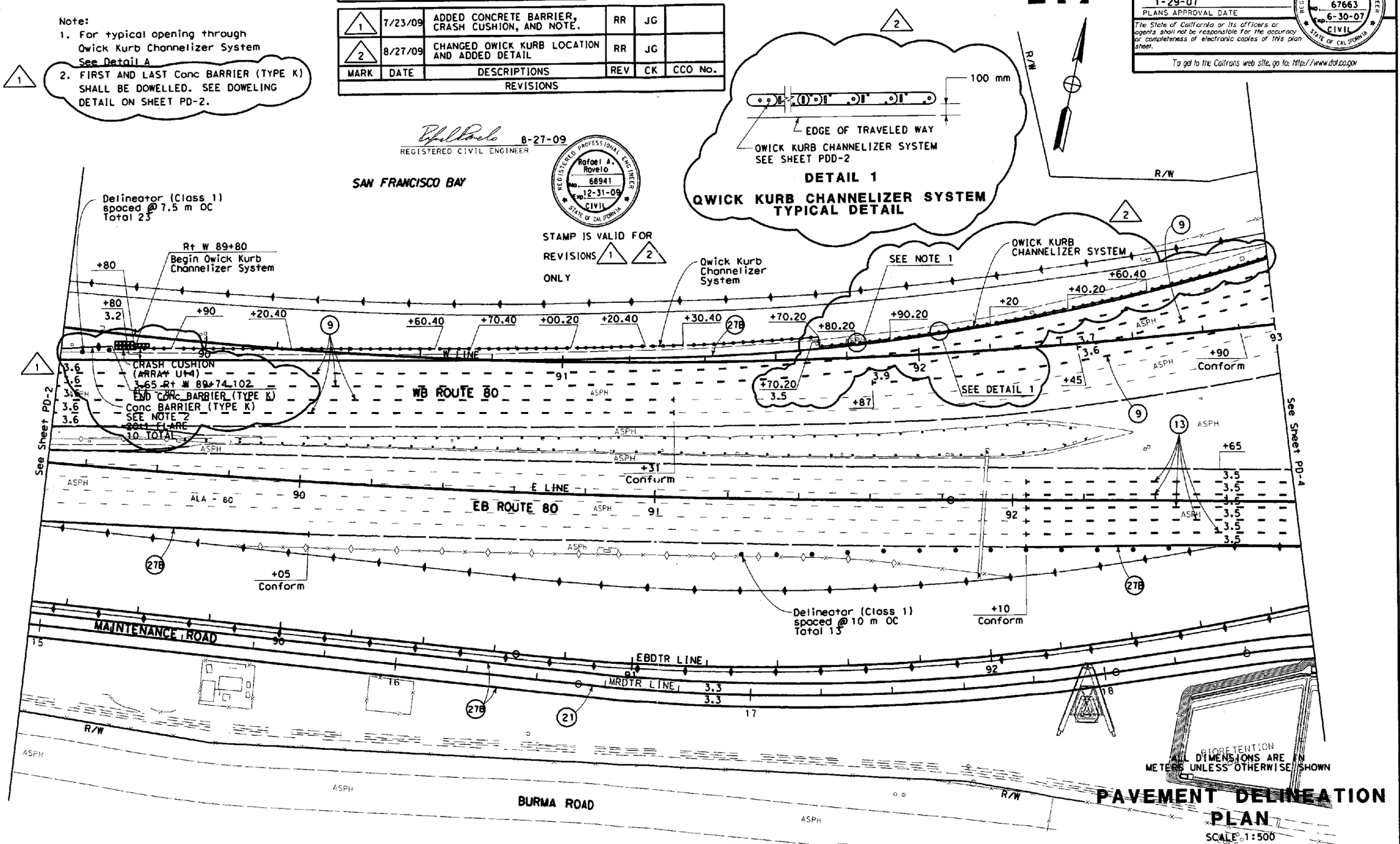

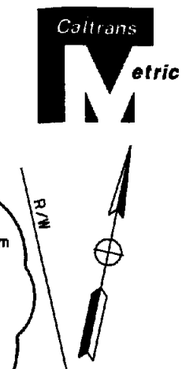

DETAIL 1
OWICK KURB CHANNELIZER SYSTEM TYPICAL DETAIL

PAVEMENT DELINEATION PLAN
SCALE: 1:500

FOR NOTES, ABBREVIATIONS &/OR LEGEND, SEE SHEET PD-1

THIS PLAN ACCURATE FOR PAVEMENT DELINEATION ONLY

PD-3

FOR REDUCED PLANS ORIGINAL SCALE IS IN MILLIMETERS 0 20 40 60 80

USERNAME => $(USER)
DGN FILE => ...\40120lna003 Rev7.dgn

CU 04251

EA 0120L1

LAST REVISION 08-22-06
DATE PLOTTED => 8/31/2009
TIME PLOTTED => 5:03:20 PM

STATE OF CALIFORNIA - DEPARTMENT OF TRANSPORTATION
Caltrans
TOLL BRIDGE

PROJECT ENGINEER J. E. GUTIERREZ

CALCULATED/DESIGNED BY
CHECKED BY
DATE REVISED BY
DATE REVISED

STATE OF CALIFORNIA - DEPARTMENT OF TRANSPORTATION

CONTRACT CHANGE ORDER MEMORANDUM

DATE: 9/2/2009 Page 1 of 1

TO: AMER BATA / BEN GHAFGHAZI

FROM: BEN GHAFGHAZI

FILE: **E.A.** 04 - 0120L4
CO-RTE-PM ALA-80-1.6/2.7
FED. NO. NO FED AID

CCO#: **126** SUPPLEMENT#: **0** Category Code: **CKPJ**

CONTINGENCY BALANCE (incl. this change) **$4,646,552.40**

COST: **$86,800.00** INCREASE ☑ DECREASE ☐

HEADQUARTERS APPROVAL REQUIRED? ☐ YES ☑ NO

SUPPLEMENTAL FUNDS PROVIDED: **$0.00**

IS THIS REQUEST IN ACCORDANCE WITH ENVIRONMENTAL DOCUMENTS? ☑ YES ☐ NO

CCO DESCRIPTION:
Add k-rail at CMS, move Quick Curb.

PROJECT DESCRIPTION:
Construct bridge, roadway, building and electrical system.

Original Contract Time:	Time Adj. This Change:	Previously Approved CCO Time Adjustments:	Percentage Time Adjusted: (including this change)	Total # of Unreconciled Deferred Time CCO(s): (including this change)
810 Day(s)	0 Day(s)	184 Day(s)	23 %	11

THIS CHANGE ORDER PROVIDES FOR:
Performing the following on Labor Day 2009: Install k-rail and crash cushion array U14 as shown on sheets 2 of 3 and 3 of 3 of the CCO. Installing Qwick Kurb channelizer per the alignment shown on sheet 3 of 3 of the CCO. Backfill MBGR postholes with slurry and AC after removal of temporary MBGR from W 88+80 to W 89+30, and from W 93+13 to 93+80. Provide flaggers for construction activity. Provide compensation for standby time for westbound work activities on Labor Day 2009.

This change is necessary for traffic safety reasons. The existing CMS in the westbound direction was protected by k-rail and crash cushions. The plans call for removal of the k-rail and crash cushions in order to construct the new WB roadway. The plans do not include installing k-rail at the CMS. Since the CMS will stay in the same location it will require protection. The Qwick Kurb channelizer alignment is being revised create a merge area for construction vehicles to enter the WB roadway. Although the new WB roadway is closed to public traffic it will be used by construction traffic for ongoing and future SFOBB contracts. The merge area will allow vehicles to enter the roadway at a safer speed by providing an opportunity to accelerate before merging. The MBGR postholes must be filled to prevent an obstruction in the shoulder. The plans do not call out backfilling the postholes. Additional flaggers are needed to direct construction traffic though the work area. The contractor will also be compensated for anticipated standby time due to the amount of work being performed on Labor Day weekend. There will be many activities being performed in a limited area and within a limited time frame. This necessitates having crews on standby in order to start their operations without delay.

These changes have been requested by Jaime Gutierrez of Project Development (memos attached). The changes have been discussed and concurred with Shi Lam and Roland Au-Yeung of Traffic Safety. Maintenance concurrence is not required since installing the k-rail and crash cushion return the roadway back to the existing condition, and the Qwick Kurb channelizer is only a change in layout.

No adjustment of contract time is warranted since this change does not affect the controlling operation.

CONCURRED BY:

Construction Engineer:	Ben Ghafghazi	Date 9/3/09
Bridge Engineer:		Date
Project Engineer:	Jaime Gutierrez	Date 8/31/09
Project Manager:		Date
FHWA Rep.:		Date
Environmental:		Date
Other (specify):	Shi Lam, Traffic Safety	Date 7/23/09
Other (specify):	Roland Au-Yeung, Traffic Safety	Date 8/31/09
District Prior Approval By:		Date
HQ (Issue Approve) By:		Date
Resident Engineer's Signature:		Date 9/3/09

ESTIMATE OF COST

	THIS REQUEST	TOTAL TO DATE
ITEMS	$0.00	$0.00
FORCE ACCOUNT	$0.00	$0.00
AGREED PRICE	$86,800.00	$86,800.00
ADJUSTMENT	$0.00	$0.00
TOTAL	$86,800.00	$86,800.00

FEDERAL PARTICIPATION

☐ PARTICIPATING ☐ PARTICIPATING IN PART ☑ NONE
☐ NON-PARTICIPATING (MAINTENANCE) ☐ NON-PARTICIPATING

FEDERAL SEGREGATION (if more than one Funding Source or P.I.P. type)
☑ CCO FUNDED PER CONTRACT ☐ CCO FUNDED AS FOLLOWS

FEDERAL FUNDING SOURCE	PERCENT

ADA Notice: For individuals with sensory disabilities, this document is available in alternate formats. For information call: (916) 654-6410 or TDD (916) 654-3880 or write Records and Forms Management, 1120 N Street, MS-89, Sacramento, CA 95814.

STATE OF CALIFORNIA - DEPARTMENT OF TRANSPORTATION

CONTRACT CHANGE ORDER

Change Requested by: Engineer

CCO 127	Suppl. No. 0	Contract No. 04 - 0120L4	Road ALA-80-1.6/2.7	FED. AID LOC.: NO FED AID

M C M CONSTRUCTION INC

You are directed to make the following changes from the plans and specifications or do the following described work not included in the plans and specifications for this contract. ***NOTE: This change order is not effective until approved by the Engineer.***

Description of work to be done, estimate of quantities and prices to be paid. (Segregate between additional work at contract price, agreed price and force account.) Unless otherwise stated, rates for rental of equipment cover only such time as equipment is actually used and no allowance will be made for idle time. This last percentage shown is the net accumulated increase or decrease from the original quantity in the Engineer's Estimate.

Extra Work at Lump Sum:

Provide labor, equipment, and materials to dig out and replace 50 mm Asphalt Concrete (Type A) on eastbound 80 between east end of the SFOBB and toll plaza. Exact locations shall be determined in the field by the Engineer. The quantity of Asphalt Concrete to be replaced is 600 Tonn. This work shall be performed during the Labor Day 2009 closure of SFOBB.

For this work, the contractor will be paid the sum of $133,410.00. This sum constitutes full compensation, including markups, for this change.

Extra Work at Agreed Lump Sum $133,410.00

This price above does not include replacing striping removed during this operation. The cost of striping shall be addressed in a supplemental CCO.

Estimated Cost: Increase ☑ **Decrease** ☐ **$133,410.00**

By reason of this order the time of completion will be adjusted as follows: 0 days

Signature	**Resident Engineer** BEN GHAFGHAZI	**Date** 11/24/09
Signature	**Construction Engineer** Ben Ghafghazi	**Date** 11/24/09
Signature	**Construction Manager** Amer Bata	**Date** 3/15/10

We the undersigned contractor, have given careful consideration to the change proposed and agree, if this proposal is approved, that we will provide all equipment, furnish the materials, except as may otherwise be noted above, and perform all services necessary for the work above specified, and will accept as full payment therefor the prices shown above.

NOTE: If you, the contractor, do not sign acceptance of this order, your attention is directed to the requirements of the specifications as to proceeding with the ordered work and filing a written protest within the time therein specified.

Signature	**(Print name and title)** EDMUND A. PUCHI, TREASURER	**Date** 3/4/10

STATE OF CALIFORNIA - DEPARTMENT OF TRANSPORTATION

CONTRACT CHANGE ORDER MEMORANDUM

DATE: 10/5/2009 Page 1 of 1

TO: AMER BATA / BEN GHAFGHAZI

FROM: BEN GHAFGHAZI

FILE: **E.A.** 04 - 0120L4
CO-RTE-PM ALA-80-1.6/2.7
FED. NO. NO FED AID

CCO#: **127** | SUPPLEMENT#: **0** | Category Code: **CJPJ** | CONTINGENCY BALANCE (incl. this change) **$3,494,354.40**

COST: **$133,410.00** INCREASE ☑ DECREASE ☐ HEADQUARTERS APPROVAL REQUIRED? ☐ YES ☑ NO

SUPPLEMENTAL FUNDS PROVIDED: **$0.00** IS THIS REQUEST IN ACCORDANCE WITH ENVIRONMENTAL DOCUMENTS? ☑ YES ☐ NO

CCO DESCRIPTION:
AC repair EB 80.

PROJECT DESCRIPTION:
Construct bridge, roadway, building and electrical system.

Original Contract Time:	Time Adj. This Change:	Previously Approved CCO Time Adjustments:	Percentage Time Adjusted: (including this change)	Total # of Unreconciled Deferred Time CCO(s): (including this change)
810 Day(s)	**0** Day(s)	**184** Day(s)	**23** %	**13**

THIS CHANGE ORDER PROVIDES FOR:
Performing dig out and replacement of 50 mm Asphalt Concrete (Type A) on EB 80 between east end of the SFOBB and SFOBB Toll Plaza. Exact limits for this work will be laid out in the field. The quantity of Asphalt Concrete to be replaced is 600 Tonn. This work shall be performed during the Labor Day 2009 closure of SFOBB.

This change is necessary to replace areas of failed pavement on EB 80. The failed pavement was identified during the 2009 Labor Day closure of the SFOBB. Maintenance requested that the failed areas be repaired. Construction Management agreed as this was an opportunity to take advantage of the bridge closure to perform the work.

This work will be paid as Extra Work at Agreed Lump Sum of $133,410.00, which can be financed from the contingency fund. This sum constitutes full compensation, including markups, for this change. A detailed cost analysis is on file in the Resident Engineer's office. This price does not include the cost replacing striping removed during this operation. The cost of striping shall be addressed in a supplemental CCO.

This change has been discussed and concurred with Peter Cortopassi, Toll Bridge Maintenance Manager, and Mike Forner, SFOBB Construction Manager. This change has also been concurred with Jaime Gutierrez of Project Development.

No adjustment of contract time is warranted since this change does not affect the controlling operation.

CONCURRED BY:

Construction Engineer:	Ben Ghafghazi	Date 11/24/09
Bridge Engineer:		Date
Project Engineer:	Jaime Gutierrez	Date 11/24/09
Project Manager:		Date
FHWA Rep.:		Date
Environmental:		Date
Other (specify):	Peter Cortopassi, Toll Maint. Mgr.	Date 9/7/09
Other (specify):		Date
District Prior Approval By:	Mike Forner, Principal TE	Date 9/7/09
HQ (Issue Approve) By:		Date
Resident Engineer's Signature:		Date 11/24/09

ESTIMATE OF COST

	THIS REQUEST	TOTAL TO DATE
ITEMS	$0.00	$0.00
FORCE ACCOUNT	$0.00	$0.00
AGREED PRICE	$133,410.00	$133,410.00
ADJUSTMENT	$0.00	$0.00
TOTAL	$133,410.00	$133,410.00

FEDERAL PARTICIPATION

☐ PARTICIPATING ☐ PARTICIPATING IN PART ☑ NONE
☐ NON-PARTICIPATING (MAINTENANCE) ☐ NON-PARTICIPATING

FEDERAL SEGREGATION (if more than one Funding Source or P.I.P. type)
☑ CCO FUNDED PER CONTRACT ☐ CCO FUNDED AS FOLLOWS

FEDERAL FUNDING SOURCE	PERCENT

ADA Notice: For individuals with sensory disabilities, this document is available in alternate formats. For information call: (916) 654-6410 or TDD (916) 654-3880 or write Records and Forms Management, 1120 N Street, MS-89, Sacramento, CA 95814.

STATE OF CALIFORNIA - DEPARTMENT OF TRANSPORTATION

CONTRACT CHANGE ORDER MEMORANDUM

DATE: 1/21/2010 Page 1 of 1

TO: AMER BATA / BEN GHAFGHAZI

FROM: BEN GHAFGHAZI

FILE: **E.A.** 04 - 0120L4
CO-RTE-PM ALA-80-1.6/2.7
FED. NO. NO FED AID

CCO#: **127** | SUPPLEMENT#: **1** | Category Code: **CKPL**

CONTINGENCY BALANCE (incl. this change) **$2,090,087.40**

COST: **$20,919.42** INCREASE ☑ DECREASE ☐

HEADQUARTERS APPROVAL REQUIRED? ☐ YES ☑ NO

SUPPLEMENTAL FUNDS PROVIDED: **$0.00**

IS THIS REQUEST IN ACCORDANCE WITH ENVIRONMENTAL DOCUMENTS? ☑ YES ☐ NO

CCO DESCRIPTION:
Restripe EB 80 after Labor Day AC Repair

PROJECT DESCRIPTION:
Construct bridge, roadway, building and electrical system.

Original Contract Time:	Time Adj. This Change:	Previously Approved CCO Time Adjustments:	Percentage Time Adjusted: (including this change)	Total # of Unreconciled Deferred Time CCO(s): (including this change)
810 Day(s)	**0** Day(s)	**184** Day(s)	**23** %	**8**

THIS CHANGE ORDER PROVIDES FOR:
Replacement of the removed striping on EB 80 between east end of the SFOBB and SFOBB Toll Plaza, due to the AC repair done under CCO No. 127, Supplement 0, over the 2009 Labor Day Weekend closure of the SFOBB.

Existing striping on EB 80 was removed due to the AC repair, and was restriped when paving is completed. This change is necessary because the original CCO did not include the cost for replacing the removed striping. The original CCO only provided for the repair of failed pavement.

Payment for this work will be Extra Work at Agreed Lump Sum of $20,919.42, which can be financed from the contingency fund. This sum constitutes full compensation, including markups, for this change. A detailed cost analysis has been submitted by the contractor, and was verified as reasonable by the Engineer. The cost analysis is on file at the Resident Engineer's office.

This change has been discussed and concurred with Peter Cortopassi, Toll Bridge Maintenance Manager, Jaime Gutierrez, Project Development, Mike Forner, SFOBB Construction Manager, and Patrick Treacy, HQ Construction Coordinator.

No adjustment of contract time is warranted since this change does not affect the controlling operation.

CONCURRED BY:

Construction Engineer:	Ben Ghafghazi	Date	1/21/10
Bridge Engineer:		Date	
Project Engineer:	Jaime Gutierrez	Date	11/24/09
Project Manager:		Date	
FHWA Rep.:		Date	
Environmental:		Date	
Other (specify):	Peter Cortopassi, Toll Maint. Mgr.	Date	9/7/09
Other (specify):	Patrick Treacy, HQ Const. Coord.	Date	
District Prior Approval By:	Mike Forner, Principal TE	Date	9/7/09
HQ (Issue Approve) By:		Date	
Resident Engineer's Signature:		Date	5/25/2010

ESTIMATE OF COST

	THIS REQUEST	TOTAL TO DATE
ITEMS	$0.00	$0.00
FORCE ACCOUNT	$0.00	$0.00
AGREED PRICE	$20,919.42	$154,329.42
ADJUSTMENT	$0.00	$0.00
TOTAL	$20,919.42	$154,329.42

FEDERAL PARTICIPATION

☐ PARTICIPATING ☐ PARTICIPATING IN PART ☑ NONE
☐ NON-PARTICIPATING (MAINTENANCE) ☐ NON-PARTICIPATING

FEDERAL SEGREGATION (if more than one Funding Source or P.I.P. type)
☑ CCO FUNDED PER CONTRACT ☐ CCO FUNDED AS FOLLOWS

FEDERAL FUNDING SOURCE	PERCENT

ADA Notice: For individuals with sensory disabilities, this document is available in alternate formats. For information call: (916) 654-6410 or TDD (916) 654-3880 or write Records and Forms Management, 1120 N Street, MS-89, Sacramento, CA 95814.

CONTRACT CHANGE ORDER

Change Requested by:

CCO: 127	Suppl. No. 1	Contract No. 04 - 0120L4	Road ALA-80-1.6/2.7	FED. AID LOC.: NO FED AID

To: **M C M CONSTRUCTION INC**

You are directed to make the following changes from the plans and specifications or do the following described work not included in the plans and specifications for this contract. ***NOTE: This change order is not effective until approved by the Engineer.***

Description of work to be done, estimate of quantities and prices to be paid. (Segregate between additional work at contract price, agreed price and force account.) Unless otherwise stated, rates for rental of equipment cover only such time as equipment is actually used and no allowance will be made for idle time. This last percentage shown is the net accumulated increase or decrease from the original quantity in the Engineer's Estimate.

Extra Work at Lump Sum:

Stripe EB 80, where existing striping had been removed due to the AC repair over 2009 Labor Day Bay Bridge closure. Exact limits will be determined in the field by the Engineer. The work of this change order shall be done in accordance with Section 84 "TRAFFIC STRIPES AND PAVEMENT MARKINGS" of Standard Specifications.

Estimated cost of Extra Work at Lump Sum $20,919.42

Estimated Cost: **Increase** ☑ **Decrease** ☐ **$20,919.42**

By reason of this order the time of completion will be adjusted as follows: 0 days

Signature	**Resident Engineer** Ben Ghafghazi	**Date** 5/25/2010
Signature	**Construction Engineer** Ben Ghafghazi	**Date** 5/25/2010
Signature	**Construction Manager** Amer Bata	**Date** 6/3/10

We the undersigned contractor, have given careful consideration to the change proposed and agree, if this proposal is approved, that we will provide all equipment, furnish the materials, except as may otherwise be noted above, and perform all services necessary for the work above specified, and will accept as full payment therefor the prices shown above.

NOTE: If you, the contractor, do not sign acceptance of this order, your attention is directed to the requirements of the specifications as to proceeding with the ordered work and filing a written protest within the time therein specified.

Signature	**(Print name and title)** EDMUNDO A. PUCHI, TREASURER	**Date** 6/1/10

CONTRACT CHANGE ORDER

Change Requested by: Engineer

CCO: 128	Suppl. No. 0	Contract No. 04 - 0120L4	Road ALA-80-1.6/2.7	FED. AID LOC.: NO FED AID

To: **M C M CONSTRUCTION INC**

You are directed to make the following changes from the plans and specifications or do the following described work not included in the plans and specifications for this contract. ***NOTE: This change order is not effective until approved by the Engineer.***

Description of work to be done, estimate of quantities and prices to be paid. (Segregate between additional work at contract price, agreed price and force account.) Unless otherwise stated, rates for rental of equipment cover only such time as equipment is actually used and no allowance will be made for idle time. This last percentage shown is the net accumulated increase or decrease from the original quantity in the Engineer's Estimate.

Revise strong motion detection system as described below:

Adjustment of Compensation at Lump Sum:

Provide labor, equipment, and materials to install free field, downhole arrays and recording systems, and for annodize coating of the cabinet, at new locations as shown on sheets 2 of 25 through 25 of 25 of this CCO.

Section 10-3.01, "Description," of the Special Provisions is revised per sheet 2 of 25 of this CCO. Section 10-3.03, "Cost Break Down," of the Special Provisions is revised per sheet 3 of 25 of this CCO. Section 10-3.24, "Strong Motion Detection System," is revised per sheet 4 of 25 of this CCO.

For this work, the contractor will be paid the agreed lump sum of $106,917.00, and this sum constitutes full compensation, including markups, for this change. All work shall be performed in accordance with Sections 10-3.01, "Description," 10-3.03, "Cost Break Down," and Section 10-3.24, "Strong Motion Detection System," of the Special Provisions as modified in this CCO.

Adjustment of Compensation at Lump Sum $106,917.00

Consideration of a time adjustment will be deferred until completion of the work specified herein. Determination of a commensurate time extension will be made in accordance with Section 10-1.14, "Progress Schedule (Critical Path Method)," of the Special Provisions and Section 8-1.07, "Liquidated Damages," of the Standard Specifications.

Estimated Cost: **Increase** ☑ **Decrease** ☐ **$106,917.00**

By reason of this order the time of completion will be adjusted as follows: Deferred

Signature	**Resident Engineer** BEN GHAFGHAZI	**Date** 2/24/2010
Signature	**Construction Manager** Amer Bata	**Date** 2/28/10
Signature	**Construction Manager** Amer Bata	**Date** 3/16/10

We the undersigned contractor, have given careful consideration to the change proposed and agree, if this proposal is approved, that we will provide all equipment, furnish the materials, except as may otherwise be noted above, and perform all services necessary for the work above specified, and will accept as full payment therefor the prices shown above.

NOTE: If you, the contractor, do not sign acceptance of this order, your attention is directed to the requirements of the specifications as to proceeding with the ordered work and filing a written protest within the time therein specified.

Signature	**(Print name and title)** JAMES A. CARTER, PRESIDENT	**Date** 3/9/10

10. Breakers and relays setting.

E. SCADA Remote Terminal Unit System (see Sheets E-154 to E-169) shall include, but not be limited to the following:

1. Install SCADA panels, RTU's, SCADA communication terminal boxes and telephone terminal boxes.
2. Install and terminate cables as shown on the plans and conduit and tray schedule.
3. Provide temporary power to conduct cable and functional tests on all RTU's and communication circuits.
4. Contract fabrication and configuration of SCADA cabinets.

F. Call Box System (see Sheets E-170 to E-172) shall include, but not be limited to the following:

1. Install and terminate cables as shown on the plans and cable conduit and tray schedule.
2. Provide temporary power to conduct cable and functional tests on all circuits.

G. Strong Motion Detection System (see Sheets E-173 to E-181) shall include, but not be limited to the following:

1. Install all conduit, pull boxes, junction boxes, anchors, fittings and supports.
2. Install State-furnished seismic sensor mounting plates.
3. Provide assistance to California Geological Survey (CGS) as required to assist in the installation of the strong motion detection system.
4. Drill holes, log holes and install downhole casing along with associated electrical work.
5. Install Strong Motion Recorder Enclosure and Concrete Foundation Pad.
6. Install Seismic Sensor Cables.

H. Temporary Underground and Roadway At-Grade (see E-182 to E-203) shall include, but not be limited to the following:

1. Install above and underground conduits, anchors, inserts, fittings, underground pull boxes and supports as shown on the plans.
2. Install conduit riser for connection to 12.47 kV and 480 V overhead lines.
3. Install two wooden poles for overhead cables.
4. Install service enclosure panels and TOS control cabinets as shown on the plans.
5. Relocate, remove or abandon equipment and devices as shown on the plans.
6. Install and terminate cables as shown on the plans.
7. Install and terminate cable itemized under "Cost Break-down" elsewhere in these special provisions.
8. Install two temporary 310 W, 480 V HPS fixture on wooden poles.
9. Conduct cable test and functional test of all circuits.
10. Install and test all temporary traffic operations system equipment.
11. Install and test all State-furnished controller cabinet assemblies.

I. Traffic Operation System (see E-204 to E-205) shall include, but not be limited to, the installation of preformed loops and junction boxes. Install preformed loop cable up to associated pull box and coil cable inside.

Attention is directed to "Mole Substation Architectural," of these special provisions, regarding electrical works, which are related to the building work, and are other than the electrical works as specified in "Electrical System," of these special provisions.

10-3.02 ABBREVIATIONS

The following abbreviations are added to those listed in Section 1-1.02, "Abbreviations," of the Standard Specifications:

CONTRACT EA 04-0120L4
CCO NO. 128
SHEET 2 of 25
CONTRACTOR: MCM
RE: B. GHAFGHAZI

REGISTERED PROFESSIONAL ENGINEER
FADI WALIEDDINE
No. 11465
Exp. 12/31/2009
ELECTRICAL
STATE OF CALIFORNIA

11. Duct Banks – list each size and type.

D. Mole Substation electrical installation is shown on the plans (see E-123 to E-153) and shall include, but not be limited to the following additional items of the cost break-down:

1. Cables and cable terminations – list each size and type.
2. Termination and splice - list each size and type.
3. Conduits, conduit anchors, fittings and supports – list each size and type.
4. Cable trays – list each size and type.
5. Cable tray supports, embed strut channels, hangers and anchors – list each size and type.
6. Cable tray straps – list each size and type.
7. Fire stopping and smoke proofing – list each type.
8. Equipment grounding system – list size and type conductor.
9. Pull boxes, junction boxes and splice boxes – list each size and type.
10. 12.47 kV Unit substation – list size and type.
11. 480 V Low Voltage Control Centers– list size and type.
12. Battery charger– list size and type.
13. 125 V(dc) battery – list size and type.
14. Safety switch for battery – list size and type.
15. 125 V(dc) panel – list size and type.
16. 45 kVA lighting and 30 kVA utility transformers – list size and type.
17. Utility panel – list size and type.
18. Equipment required for functional testing – list size and type.
19. Equipment rental - list each over $500.00 – list size and type.
20. Electrical hardware – list size and type.

CONTRACT EA 04-0120L4
CCO No. 128
SHEET 3 of 25
CONTRACTOR: MCM
RE: B. GHAFGHAZI

E. SCADA Remote Terminal Unit System electrical installation is shown on the plans (see E-154 to E-169) and shall include, but not be limited to the following additional items of the cost break-down:

1. Remote Terminal Units– list size and type.
2. Telephone terminal boxes – list size and type.
3. SCADA communication terminal boxes – list size and type.
4. Telephone and SCADA cables – list each size and type.
5. Equipment required for functional testing – list size and type.
6. Equipment rental - list each over $500.00 – list size and type.
7. Termination and splice - list each size and type.

F. Call Box System electrical installation is shown on the plans (see E-170 to E-172) and shall include, but not be limited to the following additional items of the cost break-down:

1. Cable – list each size and type.
2. Termination and splice - list each size and type.
3. Equipment rental – list each over $500.00 – list size and type.

G. Strong Motion Detection System electrical installation is shown on the plans (see E-173 to E-181) and shall include, but not be limited to the following additional items of the cost break-down:

1. Conduits, seismic sensor enclosures, conduit anchors, fittings and supports – list each size and type.
2. Junction boxes and pull boxes – list each size and type.
3. Cable- list each and type.
4. Termination and splice- list each size and type.
5. Equipment Rental – list each over $500.00 - list each and type
6. Strong Motion Recorder Enclosure.

H. Temporary Underground and Roadway At-Grade electrical installation is shown on the plans (see E-182 to E-203) and shall include, but not be limited to the following additional items of the cost break-down:

1. Cable – list each size and type.
2. Termination and splice – list each size and type.
3. Conduits, risers, conduit anchors, fittings and supports – list each size and type.
4. Pull boxes and junction boxes – list each size and type.
5. Lifting devices – list size and type.
7. Equipment required for functioning testing – list size and type.

PROFESSIONAL ENGINEER
FADI WALEEDDINE
No. 1465
Exp. 12/31/2009
ELECTRICAL
REGIST. STATE OF CALIFORNIA

CONTRACT EA 04-0120L4
CCO No. 128
SHEET 4 of 25
CONTRACTOR: MCM
RE: B. GHAFGHAZI

MATERIAL

A. State-Furnished Material

The following materials will be furnished to the Contractor.

1. Seismic sensor mounting plates.
2. Down hole sensor alignment devices (Bishops Hat).

The Contractor shall notify the Engineer in writing not less than 20 working days in advance when the Contractor wants the CGS to deliver the State Furnished material to the Contractor.

REGISTERED PROFESSIONAL ENGINEER
FADI WALIEDDINE
No. 11465
Exp. 12/31/2009
ELECTRICAL
STATE OF CALIFORNIA

B. State- Furnished and Installed Material

The following materials will be furnished and installed by State (CGS) forces:

1. Down hole seismic sensors and cable to surface
2. Seismic sensors at free field
3. Seismic recorders

C. Cables and Conductors

1. **Seismic Sensor Cable:** Seismic sensor cable, SSC, shall be four twisted pairs stranded tinned copper conductors, AWG No. 22 (7 x 30 strands), insulation 0.18 mm thick, individually shielded pairs with an aluminum polyester shield and AWG No. 22 stranded tinned copper drain wire for each pair, overall nominal outside diameter of 7.6 mm or less and outer jacket of 0.23 mm thick. Cable shall be instrument cable, NEC rated CLP2 plenum cable rated for 150°degrees C. Cable shall be similar to Belden plenum cable, Catalog No. 87778 except with only four pairs and having a color code as specified below:

1st Pair	red, black
2nd Pair	white, brown
3rd Pair	blue, violet
4th Pair	yellow, orange

Seismic sensor cable shall be United Wire and Cable Co., Inc., Consolidated Wire and Cable, or equal. Cable spools shall be of sufficient length to allow cables to be installed without splices from the sensor enclosures to the recorder cabinets as shown on the plans.

2. **Telephone Cable:** Telephone cable shall be waterproof filled-sheath, ISDN rated cable with four twisted pairs, individually shielded stranded conductor, minimum AWG No. 22 tinned copper, polyethylene insulated, with a foil aluminum-polyester shield, and chrome PVC jacket rated for 300 V. Cable spools shall be of sufficient length to allow the cables to be installed without splices from telephone service point to the seismic recorders.

3. **Interconnect Cable:** Interconnect cable, IC, shall be EIA RS-485 applications cable. Plenum type, NEC rated CL2P for temperature of 150°C. Cable shall be similar to Belden cable No. 9844 but plenum rated. The cable shall have eight tinned-copper, insulated conductors (4 twisted pairs). Overall aluminum-polyester shield and 24 AWG stranded tinned copper drain wire. Overall tinned copper braid shield (90 percent coverage). Overall nominal O.D. of 8.9 mm or less, with outer jacket of 0.23 mm thick. DColor code shall be as specified below:

1st Pair	White/Blue Stripe, Blue/White Stripe
2nd Pair	White/Orange Stripe, Orange/White Stripe
3rd Pair	White/Green Stripe, Green/White Stripe
4th Pair	White/Brown Stripe, Brown/White Stripe

Interconnect cable shall be United Wire and Cable Co., Inc., Consolidated Wire and Cable, or equal.

4. **Conductors:** Conductors shall conform to "Conductors and Wiring" specified elsewhere in these special provisions.

DIST	COUNTY	ROUTE	KILOMETER POST TOTAL PROJECT	SHEET NO	TOTAL SHEETS
04	Ala	80	1.6/2.7	451 R1	643

REGISTERED ELECTRICAL ENGINEER 05/15/06 DATE

1-29-07
PLANS APPROVAL DATE

REGISTERED PROFESSIONAL ENGINEER JENS ERLINGSSON No. 8249 Exp. 9/30/08 ELECTRICAL STATE OF CALIFORNIA

PB POWER, Inc.
A Parsons Brinckerhoff Company
303 Second St., Suite 700N
San Francisco, CA 94107-1317

The State of California or its officers or agents shall not be responsible for the accuracy or completeness of electronic copies of this plan sheet.

To get to the Caltrans web site, go to: http://www.dot.ca.gov

Caltrans Metric

NOTES:

1. References:
   - For manhole plans and sections, see sheets starting at E-111.
   - For substation conduit stub-ups, see sheet AE-5.
   - For duct bank sections see sheet starting at E-102.
   - For typical manhole and duct bank details, see sheet E-119.
   - For Mole Substation equipment arrangement, see sheet E-123.
2. Contractor shall take necessary precaution to protect all fiber optic cables in Manholes 4 and 8. This shall include, but not be limited to, securing cable on the side of the manhole, isolating the cable from other media, and ensuring that the minimum bending radius is not exceeded.
3. Contractor shall verify exact location of existing gas and sewer outfall lines. For coordinates of manholes and top of duct bank, see utility plans and ductbank profile.
4. Underground conduits shall be RGS conduit.
5. For elevation of underground between manholes to Pier E22R and E22L, see sheet E-104.
6. For existing utilities, see sheets starting at E-182 and see Utility Plans.

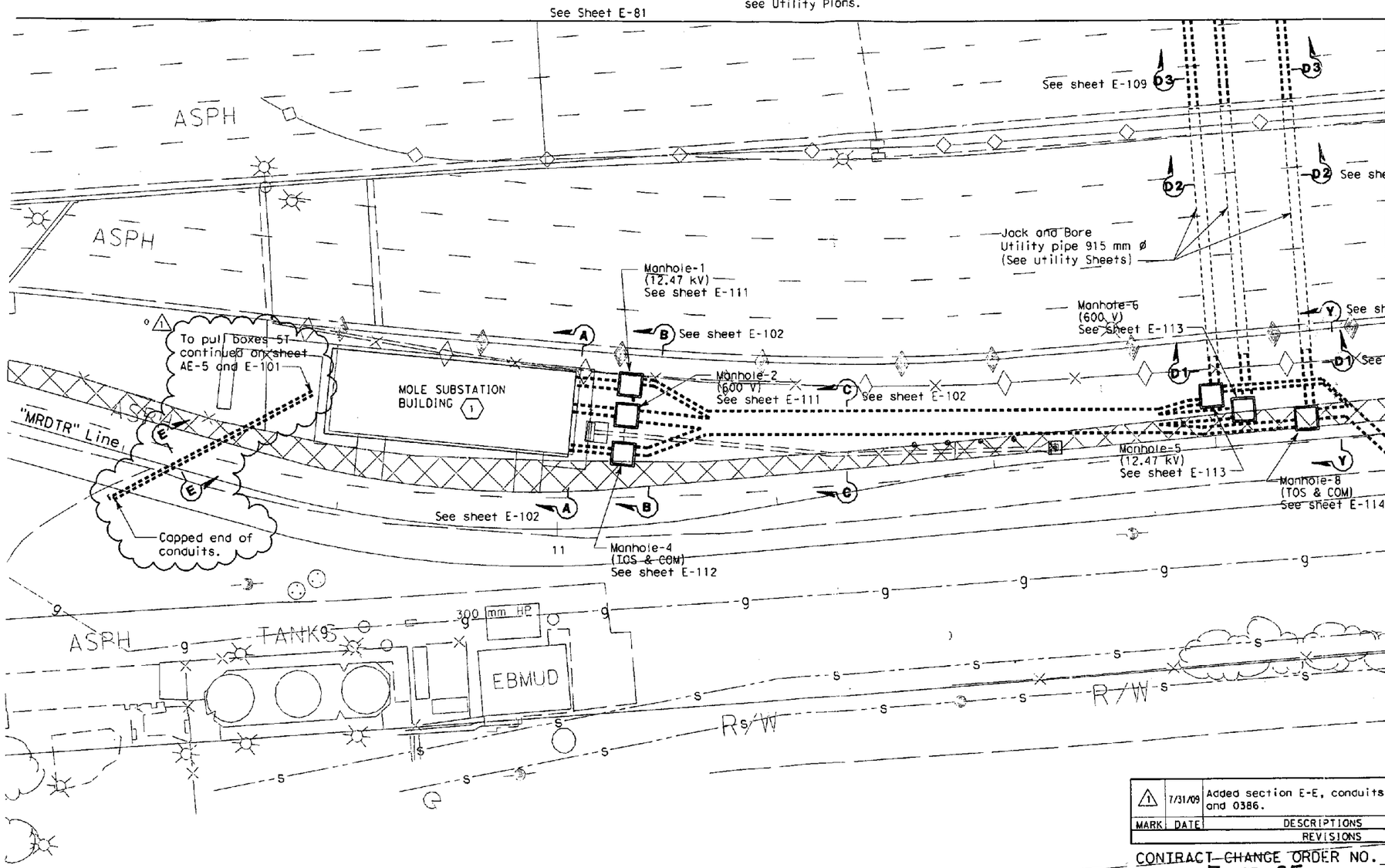

SHEET NOTES:

1. For conduits inside Mole Substation building, see sheets E-101 and E-124.

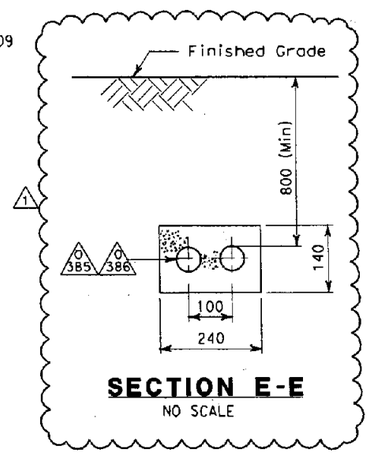

SECTION E-E
NO SCALE

REGISTERED PROFESSIONAL ENGINEER FADI WALIEDDINE No. 11465 Exp. 12/31/2009 ELECTRICAL STATE OF CALIFORNIA

MARK	DATE	DESCRIPTIONS	REV	CK	CCO NO.
1	7/31/09	Added section E-E, conduits 0385 and 0386.	RSB	EJL	Geotech Arrays

REVISIONS

CONTRACT CHANGE ORDER NO. 128
SHEET 5 OF 25

PLAN

UNDERGROUND AND ROADWAY AT-GRADE
(LIGHTING AND ELECTRICAL SYSTEMS)
SCALE: 1:200

E-80

DATE	REVISED BY	DATE	REVISED
2/06			

CALCULATED/DESIGNED BY	DATE
FK	2/06
CHECKED BY	
AB	2/06

DESIGN OVERSIGHT
BEHZAD GOLEMOHAMMADI

STATE OF CALIFORNIA - DEPARTMENT OF TRANSPORTATION
Caltrans

LAST REVISION 00-00-00
DATE PLOTTED => 8/4/2009
TIME PLOTTED => 4:17:26 PM

THIS PLAN ACCURATE FOR ELECTRICAL WORK ONLY.

ALL DIMENSIONS ARE IN MILLIMETERS UNLESS OTHERWISE SHOWN

FOR REDUCED PLANS ORIGINAL SCALE IS IN MILLIMETERS 0 20 40 60 80

DGN FILE =>T:\13103\MS\pse\OTD-Contract 1\CCO\Electrical\CCO-Relocate Geotech arrays\40120iua080r1.dgn
USERNAME =>ricafrente

CU 04251 EA 0120L1

DIST	COUNTY	ROUTE	KILOMETER POST TOTAL PROJECT	SHEET NO	TOTAL SHEETS
04	Ala	80	1.6/2.7	472 R2	643

REGISTERED ELECTRICAL ENGINEER — DATE 05/15/06

REGISTERED PROFESSIONAL ENGINEER — JENS ERLINGSSON — No. 8249 — Exp. 9/30/08 — ELECTRICAL — STATE OF CALIFORNIA

1-29-07
PLANS APPROVAL DATE

PB POWER, Inc.
A Parsons Brinckerhoff Company
303 Second St., Suite 700N
San Francisco, CA 94107-1317

The State of California or its officers or agents shall not be responsible for the accuracy or completeness of electronic copies of this plan sheet.

To get to the caltrans web site, go to http://www.dot.ca.gov

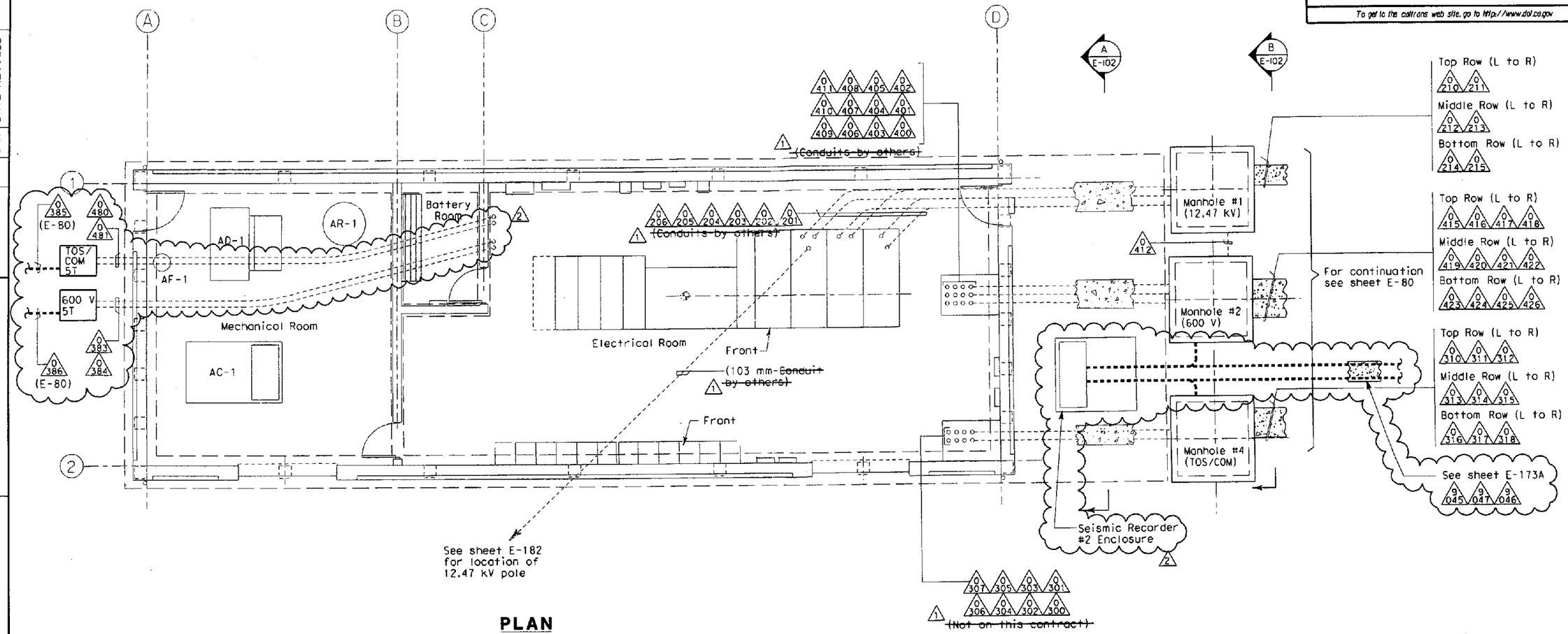

PLAN

NOTES:

1. References:
   - For manhole plans and sections, see sheets starting at E-111.
   - For typical manhole and duct bank details, see sheets starting at E-106.
   - For conduit and cable tray schedules, see sheets starting at E-224.
   - For conduit stub-ups in the Mole Substation, see sheet AE-5.

MARK	DATE	DESCRIPTIONS	REV	CK	CCO NO.
2	7/31/09	Added conduits for relocated Geotech downhole arrays, miscellaneous conduits.	RSB	EJL	Geotech Arrays
1	9/26/08	DELETED REFERENCE TO OTHER CONTRACT	NK	RG	

REVISIONS

CONTRACT CHANGE ORDER NO. 128
SHEET 6 OF 25

REGISTERED PROFESSIONAL ENGINEER — FADI WALIEDDINE — No. 11465 — Exp. 12/31/2009 — ELECTRICAL — STATE OF CALIFORNIA

DETAILS
UNDERGROUND AND ROADWAY AT-GRADE MOLE SUBSTATION CONDUIT
SCALE: 1:50

E-101

STATE OF CALIFORNIA - DEPARTMENT OF TRANSPORTATION
Caltrans

DESIGN OVERSIGHT: BEHZAD GOLEMOHAMMADI

CALCULATED/DESIGNED BY	CHECKED BY	REVISED BY	DATE REVISED
FK	AB		
DATE 2/06	2/06		

LAST REVISION 00-00-00 — DATE PLOTTED => 8/5/2009 — TIME PLOTTED => 8:27:30 AM

FOR REDUCED PLANS ORIGINAL SCALE IS IN MILLIMETERS 0 20 40 60 80

DGN FILE =>t:\13103\ms\pse\OTD-Contract 1\CCO\Electrical\CCO-Relocate Geotech arrays\401201ud101r2.dgn
USERNAME =>llorico

CU 04251 | EA 0120L1

DIST	COUNTY	ROUTE	KILOMETER POST TOTAL PROJECT	SHEET No	TOTAL SHEETS
04	Ala	80	1.6/2.7	473 R1	643

REGISTERED ELECTRICAL ENGINEER 05/15/06 DATE

1-29-07
PLANS APPROVAL DATE

REGISTERED PROFESSIONAL ENGINEER JENS ERLINGSSON No. 8249 Exp. 9/30/08 ELECTRICAL STATE OF CALIFORNIA

PB POWER, Inc.
A Parsons Brinckerhoff Company
303 Second St., Suite 700N
San Francisco, CA 94107-1317

The State of California or its officers or agents shall not be responsible for the accuracy or completeness of electronic copies of this plan sheet.

To get to the caltrans web site, go to http://www.dot.ca.gov

Caltrans Metric

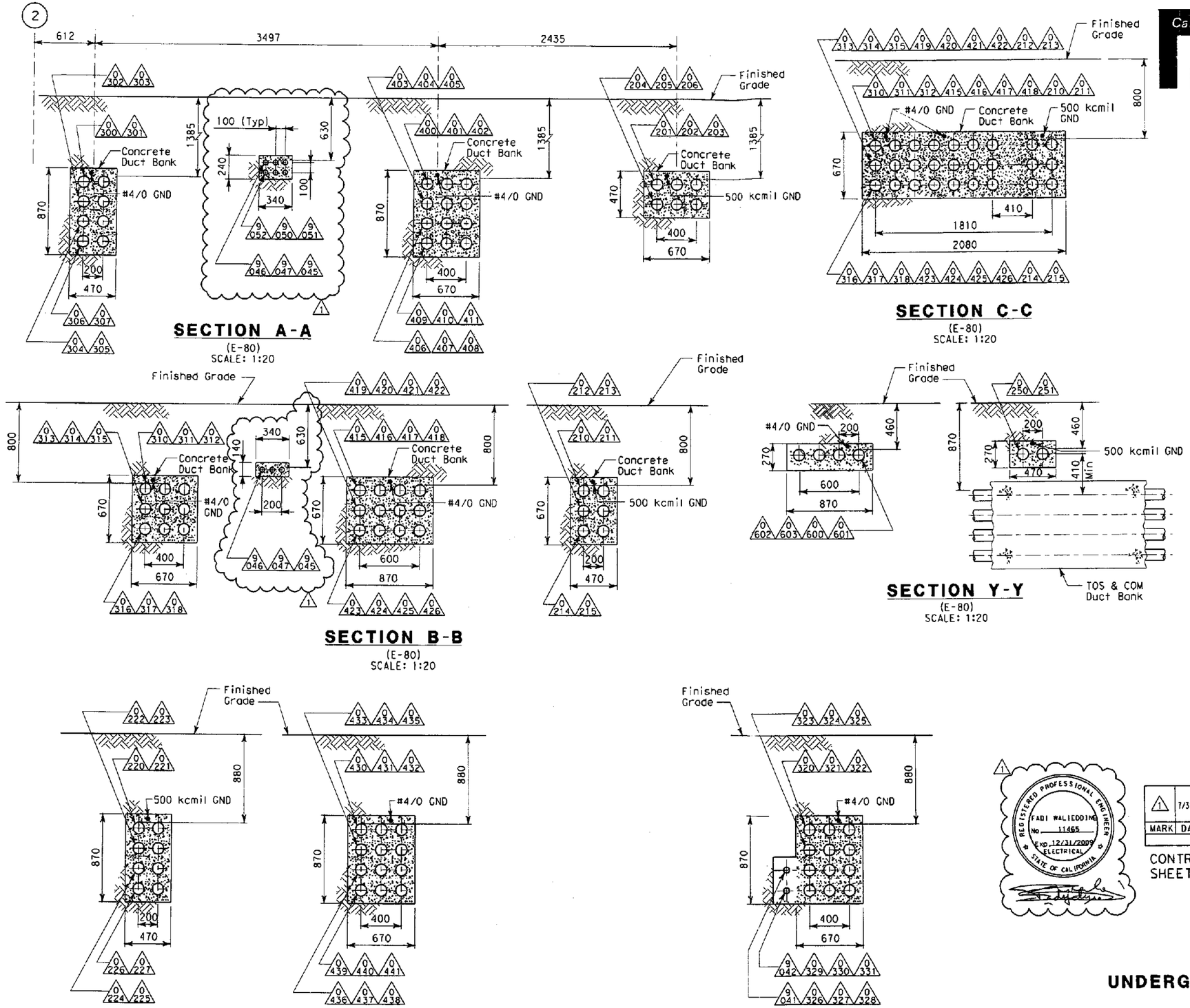

NOTES:

1. References:
   - For substation conduit stub-ups, see sheet AE-5.
   - For typical manhole and duct bank details, see sheet E-119.
   - For conduit and cable tray schedules, see sheets starting at E-224.
   - For section D1-D1, D2-D2 and D3-D3, see sheet E-109.

REGISTERED PROFESSIONAL ENGINEER FADI WALIEDDINE No. 11465 Exp. 12/31/2009 ELECTRICAL STATE OF CALIFORNIA

MARK	DATE	DESCRIPTIONS	REV	CK	CCO NO.
1	7/31/09	Revised sections A-A and B-B. Added conduits 9046, 9047, 9045, 9020, 9052, 9050, and 9051.	RSB	EJL	Geotech Arrays

REVISIONS

CONTRACT CHANGE ORDER NO. 128
SHEET 7 OF 25

DETAILS
UNDERGROUND AND ROADWAY AT-GRADE DUCT BANK SECTIONS

SCALE AS NOTED

ALL DIMENSIONS IN MILIMETERS UNLESS OTHERWISE SHOWN

E-102

CALCULATED/DESIGNED BY	FK	DATE 2/06	REVISED BY
CHECKED BY	AB	2/06	DATE REVISED

DESIGN OVERSIGHT
BEHZAD GOLEMOHAMMADI

STATE OF CALIFORNIA - DEPARTMENT OF TRANSPORTATION
Caltrans

LAST REVISION 00-00-00
DATE PLOTTED => 8/4/2009
TIME PLOTTED => 3:11:40 PM

FOR REDUCED PLANS ORIGINAL SCALE IS IN MILLIMETERS 0 20 40 60 80

DGN FILE =>T:\13103\WS\pse\OTD-Contract 1\CCO\Electrical\CCO-Re|ocate Geotech arrays\401201ud|02r1.dgn
USERNAME =>ricofrente

CU 04251 EA 0120L1

DIST	COUNTY	ROUTE	KILOMETER POST TOTAL PROJECT	SHEET NO	TOTAL SHEETS
04	Ala	80	1.6/2.7	482 R1	643

REGISTERED ELECTRICAL ENGINEER 05/15/06 DATE

1-29-07
PLANS APPROVAL DATE

REGISTERED PROFESSIONAL ENGINEER JENS ERLINGSSON No. 8249 Exp. 9/30/08 ELECTRICAL STATE OF CALIFORNIA

PB POWER, Inc.
A Parsons Brinckerhoff Company
303 Second St., Suite 700N
San Francisco, CA 94107-1317

The State of California or its officers or agents shall not be responsible for the accuracy or completeness of electronic copies of this plan sheet.

To get to the caltrans web site, go to http://www.dot.ca.gov

Caltrans Metric

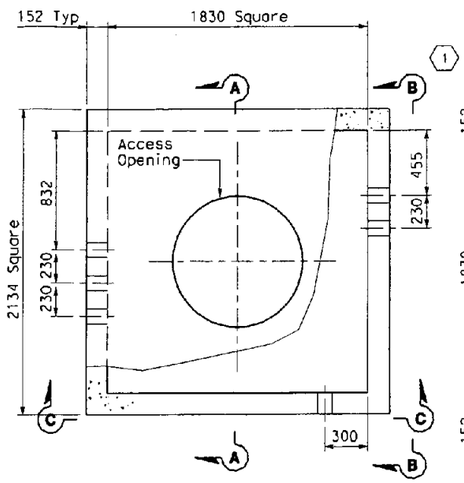

PLAN-MANHOLE-1
(12.47 kV)
(E-80)
SCALE: 1:20

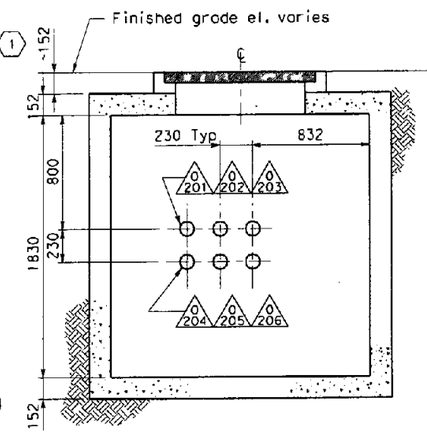

SECTION A-A
SCALE: 1:20

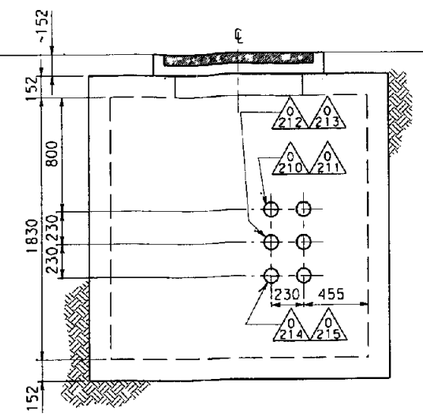

SECTION B-B
SCALE: 1:20

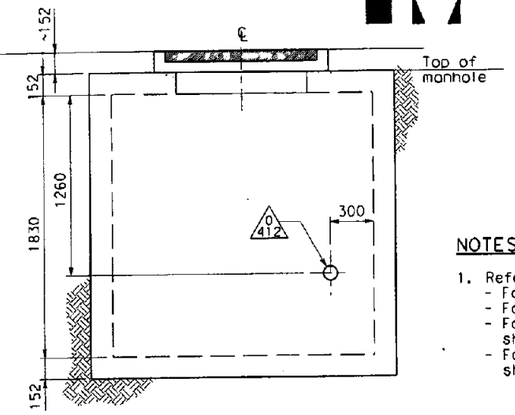

SECTION C-C
SCALE: 1:20

NOTES:

1. References:
   - For substation conduit stub-ups, see sheet E-101.
   - For duct bank sections, see sheet E-102.
   - For typical manhole and duct bank details, see sheet E-119.
   - For conduit and cable tray schedules, see sheets starting at E-224.

SHEET NOTES:

(1) Approximate distance of manhole necking or riser is from the finished grade and top of manhole. Maximum length of manhole necking or riser shall be 914 mm.

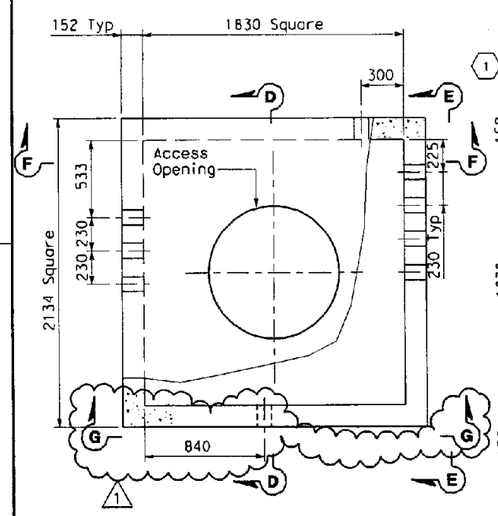

PLAN-MANHOLE-2
(600 V)
(E-80)
SCALE: 1:20

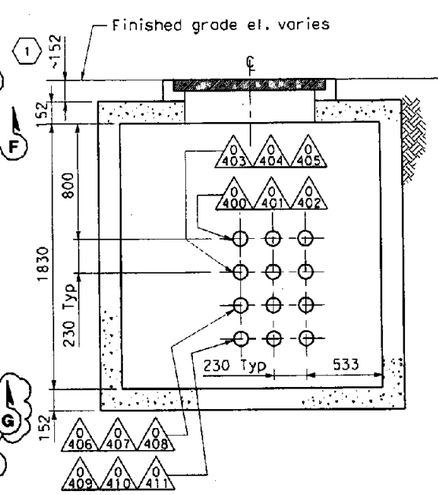

SECTION D-D
SCALE: 1:20

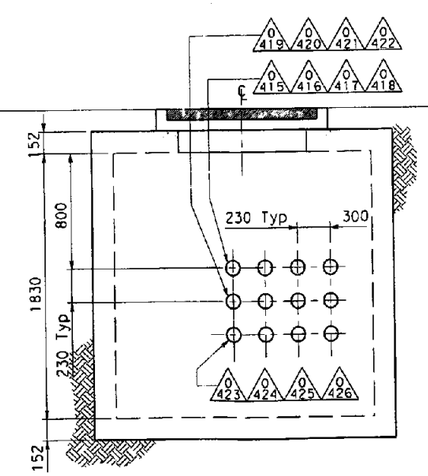

SECTION E-E
SCALE: 1:20

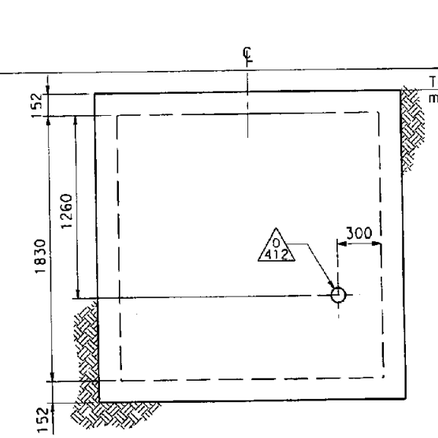

SECTION F-F
SCALE: 1:20

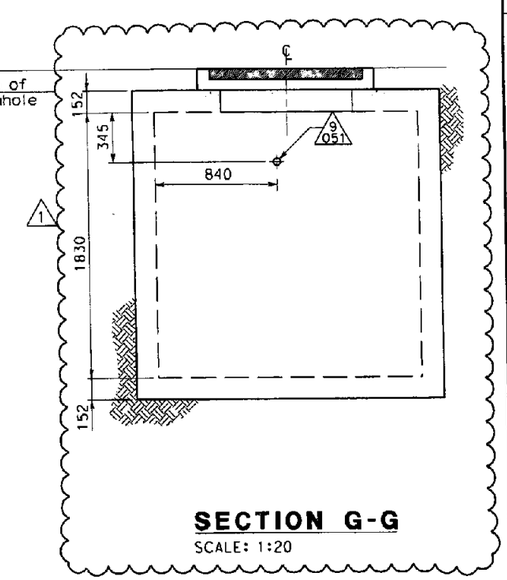

SECTION G-G
SCALE: 1:20

MARK	DATE	DESCRIPTIONS	REV	CK	CCO NO.
1	7/31/09	Added section G-G and conduit 9-051	RSB	EJL	Geotech Arrays

REVISIONS

CONTRACT CHANGE ORDER NO. 128
SHEET 8 OF 25

REGISTERED PROFESSIONAL ENGINEER FADI WALIEDDINE No. 11465 Exp. 12/31/2009 ELECTRICAL STATE OF CALIFORNIA

DETAILS
UNDERGROUND AND ROADWAY AT-GRADE MANHOLE PLANS AND SECTIONS
SCALE AS NOTED

E-111

ALL DIMENSIONS ARE IN MILLIMETERS UNLESS OTHERWISE SHOWN

FOR REDUCED PLANS ORIGINAL SCALE IS IN MILLIMETERS 0 20 40 60 80

DGN FILE =>T:\13103\US\pse\OTD-Contract 1\CCO\Electrical\CCO-Re ocate Geotech arrays\401201ud111r1.dgn
USERNAME =>ricafrente

CU 04251 | EA 0120L1

DATE PLOTTED => 8/4/2009
TIME PLOTTED => 4:18:29 PM

LAST REVISION 00-00-00

STATE OF CALIFORNIA - DEPARTMENT OF TRANSPORTATION
Caltrans

DESIGN OVERSIGHT
BEHZAD GOLEMOHAMMADI

CALCULATED/ DESIGNED BY	FK	DATE 2/06	REVISED BY	DATE REVISED
CHECKED BY	AB	2/06		

DIST	COUNTY	ROUTE	KILOMETER POST TOTAL PROJECT	SHEET NO	TOTAL SHEETS
04	Ala	80	1.6/2.7	483 R1	643

REGISTERED ELECTRICAL ENGINEER 05/15/06 DATE

1-29-07
PLANS APPROVAL DATE

REGISTERED PROFESSIONAL ENGINEER JENS ERLINGSSON No. 8249 Exp. 9/30/08 ELECTRICAL STATE OF CALIFORNIA

PB POWER, Inc.
A Parsons Brinckerhoff Company
303 Second St., Suite 700N
San Francisco, CA 94107-1317

The State of California or its officers or agents shall not be responsible for the accuracy or completeness of electronic copies of this plan sheet.

To get to the caltrans web site, go to http://www.dot.ca.gov

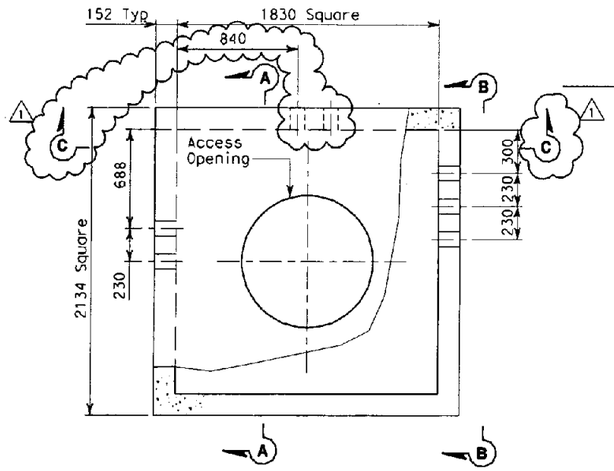

PLAN-MANHOLE-4
(TOS & COMMUNICATION)
(E-80)
SCALE: 1:20

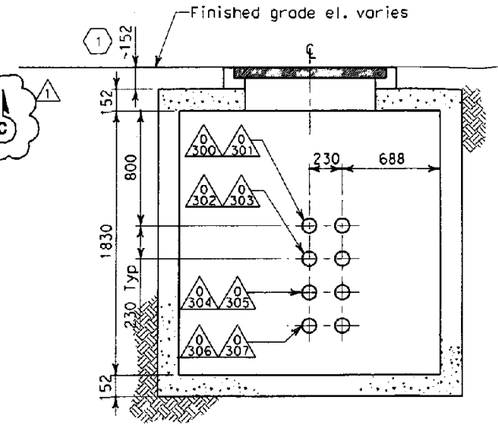

SECTION A-A
SCALE: 1:20

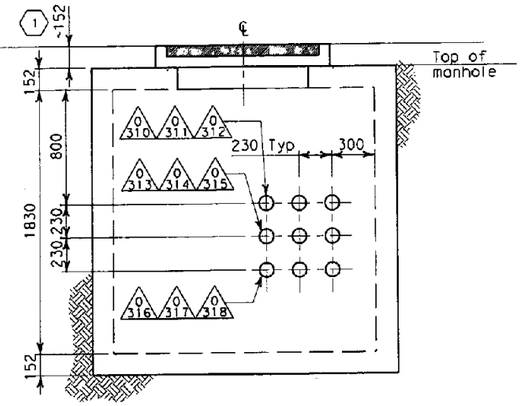

SECTION B-B
SCALE: 1:20

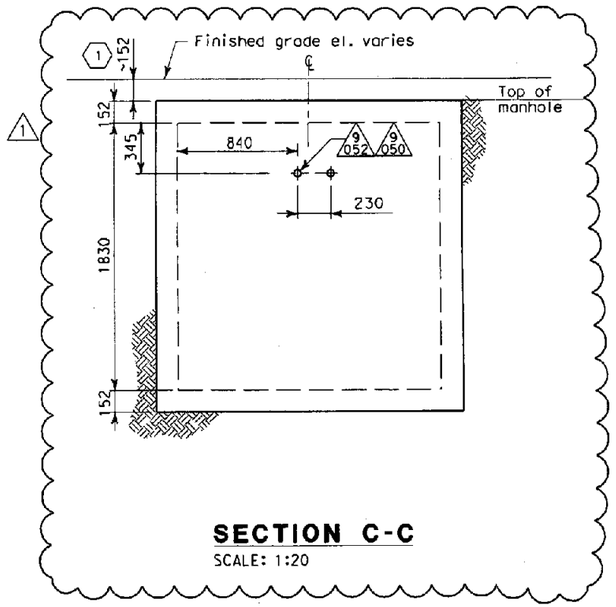

SECTION C-C
SCALE: 1:20

NOTES:

1. References:
   - For duct bank sections, see sheet E-102.
   - For typical manhole and duct bank details, see sheet E-119.
   - For conduit and cable tray schedules, see sheets starting at E-224.
   - For substation conduit stub-ups, see sheet E-101.
2. Contractor shall take necessary precaution to protect all fiber optic cables inside manholes (TOS/Communication). This shall include, but not be limited to, securing cable on the side of manhole, isolating the cable from other media, and ensuring that the minimum bending radius is not exceeded.

SHEET NOTES:

(1) Approximate distance of manhole necking or riser is from the finished grade and top of manhole. Maximum length of manhole necking or riser shall be 914 mm.

REGISTERED PROFESSIONAL ENGINEER FADI WALIEDDINE No. 11465 Exp. 12/31/2009 ELECTRICAL STATE OF CALIFORNIA

MARK	DATE	DESCRIPTIONS	REV	CK	CCO NO.
1	7/31/09	Added section C-C and conduits 9050 and 9052	RSB	EJL	Geotech Arrays

REVISIONS

CONTRACT CHANGE ORDER NO. 128
SHEET 9 OF 25

DETAILS
UNDERGROUND AND ROADWAY AT-GRADE MANHOLE PLANS AND SECTIONS
SCALE AS NOTED

E-112

CALCULATED/DESIGNED BY	FK	DATE 2/06	REVISED BY
CHECKED BY	AB	2/06	DATE REVISED

DESIGN OVERSIGHT
BEHZAD GOLEMOHAMMADI

STATE OF CALIFORNIA - DEPARTMENT OF TRANSPORTATION
Caltrans

LAST REVISION 00-00-00 | DATE PLOTTED => 8/4/2009 | TIME PLOTTED => 4:18:57 PM

ALL DIMENSIONS ARE IN MILLIMETERS UNLESS OTHERWISE SHOWN

FOR REDUCED PLANS ORIGINAL SCALE IS IN MILLIMETERS 0 20 40 60 80

DGN FILE =>T:\13103\MS\pse\OTD-Contract 1\CCO\Electrical\CCO-Re acote Geotech arrays\40120lua112r1.dgn
USERNAME =>ricafrente

CU 04251 | EA 0120L1

DIST	COUNTY	ROUTE	KILOMETER POST TOTAL PROJECT	SHEET NO	TOTAL SHEETS
04	Ala	80	1.6/2.7	519 R1	643

REGISTERED ELECTRICAL ENGINEER 05/15/06 DATE

1-29-07
PLANS APPROVAL DATE

REGISTERED PROFESSIONAL ENGINEER JENS ERLINGSSON No. 8249 Exp. 9/30/08 ELECTRICAL STATE OF CALIFORNIA

PB POWER, Inc.
A Parsons Brinckerhoff Company
303 Second St., Suite 700N
San Francisco, CA 94107-1317

The State of California or its officers or agents shall not be responsible for the accuracy or completeness of electronic copies of this plan sheet.

To get to the Caltrans web site, go to: http://www.dot.ca.gov

Caltrans Metric

UTILITY PANEL UP-004 (CKT #1632)

LOCATION: MOLE SUBSTATION

LOAD DESCRIPTION	LTG	REC	OTH.	CB		CB	LTG	REC	OTH.	LOAD DESCRIPTION
Unit Substation Space Heaters			1575	30/1	1 A 2	20/1			600	Strong Motion Recorder #1
Battery Charger & Rectifier			250	50/1	3 B 4	20/2			600	Substation Transformer Cooling Fans
Spare				20/1	5 C 6				600	
↓				20/1	7 A 8	20/1			600	Strong Motion Recorder #2 (1)
RTU #16 (PLC)			100	20/1	9 B 10	20/1			900	480 V LVCC-A Space Heater
RTU #16 (Lighting, Receptacle, Indicating lights)	105	180	365	20/1	11 C 12	20/1			900	480 V LVCC-B Space Heater
Spare				15/1	13 A 14	20/1				Spare
				20/1	15 B 16	20/1				
↓				20/1	17 C 18	20/1				↓
Space					19 A 20					Space
					21 B 22					
↓					23 C 24					↓
TOTAL VA	105	180	2290				-	-	4200 (1)	TOTAL VA

LOAD SUMMARY IN VA

Lighting (At 100%): 105 VA
Gen Use: (1st 10 kVA at 100% Plus 50% of remainder): 6670 VA (1)

TOTAL kVA: 6.775 kVA (1)
TOTAL Amp: 18.81 A at 208 V, 3ø

BALANCE (kVA)

Phase A - 2.775 (1)
Phase B - 1.850
Phase C - 2.150

VOLTAGE: 208/120 V
PHASE/WIRES: 3-phase, 4-wire
BUS RATING: 100 A
MAIN: 100 A
MOUNTING: Surface
K.A.I.C.: 10

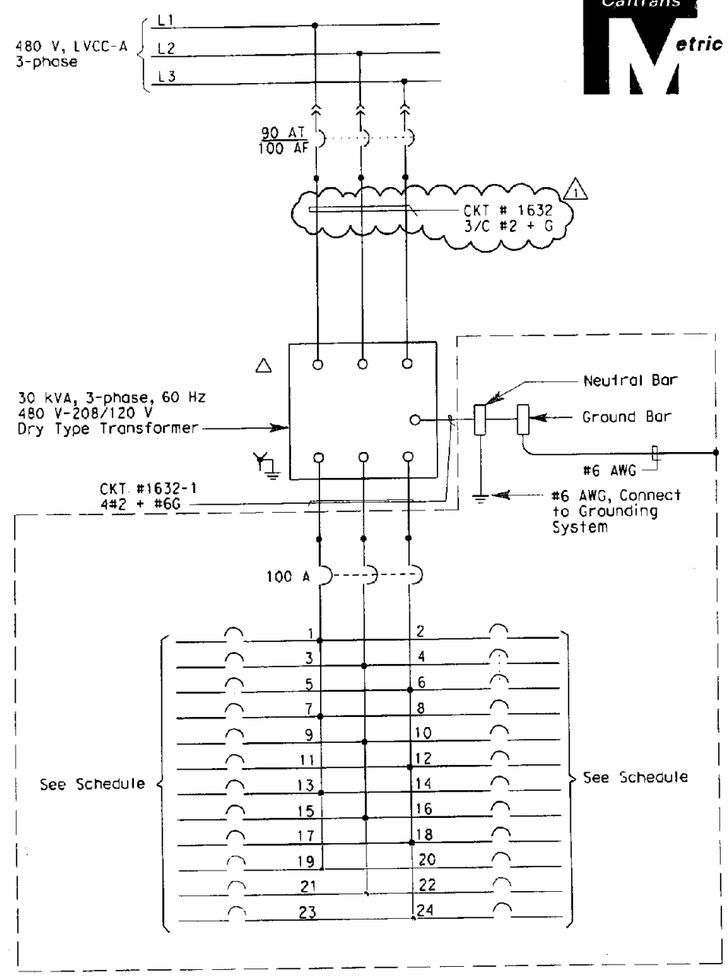

Utility Panel UP-004

NOTES:

1. Contractor shall provide nameplates and circuit schedule as shown.
2. For system ground wire size, see sheet AE-4.
3. References:
   - For 480 V LVCC-A single line diagram, see sheet E-130.

REGISTERED PROFESSIONAL ENGINEER FADI WALIEDDINE No. 11465 Exp. 12/31/2009 ELECTRICAL STATE OF CALIFORNIA

MARK	DATE	DESCRIPTIONS	REV	CK	CCO NO.
1	7/31/09	Added new cable ckt. for Strong Motion Recorder #2. Revised cable size	RSB	EJL	Geotech Arrays

REVISIONS

CONTRACT CHANGE ORDER NO. 128
SHEET 10 OF 25

DETAILS
MOLE SUBSTATION ELECTRICAL PANEL UP-004 SCHEDULE
NO SCALE

E-148

STATE OF CALIFORNIA - DEPARTMENT OF TRANSPORTATION
Caltrans

DESIGN OVERSIGHT: BEHZAD GOLEMOHAMMADI

	DATE	REVISED BY	DATE	REVISED
CALCULATED/DESIGNED BY	AB	2/06		
CHECKED BY	FK	2/06		

LAST REVISION 00-00-00 DATE PLOTTED => 8/4/2009 TIME PLOTTED => 3:12:54 PM

FOR REDUCED PLANS ORIGINAL SCALE IS IN MILLIMETERS 0 20 40 60 80

DGN FILE =>T:\13103\MS\pse\OTD-Contract 1\CCO\Electrical\CCO-Re USERNAME =>ricafrente

ocate Geotech arrays\40120lu148r1.dgn
CU 04251 EA 0120L1

MARK	DATE	DESCRIPTIONS	REV	CK	CCO NO.
3	7/31/09	Added new cable and CKT 2507-16	RSB	EJL	Geotech Arrays
2	2/27/09	Added EF-2 input to RTU #16.	DO	EJL	Battery Room
1	8/29/08	Added CKT #A-2007, A-2008, #A-1006, #A-1007, #A-1008	MP	EJL	Light Pipe

REVISIONS

CONTRACT CHANGE ORDER NO. 128
SHEET 11 OF 25

REGISTERED PROFESSIONAL ENGINEER FADI WALIEDDINE No. 11465 Exp. 12/31/2009 ELECTRICAL STATE OF CALIFORNIA

3. References:
- For UP-004 panel schedule, see Sheet E-148.
- For relay configuration, see Sheet E-155.
- For 480 V LVCC elevation and schedules, see sheets E-131 and E-132.
- For conduit/cable tray schedules, see sheets starting at E-224.

Caltrans Metric

DIST	COUNTY	ROUTE	KILOMETER POST TOTAL PROJECT	SHEET NO	TOTAL SHEETS
04	Ala	80	1.6/2.7	527 R3	643

REGISTERED ELECTRICAL ENGINEER 05/15/06 DATE

1-29-07
PLANS APPROVAL DATE

REGISTERED PROFESSIONAL ENGINEER JENS ERLINGSSON No. 8249 Exp. 9/30/08 ELECTRICAL STATE OF CALIFORNIA

PB POWER, Inc.
A Parsons Brinckerhoff Company
303 Second St., Suite 700N
San Francisco, CA 94107-1317

The State of California or its officers or agents shall not be responsible for the accuracy or completeness of electronic copies of this plan sheet.

To get to the Caltrans web site, go to: http://www.dot.ca.gov

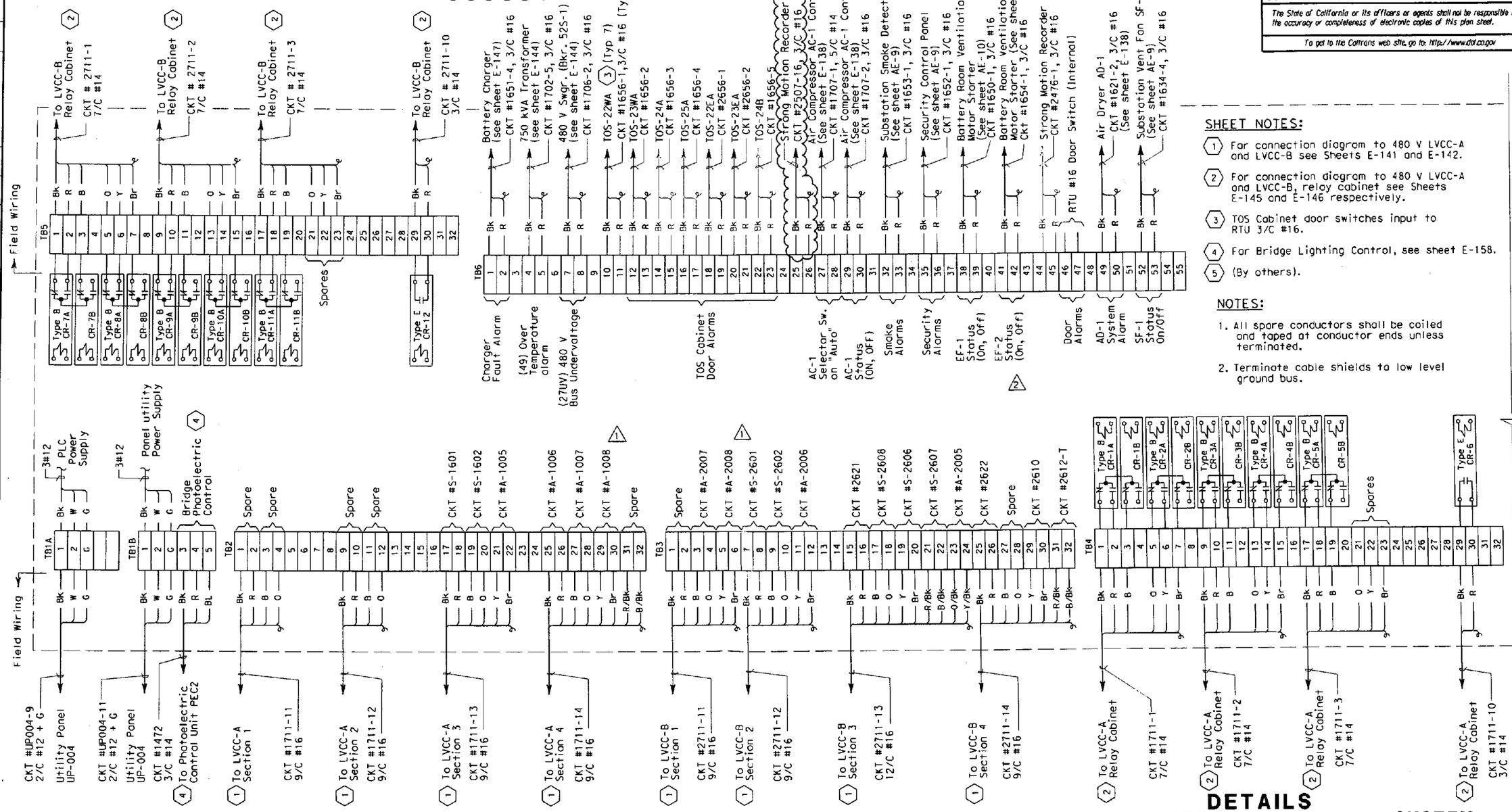

SHEET NOTES:

(1) For connection diagram to 480 V LVCC-A and LVCC-B see Sheets E-141 and E-142.

(2) For connection diagram to 480 V LVCC-A and LVCC-B, relay cabinet see Sheets E-145 and E-146 respectively.

(3) TOS Cabinet door switches input to RTU 3/C #16.

(4) For Bridge Lighting Control, see sheet E-158.

(5) (By others).

NOTES:

1. All spare conductors shall be coiled and taped at conductor ends unless terminated.
2. Terminate cable shields to low level ground bus.

DETAILS
SCADA REMOTE TERMINAL UNIT SYSTEM
RTU #16 ELEMENTARY AND CONNECTION DIAGRAM
NO SCALE

E-156

STATE OF CALIFORNIA - DEPARTMENT OF TRANSPORTATION
Caltrans

DESIGN OVERSIGHT: BEHZAD GOLEMOHAMMADI

CALCULATED/ DESIGNED BY	FK	DATE 2/06	REVISED BY
CHECKED BY	AB	2/06	DATE REVISED

LAST REVISION 00-00-00
DATE PLOTTED => 8/4/2009
TIME PLOTTED => 3:13:17 PM

FOR REDUCED PLANS ORIGINAL SCALE IS IN MILLIMETERS 0 20 40 60 80

DGN FILE =>T:\13103\MS\pse\OTD-Contract 1\CCO\Electrical\CCO-Relocate Geotech arrays\401201ua156r3.dgn
USERNAME =>ricofrente
CU 04251 EA 0120L1

DIST	COUNTY	ROUTE	KILOMETER POST TOTAL PROJECT	SHEET NO	TOTAL SHEETS
04	Alo	80	1.6/2.7	544A R0	643

REGISTERED ELECTRICAL ENGINEER DATE

PLANS APPROVAL DATE

REGISTERED PROFESSIONAL ENGINEER FADI WALIEDDINE No. 11465 Exp. 12/31/09 ELECTRICAL STATE OF CALIFORNIA

PB POWER, Inc.
A Parsons Brinckerhoff Company
303 Second St., Suite 700N
San Francisco, CA 94107-1317

The State of California or its officers or agents shall not be responsible for the accuracy or completeness of electronic copies of this plan sheet.

To get to the Caltrans web site, go to: http://www.dot.ca.gov

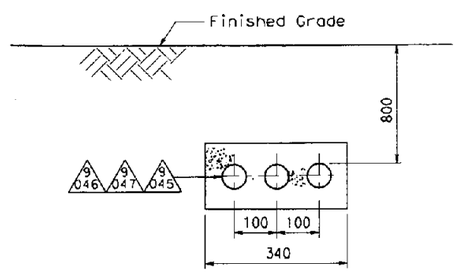

SECTION C-C
NO SCALE

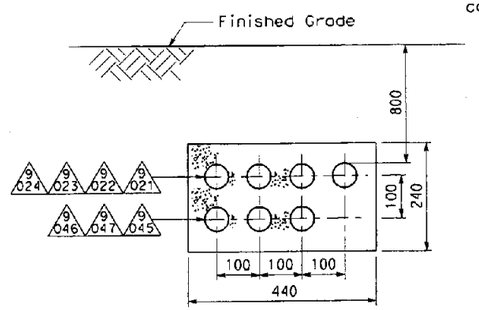

SECTION D-D
NO SCALE

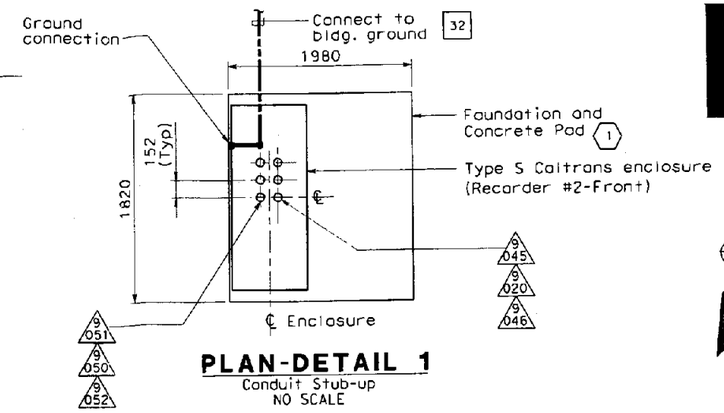

PLAN-DETAIL 1
Conduit Stub-up
NO SCALE

SHEET NOTES:

(1) Contractor shall install concrete foundation per Caltrans standard plan ES-3C.

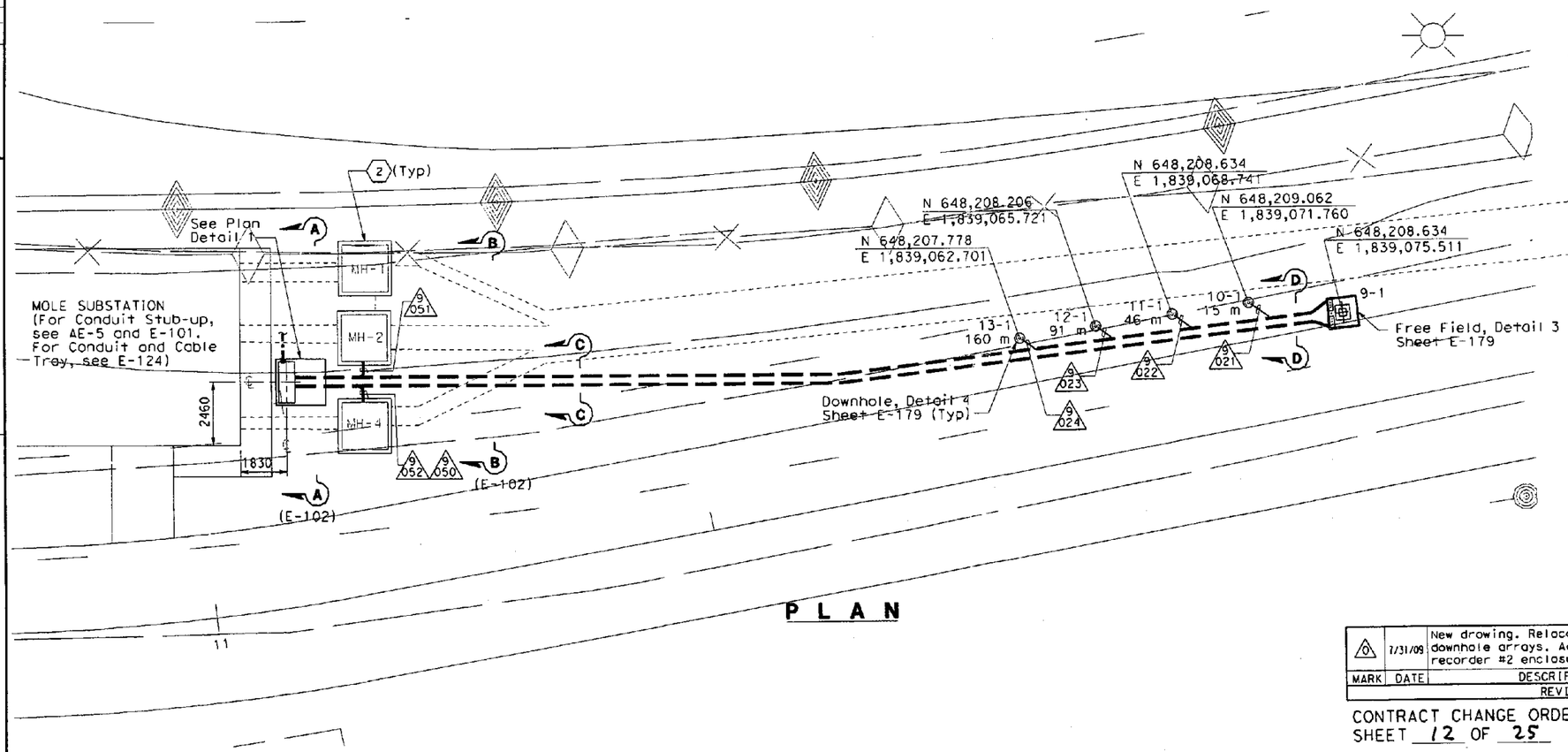

PLAN

NOTES:

1. Exact location of downhole array is shown as noted or determined by Caltrans Engineer.
2. References:
   - For conduit and cable tray schedules, see sheets starting at E-224.
   - For strong motion sensor enclosures, see sheet E-181.
3. Downhole sensor cables will be furnished and installed in conduit by CGS.
4. Downhole sensor cables will be spliced to seismic cable by CGS.
5. Coordinate the exact termination of 103 mm PVC casing with Caltrans office of Earthquake engineering and CGS utilizing the P/S suspension lugs provided by state forces.
6. Underground conduits shall be encased in concrete.
7. For Manholes and Duct banks Plan, see sheets E-80, E-81 and E-102.

MARK	DATE	DESCRIPTIONS	REV	CK	CCO NO.
0	7/31/09	New drawing. Relocated geotech downhole arrays. Added seismic recorder #2 enclosure	RSB	EJL	Geotech Arrays

REVISIONS

CONTRACT CHANGE ORDER NO. 128
SHEET 12 OF 25

DETAILS
STRONG MOTION DETECTION SYSTEM
PLAN AT GRADE-MOLE SUBSTATION

SCALE: 1:100

E-173A

CALCULATED/DESIGNED BY	RSB	DATE 2/09	REVISED BY
CHECKED BY	EJL	2/09	DATE REVISED

DESIGN OVERSIGHT: BEHZAD GOLEMOHAMMADI

STATE OF CALIFORNIA - DEPARTMENT OF TRANSPORTATION

Caltrans

THIS PLAN ACCURATE FOR ELECTRICAL WORK ONLY.

ALL DIMENSIONS ARE IN MILLIMETERS UNLESS OTHERWISE SHOWN

FOR REDUCED PLANS ORIGINAL SCALE IS IN MILLIMETERS 0 20 40 60 80

DGN FILE =>T:\13103\MS\pse\OTD-Contract 1\CCO\Electrical\CCO-Relocate Geotech arrays\401201uc173A.dgn
USERNAME =>ricafrente

CU 04251 | EA 0120L1

LAST REVISION 00-00-00 | DATE PLOTTED => 8/4/2009 TIME PLOTTED => 3:13:45 PM

DIST	COUNTY	ROUTE	KILOMETER POST TOTAL PROJECT	SHEET NO	TOTAL SHEETS
04	Ala	80	1.6/2.7	544 R1	643

REGISTERED ELECTRICAL ENGINEER DATE 05/15/06

1-29-07
PLANS APPROVAL DATE

REGISTERED PROFESSIONAL ENGINEER JENS ERLINGSSON No. 8249 Exp. 9/30/06 ELECTRICAL STATE OF CALIFORNIA

PB POWER, Inc.
A Parsons Brinckerhoff Company
303 Second St., Suite 700N
San Francisco, CA 94107-1317

The State of California or its officers or agents shall not be responsible for the accuracy or completeness of electronic copies of this plan sheet.

To get to the Caltrans web site, go to: http://www.dot.ca.gov

Caltrans Metric

REGISTERED PROFESSIONAL ENGINEER FADI WALIEDDINE No. 11465 Exp. 12/31/2009 ELECTRICAL STATE OF CALIFORNIA

SHEET NOTES:

1. For locations of sensors at Hinge EE, and midspan Pier table E17R/E18R at the girder level, see plans on sheet E-174.
2. For locations of sensors at Pier E18R at the girder level, see plans on sheet E-175.
3. For locations of sensors at Pier table E19R at the girder level, see plans on sheet E-176.
4. For location of conduits in pier E22R, see plan sheet E-178.

GENERAL NOTES:

1. Strong motion detection system is located and installed on the Eastbound structure.
2. Install pull rope in all seismic sensor conduits for future use. Label appropriately.
3. References:
   - For strong motion sensor enclosures, see sheet E-181.
4. For location of geotech downhole arrays, see sheet E-173A. (1)

MARK	DATE	DESCRIPTIONS	REV	CK	CCO NO.
1	7/31/09	Relocated geotech downhole arrays to East of Male Substation building. Added note 4.	RSB	EJL	Geotech Arrays

REVISIONS

CONTRACT CHANGE ORDER NO. 128
SHEET 13 OF 25

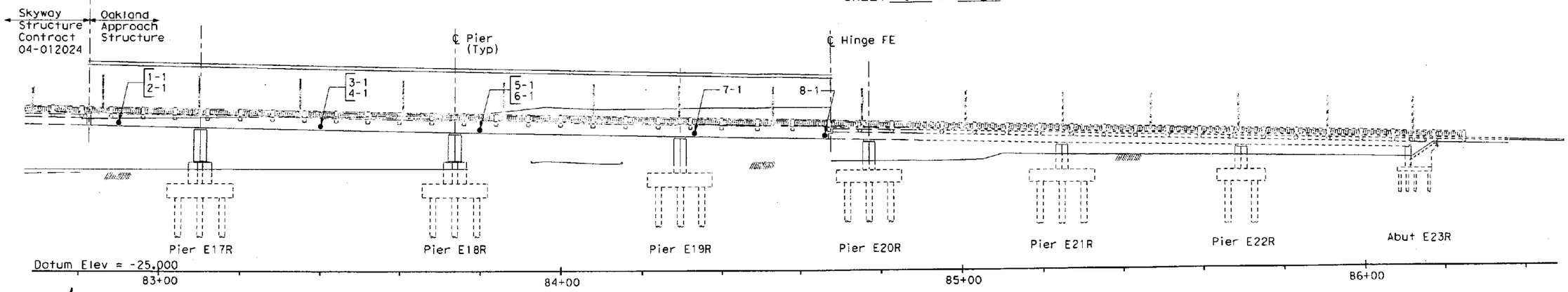

ELEVATION - EASTBOUND
1:400

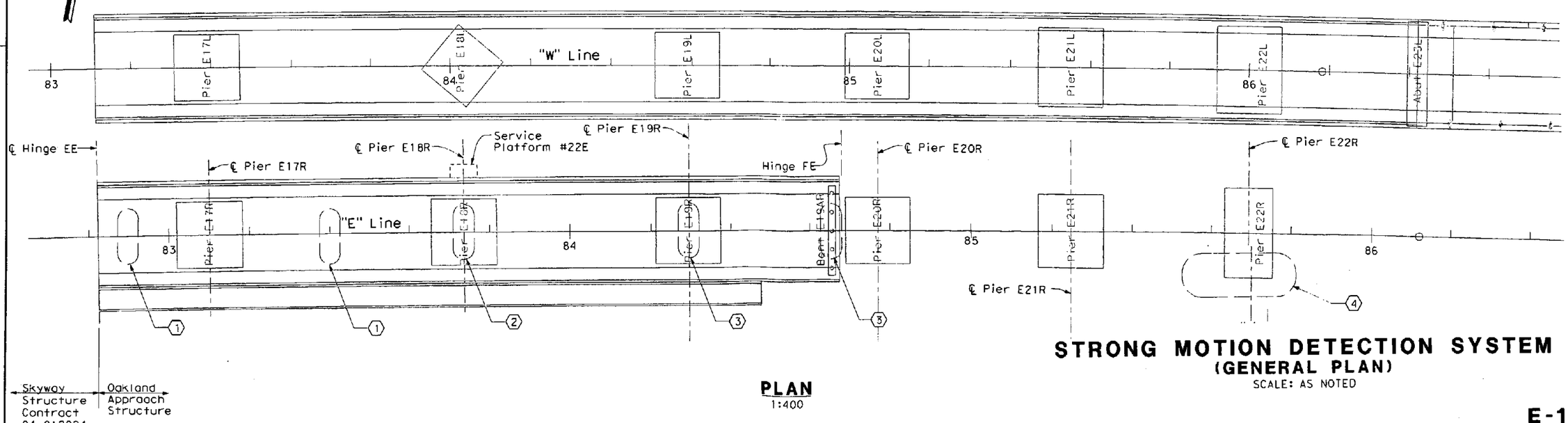

PLAN
1:400

STRONG MOTION DETECTION SYSTEM
(GENERAL PLAN)
SCALE: AS NOTED

E-173

STATE OF CALIFORNIA - DEPARTMENT OF TRANSPORTATION
Caltrans

DESIGN OVERSIGHT: BEHZAD GOLEMOHAMMADI

CALCULATED/DESIGNED BY	DATE	REVISED BY	DATE REVISED
KC	2/06		
CHECKED BY		AB	2/06

LAST REVISION 00-00-00

DATE PLOTTED => 8/4/2009
TIME PLOTTED => 3:14:15 PM

FOR REDUCED PLANS ORIGINAL SCALE IS IN MILLIMETERS 0 20 40 60 80

DGN FILE =>T:\13103\MS\pse\OTD-Contract 1\CCO\Electrical\CCO-Relocate Geotech arrays\401201uc173r1.dgn
USERNAME =>ricafrente

CU 04251 | EA 0120L1

DIST	COUNTY	ROUTE	KILOMETER POST TOTAL PROJECT	SHEET No	TOTAL SHEETS
04	Ala	80	1.6/2.7	549 R1	643

REGISTERED ELECTRICAL ENGINEER 05/15/06 DATE

1-29-07
PLANS APPROVAL DATE

REGISTERED PROFESSIONAL ENGINEER JENS ERLINGSSON No. 8249 Exp. 9/30/08 ELECTRICAL STATE OF CALIFORNIA

PB POWER, Inc.
A Parsons Brinckerhoff Company
303 Second St., Suite 700N
San Francisco, CA 94107-1317

The State of California or its officers or agents shall not be responsible for the accuracy or completeness of electronic copies of this plan sheet.

To get to the Caltrans web site, go to: http://www.dot.ca.gov

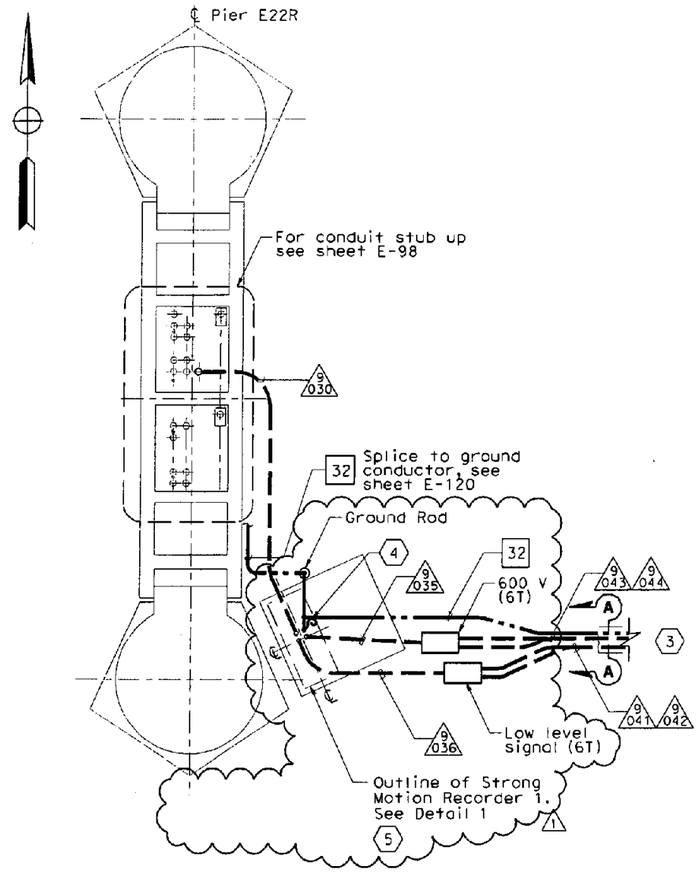

PLAN AT GRADE
PIER E22R
SCALE: 1:50

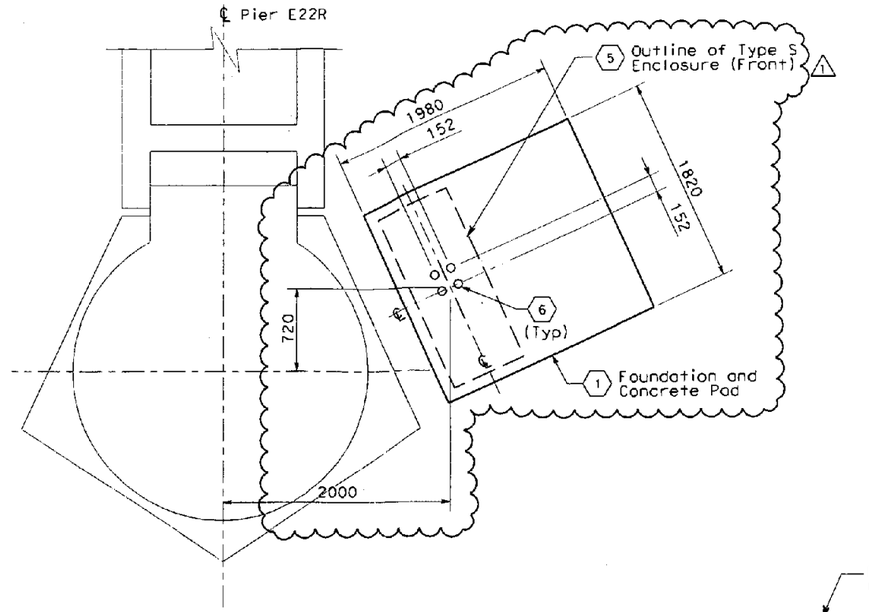

PLAN - DETAIL 1
Conduit stub up Arrangement
SCALE: 1:25

REGISTERED PROFESSIONAL ENGINEER FADI WALIEDDINE No. 11465 Exp. 12/31/2009 ELECTRICAL STATE OF CALIFORNIA

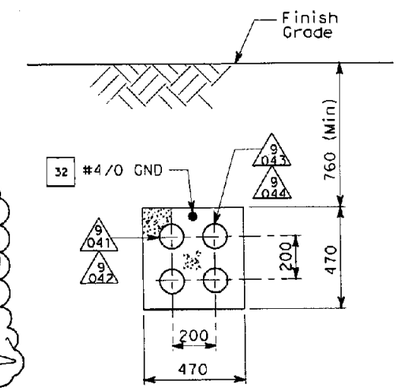

SECTION A-A
NO SCALE

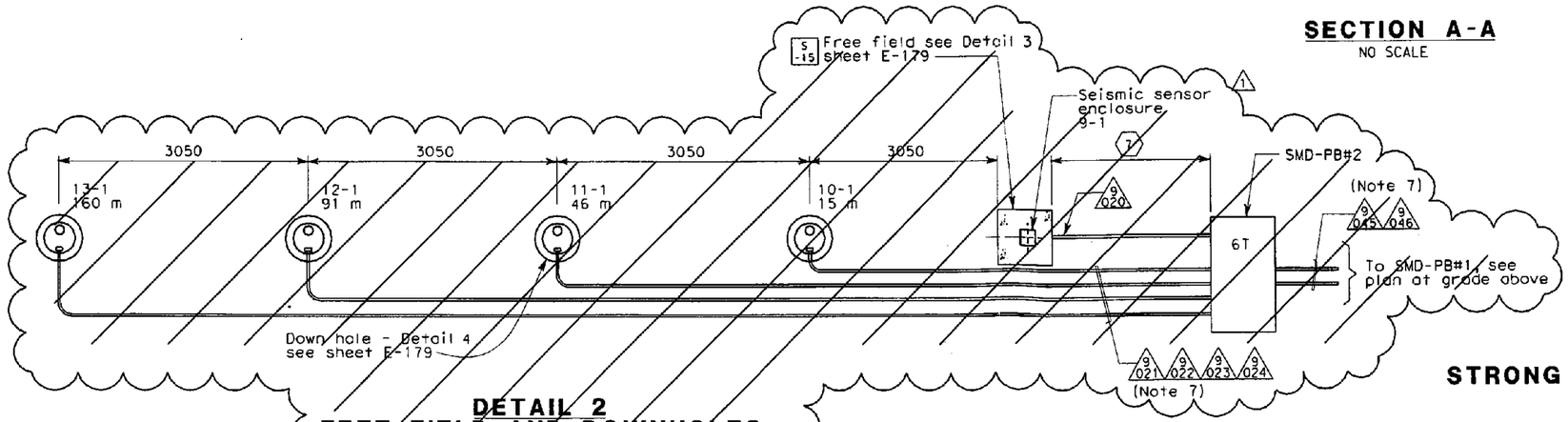

DETAIL 2
FREE FIELD AND DOWNHOLES 2
NO SCALE
(See Sheet E-173A)

SHEET NOTES:

1. Contractor shall install concrete foundation per Caltrans standard plans ES-3C.
2. ~~CGS shall determine exact location. See E-179 for details.~~
3. For continuation to manholes, see sheet E-81.
4. Contractor to leave 5000 mm pigtail #4/0 bare copper ground conductor. Final connection is in a separation contract.
5. Type S enclosure for strong motion recorder at Pier E22R, installed in another contract.
6. Stub-up conduits shall be capped. Contractor to protect conduits for the entire duration of the contract. Conduits shall be extended to Seismic Enclosure Panel by another contract.
7. ~~Minimum distance between freefield and SMD-PB#2 to be 3048 mm.~~

NOTES:

1. ~~Exact location of downhole array to be determined in field by Caltrans Engineer & CGS.~~
2. References:
   - For conduit and cable tray schedules, see sheets starting at EE-224.
3. ~~For other related work not shown on this sheet, see Electrical Special Provisions.~~
4. ~~Downhole sensor cables will be furnished and installed in conduit by CGS.~~
5. ~~Downhole sensor cables will be spliced to seismic cable by CGS.~~
6. ~~Coordinate the exact termination of 103 mm PVC casing with Caltrans office of Earthquake engineering and CGS utilizing the P/S suspension logs provided by state forces.~~
7. Underground conduits shall be encased in concrete.
8. ~~SMD-PB #1 is Strong Motion Detection Pull Box No. 1.~~

MARK	DATE	DESCRIPTIONS	REV	CK	CCO NO.
1	7/31/09	Revised and relocated downhole arrays and Detail 1. Deleted conduits 9031, 9032, 9037, Detail 2, sheet notes 2, & 7, notes 3, 4, 5, 6 and 8. Changed conduit size 9036.	RSB	EJL	Geotech Arrays

REVISIONS

CONTRACT CHANGE ORDER NO. 128
SHEET 14 OF 25

DETAILS
STRONG MOTION DETECTION SYSTEM
PLAN AT GRADE
SCALE AS NOTED

E-178

CALCULATED/DESIGNED BY	FK	DATE 2/06	REVISED BY	DATE REVISED
CHECKED BY	AB	2/06		

DESIGN OVERSIGHT
BEHZAD GOLEMOHAMMADI

STATE OF CALIFORNIA - DEPARTMENT OF TRANSPORTATION
Caltrans

FILE: T:\13103\ms\pse\electrical\cco\13103es1885.dgn
DATE: 11-Aug-00 10:25

LAST REVISION 00-00-00
DATE PLOTTED => 8/4/2009
TIME PLOTTED => 3:14:38 PM

FOR REDUCED PLANS ORIGINAL SCALE IS IN MILLIMETERS 0 20 40 60 80

DGN FILE =>T:\13103\MS\pse\OTD-Contract 1\CCO\Electrical\CCO-Re
USERNAME =>ricafrente
acate Geotech arrays\40120tud178r1.dgn
CU 04251
EA 0120L1

DIST	COUNTY	ROUTE	KILOMETER POST TOTAL PROJECT	SHEET NO	TOTAL SHEETS
04	Ala	80	1.6/2.7	550 R1	643

REGISTERED ELECTRICAL ENGINEER — DATE 3/25/2005

1-29-07
PLANS APPROVAL DATE

REGISTERED PROFESSIONAL ENGINEER — JENS ERLINGSSON — No. 8249 — Exp. 9/30/08 — ELECTRICAL — STATE OF CALIFORNIA

PB POWER, Inc.
A Parsons Brinckerhoff Company
303 Second St., Suite 700N
San Francisco, CA 94107-1317

The State of California or its officers or agents shall not be responsible for the accuracy or completeness of electronic copies of this plan sheet.

To get to the Caltrans web site, go to http://www.dot.ca.gov

Caltrans Metric

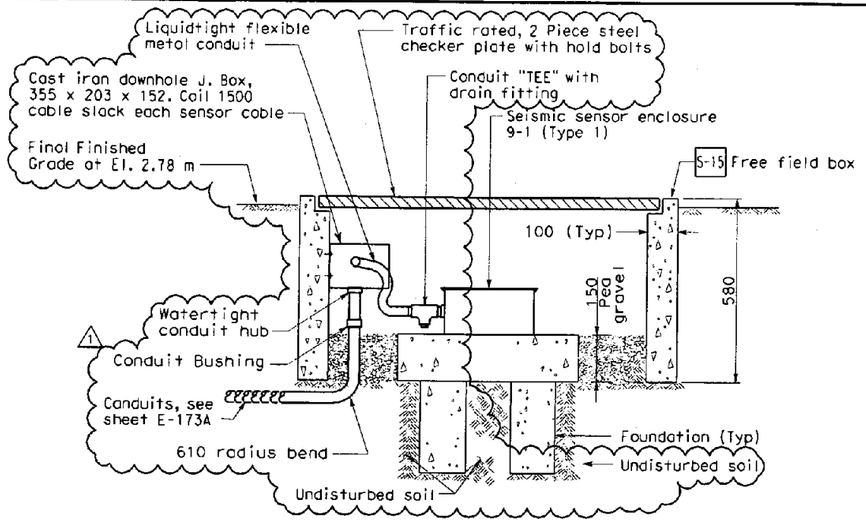

ELEVATION

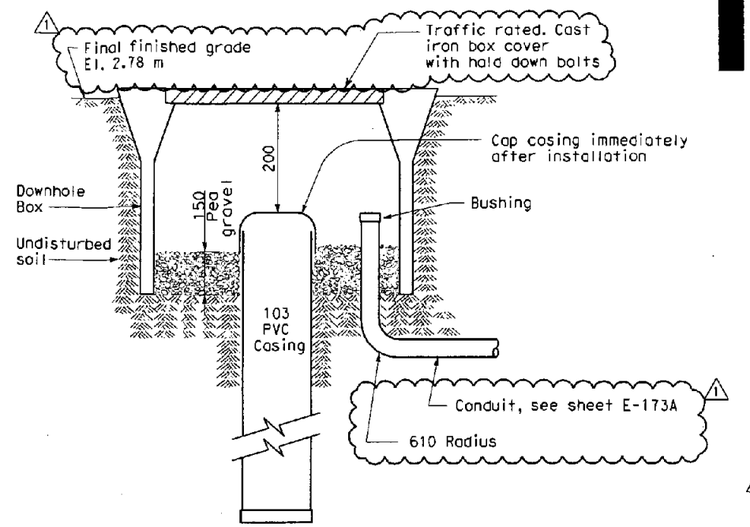

ELEVATION

NOTES:

1. Downhole sensor cables will be furnished and installed in conduit by CGS.
2. Coordinate the exact termination of 103 mm PVC casing with Caltrans office of Earthquake Engineering and CGS utilizing the P/S suspension logs provided by State forces.

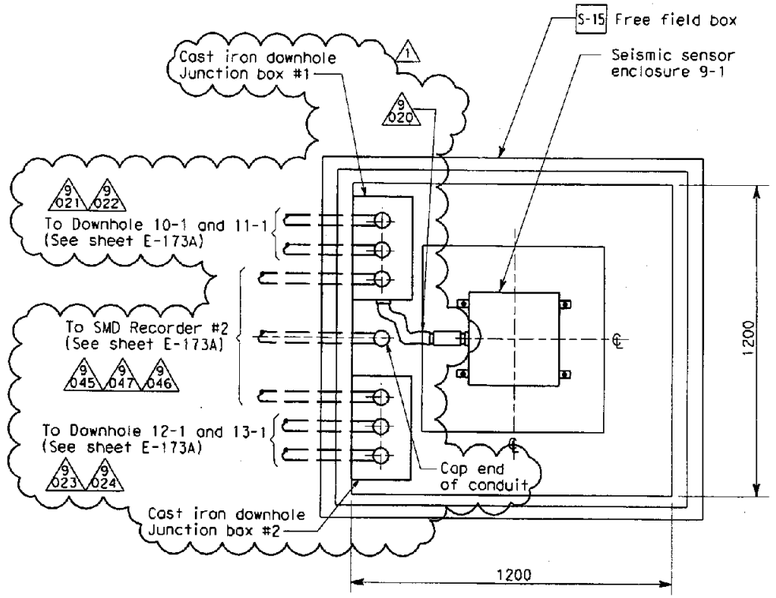

FREE FIELD MANHOLE PLAN - DETAIL 3

(SHOWN WITHOUT COVER)
NO SCALE

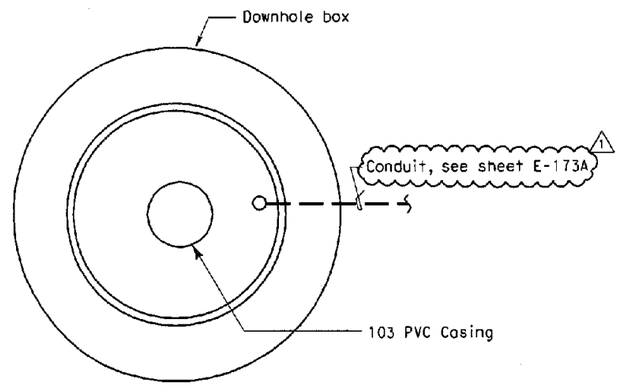

DOWNHOLE BOX PLAN - DETAIL 4

(SHOWN WITHOUT COVER)
NO SCALE

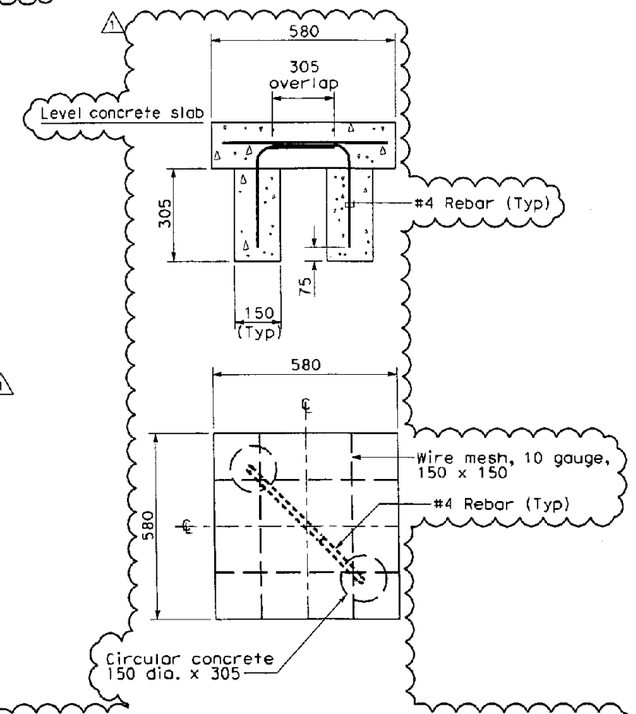

SEISMIC SENSOR FOUNDATION-DETAIL 5

NO SCALE

MARK	DATE	DESCRIPTIONS	REV	CK	CCO NO.
1	7/31/09	Revised Detail 3, 4 and elevation. Added Detail 5.	RSB	EJL	Geotech Arrays

REVISIONS

CONTRACT CHANGE ORDER NO. 128
SHEET 15 OF 25

DETAILS
STRONG MOTION DETECTION SYSTEM
FREE FIELD AND DOWNHOLE SENSORS

NO SCALE

E-179

ALL DIMENSIONS ARE IN MILLIMETERS UNLESS OTHERWISE SHOWN

FOR REDUCED PLANS ORIGINAL SCALE IS IN MILLIMETERS 0 20 40 60 80

DGN FILE => T:\13103\WS\pse\OTD-Contract 1\CCO\Electrical\CCO-Relocate Geotech arrays\401201ua179R1.dgn
USERNAME => ricafrente

CU 04251 | EA 012041

LAST REVISION 00-00-00 | DATE PLOTTED => 8/4/2009 | TIME PLOTTED => 3:15:03 PM

STATE OF CALIFORNIA - DEPARTMENT OF TRANSPORTATION
Caltrans

DESIGN OVERSIGHT: BEHZAD GOLEMOHAMMADI

CALCULATED/DESIGNED BY | CHECKED BY | DATE REVISED BY | DATE REVISED

DIST	COUNTY	ROUTE	KILOMETER POST TOTAL PROJECT	SHEET NO	TOTAL SHEETS
04	Ala	80	1.6/2.7	551A R0	643

REGISTERED ELECTRICAL ENGINEER DATE

PLANS APPROVAL DATE

REGISTERED PROFESSIONAL ENGINEER FADI WALIEDDINE No. 11465 Exp. 12/31/09 ELECTRICAL STATE OF CALIFORNIA

PB POWER, Inc.
A Parsons Brinckerhoff Company
303 Second St., Suite 700N
San Francisco, CA 94107-1317

The State of California or its officers or agents shall not be responsible for the accuracy or completeness of electronic copies of this plan sheet.

Caltrans now has a web site! To get to the web site, go to http://www.dot.ca.gov

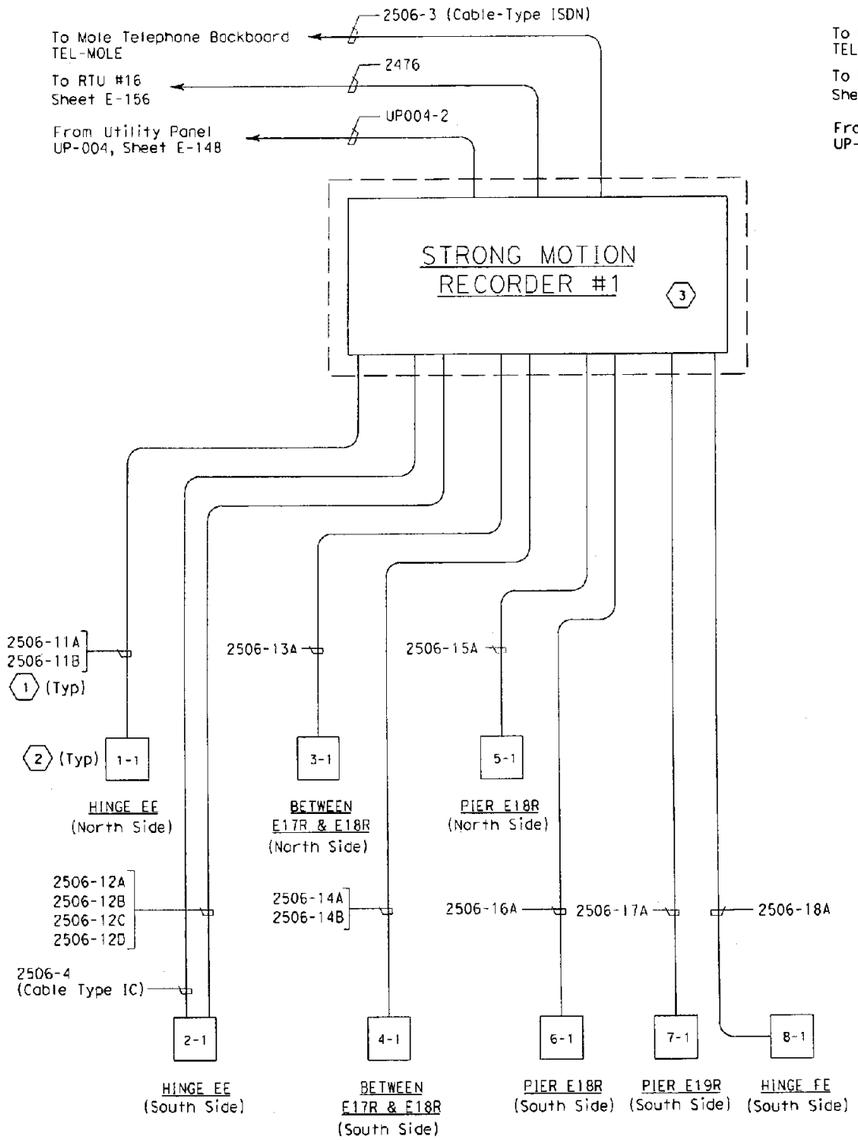

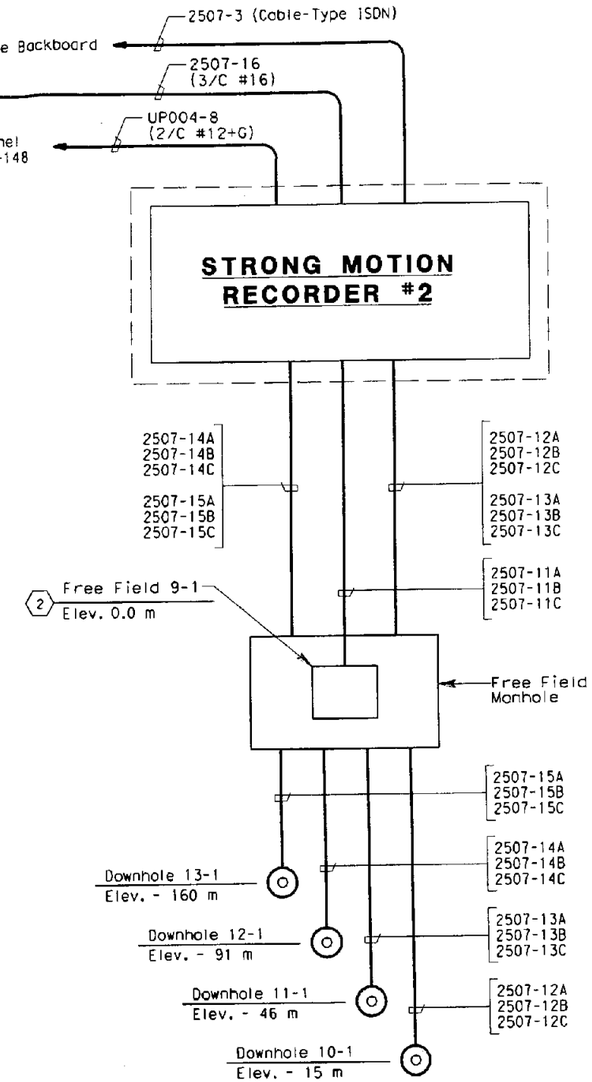

Downhole Arrays
East of Mole Substation

SHEET NOTES:

1. Strong motion sensor cables shall be type SSC, unless otherwise indicated.
2. Sensor enclosure with identification number as shown.
3. Strong Motion Recorder #1, installed by others.

NOTES:

1. References:
   - For the conduit and cable tray schedules, see sheets starting at E-224.
   - For Sensor and Recorder Schedule, see Sheet E-180.
   - For general notes of the Strong Motion Detection System, see Sheet E-173.

MARK	DATE	DESCRIPTIONS	REV	CK	CCO NO.
0	7/31/09	New drawing. Relocated downhole arrays. Moved and added seismic recorder #2 and enclosure.	RSB	EJL	Geotech Arrays

REVISIONS

CONTRACT CHANGE ORDER NO. 128
SHEET 16 OF 25

DETAILS
STRONG MOTION DETECTION SYSTEM CABLE BLOCK DIAGRAM
NO SCALE

E-180A

STATE OF CALIFORNIA - DEPARTMENT OF TRANSPORTATION
Caltrans

DESIGN OVERSIGHT: BEHZAD GOLEMOHAMMADI

CALCULATED/DESIGNED BY	AB	DATE	REVISED BY	DATE REVISED
CHECKED BY	FK			

LAST REVISION 00-00-00
DATE PLOTTED => 8/4/2009
TIME PLOTTED => 3:15:34 PM

FOR REDUCED PLANS ORIGINAL SCALE IS IN MILLIMETERS 0 20 40 60 80

DGN FILE =>T:\13103\MS\pse\OTD-Contract 1\CCO\Electrical\CCO-Relocate Geotech arrays\401201ud180A.dgn
USERNAME =>ricofrente

CU 04251 | EA 012041

DIST	COUNTY	ROUTE	KILOMETER POST TOTAL PROJECT	SHEET NO	TOTAL SHEETS
04	Ala	80	1.6/2.7	551 R1	643

REGISTERED ELECTRICAL ENGINEER 05/15/06 DATE

1-29-07
PLANS APPROVAL DATE

REGISTERED PROFESSIONAL ENGINEER JENS ERLINGSSON No. 8249 Exp. 9/30/08 ELECTRICAL STATE OF CALIFORNIA

PB POWER, Inc.
A Parsons Brinckerhoff Company
303 Second St., Suite 700N
San Francisco, CA 94107-1317

This State of California or its officers or agents shall not be responsible for the accuracy or completeness of electronic copies of this plan sheet.

To get to the Caltrans web site, go to http://www.dot.ca.gov

Caltrans Metric

STRONG MOTION DETECTION SYSTEM SENSOR SCHEDULE

Number of Sensors	Sensor Enclosure No.	Enclosure Type No.	Mounting Location	Location	Hinge Direction	Remarks
2	1-1	5	north face of north girder wall at base	Hinge EE East Side	Down	
3	2-1	4	south face of south girder wall at base	Hinge EE East side	Down	
1	3-1	2	north face of north girder wall at base	Midspan between pier E17R and E18R	Down	
2	4-1	3	south face of south girder wall at base	Midspan between pier E17R and E18R	West	
1	5-1	2	north face of north girder wall at base	Platform #22E Table	Down	
1	6-1	2	south face of south girder wall at base	Pier E18R	Down	
1	7-1	2	south face of south girder wall at base	Pier E19R	Down	
1	8-1	2	south face of south girder wall at base	Hinge FE West side	Down	
3	9-1	1	Approx 43 m East of Mole Substation	Elev. 00		~~CGS to determine exact location~~
3	10-1	Down hole Box	Approx 40 m East of Mole Substation	Elev. -15		~~CGS to determine exact location~~
3	11-1	Down hole Box	Approx 37 m East of Mole Substation	Elev. -46		~~CGS to determine exact location~~
3	12-1	Down hole Box	Approx 34 m East of Mole Substation	Elev. -91		~~CGS to determine exact location~~
3	13-1	Down hole Box	Approx 31 m East of Mole Substation	Elev. -160		~~CGS to determine exact location~~

1 1

STRONG MOTION DETECTION SYSTEM PULL BOX SCHEDULE

SIZE	EXTENSION	TYPE OF COVER: TRAFFIC	TYPE OF COVER: CONCRETE	COVER MARKING	REMARKS 1
Caltrans No. 6T	YES	YES	YES	SMD/LOW LEVEL SIGNAL	Caltrans Standard ES-8 Located at Pier E22R
Caltrans No. 6T	YES	YES	YES	SMD-PB/ 600V	Caltrans Standard ES-8 Located at Pier E22R
~~Caltrans No. 6~~	~~YES~~	~~YES~~	~~YES~~	~~SMD-PB #2~~	~~Caltrans Standard ES-8~~

NAMEPLATE SCHEDULE

ENCLOSURE TYPE	ENGRAVINGS: LINE NO. 1	ENGRAVINGS: LINE NO. 2	QUANTITY
1	STRONG MOTION SENSOR	ENCLOSURE NO. 9-1	1
2	STRONG MOTION SENSOR	ENCLOSURE NO. 7-1	1
	STRONG MOTION SENSOR	ENCLOSURE NO. 8-1	1
	STRONG MOTION SENSOR	ENCLOSURE NO. 3-1	1
	STRONG MOTION SENSOR	ENCLOSURE NO. 6-1	1
	STRONG MOTION SENSOR	ENCLOSURE NO. 5-1	1
3	STRONG MOTION SENSOR	ENCLOSURE NO. 4-1	1
4	STRONG MOTION SENSOR	ENCLOSURE NO. 2-1	1
5	STRONG MOTION SENSOR	ENCLOSURE NO. 1-1	1
1 Caltrans Type S	STRONG MOTION	RECORDER #1	1
Caltrans Type S	STRONG MOTION	RECORDER #2	1

NOTE:
1. Nameplates shall be mounted to the enclosure front panel with 4-40 stainless steel machine screws. The front cover to be drilled and tapped. (no self-tapping screws)
2. Nameplates shall be laminated phenalic plastic with white core and black front and back. Engravings shall be in capital 25mm high letters etched through the outer layer of the nameplate material.

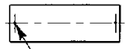

Clearance hole for 4-40 machine screw

NOTES:

1. References:
   - For enclosure types details, see sheets E-181
   - For general notes of the Strong Motion Detection System, see Sheet E-173.

REGISTERED PROFESSIONAL ENGINEER FADI WALIEDDINE No. 11465 Exp. 12/31/2009 ELECTRICAL STATE OF CALIFORNIA

MARK	DATE	DESCRIPTIONS	REV	CK	CCO NO.
1	7/31/09	Revised Sensor schedule and pull box schedule. Added nameplate schedule	RSB	EJL	Geotech Arrays

REVISIONS

CONTRACT CHANGE ORDER NO. 128
SHEET 17 OF 25

DETAILS
STRONG MOTION DETECTION SYSTEM SCHEDULES
NO SCALE

E-180

STATE OF CALIFORNIA - DEPARTMENT OF TRANSPORTATION
Caltrans

DESIGN OVERSIGHT: BEHZAD GOLEMOHAMMADI

CALCULATED/DESIGNED BY: KC — DATE 2/06 — REVISED BY
CHECKED BY: AB — 2/06 — DATE REVISED

LAST REVISION 00-00-00 — DATE PLOTTED => 8/4/2009 — TIME PLOTTED => 3:16:00 PM

FOR REDUCED PLANS ORIGINAL SCALE IS IN MILLIMETERS 0 20 40 60 80

DGN FILE =>T:\13103\MS\pse\OTD-Contract 1\CCO\Electrical\CCO-Relocate Geotech arrays\40120tud180r1.dgn
USERNAME =>ricafrente

CU 04251 | EA 0120L1

DIST	COUNTY	ROUTE	KILOMETER POST TOTAL PROJECT	SHEET No	TOTAL SHEETS
04	Ala	80	1.6/2.7	552 R1	643

REGISTERED ELECTRICAL ENGINEER 05/15/06 DATE

1-29-07
PLANS APPROVAL DATE

REGISTERED PROFESSIONAL ENGINEER JENS ERLINGSSON No. 8249 Exp. 9/30/08 ELECTRICAL STATE OF CALIFORNIA

PB POWER, Inc.
A Parsons Brinckerhoff Company
303 Second St., Suite 700N
San Francisco, CA 94107-1317

The State of California or its officers or agents shall not be responsible for the accuracy or completeness of electronic copies of this plan sheet.

To get to the Caltrans web site, go to http://www.dot.ca.gov

Caltrans Metric

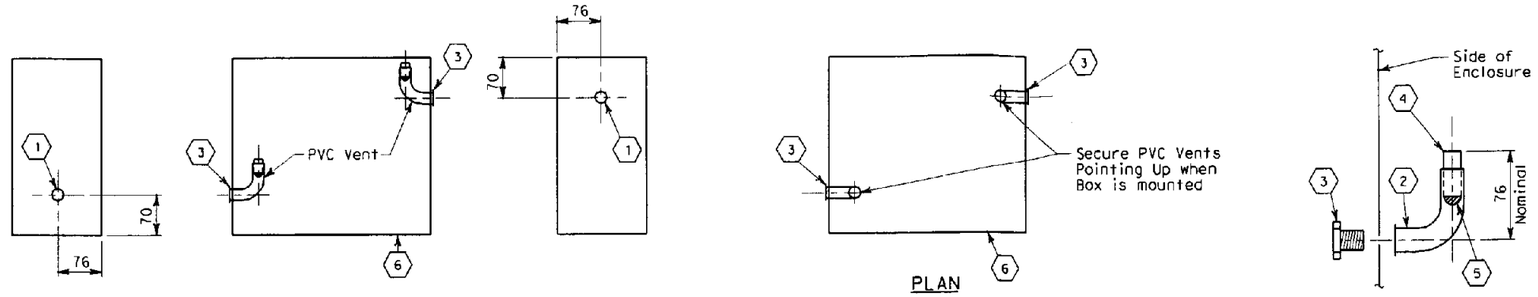

ENCLOSURE VENTING DETAIL
VERTICAL MOUNT

ENCLOSURE VENTING DETAIL
HORIZONTAL MOUNT

PVC VENT DETAIL

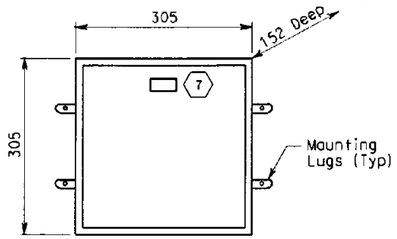

TYPE 1
CAST METAL BOX

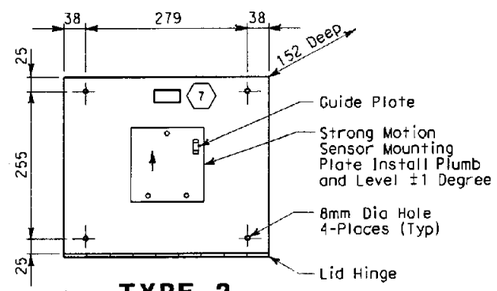

TYPE 2
STAINLESS STEEL BOX (NEMA 4X)

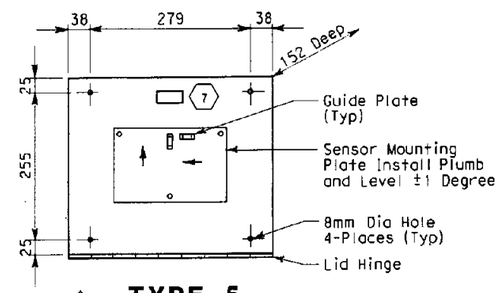

TYPE 5
STAINLESS STEEL BOX (NEMA 4X)

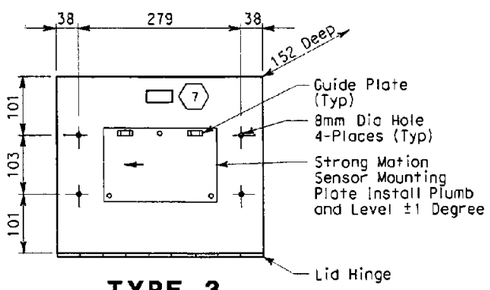

TYPE 3
STAINLESS STEEL BOX (NEMA 4X)

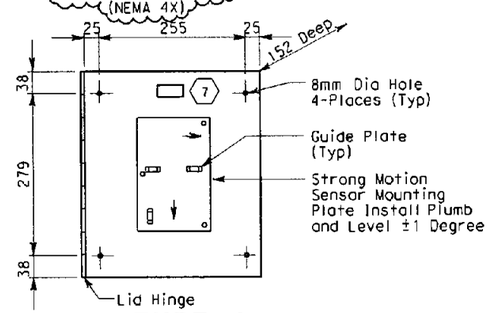

TYPE 4
STAINLESS STEEL BOX (NEMA 4X)

ENCLOSURE DETAILS
FRONT VIEW

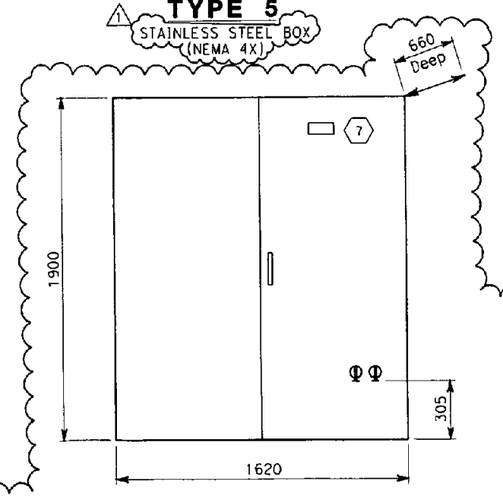

STRONG MOTION RECORDER ENCLOSURE
CALTRANS TYPE S

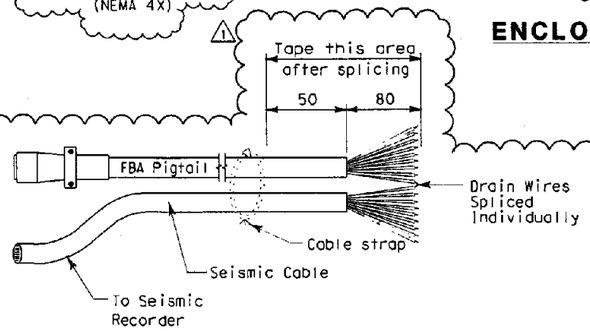

PIGTAIL SPLICING DETAIL
(THIS DETAIL IS APPLICABLE TO CABLE TYPES IC AND SSC IN ALL STRONG MOTION SENSOR ENCLOSURES)

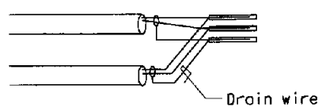

SPLICING DETAIL
1 PAIR SPLICED

SHEET NOTES:

1.]Punch hole for 27C.
2. 27C, schedule 40 PVC, 90° elbow (female threaded-female slip).
3. 27 chase nipple, zinc.
4. 27C. schedule 40 PVC. Secure item in place with PVC cement (length as required, cut after installation).
5. Hose screen, Stainless steel screen material (used in washing machine).
6. 3.2 mm diameter drain hole. Drill at the lowest point of the box to drain any moisture.
7. See nameplate schedule for engravings on sheet E-180.

NOTES:

1. The high and low vent sides shall be selected as required to facilitate conduit entrances and mounting location.
2. Strong motion sensor enclosures and mounting plates shall be installed level, plumb (+/-1°), parallel and perpendicular to the structure unless otherwise noted.
3. Strong motion enclosures shall be mounted to concrete wall with concrete fasteners, 6.35 mm dia, 40 mm depth embedment and allowable working load of tension at 1.223 kN and shear 2.91 kN. All hardware shall be stainless steel.

PIGTAIL SPLICING INSTRUCTIONS:

1. Strip outer jacket cables back 80mm.
2. Separate individual conductors and drain wires and splice matching colored wires and drain wires using jelly filled splice connectors and crimping tool.
3. Secure cables with cable straps approximately 50mm from end of outer jacket.
4. Tape from cable strap to splice with vinyl electrical tape (3M Scotch Super 88 or equal). Tape should cover all splices. Coat with sealing compound or equal, then tape with self- fusing tape and an outer layer of vinyl electrical tape.

Note: Insure crimps are secure before taping.

MARK	DATE	DESCRIPTIONS	REV	CK	CCO NO.
1	7/31/09	Added strong motion recorder, pigtail splicing details and notes for pigtail splicing instructions. Changed type of box.	RSB	EJL	Geotech Arrays

REVISIONS

REGISTERED PROFESSIONAL ENGINEER FADI WALIEDDINE No. 11465 Exp. 12/31/2009 ELECTRICAL STATE OF CALIFORNIA

CONTRACT CHANGE ORDER NO. 128
SHEET 18 OF 25

DETAILS
STRONG MOTION DETECTION SYSTEM SENSOR AND RECORDER ENCLOSURES
NO SCALE

E-181

CALCULATED/ DESIGNED BY	KC	DATE 2/06	REVISED BY
CHECKED BY	AB	2/06	DATE REVISED

DESIGN OVERSIGHT: BEHZAD GOLEMOHAMMADI

STATE OF CALIFORNIA - DEPARTMENT OF TRANSPORTATION
Caltrans

FOR REDUCED PLANS ORIGINAL SCALE IS IN MILLIMETERS 0 20 40 60 80

DGN FILE =>t:\13103\MS\pse\OTO-Contract 1\CCO\Electrical\CCO-Relocate Geotech arrays\401201ud181r1.dgn
USERNAME =>contiller

CU 04251 | EA 0120L1

LAST REVISION 00-00-00 | DATE PLOTTED => 8/26/2009 | TIME PLOTTED => 7:53:59 AM

DIST	COUNTY	ROUTE	KILOMETER POST TOTAL PROJECT	SHEET NO	TOTAL SHEETS
04	Ala	80	1.6/2.7	590 R2	643

REGISTERED ELECTRICAL ENGINEER 05/15/06 DATE

1-29-07
PLANS APPROVAL DATE

REGISTERED PROFESSIONAL ENGINEER JENS ERLINGSSON No. 8249 Exp. 9/30/08 ELECTRICAL STATE OF CALIFORNIA

PB POWER, Inc.
A Parsons Brinckerhoff Company
303 Second St., Suite 700N
San Francisco, CA 94107-1317

The State of California or its officers or agents shall not be responsible for the accuracy or completeness of electronic copies of this plan sheet.

To get to the Caltrans web site, go to: http://www.dot.ca.gov

REGISTERED PROFESSIONAL ENGINEER FADI WALIEDDINE No. 11465 Exp. 12/31/2009 ELECTRICAL STATE OF CALIFORNIA

1 2

Caltrans Metric

CONDUIT DATA

MOLE SUBSTATION

Conduit No.	Reference	Size	Type	Total Fill (mm²)	Allowable Fill (mm²)	Cable Area (mm²)	Included Cable No.	Conductor Type
601	E-124	103	RGS conduit	0.00	3324.51	0.00	Pull Rope 1	Soft-Fiber Polyester
602	E-124	78	RGS conduit	0.00	1935.24	0.00	Pull Rope 1	Soft-Fiber Polyester
603	E-124	78	RGS conduit	0.00	1935.24	0.00	Pull Rope 1	Soft-Fiber Polyester
604	E-124	78	RGS conduit	0.00	1935.24	0.00	Pull Rope 1	Soft-Fiber Polyester
605	E-124	78	RGS conduit	0.00	1935.24	0.00	Pull Rope 1	Soft-Fiber Polyester
606	E-124	78	RGS conduit	0.00	1935.24	0.00	Pull Rope 1	Soft-Fiber Polyester
607	E-124	78	RGS conduit	0.00	1935.24	0.00	Pull Rope 1	Soft-Fiber Polyester
608	E-124	78	RGS conduit	1514.04	1935.24	1514.04	2711-A	3+1gnd, 350 kcmil, #1/0, 600 V, RHH/RHW
						0.00	Pull Rope 1	Soft-Fiber Polyester
609	E-124	78	RGS conduit	1514.04	1935.24	0.00	Pull Rope 1	Soft-Fiber Polyester
						1514.04	2711-B	3+1gnd, 350 kcmil, #1/0, 600 V, RHH/RHW
610	E-124	78	RGS conduit	1514.04	1935.24	1514.04	1711-A	3+1gnd, 350 kcmil, #1/0, 600 V, RHH/RHW
						0.00	Pull Rope 1	Soft-Fiber Polyester
611	E-124	78	RGS conduit	1514.04	1935.24	1514.04	1711-B	3+1gnd, 350 kcmil, #1/0, 600 V, RHH/RHW
						0.00	Pull Rope 1	Soft-Fiber Polyester
612	E-124	78	RGS conduit	0.00	1935.24	0.00	Pull Rope 1	Soft-Fiber Polyester
613	E-124	78	RGS conduit	1055.60	~~1499.81~~	527.18	1632	1-3/C+gnd #2, 600 V, EPR insulation
						527.18	1631	1-3/C+gnd #2, 600 V, EPR insulation 2
						0.00	Pull Rope 1	Soft-Fiber Polyester
614	E-124	78	RGS conduit	147.76	2564.19	147.76	1621	1-3/C+gnd #10, 600 V, EPR insulation
						0.00	Pull Rope 1	Soft-Fiber Polyester
615	E-124	78	RGS conduit	0.00	1935.24	0.00	Pull Rope 1	Soft-Fiber Polyester
616	E-124	78	RGS conduit	732.20	1499.81	366.10	1626	1-3/C+gnd #4, 600 V, EPR insulation
						366.10	1627	1-3/C+gnd #4, 600 V, EPR insulation
						0.00	Pull Rope 1	Soft-Fiber Polyester
617	E-124	78	RGS conduit	972.87	1935.24	324.29	S-1601	1-3/C+gnd #6, 600 V, EPR insulation
						0.00	Pull Rope 1	Soft-Fiber Polyester
						324.29	S-1602	1-3/C+gnd #6, 600 V, EPR insulation
						324.29	A-1005	1-3/C+gnd #6, 600 V, EPR insulation
618	E-124	78	RGS conduit	233.50	1499.81	116.75	1635	1-3/C+gnd #12, 600 V, EPR insulation
						116.75	1637	1-3/C+gnd #12, 600 V, EPR insulation
						0.00	Pull Rope 1	Soft-Fiber Polyester
619	E-124	78	RGS conduit	849.65	1935.24	0.00	Pull Rope 1	Soft-Fiber Polyester
			1		1	262.68	A-1006	1-3/C + gnd #8, 600 V, EPR insulation
						262.68	A-1007	1-3/C + gnd #8, 600 V, EPR insulation
						324.29	A-1008	1-3/C + gnd #6, 600 V, EPR insulation
620	E-124	78	RGS conduit	0.00	1935.24	0.00	Pull Rope 1	Soft-Fiber Polyester
621	E-124, E-151	41	RGS conduit	527.18	~~708.28~~	0.00	Pull Rope 1	Soft-Fiber Polyester
						527.18	1632	1-3/C+gnd #2, 600 V, EPR insulation 2
622	E-124, E-151	41	RGS conduit	469.06	534.55	0.00	Pull Rope 1	Soft-Fiber Polyester
						469.06	1632-1	4+1gnd #2, #6, 600 V, RHH/RHW insulation
623	E-124, E-151	78	RGS conduit	380.08	1935.24	0.00	Pull Rope 1	Soft-Fiber Polyester
						277.47	UP004-3	1-2/C+gnd #6, 600 V, EPR insulation
				2		102.61	UP004-8	1-2/C+gnd #12, 600 V, EPR insulation
624	E-124, E-151	53	RGS conduit	527.18	~~1165.23~~	0.00	Pull Rope 1	Soft-Fiber Polyester
						527.18	1631	1-3/C+gnd #2, 600 V, EPR insulation 2
625	E-124, E-151	41	RGS conduit	205.22	414.28	0.00	Pull Rope 1	Soft-Fiber Polyester
						205.22	1651-2	2-1/C #2, 600 V, RHH/RHW insulation
626	E-124	41	RGS conduit	205.22	414.28	205.22	1651-3	2-1/C #2, 600 V, RHH/RHW insulation
						0.00	Pull Rope 1	Soft-Fiber Polyester
627	E-124, E-151	103	RGS conduit	205.22	2576.49	205.22	1651-1	2-1/C #2, 600 V, RHH/RHW insulation
						0.00	Pull Rope 1	Soft-Fiber Polyester
628	E-124	78	RGS conduit	1514.04	1935.24	1514.04	1711-A	3+1gnd, 350 kcmil, #1/0, 600 V, RHH/RHW
						0.00	Pull Rope 1	Soft-Fiber Polyester
629	E-124	78	RGS conduit	1514.04	1935.24	0.00	Pull Rope 1	Soft-Fiber Polyester
						1514.04	1711-B	3+1gnd, 350 kcmil, #1/0, 600 V, RHH/RHW
630	E-124	78	RGS conduit	1514.04	1935.24	0.00	Pull Rope 1	Soft-Fiber Polyester
						1514.04	2711-A	3+1gnd, 350 kcmil, #1/0, 600 V, RHH/RHW
631	E-124	78	RGS conduit	1514.04	1935.24	1514.04	2711-B	3+1gnd, 350 kcmil, #1/0, 600 V, RHH/RHW
						0.00	Pull Rope 1	Soft-Fiber Polyester

CONDUIT DATA

MOLE SUBSTATION

Conduit No.	Reference	Size	Type	Total Fill (mm²)	Allowable Fill (mm²)	Cable Area (mm²)	Included Cable No.	Conductor Type
632	E-124	78	RGS conduit	1514.04	1935.24	1514.04	1707	3+1gnd, 350 kcmil, #1/0, 600 V, RHH/RHW
						0.00	Pull Rope 1	Soft-Fiber Polyester
637	E-124, E-151	53	RGS conduit	507.52	879.42	126.88	DPA-5/7	1-3/C #10, 600 V, EPR insulation
						126.88	DPA-2/4	1-3/C #10, 600 V, EPR insulation
						126.88	DPA-6/8	1-3/C #10, 600 V, EPR insulation
						0.00	Pull Rope 1	Soft-Fiber Polyester
						126.88	DPA-1/3	1-3/C #10, 600 V, EPR insulation
638	E-124	53	RGS conduit	253.76	681.55	0.00	Pull Rope 1	Soft-Fiber Polyester
						126.88	DPA-6/8	1-3/C #10, 600 V, EPR insulation
						126.88	DPA-2/4	1-3/C #10, 600 V, EPR insulation
639	E-124	53	RGS conduit	253.76	681.55	126.88	DPA-5/7	1-3/C #10, 600 V, EPR insulation
						126.88	DPA-1/3	1-3/C #10, 600 V, EPR insulation
						0.00	Pull Rope 1	Soft-Fiber Polyester
642	E-124, E-151	53	RGS conduit	469.06	879.42	0.00	Pull Rope 1	Soft-Fiber Polyester
						469.06	1631-1	4+1gnd #2, #6, 600 V, RHH/RHW insulation
647	E-124	78	RGS conduit	1514.04	1935.24	0.00	Pull Rope 1	Soft-Fiber Polyester
						1514.04	1707	3+1gnd, 350 kcmil, #1/0, 600 V, RHH/RHW
648	E-124	53	RGS conduit	178.82	681.55	0.00	Pull Rope 1	Soft-Fiber Polyester
						116.75	1707-1	1-5/C #14, 600 V, EPR insulation
						62.07	1707-2	1-3/C #16, 600 V, EPR insulation
649	E-124	53	RGS conduit	147.76	1165.23	147.76	1621	1-3/C+gnd #10 ,600 V, EPR insulation
						0.00	Pull Rope 1	Soft-Fiber Polyester
650	E-124	53	RGS conduit	147.76	1165.23	147.76	1621-1	1-3/C+gnd #10 ,600 V, EPR insulation
						0.00	Pull Rope 1	Soft-Fiber Polyester
651	E-124, E-151	103	RGS conduit	2403.42	2576.49	1201.71	2473-27	50 pair #18, shielded pairs, IS/OS shield 600 V, XLPE insul., PVC jacket
						1201.71	1473-26	50 pair #18, shielded pairs, IS/OS shield 600 V, XLPE insul., PVC jacket
						0.00	Pull Rope 1	Soft-Fiber Polyester
652	E-124, E-151	103	RGS conduit	121.74	3324.51	0.00	Pull Rope 1	Soft-Fiber Polyester
					2	121.74	2507-3	4 pair #22, shielded pairs, 300 V, PE insulation (ISDN cable)
653	E-124, E-151	103	RGS conduit	2403.42	2576.49	1201.71	2474-27	50 pair #18, shielded pairs, IS/OS shield 600 V, XLPE insul., PVC jacket
						1201.71	1474-26	50 pair #18, shielded pairs, IS/OS shield 600 V, XLPE insul., PVC jacket
						0.00	Pull Rope 1	Soft-Fiber Polyester
654	E-124, E-151	103	RGS conduit	0.00	3324.51	0.00	Pull Rope 1	Soft-Fiber Polyester
655	E-124	53	RGS conduit	62.07	1165.23	0.00	Pull Rope 1	Soft-Fiber Polyester
						62.07	1621-2	1-3/C #16, 600 V, EPR insulation
656	E-124, E-151	41	RGS conduit	196.20	414.28	98.10	1804	1 - 2 pair, shielded #18 with IS/OA, 600 V, PVC
						0.00	Pull Rope 1	Soft-Fiber Polyester
						98.10	1803	1 - 2 pair, shielded #18 with IS/OA, 600 V, PVC
657	E-124, E-151	53	RGS conduit	0.00	879.42	0.00	Pull Rope 1	Soft-Fiber Polyester
701	E-124	78	RGS conduit	0.00	1935.24	0.00	Pull Rope 1	Soft-Fiber Polyester

For continuation, see next sheet.

MARK	DATE	DESCRIPTIONS	REV	CK	CCO NO.
2	7/31/09	Added cables to conduits 623 and 652. Changed cable size to conduits 613, 621, and 624.	RSB	EJL	Geotech Arrays
1	8/29/08	Added cable/ckts A-1006, A-1007 A-1008.	JH	EJL	Light Pipe

REVISIONS

CONTRACT CHANGE ORDER NO. 128
SHEET 19 OF 25

DETAILS
CONDUIT AND TRAY SCHEDULE

E-237

DESIGN OVERSIGHT: BEHZAD GOLEMOHAMMADI

CALCULATED/DESIGNED BY: FK | DATE 2/06 | REVISED BY
CHECKED BY: AB | 2/06 | DATE REVISED

STATE OF CALIFORNIA - DEPARTMENT OF TRANSPORTATION
Caltrans

FOR REDUCED PLANS ORIGINAL SCALE IS IN MILLIMETERS 0 20 40 60 80

DGN FILE =>T:\13103\MS\pse\OTD-Contract 1\CCO\Electrical\CCO-Re
USERNAME =>ricafrente
ocate Geotech arrays\401201cd237r2.dgn
CU 04251 | EA 0120L1

LAST REVISION 00-00-00
DATE PLOTTED => 8/4/2009
TIME PLOTTED => 3:16:56 PM

DIST	COUNTY	ROUTE	KILOMETER POST TOTAL PROJECT	SHEET No	TOTAL SHEETS
04	Ala	80	1.6/2.7	592 R2	643

REGISTERED ELECTRICAL ENGINEER 05/15/06 DATE

1-29-07
PLANS APPROVAL DATE

REGISTERED PROFESSIONAL ENGINEER JENS ERLINGSSON No. 8249 Exp. 9/30/08 ELECTRICAL STATE OF CALIFORNIA

PB POWER, inc.
A Parsons Brinckerhoff Company
303 Second St., Suite 700N
San Francisco, CA 94107-1317

The State of California or its officers or agents shall not be responsible for the accuracy or completeness of electronic copies of this plan sheet.

To get to the Caltrans web site, go to http://www.dot.ca.gov

REGISTERED PROFESSIONAL ENGINEER FADI WALIEDDINE No. 11465 Exp. 12/31/2009 ELECTRICAL STATE OF CALIFORNIA

1 2

Caltrans Metric

CONDUIT DATA

MOLE SUBSTATION

Conduit No.	Reference	Size	Type	Total Fill (mm²)	Allowable Fill (mm²)	Cable Area (mm²)	Included Cable No.	Conductor Type
731	E-124, E-151	103	RGS conduit	339.54	2576.49	0.00	Pull Rope 1	Soft-Fiber Polyester
						62.07	1651-4	1-3/C #16, 600 V, EPR insulation
						277.47	UP004-3	1-2/C+gnd #6, 600 V, EPR insulation
734	E-124	78	RGS conduit	62.07 2	2564.19	0.00	Pull Rope 1	Soft-Fiber Polyester
						62.07	1706-2	1-3/C #16, 600 V, EPR insulation
735	E-124	53	RGS conduit	62.07	1165.23	0.00	Pull Rope 1	Soft-Fiber Polyester
						62.07	2507-16	1-3/C #16, 600 V, EPR insulation
737	E-124	53	RGS conduit	0.00	879.42	0.00	Pull Rope 1	Soft-Fiber Polyester
738	E-124	78	RGS conduit	205.22	1499.81	102.61	UP004-9	1-2/C+gnd #12, 600 V, EPR insulation
						0.00	Pull Rope 1	Soft-Fiber Polyester
						102.61	UP004-11	1-2/C+gnd #12, 600 V, EPR insulation
T20	E-124	610	152 mm siderail ladder	4966.21 2	16674.16	142.33	1705-2	1-5/C #12, 600 V, EPR insulation
						188.55	1704-3	1-12/C #16, 600 V, EPR insulation
						142.33	1703-2	1-5/C #12, 600 V, EPR insulation
						188.55	1703-3	1-12/C #16, 600 V, EPR insulation
						142.33	1702-2	1-5/C #12, 600 V, EPR insulation
						188.55	1702-3	1-12/C #16, 600 V, EPR insulation
						62.07	1702-5	1-3/C #16, 600 V, EPR insulation
						62.07	1706-2	1-3/C #16, 600 V, EPR insulation
						147.76	1621	1-3/C+gnd #10, 600 V, EPR insulation
						116.75	1707-1	1-5/C #14, 600 V, EPR insulation
						62.07	1621-2	1-3/C #16, 600 V, EPR insulation
						85.18	1472	1-3/C #14, 600 V, EPR insulation
						316.24	1705-3	1-12/C #12, 600 V, EPR insulation
						102.61	UP004-9	1-2/C+gnd #12, 600 V, EPR insulation
						102.61	UP004-11	1-2/C+gnd #12, 600 V, EPR insulation
						62.07	1651-4	1-3/C #16, 600 V, EPR insulation
						116.75	1637	1-3/C+gnd #12, 600 V, EPR insulation
					86.37 total dia.	.00	1707	3+1gnd, 350 kcmil, #1/0, 600 V, RHH/RHW Insulation
						142.33	1701-2	1-5/C #12, 600 V, EPR insulation
						62.07	1707-2	1-3/C #16, 600 V, EPR insulation
						137.01	1711-1	1-7/C #14, 600 V, EPR insulation
						137.01	2711-1	1-7/C #14, 600 V, EPR insulation
						142.33	1704-2	1-5/C #12, 600 V, EPR insulation
						137.01	2711-11	1-9/C #16, 600 V, EPR insulation
						137.01	2711-3	1-7/C #14, 600 V, EPR insulation
						137.01	1711-2	1-7/C #14, 600 V, EPR insulation
						137.01	1711-3	1-7/C #14, 600 V, EPR insulation
						85.18	1711-10	1-3/C #14, 600 V, EPR insulation
						137.01	1711-11	1-9/C #16, 600 V, EPR insulation
						137.01	1711-13	1-9/C #16, 600 V, EPR insulation
						137.01	1711-14	1-9/C #16, 600 V, EPR insulation
						188.55	1701-3	1-12/C #16, 600 V, EPR insulation
						137.01	2711-12	1-9/C #16, 600 V, EPR insulation
						188.55	2711-13	1-12/C #16, 600 V, EPR insulation
						137.01	2711-14	1-9/C #16, 600 V, EPR insulation
						137.01	2711-2	1-7/C #14, 600 V, EPR insulation
						137.01	1711-12	1-9/C #16, 600 V, EPR insulation
						85.18	2711-10	1-3/C #14, 600 V, EPR insulation
					2	62.07	2507-16	1-3/C #16, 600 V, EPR insulation
T21	E-124	910	152 mm siderail ladder	3544.95	25161.24	527.18	1632	1-3/C+gnd #2, 600 V, EPR insulation
						188.55	1705-3	1-12/C #16, 600 V, EPR insulation
						142.33	1705-2	1-5/C #12, 600 V, EPR insulation
						188.55	1702-3	1-12/C #16, 600 V, EPR insulation
						62.07	1702-5	1-3/C #16, 600 V, EPR insulation
						62.07	1706-2	1-3/C #16, 600 V, EPR insulation
						102.61	UP004-9	1-2/C+gnd #12, 600 V, EPR insulation
						62.07	1651-4	1-3/C #16, 600 V, EPR insulation
					86.37 total dia.	.00	1711-A	3+1gnd, 350 kcmil, #1/0, 600 V, RHH/RHW Insulation
						126.88	UP004-10	1-2/C+gnd #10, 600 V, EPR insulation
					86.37 total dia.	.00	1711-B	3+1gnd, 350 kcmil, #1/0, 600 V, RHH/RHW Insulation
						142.33	1703-2	1-5/C #12, 600 V, EPR insulation
						126.88	UP004-12	1-2/C+gnd #10, 600 V, EPR insulation
					86.37 total dia.	.00	2711-A	3+1gnd, 350 kcmil, #1/0, 600 V, RHH/RHW Insulation
						316.24	1705-3	1-12/C #12, 600 V, EPR insulation
						188.55	1704-3	1-12/C #16, 600 V, EPR insulation
						102.61	UP004-11	1-2/C+gnd #12, 600 V, EPR insulation
					86.37 total dia.	.00	2711-B	3+1gnd, 350 kcmil, #1/0, 600 V, RHH/RHW Insulation
						142.33	1701-2	1-5/C #12, 600 V, EPR insulation
						188.55	1701-3	1-12/C #16, 600 V, EPR insulation
						142.33	1704-2	1-5/C #12, 600 V, EPR insulation
					86.37 total dia.	.00	1707	3+1gnd, 350 kcmil, #1/0, 600 V, RHH/RHW Insulation
						527.18	1631	1-3/C+gnd #2, 600 V, EPR insulation 2
						142.33	1702-2	1-5/C #12, 600 V, EPR insulation
					2	62.07	2507-16	1-3/C #16, 600 V, EPR insulation

NOTES:

1. Circuits 1707, 1711-A, 1711-B, 2711-A and 2711-B routed inside cable trays shall be arranged in one level. No other cables shall be placed on them.

CONDUIT DATA

MOLE SUBSTATION

Conduit No.	Reference	Size	Type	Total Fill (mm²)	Allowable Fill (mm²)	Cable Area (mm²)	Included Cable No.	Conductor Type
T22	E-124	910	152 mm siderail ladder	6056.70 1 2	26675.42	116.75	1637	1-3/C+gnd #12, 600 V, EPR insulation
						324.29	A-1005	1-3/C+gnd #6, 600 V, EPR insulation
						324.29	S-1602	1-3/C+gnd #6, 600 V, EPR insulation
					86.37 total dia.	.00	1711-A	3+1gnd, 350 kcmil, #1/0, 600 V, RHH/RHW Insulation
					86.37 total dia.	.00	1711-B	3+1gnd, 350 kcmil, #1/0, 600 V, RHH/RHW Insulation
						126.88	UP004-10	1-2/C+gnd #10, 600 V, EPR insulation
						126.88	UP004-12	1-2/C+gnd #10, 600 V, EPR insulation
						102.61	UP004-11	1-2/C+gnd #12, 600 V, EPR insulation
						324.29	S-1601	1-3/C+gnd #6, 600 V, EPR insulation
						116.75	1635	1-3/C+gnd #12, 600 V, EPR insulation
						137.01	2711-3	1-7/C #14, 600 V, EPR insulation
						85.18	1472	1-3/C #14, 600 V, EPR insulation
						116.75	1634	1-3/C+gnd #12, 600 V, EPR insulation
						137.01	2711-12	1-9/C #16, 600 V, EPR insulation
						85.18	2711-10	1-3/C #14, 600 V, EPR insulation
						137.01	2711-11	1-9/C #16, 600 V, EPR insulation
					86.37 total dia.	.00	2711-A	3+1gnd, 350 kcmil, #1/0, 600 V, RHH/RHW Insulation
					86.37 total dia.	.00	2711-B	3+1gnd, 350 kcmil, #1/0, 600 V, RHH/RHW Insulation
						137.01	1711-11	1-9/C #16, 600 V, EPR insulation
						366.10	1626	1-3/C+gnd #4, 600 V, EPR insulation
						137.01	1711-13	1-9/C #16, 600 V, EPR insulation
						147.76	1621	1-3/C+gnd #10, 600 V, EPR insulation
						188.55	2711-13	1-12/C #16, 600 V, EPR insulation
						137.01	2711-14	1-9/C #16, 600 V, EPR insulation
					2	137.01	2711-2	1-7/C #14, 600 V, EPR insulation
					2	527.18	1632	1-3/C+gnd #2, 600 V, EPR insulation
					2	366.10	1625	1-3/C+gnd #4, 600 V, EPR insulation
						527.18	1631	1-3/C+gnd #2, 600 V, EPR insulation
						137.01	1711-12	1-9/C #16, 600 V, EPR insulation
						137.01	2711-1	1-7/C #14, 600 V, EPR insulation
					1	262.68	A-1006	1-3/C + gnd #8, 600 V, EPR insulation
						262.68	A-1007	1-3/C + gnd #8, 600 V, EPR insulation
						324.29	A-1008	1-3/C + gnd #6, 600 V, EPR insulation
T23	E-124	610	152 mm siderail ladder 1	2935.47	16774.16	85.18	1472	1-3/C #14, 600 V, EPR insulation
						116.75	1635	1-3/C+gnd #12, 600 V, EPR insulation
						116.75	1634	1-3/C+gnd #12, 600 V, EPR insulation
						324.29	A-1005	1-3/C+gnd #6, 600 V, EPR insulation
						324.29	S-1602	1-3/C+gnd #6, 600 V, EPR insulation
						324.29	S-1601	1-3/C+gnd #6, 600 V, EPR insulation
						366.10	1627	1-3/C+gnd #4, 600 V, EPR insulation
						366.10	1626	1-3/C+gnd #4, 600 V, EPR insulation
					1	262.68	A-1006	1-3/C + gnd #8, 600 V, EPR insulation
						262.68	A-1007	1-3/C + gnd #8, 600 V, EPR insulation
						324.29	A-1008	1-3/C + gnd #6, 600 V, EPR insulation
T24	E-124, E-150, E-151	610	152 mm siderail ladder 1	2719.40 2	16774.16	366.10	1627	1-3/C+gnd #4, 600 V, EPR insulation
						366.10	1626	1-3/C+gnd #4, 600 V, EPR insulation
						324.29	A-1005	1-3/C+gnd #6, 600 V, EPR insulation
						324.29	S-1602	1-3/C+gnd #6, 600 V, EPR insulation
						324.29	S-1601	1-3/C+gnd #6, 600 V, EPR insulation
					1	262.68	A-1006	1-3/C + gnd #8, 600 V, EPR insulation
						262.68	A-1007	1-3/C + gnd #8, 600 V, EPR insulation
					2	324.29	A-1008	1-3/C + gnd #6, 600 V, EPR insulation
						102.61	UP004-8	1-2/C+gnd #12, 600 V, EPR insulation
						62.07	2507-16	1-3/C #16, 600 V, EPR insulation

For continuation, see next sheet.

MARK	DATE	DESCRIPTIONS	REV	CK	CCO NO.
2	7/31/09	Added cables to conduits 735, T20, T21 and T24. Changed cable sizes to conduits T21, T22.	RSB	EJL	Geotech Arrays
1	8/29/08	Added cable/ckts A-1006, A-1007, A-1008	JH	EJL	Light Pipe

REVISIONS

CONTRACT CHANGE ORDER NO. 128
SHEET 20 OF 25

DETAILS
CONDUIT AND TRAY SCHEDULE

E-239

DESIGN OVERSIGHT	CALCULATED/DESIGNED BY	CHECKED BY	REVISED BY	DATE REVISED
BEHZAD GOLEMOHAMMADI	FK	AB	DATE 2/06	DATE 2/06

STATE OF CALIFORNIA - DEPARTMENT OF TRANSPORTATION
Caltrans

LAST REVISION 00-00-00

DATE PLOTTED => 8/4/2009
TIME PLOTTED => 3:17:23 PM

FOR REDUCED PLANS ORIGINAL SCALE IS IN MILLIMETERS 0 20 40 60 80

DGN FILE =>T:\13103\MS\pse\OTD-Contract 1\CCO\Electrical\CCO-Relocate Geotech arrays\401201ug239r2.dgn
USERNAME =>ricafrente

CU 04251 EA 0120L1

DIST	COUNTY	ROUTE	KILOMETER POST TOTAL PROJECT	SHEET NO	TOTAL SHEETS
04	Ala	80	1.6/2.7	593 R1	643

REGISTERED ELECTRICAL ENGINEER 05/15/06 DATE

1-29-07
PLANS APPROVAL DATE

REGISTERED PROFESSIONAL ENGINEER JENS ERLINGSSON No. 8249 Exp. 9/30/08 ELECTRICAL STATE OF CALIFORNIA

PB POWER, Inc.
A Parsons Brinckerhoff Company
303 Second St., Suite 700N
San Francisco, CA 94107-1317

The State of California or its officers or agents shall not be responsible for the accuracy or completeness of electronic copies of this plan sheet.

To get to the Caltrans web site, go to http://www.dot.ca.gov

Caltrans Metric

CONDUIT DATA

MOLE SUBSTATION

Conduit No	Reference	Size	Type	Total Fill (mm²)	Allowable Fill (mm²)	Cable Area (mm²)	Included Cable No.	Conductor Type
T25	E-124, E-151	610	152 mm siderail ladder	4054.65 △1	16774.16	62.07	1702-5	1-3/C #16, 600 V, EPR insulation
						188.55	1702-3	1-12/C #16, 600 V, EPR insulation
						142.33	1702-2	1-5/C #12, 600 V, EPR insulation
						188.55	1703-3	1-12/C #16, 600 V, EPR insulation
						142.33	1703-2	1-5/C #12, 600 V, EPR insulation
					△1	~~188.55~~	~~1701-3~~	~~1-12/C #16, 600 V, EPR insulation~~
						527.18	1631	1-3/C+gnd #2, 600 V, EPR insulation
						527.18	1632	1-3/C+gnd #2, 600 V, EPR insulation
						~~188.55~~	~~1704-3~~	~~1-12/C #16, 600 V, EPR insulation~~
						142.33	1704-2	1-5/C #12, 600 V, EPR insulation
						102.61	UP004-9	1-2/C+gnd #12, 600 V, EPR insulation
						102.61	UP004-11	1-2/C+gnd #12, 600 V, EPR insulation
						277.47	UP004-3	1-2/C+gnd #6, 600 V, EPR insulation
						62.07	1651-4	1-3/C #16, 600 V, EPR insulation
						126.88	UP004-1	1-2/C+gnd #10, 600 V, EPR insulation
						126.88	UP004-4/6	1-2/C+gnd #10, 600 V, EPR insulation
						126.88	UP004-10	1-2/C+gnd #10, 600 V, EPR insulation
						126.88	UP004-12	1-2/C+gnd #10, 600 V, EPR insulation
						142.33	1701-2	1-5/C #12, 600 V, EPR insulation
						316.24	1705-3	1-12/C #12, 600 V, EPR insulation
						142.33	1705-2	1-5/C #12, 600 V, EPR insulation
					△1	102.61	UP004-8	1-2/C + gnd #12, 600 V, EPR insulation
T26	E-124	610	152 mm siderail ladder	388.65	16670.52	62.07	1621-2	1-3/C #16, 600 V, EPR insulation
						147.76	1621	1-3/C+gnd #10, 600 V, EPR insulation
						62.07	1707-2	1-3/C #16, 600 V, EPR insulation
						116.75	1707-1	1-5/C #14, 600 V, EPR insulation
					86.37 total dia.	.00	1707	3+1gnd, 350 kcmil, #1/0, 600 V, RHH/RHW Insulation

NOTES:

1. Circuits 1707, 1711-A, 1711-B, 2711-A and 2711-B routed inside cable trays shall be arranged in one level. No other cables shall be placed on them.

REGISTERED PROFESSIONAL ENGINEER FADI WALIEDDINE No. 11465 Exp. 12/31/2009 ELECTRICAL STATE OF CALIFORNIA △1

MARK	DATE	DESCRIPTIONS	REV	CK	CCO NO.
△1	1/31/09	Added cable to conduit T25. Changed cable size to conduit T25.	RSB	EJL	Geotech Arrays

REVISIONS

CONTRACT CHANGE ORDER NO. 128
SHEET 21 OF 25

DETAILS
CONDUIT AND TRAY SCHEDULE

E-240

DATE	REVISED BY	DATE REVISED
2/06	FK	2/06

CALCULATED/DESIGNED BY AB
CHECKED BY

DESIGN OVERSIGHT
BEHZAD GOLEMOHAMMADI

STATE OF CALIFORNIA - DEPARTMENT OF TRANSPORTATION
Caltrans

LAST REVISION 00-00-00
DATE PLOTTED => 8/4/2009
TIME PLOTTED => 3:17:49 PM

FOR REDUCED PLANS ORIGINAL SCALE IS IN MILLIMETERS 0 20 40 60 80

DGN FILE =>T:\13103\MS\pse\OTD-Contract 1\CCO\Electrical\CCO-Re locate Geotech arrays\40120lue240r1.dgn
USERNAME =>ricafrente

CU 04251 EA 0120L1

DIST	COUNTY	ROUTE	KILOMETER POST TOTAL PROJECT	SHEET NO	TOTAL SHEETS
04	Ala	80	1.6/2.7	594 R2	643

REGISTERED ELECTRICAL ENGINEER 05/15/06 DATE

1-29-07
PLANS APPROVAL DATE

REGISTERED PROFESSIONAL ENGINEER JENS ERLINGSSON No. 8249 Exp. 9/30/08 ELECTRICAL STATE OF CALIFORNIA

PB POWER, Inc.
A Parsons Brinckerhoff Company
303 Second St., Suite 700N
San Francisco, CA 94107-1317

The State of California or its officers or agents shall not be responsible for the accuracy or completeness of electronic copies of this plan sheet.

To get to the Caltrans web site, go to http://www.dot.ca.gov

Caltrans Metric

CONDUIT DATA

STRONG MOTION DETECTION SYSTEM

Conduit No	Reference	Size	Type	Total Fill (mm²)	Allowable Fill (mm²)	Cable Area (mm²)	Included Cable No.	Conductor Type
9001	E-174, E-177	27	RGS conduit	0.00	229.03	0.00	Pull Rope 1	Soft-Fiber Polyester
9002	E-174, E-177	41	RGS conduit	0.00	534.55	0.00	Pull Rope 1	Soft-Fiber Polyester
9004	E-174	27	RGS conduit	0.00	229.03	0.00	Pull Rope 1	Soft-Fiber Polyester
9006	E-174	27	RGS conduit	0.00	229.03	0.00	Pull Rope 1	Soft-Fiber Polyester
9008	E-175, E-177	27	RGS conduit	0.00	229.03	0.00	Pull Rope 1	Soft-Fiber Polyester
9011	E-175, E-177	27	RGS conduit	0.00	229.03	0.00	Pull Rope 1	Soft-Fiber Polyester
9012	E-176, E-177	27	RGS conduit	0.00	229.03	0.00	Pull Rope 1	Soft-Fiber Polyester
9013	E-176, E-177	27	RGS conduit	0.00	229.03	0.00	Pull Rope 1	Soft-Fiber Polyester
9020	E-102, E-173A, E-179	21	Liquidtight flex metal conduit	142.26	225.16	0.00	Pull Rope 1	Soft-Fiber Polyester
						47.42	2507-11A	4 pair #22, shielded pairs, FEP insulation (SSC)
						47.42	2507-11B	4 pair #22, shielded pairs, FEP insulation (SSC)
						47.42	2507-11C	4 pair #22, shielded pairs, FEP insulation (SSC)
9021	E-173A, E-179	41	RGS conduit	142.26	534.55	0.00	Pull Rope 1	Soft-Fiber Polyester
						47.42	2507-12A	4 pair #22, shielded pairs, FEP insulation (SSC)
						47.42	2507-12B	4 pair #22, shielded pairs, FEP insulation (SSC)
						47.42	2507-12C	4 pair #22, shielded pairs, FEP insulation (SSC)
9022	E-173A, E-179	41	RGS conduit	142.26	534.55	0.00	Pull Rope 1	Soft-Fiber Polyester
						47.42	2507-13A	4 pair #22, shielded pairs, FEP insulation (SSC)
						47.42	2507-13B	4 pair #22, shielded pairs, FEP insulation (SSC)
						47.42	2507-13C	4 pair #22, shielded pairs, FEP insulation (SSC)
9023	E-173A, E-179	41	RGS conduit	142.26	534.55	0.00	Pull Rope 1	Soft-Fiber Polyester
						47.42	2507-14A	4 pair #22, shielded pairs, FEP insulation (SSC)
						47.42	2507-14B	4 pair #22, shielded pairs, FEP insulation (SSC)
						47.42	2507-14C	4 pair #22, shielded pairs, FEP insulation (SSC)
9024	E-173A, E-179 2	41	RGS conduit	142.26	534.55	0.00	Pull Rope 1	Soft-Fiber Polyester
						47.42	2507-15A	4 pair #22, shielded pairs, FEP insulation (SSC)
						47.42	2507-15B	4 pair #22, shielded pairs, FEP insulation (SSC)
						47.42	2507-15C	4 pair #22, shielded pairs, FEP insulation (SSC)
9025	E-174, E-175, E-60, E-61	103	RGS conduit	0.00	3324.51	0.00	Pull Rope 1	Soft-Fiber Polyester
9025A	E-61	103	RGS conduit	0.00	3324.51	0.00	Pull Rope 1	Soft-Fiber Polyester 1
9025B	E-61	103	RGS conduit	0.00	3324.51	0.00	Pull Rope 1	Soft-Fiber Polyester
9026	E-175, E-176, E-61, E-62	103	RGS conduit	0.00	3324.51	0.00	Pull Rope 1	Soft-Fiber Polyester
9027	E-176, E-62	103	RGS conduit	0.00	3324.51	0.00	Pull Rope 1	Soft-Fiber Polyester
9030	E-178	103	RGS conduit	0.00	3324.51	0.00	Pull Rope 1	Soft-Fiber Polyester
~~9031~~	~~E-178~~	~~53~~	~~RGS conduit~~	~~0.00~~	~~879.42~~	~~0.00~~	~~Pull Rope 1~~	~~Soft-Fiber Polyester~~
~~9032~~	~~E-178~~	~~53~~	~~RGS conduit~~	~~0.00~~	~~879.42~~	~~0.00~~	~~Pull Rope 1~~	~~Soft-Fiber Polyester~~
9035	E-178 2	53	RGS conduit	0.00	879.42	0.00	Pull Rope 1	Soft-Fiber Polyester
9036	E-178 2	78	RGS conduit	0.00	1935.24	0.00	Pull Rope 1	Soft-Fiber Polyester
~~9037~~	~~E-178~~	~~53~~	~~RGS conduit~~	~~0.00~~	~~879.42~~	~~0.00~~	~~Pull Rope 1~~	~~Soft-Fiber Polyester~~
9041	E-178, E-116 E-102	78	RGS conduit	0.00	1935.24	0.00	Pull Rope 1	Soft-Fiber Polyester
9042	E-178, E-116 E-102	78	RGS conduit	0.00	1935.24	0.00	Pull Rope 1	Soft-Fiber Polyester
9043	E-178, E-115	78	RGS conduit	0.00	1935.24	0.00	Pull Rope 1	Soft-Fiber Polyester
9044	E-178, E-115	78	RGS conduit	0.00	1935.24	0.00	Pull Rope 1	Soft-Fiber Polyester

CONDUIT DATA

STRONG MOTION DETECTION SYSTEM

Conduit No	Reference	Size	Type	Total Fill (mm²)	Allowable Fill (mm²)	Cable Area (mm²)	Included Cable No.	Conductor Type
9045	E-173A, E-179 2	41	RGS conduit	426.78 2	534.55	0.00	Pull Rope 1	Soft-Fiber Polyester
						47.42	2507-11A	4 pair #22, shielded pairs, FEP insulation (SSC)
						47.42	2507-11B	4 pair #22, shielded pairs, FEP insulation (SSC)
						47.42	2507-11C	4 pair #22, shielded pairs, FEP insulation (SSC)
						47.42	2507-12A	4 pair #22, shielded pairs, FEP insulation (SSC)
					2	47.42	2507-12B	4 pair #22, shielded pairs, FEP insulation (SSC)
						47.42	2507-12C	4 pair #22, shielded pairs, FEP insulation (SSC)
						47.42	2507-13A	4 pair #22, shielded pairs, FEP insulation (SSC)
						47.42	2507-13B	4 pair #22, shielded pairs, FEP insulation (SSC)
						47.42	2507-13C	4 pair #22, shielded pairs, FEP insulation (SSC)
9046	E-173A, E-179 2	41	RGS conduit	284.52 2	534.55	0.00	Pull Rope 1	Soft-Fiber Polyester
						47.42	2507-14A	4 pair #22, shielded pairs, FEP insulation (SSC)
						47.42	2507-14B	4 pair #22, shielded pairs, FEP insulation (SSC)
						47.42	2507-14C	4 pair #22, shielded pairs, FEP insulation (SSC)
						47.42	2507-15A	4 pair #22, shielded pairs, FEP insulation (SSC)
					2	47.42	2507-15B	4 pair #22, shielded pairs, FEP insulation (SSC)
						47.42	2507-15C	4 pair #22, shielded pairs, FEP insulation (SSC)
9047	E-173A, E-179	41	RGS conduit	0.00	534.55	0.00	Pull Rope 1	Soft-Fiber Polyester
9050	E-112, E-173A, E-102	103	RGS conduit	121.74	4404.97	0.00	Pull Rope 1	Soft-Fiber Polyester
						121.74	2507-3	4 pair #22, shielded pairs, 300 V, PE insulation (ISDN cable)
9051	E-111, E-173A, E-102	103	RGS conduit	164.68	2576.49	0.00	Pull Rope 1	Soft-Fiber Polyester
						62.07	2507-16	1-3/C #16, 600 V, EPR insulation
						102.61	UP004-B	1-2/C + gnd #12, 600v, EPR insulation
9052	E-173A, E-102, E-112	41	RGS conduit	0.00	534.55	0.00	Pull Rope 1	Soft-Fiber Polyester

REGISTERED PROFESSIONAL ENGINEER FADI WALIEDDINE No. 11465 Exp. 12/31/2009 ELECTRICAL STATE OF CALIFORNIA

MARK	DATE	DESCRIPTIONS	REV	CK	CCO NO.
2	7/31/09	Added cables to conduits 9020, 9021 9022, 9023, 9024, 9045, 9046, 9050 and 9051. Deleted conduits 9031, 9032 and 9037. Added conduits 9047 and 9052. Change conduit size 9036.	RSB	EJL	Geotech Arrays
1	5/29/09	Added conduits 9025A and 9025B			101

REVISIONS

CONTRACT CHANGE ORDER NO. 128
SHEET 22 OF 25

DETAILS
CONDUIT AND TRAY SCHEDULE

E-241

REVISED BY	DATE REVISED
FK	2/06

CALCULATED/DESIGNED BY	CHECKED BY
AB	2/06

DESIGN OVERSIGHT
BEHZAD GOLEMOHAMMADI

STATE OF CALIFORNIA - DEPARTMENT OF TRANSPORTATION
Caltrans

LAST REVISION 00-00-00
DATE PLOTTED => 8/4/2009
TIME PLOTTED => 3:18:11 PM

FOR REDUCED PLANS ORIGINAL SCALE IS IN MILLIMETERS 0 20 40 60 80

DGN FILE =>T:\13103\MS\pse\070-Contract 1\CCO\Electrical\CCO-Relocate Geotech arrays\401201ud241r2.dgn
USERNAME =>ricafrente
CU 04251
EA 0120L1

DIST	COUNTY	ROUTE	KILOMETER POST TOTAL PROJECT	SHEET NO	TOTAL SHEETS
04	Ala	80	1.6/2.7	595 R2	643

REGISTERED ELECTRICAL ENGINEER 05/15/06 DATE

1-29-07
PLANS APPROVAL DATE

REGISTERED PROFESSIONAL ENGINEER JENS ERLINGSSON No. 8249 Exp. 9/30/08 ELECTRICAL STATE OF CALIFORNIA

PB POWER, Inc.
A Parsons Brinckerhoff Company
303 Second St., Suite 700N
San Francisco, CA 94107-1317

The State of California or its officers or agents shall not be responsible for the accuracy or completeness of electronic copies of this plan sheet.

To get to the Caltrans web site, go to http://www.dot.ca.gov

Caltrans Metric

CONDUIT DATA

MOLE SUBSTATION ARCHITECTURAL

Conduit No.	Reference	Size	Type	Total Fill (mm²)	Allowable Fill (mm²)	Cable Area (mm²)	Included Cable No.	Conductor Type
0201	AE-5, E-101, E-102, E-111	103	RGS conduit	0.00	3324.51	0.00	Pull Rope 1	Soft-Fiber Polyester
0202	AE-5, E-101, E-102, E-111	103	RGS conduit	2628.48	3324.51	2628.48	1003-1	3-1/C #4/0, 15 kV, EPR Insulation
						0.00	Pull Rope 1	Soft-Fiber Polyester
0203	AE-5, E-101, E-102, E-111	103	RGS conduit	0.00	3324.51	0.00	Pull Rope 1	Soft-Fiber Polyester
0204	AE-5, E-101, E-102, E-111	103	RGS conduit	0.00	3324.51	0.00	Pull Rope 1	Soft-Fiber Polyester
0205	AE-5, E-101, E-102, E-111	103	RGS conduit	0.00	3324.51	0.00	Pull Rope 1	Soft-Fiber Polyester
0206	AE-5, E-101, E-102, E-111	103	RGS conduit	0.00	3324.51	0.00	Pull Rope 1	Soft-Fiber Polyester
0216			Not used					
0300	AE-5, E-101, E-102, E-112	103	RGS conduit	0.00	3324.51	0.00	Pull Rope 1	Soft-Fiber Polyester
0301	AE-5, E-101, E-102, E-112	103	RGS conduit	2403.42	2576.49	0.00	Pull Rope 1	Soft-Fiber Polyester
						1201.71	1474-26	50 pair #18, shielded pairs, IS/OS shield 600 V, XLPE insul., PVC jacket
						1201.71	2474-27	50 pair #18, shielded pairs, IS/OS shield 600 V, XLPE insul., PVC jacket
0302	AE-5, E-101, E-102, E-112	103	RGS conduit	121.74	4404.97 △2	0.00	Pull Rope 1	Soft-Fiber Polyester
						121.74	2507-3	4 pair #22, shielded pairs, 300 V, PE insulation (ISDN cable)
0303	AE-5, E-101, E-102, E-112	103	RGS conduit	2403.42	2576.49	1201.71	1473-26	50 pair #18, shielded pairs, IS/OS shield 600 V, XLPE insul., PVC jacket
						1201.71	2473-27	50 pair #18, shielded pairs, IS/OS shield 600 V, XLPE insul., PVC jacket
						0.00	Pull Rope 1	Soft-Fiber Polyester
0304	AE-5, E-101, E-102, E-112	103	RGS conduit	196.20	2576.49	0.00	Pull Rope 1	Soft-Fiber Polyester
						98.10	1803	1 - 2 pair, shielded #18 with IS/OA, 600 V, PVC
						98.10	1804	1 - 2 pair, shielded #18 with IS/OA, 600 V, PVC
0305	AE-5, E-101, E-102, E-112	103	RGS conduit	0.00	3324.51	0.00	Pull Rope 1	Soft-Fiber Polyester
0306	AE-5, E-101, E-102, E-112	103	RGS conduit	0.00	3324.51	0.00	Pull Rope 1	Soft-Fiber Polyester
0307	AE-5, E-101, E-102, E-112	103	RGS conduit	0.00	3324.51	0.00	Pull Rope 1	Soft-Fiber Polyester
0400	AE-5, E-101, E-102, E-111	103	RGS conduit	732.20	2576.49	366.10	1627	1-3/C+gnd #4, 600 V, EPR insulation
						0.00	Pull Rope 1	Soft-Fiber Polyester
						366.10	1626	1-3/C+gnd #4, 600 V, EPR insulation
0401	AE-5, E-101, E-102, E-111	103	RGS conduit	849.65 △1	3324.51 △1	0.00	Pull Rope 1	Soft-Fiber Polyester
						262.68	A-1006	1-3/C + gnd #8, 600 V, EPR insulation
						262.68	A-1007	1-3/C + gnd #8, 600 V, EPR insulation
						324.29	A-1008	1-3/C + gnd #6, 600 V, EPR insulation
0402	AE-5, E-101, E-102, E-111	103	RGS conduit	164.68	2576.49 △2	0.00	Pull Rope 1	Soft-Fiber Polyester
						62.07	2507-16	1-3/C #16, 600 V, EPR insulation
						102.61	UP004-8	1-2/C + gnd #12, 600v, EPR insulation
0403	AE-5, E-101, E-102, E-111	103	RGS conduit	0.00	3324.51	0.00	Pull Rope 1	Soft-Fiber Polyester
0404	AE-5, E-101, E-102, E-111	103	RGS conduit	0.00	3324.51	0.00	Pull Rope 1	Soft-Fiber Polyester
0405	AE-5, E-101, E-102, E-111	103	RGS conduit	0.00	3324.51	0.00	Pull Rope 1	Soft-Fiber Polyester
0406	AE-5, E-101, E-102, E-111	103	RGS conduit	0.00	3324.51	0.00	Pull Rope 1	Soft-Fiber Polyester
0407	AE-5, E-101, E-102, E-111	103	RGS conduit	0.00	3324.51	0.00	Pull Rope 1	Soft-Fiber Polyester
0408	AE-5, E-101, E-102, E-111	103	RGS conduit	0.00	3324.51	0.00	Pull Rope 1	Soft-Fiber Polyester

CONDUIT DATA

MOLE SUBSTATION ARCHITECTURAL

Conduit No.	Reference	Size	Type	Total Fill (mm²)	Allowable Fill (mm²)	Cable Area (mm²)	Included Cable No.	Conductor Type
0409	AE-5, E-101, E-102, E-111	103	RGS conduit	972.87	3324.51	324.29	S-1601	1-3/C+gnd #6, 600 V, EPR insulation
						324.29	S-1602	1-3/C+gnd #6, 600 V, EPR insulation
						324.29	A-1005	1-3/C+gnd #6, 600 V, EPR insulation
						0.00	Pull Rope 1	Soft-Fiber Polyester
0410	AE-5, E-101, E-102, E-111	103	RGS conduit	0.00	3324.51	0.00	Pull Rope 1	Soft-Fiber Polyester
0411	AE-5, E-101, E-102, E-111	103	RGS conduit	0.00	3324.51	0.00	Pull Rope 1	Soft-Fiber Polyester
0383	AE-5, E-101	53	RGS conduit	0.00	879.42	0.00	Pull Rope 1	Soft-Fiber Polyester
0384	AE-5, E-101	53	RGS conduit	0.00	879.42	0.00	Pull Rope 1	Soft-Fiber Polyester
0385	E-80	41	RGS conduit	0.00	534.55	0.00	Pull Rope 1	Soft-Fiber Polyester
0386	E-80	41	RGS conduit	0.00	534.55	0.00	Pull Rope 1	Soft-Fiber Polyester
0480	AE-5, E-101	103	RGS conduit	0.00	3324.51	0.00	Pull Rope 1	Soft-Fiber Polyester
0481	AE-5, E-101	53	RGS conduit	0.00	879.42	0.00	Pull Rope 1	Soft-Fiber Polyester

△2

REGISTERED PROFESSIONAL ENGINEER FADI WALIEDDINE No. 11465 Exp. 12/31/2009 ELECTRICAL STATE OF CALIFORNIA

△1 △2

MARK	DATE	DESCRIPTIONS	REV	CK	CCO NO.
△2	7/31/09	Added conduits 0383, 0384, 0385, 0386, 0480 and 0481. Added cables to conduits 0302 and 0402	RSB	EJL	Geotech Arrays
△1	8/29/08	Added cable/ckts A-1006, A-1007, A-1008	JH	EJL	Light Pipe

REVISIONS

CONTRACT CHANGE ORDER NO. 128
SHEET 23 OF 25

DETAILS
CONDUIT AND TRAY SCHEDULE

E-242

DATE	FK	REVISED BY	DATE REVISED
2/06	AB		2/06

CALCULATED/DESIGNED BY FK
CHECKED BY AB

DESIGN OVERSIGHT
BEHZAD GOLEMOHAMMADI

STATE OF CALIFORNIA - DEPARTMENT OF TRANSPORTATION
Caltrans

LAST REVISION 00-00-00

DATE PLOTTED => 8/4/2009
TIME PLOTTED => 3:18:31 PM

FOR REDUCED PLANS ORIGINAL SCALE IS IN MILLIMETERS 0 20 40 60 80

DGN FILE =>T:\13103\MS\pse\DTD-Contract 1\CCO\Electrical\CCO-Relocate Geotech arrays\401201ud242r2.dgn
USERNAME =>ricafrente
CU 04251
EA 0120L1

DIST	COUNTY	ROUTE	KILOMETER POST TOTAL PROJECT	SHEET NO	TOTAL SHEETS
04	Ala	80	1.6/2.7	638 R1	643

Caltrans Metric

05/15/06
REGISTERED STRUCTURAL ENGINEER

1-29-07
PLANS APPROVAL DATE

REGISTERED PROFESSIONAL ENGINEER JENS ERLINGSSON No. 8249 Exp. 9/30/08 ELECTRICAL STATE OF CALIFORNIA

PB POWER, Inc.
A Parsons Brinckerhoff Company
303 Second St., Suite 700N
San Francisco, CA 94107-1317

The State of California or its officers or agents shall not be responsible for the accuracy or completeness of electronic copies of this plan sheet.

To get to the Caltrans web site, go to: http://www.dot.ca.gov

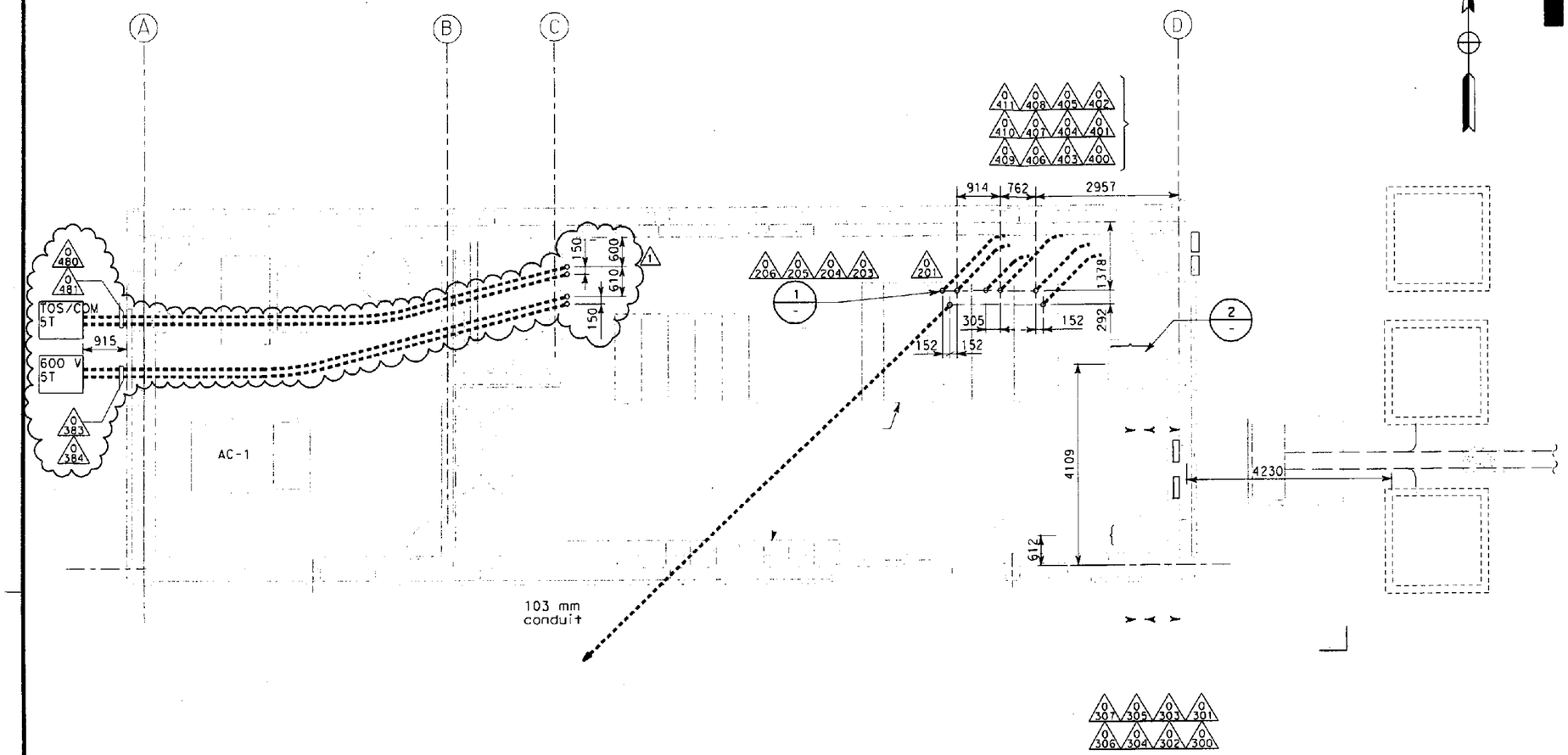

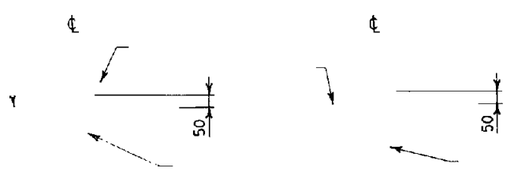

NOTES:

1. Conduit stub-up dimensions at the 12.47 kV switchgear are approximate. Contractor shall verify, prior to installation and without additional cost to the State, that the stub-ups are in appropriate locati

CALIFORNIA STATE FIRE MARSHAL
APPROVED

Approval of this plan does not authorize or approve any omission or deviation from applicable regulations. Final approval is subject to field inspection. One set of approved plans shall be available on the project site at all times.

Reviewed by: 7-25-06

ALL DIMENSIONS ARE IN MILLIMETERS UNLESS OTHERWISE SHOWN

REGISTERED PROFESSIONAL ENGINEER FADI WALIEDDINE No. 11465 Exp. 12/31/2009 ELECTRICAL STATE OF CALIFORNIA

MARK	DATE	DESCRIPTIONS	REV	CK	CCO NO.
1	7/31/09	Added conduits 0383, 0384 0480 and 0481.	RSB	EJL	Geotech Arrays

REVISIONS

CONTRACT CHANGE ORDER NO. 128
SHEET 24 OF 25

Behzad Golemohammadi
DESIGN OVERSIGHT
SIGN OFF DATE

	BY	CHECKED
DESIGN	A. Borgia	F. Kwok
DETAILS	L. Reyes	A. Borgia
QUANTITIES	P. McNamee	A. Borgia

PREPARED FOR THE STATE OF CALIFORNIA DEPARTMENT OF TRANSPORTATION

Jens Erlingsson
PROJECT ENGINEER

BRIDGE NO. 34-0006
KILOMETER POST

AE-5

CU 04251
EA 0120L1

DISREGARD PRINTS BEARING EARLIER REVISION DATES

REVISION DATES (PREL)(WORK STAGE ONLY)

SHEET OF

DESIGN DETAIL SHEET (METRIC) (REV. 3/1/98)

ORIGINAL SCALE IN MILLIMETERS FOR REDUCED PLANS 0 10 20 30 40 50 60 70 80 90 100

FILE => T:\13103\MS\pse\OTD-Contract 1\CCO\Electrical\CCO-Relocate Geotech arrays\4C1201af005r1.dgn

USERNAME => rlcoffrentDATE PLOTTED => 8/4/2009 TIME PLOTTED => 3:08:00 PM

DIST	COUNTY	ROUTE	KILOMETER POST TOTAL PROJECT	SHEET No	TOTAL SHEETS
04	Ala	80	1.6/2.7	640 R2	643

REGISTERED ELECTRICAL ENGINEER 05/15/06

1-29-07
PLANS APPROVAL DATE

REGISTERED PROFESSIONAL ENGINEER JENS ERLINGSSON No. 8249 Exp. 9/30/08 ELECTRICAL STATE OF CALIFORNIA

PB POWER, Inc.
A Parsons Brinckerhoff Company
303 Second St., Suite 700N
San Francisco, CA 94107-1317

The State of California or its officers or agents shall not be responsible for the accuracy or completeness of electronic copies of this plan sheet.

To get to the Caltrans web site, go to: http://www.dot.ca.gov

Caltrans Metric

LIGHTING PANEL LP-A (CKT #1631) Location: Mole Substation

	LOAD DESCRIPTION	LTG	REC	OTH.	BKR		BKR	LTG	REC	OTH.	LOAD DESCRIPTION
	Spare				20/1	1 A 2	20/1				Spare
1	Battery Room Hydrogen Ventilation EF-2 Circuit No. 1654		1	22	20/1	3 B 4	20/1		180		Recept-(1) Elect. Equip. and Air Compressor Room
	Lighting-Battery Room	78			20/1	5 C 6	20/1			1000	Substation Smoke Detectors (4) and Local Alarm Panel
	Lighting-Air Compressor Room	583			20/1	7 A 8	20/1		540		Recept.(3) Elect. Equip. and Air Compressor Room
	Lighting-Electrical Room	700			20/1	9 B 10	20/1				Spare
	Lighting-Electrical Room	700			20/1	11 C 12	20/1		900		Recept-(5) Electrical Equip. Room and Air Compressor Room
	Spare				20/1	13 A 14	20/1		900		Recept-(5) Electrical Equip. Room and Air Compressor Room
	Spare				20/1	15 B 16	20/1		1	53	Battery Room Cooling Ventilation Fan EF-1 Circuit 1650.
1	Outdoor Lighting and Control	1150			20/1	17 C 18	20/1		200		Security Control Panel
	Battery Room Unit Heater EH-1 Circuit No. 1633.		1	1666	20/2	19 A 20	20/1				Spare
				1666		21 B 22	20/1	187			Emergency Lighting
	Spare				20/1	23 C 24	20/1				Spare
	Spare				20/1	25 A 26	20/1				Spare
	Spare				20/2	27 B 28	20/1			200	Irrigation Controller Cabinet
						29 C 30	20/2				Spare
	TOTAL VA	3211		3354				187	2720	1253	TOTAL VA

1

LOAD SUMARY IN VA

LIGHTING: (at 100%) : 3.398 kVA
GEN USE: (1st 10 kVA at 100% + 50% OF REMAINDER) : 7.327

1

TOTAL kVA: 10.725
TOTAL A: 29.80 A at 208 V, 3Ø

BALANCE (kVA)

PHASE A 3.689
PHASE B 3.008
PHASE C 4.028

1

VOLTAGE: 208/120 V
PHASE/WIRES: 3-phase, 4-wire
BUS RATING: 100 A
MAINS: 100 A
MOUNTING: SURFACE
k.A.I.C. = 10

1

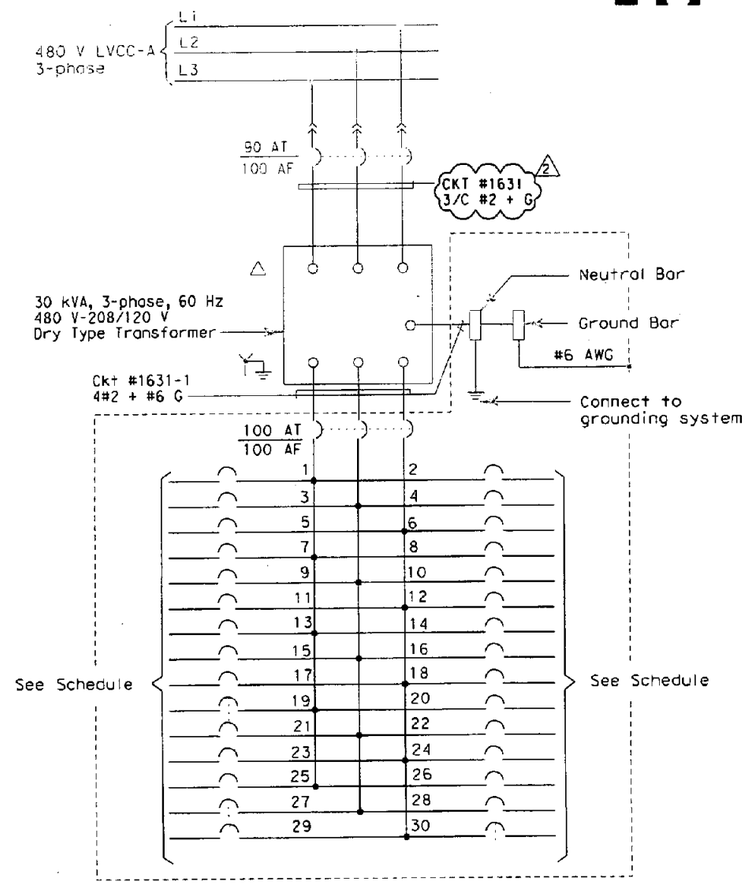

LIGHTING PANEL - LP-A

SHEET NOTE:

1. Circuits controlled by lighting contactor; revised loads based on actual data; describe heater with internal thermostat.

NOTES:

1. Contractor to provide nameplates and circuit schedule as shown.
2. Reference:
   - For LVCC-A single line diagram, see sheet E-130.
   - For circuit and conduit/cable tray schedules, see sheets starting at E-224.
   - For outdoor lighting control diagram, see sheet AE-9.

CALIFORNIA STATE FIRE MARSHAL
APPROVED

Approval of this plan does not authorize or approve any omission or deviation from applicable regulations. Final approval is subject to field inspection. One set of approved plans shall be available on the project site at all times.

Reviewed by: 7-25-06

2 1

REGISTERED PROFESSIONAL ENGINEER FADI WALIEDDINE No. 11465 Exp. 12/31/2009 ELECTRICAL STATE OF CALIFORNIA

MARK	DATE	DESCRIPTIONS	REV	CK	CCO NO.
2	7/31/09	Changed cable size.	DO	EJL	Geotech Arrays
1	2/27/09	Added EF-2. Revised load.	DO	EJL	Battery Room

REVISIONS

CONTRACT CHANGE ORDER NO. 128
SHEET 25 OF 25

ALL DIMENSIONS ARE IN MILLIMETERS UNLESS OTHERWISE SHOWN

Behzad Golemohammadi
DESIGN OVERSIGHT
SIGN OFF DATE

	BY	CHECKED
DESIGN	A. Borgia	F. Kwok
DETAILS	L. Reyes	A. Borgia
QUANTITIES	P. McNamee	A. Borgia

PREPARED FOR THE STATE OF CALIFORNIA DEPARTMENT OF TRANSPORTATION

Jens Erlingsson
PROJECT ENGINEER

BRIDGE NO. 34-0006
KILOMETER POST

MOLE SUBSTATION ARCHITECTURAL
PANEL SCHEDULE

AE-7

SHEET OF

DESIGN DETAIL SHEET (METRIC) (REV. 3/1/98)

ORIGINAL SCALE IN MILLIMETERS FOR REDUCED PLANS 0 10 20 30 40 50 60 70 80 90 100

CU 04251
EA 0120L1

DISREGARD PRINTS BEARING EARLIER REVISION DATES

REVISION DATES (PRELIMINARY STAGE ONLY)

FILE => T:\13103\MS\pse\OTD-Contract 1\CCO\Electrical\CCO-Relocate Geotech arrays\401201af007r2.dgn

USERNAME => rlcoffen@ATE PLOTTED => 8/4/2009 TIME PLOTTED => 4:51:32 PM

STATE OF CALIFORNIA - DEPARTMENT OF TRANSPORTATION

CONTRACT CHANGE ORDER MEMORANDUM

DATE: 10/5/2009 Page 1 of 1

TO: AMER BATA / BEN GHAFGHAZI

FROM: BEN GHAFGHAZI

FILE: E.A. 04 - 0120L4
CO-RTE-PM ALA-80-1.6/2.7
FED. NO. NO FED AID

CCO#: 128 SUPPLEMENT#: 0 Category Code: CBSA

CONTINGENCY BALANCE (incl. this change) $3,067,792.40

COST: $106,917.00 INCREASE ☑ DECREASE ☐

HEADQUARTERS APPROVAL REQUIRED? ☑ YES ☐ NO

SUPPLEMENTAL FUNDS PROVIDED: $0.00

IS THIS REQUEST IN ACCORDANCE WITH ENVIRONMENTAL DOCUMENTS? ☑ YES ☐ NO

CCO DESCRIPTION:
Geotech downhole arrays.

PROJECT DESCRIPTION:
Construct bridge, roadway, building and electrical system.

Original Contract Time:	Time Adj. This Change:	Previously Approved CCO Time Adjustments:	Percentage Time Adjusted: (including this change)	Total # of Unreconciled Deferred Time CCO(s): (including this change)
810 Day(s)	DEF Day(s)	184 Day(s)	23 %	13

THIS CHANGE ORDER PROVIDES FOR:

Revising the location of strong motion dectection system by installing free field, downhole arrays and recording systems at a new location, as well as the annodize coating for the cabinet, per sheets 2 of 25 through 25 of 25 of this CCO.

This change is necessary because the location of the strong motion detection system as shown in the contract plans conflicts with the work of the Oakland Touchdown Phase 2 (OTD2) project. By avoiding the conflict with OTD2, the strong motion detection system can become operational before the start of OTD2 project.

This work will be paid as an Adjustment of Compensation at Agreed Lump Sum of $106,917.00, which can be financed from the contingency fund. This sum constitutes full compensation, including markups, for this change. A detailed cost analysis is on file in the Resident Engineer's office.

This change was requested by Jaime Gutierrez of Project Development (memo attached), and has been discussed and concurred with Pat Hipley of Earthquake Engineering, Parviz Boozarpour of Electrical Design, Amer Bata, Construction Manager, Mike Forner, SFOBB Principal Construction Engineer, and Patrick Treacy, HQ Construction Coordinator. An Issue and Approve was granted by Headquarters on February 25, 2010.

Adjustment of contract time is deferred pending completion of the work specified in this change as it may affect the controlling operation. Determination of a commensurate time extension will be made in accordance with Section 10-1.14, "Progress Schedule (Critical Path Method)," of the Special Provisions and Section 8-1.07, "Liquidated Damages," of the Standard Specifications.

CONCURRED BY:

Construction Engineer:	Ben Ghafghazi	Date 3/17/2010
Bridge Engineer:		Date
Project Engineer:	Jaime Gutierrez	Date 8/28/09
Project Manager:		Date
FHWA Rep.:		Date
Environmental:		Date
Other (specify):	Parviz Boozarpour, Elec. Design	Date 8/28/09
Other (specify):	Pat Hipley, Earthquake Eng.	Date 8/28/09
District Prior Approval By:		Date
HQ (Issue Approve) By:	Larry Salhaney	Date 2/25/10
Resident Engineer's Signature:		~~Date~~ 3/17/2010

ESTIMATE OF COST

	THIS REQUEST	TOTAL TO DATE
ITEMS	$0.00	$0.00
FORCE ACCOUNT	$0.00	$0.00
AGREED PRICE	$0.00	$0.00
ADJUSTMENT	$106,917.00	$106,917.00
TOTAL	$106,917.00	$106,917.00

FEDERAL PARTICIPATION

☐ PARTICIPATING ☐ PARTICIPATING IN PART ☑ NONE
☐ NON-PARTICIPATING (MAINTENANCE) ☐ NON-PARTICIPATING

FEDERAL SEGREGATION (if more than one Funding Source or P.I.P. type)
☑ CCO FUNDED PER CONTRACT ☐ CCO FUNDED AS FOLLOWS

FEDERAL FUNDING SOURCE	PERCENT

ADA Notice: For individuals with sensory disabilities, this document is available in alternate formats. For information call: (916) 654-6410 or TDD (916) 654-3880 or write Records and Forms Management, 1120 N Street, MS-89, Sacramento, CA 95814.

STATE OF CALIFORNIA - DEPARTMENT OF TRANSPORTATION

CONTRACT CHANGE ORDER MEMORANDUM

TO: AMER BATA / BEN GHAFGHAZI	FILE: E.A. 04 - 0120L4
FROM: BEN GHAFGHAZI	CO-RTE-PM ALA-80-1.6/2.7
	FED. NO. NO FED AID
CCO#: 128 SUPPLEMENT#: 1 Category Code: CBPC	CONTINGENCY BALANCE (incl. this change) $2,166,116.40
COST: $28,569.00 INCREASE ☑ DECREASE ☐	HEADQUARTERS APPROVAL REQUIRED? ☑ YES ☐ NO
SUPPLEMENTAL FUNDS PROVIDED: $0.00	IS THIS REQUEST IN ACCORDANCE WITH ENVIRONMENTAL DOCUMENTS? ☑ YES ☐ NO
CCO DESCRIPTION: Relocate Strong Motion Detection System	**PROJECT DESCRIPTION:** Construct bridge, roadway, building and electrical system.

Original Contract Time:	Time Adj. This Change:	Previously Approved CCO Time Adjustments:	Percentage Time Adjusted: (including this change)	Total # of Unreconciled Deferred Time CCO(s): (including this change)
810 Day(s)	DEF Day(s)	184 Day(s)	23 %	16

THIS CHANGE ORDER PROVIDES FOR:

Compensating the contractor for relocating Strong Motion Detection System Downhole Array 12-1 as shown on sheets 2 of 3 and 3 of 3 of this CCO, and covering all downhole arrays with metal plates.

The contractor has encountered an obstruction while installing Strong Motion Detection System Downhole Array 12-1. Caltrans Project Development then requested that this downhole arrays be relocated, and also that all downhole arrays be covered with 1200 mm x 2400 mm and 38 mm thick metal trench plates. The metal trench plates are required to prevent sinking and movement of the downhole boxes (which house the downhole arrays) by distributing the weight evenly.

All work shall be performed in accordance with Sections 10-3.01, "Description," 10-3.03, "Cost Break Down," and Section 10-3.24, "Strong Motion Detection System," of the Special Provisions as modified in CCO 128 Supplement 0.

The payment for the Extra Work will be a Lump Sum of $21,712.00, which can be financed from the contingency fund. A detailed cost analysis has been submitted by the contractor, which has been verified as reasonable by the Engineer.

Jaime Gutierrez of Project Development requested this change order (memo attached). This change order has been discussed and concurred with Mike Forner, SFOBB Principal Construction Engineer, and Patrick Treacy, HQ Construction Coordinator. An Issue and Approve was granted by Headquarters on 04/05/10.

Adjustment of contract time is deferred pending completion of the work specified in this change as it may affect the controlling operation.

CONCURRED BY:			
Construction Engineer:	Ben Ghafghazi	Date 4/5/2010	
Bridge Engineer:		Date	
Project Engineer:		Date	
Project Manager:		Date	
FHWA Rep.:		Date	
Environmental:		Date	
Other (specify):		Date	
Other (specify):	Patrick Treacy, HQ Const. Coord.	Date	4/2/10
District Prior Approval By:		Date	
HQ (Issue Approve) By:	See Hoesmich. ~~Larry Salhaney~~, HQ Const.	Date	4/5/10
Resident Engineer's Signature:		Date 4/5/2010	

ESTIMATE OF COST

	THIS REQUEST	TOTAL TO DATE
ITEMS	$0.00	$0.00
FORCE ACCOUNT	$0.00	$0.00
AGREED PRICE	$28,569.00	$28,569.00
ADJUSTMENT	$0.00	$106,917.00
TOTAL	$28,569.00	$135,486.00

FEDERAL PARTICIPATION

☐ PARTICIPATING ☐ PARTICIPATING IN PART ☑ NONE
☐ NON-PARTICIPATING (MAINTENANCE) ☐ NON-PARTICIPATING

FEDERAL SEGREGATION (if more than one Funding Source or P.I.P. type)
☑ CCO FUNDED PER CONTRACT ☐ CCO FUNDED AS FOLLOWS

FEDERAL FUNDING SOURCE	PERCENT

ADA Notice: For individuals with sensory disabilities, this document is available in alternate formats. For information call: (916) 654-6410 or TDD (916) 654-3880 or write Records and Forms Management, 1120 N Street, MS-89, Sacramento, CA 95814.

CONTRACT CHANGE ORDER

Change Requested by: Engineer

CCO: 128	Suppl. No. 1	Contract No. 04 - 0120L4	Road ALA-80-1.6/2.7	FED. AID LOC.: NO FED AID

To: **M C M CONSTRUCTION INC**

You are directed to make the following changes from the plans and specifications or do the following described work not included in the plans and specifications for this contract. ***NOTE: This change order is not effective until approved by the Engineer.***

Description of work to be done, estimate of quantities and prices to be paid. (Segregate between additional work at contract price, agreed price and force account.) Unless otherwise stated, rates for rental of equipment cover only such time as equipment is actually used and no allowance will be made for idle time. This last percentage shown is the net accumulated increase or decrease from the original quantity in the Engineer's Estimate.

Extra Work at Lump Sum:

Provide labor, equipment and materials for changing the location of the Strong Motion Detection System Downhole Array 12-1, and installation of 1200 mm x 2400 mm and 38 mm thick metal trench plates to cover all downhole arrays, as shown on Sheet 2 of 3 and 3 of 3 of this CCO. These metal cover plates shall be anchored. All work shall be performed in accordance with Sections 10-3.01, "Description," 10-3.03, "Cost Break Down," and Section 10-3.24, "Strong Motion Detection System," of the Special Provisions as modified in CCO 128 Supplement 0.

Estimated cost of Extra Work at Lump Sum $28,569.00

Consideration of a time adjustment will be deferred until completion of the work specified herein. Determination of a commensurate time extension will be made in accordance with Section 8-1.07, "Liquidated Damages", of the Standard Specifications.

Estimated Cost: Increase ☑ **Decrease** ☐ **$28,569.00**

By reason of this order the time of completion will be adjusted as follows: Deferred

Signature	**Resident Engineer** BEN GHAFGHAZI	**Date** 4/2/2010
Signature	**Construction Engineer** Ben Ghafghazi	**Date** 4/2/2010
Signature	**Construction Manager** Amer Bata	**Date** 5/17/10

We the undersigned contractor, have given careful consideration to the change proposed and agree, if this proposal is approved, that we will provide all equipment, furnish the materials, except as may otherwise be noted above, and perform all services necessary for the work above specified, and will accept as full payment therefor the prices shown above.

NOTE: If you, the contractor, do not sign acceptance of this order, your attention is directed to the requirements of the specifications as to proceeding with the ordered work and filing a written protest within the time therein specified.

Signature	**(Print name and title)** EDMUNDO A. PUCHI, TREASURER	**Date** 5/5/10

DIST	COUNTY	ROUTE	KILOMETER POST TOTAL PROJECT	SHEET No	TOTAL SHEETS
04	Alo	80	1.6/2.7	544A R1	643

REGISTERED ELECTRICAL ENGINEER DATE

PLANS APPROVAL DATE

REGISTERED PROFESSIONAL ENGINEER FADI WALIEDDINE No. 11465 Exp. 12/31/09 ELECTRICAL STATE OF CALIFORNIA

PB POWER, Inc.
A Parsons Brinckerhoff Company
303 Second St., Suite 700N
San Francisco, CA 94107-1317

The State of California or its officers or agents shall not be responsible for the accuracy or completeness of electronic copies of this plan sheet.

To get to the Caltrans web site, go to: Http://www.dot.ca.gov

Caltrans Metric

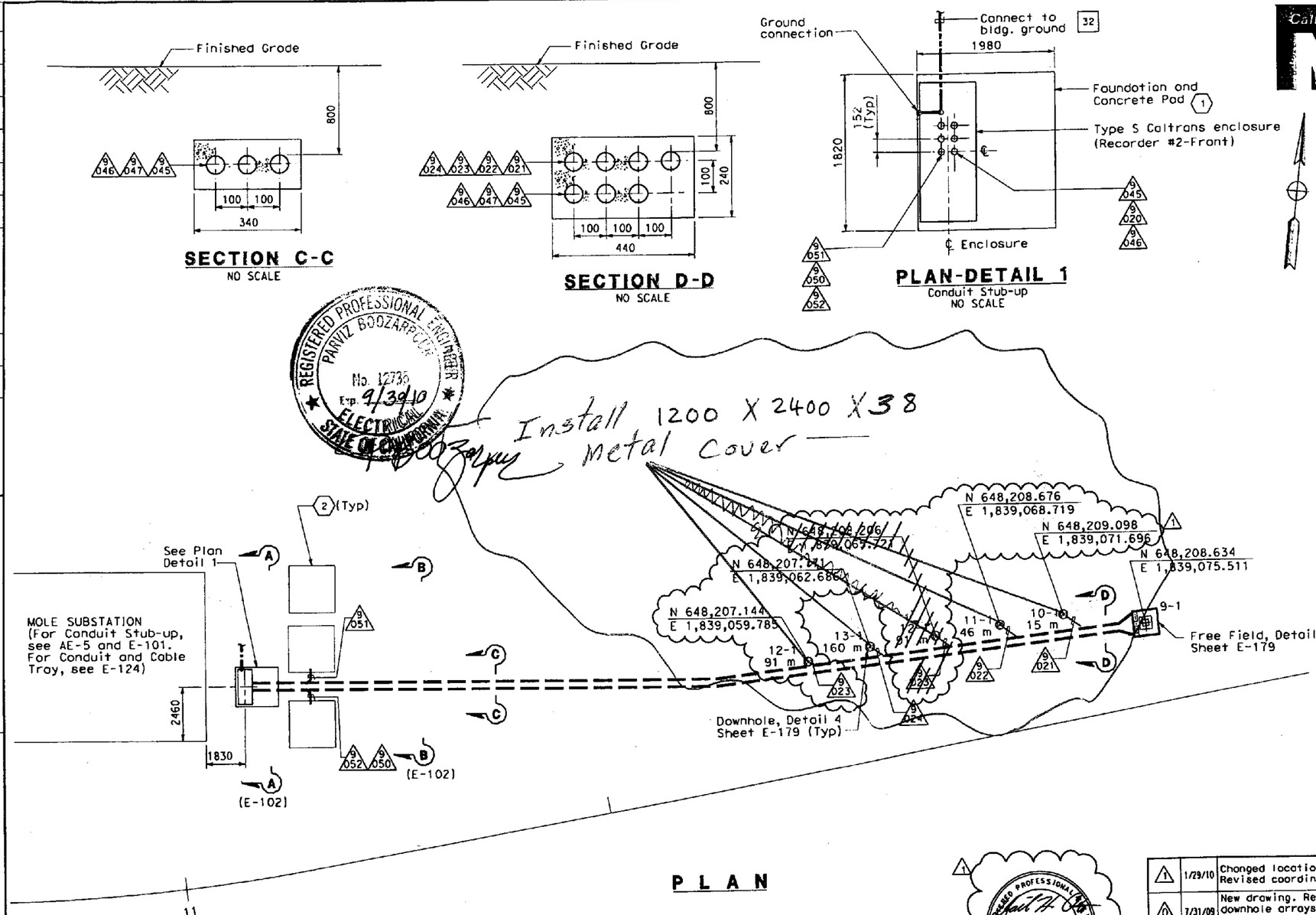

PLAN

SHEET NOTES:

(1) Contractor shall install concrete foundation per Caltrans standard plan ES-3C.

NOTES:

1. Exact location of downhole array is shown as noted or determined by Caltrans Engineer.
2. References:
   - For conduit and cable tray schedules, see sheets starting at E-224.
   - For strong motion sensor enclosures, see sheet E-181.
3. Downhole sensor cables will be furnished and installed in conduit by CGS.
4. Downhole sensor cables will be spliced to seismic cable by CGS.
5. Coordinate the exact termination of 103 mm PVC casing with Caltrans office of Earthquake engineering and CGS utilizing the P/S suspension logs provided by state forces.
6. Underground conduits shall be encased in concrete.
7. For Manholes and Duct banks Plan, see sheets E-80, E-81 and E-102.

REGISTERED PROFESSIONAL ENGINEER DAVID H. OTO No. 10699 Exp. 06/30/2011 ELECTRICAL STATE OF CALIFORNIA

MARK	DATE	DESCRIPTIONS	REV	CK	CCO NO.
1	1/29/10	Changed location of sensor 12-1. Revised coordinates.	SG	EJL	Conductor Change/ Misc.
0	7/31/09	New drawing. Relocated geotech downhole arrays. Added seismic recorder #2 enclosure	RSB	EJL	Geotech Arrays

REVISIONS

CONTRACT CHANGE ORDER NO. 128 Supp. #1
SHEET 2 OF 3

DETAILS
STRONG MOTION DETECTION SYSTEM
PLAN AT GRADE-MOLE SUBSTATION

SCALE: 1:100

E-173A

CALCULATED/ DESIGNED BY	DATE 2/09	REVISED BY	DATE REVISED
RSB	2/09		
CHECKED BY	EJL		

DESIGN OVERSIGHT
BEHZAD GOLEMOHAMMADI

STATE OF CALIFORNIA - DEPARTMENT OF TRANSPORTATION
Caltrans

THIS PLAN ACCURATE FOR ELECTRICAL WORK ONLY.

ALL DIMENSIONS ARE IN MILLIMETERS UNLESS OTHERWISE SHOWN

FOR REDUCED PLANS ORIGINAL SCALE IS IN MILLIMETERS 0 20 40 60 80

DGN FILE =>T:\13103\MS\pse\OTD-Contract 1\CCO\Electrical\CCO-Conductor change & misc\401201ud173Ar1.dgn
USERNAME =>llorico

CU 04251 | EA 0120L1

LAST REVISION 00-00-00
DATE PLOTTED => 2/2/2010
TIME PLOTTED => 1:38:24 PM

DIST	COUNTY	ROUTE	KILOMETER POST TOTAL PROJECT	SHEET NO	TOTAL SHEETS
04	Ala	80	1.6/2.7	551A R1	643

REGISTERED ELECTRICAL ENGINEER DATE

PLANS APPROVAL DATE

REGISTERED PROFESSIONAL ENGINEER FADI WALIEDDINE No. 11465 Exp. 12/31/09 ELECTRICAL STATE OF CALIFORNIA

PB POWER, Inc.
A Parsons Brinckerhoff Company
303 Second St., Suite 700N
San Francisco, CA 94107-1317

The State of California or its officers or agents shall not be responsible for the accuracy or completeness of electronic copies of this plan sheet.

Caltrans now has a web site! To get to the web site, go to http://www.dot.ca.gov

Caltrans Metric

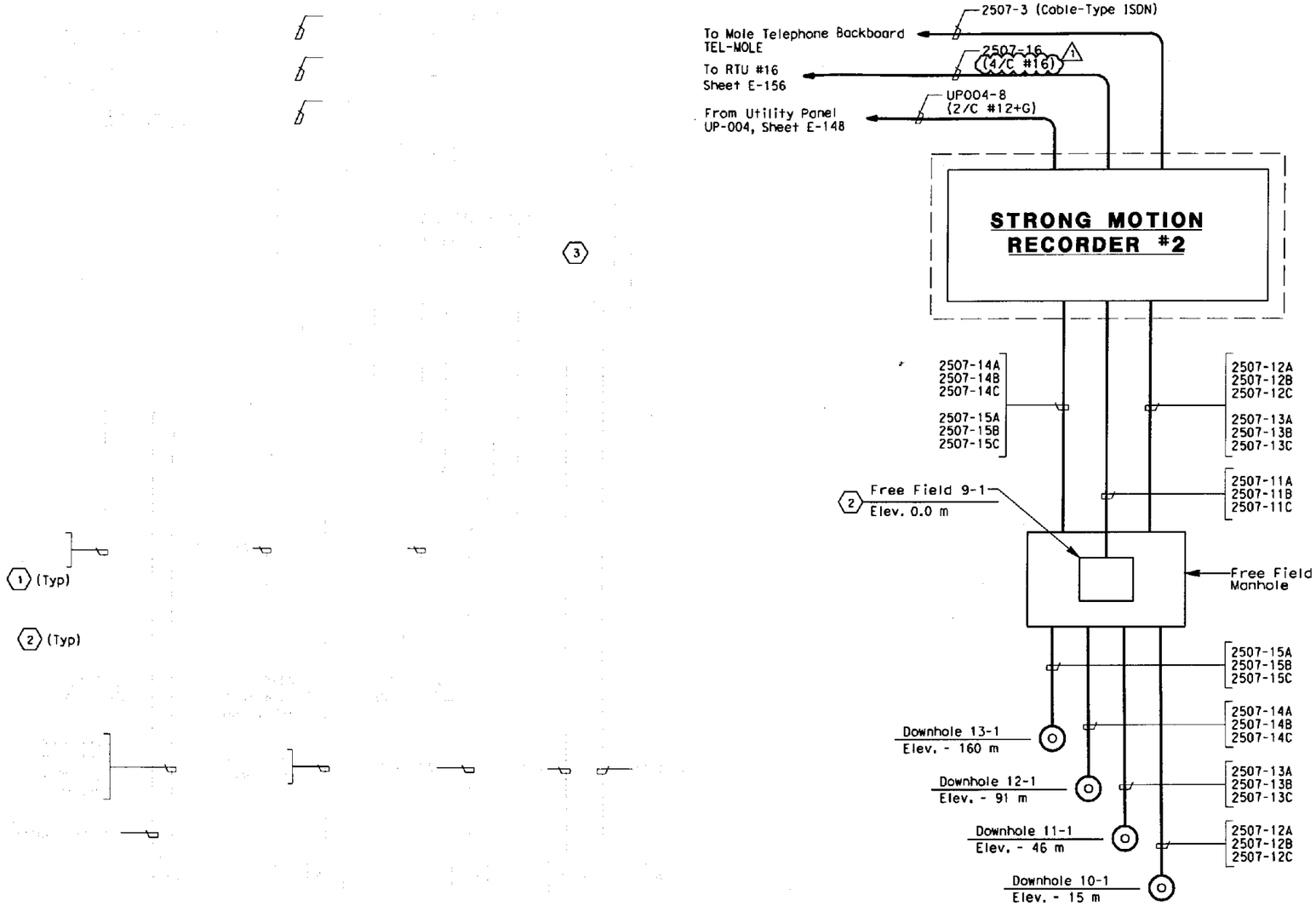

Downhole Arrays
East of Mole Substation

SHEET NOTES:

1. Strong motion sensor cables shall be type SSC, unless otherwise indicated.
2. Sensor enclosure with identification number as shown.
3. Strong Motion Recorder #1, installed by others.

NOTES:

1. References:
   - For the conduit and cable tray schedules, see sheets starting at E-224.
   - For Sensor and Recorder Schedule, see Sheet E-180.
   - For general notes of the Strong Motion Detection System, see Sheet E-173.

1 REGISTERED PROFESSIONAL ENGINEER DAVID H. OTO No. 10699 Exp. 06/30/2011 ELECTRICAL STATE OF CALIFORNIA

MARK	DATE	DESCRIPTIONS	REV	CK	CCO NO.
1	1/29/10	Changed conductor size to 4/C #16.	RSB	EJL	Conductor Change/ Misc.
0	7/31/09	New drawing. Relocated downhole arrays. Moved and added seismic recorder #2 and enclosure.	RSB	EJL	Geotech Arrays

REVISIONS

CONTRACT CHANGE ORDER NO. 128 Supp. #1
SHEET 3 OF 3

DETAILS
STRONG MOTION DETECTION SYSTEM CABLE BLOCK DIAGRAM
NO SCALE

E-180A

STATE OF CALIFORNIA - DEPARTMENT OF TRANSPORTATION
Caltrans

DESIGN OVERSIGHT
BEHZAD GOLEMOHAMMADI

CALCULATED/DESIGNED BY AB
CHECKED BY FK
DATE REVISED BY
DATE REVISED

LAST REVISION 00-00-00
DATE PLOTTED => 2/2/2010
TIME PLOTTED => 1:40:02 PM

FOR REDUCED PLANS ORIGINAL SCALE IS IN MILLIMETERS 0 20 40 60 80

DGN FILE =>T:\13103\MS\pse\OTD-Contract 1\CCO\Electrical\CCO-Conductor change & misc\40120lud180Ar1.dgn
USERNAME =>llorico
CU 04251
EA 012041

STATE OF CALIFORNIA - DEPARTMENT OF TRANSPORTATION

CONTRACT CHANGE ORDER MEMORANDUM

DATE: 4/29/2010 Page 1 of 1

TO: AMER BATA / BEN GHAFGHAZI	FILE: E.A. 04 - 0120L4
	CO-RTE-PM ALA-80-1.6/2.7
FROM: BEN GHAFGHAZI	FED. NO. NO FED AID
CCO#: 128 SUPPLEMENT#: 2 Category Code: AFZZ	CONTINGENCY BALANCE (incl. this change) $1,866,527.40
COST: $0.00 INCREASE ☐ DECREASE ☐	HEADQUARTERS APPROVAL REQUIRED? ☑ YES ☐ NO
SUPPLEMENTAL FUNDS PROVIDED: $0.00	IS THIS REQUEST IN ACCORDANCE WITH ENVIRONMENTAL DOCUMENTS? ☑ YES ☐ NO
CCO DESCRIPTION: Time Adjustment of 0 Days	**PROJECT DESCRIPTION:** Construct bridge, roadway, building and electrical system.

Original Contract Time:	Time Adj. This Change:	Previously Approved CCO Time Adjustments:	Percentage Time Adjusted: (including this change)	Total # of Unreconciled Deferred Time CCO(s): (including this change)
810 Day(s)	0 Day(s)	184 Day(s)	23 %	7

THIS CHANGE ORDER PROVIDES FOR:

A time adjustment of 0 (zero) working days, in accordance with Section 8-1.07, "Liquidated Damages", of the Standard Specifications.

It has been determined that the work of Contract Change Order No. 128, Supplements #0 and #1, has had no impact on the contractor's controlling operation. Therefore, a time extension of 0 days is recommended.

Total Time Adjustment = 0 Days

CONCURRED BY:		
Construction Engineer:	Ben Ghafghazi	Date 5/3/2010
Bridge Engineer:		Date
Project Engineer:		Date
Project Manager:		Date
FHWA Rep.:		Date
Environmental:		Date
Other (specify):		Date
Other (specify):		Date
District Prior Approval By:		Date
HQ (Issue Approve) By:		Date
Resident Engineer's Signature:		Date 5/3/2010

ESTIMATE OF COST

	THIS REQUEST	TOTAL TO DATE
ITEMS	$0.00	$0.00
FORCE ACCOUNT	$0.00	$0.00
AGREED PRICE	$0.00	$28,569.00
ADJUSTMENT	$0.00	$106,917.00
TOTAL	$0.00	$135,486.00

FEDERAL PARTICIPATION

☐ PARTICIPATING ☐ PARTICIPATING IN PART ☑ NONE
☐ NON-PARTICIPATING (MAINTENANCE) ☐ NON-PARTICIPATING

FEDERAL SEGREGATION (if more than one Funding Source or P.I.P. type)
☑ CCO FUNDED PER CONTRACT ☐ CCO FUNDED AS FOLLOWS

FEDERAL FUNDING SOURCE	PERCENT

ADA Notice: For individuals with sensory disabilities, this document is available in alternate formats. For information call: (916) 654-6410 or TDD (916) 654-3880 or write Records and Forms Management, 1120 N Street, MS-89, Sacramento, CA 95814.

STATE OF CALIFORNIA - DEPARTMENT OF TRANSPORTATION

CONTRACT CHANGE ORDER

Change Requested by: Engineer

CCO: 128	Suppl. No. 2	Contract No. 04 - 0120L4	Road ALA-80-1.6/2.7	FED. AID LOC.: NO FED AID

To: **M C M CONSTRUCTION INC**

You are directed to make the following changes from the plans and specifications or do the following described work not included in the plans and specifications for this contract. ***NOTE: This change order is not effective until approved by the Engineer.***

Description of work to be done, estimate of quantities and prices to be paid. (Segregate between additional work at contract price, agreed price and force account.) Unless otherwise stated, rates for rental of equipment cover only such time as equipment is actually used and no allowance will be made for idle time. This last percentage shown is the net accumulated increase or decrease from the original quantity in the Engineer's Estimate.

TIME ADJUSTMENT:

A determination of the delay in completion of the contract due to the work specified by Contract Change Order No. 128, Supplements #0 and #1, has been made in accordance with the provisions of Section 8-1.07 of the Standard Specifications.

Time Adjustment = 0 Days

Acceptance of this change order constitutes an agreement of full resolution of all time impact costs resulting from Change Order No. 128, Supplements #0 and #1.

This change order acts to resolve the deferred time issued on Change Order No. 128, Supplements #0 and #1, and no additional time shall be granted.

Estimated Cost: **Increase** ☐ **Decrease** ☐ **$0.00**

By reason of this order the time of completion will be adjusted as follows: 0 days

Signature	~~**Resident Engineer**~~ Ben Ghafghazi	**Date** 5/5/2010
Signature	**Construction Manager** Amer Bata	**Date** 5/3/10
Signature	**Construction Manager** Amer Bata	**Date** 7/14/10

We the undersigned contractor, have given careful consideration to the change proposed and agree, if this proposal is approved, that we will provide all equipment, furnish the materials, except as may otherwise be noted above, and perform all services necessary for the work above specified, and will accept as full payment therefor the prices shown above.

NOTE: If you, the contractor, do not sign acceptance of this order, your attention is directed to the requirements of the specifications as to proceeding with the ordered work and filing a written protest within the time therein specified.

Signature	**(Print name and title)** JAMES A. CARTER, PRESIDENT	**Date** 7/14/10

STATE OF CALIFORNIA - DEPARTMENT OF TRANSPORTATION

CONTRACT CHANGE ORDER

Change Requested by: Engineer

CCO 129	Suppl. No. 0	Contract No. 04 - 0120L4	Road ALA-80-1.6/2.7	FED. AID LOC.: NO FED AID

TO: **M C M CONSTRUCTION INC**

You are directed to make the following changes from the plans and specifications or do the following described work not included in the plans and specifications for this contract. ***NOTE: This change order is not effective until approved by the Engineer.***

Description of work to be done, estimate of quantities and prices to be paid. (Segregate between additional work at contract price, agreed price and force account.) Unless otherwise stated, rates for rental of equipment cover only such time as equipment is actually used and no allowance will be made for idle time. This last percentage shown is the net accumulated increase or decrease from the original quantity in the Engineer's Estimate.

Extra Work at Force Account:

Provide labor, equipment, and material necessary to remove lost deck forms from cells with permanent utility access openings. Forms within the cells shall be removed to provide minimum 900 mm x 600 mm crawl space throughout the length of the cells. All work shall be in accordance with Section 51-1.05, "Form," of the Standard Specifications.

Estimated cost of Extra Work at Force Account $50,000.00

Estimated Cost: **Increase** ☑ **Decrease** ☐ **$50,000.00**

By reason of this order the time of completion will be adjusted as follows: 0 days

Signature	**Resident Engineer** BEN GHAFGHAZI	**Date** 10/26/09
Signature	**Construction Engineer** Ben Ghafghazi	**Date** 10/26/09
Signature	**Construction Engineer** Ben Ghafghazi	**Date** 12/3/09

We the undersigned contractor, have given careful consideration to the change proposed and agree, if this proposal is approved, that we will provide all equipment, furnish the materials, except as may otherwise be noted above, and perform all services necessary for the work above specified, and will accept as full payment therefor the prices shown above.

NOTE: If you, the contractor, do not sign acceptance of this order, your attention is directed to the requirements of the specifications as to proceeding with the ordered work and filing a written protest within the time therein specified.

Signature	**(Print name and title)** EDMUNDO A. PUCHI, TREASURER	**Date** 11/16/09

STATE OF CALIFORNIA - DEPARTMENT OF TRANSPORTATION

CONTRACT CHANGE ORDER MEMORANDUM

DATE: 10/26/2009 Page 1 of 1

TO: AMER BATA / BEN GHAFGHAZI

FROM: BEN GHAFGHAZI

FILE: E.A. 04 - 0120L4
CO-RTE-PM ALA-80-1.6/2.7
FED. NO. NO FED AID

CCO#: 129	SUPPLEMENT#: 0	Category Code: CHSB	CONTINGENCY BALANCE (incl. this change) $3,785,294.40

COST: $50,000.00 INCREASE ☑ DECREASE ☐

HEADQUARTERS APPROVAL REQUIRED? ☐ YES ☑ NO

SUPPLEMENTAL FUNDS PROVIDED: $0.00

IS THIS REQUEST IN ACCORDANCE WITH ENVIRONMENTAL DOCUMENTS? ☑ YES ☐ NO

CCO DESCRIPTION:
Remove lost deck forms.

PROJECT DESCRIPTION:
Construct bridge, roadway, building and electrical system.

Original Contract Time:	Time Adj. This Change:	Previously Approved CCO Time Adjustments:	Percentage Time Adjusted: (including this change)	Total # of Unreconciled Deferred Time CCO(s): (including this change)
810 Day(s)	0 Day(s)	184 Day(s)	23 %	13

THIS CHANGE ORDER PROVIDES FOR:
Removing lost deck forms from cells with permanent utility access openings. Forms within the cells shall be removed to provide minimum 900 mm x 600 mm crawl space throughout the length of the cells.

This change is necessary to provide adequate space for personnel to access utility lines within the bridge. Section 10-1.53, "Concrete Structures," of the Special Provisions only addresses removing forms that obstruct or conflict with utility openings. It does not address personnel access. This CCO adds a 900 mm x 600 mm crawl space in accordance with Section 51-1.05. "Forms," of the Standard Specifications.

This work will be paid as Extra Work at Force Account for $50,000.00, which can be financed from the contingency fund.

Design and Maintenance concurrence is not necessary since this is work is covered in the Standard Specifications.

No adjustment of contract time is warranted since this change does not affect the controlling operation.

CONCURRED BY:

Construction Engineer:	Ben Ghafghazi	Date 10/26/09
Bridge Engineer:	Mehran Ardakanian	Date
Project Engineer:		Date
Project Manager:		Date
FHWA Rep.:		Date
Environmental:		Date
Other (specify):		Date
Other (specify):		Date
District Prior Approval By:		Date
HQ (Issue Approve) By:		Date
Resident Engineer's Signature:		Date 10/26/09

ESTIMATE OF COST

	THIS REQUEST	TOTAL TO DATE
ITEMS	$0.00	$0.00
FORCE ACCOUNT	$50,000.00	$50,000.00
AGREED PRICE	$0.00	$0.00
ADJUSTMENT	$0.00	$0.00
TOTAL	$50,000.00	$50,000.00

FEDERAL PARTICIPATION

☐ PARTICIPATING ☐ PARTICIPATING IN PART ☑ NONE
☐ NON-PARTICIPATING (MAINTENANCE) ☐ NON-PARTICIPATING

FEDERAL SEGREGATION (if more than one Funding Source or P.I.P. type)
☑ CCO FUNDED PER CONTRACT ☐ CCO FUNDED AS FOLLOWS

FEDERAL FUNDING SOURCE	PERCENT

ADA Notice: For individuals with sensory disabilities, this document is available in alternate formats. For information call: (916) 654-6410 or TDD (916) 654-3880 or write Records and Forms Management, 1120 N Street, MS-89, Sacramento, CA 95814.

STATE OF CALIFORNIA - DEPARTMENT OF TRANSPORTATION

CONTRACT CHANGE ORDER MEMORANDUM

DATE: 3/4/2010 Page 1 of 1

TO: AMER BATA / BEN GHAFGHAZI	FILE: E.A. 04 - 0120L4
FROM: BEN GHAFGHAZI	CO-RTE-PM ALA-80-1.6/2.7
	FED. NO. NO FED AID
CCO#: 129 SUPPLEMENT#: 1 Category Code: CHSB	CONTINGENCY BALANCE (incl. this change) $2,146,116.40
COST: $50,000.00 INCREASE ☑ DECREASE ☐	HEADQUARTERS APPROVAL REQUIRED? ☐ YES ☑ NO
SUPPLEMENTAL FUNDS PROVIDED: $0.00	IS THIS REQUEST IN ACCORDANCE WITH ENVIRONMENTAL DOCUMENTS? ☑ YES ☐ NO
CCO DESCRIPTION: Remove Add'l Form Due to Utility Changes	**PROJECT DESCRIPTION:** Construct bridge, roadway, building and electrical system.

Original Contract Time:	Time Adj. This Change:	Previously Approved CCO Time Adjustments:	Percentage Time Adjusted: (including this change)	Total # of Unreconciled Deferred Time CCO(s): (including this change)
810 Day(s)	0 Day(s)	184 Day(s)	23 %	15

THIS CHANGE ORDER PROVIDES FOR:

Additional funds for removing lost deck forms from cells with permanent utility access openings. Forms within the cells shall be removed to provide minimum 900 mm x 600 mm crawl space throughout the length of the cells.

The original change order was necessary because the relocated utility lines in the cells added permanent access points that require adequate crawl space for maintenance personnel. The locations of the utility lines going through the OTD superstructure were changed in previous change orders 78, 86 and 101, but did not call for the removal of lost deck forms. Based on work performed to date it is anticipated that an additional $50,000.00 is required through the completion of the contract.

Section 10-1.53, "Concrete Structures," of the Special Provisions only addresses removing forms that obstruct or conflict with utility openings. It does not address personnel access. This CCO adds a 900 mm x 600 mm crawl space in accordance with Section 51-1.05. "Forms," of the Standard Specifications, only in cells with added permanent utility openings.

This work will be paid as Extra Work at Force Account for $50,000.00, which can be financed from the contingency fund.

This change order has been discussed and concurred with Mike Forner, SFOBB Principal Construction Engineer, and Patrick Treacy, HQ Construction Coordinator. Design and Maintenance concurrence is not necessary since this is work is covered in the Standard Specifications.

No adjustment of contract time is warranted since this change does not affect the controlling operation.

CONCURRED BY:

Construction Engineer:	Ben Ghafghazi	Date 4/5/2010	
Bridge Engineer:		Date	
Project Engineer:		Date	
Project Manager:		Date	
FHWA Rep.:		Date	
Environmental:		Date	
Other (specify):	Mike Forner, Principal TE	Date	4/1/10
Other (specify):	Patrick Treacy, HQ Const. Coord.	Date	4/1/10
District Prior Approval By:		Date	
HQ (Issue Approve) By:		Date	
Resident Engineer's Signature:		Date 4/5/2010	

ESTIMATE OF COST

	THIS REQUEST	TOTAL TO DATE
ITEMS	$0.00	$0.00
FORCE ACCOUNT	$50,000.00	$100,000.00
AGREED PRICE	$0.00	$0.00
ADJUSTMENT	$0.00	$0.00
TOTAL	$50,000.00	$100,000.00

FEDERAL PARTICIPATION

☐ PARTICIPATING ☐ PARTICIPATING IN PART ☑ NONE
☐ NON-PARTICIPATING (MAINTENANCE) ☐ NON-PARTICIPATING

FEDERAL SEGREGATION (if more than one Funding Source or P.I.P. type)
☑ CCO FUNDED PER CONTRACT ☐ CCO FUNDED AS FOLLOWS

FEDERAL FUNDING SOURCE	PERCENT

ADA Notice: For individuals with sensory disabilities, this document is available in alternate formats. For information call: (916) 654-6410 or TDD (916) 654-3880 or write Records and Forms Management, 1120 N Street, MS-89, Sacramento, CA 95814.

STATE OF CALIFORNIA - DEPARTMENT OF TRANSPORTATION

CONTRACT CHANGE ORDER

Change Requested by: Engineer

CCO: 129	Suppl. No. 1	Contract No. 04 - 0120L4	Road ALA-80-1.6/2.7	FED. AID LOC.: NO FED AID

To: **M C M CONSTRUCTION INC**

You are directed to make the following changes from the plans and specifications or do the following described work not included in the plans and specifications for this contract. ***NOTE: This change order is not effective until approved by the Engineer.***

Description of work to be done, estimate of quantities and prices to be paid. (Segregate between additional work at contract price, agreed price and force account.) Unless otherwise stated, rates for rental of equipment cover only such time as equipment is actually used and no allowance will be made for idle time. This last percentage shown is the net accumulated increase or decrease from the original quantity in the Engineer's Estimate.

Extra Work at Force Account:

As directed by the Engineer, provide labor, equipment, and material necessary to remove additional lost deck forms where there are permanent utility access openings. Forms within the cells shall be removed to provide minimum 900 mm x 600 mm crawl space throughout the length of the cells. Exact limits of this work will be determined by the Engineer in the field.

Estimated cost of Extra Work at Force Account $50,000.00

Estimated Cost: **Increase** ☑ **Decrease** ☐ **$50,000.00**

By reason of this order the time of completion will be adjusted as follows: 0 days

Signature	**Resident Engineer** BEN GHAFGHAZI	**Date** 4/5/2010
Signature	**Construction Engineer** Ben Ghafghazi	**Date** 4/5/2010
Signature	**Construction Manager** Amer Bata	**Date** 4/8/2010

We the undersigned contractor, have given careful consideration to the change proposed and agree, if this proposal is approved, that we will provide all equipment, furnish the materials, except as may otherwise be noted above, and perform all services necessary for the work above specified, and will accept as full payment therefor the prices shown above.

NOTE: If you, the contractor, do not sign acceptance of this order, your attention is directed to the requirements of the specifications as to proceeding with the ordered work and filing a written protest within the time therein specified.

Signature N/A	**(Print name and title)**	**Date**

STATE OF CALIFORNIA - DEPARTMENT OF TRANSPORTATION

CONTRACT CHANGE ORDER

Change Requested by: Engineer

CCO 130	Suppl. No. 0	Contract No. 04 - 0120L4	Road ALA-80-1.6/2.7	FED. AID LOC.: NO FED AID

To: **M C M CONSTRUCTION INC**

You are directed to make the following changes from the plans and specifications or do the following described work not included in the plans and specifications for this contract. ***NOTE: This change order is not effective until approved by the Engineer.***

Description of work to be done, estimate of quantities and prices to be paid. (Segregate between additional work at contract price, agreed price and force account.) Unless otherwise stated, rates for rental of equipment cover only such time as equipment is actually used and no allowance will be made for idle time. This last percentage shown is the net accumulated increase or decrease from the original quantity in the Engineer's Estimate.

Relocate k-rail on EB 80 from Sta. E 86+75 to E 89+90 per sheets 2 of 6 and 3 of 6 of this CCO. Install Drainage System (4) per layout on sheets 4 of 6 though 6 of 6 of this CCO. All work shall be in accordance with Sections 10-1.100, "Concrete Barrier (Type K)," and 10-1.78, "Alternative Slotted Pipe," of the Special Provisions.

There shall be no additional cost for this CCO.

Estimated Cost: **Increase** ☐ **Decrease** ☐ **$0.00**

By reason of this order the time of completion will be adjusted as follows: 0 days

Signature	**Resident Engineer** BEN GHAFGHAZI	**Date** 11/16/09
Signature	**Construction Engineer** Ben Ghafghazi	**Date** 11/16/09
Signature	**Construction Engineer** Ben Ghafghazi	**Date** 3/15/2010

We the undersigned contractor, have given careful consideration to the change proposed and agree, if this proposal is approved, that we will provide all equipment, furnish the materials, except as may otherwise be noted above, and perform all services necessary for the work above specified, and will accept as full payment therefor the prices shown above.

NOTE: If you, the contractor, do not sign acceptance of this order, your attention is directed to the requirements of the specifications as to proceeding with the ordered work and filing a written protest within the time therein specified.

Signature	**(Print name and title)** EDMUNDO A. PUCHI, TREASURER	**Date** 3/2/10

STATE OF CALIFORNIA - DEPARTMENT OF TRANSPORTATION

CONTRACT CHANGE ORDER MEMORANDUM

DATE: 11/16/2009 Page 1 of 1

AMER BATA / BEN GHAFGHAZI

FROM: BEN GHAFGHAZI

FILE: **E.A.** 04 - 0120L4
CO-RTE-PM ALA-80-1.6/2.7
FED. NO. NO FED AID

CCO#: **130** SUPPLEMENT#: **0** Category Code: **CKPJ**

CONTINGENCY BALANCE (incl. this change) **$3,783,698.40**

COST: **$0.00** INCREASE ☐ DECREASE ☐

HEADQUARTERS APPROVAL REQUIRED? ☐ YES ☑ NO

SUPPLEMENTAL FUNDS PROVIDED: **$0.00**

IS THIS REQUEST IN ACCORDANCE WITH ENVIRONMENTAL DOCUMENTS? ☑ YES ☐ NO

CCO DESCRIPTION:
Relocate DS4 and k-rail

PROJECT DESCRIPTION:
Construct bridge, roadway, building and electrical system.

Original Contract Time:	Time Adj. This Change:	Previously Approved CCO Time Adjustments:	Percentage Time Adjusted: (including this change)	Total # of Unreconciled Deferred Time CCO(s): (including this change)
810 Day(s)	**0** Day(s)	**184** Day(s)	**23** %	**13**

THIS CHANGE ORDER PROVIDES FOR:
Relocating k-rail on EB 80 from Sta. E 86+75 to E 89+90 per sheets 2 of 6 and 3 of 6 of the CCO. Installing Drainage System (4) per layout on sheets 4 of 6 though 6 of 6 of the CCO.

This change is necessary to provide a shoulder on EB 80 between the above limits and relocate Drainage System (4) from the traveled way. Currently the k-rail is installed along the ETW. Per the original plans Drainage System (4) is to be installed on the freeway side of the k-rail. This installation places the drainage system in the traveled way. By relocating the 3.0 M from the ETW a shoulder will be provided. With this shoulder in place the drainage system can be relocated from the traveled way and to the shoulder.

There will be no additional cost due to this change.

This change has been requested by Jaime Gutierrez of Project Development (memo attached). This change has been discussed and concurred with Garjong Fong of Hydraulics, Shi Lam of Traffic Safety, and Philip Harsono of Maintenance.

No adjustment of contract time is warranted since this change does not affect the controlling operation.

CONCURRED BY:

Construction Engineer:	Ben Ghafghazi	Date 11/16/09
Bridge Engineer:		Date
Project Engineer:	Jaime Gutierrez	Date 9/28/09
Project Manager:		Date
FHWA Rep.:		Date
Environmental:		Date
Other (specify):	Shi Lam, Traffic Safety	Date 10/7/09
Other (specify):	Garjong Fong, Hydraulics	Date 9/28/09
District Prior Approval By:		Date
HQ (Issue Approve) By:		Date
Resident Engineer's Signature:		Date

ESTIMATE OF COST

	THIS REQUEST	TOTAL TO DATE
ITEMS	$0.00	$0.00
FORCE ACCOUNT	$0.00	$0.00
AGREED PRICE	$0.00	$0.00
ADJUSTMENT	$0.00	$0.00
TOTAL	$0.00	$0.00

FEDERAL PARTICIPATION

☐ PARTICIPATING ☐ PARTICIPATING IN PART ☑ NONE
☐ NON-PARTICIPATING (MAINTENANCE) ☐ NON-PARTICIPATING

FEDERAL SEGREGATION (if more than one Funding Source or P.I.P. type)
☑ CCO FUNDED PER CONTRACT ☐ CCO FUNDED AS FOLLOWS

FEDERAL FUNDING SOURCE	PERCENT

ADA Notice: For individuals with sensory disabilities, this document is available in alternate formats. For information call: (916) 654-6410 or TDD (916) 654-3880 or write Records and Forms Management, 1120 N Street, MS-89, Sacramento, CA 95814.

DIST	COUNTY	ROUTE	KILOMETER POST TOTAL PROJECT	SHEET No.	TOTAL SHEETS
04	Ala	80	1.6/2.7	6R1	643

REGISTERED CIVIL ENGINEER 8-29-06

1-29-07
PLANS APPROVAL DATE

REGISTERED PROFESSIONAL ENGINEER J.E. Gutierrez No. 52324 Exp. 12-31-08 CIVIL STATE OF CALIFORNIA

The State of California or its officers or agents shall not be responsible for the accuracy or completeness of electronic copies of this plan sheet.

To get to the Caltrans web site, go to: http://www.dot.ca.gov

REGISTERED PROFESSIONAL ENGINEER SHI-CHUNG HU No. 62495 Exp. 9-30-09 CIVIL STATE OF CALIFORNIA

SEAL IS VALID FOR 1 ONLY.

Caltrans Metric

REVISIONS					
MARK	DESCRIPTIONS	REV	CK	CCO #	DATE
1	Moved Conc Barr (Type K) to provide 3.0m Shld from E 86+75 to E 89+80	CH	RR	130	9/29/09

CURVE DATA

No.	R	Δ	T	L	N-Coordinate	E-Coordinate
1	6001	04° 59' 10''	261.285	522.241	642322.653	1839529.932
2	6001	04° 59' 10''	261.287	522.245	642284.638	1839557.637
3	1400	17° 41' 27''	217.866	432.265	649727.847	1839305.278
4	3000	07° 02' 04''	184.392	368.320	651275.180	1839079.083
5	209.900	05° 25' 11''	9.935	19.855	648020.924	1839229.184
6	600	07° 55' 57''	41.601	83.069	647644.810	1839293.916
7	1000	03° 07' 22''	27.257	54.501	649244.276	1839249.765
8	2027.944	03° 31' 23''	62.368	124.697	650358.587	1839199.319

FOR COMPLETE RIGHT OF WAY AND ACCURATE ACCESS DATA, SEE RIGHT OF WAY RECORD MAPS AT DISTRICT OFFICE.

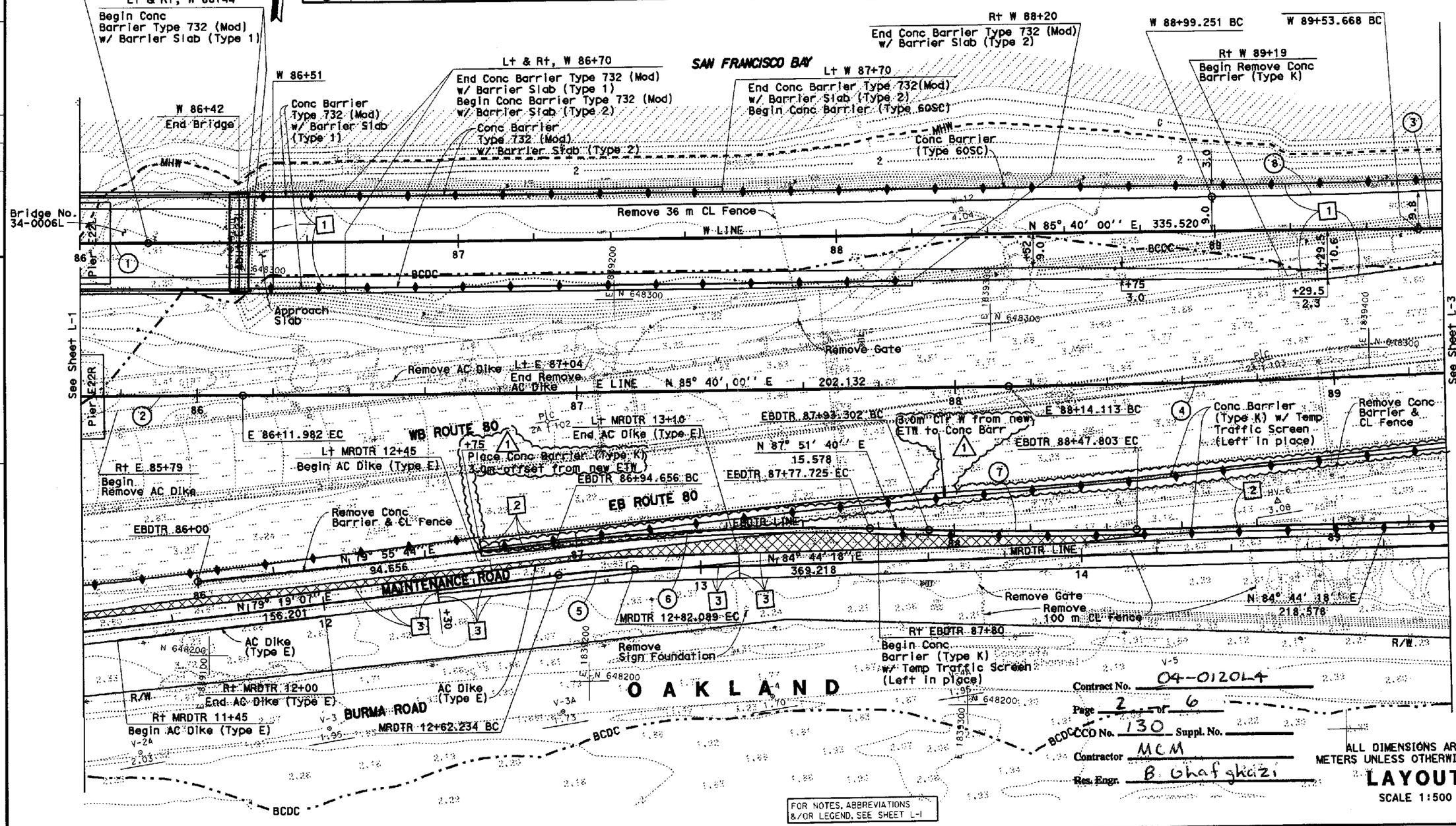

FOR NOTES, ABBREVIATIONS &/OR LEGEND, SEE SHEET L-1

Contract No. 04-0120L4
Page 2 of 6
CCO No. 130 Suppl. No.
Contractor MCM
Res. Engr. B. Ghafghazi

ALL DIMENSIONS ARE IN METERS UNLESS OTHERWISE SHOWN

LAYOUT

SCALE 1:500

L-2

STATE OF CALIFORNIA - DEPARTMENT OF TRANSPORTATION
Caltrans
TOLL BRIDGE

PROJECT ENGINEER J. E. GUTIERREZ

CALCULATED/DESIGNED BY | CHECKED BY | DATE | REVISED BY | DATE REVISED

FOR REDUCED PLANS ORIGINAL SCALE IS IN MILLIMETERS 0 20 40 60 80

USERNAME => s128632
DGN FILE => 40120leq002.cco

CU 04251 | EA 0120L1

LAST REVISION 08-22-06 | DATE PLOTTED => 30-SEP-2009 | TIME PLOTTED => 16:25

FOR COMPLETE RIGHT OF WAY AND ACCURATE ACCESS DATA, SEE RIGHT OF WAY RECORD MAPS AT DISTRICT OFFICE.

REGISTERED PROFESSIONAL ENGINEER SHI-CHUNG HO No. 62495 Exp. 9-30-09 CIVIL STATE OF CALIFORNIA

SEAL IS VALID FOR 1 ONLY.

REVISIONS					
MARK	DESCRIPTIONS	REV	CK	CCO #	DATE
1	Moved Conc Barr (Type K) to provide 3.0m Shld from E 86+75 to E 89+80	CH	RR	130	9/29/09

CURVE DATA

No.	R	Δ	T	L	N-Coordinate	E-Coordinate
1	600	14° 29′ 50″	76.315	151.815	648861.271	1839522.575
2	250	10° 41′ 16″	23.385	46.634	648073.873	1839844.885
3	1400	17° 41′ 27″	217.866	432.265	649727.847	1839305.278
4	3000	07° 02′ 04″	184.392	368.320	651275.180	1839079.083
5	670	20° 22′ 58″	120.447	238.348	648935.711	1839497.685
6	969.750	04° 33′ 19″	38.570	77.099	649310.326	1839343.966
7	5200	00° 17′ 45″	13.420	26.839	653443.405	1838442.445
8	695.100	04° 43′ 10″	28.643	57.254	649049.956	1839438.312
9	2027.944	03° 31′ 23″	62.368	124.697	650358.587	1839199.319
10	1102.150	09° 18′ 46″	89.769	179.142	649439.098	1839318.879

Contract No. 04-012CL4
Page 3 of 6
CCO No. 130 Suppl. No.
Contractor MCM
Res. Engr. B. Ghafghazi

Caltrans Metric

DIST	COUNTY	ROUTE	KILOMETER POST TOTAL PROJECT	SHEET No	TOTAL SHEETS
04	Ala	80	1.6/2.7	7R1	643

REGISTERED CIVIL ENGINEER 8-29-06
1-29-07 PLANS APPROVAL DATE
REGISTERED PROFESSIONAL ENGINEER J.E. Gutierrez 52324 Exp. 12-31-08 CIVIL STATE OF CALIFORNIA

The State of California or its officers or agents shall not be responsible for the accuracy or completeness of electronic copies of this plan sheet.

To get to the Caltrans web site, go to: http://www.dot.ca.gov

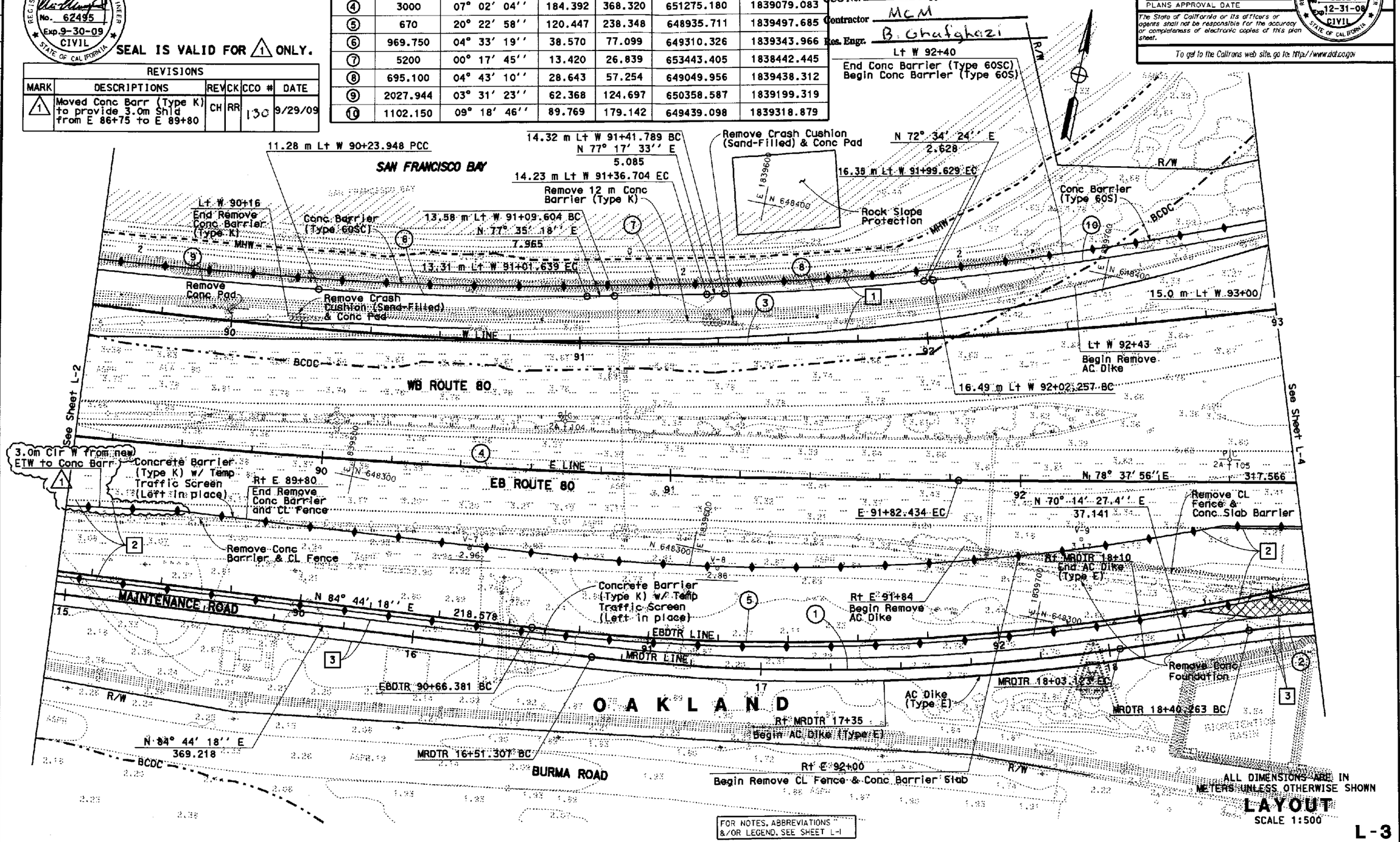

FOR NOTES, ABBREVIATIONS &/OR LEGEND, SEE SHEET L-1

ALL DIMENSIONS ARE IN METERS UNLESS OTHERWISE SHOWN

LAYOUT
SCALE 1:500

L-3

STATE OF CALIFORNIA - DEPARTMENT OF TRANSPORTATION
Caltrans
TOLL BRIDGE
PROJECT ENGINEER J. E. GUTIERREZ
CALCULATED/DESIGNED BY | DATE | REVISED BY
CHECKED BY | DATE REVISED

LAST REVISION 08-22-06 | DATE PLOTTED => 30-SEP-2009 | TIME PLOTTED => 16:44

FOR REDUCED PLANS ORIGINAL SCALE IS IN MILLIMETERS 0 20 40 60 80

USERNAME => s128632
DGN FILE => 401201ea003.cco

CU 04251 | EA 0120L1

DIST	COUNTY	ROUTE	KILOMETER POST TOTAL PROJECT	SHEET No	TOTAL SHEETS
04	Ala	80	1.6/2.7	40R2	643

REGISTERED CIVIL ENGINEER 8-30-06

1-29-07
PLANS APPROVAL DATE

REGISTERED PROFESSIONAL ENGINEER G. Fong 52275 Exp. 12-31-08 CIVIL STATE OF CALIFORNIA

The State of California or its officers or agents shall not be responsible for the accuracy or completeness of electronic copies of this plan sheet.

To get to the Caltrans web site, go to: http://www.dot.ca.gov

Caltrans Metric

REVISIONS					
MARK	DESCRIPTIONS	REV	CK	CCO #	DATE
1	Moved inlet location and pipe size	GF	CM	111	3/19/09
2	Moved entire 4 Southward	CH	GF	130	9/22/09

REGISTERED PROFESSIONAL ENGINEER SHI-CHUNG HO No. 62495 Exp. 9-30-09 CIVIL STATE OF CALIFORNIA

SEAL IS VALID FOR 2 ONLY.

Contract No. 04-0120L4

Page 4 of 6

CCO No. 130 Suppl. No.

Contractor MCM

Res. Engr. B. Ghafghazi

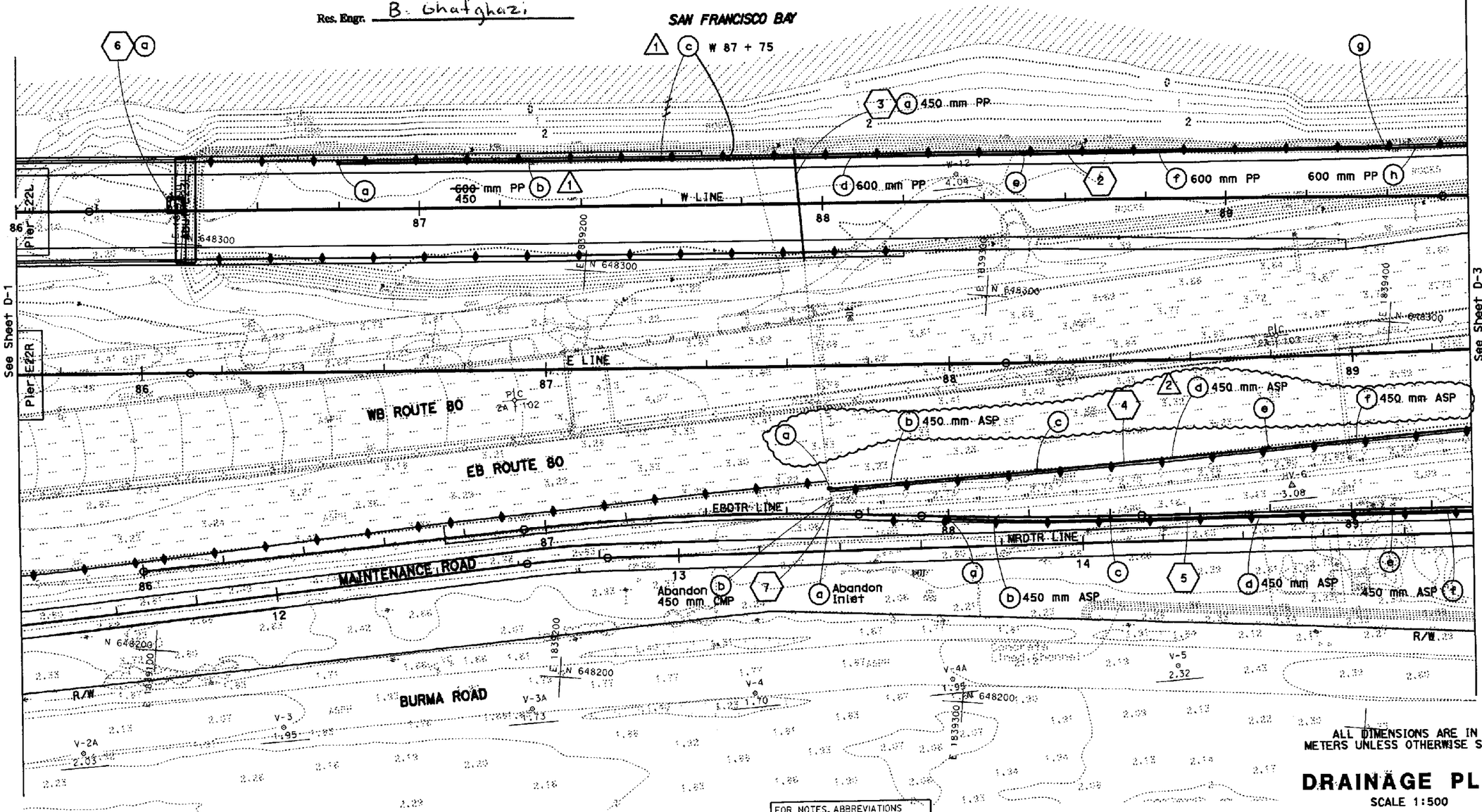

ALL DIMENSIONS ARE IN METERS UNLESS OTHERWISE SHOWN

FOR NOTES, ABBREVIATIONS &/OR LEGEND, SEE SHEET D-1

THIS PLAN ACCURATE FOR DRAINAGE WORK ONLY.

DRAINAGE PLAN

SCALE 1:500

D-2

STATE OF CALIFORNIA - DEPARTMENT OF TRANSPORTATION	PROJECT ENGINEER	CALCULATED/ DESIGNED BY	DATE	REVISED BY
Caltrans	J. E. GUTIERREZ	CHECKED BY		DATE REVISED

TOLL BRIDGE

LAST REVISION 08-22-06 | DATE PLOTTED => 25-SEP-2009 | TIME PLOTTED => 15:06

FOR REDUCED PLANS ORIGINAL SCALE IS IN MILLIMETERS 0 20 40 60 80

USERNAME => s128632
DGN FILE => 40120lia002.cco

CU 04251 | EA 0120L1

REVISIONS					
MARK	DESCRIPTIONS	REV	CK	CCO #	DATE
1	Moved entire 4 Southward	CH	GF	130	9/22/09

REGISTERED PROFESSIONAL ENGINEER CHI-CHUNG HO No. 62495 Exp. 9-30-09 CIVIL STATE OF CALIFORNIA

SEAL IS VALID FOR 1 ONLY.

Contract No. 04-0120L4
Page 5 of 6
CCO No. 130 Suppl. No.
Contractor MCM
Res. Engr. B. Ghafghazi

Caltrans Metric

DIST	COUNTY	ROUTE	KILOMETER POST TOTAL PROJECT	SHEET No	TOTAL SHEETS
04	Ala	80	1.6/2.7	41R1	643

REGISTERED CIVIL ENGINEER 8-30-06
1-29-07
PLANS APPROVAL DATE

REGISTERED PROFESSIONAL ENGINEER G. Fong 52275 Exp. 12-31-08 CIVIL STATE OF CALIFORNIA

The State of California or its officers or agents shall not be responsible for the accuracy or completeness of electronic copies of this plan sheet.

To get to the Caltrans web site, go to: http://www.dot.ca.gov

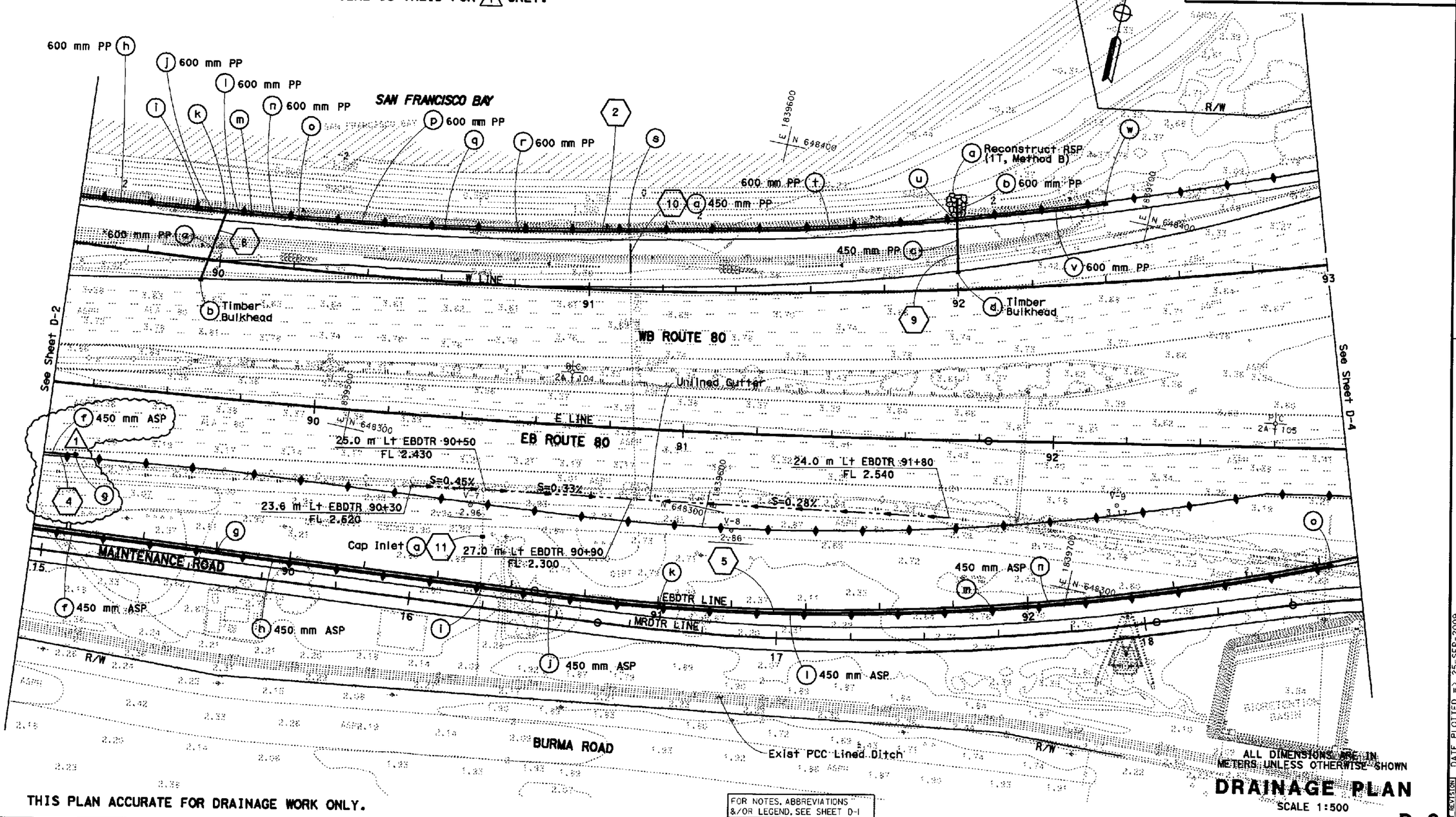

THIS PLAN ACCURATE FOR DRAINAGE WORK ONLY.

FOR NOTES, ABBREVIATIONS &/OR LEGEND, SEE SHEET D-1

ALL DIMENSIONS ARE IN METERS UNLESS OTHERWISE SHOWN

DRAINAGE PLAN

SCALE 1:500

D-3

STATE OF CALIFORNIA - DEPARTMENT OF TRANSPORTATION
Caltrans
TOLL BRIDGE

PROJECT ENGINEER J. E. GUTIERREZ

CALCULATED/DESIGNED BY | DATE | REVISED BY
CHECKED BY | DATE REVISED

LAST REVISION 12-06-06
DATE PLOTTED => 25-SEP-2009
TIME PLOTTED => 15:05

FOR REDUCED PLANS ORIGINAL SCALE IS IN MILLIMETERS 0 20 40 60 80

USERNAME => s128632
DGN FILE => 4012011a003.cco

CU 04251 | EA 0120L1

DIST	COUNTY	ROUTE	KILOMETER POST TOTAL PROJECT	SHEET No	TOTAL SHEETS
04	Ala	80	1.6/2.7	46R1	643

REGISTERED CIVIL ENGINEER 8-29-06

1-29-07
PLANS APPROVAL DATE

REGISTERED PROFESSIONAL ENGINEER A.G. Ureta No. 67663 Exp. 6-30-07 CIVIL STATE OF CALIFORNIA

The State of California or its officers or agents shall not be responsible for the accuracy or completeness of electronic copies of this plan sheet.

To get to the Caltrans web site, go to: http://www.dot.ca.gov

Caltrans Metric

REVISIONS					
MARK	DESCRIPTIONS	REV	CK	CCO #	DATE
1	Moved entire Southward (4)	CH	GF	130	9/22/09

REGISTERED PROFESSIONAL ENGINEER SHI-CHUNG HU No. 62495 Exp. 9-30-09 CIVIL STATE OF CALIFORNIA

SEAL IS VALID FOR 1 ONLY.

Contract No. 04-0120L4
Page 6 of 6
CCO No. 130 Suppl. No.
Contractor MCM
Res. Engr. B. Ghafghazi

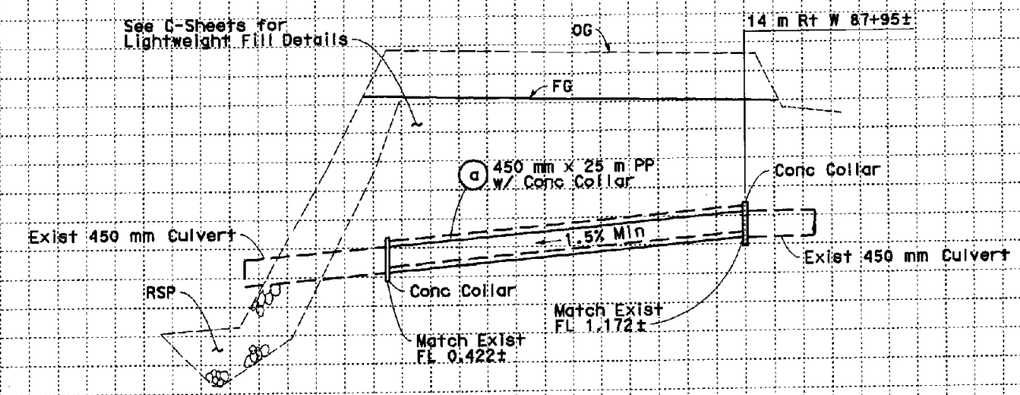

DRAINAGE SYSTEM No. 3

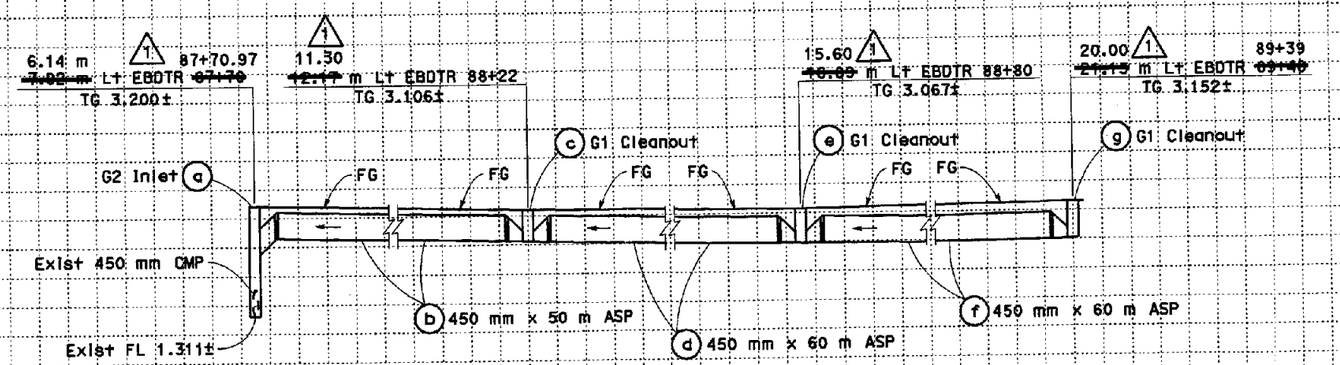

DRAINAGE SYSTEM No. 4

ALL DIMENSIONS ARE IN METERS UNLESS OTHERWISE SHOWN

DRAINAGE PROFILES

SCALE HORIZ 1:200 VERT 1:50

DP-4

STATE OF CALIFORNIA - DEPARTMENT OF TRANSPORTATION
Caltrans
TOLL BRIDGE

PROJECT ENGINEER J. E. GUTIERREZ

CALCULATED/DESIGNED BY | CHECKED BY | DATE | REVISED BY | DATE REVISED

Station | m³ Exc | Emb

FOR REDUCED PLANS ORIGINAL SCALE IS IN MILLIMETERS 0 20 40 60 80

USERNAME => s128632
DGN FILE => 40120llb004.cco

CU 04251 | EA 0120L1

LAST REVISION 07-20-06 | DATE PLOTTED => 25-SEP-2009 | TIME PLOTTED => 15:02

STATE OF CALIFORNIA - DEPARTMENT OF TRANSPORTATION

CONTRACT CHANGE ORDER

Change Requested by: Engineer

CCO 131	Suppl. No. 0	Contract No. 04 - 0120L4	Road ALA-80-1.6/2.7	FED. AID LOC.: NO FED AID

To: **M C M CONSTRUCTION INC**

You are directed to make the following changes from the plans and specifications or do the following described work not included in the plans and specifications for this contract. ***NOTE: This change order is not effective until approved by the Engineer.***

Description of work to be done, estimate of quantities and prices to be paid. (Segregate between additional work at contract price, agreed price and force account.) Unless otherwise stated, rates for rental of equipment cover only such time as equipment is actually used and no allowance will be made for idle time. This last percentage shown is the net accumulated increase or decrease from the original quantity in the Engineer's Estimate.

Eliminate NPS 4 Air Line (Bridge) at Pier E22R shown on sheet 360 of 643 and 361 of 643 of the contract plans.

Estimate of Decrease in Contract Item at Contract Price:

Item No. 83: NPS 4 AIR LINE (BRIDGE)

-15 M (–7.50%) $100.00 /M = –$1.500.00 (–7.50%)

Total credit for Decrease in Contract Item.....($1,500.00)

Estimated Cost: **Increase** ☐ **Decrease** ☑ **($1,500.00)**

By reason of this order the time of completion will be adjusted as follows: 0 days

Submitted by

Signature	Resident Engineer BEN GHAFGHAZI	Date 11/18/09

Approval Recommended by

Signature	Construction Engineer Ben Ghafghazi	Date 11/18/09

Engineer Approval by

Signature	Construction Engineer Ben Ghafghazi	Date 12/22/09

We the undersigned contractor, have given careful consideration to the change proposed and agree, if this proposal is approved, that we will provide all equipment, furnish the materials, except as may otherwise be noted above, and perform all services necessary for the work above specified, and will accept as full payment therefor the prices shown above.

NOTE: If you, the contractor, do not sign acceptance of this order, your attention is directed to the requirements of the specifications as to ceeding with the ordered work and filing a written protest within the time therein specified.

Contractor Acceptance by

Signature	(Print name and title) EDMUNDO A. PUCHI, TREASURER	Date 12/17/09

STATE OF CALIFORNIA - DEPARTMENT OF TRANSPORTATION

CONTRACT CHANGE ORDER MEMORANDUM

DATE: 11/17/2009 Page 1 of 1

TO: AMER BATA / BEN GHAFGHAZI

FROM: BEN GHAFGHAZI

FILE: E.A. 04 - 0120L4
CO-RTE-PM ALA-80-1.6/2.7
FED. NO. NO FED AID

CCO#: 131 | SUPPLEMENT#: 0 | Category Code: CLPK

CONTINGENCY BALANCE (incl. this change) $3,748,029.40

COST: ($1,500.00) INCREASE ☐ DECREASE ☑

HEADQUARTERS APPROVAL REQUIRED? ☐ YES ☑ NO

SUPPLEMENTAL FUNDS PROVIDED: $0.00

IS THIS REQUEST IN ACCORDANCE WITH ENVIRONMENTAL DOCUMENTS? ☑ YES ☐ NO

CCO DESCRIPTION:
Delete mechanical air line.

PROJECT DESCRIPTION:
Construct bridge, roadway, building and electrical system.

Original Contract Time:	Time Adj. This Change:	Previously Approved CCO Time Adjustments:	Percentage Time Adjusted: (including this change)	Total # of Unreconciled Deferred Time CCO(s): (including this change)
810 Day(s)	0 Day(s)	184 Day(s)	23 %	13

THIS CHANGE ORDER PROVIDES FOR:

Eliminating NPS 4 Air Line (Bridge) at Pier E22R shown on sheet 360 of 643 and 361 of 643 of the contract plans.

This change is necessary because the air line as shown on the plans is to be supported within a cell of the future Oakland Touchdown 2 structure. This work cannot take place until the Oakland Touchdown 2 structure is constructed. This work will be incorporated into contract 04-0120M4 for the Oakland Touchdown 2.

This work will be credited as a decrease in Item #83, "NPS 4 Air Line (Bridge)," for a total of $1,500.00, which will be returned to the contingency fund.

This change was requested by Jaime Gutierrez of Project Development (memo attached). This change has been discussed and concurred with Jack Wheeler of Mechanical Branch B. Maintenance concurrence is not necessary since this work will be incorporated into a future contract.

No adjustment of contract time is warranted since this change does not affect the controlling operation.

CONCURRED BY:

Construction Engineer:	Ben Ghafghazi	Date 11/18/09
Bridge Engineer:		Date
Project Engineer:	Jaime Gutierrez	Date 10/27/09
Project Manager:		Date
FHWA Rep.:		Date
Environmental:		Date
Other (specify):	Jack Wheeler, Mech. Branch B	Date 10/27/09
Other (specify):		Date
District Prior Approval By:		Date
HQ (Issue Approve) By:		Date
Resident Engineer's Signature:		Date 11/18/09

ESTIMATE OF COST

	THIS REQUEST	TOTAL TO DATE
ITEMS	($1,500.00)	($1,500.00)
FORCE ACCOUNT	$0.00	$0.00
AGREED PRICE	$0.00	$0.00
ADJUSTMENT	$0.00	$0.00
TOTAL	($1,500.00)	($1,500.00)

FEDERAL PARTICIPATION

☐ PARTICIPATING ☐ PARTICIPATING IN PART ☑ NONE
☐ NON-PARTICIPATING (MAINTENANCE) ☐ NON-PARTICIPATING

FEDERAL SEGREGATION (if more than one Funding Source or P.I.P. type)
☑ CCO FUNDED PER CONTRACT ☐ CCO FUNDED AS FOLLOWS

FEDERAL FUNDING SOURCE	PERCENT

ADA Notice: For individuals with sensory disabilities, this document is available in alternate formats. For information call: (916) 654-6410 or TDD (916) 654-3880 or write Records and Forms Management, 1120 N Street, MS-89, Sacramento, CA 95814.

STATE OF CALIFORNIA - DEPARTMENT OF TRANSPORTATION

CONTRACT CHANGE ORDER

Change Requested by: Engineer

CCO: 132	Suppl. No. 0	Contract No. 04 - 0120L4	Road ALA-80-1.6/2.7	FED. AID LOC.: NO FED AID

To: **M C M CONSTRUCTION INC**

You are directed to make the following changes from the plans and specifications or do the following described work not included in the plans and specifications for this contract. ***NOTE: This change order is not effective until approved by the Engineer.***

Description of work to be done, estimate of quantities and prices to be paid. (Segregate between additional work at contract price, agreed price and force account.) Unless otherwise stated, rates for rental of equipment cover only such time as equipment is actually used and no allowance will be made for idle time. This last percentage shown is the net accumulated increase or decrease from the original quantity in the Engineer's Estimate.

Extra Work at Lump Sum:

Perform the following 2 items of work pertaining to the service platform upper frames:

1) Dispose of previously fabricated service platform upper frames that developed cracks during galvanizing.

2) Provide for the fabrication of new service platform upper frames per revised plans on sheets 2 of 8 through 8 of 8 of this CCO. This work shall be in accordance with Section 10-1.71, "Service Platform," of the Special Provisions.

For this work, the contractor will be paid the agreed lump sum of $223,500.00. This sum constitutes full compensation, including markups, for this change.

Estimated cost of Extra Work at Lump Sum $223,500.00

Estimated Cost: Increase ☑ **Decrease** ☐ **$223,500.00**

By reason of this order the time of completion will be adjusted as follows: 0 days

Signature	**Resident Engineer** BEN GHAFGHAZI	**Date** 4/20/2010
Signature	**Construction Engineer** Ben Ghafghazi	**Date** 4/20/2010
Signature	**Construction Manager** Amer Bata	**Date** 5/13/10

We the undersigned contractor, have given careful consideration to the change proposed and agree, if this proposal is approved, that we will provide all equipment, furnish the materials, except as may otherwise be noted above, and perform all services necessary for the work above specified, and will accept as full payment therefor the prices shown above.

NOTE: If you, the contractor, do not sign acceptance of this order, your attention is directed to the requirements of the specifications as to proceeding with the ordered work and filing a written protest within the time therein specified.

Signature	**(Print name and title)** EDMUNDO A. PUCHI, TREASURER	**Date** 5/7/10

STATE OF CALIFORNIA - DEPARTMENT OF TRANSPORTATION

CONTRACT CHANGE ORDER MEMORANDUM

AMER BATA / BEN GHAFGHAZI

FROM: BEN GHAFGHAZI

FILE: **E.A.** 04 - 0120L4
CO-RTE-PM ALA-80-1.6/2.7
FED. NO. NO FED AID

CCO#: **132** | SUPPLEMENT#: **0** | Category Code: **CXPX**

CONTINGENCY BALANCE (incl. this change) **$3,089,158.40**

COST: **$223,500.00** INCREASE ☑ DECREASE ☐

HEADQUARTERS APPROVAL REQUIRED? ☑ YES ☐ NO

SUPPLEMENTAL FUNDS PROVIDED: **$0.00**

IS THIS REQUEST IN ACCORDANCE WITH ENVIRONMENTAL DOCUMENTS? ☑ YES ☐ NO

CCO DESCRIPTION:
Service platform modifications.

PROJECT DESCRIPTION:
Construct bridge, roadway, building and electrical system.

Original Contract Time:	Time Adj. This Change:	Previously Approved CCO Time Adjustments:	Percentage Time Adjusted: (including this change)	Total # of Unreconciled Deferred Time CCO(s): (including this change)
810 Day(s)	**0** Day(s)	**184** Day(s)	**23** %	**13**

THIS CHANGE ORDER PROVIDES FOR:

Fabrication of new service platform upper frames per revised plans on sheets 2 of 8 through 8 of 8 of the CCO. Disposal of previously fabricated service platform upper frames that developed cracks during galvanizing.

This change is necessary to replace service platform upper frames that were damaged during galvanizing. The service platforms were inspected and accepted by METS prior to galvanizing. The upper frames developed cracks during the galvanizing process and were rejected by the Department. A review of the repair procedure was conducted by Construction, Design, and METS it was concluded that the damage could not be suitably repaired to restore structural integrity.

An internal design review of the service platforms determined that the cracks which developed after galvanizing were mainly at the copes where two members are welded together. Service platforms on the Skyway contract (04-012024) developed similar cracks after galvanizing and design modifications were adopted to address the cracking issue. A literature review also indicated that the possibility of cracks developing in a structure during galvanizing exists with similar type of design configuration.

Based on this design review, Project Development has issued revised plan sheets incorporating design changes that will reduce the possibility of developing cracks while galvanizing. The revisions also provide for modifications to the platform to facilitate handling during the galvanizing process that may contribute to the cracks developing.

This change order provides for the design revisions and compensates the contractor for fabricating the new service platform upper frames. Compensation is also provided for the cost of disposing of the rejected platforms.

This work will be paid as Extra Work at Agreed Lump Sum of $223,500.00, which can be financed from the contingency fund. This sum constitutes full compensation, including markups, for this change. A detailed cost analysis is on file in the Resident Engineer's office.

This change has been discussed and concurred with Jaime Gutierrez of Project Development, Hasan El-Natur of Structures Design.

No adjustment of contract time is warranted since this change does not affect the controlling operation.

ADA Notice: For individuals with sensory disabilities, this document is available in alternate formats. For information call: (916) 654-6410 or TDD (916) 654-3880 or write Records and Forms Management, 1120 N Street, MS-89, Sacramento, CA 95814.

CONCURRED BY:		
Construction Engineer:	Ben Ghafghazi	Date 4/20/2010
Bridge Engineer:	Mehran Ardakanian	Date 12/8/09
Project Engineer:	Jaime Gutierrez	Date 11/24/09
Project Manager:		Date
FHWA Rep.:		Date
Environmental:		Date
Other (specify):	Hasan El-Natur, Structures Design	Date 11/24/09
Other (specify):		Date
District Prior Approval By:		Date
HQ (Issue Approve) By:	Larry Salhaney	Date 4/22/10
Resident Engineer's Signature:		Date 4/20/2010

ESTIMATE OF COST

	THIS REQUEST	TOTAL TO DATE
ITEMS	$0.00	$0.00
FORCE ACCOUNT	$0.00	$0.00
AGREED PRICE	$223,500.00	$223,500.00
ADJUSTMENT	$0.00	$0.00
TOTAL	$223,500.00	$223,500.00

FEDERAL PARTICIPATION

☐ PARTICIPATING ☐ PARTICIPATING IN PART ☑ NONE
☐ NON-PARTICIPATING (MAINTENANCE) ☐ NON-PARTICIPATING

FEDERAL SEGREGATION (if more than one Funding Source or P.I.P. type)
☑ CCO FUNDED PER CONTRACT ☐ CCO FUNDED AS FOLLOWS

FEDERAL FUNDING SOURCE	PERCENT

ADA Notice: For individuals with sensory disabilities, this document is available in alternate formats. For information call: (916) 654-6410 or TDD (916) 654-3880 or write Records and Forms Management, 1120 N Street, MS-89, Sacramento, CA 95814.

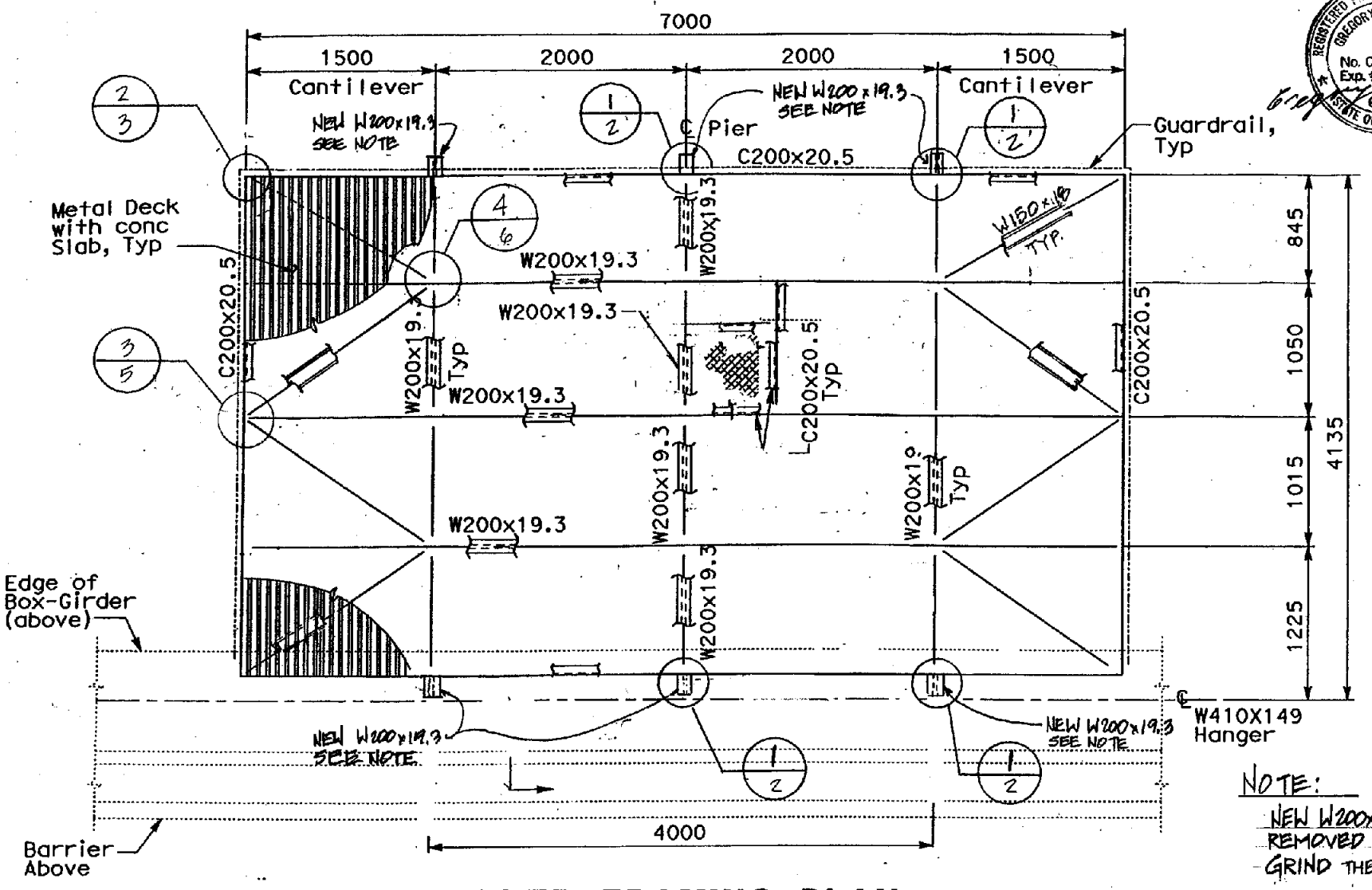

REGISTERED PROFESSIONAL ENGINEER GREGORY BEMKOVICH No. C 040518 Exp. 3/31/2011 CIVIL STATE OF CALIFORNIA

10/6/2009

Contract No. 04-012014
Page 2 of 8
CCO No. 132 Suppl. No.
Contractor MCM
Res. Engr. B Ghafghazi

NOTE:
NEW W200x19.3 SHALL BE REMOVED AFTER GALVANIZING, GRIND THE WELD SMOOTH.

UPPER FRAMING PLAN

Sheet NO. 1 OF 7

Contract No. 04-012014
Page 3 of 8
CCO No. 132 Suppl. No.
Contractor MCM
Res. Engr. B. Ghafghazi

REGISTERED PROFESSIONAL ENGINEER GREGORY BENKOVICH No. C 040518 Exp. 3/31/2011 CIVIL STATE OF CALIFORNIA

10/28/2009

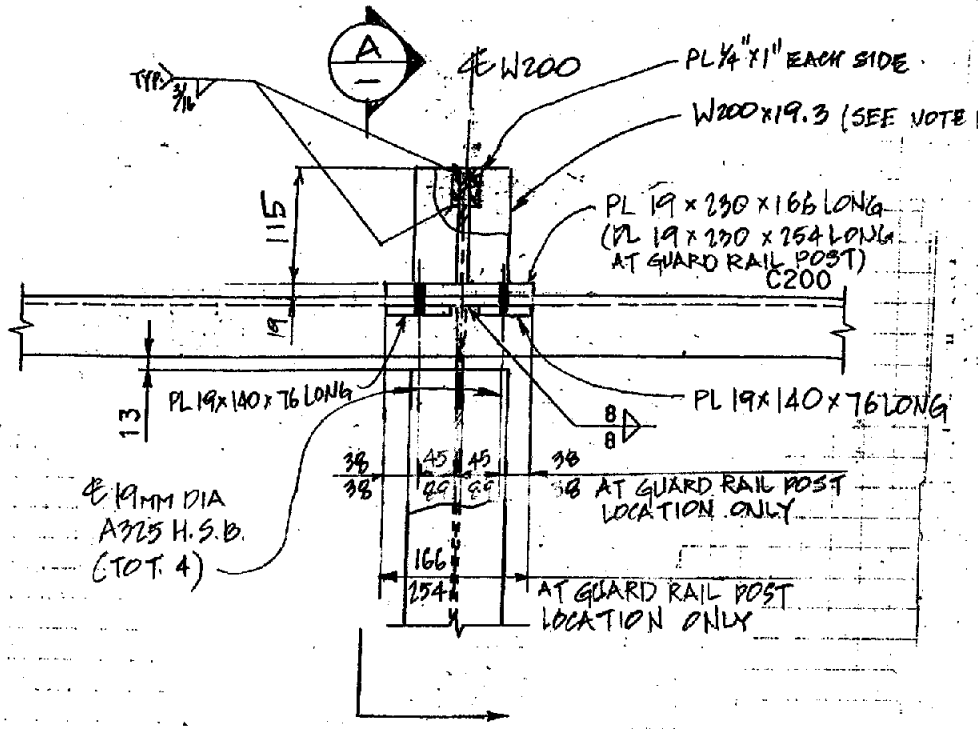

UPPER FRAMING

1/1 DETAIL

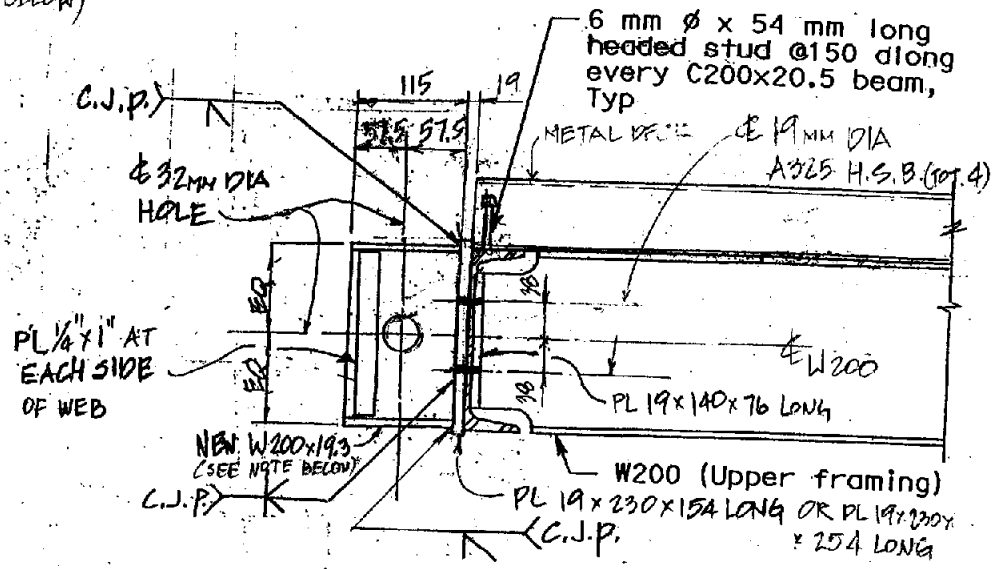

NOTE

REMOVE AFTER GALVANIZING. PLUG AND SEAL HOLES IN C200. COMPLETE GALVANIZATION AT PICK-UP POINT LOCATIONS.

A/— SECTION

Sheet No. 2 of 7

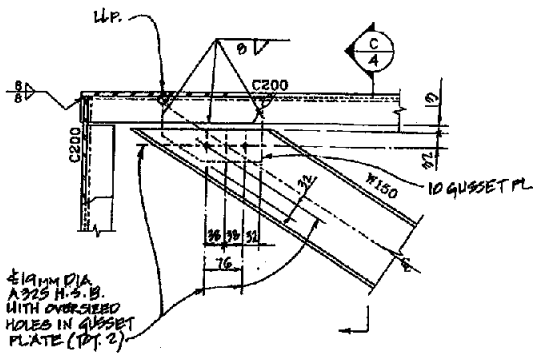

2/1 DETAIL

SHEET 3 OF 7

REGISTERED PROFESSIONAL ENGINEER
GREGORY BENKOVICH
No. C 040518
Exp. 3/31/2011
CIVIL
STATE OF CALIFORNIA

Gregory Benkovich

10/6/2009

Contract No. 04-0120L4

Page 4 of 8

CCO No. 132 Suppl. No.

Contractor MCM

Res. Engr. B. Ghafghazi

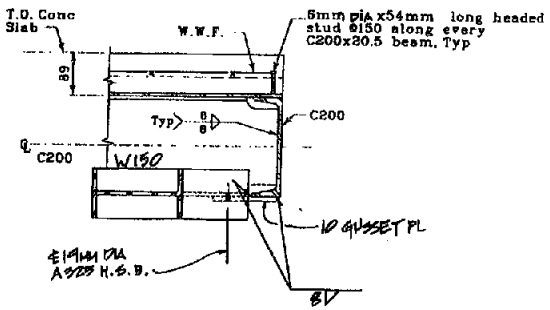

(C/3) SECTION

SHEET 4 OF 7

REGISTERED PROFESSIONAL ENGINEER
GREGORY BERKOVICH
No. C 040518
Exp. 3/31/2011
CIVIL
STATE OF CALIFORNIA

Gregory Berkovich

10/6/2009

Contract No. 04-0120L4

Page 5 of 8

CCO No. 132 Suppl. No. _____

Contractor MCM

Res. Engr. B. Ghafghazi

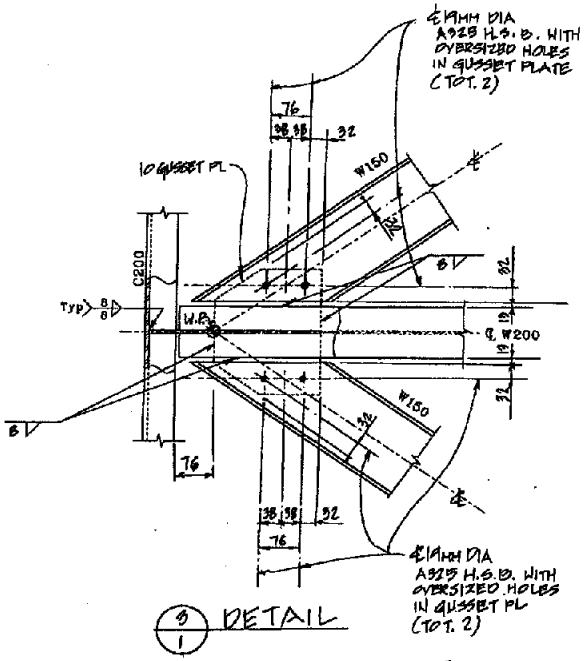

9/1 DETAIL

SHEET 5 OF 7

REGISTERED PROFESSIONAL ENGINEER
GREGORY BENKOVICH
No. C 040518
Exp. 9/31/2011
CIVIL
STATE OF CALIFORNIA

Gregory Benkovich

10/6/2009

Contract No. 04-0120L4

Page 6 of 8

CCO No. 132 Suppl. No.

Contractor MCM

Res. Engr. B. Ghafghazi

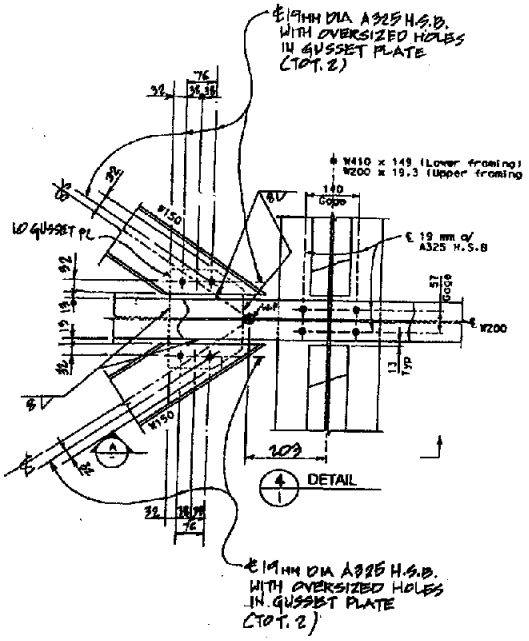

SHEET 6 OF 7

10/6/2009

Contract No. 04-0120L4

Page 7 of 8

CCO No. 132 Suppl. No.

Contractor McM

Res. Engr. B. Ghafghazi

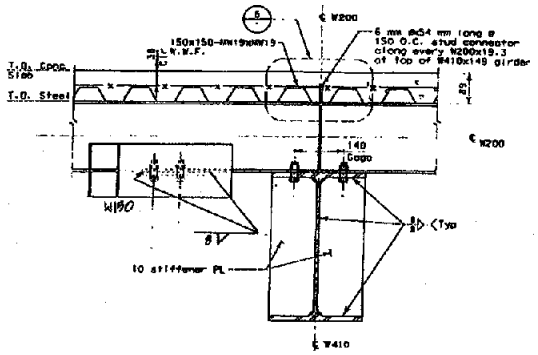

A/6 SECTION

SHEET 7 OF 7

REGISTERED PROFESSIONAL ENGINEER
GREGORY BENKOVICH
No. C 040518
Exp. 3/31/2011
CIVIL
STATE OF CALIFORNIA

Greg Benkovich

10/6/2009

Contract No. 04-012014

Page 8 of 8

CCO No. 132 Suppl. No. _____

Contractor MCM

Res. Engr. B. Ghafghazi

STATE OF CALIFORNIA - DEPARTMENT OF TRANSPORTATION

CONTRACT CHANGE ORDER

Change Requested by: Engineer

CCO: 133	Suppl. No. 0	Contract No. 04 - 0120L4	Road ALA-80-1.6/2.7	FED. AID LOC.: NO FED AID

To: **M C M CONSTRUCTION INC**

You are directed to make the following changes from the plans and specifications or do the following described work not included in the plans and specifications for this contract. ***NOTE: This change order is not effective until approved by the Engineer.***

Description of work to be done, estimate of quantities and prices to be paid. (Segregate between additional work at contract price, agreed price and force account.) Unless otherwise stated, rates for rental of equipment cover only such time as equipment is actually used and no allowance will be made for idle time. This last percentage shown is the net accumulated increase or decrease from the original quantity in the Engineer's Estimate.

Extra Work at Lump Sum:

Where directed by the Engineer, furnish and install two Base test cameras on the demonstration poles on Skyway. Also, furnish and install antennas and 2.4 GHz radios to establish a radio link from the demonstration poles to the Base radio tower at Burma Road maintenance yard. Exact location for this work will be determined in the field by the Engineer.

Estimated cost of Extra Work at Lump Sum $18,510.92

Estimated Cost: **Increase** ☑ **Decrease** ☐ **$18,510.92**

By reason of this order the time of completion will be adjusted as follows: 0 days

Signature	**Resident Engineer** BEN GHAFGHAZI	**Date** 2/5/2010
Signature	**Construction Engineer** Ben Ghafghazi	**Date** 2/5/2010
Signature	**Construction Engineer** Ben Ghafghazi	**Date** 2/16/2010

We the undersigned contractor, have given careful consideration to the change proposed and agree, if this proposal is approved, that we will provide all equipment, furnish the materials, except as may otherwise be noted above, and perform all services necessary for the work above specified, and will accept as full payment therefor the prices shown above.

NOTE: If you, the contractor, do not sign acceptance of this order, your attention is directed to the requirements of the specifications as to proceeding with the ordered work and filing a written protest within the time therein specified.

Signature	**(Print name and title)** EDMUNDO A. PUCHI, TREASURER	**Date** 2/11/10

STATE OF CALIFORNIA - DEPARTMENT OF TRANSPORTATION

CONTRACT CHANGE ORDER MEMORANDUM

TO: AMER BATA / BEN GHAFGHAZI

FROM: BEN GHAFGHAZI

FILE: **E.A.** 04 - 0120L4
CO-RTE-PM ALA-80-1.6/2.7
FED. NO. NO FED AID

CCO#: 133	SUPPLEMENT#: 0	Category Code: **CBXX**	CONTINGENCY BALANCE (incl. this change) **$3,165,176.40**

COST: **$18,510.92** INCREASE ☑ DECREASE ☐

HEADQUARTERS APPROVAL REQUIRED? ☐ YES ☑ NO

SUPPLEMENTAL FUNDS PROVIDED: **$0.00**

IS THIS REQUEST IN ACCORDANCE WITH ENVIRONMENTAL DOCUMENTS? ☑ YES ☐ NO

CCO DESCRIPTION:
Base demo camera.

PROJECT DESCRIPTION:
Construct bridge, roadway, building and electrical system.

Original Contract Time:	Time Adj. This Change:	Previously Approved CCO Time Adjustments:	Percentage Time Adjusted: (including this change)	Total # of Unreconciled Deferred Time CCO(s): (including this change)
810 Day(s)	0 Day(s)	0 Day(s)	0 %	0

THIS CHANGE ORDER PROVIDES FOR:
Compensating the contractor for furnishing and installing two Base test cameras, 2.4 GHz radios and antennas on the demonstration poles on Skyway.

This change was requested by Maintenance Engineering Support. This change is necessary to determine the optimal mounting location for the cameras that will be installed in the future. Video and communication qualities of the cameras and their appurtenances will be tested at this temporary location. Exact location for this work will be determined in the field by the Engineer.

For this change order, the total payment for the Extra Work will be a Lump Sum of $18,510.92, which can be financed from the contingency fund. A detailed cost analysis has been prepared by the contractor, which is verified as reasonable by the Engineer, is on file at the Resident Engineer's office.

Maintenance concurrence is not required since this is temporary work.

No adjustment of contract time is warranted since this change does not affect the controlling operation.

CONCURRED BY:

Construction Engineer:	Ben Ghafghazi	Date 2/3/2010
Bridge Engineer:		Date
Project Engineer:		Date
Project Manager:		Date
FHWA Rep.:		Date
Environmental:		Date
Other (specify):	Ben Edalati, Maint. Engr. Support	Date 1/27/10
Other (specify):		Date
District Prior Approval By:		Date
HQ (Issue Approve) By:		Date
Resident Engineer's Signature:		Date 2/3/2010

ESTIMATE OF COST

	THIS REQUEST	TOTAL TO DATE
ITEMS	$0.00	$0.00
FORCE ACCOUNT	$0.00	$0.00
AGREED PRICE	$18,510.92	$18,510.92
ADJUSTMENT	$0.00	$0.00
TOTAL	$18,510.92	$18,510.92

FEDERAL PARTICIPATION

☐ PARTICIPATING ☐ PARTICIPATING IN PART ☑ NONE
☐ NON-PARTICIPATING (MAINTENANCE) ☐ NON-PARTICIPATING

FEDERAL SEGREGATION (if more than one Funding Source or P.I.P. type)
☑ CCO FUNDED PER CONTRACT ☐ CCO FUNDED AS FOLLOWS

FEDERAL FUNDING SOURCE	PERCENT

ADA Notice: For individuals with sensory disabilities, this document is available in alternate formats. For information call: (916) 654-6410 or TDD (916) 654-3880 or write Records and Forms Management, 1120 N Street, MS-89, Sacramento, CA 95814.

STATE OF CALIFORNIA - DEPARTMENT OF TRANSPORTATION

CONTRACT CHANGE ORDER

Change Requested by: Engineer

CCO: 134	Suppl. No. 0	Contract No. 04 - 0120L4	Road ALA-80-1.6/2.7	FED. AID LOC.: NO FED AID

To: **M C M CONSTRUCTION INC**

You are directed to make the following changes from the plans and specifications or do the following described work not included in the plans and specifications for this contract. ***NOTE: This change order is not effective until approved by the Engineer.***

Description of work to be done, estimate of quantities and prices to be paid. (Segregate between additional work at contract price, agreed price and force account.) Unless otherwise stated, rates for rental of equipment cover only such time as equipment is actually used and no allowance will be made for idle time. This last percentage shown is the net accumulated increase or decrease from the original quantity in the Engineer's Estimate.

Extra Work at Unit Price:

Furnish manhole system on all existing manholes (102 ea.) on the Oakland Touchdown and Skyway structures, as directed by the Engineer. Padlocks will be State furnished.

For this work, the contractor will be paid $800.00 per unit of manhole security system. This price constitutes full compensation, including all markups, for the work of this change.

Estimated cost of Extra Work at Agreed Unit Price $81,600.00

Estimated Cost: Increase ☑ Decrease ☐ **$81,600.00**

By reason of this order the time of completion will be adjusted as follows: 0 days

Submitted by

Signature	Resident Engineer BEN GHAFGHAZI	Date 8/23/2010

Approval Recommended by

Signature	Construction Engineer Ben Ghafghazi	Date 8/23/2010

Engineer Approval by

Signature	Construction Manager Amer Bata	Date 8/23/10

We the undersigned contractor, have given careful consideration to the change proposed and agree, if this proposal is approved, that we will provide all equipn furnish the materials, except as may otherwise be noted above, and perform all services necessary for the work above specified, and will accept as full paymer therefor the prices shown above.

NOTE: If you, the contractor, do not sign acceptance of this order, your attention is directed to the requirements of the specifications as to proceeding with the ordered work and filing a written protest within the time therein specified.

Contractor Acceptance by

Signature	(Print name and title) EDMUNDO A. PUCHI, TREASURER	Date 8/24/10

STATE OF CALIFORNIA - DEPARTMENT OF TRANSPORTATION

CONTRACT CHANGE ORDER MEMORANDUM

DATE: 12/7/2009 Page 1 of 1

TO: AMER BATA / BEN GHAFGHAZI	FILE: E.A. 04 - 0120L4
FROM: BEN GHAFGHAZI	CO-RTE-PM ALA-80-1.6/2.7
	FED. NO. NO FED AID
CCO#: 134 SUPPLEMENT#: 0 Category Code: CLPV	CONTINGENCY BALANCE (incl. this change): $2,172,973.40
COST: $81,600.00 INCREASE ☑ DECREASE ☐	HEADQUARTERS APPROVAL REQUIRED? ☐ YES ☑ NO
SUPPLEMENTAL FUNDS PROVIDED: $0.00	IS THIS REQUEST IN ACCORDANCE WITH ENVIRONMENTAL DOCUMENTS? ☑ YES ☐ NO
CCO DESCRIPTION: Manhole security	**PROJECT DESCRIPTION:** Construct bridge, roadway, building and electrical system.

Original Contract Time:	Time Adj. This Change:	Previously Approved CCO Time Adjustments:	Percentage Time Adjusted: (including this change)	Total # of Unreconciled Deferred Time CCO(s): (including this change)
810 Day(s)	0 Day(s)	184 Day(s)	23 %	15

THIS CHANGE ORDER PROVIDES FOR:

Payment to the contractor for furnishing and installing a pan-type manhole security system for all manholes on the Eastbound and Westbound of Oakland Touchdown structures, and furnishing and delivering to site the same security system for the Skyway structures.

On April 1, 2009, personnel from CHP did a security walkthrough on the SFOBB and requested this extra work to be done to prevent easy public access to the interior of the bridge. At the walkthrough, manholes were found to provide access to vulnerable points throughout the bridge. Maintenance was also present and concurs with this change.

Payment for the Extra Work will be @unit price for an estimated total [redacted] of $81,600.00 which can be financed from the contingency fund. A detailed cost analysis was submitted by the contractor, and has been verified as reasonable by the Engineer.

No adjustment of contract time is warranted as this change does not affect the controlling operation.

CONCURRED BY:		
Construction Engineer:	Ben Ghafghazi	Date 8/23/2010
Bridge Engineer:		Date
Project Engineer:		Date
Project Manager:		Date
FHWA Rep.:		Date
Environmental:		Date
Other (specify):		Date
Other (specify):		Date
District Prior Approval By:		Date
HQ (Issue Approve) By:		Date
Resident Engineer's Signature:		Date 8/23/2010

ESTIMATE OF COST

	THIS REQUEST	TOTAL TO DATE
ITEMS	$0.00	$0.00
FORCE ACCOUNT	$0.00	$0.00
AGREED PRICE	$81,600.00	$81,600.00
ADJUSTMENT	$0.00	$0.00
TOTAL	$81,600.00	$81,600.00

FEDERAL PARTICIPATION

☐ PARTICIPATING ☐ PARTICIPATING IN PART ☑ NONE
☐ NON-PARTICIPATING (MAINTENANCE) ☐ NON-PARTICIPATING

FEDERAL SEGREGATION (if more than one Funding Source or P.I.P. type)
☑ CCO FUNDED PER CONTRACT ☐ CCO FUNDED AS FOLLOWS

FEDERAL FUNDING SOURCE	PERCENT

ADA Notice: For individuals with sensory disabilities, this document is available in alternate formats. For information call: (916) 654-6410 or TDD (916) 654-3880 or write Records and Forms Management, 1120 N Street, MS-89, Sacramento, CA 95814.

STATE OF CALIFORNIA - DEPARTMENT OF TRANSPORTATION

CONTRACT CHANGE ORDER

Change Requested by: Engineer

CCO 135	Suppl. No. 0	Contract No. 04 - 0120L4	Road ALA-80-1.6/2.7	FED. AID LOC.: NO FED AID

To: **M C M CONSTRUCTION INC**

You are directed to make the following changes from the plans and specifications or do the following described work not included in the plans and specifications for this contract. ***NOTE: This change order is not effective until approved by the Engineer.***

Description of work to be done, estimate of quantities and prices to be paid. (Segregate between additional work at contract price, agreed price and force account.) Unless otherwise stated, rates for rental of equipment cover only such time as equipment is actually used and no allowance will be made for idle time. This last percentage shown is the net accumulated increase or decrease from the original quantity in the Engineer's Estimate.

Extra Work at Force Account:

Extend 4 NPS compressed air pipe and 2 NPS drain pipe shown on AM-3, Sheet 632 of 643, approximately 11 M west. Terminate outside limit of Mole Substation parking lot. Exact limits will be laid out in the field. All work shall be performed in accordance with Section 12-15, "Mechanical," of the Special Provisions.

Estimated cost of Extra Work at Force Account $6,000.00

Estimated Cost: Increase ☑ **Decrease** ☐ **$6,000.00**

By reason of this order the time of completion will be adjusted as follows: 0 days

Signature	**Resident Engineer** BEN GHAFGHAZI	**Date** 12/7/09
Signature	**Construction Engineer** Ben Ghafghazi	**Date** 12/7/09
Signature	**Construction Engineer** Ben Ghafghazi	**Date** 12/22/09

We the undersigned contractor, have given careful consideration to the change proposed and agree, if this proposal is approved, that we will provide all equipment, furnish the materials, except as may otherwise be noted above, and perform all services necessary for the work above specified, and will accept as full payment therefor the prices shown above.

NOTE: If you, the contractor, do not sign acceptance of this order, your attention is directed to the requirements of the specifications as to proceeding with the ordered work and filing a written protest within the time therein specified.

Signature	**(Print name and title)** EDMUNDO A. PUCHI, TREASURER	**Date** 12/17/09

STATE OF CALIFORNIA - DEPARTMENT OF TRANSPORTATION

CONTRACT CHANGE ORDER MEMORANDUM

DATE: 12/7/2009 Page 1 of 1

TO: AMER BATA / BEN GHAFGHAZI

FROM: BEN GHAFGHAZI

FILE: **E.A.** 04 - 0120L4
CO-RTE-PM ALA-80-1.6/2.7
FED. NO. NO FED AID

CCO#: **135** SUPPLEMENT#: **0** Category Code: **CAPX**

CONTINGENCY BALANCE (incl. this change) **$3,312,744.40**

COST: **$6,000.00** INCREASE ☑ DECREASE ☐

HEADQUARTERS APPROVAL REQUIRED? ☐ YES ☑ NO

SUPPLEMENTAL FUNDS PROVIDED: **$0.00**

IS THIS REQUEST IN ACCORDANCE WITH ENVIRONMENTAL DOCUMENTS? ☑ YES ☐ NO

CCO DESCRIPTION:
Extend air and drain pipes at Mole SS.

PROJECT DESCRIPTION:
Construct bridge, roadway, building and electrical system.

Original Contract Time:	Time Adj. This Change:	Previously Approved CCO Time Adjustments:	Percentage Time Adjusted: (including this change)	Total # of Unreconciled Deferred Time CCO(s): (including this change)
810 Day(s)	0 Day(s)	184 Day(s)	23 %	13

THIS CHANGE ORDER PROVIDES FOR:
Extending 4 NPS compressed air pipe and 2 NPS drain pipe shown on AM-3, Sheet 632 of 643, approximately 11 M west and Terminating outside limit of Mole Substation parking lot.

This change is necessary to provide access to the pipes for future connections. The plans show the air pipe being terminated within the parking lot. The drain pipe is shown to run to a French drain. There is no French drain in the plans. The pipes will be extended beyond the parking lot and terminated where they will be accessible in the future.

This work will be paid as Extra Work at Force Account for $6,000.00, which can be financed from the contingency fund.

This change has been discussed and concurred with Jaime Gutierrez of Project Development.

No adjustment of contract time is warranted since this change does not affect the controlling operation.

CONCURRED BY:

Construction Engineer:	Ben Ghafghazi	Date 12/7/09
Bridge Engineer:		Date
Project Engineer:	Jaime Gutierrez	Date 12/7/09
Project Manager:		Date
FHWA Rep.:		Date
Environmental:		Date
Other (specify):		Date
Other (specify):		Date
District Prior Approval By:		Date
HQ (Issue Approve) By:		Date
Resident Engineer's Signature:		Date 12/7/09

ESTIMATE OF COST

	THIS REQUEST	TOTAL TO DATE
ITEMS	$0.00	$0.00
FORCE ACCOUNT	$6,000.00	$6,000.00
AGREED PRICE	$0.00	$0.00
ADJUSTMENT	$0.00	$0.00
TOTAL	$6,000.00	$6,000.00

FEDERAL PARTICIPATION

☐ PARTICIPATING ☐ PARTICIPATING IN PART ☑ NONE
☐ NON-PARTICIPATING (MAINTENANCE) ☐ NON-PARTICIPATING

FEDERAL SEGREGATION (if more than one Funding Source or P.I.P. type)
☑ CCO FUNDED PER CONTRACT ☐ CCO FUNDED AS FOLLOWS

FEDERAL FUNDING SOURCE	PERCENT

ADA Notice: For individuals with sensory disabilities, this document is available in alternate formats. For information call: (916) 654-6410 or TDD (916) 654-3880 or write Records and Forms Management, 1120 N Street, MS-89, Sacramento, CA 95814.

STATE OF CALIFORNIA - DEPARTMENT OF TRANSPORTATION

CONTRACT CHANGE ORDER

Change Requested by: Engineer

CCO 136	Suppl. No. 0	Contract No. 04 - 0120L4	Road ALA-80-1.6/2.7	FED. AID LOC.: NO FED AID

To: **M C M CONSTRUCTION INC**

You are directed to make the following changes from the plans and specifications or do the following described work not included in the plans and specifications for this contract. ***NOTE: This change order is not effective until approved by the Engineer.***

Description of work to be done, estimate of quantities and prices to be paid. (Segregate between additional work at contract price, agreed price and force account.) Unless otherwise stated, rates for rental of equipment cover only such time as equipment is actually used and no allowance will be made for idle time. This last percentage shown is the net accumulated increase or decrease from the original quantity in the Engineer's Estimate.

Extra Work at Lump Sum:

Compensate Contractor for mobilizing and subsequently canceling oil boom installation operation ordered on October 30, 2009. For this work, the contractor will be paid the sum of $4,513.74. This sum constitutes full compensation, including markups, for this change.

Estimated cost of Extra Work at Lump Sum $4,513.74

Estimated Cost: Increase ☑ **Decrease** ☐ **$4,513.74**

By reason of this order the time of completion will be adjusted as follows: 0 days

Signature	**Resident Engineer** BEN GHAFGHAZI	**Date** 12/7/09
Signature	**Construction Engineer** Ben Ghafghazi	**Date** 12/7/09
Signature	**Construction Engineer** Ben Ghafghazi	**Date** 12/22/09

We the undersigned contractor, have given careful consideration to the change proposed and agree, if this proposal is approved, that we will provide all equipment, furnish the materials, except as may otherwise be noted above, and perform all services necessary for the work above specified, and will accept as full payment therefor the prices shown above.

NOTE: If you, the contractor, do not sign acceptance of this order, your attention is directed to the requirements of the specifications as to proceeding with the ordered work and filing a written protest within the time therein specified.

Signature	**(Print name and title)** EDMUNDO A. PUCHI, TREASURER	**Date** 12/17/09

STATE OF CALIFORNIA - DEPARTMENT OF TRANSPORTATION

CONTRACT CHANGE ORDER MEMORANDUM

DATE: 12/7/2009 Page 1 of 1

TO: AMER BATA / BEN GHAFGHAZI

FROM: BEN GHAFGHAZI

FILE: E.A. 04 - 0120L4
CO-RTE-PM ALA-80-1.6/2.7
FED. NO. NO FED AID

CCO#: 136 SUPPLEMENT#: 0 Category Code: CXXX

CONTINGENCY BALANCE (incl. this change) $3,308,230.40

COST: $4,513.74 INCREASE ☑ DECREASE ☐

HEADQUARTERS APPROVAL REQUIRED? ☐ YES ☑ NO

SUPPLEMENTAL FUNDS PROVIDED: $0.00

IS THIS REQUEST IN ACCORDANCE WITH ENVIRONMENTAL DOCUMENTS? ☑ YES ☐ NO

CCO DESCRIPTION:
Dixon Marine mobilization costs.

PROJECT DESCRIPTION:
Construct bridge, roadway, building and electrical system.

Original Contract Time:	Time Adj. This Change:	Previously Approved CCO Time Adjustments:	Percentage Time Adjusted: (Including this change)	Total # of Unreconciled Deferred Time CCO(s): (including this change)
810 Day(s)	0 Day(s)	184 Day(s)	23 %	13

THIS CHANGE ORDER PROVIDES FOR:

Mobilization costs for Dixon Marine to provide and install oil containment booms in San Francisco Bay from Emeryville Crescent to the foot of the Bay Bridge. The work was cancelled after the contractor had mobilized.

This change is necessary because Dixon Marine was ordered to provide services to protect the Bay shore from oil contamination caused by an oil spill from the Dubai Star tanker ship. The spill occurred on October 30, 2009. Work was cancelled after the Contractor had mobilized. Cancellation was due to safety concerns of working at night on rough water. This CCO will pay for the mobilization costs.

This work will be paid as Extra Work at Agreed Lump Sum of $4,513.74, which can be financed from the contingency fund. This sum constitutes full compensation, including markups, for this change. A detailed cost analysis is on file in the Resident Engineer's office.

Design and Maintenance concurrence is not necessary since this work is temporary.

CONCURRED BY:

Construction Engineer:	Ben Ghafghazi	Date 12/7/09
Bridge Engineer:		Date
Project Engineer:		Date
Project Manager:		Date
FHWA Rep.:		Date
Environmental:		Date
Other (specify):		Date
Other (specify):		Date
District Prior Approval By:		Date
HQ (Issue Approve) By:		Date
Resident Engineer's Signature:		Date 12/7/09

ESTIMATE OF COST

	THIS REQUEST	TOTAL TO DATE
ITEMS	$0.00	$0.00
FORCE ACCOUNT	$0.00	$0.00
AGREED PRICE	$4,513.74	$4,513.74
ADJUSTMENT	$0.00	$0.00
TOTAL	$4,513.74	$4,513.74

FEDERAL PARTICIPATION

☐ PARTICIPATING ☐ PARTICIPATING IN PART ☑ NONE
☐ NON-PARTICIPATING (MAINTENANCE) ☐ NON-PARTICIPATING

FEDERAL SEGREGATION (if more than one Funding Source or P.I.P. type)
☑ CCO FUNDED PER CONTRACT ☐ CCO FUNDED AS FOLLOWS

FEDERAL FUNDING SOURCE PERCENT

ADA Notice: For individuals with sensory disabilities, this document is available in alternate formats. For information call: (916) 654-6410 or TDD (916) 654-3880 or write Records and Forms Management, 1120 N Street, MS-89, Sacramento, CA 95814.

STATE OF CALIFORNIA - DEPARTMENT OF TRANSPORTATION

CONTRACT CHANGE ORDER

Change Requested by: Engineer

CCO: 137	Suppl. No. 0	Contract No. 04 - 0120L4	Road ALA-80-1.6/2.7	FED. AID LOC.: NO FED AID

TO: **M C M CONSTRUCTION INC**

You are directed to make the following changes from the plans and specifications or do the following described work not included in the plans and specifications for this contract. ***NOTE: This change order is not effective until approved by the Engineer.***

Description of work to be done, estimate of quantities and prices to be paid. (Segregate between additional work at contract price, agreed price and force account.) Unless otherwise stated, rates for rental of equipment cover only such time as equipment is actually used and no allowance will be made for idle time. This last percentage shown is the net accumulated increase or decrease from the original quantity in the Engineer's Estimate.

Extra Work at Lump Sum:

Provide labor, equipment, and material to furnish and apply methacrylate deck treatment to entire deck on Frame 1 of Bridge No. 34-0006R and at the approach slab at Abutment 23L of Bridge No. 34-0005L. Contractor shall be compensated only for methacrylate placed beyond the limits specified in Section 10-1.53, "Concrete Structures, Deck Crack Treatment" of the Special Provisions. All work shall be in accordance with Section 10-1.53, "Concrete Structures" of the Special Provisions.

The Contractor shall be compensated an agreed lump sum of $33,942.54 for the aforementioned work. This sum constitutes full compensation, including all applicable markups, for the work of this change.

Estimated cost of Extra Work at Lump Sum $33,942.54

Estimated Cost: **Increase** ☑ **Decrease** ☐ **$33,942.54**

By reason of this order the time of completion will be adjusted as follows: 0 days

Signature	~~Resident Engineer~~ Ben Ghafghazi	**Date** 2/25/2010
Signature	~~Construction Engineer~~ Ben Ghafghazi	**Date** 2/25/2010
Signature	**Construction ~~Engineer~~** Manager ~~Ben Ghafghazi~~ Amer Bata	**Date** 5/13/10

We the undersigned contractor, have given careful consideration to the change proposed and agree, if this proposal is approved, that we will provide all equipment, furnish the materials, except as may otherwise be noted above, and perform all services necessary for the work above specified, and will accept as full payment therefor the prices shown above.

NOTE: If you, the contractor, do not sign acceptance of this order, your attention is directed to the requirements of the specifications as to proceeding with the ordered work and filing a written protest within the time therein specified.

Signature	**(Print name and title)** EMUNDO A. PUCHI, TREASURER	**Date** 5/7/10

STATE OF CALIFORNIA - DEPARTMENT OF TRANSPORTATION

CONTRACT CHANGE ORDER MEMORANDUM

TO: AMER BATA / BEN GHAFGHAZI

FROM: BEN GHAFGHAZI

FILE: **E.A.** 04 - 0120L4
CO-RTE-PM ALA-80-1.6/2.7
FED. NO. NO FED AID

CCO#: **137** SUPPLEMENT#: **0** Category Code: **CHSA**

CONTINGENCY BALANCE (incl. this change) **$3,157,658.40**

COST: **$33,942.54** INCREASE ☑ DECREASE ☐

HEADQUARTERS APPROVAL REQUIRED? ☐ YES ☑ NO

SUPPLEMENTAL FUNDS PROVIDED: **$0.00**

IS THIS REQUEST IN ACCORDANCE WITH ENVIRONMENTAL DOCUMENTS? ☑ YES ☐ NO

CCO DESCRIPTION:
Apply methacrylate EB Frame 1.

PROJECT DESCRIPTION:
Construct bridge, roadway, building and electrical system.

Original Contract Time:	Time Adj. This Change:	Previously Approved CCO Time Adjustments:	Percentage Time Adjusted: (including this change)	Total # of Unreconciled Deferred Time CCO(s): (including this change)
810 Day(s)	0 Day(s)	184 Day(s)	23 %	13

THIS CHANGE ORDER PROVIDES FOR:

Furnishing and applying methacrylate deck treatement to the approach slab at Abutment 23L of Bridge No. 34-0006L, and to the entire deck of Frame 1 of Bridge No. 34-0006R - including areas beyond the limits specified in Section 10-1.53 "CONCRETE STRUCTURE, DECK CRACK TREATMENT" of the Special Provisions.

This change is necessary to provide for uniform deck color and texture. Section 10-1.53 "CONCRETE STRUCTURE, DECK CRACK TREATMENT" of the Special Provisions requires deck crack treatment for any 50 m2 area with 5 m or more of cracks greater than 0.5 mm. Treatment in accordance with the Special Provisions will leave the deck with an inconsistent surface. This change will only compensate the Contractor for methacrylate placed beyond areas required in the Special Provisions.

This work will be paid as Extra Work at Agreed Lump Sum of $33,942.54, which can be financed from the contingency fund. This sum constitutes full compensation, including markups, for this change. A cost analysis submitted by the contractor, which is verified as reasonable by the Engineer, is on file in the Resident Engineer's office.

No adjustment of contract time is warranted since this change does not affect the controlling operation.

Design and Maintenance concurrence is not necessary because this CCO does not make any changes to the structure.

CONCURRED BY:

Construction Engineer:	Ben Ghafghazi	Date 2/25/2010
Bridge Engineer:	Mehran Ardakanian	Date 2/25/2010
Project Engineer:		Date
Project Manager:		Date
FHWA Rep.:		Date
Environmental:		Date
Other (specify):		Date
Other (specify):		Date
District Prior Approval By:		Date
HQ (Issue Approve) By:		Date
Resident Engineer's Signature:		Date 2/25/2010

ESTIMATE OF COST

	THIS REQUEST	TOTAL TO DATE
ITEMS	$0.00	$0.00
FORCE ACCOUNT	$0.00	$0.00
AGREED PRICE	$33,942.54	$33,942.54
ADJUSTMENT	$0.00	$0.00
TOTAL	$33,942.54	$33,942.54

FEDERAL PARTICIPATION

☐ PARTICIPATING ☐ PARTICIPATING IN PART ☑ NONE
☐ NON-PARTICIPATING (MAINTENANCE) ☐ NON-PARTICIPATING

FEDERAL SEGREGATION (if more than one Funding Source or P.I.P. type)
☑ CCO FUNDED PER CONTRACT ☐ CCO FUNDED AS FOLLOWS

FEDERAL FUNDING SOURCE	PERCENT

ADA Notice: For individuals with sensory disabilities, this document is available in alternate formats. For information call: (916) 654-6410 or TDD (916) 654-3880 or write Records and Forms Management, 1120 N Street, MS-89, Sacramento, CA 95814.

STATE OF CALIFORNIA - DEPARTMENT OF TRANSPORTATION

CONTRACT CHANGE ORDER

Change Requested by: Engineer

CCO: 138	Suppl. No. 0	Contract No. 04 - 0120L4	Road ALA-80-1.6/2.7	FED. AID LOC.: NO FED AID

To: **M C M CONSTRUCTION INC**

You are directed to make the following changes from the plans and specifications or do the following described work not included in the plans and specifications for this contract. ***NOTE: This change order is not effective until approved by the Engineer.***

Description of work to be done, estimate of quantities and prices to be paid. (Segregate between additional work at contract price, agreed price and force account.) Unless otherwise stated, rates for rental of equipment cover only such time as equipment is actually used and no allowance will be made for idle time. This last percentage shown is the net accumulated increase or decrease from the original quantity in the Engineer's Estimate.

Extra Work at Lump Sum:

Provide labor, equipment and materials for fabricating 90 degree elbows for bikepath railing. This shall be in lieu of mechanical bending. Full penetration welding shall be performed on the six elbows, which are shown in the contract plan sheets 294R1, 295R1, 296R1, 297R1, and 428R1 of 643. For this work, the contractor will be paid the sum of $5,837.40. This sum constitutes full compensation, including markups, for this change.

Estimated cost of Extra Work at Lump Sum $6,129.27

Estimated Cost: Increase ☑ Decrease ☐ $6,129.27

By reason of this order the time of completion will be adjusted as follows: 0 days

Submitted by

Signature	Resident Engineer BEN GHAFGHAZI	Date 2/23/2010

Approval Recommended by

Signature	Construction Engineer Ben Ghafghazi	Date 2/23/2010

Engineer Approval by

Signature	Construction Engineer Ben Ghafghazi	Date 3/15/2010

We the undersigned contractor, have given careful consideration to the change proposed and agree, if this proposal is approved, that we will provide all equipn furnish the materials, except as may otherwise be noted above, and perform all services necessary for the work above specified, and will accept as full paymer therefor the prices shown above.

NOTE: If you, the contractor, do not sign acceptance of this order, your attention is directed to the requirements of the specifications as to proceeding with the ordered work and filing a written protest within the time therein specified.

Contractor Acceptance by

Signature	(Print name and title) EDMUNDO A. PUCHI, TREASURER	Date 3/2/10

STATE OF CALIFORNIA - DEPARTMENT OF TRANSPORTATION

CONTRACT CHANGE ORDER MEMORANDUM

DATE: 12/29/2009 Page 1 of 1

TO: AMER BATA / BEN GHAFGHAZI	FILE: E.A. 04 - 0120L4
FROM: BEN GHAFGHAZI	CO-RTE-PM ALA-80-1.6/2.7
	FED. NO. NO FED AID
CCO#: 138 SUPPLEMENT#: 0 Category Code: CHPT	CONTINGENCY BALANCE (incl. this change) $3,088,866.40
COST: $6,129.27 INCREASE ☑ DECREASE ☐	HEADQUARTERS APPROVAL REQUIRED? ☐ YES ☑ NO
SUPPLEMENTAL FUNDS PROVIDED: $0.00	IS THIS REQUEST IN ACCORDANCE WITH ENVIRONMENTAL DOCUMENTS? ☑ YES ☐ NO
CCO DESCRIPTION: Fabricate bikepath elbows.	**PROJECT DESCRIPTION:** Construct bridge, roadway, building and electrical system.

Original Contract Time:	Time Adj. This Change:	Previously Approved CCO Time Adjustments:	Percentage Time Adjusted: (including this change)	Total # of Unreconciled Deferred Time CCO(s): (including this change)
810 Day(s)	0 Day(s)	184 Day(s)	23 %	14

THIS CHANGE ORDER PROVIDES FOR:

Additional costs for fabricating 90-degree elbows and extra welding on the Eastbound Oakland Touchdown bike path railing. This shall be in lieu of mechanical bending. Full penetration welding shall be performed on the fabricated elbows. This work is to be performed on the six elbows shown in the contract plan sheets 294R1, 295R1, 296R1, 297R1, and 428R1 of 643. This work shall be done in accordance with Section 10-1.98 "BIKEPATH RAILING" of the Special Provisions.

This change is necessary because the specified elbow radius of the bike path railing cannot be obtained by mechanical bending, a method that was originally anticipated in the contract documents. Meeting the specified radius will require fabricated elbows to be purchased and welded (full-penetration welding). Caltrans METS has concurred that mechanical bending cannot produce the specified radius. Therefore, it is proposed to compensate the contractor for the additional costs involved in procurement of the elbows and the extra welding required.

Payment for the Extra Work will be a Lump Sum of $6129.27, which can be financed from the contingency fund. This sum constitutes full compensation, including markups, for this change. A cost estimate has been submitted by the contractor and is verified as reasonable by the Engineer.

This change has been discussed and concurred with Elizabeth Moore of METS.

No adjustment of contract time is warranted as this change does not affect the controlling operation

CONCURRED BY:		
Construction Engineer:	Ben Ghafghazi	Date 2/23/2010
Bridge Engineer:		Date
Project Engineer:		Date
Project Manager:		Date
FHWA Rep.:		Date
Environmental:		Date
Other (specify):	Elizabeth Moore , METS	Date 11/29/09
Other (specify):		Date
District Prior Approval By:		Date
HQ (Issue Approve) By:		Date
Resident Engineer's Signature:		Date 2/23/2010

ESTIMATE OF COST

	THIS REQUEST	TOTAL TO DATE
ITEMS	$0.00	$0.00
FORCE ACCOUNT	$0.00	$0.00
AGREED PRICE	$6,129.27	$6,129.27
ADJUSTMENT	$0.00	$0.00
TOTAL	$6,129.27	$6,129.27

FEDERAL PARTICIPATION

☐ PARTICIPATING ☐ PARTICIPATING IN PART ☑ NONE
☐ NON-PARTICIPATING (MAINTENANCE) ☐ NON-PARTICIPATING

FEDERAL SEGREGATION (if more than one Funding Source or P.I.P. type)
☐ CCO FUNDED PER CONTRACT ☐ CCO FUNDED AS FOLLOWS

FEDERAL FUNDING SOURCE	PERCENT

ADA Notice: For individuals with sensory disabilities, this document is available in alternate formats. For information call: (916) 654-6410 or TDD (916) 654-3880 or write Records and Forms Management, 1120 N Street, MS-89, Sacramento, CA 95814.

CONTRACT CHANGE ORDER

Change Requested by:

CCO: 139	Suppl. No. 0	Contract No. 04 - 0120L4	Road ALA-80-1.6/2.7	FED. AID LOC.: NO FED AID

To: **M C M CONSTRUCTION INC**

You are directed to make the following changes from the plans and specifications or do the following described work not included in the plans and specifications for this contract. ***NOTE: This change order is not effective until approved by the Engineer.***

Description of work to be done, estimate of quantities and prices to be paid. (Segregate between additional work at contract price, agreed price and force account.) Unless otherwise stated, rates for rental of equipment cover only such time as equipment is actually used and no allowance will be made for idle time. This last percentage shown is the net accumulated increase or decrease from the original quantity in the Engineer's Estimate.

Provide labor, equipment and materials for performing the electrical changes as described below. The work specified herein, and all work otherwise directed by the Engineer, shall be performed in accordance with Section 86 "SIGNALS, LIGHTING AND ELECTRICAL SYSTEMS" of the Standard Specifications, and Section 10-3.10 "CONDUCTORS, CABLE AND WIRING" of Special Provisions.

Extra Work at Lump Sum:

1) As shown on sheets 3 of 13 through 5 of 13 of this CCO, re-route the temporary 12.47 kV (medium voltage) cable and conduit underground instead of overhead, between the new Mole Substation and the existing medium voltage vault at "MRDTR Line" Sta. 10+75. Also, between the existing high voltage manhole at "MRDTR Line" Sta. 10+75 and manhole 22, disconnect, remove and salvage the existing temporary underground and overhead 12.47 kV cable and conduit.

2) As shown on sheets 3 of 13 through 5 of 13 of this CCO, at manholes #22, 28 and 34, proceed per the revised details for 12.47 kV cable shield termination and grounding.
Perform hi-pot testing on the permanent 12.47 kV cable. Certificate of compliance shall be provided, and all high-voltage manholes shall be dewatered before entering.

3) Inside existing Oakland Substation building, proceed per the cable termination details provided on sheets 6, 7, 8, 9, 10, 11, 12 and 13 of 13, for the 50 pair 18 awg cable for the SCADA and Caltrans Telephone system. Also, proceed per the revised cable grounding shield termination details of the 50 pair 18 awg for the SCADA inside New Mole Substation and existing Oakland Substation building.

4) Install manhole marker as shown in 2004 Standard Plan A73A Type L-1, with 2-line labeling as follows: "TOS/COM", "High Voltage", "600 V" and "Non Caltrans", as well as manhole numbers as indicated in the contract plans.
Install 2-in stainless steel tags on each exposed conduit where bushing is installed with conduit number laser engraved. Tags shall be attached to the conduit with stainless steel wire.
Install Nylon Ty wraps on each exposed cable with 2-line labeling (e.g. "Bike Path", "Light Pipe", etc.) and designation number (e.g. 52-21N).

For this work, the contractor will be paid the sum of $185,018.50, this sum constitutes full compensation, including markups, for this change.

Estimated cost of Extra Work at Lump Sum $185,018.50

Consideration of a time adjustment will be deferred until completion of the work specified herein. Determination of a commensurate time extension will be made in accordance with Section 8-1.07, "Liquidated Damages", of the Standard Specifications.

CONTRACT CHANGE ORDER

Change Requested by:

CCO: 139	Suppl. No. 0	Contract No. 04 - 0120L4	Road ALA-80-1.6/2.7	FED. AID LOC.: NO FED AID

Estimated Cost: **Increase** ☑ **Decrease** ☐ **$185,018.50**

By reason of this order the time of completion will be adjusted as follows: Deferred

Signature	**Resident Engineer** BEN GHAFGHAZI	**Date** 3/15/2010
Signature	**Construction Engineer** Ben Ghafghazi	**Date** 3/15/2010
Signature	**Construction Manager** Amer Bata	**Date** 3/22/10

We the undersigned contractor, have given careful consideration to the change proposed and agree, if this proposal is approved, that we will provide all equipment, furnish the materials, except as may otherwise be noted above, and perform all services necessary for the work above specified, and will accept as full payment therefor the prices shown above.

NOTE: If you, the contractor, do not sign acceptance of this order, your attention is directed to the requirements of the specifications as to proceeding with the ordered work and filing a written protest within the time therein specified.

Signature	**(Print name and title)** EDMUNDO A. PUCHI, TREASURER	**Date** 3/18/10

DIST	COUNTY	ROUTE	KILOMETER POST TOTAL PROJECT	SHEET No	TOTAL SHEETS
04	Ala	80	1.6/2.7	491A R0	643

12/08/09
REGISTERED ELECTRICAL ENGINEER DATE

PLANS APPROVAL DATE

REGISTERED PROFESSIONAL ENGINEER ADI WALIEDDINE No. 11465 Exp. 12/31/2009 ELECTRICAL STATE OF CALIFORNIA

PB POWER, Inc.
A Parsons Brinckerhoff Company
303 Second St., Suite 700N
San Francisco, CA 94107-1317

The State of California or its officers or agents shall not be responsible for the accuracy or completeness of electronic copies of this plan sheet.

Caltrans now has a web site! To get to the web site, go to http://www.dot.ca.gov

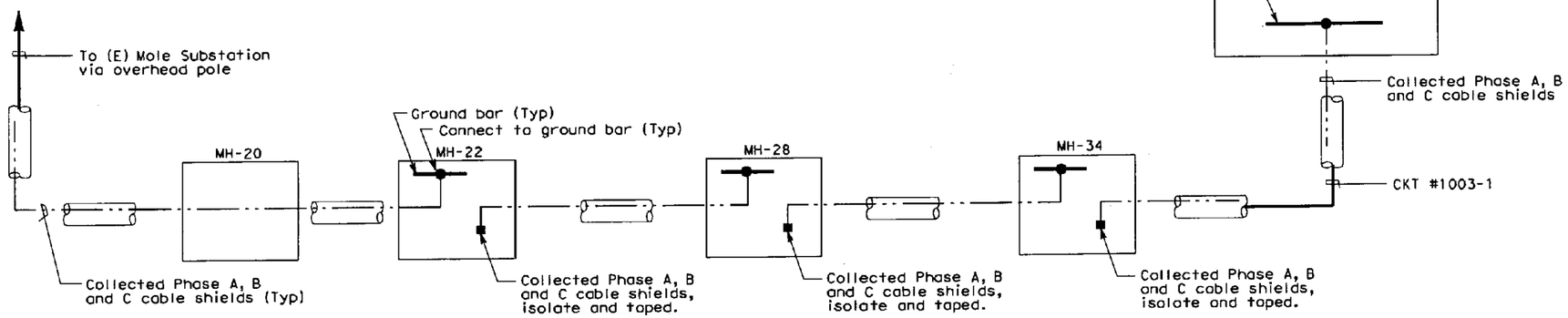

CABLE SHIELD CONNECTIONS-DIAGRAM A

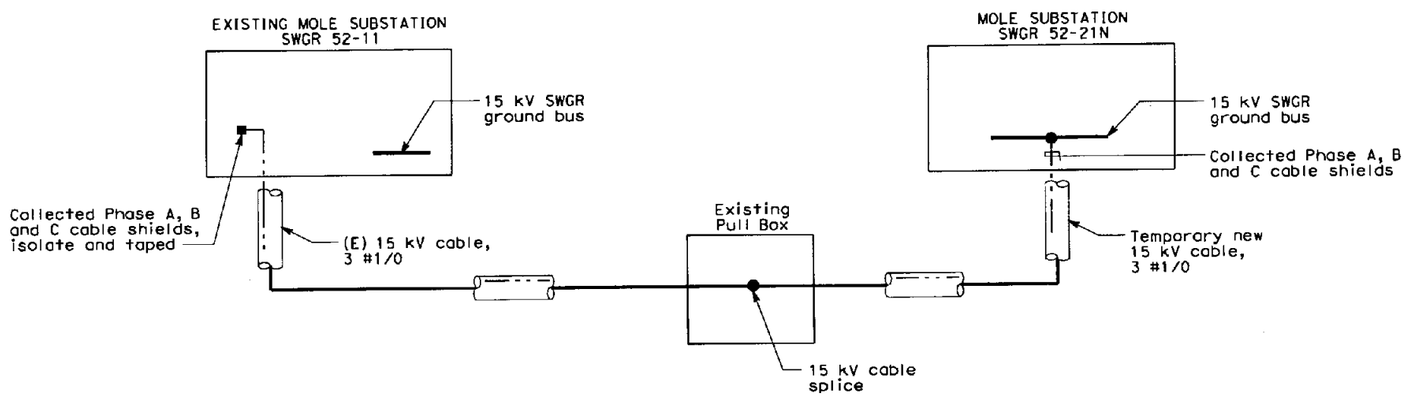

CABLE SHIELD CONNECTIONS-DIAGRAM B

MARK	DATE	DESCRIPTIONS	REV	CK	CCO NO.
0	12/08/09	New drawing. Added 15 kV cable shield terminations diagrams .	RSB	EJL	Temp 15 kV

REVISIONS

CONTRACT CHANGE ORDER NO. 139
SHEET 3 OF 13

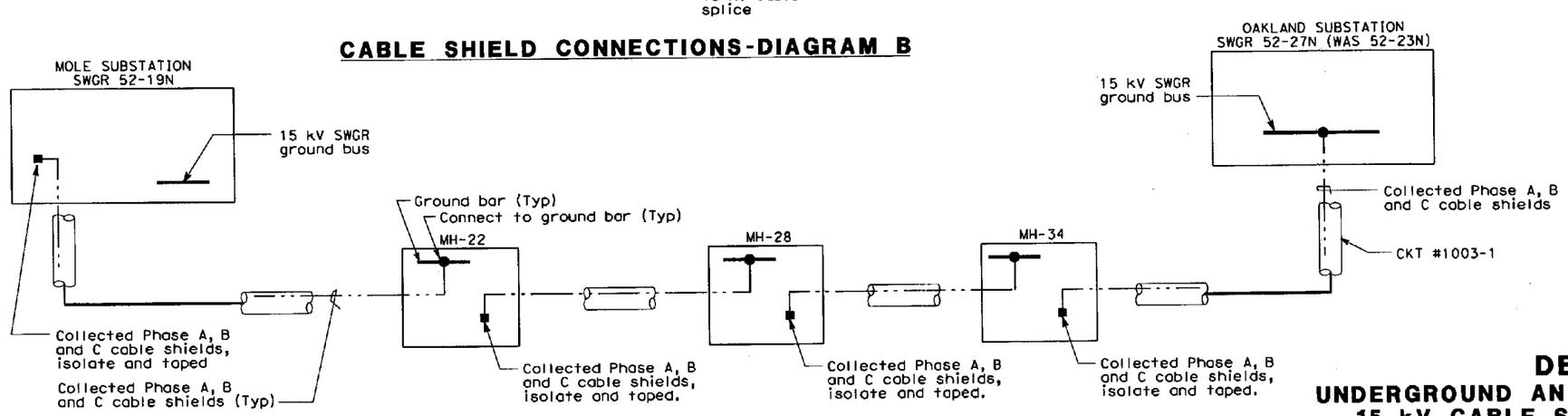

CABLE SHIELD CONNECTIONS
FINAL

DETAILS
UNDERGROUND AND ROADWAY AT-GRADE 15 kV CABLE SHIELD CONNECTIONS
NO SCALE

E-120A

THIS PLAN ACCURATE FOR ELECTRICAL WORK ONLY.

FOR REDUCED PLANS ORIGINAL SCALE IS IN MILLIMETERS 0 20 40 60 80

DGN FILE =>t:\13103\ms\pse\OTD-Contract 1\CCO\Electrical\CCO-Temp 15 kV\40120lua120A.dgn
USERNAME =>llorico

CU 04251 | EA 0120L1

DATE PLOTTED => 12/22/2009
TIME PLOTTED => 8:51:13 AM

LAST REVISION 00-00-00

DESIGN OVERSIGHT
BEHZAD GOLEMOHAMMADI

CALCULATED/DESIGNED BY | CHECKED BY

DATE | REVISED BY | DATE REVISED

STATE OF CALIFORNIA - DEPARTMENT OF TRANSPORTATION
Caltrans

DIST	COUNTY	ROUTE	KILOMETER POST TOTAL PROJECT	SHEET No	TOTAL SHEETS
04	Ala	80	1.6/2.7	554 R1	643

REGISTERED ELECTRICAL ENGINEER 05/15/06 DATE

1-29-07
PLANS APPROVAL DATE

REGISTERED PROFESSIONAL ENGINEER JENS ERLINGSSON No. 8249 Exp. 9/30/08 ELECTRICAL STATE OF CALIFORNIA

PB POWER, Inc.
A Parsons Brinckerhoff Company
303 Second St., Suite 700N
San Francisco, CA 94107-1317

The State of California or its officers or agents shall not be responsible for the accuracy or completeness of electronic copies of this plan sheet.

To get to the web Caltrans site, go to http://www.dot.ca.gov

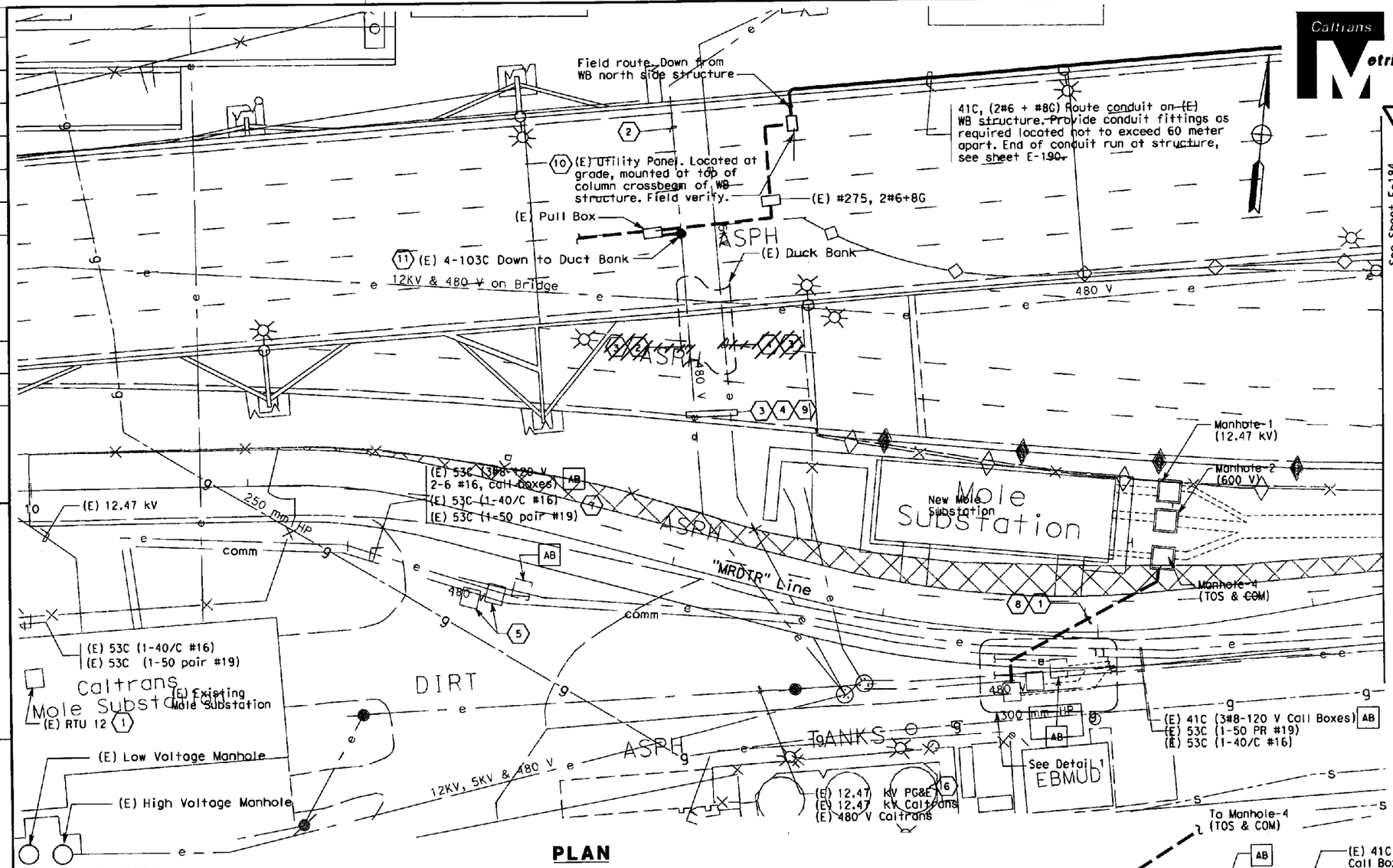

PLAN

SHEET NOTES:

1. Temporary communication cables, from the new Mole Substation to the (E) Mole Substation. ~~The temporary cables shall be installed and be operational prior to the removal of the existing underground duct bank to Toll Plaza.~~ (1)
2. Abandon conduit and remove 480 V conductors.
3. The exact number of conduits and type of conductors is not known.
4. Abandon conduit and remove 5 kV conductors.
5. Existing manholes, conduit and cables inside to remain. Contractor to ensure mechanical protection for entire duration of the project.
6. (NIC) PG&E 12.47 kV overhead line.
7. Once the entire duct bank has been completed and all cables have been installed and connected, these conduits shall be abandoned and the cables removed. Removed cables shall become the property of the contractor. Pull boxes shall be removed and become the property of the contractor.
8. 103 mm (RGS) with 50 pr. #19. (Contractor to match existing cable type). See sheet E-197 and E-201.
9. Contractor to protect (E) conduit and cables inside for duration as specified by the Engineer.
10. Install new conduit to (E) utility panel. Connect new matching cables of circuit #275 on primary side of circuit breaker inside utility panel. See sheet E-182 for location of (E) 480 v feeder circuit.
11. Cable circuit #275 (2#6+8G) inside one of the (E) conduit.

NOTES:

1. References:
   - For Underground and Roadway at Grade, plans, manholes and duct bank sections see sheets E-80 thru E-122.
   - For Mole Substation equipment arrangement, see sheet E-123.
2. Contractor shall verify exact location of existing gas and sewer outfall lines. For additional information, see utility plans.
3. All Temporary Underground and Roadway At-Grade is to remain in place at the end of the contract.

(4) REVISED PER ADDENDUM No. 4 DATED MAY 24, 2007

REGISTERED PROFESSIONAL ENGINEER FADI WALIEDDINE No. 11465 Exp. 12/31/2009 ELECTRICAL STATE OF CALIFORNIA (1)

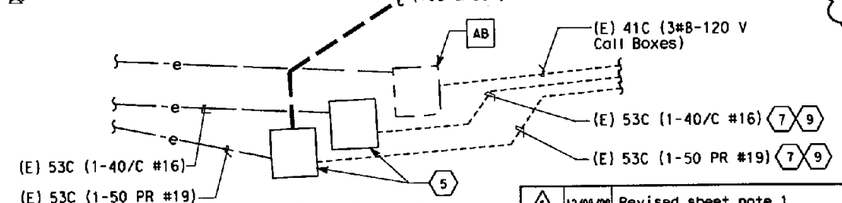

DETAIL 1
NO SCALE

MARK	DATE	DESCRIPTIONS	REV	CK	CCO NO.
1	12/08/09	Revised sheet note 1.	RSB	EJL	Trunkline

REVISIONS

CONTRACT CHANGE ORDER NO. 139
SHEET 34 OF 13

TEMPORARY UNDERGROUND AND ROADWAY AT-GRADE
(LIGHTING AND ELECTRICAL SYSTEMS)

SCALE: 1:200

E-183

DATE	REVISED BY	DATE REVISED
2/06		2/06

CALCULATED/DESIGNED BY
CHECKED BY

DESIGN OVERSIGHT
BEHZAD GOLEMOHAMMADI

STATE OF CALIFORNIA - DEPARTMENT OF TRANSPORTATION
Caltrans

LAST REVISION 00-00-00
DATE PLOTTED => 12/8/2009
TIME PLOTTED => 11:27:59 AM

FOR REDUCED PLANS ORIGINAL SCALE IS IN MILLIMETERS 0 20 40 60 80

DGN FILE =>T:\13103\WS\pse\OTD-Contract 1\CCO\Electrical\CCO_Trunkline\40120lua183r1.dgn
USERNAME =>liorico

CU 04251 | EA 0120L1

DIST	COUNTY	ROUTE	KILOMETER POST TOTAL PROJECT	SHEET No	TOTAL SHEETS
04	Ala	80	1.6/2.7	572 R1	643

REGISTERED ELECTRICAL ENGINEER 05/15/06 DATE

1-29-07
PLANS APPROVAL DATE

REGISTERED PROFESSIONAL ENGINEER JENS ERLINGSSON No. 8249 Exp. 9/30/08 ELECTRICAL STATE OF CALIFORNIA

PB POWER, Inc.
A Parsons Brinckerhoff Company
303 Second St., Suite 700N
San Francisco, CA 94107-1317

The State of California or its officers or agents shall not be responsible for the accuracy or completeness of electronic copies of this plan sheet.

To get to the Caltrans web site, go to: http://www.dot.ca.gov

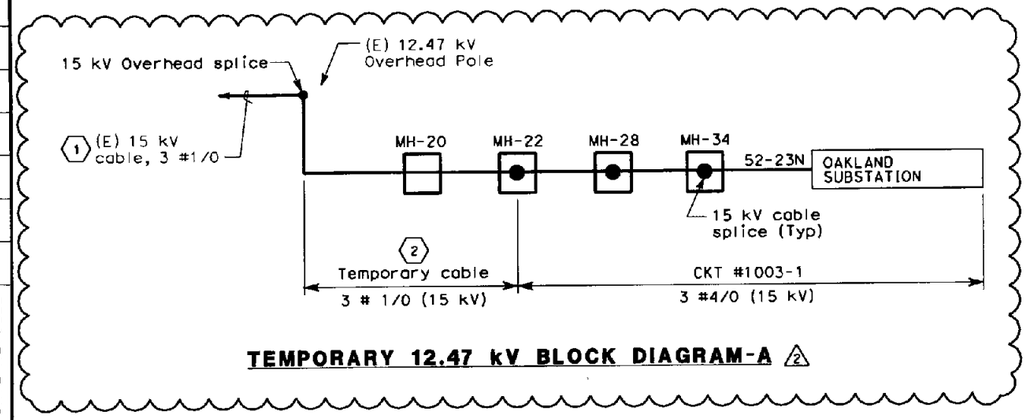

TEMPORARY 12.47 kV BLOCK DIAGRAM-A (2)

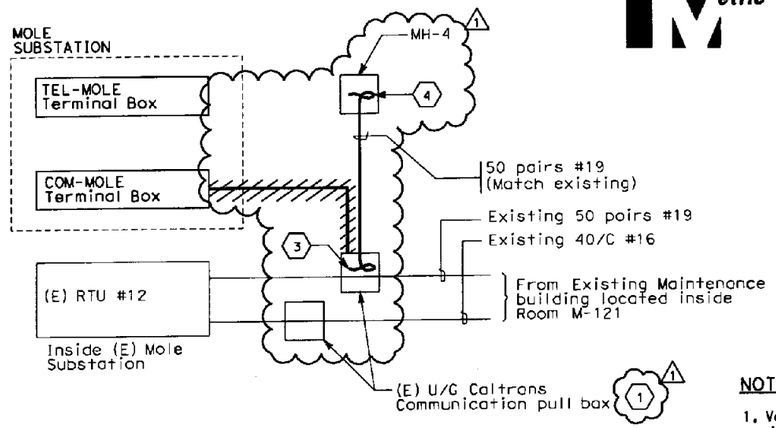

TEMPORARY SCADA AND TELEPHONE COMMUNICATION BLOCK DIAGRAM

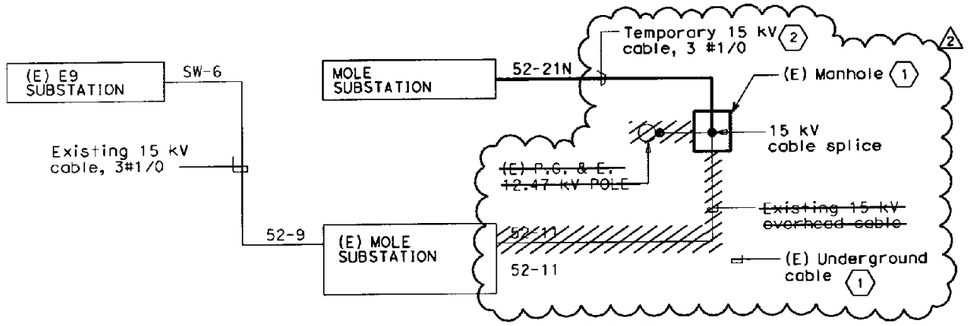

TEMPORARY 12.47 kV BLOCK DIAGRAM-B

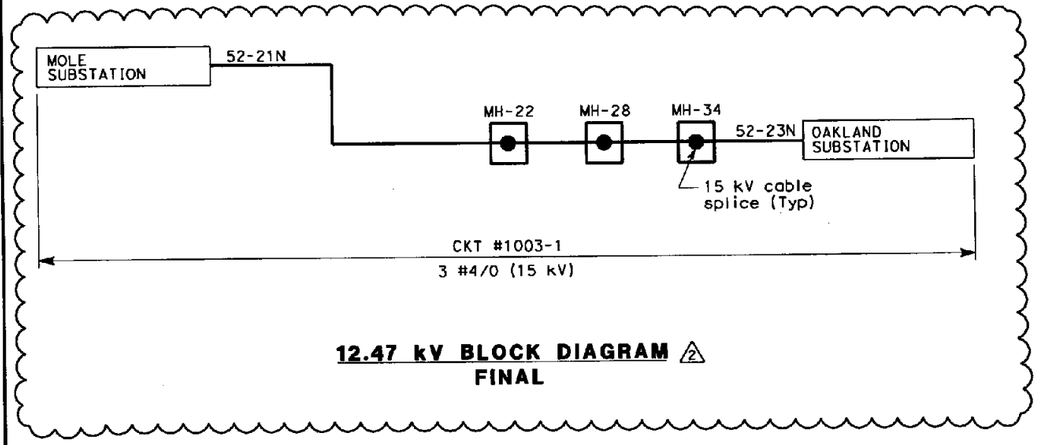

12.47 kV BLOCK DIAGRAM (2)
FINAL

NOTES:

1. Verify existing connections prior to installations.
2. All Temporory Underground and Roadway At-Grade work is to remain in place at the end of the contract.

(1) SHEET NOTES:

(1) Contractor to field verify location.
(2) Temporary cable in Diagram A shall be disconnected and remove before the temporory cable in Diagram B is connected.
(3) Coil end of cable inside the monhole. The end of the conductors shall be protected as per manufacturer's recommendation. Termination is by others.
(4) Coil sufficient length of cable (To TEL-MOLE location) inside the manhole. The end of the conductors shall be protected as per manufacturer's recommendation. Termination is by others.

REGISTERED PROFESSIONAL ENGINEER FADI WALIEDDINE No. 11465 Exp. 12/31/2009 ELECTRICAL STATE OF CALIFORNIA (1)(2)

MARK	DATE	DESCRIPTIONS	REV	CK	CCO NO.
(2)	12/08/09	Deleted temporary COM 50 pr #19. Removed termination splices from TEL Mole substation and existing pull box.	RSB	EJL	Trunkline
(1)	12/08/09	Added 12.47 kV block diagrams A, final and sheet notes1,2,3 & 4. Revised temporary 12.47 kV block diagram B.	RSB	EJL	Temp 15 kV
		REVISIONS			

CONTRACT CHANGE ORDER NO. 139
SHEET 5 OF 13

DETAILS
TEMPORARY UNDERGROUND AND ROADWAY AT-GRADE 12.47 kV AND SCADA/TELEPHONE BLOCK DIAGRAMS
NO SCALE

E-201

ALL DIMENSIONS IN MILIMETERS UNLESS OTHERWISE SHOWN

DATE	REVISED BY	DATE	REVISED BY
2/06		2/06	

CALCULATED/DESIGNED BY
CHECKED BY

DESIGN OVERSIGHT
BEHZAD GOLEMOHAMMADI

STATE OF CALIFORNIA - DEPARTMENT OF TRANSPORTATION
Caltrans

LAST REVISION 00-00-00
DATE PLOTTED => 12/22/2009
TIME PLOTTED => 8:54:30 AM

FOR REDUCED PLANS ORIGINAL SCALE IS IN MILLIMETERS 0 20 40 60 80

DGN FILE =>f:\13103\ms\pse\DTD-Contract 1\CCO\Electrical\CCO_Trunkline\40120lua201r1.dgn
USERNAME =>llorico

CU 04251 | EA 0120L1

DIST	COUNTY	ROUTE	KILOMETER POST TOTAL PROJECT	SHEET No	TOTAL SHEETS
04	Ala	80	1.6/2.7	530 R1	643

REGISTERED ELECTRICAL ENGINEER — DATE 05/15/06

1-29-07
PLANS APPROVAL DATE

REGISTERED PROFESSIONAL ENGINEER — JENS ERLINGSSON — No. 8249 — Exp. 9/30/08 — ELECTRICAL — STATE OF CALIFORNIA

PB POWER, Inc.
A Parsons Brinckerhoff Company
303 Second St., Suite 700N
San Francisco, CA 94107-1317

The State of California or its officers or agents shall not be responsible for the accuracy or completeness of electronic copies of this plan sheet.

To get to the Caltrans web site, go to: http://www.dot.ca.gov

Caltrans Metric

SHEET NOTES:

(1) For COM-23W connection diagram, see sheet E-162.

(2) For COM-21W connection diagram, see Skyway Contract 04-012024.

(3) Do not ground shield. △1

REGISTERED PROFESSIONAL ENGINEER — FADI WALIEDDINE — No. 11465 — Exp. 12/31/2009 — ELECTRICAL — STATE OF CALIFORNIA △1

NOTES:

1. References:
   - For conduit/cable troy schedules, see sheets starting at E-224.
   - For SCADA RTU cable block diagrams, see sheet E-169
   - For SCADA RTU system locations, see sheet E-154.

MARK	DATE	DESCRIPTIONS	REV	CK	CCO NO.
1	12/08/09	Revised shield termination. Added sheet note 3.	RSB	EJL	Trunkline

REVISIONS

CONTRACT CHANGE ORDER NO. 139
SHEET 56 OF 13

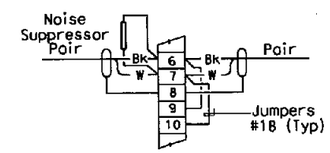

TYPICAL WIRING EACH PAIR

(2) To SCADA Communication Terminal Box COM-21W

CKT #1474-24
50 Pr's #18
Shielded Pairs
With Overall Shield

COMMUNICATION TERMINAL BOX

(1) To SCADA Communication Terminal Box COM-23W

CKT #1474-25
50 Pr's #18
Shielded Pairs
With Overall Shield

DETAILS
SCADA REMOTE TERMINAL UNIT SYSTEM
COM-22W TERMINAL BOX WIRING DIAGRAM
NO SCALE

E-159

STATE OF CALIFORNIA - DEPARTMENT OF TRANSPORTATION — Caltrans

DESIGN OVERSIGHT: BEHZAD GOLEMOHAMMADI

CALCULATED/DESIGNED BY	FK	DATE 2/06	REVISED BY	DATE REVISED
CHECKED BY	AB	2/06		

LAST REVISION 00-00-00 — DATE PLOTTED => 12/8/2009 — TIME PLOTTED => 11:22:13 AM

FOR REDUCED PLANS ORIGINAL SCALE IS IN MILLIMETERS: 0 20 40 60 80

DGN FILE =>T:\13103\WS\pse\OTD-Contract 1\CCO\Electrical\CCO_Trunkline\40120lua159r1.dgn
USERNAME =>liorico

CU 04251 — EA 0120L1

DIST	COUNTY	ROUTE	KILOMETER POST TOTAL PROJECT	SHEET No	TOTAL SHEETS
04	Ala	80	1.6/2.7	531 R1	643

REGISTERED ELECTRICAL ENGINEER — DATE 05/15/06

1-29-07
PLANS APPROVAL DATE

REGISTERED PROFESSIONAL ENGINEER — JENS ERLINGSSON — No. 8249 — Exp. 9/30/08 — ELECTRICAL — STATE OF CALIFORNIA

PB POWER, Inc.
A Parsons Brinckerhoff Company
303 Second St., Suite 700N
San Francisco, CA 94107-1317

The State of California or his officers or agents shall not be responsible for the accuracy or completeness of electronic copies of this plan sheet.

To get to the Caltrans web site, go to: http://www.dot.ca.gov

Caltrans Metric

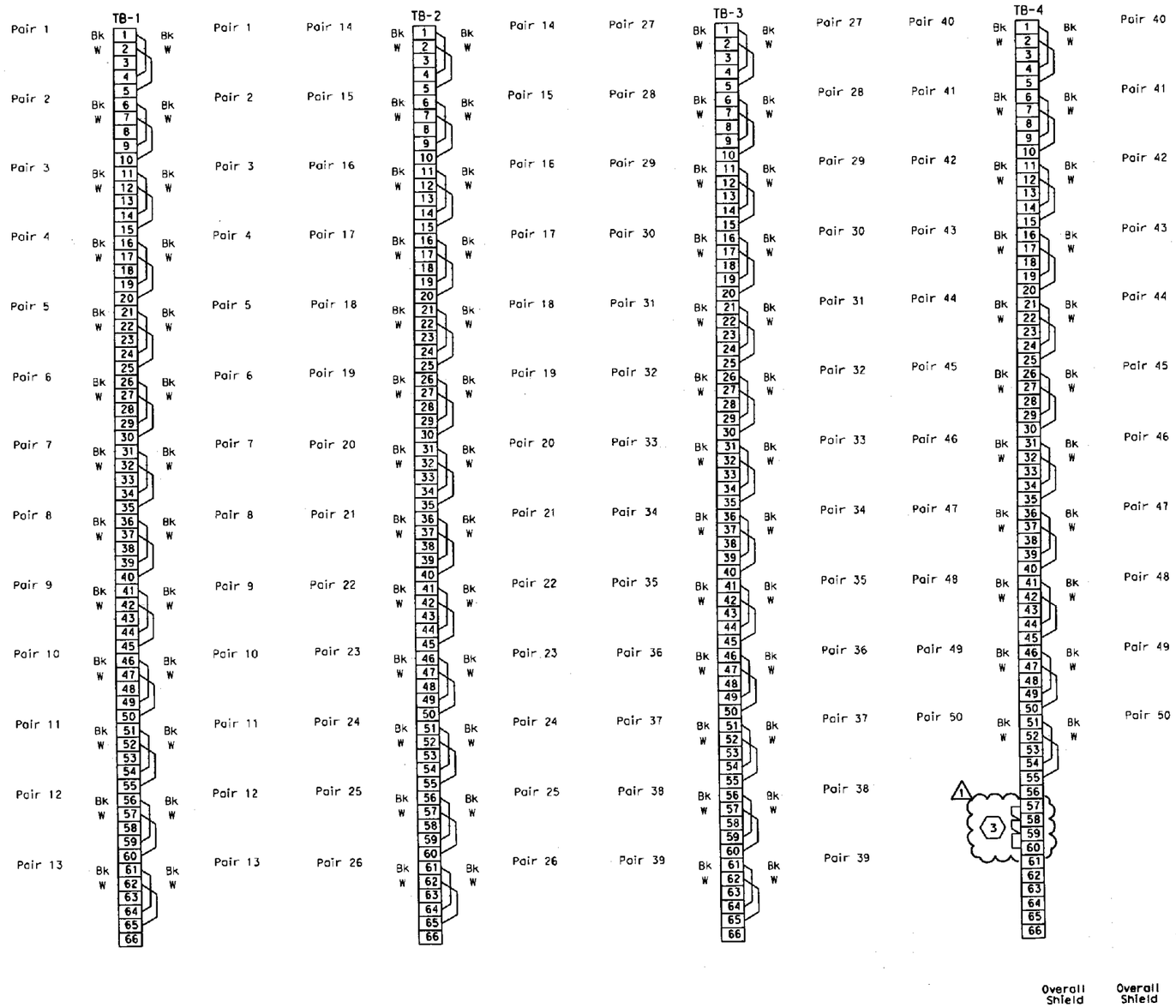

COMMUNICATION TERMINAL BOX

(2) To SCADA Communication Terminal Box COM-21E

CKT #2474-24
50 Pr's #18
Shielded Pairs
With Overall Shield

(1) To SCADA Communication Terminal Box COM-23E

CKT #2474-25
50 Pr's #18
Shielded Pairs
With Overall Shield

REGISTERED PROFESSIONAL ENGINEER — FADI WALIEDDINE — No. 11465 — Exp. 12/31/2009 — ELECTRICAL — STATE OF CALIFORNIA (1)

SHEET NOTES:

(1) For COM-23E connection diagram, (By other).

(2) For COM-21E connection diagram, see Skyway Contract 04-012024 (NIC).

(3) Do not ground shield. (1)

NOTES:

1. References:
   - For conduit/cable tray schedules, see sheets starting at E-224.
   - For SCADA RTU cable block diagram, see sheet E-169.
   - For SCADA RTU system locations, see sheet E-154.

MARK	DATE	DESCRIPTIONS	REV	CK	CCO NO.
1	12/08/09	Revised shield termination. Added sheet note 3.	RSB	EJL	Trunkline

REVISIONS

CONTRACT CHANGE ORDER NO. 139
SHEET 67 OF 13

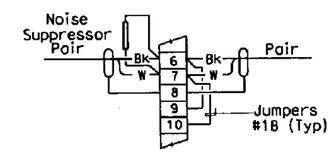

TYPICAL WIRING EACH PAIR

DETAILS
SCADA REMOTE TERMINAL UNIT SYSTEM
COM-22E TERMINAL BOX WIRING DIAGRAM
NO SCALE

E-160

STATE OF CALIFORNIA - DEPARTMENT OF TRANSPORTATION — Caltrans

DESIGN OVERSIGHT: BEHZAD GOLEMOHAMMADI

CALCULATED/DESIGNED BY: FK — DATE 2/06
CHECKED BY: AB — 2/06

REVISED BY — DATE REVISED

LAST REVISION 00-00-00 — DATE PLOTTED => 12/8/2009 — TIME PLOTTED => 11:23:10 AM

FOR REDUCED PLANS ORIGINAL SCALE IS IN MILLIMETERS: 0 20 40 60 80

DGN FILE =>T:\13103\WS\pse\OTD-Contract 1\CCO\Electrical\CCO_Trunkline\40120lua160r1.dgn
USERNAME =>llorico

CU 04251 — EA 0120L1

DIST	COUNTY	ROUTE	KILOMETER POST TOTAL PROJECT	SHEET No	TOTAL SHEETS
04	Ala	80	1.6/2.7	532 R2	643

REGISTERED ELECTRICAL ENGINEER 05/15/06 DATE

1-29-07
PLANS APPROVAL DATE

REGISTERED PROFESSIONAL ENGINEER JENS ERLINGSSON No. 8249 Exp. 9/30/08 ELECTRICAL STATE OF CALIFORNIA

PB POWER, Inc.
A Parsons Brinckerhoff Company
303 Second St., Suite 700N
San Francisco, CA 94107-1317

The State of California or its officers or agents shall not be responsible for the accuracy or completeness of electronic copies of this plan sheet.

To get to the Caltrans web site, go to: http://www.dot.ca.gov

Caltrans Metric

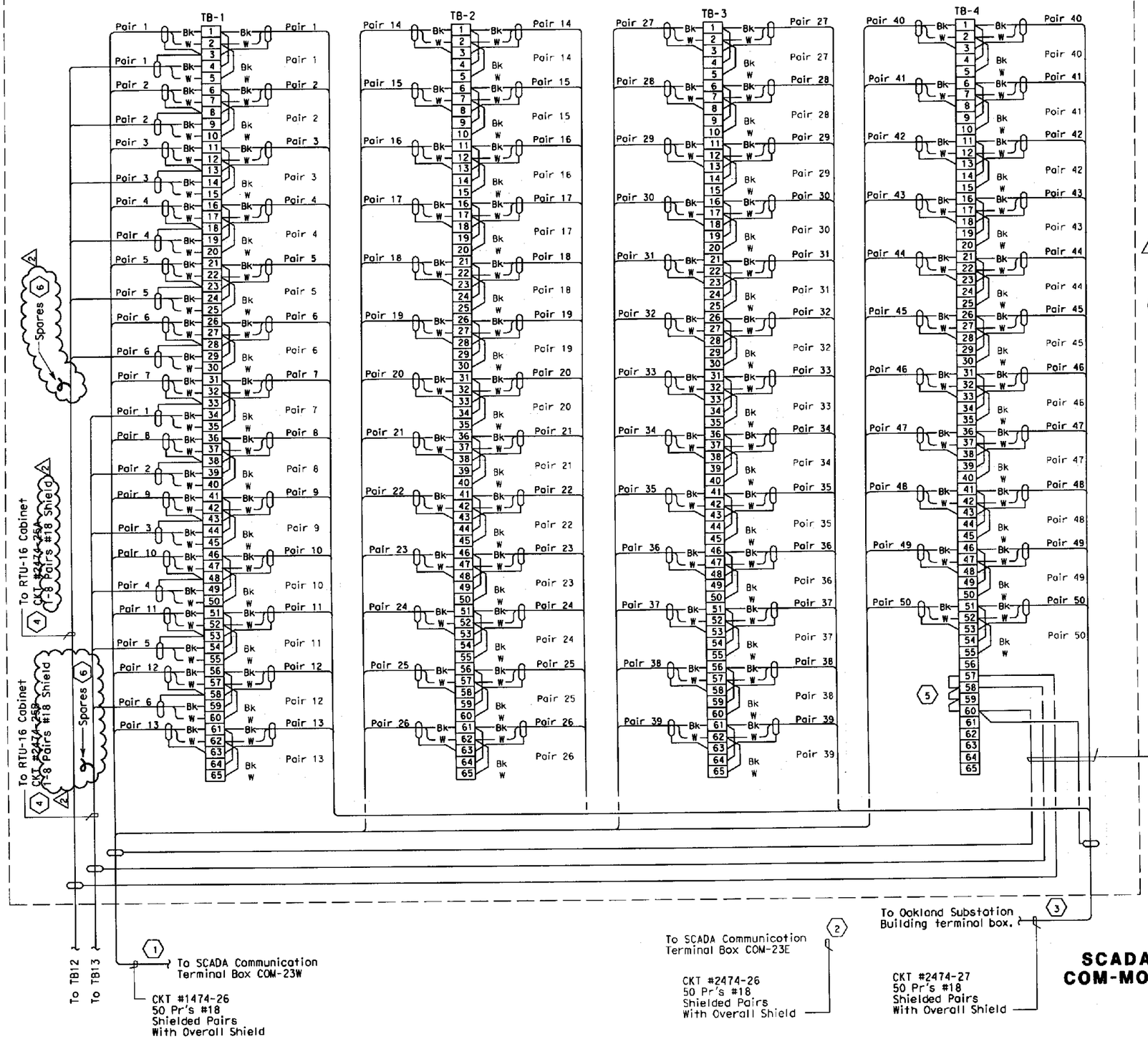

SHEET NOTES:

1. For COM-23W connection diagram, see sheet E-162.
2. For COM-23E connection diagram, (By others).
3. For COM-OAKLAND connection diagram, see sheet E-161A. △1
4. For RTU #16 connection diagram, see sheet E-157.
5. Do not ground shield. △1
6. Two pairs are spares. Isolate and taped. △2

REGISTERED PROFESSIONAL ENGINEER DAVID H. OTO No. 10699 Exp. 06/30/2011 ELECTRICAL STATE OF CALIFORNIA △2

REGISTERED PROFESSIONAL ENGINEER FADI WALIEDDINE No. 11465 Exp. 12/31/2009 ELECTRICAL STATE OF CALIFORNIA △1

NOTES:

1. References:
   - For conduit/cable tray schedules, see sheets starting at E-224.
   - For SCADA RTU cable block diagram, see sheet E-169.
   - For SCADA RTU system locations, see sheet E-154.

MARK	DATE	DESCRIPTIONS	REV	CK	CCO NO.
△2	1/29/10	Changed conductor size to 1-8 pairs #18. Added sheet notes 6.	RSB	EJL	Conductor Change/ Misc.
△1	12/08/09	Revised shield termination and sheet note 3. Added sheet note 5.	RSB	EJL	Trunkline

REVISIONS

CONTRACT CHANGE ORDER NO. 139
SHEET 3 OF 13

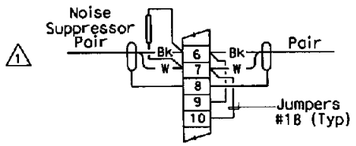

△1

TYPICAL WIRING EACH PAIR

DETAILS
SCADA REMOTE TERMINAL UNIT SYSTEM
COM-MOLE TERMINAL BOX WIRING DIAGRAM
NO SCALE

E-161

STATE OF CALIFORNIA - DEPARTMENT OF TRANSPORTATION
Caltrans

DESIGN OVERSIGHT: BEHZAD GOLEMOHAMMADI

CALCULATED/DESIGNED BY | CHECKED BY | DATE REVISED BY | DATE REVISED

LAST REVISION 00-00-00 | DATE PLOTTED => 2/2/2010 | TIME PLOTTED => 1:36:10 PM

FOR REDUCED PLANS ORIGINAL SCALE IS IN MILLIMETERS 0 20 40 60 80

DGN FILE =>T:\13103\MS\pse\OTD-Contract 1\CCO\Electrical\CCO-Conductor change & misc\40120lud161r2.dgn
USERNAME =>llorico

CU 04251 | EA 0120L1

DIST	COUNTY	ROUTE	KILOMETER POST TOTAL PROJECT	SHEET No	TOTAL SHEETS
04	Ala	80	1.6/2.7	532A RO	643

REGISTERED ELECTRICAL ENGINEER — DATE 12/08/09

REGISTERED PROFESSIONAL ENGINEER — FADI WALI HEDDINE — No. 11465 — Exp. 12/31/2009 — ELECTRICAL — STATE OF CALIFORNIA

PLANS APPROVAL DATE

PB POWER, Inc.
A Parsons Brinckerhoff Company
303 Second St., Suite 700N
San Francisco, CA 94107-1317

The State of California or its officers or agents shall not be responsible for the accuracy or completeness of electronic copies of this plan sheet.

Caltrans now has a web site! To get to the web site, go to http://www.dot.ca.gov

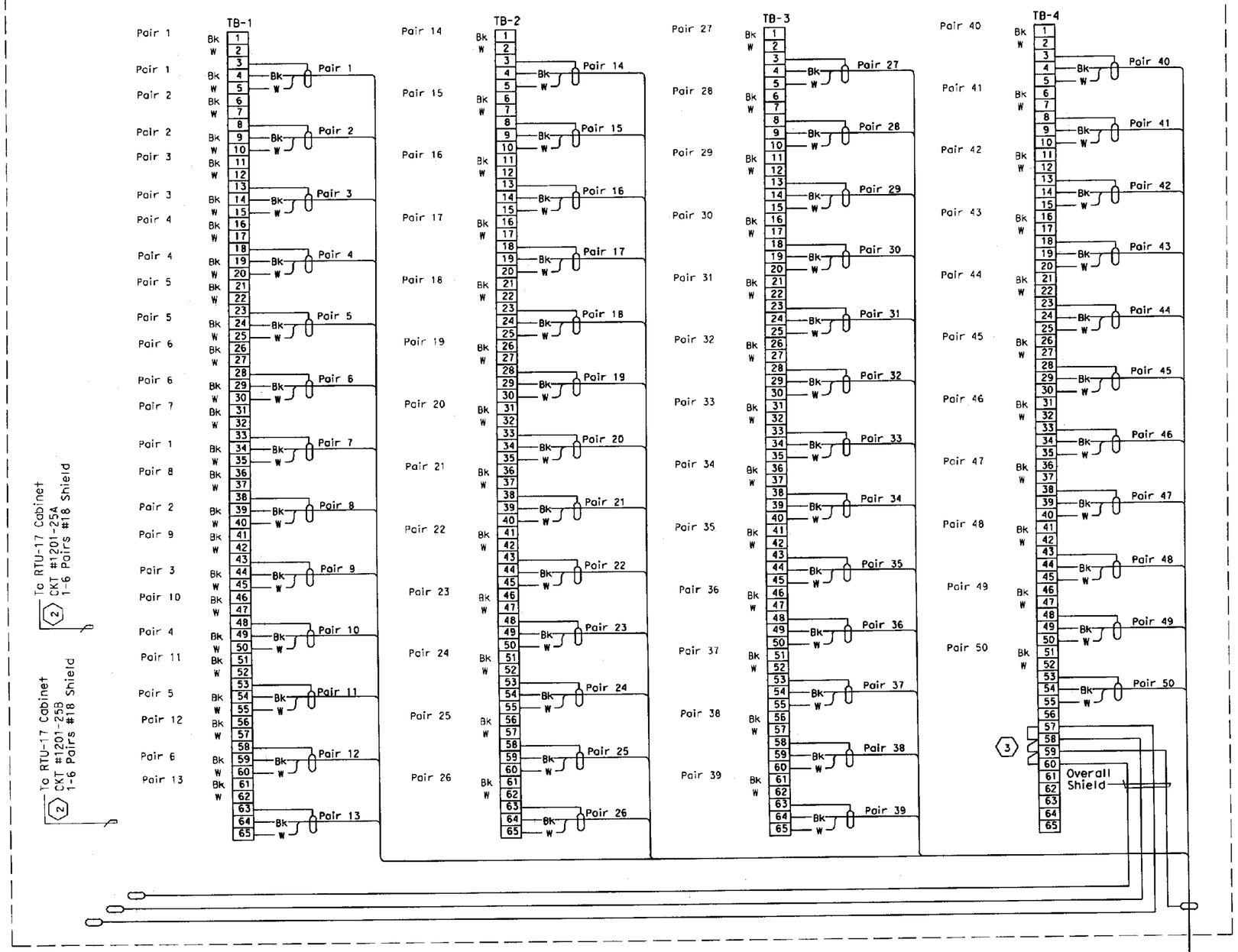

SHEET NOTES:

1. For COM-MOLE connection diagram, see sheet E-161.
2. For RTU #17 connection diagrams, see OAKLAND SUBSTATION contract (By others)
3. Do not ground shield.

NOTES:

1. References:
   - For conduit/cable tray schedules, see sheets starting at E-224.
   - For SCADA RTU cable block diagram, see sheet E-169.
   - For SCADA RTU system locations, see sheet E-154.

MARK	DATE	DESCRIPTIONS	REV	CK	CCO NO.
0	12/08/09	New drawing. Added CKT #2474-27 termination	RSB	EJL	Trunkline

REVISIONS

CONTRACT CHANGE ORDER NO. 139
SHEET 89 OF 13

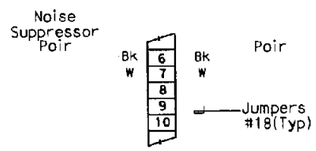

TYPICAL WIRING EACH PAIR

DETAILS
SCADA REMOTE TERMINAL UNIT SYSTEM COM-OAKLAND TERMINAL BOX WIRING DIAGRAM
NO SCALE

E-161A

STATE OF CALIFORNIA - DEPARTMENT OF TRANSPORTATION — Caltrans

DESIGN OVERSIGHT: BEHZAD GOLEMOHAMMADI

CALCULATED/DESIGNED BY | CHECKED BY | DATE | REVISED BY | DATE REVISED

LAST REVISION 00-00-00 | DATE PLOTTED => 12/8/2009 | TIME PLOTTED => 2:19:26 PM

FOR REDUCED PLANS ORIGINAL SCALE IS IN MILLIMETERS 0 20 40 60 80

DGN FILE =>f:\13103\ms\pse\OTD-Contract 1\CCO\Electrical\CCO_Trunkline\40120luc161A.dgn
USERNAME =>llarico

CU 04251 | EA 0120L1

DIST	COUNTY	ROUTE	KILOMETER POST TOTAL PROJECT	SHEET No	TOTAL SHEETS
04	Ala	80	1.6/2.7	533 R1	643

REGISTERED ELECTRICAL ENGINEER 05/15/06 DATE

1-29-07
PLANS APPROVAL DATE

REGISTERED PROFESSIONAL ENGINEER JENS ERLINGSSON NO. 8249 Exp. 9/30/08 ELECTRICAL STATE OF CALIFORNIA

PB POWER, Inc.
A Parsons Brinckerhoff Company
303 Second St., Suite 700N
San Francisco, CA 94107-1317

The State of California or its officers or agents shall not be responsible for the accuracy or completeness of electronic copies of this plan sheet.

To get to the Caltrans web site, go to: http://www.dot.ca.gov

Caltrans Metric

SHEET NOTES:

(1) For COM-MOLE connection diagram, see sheet E-161.

(2) For COM-22W connection diagram, see sheet E-159.

(3) Do not ground shield. 1

REGISTERED PROFESSIONAL ENGINEER FADI WALIEDDINE NO. 11465 Exp. 12/31/2009 ELECTRICAL STATE OF CALIFORNIA 1

NOTES:

1. References:
   - For conduit/cable tray schedules, see sheets starting at E-224.
   - For SCADA RTU cable block diagram, see sheet E-169.
   - For SCADA RTU system locations, see sheet E-154.

MARK	DATE	DESCRIPTIONS	REV	CK	CCO NO.
1	12/08/09	Revised shield termination. Added sheet note 3.	RSB	EJL	Trunkline

REVISIONS

CONTRACT CHANGE ORDER NO. 139
SHEET 18 OF 13

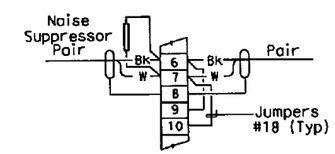

TYPICAL WIRING EACH PAIR

(2) To SCADA Communication Terminal Box COM-22W

CKT #1474-25
50 Pr's #18
Shielded Pairs
With Overall Shield

COMMUNICATION TERMINAL BOX

(1) To SCADA Communication Terminal Box COM-MOLE

CKT #1474-26
50 Pr's #18
Shielded Pairs
With Overall Shield

DETAILS
SCADA REMOTE TERMINAL UNIT SYSTEM
COM-23W TERMINAL BOX WIRING DIAGRAM
NO SCALE

E-162

STATE OF CALIFORNIA - DEPARTMENT OF TRANSPORTATION
Caltrans

DESIGN OVERSIGHT
BEHZAD GOLEMOHAMMADI

CALCULATED/DESIGNED BY	FK	DATE 2/06	REVISED BY
CHECKED BY	AB	2/06	DATE REVISED

LAST REVISION 00-00-00
DATE PLOTTED => 12/8/2009
TIME PLOTTED => 11:24:41 AM

FOR REDUCED PLANS ORIGINAL SCALE IS IN MILLIMETERS 0 20 40 60 80

DGN FILE =>T:\13103\MS\pse\OTD-Contract 1\CCO\Electrical\CCO_Trunkline\401201ua162r1.dgn
USERNAME =>llorico

CU 04251

EA 0120L1

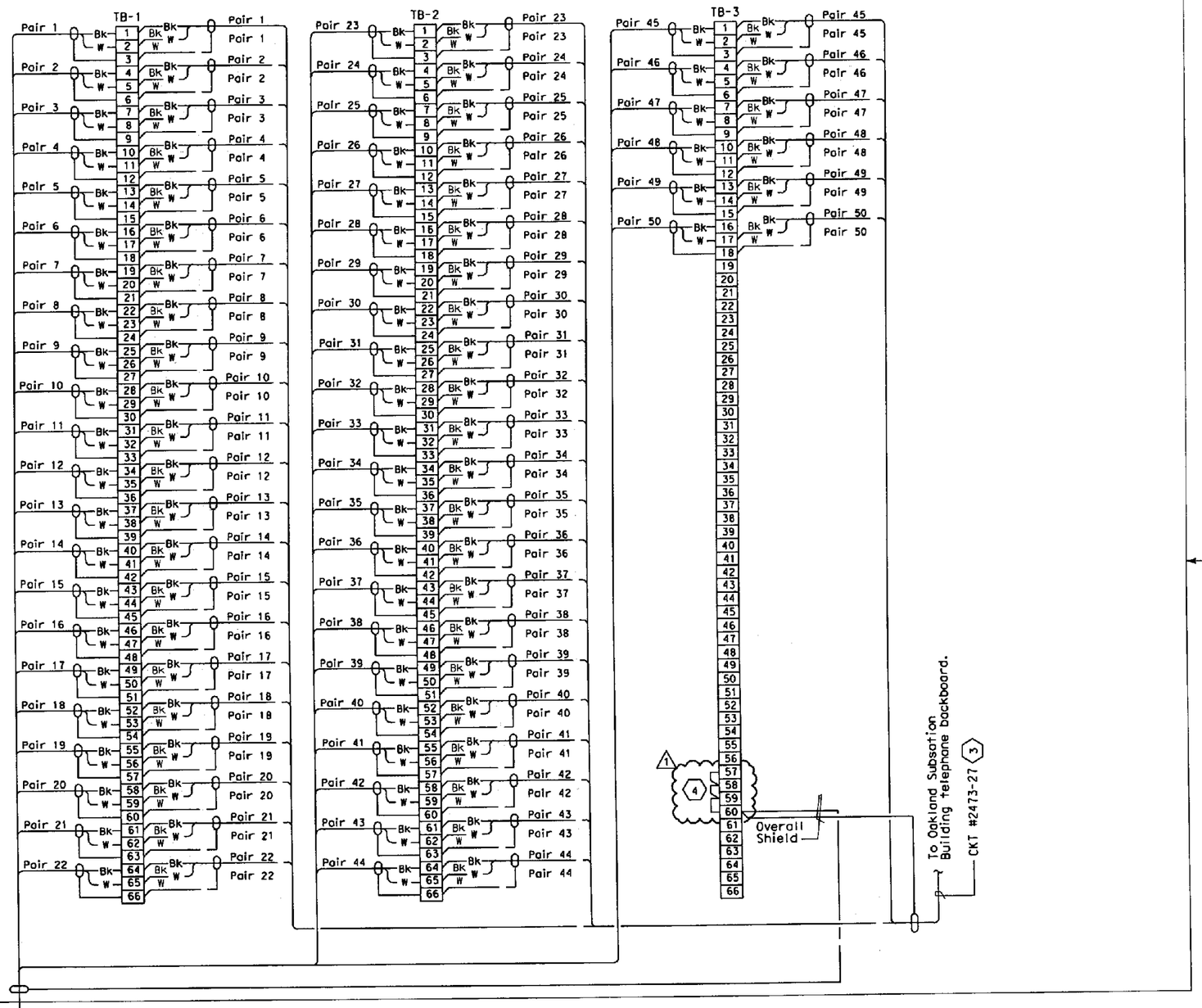

DIST	COUNTY	ROUTE	KILOMETER POST TOTAL PROJECT	SHEET No	TOTAL SHEETS
04	Ala	80	1.6/2.7	536 R1	643

REGISTERED ELECTRICAL ENGINEER 05/15/06 DATE

1-29-07
PLANS APPROVAL DATE

REGISTERED PROFESSIONAL ENGINEER JENS ERLINGSSON No. 8249 Exp. 9/30/08 ELECTRICAL STATE OF CALIFORNIA

PB POWER, Inc.
A Parsons Brinckerhoff Company
303 Second St., Suite 700N
San Francisco, CA 94107-1317

The State of California or its officers or agents shall not be responsible for the accuracy or completeness of electronic copies of this plan sheet.

To get to the Caltrans web site, go to: http://www.dot.ca.gov

SHEET NOTES:

1. For TEL-23W connection diagram, see sheet E-167.
2. For TEL-23E connection diagram, (By others).
3. For TEL-OAKLAND connection diagram, see sheet E-165A.
4. Do not ground shield.

NOTES:

1. References:
   - For conduit/cable tray schedules, see sheets starting at E-224.
   - For Telephone system cable block diagrams, see sheet E-169.
   - For Telephone system locations, see sheet E-154.

REGISTERED PROFESSIONAL ENGINEER FADI WALIEDDINE No. 11465 Exp. 12/31/2009 ELECTRICAL STATE OF CALIFORNIA

MARK	DATE	DESCRIPTIONS	REV	CK	CCO NO.
1	12/08/09	Revised shield termination and sheet note 3. Added sheet note 4	RSB	EJL	Trunkline

REVISIONS

CONTRACT CHANGE ORDER NO. 139
SHEET 10 OF 13

DETAILS
SCADA REMOTE TERMINAL UNIT SYSTEM
TEL-MOLE TERMINAL CONNECTION DIAGRAM
NO SCALE

E-165

CALCULATED/DESIGNED BY	FK	DATE 2/06
CHECKED BY	AB	2/06

REVISED BY — DATE REVISED

DESIGN OVERSIGHT
BEHZAD GOLEMOHAMMADI

STATE OF CALIFORNIA - DEPARTMENT OF TRANSPORTATION
Caltrans

Caltrans Metric

LAST REVISION 00-00-00
DATE PLOTTED => 12/8/2009
TIME PLOTTED => 2:18:43 PM

FOR REDUCED PLANS ORIGINAL SCALE IS IN MILLIMETERS 0 20 40 60 80

DGN FILE =>t:\13103\ms\pse\OTD-Contract 1\CCO\Electrical\CCO_Trunkline\40120luc165r1.dgn
USERNAME =>ilorico

CU 04251

EA 0120L1

DIST	COUNTY	ROUTE	KILOMETER POST TOTAL PROJECT	SHEET No	TOTAL SHEETS
04	Ala	80	1.6/2.7	536A R0	643

REGISTERED ELECTRICAL ENGINEER 12/08/09 DATE

PLANS APPROVAL DATE

REGISTERED PROFESSIONAL ENGINEER FADI WALIEDDINE No. 11465 Exp. 12/31/2009 ELECTRICAL STATE OF CALIFORNIA

PB POWER, Inc.
A Parsons Brinckerhoff Company
303 Second St., Suite 700N
San Francisco, CA 94107-1317

The State of California or its officers or agents shall not be responsible for the accuracy or completeness of electronic copies of this plan sheet.

Caltrans now has a web site! To get to the web site, go to http://www.dot.ca.gov

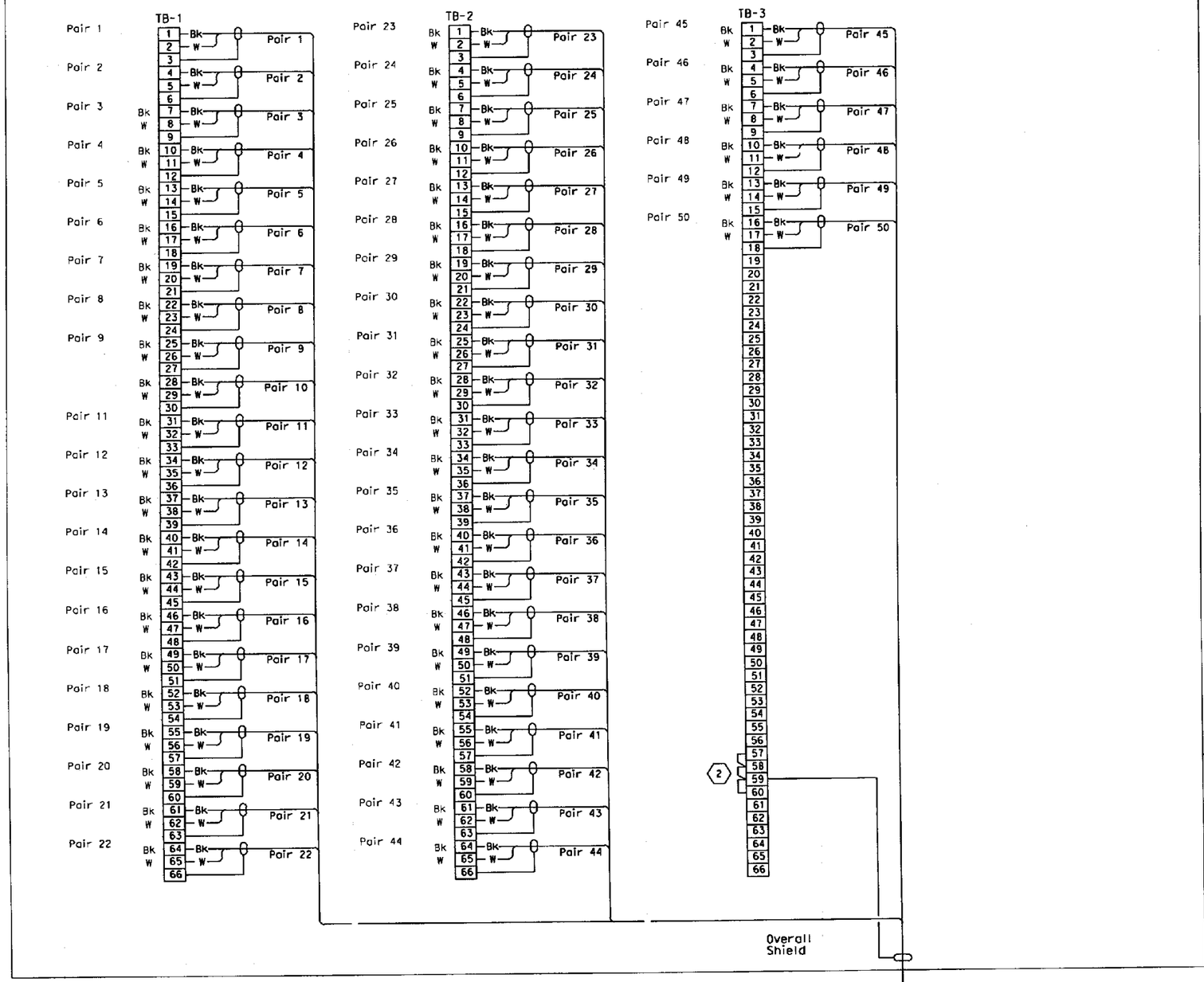

SHEET NOTES:

1. For TEL-MOLE connection diagram see OAKLAND SUBSTATION contract (By others).
2. Do not ground shield.

NOTES:

1. References:
   - For conduit/cable tray schedules, see sheets starting at E-224.

MARK	DATE	DESCRIPTIONS	REV	CK	CCO NO.
0	12/08/09	New drawing. Added CKT # 2473-27 termination.	RSB	EJL	Trunkline

REVISIONS

CONTRACT CHANGE ORDER NO. 139
SHEET 12 OF 13

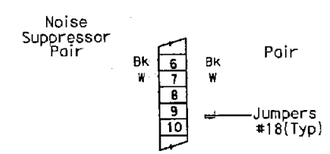

TYPICAL WIRING EACH PAIR

DETAILS
SCADA REMOTE TERMINAL UNIT SYSTEM
TEL-OAKLAND TERMINAL BOX
CONNECTION DIAGRAM

NO SCALE

E-165A

STATE OF CALIFORNIA - DEPARTMENT OF TRANSPORTATION
Caltrans

DESIGN OVERSIGHT
BEHZAD GOLEMOHAMMADI

CALCULATED/DESIGNED BY
CHECKED BY
DATE REVISED BY
DATE REVISED

LAST REVISION 00-00-00
DATE PLOTTED => 12/21/2009
TIME PLOTTED => 3:39:44 PM

FOR REDUCED PLANS ORIGINAL SCALE IS IN MILLIMETERS 0 20 40 60 80

DGN FILE =>f:\13103\ms\pse\OTD-Contract 1\CCO\Electrical\CCO_Trunkline\40120lua165A.dgn
USERNAME =>llorica

CU 04251

EA 0120L1

DIST	COUNTY	ROUTE	KILOMETER POST TOTAL PROJECT	SHEET No	TOTAL SHEETS
04	Ala	80	1.6/2.7	540 R1	643

REGISTERED ELECTRICAL ENGINEER 05/15/06 DATE

1-29-07
PLANS APPROVAL DATE

REGISTERED PROFESSIONAL ENGINEER JENS ERLINGSSON No. 8249 Exp. 9/30/08 ELECTRICAL STATE OF CALIFORNIA

PB POWER, Inc.
A Parsons Brinckerhoff Company
303 Second St., Suite 700N
San Francisco, CA 94107-1317

The State of California or its officers or agents shall not be responsible for the accuracy or completeness of electronic copies of this plan sheet.

To get to the Caltrans web site, go to: http://www.dot.ca.gov

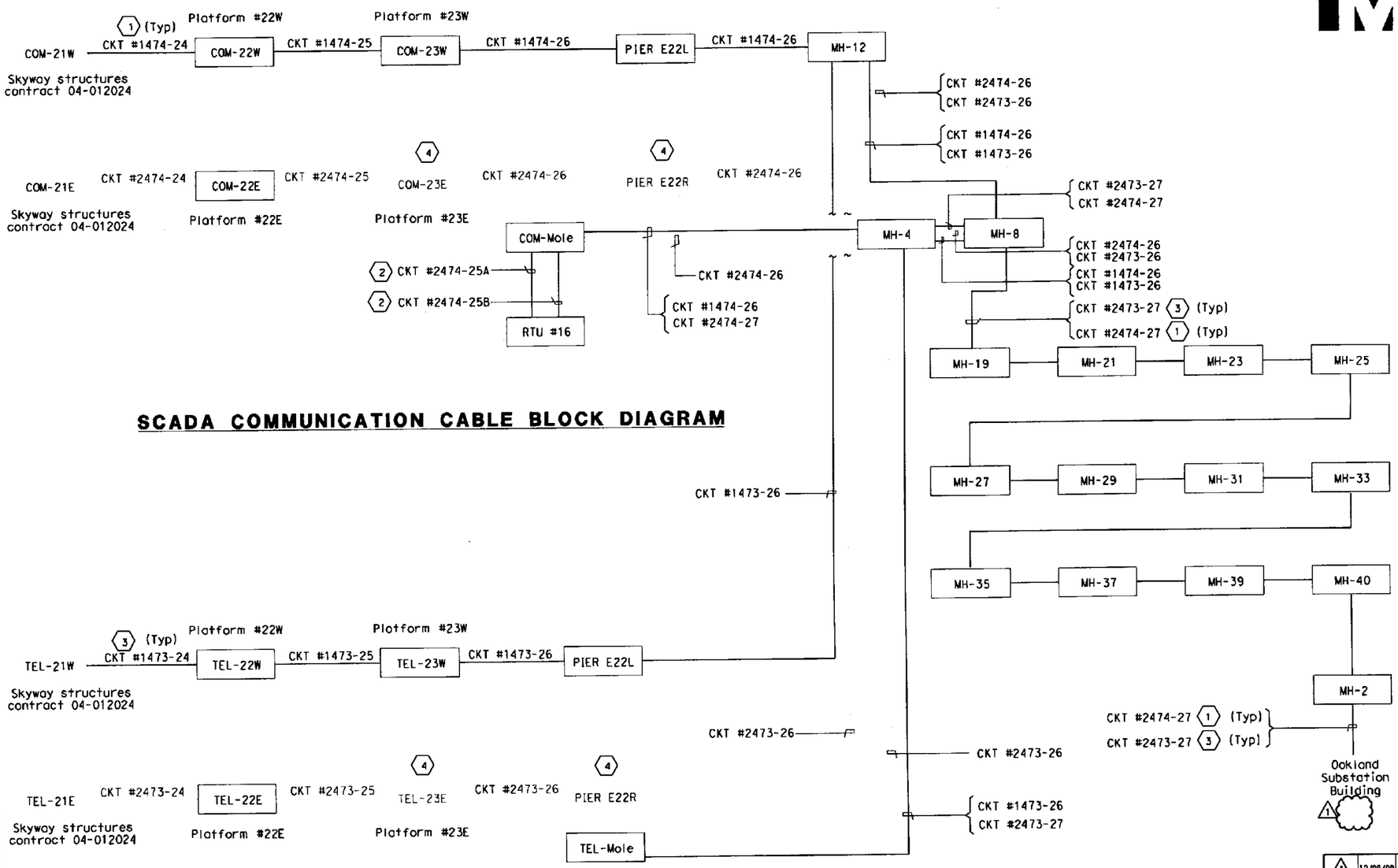

SCADA COMMUNICATION CABLE BLOCK DIAGRAM

TELEPHONE COMMUNICATION CABLE BLOCK DIAGRAM

SHEET NOTES:

(1) SCADA communication cable 50 pairs #18, shielded pairs and overall shield.

(2) RTU communication cables 1-6 pairs individually shielded with overall shield.

(3) Telephone 50 pairs #18, shielded pairs with overall shield.

(4) ~~(By others).~~ (1)

NOTES:

1. References:
   - For conduit/cable tray schedule, see sheets starting at E-224.
   - For RTU #16 connection diagram, see sheets E-156 thru E-158.
   - For COM-Mole Terminal Box connection diagram, see sheet E-161.
   - For Tel-Mole Terminal Box Connection diagram, see sheet E-165.
   - (1) For COM-OAKLAND Terminal Box connection diagram, see sheet E-161A.
   - For Tel-OAKLAND Terminal Box Connection diagram, see sheet E-165A.

REGISTERED PROFESSIONAL ENGINEER FADI WALIEDDINE No. 11465 Exp. 12/31/2009 ELECTRICAL STATE OF CALIFORNIA (1)

MARK	DATE	DESCRIPTIONS	REV	CK	CCO NO.
1	12/08/09	Added reference notes. Deleted sheet note 4.	RSB	EJL	Trunkline

REVISIONS

CONTRACT CHANGE ORDER NO. 139
SHEET 13 OF 13

DETAILS
SCADA REMOTE TERMINAL UNIT SYSTEM CABLE BLOCK DIAGRAMS
NO SCALE

E-169

DATE	FK	CALCULATED/ DESIGNED BY	REVISED BY
2/06	AB	CHECKED BY	DATE REVISED

DESIGN OVERSIGHT
BEHZAD GOLEMOHAMMADI

STATE OF CALIFORNIA - DEPARTMENT OF TRANSPORTATION
Caltrans

LAST REVISION 00-00-00
DATE PLOTTED => 12/8/2009
TIME PLOTTED => 11:26:49 AM

FOR REDUCED PLANS ORIGINAL SCALE IS IN MILLIMETERS 0 20 40 60 80

DGN FILE =>T:\13103\MS\pse\OTO-Contract 1\CCO\Electrical\CCO_Trunkline\401201ua169r1.dgn
USERNAME =>llorico

CU 04251

EA 0120L1

STATE OF CALIFORNIA - DEPARTMENT OF TRANSPORTATION

CONTRACT CHANGE ORDER MEMORANDUM

TO: AMER BATA / BEN GHAFGHAZI	FILE: E.A. 04 - 0120L4
	CO-RTE-PM ALA-80-1.6/2.7
FROM: BEN GHAFGHAZI	FED. NO. NO FED AID
CCO#: 139 SUPPLEMENT#: 0 Category Code: CBPC	CONTINGENCY BALANCE (incl. this change) $2,524,427.40
COST: $185,018.50 INCREASE ☑ DECREASE ☐	HEADQUARTERS APPROVAL REQUIRED? ☐ YES ☑ NO
SUPPLEMENTAL FUNDS PROVIDED: $0.00	IS THIS REQUEST IN ACCORDANCE WITH ENVIRONMENTAL DOCUMENTS? ☑ YES ☐ NO
CCO DESCRIPTION: 12.47 kV, Communication and Labeling	**PROJECT DESCRIPTION:** Construct bridge, roadway, building and electrical system.

Original Contract Time:	Time Adj. This Change:	Previously Approved CCO Time Adjustments:	Percentage Time Adjusted: (including this change)	Total # of Unreconciled Deferred Time CCO(s): (including this change)
810 Day(s)	DEF Day(s)	184 Day(s)	23 %	15

THIS CHANGE ORDER PROVIDES FOR:

Compensating the contractor for the electrical changes as described below. The work specified herein, and all work otherwise directed by the Engineer, shall be performed in accordance with Section 86 "SIGNALS, LIGHTING AND ELECTRICAL SYSTEMS" of the Standard Specifications, and Section 10-3.10 "CONDUCTORS, CABLE AND WIRING" of Special Provisions.

1) The contract plans incorrectly show the temporary 12.47 kV (medium voltage) cable being routed overhead and being spliced to the existing 12.47 kV (medium voltage) cable. Therefore, this change order is necessary to correct the routing of the temporary 15 kV (medium voltage) cable from overhead to underground, and splice this cable to the existing 12.47 kV (medium voltage) cable inside the high voltage vault.
Also, this change order corrects feeder routings through the duct bank to allow the existing Mole Substation to be fed from the new Mole Substation and the new Mole Substation to be fed from Oakland Substation, by disconnecting the temporary 12.27 kV feeder connection between Oakland Substation and the existing Mole Substation at the duct bank. This portion of the change is shown on sheets 3 of 13 through 5 of 13 of this CCO.

2) Details shown in the contract plans for the 12.47 kV cable shield termination and grounding inside manholes #22, 28 and 34 are insufficient. This change order is necessary to provide details for isolating the 12.47 kV shielding to protect all equipment inside both Oakland Substation and the new Mole Substation from reverse faults. For safety, this work requires dewatering of all high-voltage manholes before entering.
This portion of the change is also shown on sheets 3 of 13 through 5 of 13 of this CCO.

3) The contract plans do not show details for cable termination inside the existing Oakland Substation building. This change order provides the missing cable termination details for the 50 pair 18 awg cable for the SCADA and Caltrans Telephone system. The cable termination details are essential before activating any equipment inside the new Mole Substation.
This portion of the change is shown on sheets 6 of 13 through 13 of 13 of this CCO.

4) The contract plans and specifications do not call for any permanent labeling of conduits, cables and manholes. Permanent labeling is necessary for identification by the maintenance crew. Therefore, this change order provides for the permanent labeling of conduits, cables and manholes where directed by the Engineer.

Payment for the Extra Work will be a Lump Sum of $185,018.50, which can be financed from the contingency fund. A detailed cost analysis has been submitted by the Contractor, which was verified by the Engineer as reasonable.

This change order was requested by the Engineer. This change order has been discussed and concurred with Mike Forner, SFOBB Principal Construction Engineer and Patrick Treacy, HQ Construction Coordinator, as well as Jaime Gutierrez of Project Development, Parviz Boozarpour of Electrical Design, and Rene Fortaleza of Electrical Maintenance.

Adjustment of contract time is deferred pending completion of the work specified in this change as it may affect the controlling operation.

ADA Notice: For individuals with sensory disabilities, this document is available in alternate formats. For information call: (916) 654-6410 or TDD (916) 654-3880 or write Records and Forms Management, 1120 N Street, MS-89, Sacramento, CA 95814.

CONCURRED BY:		
Construction Engineer:	Ben Ghafghazi	Date 3/15/2010
Bridge Engineer:		Date
Project Engineer:	Jaime Gutierrez	Date 3/8/10
Project Manager:		Date
FHWA Rep.:		Date
Environmental:		Date
Other (specify):	Mike Fomer, Principal TE	Date 3/16/10
Other (specify):	Patrick Treacy, HQ Const. Coord.	Date 3/15/10
District Prior Approval By:		Date
HQ (Issue Approve) By:		Date
Resident Engineer's Signature:		Date 3/15/2010

ESTIMATE OF COST

	THIS REQUEST	TOTAL TO DATE
ITEMS	$0.00	$0.00
FORCE ACCOUNT	$0.00	$0.00
AGREED PRICE	$185,018.50	$185,018.50
ADJUSTMENT	$0.00	$0.00
TOTAL	$185,018.50	$185,018.50

FEDERAL PARTICIPATION

☐ PARTICIPATING ☐ PARTICIPATING IN PART ☑ NONE
☐ NON-PARTICIPATING (MAINTENANCE) ☐ NON-PARTICIPATING

FEDERAL SEGREGATION (If more than one Funding Source or P.I.P. type)
☑ CCO FUNDED PER CONTRACT ☐ CCO FUNDED AS FOLLOWS

FEDERAL FUNDING SOURCE	PERCENT

ADA Notice: For individuals with sensory disabilities, this document is available in alternate formats. For information call: (916) 654-6410 or TDD (916) 654-3880 or write Records and Forms Management, 1120 N Street, MS-89, Sacramento, CA 95814.

STATE OF CALIFORNIA - DEPARTMENT OF TRANSPORTATION

CONTRACT CHANGE ORDER MEMORANDUM

TO: AMER BATA / BEN GHAFGHAZI	FILE: **E.A.** 04 - 0120L4
FROM: BEN GHAFGHAZI	**CO-RTE-PM** ALA-80-1.6/2.7
	FED. NO. NO FED AID
CCO#: **139** SUPPLEMENT#: **1** Category Code: **CBPC**	CONTINGENCY BALANCE (incl. this change) **$1,860,034.40**
COST: **$55,721.25** INCREASE ☑ DECREASE ☐	HEADQUARTERS APPROVAL REQUIRED? ☑ YES ☐ NO
SUPPLEMENTAL FUNDS PROVIDED: **$0.00**	IS THIS REQUEST IN ACCORDANCE WITH ENVIRONMENTAL DOCUMENTS? ☑ YES ☐ NO
CCO DESCRIPTION: Manhole and Electrical Changes	**PROJECT DESCRIPTION:** Construct bridge, roadway, building and electrical system.

Original Contract Time:	Time Adj. This Change:	Previously Approved CCO Time Adjustments:	Percentage Time Adjusted: (including this change)	Total # of Unreconciled Deferred Time CCO(s): (including this change)
810 Day(s)	**DEF** Day(s)	**184** Day(s)	**23** %	**1**

THIS CHANGE ORDER PROVIDES FOR:

Compensating the contractor for the electrical changes as described below. The work specified herein, and all work otherwise directed by the Engineer, shall be performed in accordance with Section 86 "SIGNALS, LIGHTING AND ELECTRICAL SYSTEMS" of the Standard Specifications, and Section 10-3.10 "CONDUCTORS, CABLE AND WIRING" of the Special Provisions.

1) Provide a 10 ft. extension ladder for manhole access. ~~During~~ This portion of the change order has been requested by Caltrans Electrical Maintenance.

2) Provide two ground jumper cables for de-energizing 15 kV cables. The ground jumper cables are needed for the personnel to handle the 15 kV cables, but they were not called for in the contract. Therefore, Caltrans Electrical Construction requested that the ground jumper cables be provided to perform the de-energizing operation.

3) Provide additional conduit information on the manhole markers provided in CCO 139, Supplement 0, and remove the word "Danger", for all manholes along the new duct bank that was installed as part of this contract. After the installation of manhole markers, it was found that replacing the word "Danger" with additional conduit data would be more informative. This item of the change order is requested by Caltrans Electrical Maintenance.

4) Replace the existing 12.47 kV feeders from the old substation to the new Mole Substation. The testing of the existing feeders revealed that the existing feeders cannot handle the load to energize the new Mole Substation. Therefore, the existing cables must be replaced with new cables.

5) Grind off the word "Danger" from the manhole covers on all electrical manholes along the new duct bank that was installed as part of this contract. After the placement of the manhole covers, Electrical Maintenance requested that the word "Danger" be removed.

Payment for the Extra Work will be a Lump Sum of $55,721.25, which can be financed from the contingency fund. A detailed cost analysis was submitted by the Contractor, which was verified by the Engineer as reasonable. The cost analysis is in file at the Resident Engineer's office.

This change order has been discussed and concurred with Rene Fortaleza of Electrical Maintenance. Headquarters Issue and Approve was granted on 05/12/2010.

Adjustment of contract time is deferred pending completion of the work specified in this change as it may affect the controlling operation.

ADA Notice: For individuals with sensory disabilities, this document is available in alternate formats. For information call: (916) 654-6410 or TDD (916) 654-3880 or write Records and Forms Management, 1120 N Street, MS-89, Sacramento, CA 95814.

CONCURRED BY:		
Construction Engineer:	Ben Ghafghazi	Date 5/7/2010
Bridge Engineer:		Date
Project Engineer:		Date
Project Manager:		Date
FHWA Rep.:		Date
Environmental:		Date
Other (specify):	Rene Fontaleza Maintenance Electrical	Date 5/13/10
Other (specify):		Date
District Prior Approval By:		Date
HQ (Issue Approve) By:		Date
Resident Engineer's Signature:		Date 5/7/2010

ESTIMATE OF COST

	THIS REQUEST	TOTAL TO DATE
ITEMS	$0.00	$0.00
FORCE ACCOUNT	$0.00	$0.00
AGREED PRICE	$55,721.25	$240,739.75
ADJUSTMENT	$0.00	$0.00
TOTAL	$55,721.25	$240,739.75

FEDERAL PARTICIPATION

☐ PARTICIPATING ☐ PARTICIPATING IN PART ☑ NONE
☐ NON-PARTICIPATING (MAINTENANCE) ☐ NON-PARTICIPATING

FEDERAL SEGREGATION (if more than one Funding Source or P.I.P. type)
☑ CCO FUNDED PER CONTRACT ☐ CCO FUNDED AS FOLLOWS

FEDERAL FUNDING SOURCE	PERCENT

ADA Notice: For individuals with sensory disabilities, this document is available in alternate formats. For information call: (916) 654-6410 or TDD (916) 654-3880 or write Records and Forms Management, 1120 N Street, MS-89, Sacramento, CA 95814.

STATE OF CALIFORNIA - DEPARTMENT OF TRANSPORTATION

CONTRACT CHANGE ORDER

Change Requested by: Engineer

CCO: 139	Suppl. No. 1	Contract No. 04 - 0120L4	Road ALA-80-1.6/2.7	FED. AID LOC.: NO FED AID

To: **M C M CONSTRUCTION INC**

You are directed to make the following changes from the plans and specifications or do the following described work not included in the plans and specifications for this contract. ***NOTE: This change order is not effective until approved by the Engineer.***

Description of work to be done, estimate of quantities and prices to be paid. (Segregate between additional work at contract price, agreed price and force account.) Unless otherwise stated, rates for rental of equipment cover only such time as equipment is actually used and no allowance will be made for idle time. This last percentage shown is the net accumulated increase or decrease from the original quantity in the Engineer's Estimate.

Provide labor, equipment and materials for performing the electrical changes as described below. The work specified herein, and all work otherwise directed by the Engineer, shall be performed in accordance with Section 86 "SIGNALS, LIGHTING AND ELECTRICAL SYSTEMS" of the Standard Specifications, and Section 10-3.10 "CONDUCTORS, CABLE AND WIRING" of Special Provisions.

Extra Work at Lump Sum:

1) Provide a 10' extension ladder for manhole access.

2) Provide two ground jumper cables for de-energizing 15 kV cables.

3) Provide additional conduit information on the manhole markers provided in CCO 139, Supplement 0, and remove the word "Danger", for all manholes along the new duct bank that was installed as part of this contract.

4) Replace the existing 12.47 kV feeders from the old substation to the new Mole Substation.

5) Grind off the word "Danger" from the manhole covers on all electrical manholes along the new duct bank that was installed as part of this contract.

For this work, the contractor will be paid the sum of $55,721.25, this sum constitutes full compensation, including markups, for this change.

Estimated cost of Extra Work at Lump Sum $55,721.25

Consideration of a time adjustment will be deferred until completion of the work specified herein. Determination of a commensurate time extension will be made in accordance with Section 8-1.07, "Liquidated Damages", of the Standard Specifications.

Estimated Cost: Increase ☑ **Decrease** ☐ **$55,721.25**

By reason of this order the time of completion will be adjusted as follows: Deferred

Signature	**Resident Engineer** Ben Ghafghazi	**Date** 5/7/2010
Signature	**Construction Engineer** Ben Ghafghazi	**Date** 5/7/2010
Signature	**Construction Manager** Amer Bata	**Date** 5/28/10

We the undersigned contractor, have given careful consideration to the change proposed and agree, if this proposal is approved, that we will provide all equipment, furnish the materials, except as may otherwise be noted above, and perform all services necessary for the work above specified, and will accept as full payment therefor the prices shown above.

NOTE: If you, the contractor, do not sign acceptance of this order, your attention is directed to the requirements of the specifications as to proceeding with the ordered work and filing a written protest within the time therein specified.

Signature	**(Print name and title)** EDMUNDO A. PUCHI, TREASURER	**Date** 5/25/10

STATE OF CALIFORNIA - DEPARTMENT OF TRANSPORTATION

CONTRACT CHANGE ORDER MEMORANDUM

TO: AMER BATA / BEN GHAFGHAZI

FROM: BEN GHAFGHAZI

FILE: **E.A.** 04 - 0120L4
CO-RTE-PM ALA-80-1.6/2.7
FED. NO. NO FED AID

CCO#: **139** | SUPPLEMENT#: **2** | Category Code: **AFZZ** | CONTINGENCY BALANCE (incl. this change) **$1,866,527.40**

COST: **$0.00** INCREASE ☐ DECREASE ☐ HEADQUARTERS APPROVAL REQUIRED? ☑ YES ☐ NO

SUPPLEMENTAL FUNDS PROVIDED: **$0.00** IS THIS REQUEST IN ACCORDANCE WITH ENVIRONMENTAL DOCUMENTS? ☑ YES ☐ NO

CCO DESCRIPTION:
Time Adjustment of 0 Days

PROJECT DESCRIPTION:
Construct bridge, roadway, building and electrical system.

Original Contract Time:	Time Adj. This Change:	Previously Approved CCO Time Adjustments:	Percentage Time Adjusted: (including this change)	Total # of Unreconciled Deferred Time CCO(s): (including this change)
810 Day(s)	**0** Day(s)	**184** Day(s)	**23** %	**2**

THIS CHANGE ORDER PROVIDES FOR:
A time adjustment of 0 (zero) working days, in accordance with Section 8-1.07, "Liquidated Damages", of the Standard Specifications.

It has been determined that the work of Contract Change Order No. 139, Supplements #0 and #1, has had no impact on the contractor's controlling operation. Therefore, a time extension of 0 days is recommended.

Total Time Adjustment = 0 Days

CONCURRED BY:

Construction Engineer:	Ben Ghafghazi	Date 5/3/2010
Bridge Engineer:		Date
Project Engineer:		Date
Project Manager:		Date
FHWA Rep.:		Date
Environmental:		Date
Other (specify):		Date
Other (specify):		Date
District Prior Approval By:		Date
HQ (Issue Approve) By:		Date
Resident Engineer's Signature:		Date 5/3/2010

ESTIMATE OF COST

	THIS REQUEST	TOTAL TO DATE
ITEMS	$0.00	$0.00
FORCE ACCOUNT	$0.00	$0.00
AGREED PRICE	$0.00	$240,739.75
ADJUSTMENT	$0.00	$0.00
TOTAL	$0.00	$240,739.75

FEDERAL PARTICIPATION

☐ PARTICIPATING ☐ PARTICIPATING IN PART ☑ NONE
☐ NON-PARTICIPATING (MAINTENANCE) ☐ NON-PARTICIPATING

FEDERAL SEGREGATION (if more than one Funding Source or P.I.P. type)
☑ CCO FUNDED PER CONTRACT ☐ CCO FUNDED AS FOLLOWS

FEDERAL FUNDING SOURCE	PERCENT

ADA Notice: For individuals with sensory disabilities, this document is available in alternate formats. For information call: (916) 654-6410 or TDD (916) 654-3880 or write Records and Forms Management, 1120 N Street, MS-89, Sacramento, CA 95814.

STATE OF CALIFORNIA - DEPARTMENT OF TRANSPORTATION

CONTRACT CHANGE ORDER

Change Requested by: Engineer

CCO: 139	Suppl. No. 2	Contract No. 04 - 0120L4	Road ALA-80-1.6/2.7	FED. AID LOC.: NO FED AID

To: **M C M CONSTRUCTION INC**

You are directed to make the following changes from the plans and specifications or do the following described work not included in the plans and specifications for this contract. ***NOTE: This change order is not effective until approved by the Engineer.***

Description of work to be done, estimate of quantities and prices to be paid. (Segregate between additional work at contract price, agreed price and force account.) Unless otherwise stated, rates for rental of equipment cover only such time as equipment is actually used and no allowance will be made for idle time. This last percentage shown is the net accumulated increase or decrease from the original quantity in the Engineer's Estimate.

TIME ADJUSTMENT:

A determination of the delay in completion of the contract due to the work specified by Contract Change Order No. 139, Supplements #0 and #1, has been made in accordance with the provisions of Section 8-1.07 of the Standard Specifications.

Time Adjustment = 0 Days

Acceptance of this change order constitutes an agreement of full resolution of all time impact costs resulting from Change Order No. 139, Supplements #0 and #1.

This change order acts to resolve the deferred time issued on Change Order No. 139, Supplements #0 and #1, and no additional time shall be granted.

Estimated Cost: Increase ☐ **Decrease** ☐ **$0.00**

By reason of this order the time of completion will be adjusted as follows: 0 days

Signature	**Resident Engineer** Ben Ghafghazi	**Date** 5/3/2010
Signature	**Construction Manager** Amer Bata	**Date** 5/3/10
Signature	**Construction Manager** Amer Bata	**Date** 8/25/10

We the undersigned contractor, have given careful consideration to the change proposed and agree, if this proposal is approved, that we will provide all equipment, furnish the materials, except as may otherwise be noted above, and perform all services necessary for the work above specified, and will accept as full payment therefor the prices shown above.

NOTE: If you, the contractor, do not sign acceptance of this order, your attention is directed to the requirements of the specifications as to proceeding with the ordered work and filing a written protest within the time therein specified.

Signature	**(Print name and title)** COMUNDO A. PUCHI, TREASURER	**Date** 8/16/10

STATE OF CALIFORNIA - DEPARTMENT OF TRANSPORTATION

CONTRACT CHANGE ORDER

Change Requested by: Engineer

CCO: 140	Suppl. No. 0	Contract No. 04 - 0120L4	Road ALA-80-1.6/2.7	FED. AID LOC.: NO FED AID

To: **M C M CONSTRUCTION INC**

You are directed to make the following changes from the plans and specifications or do the following described work not included in the plans and specifications for this contract. ***NOTE: This change order is not effective until approved by the Engineer.***

Description of work to be done, estimate of quantities and prices to be paid. (Segregate between additional work at contract price, agreed price and force account.) Unless otherwise stated, rates for rental of equipment cover only such time as equipment is actually used and no allowance will be made for idle time. This last percentage shown is the net accumulated increase or decrease from the original quantity in the Engineer's Estimate.

Extra Work at Force Account:

Provide labor, equipment and materials to paint the exposed surface of the electrical conduit at the bike path. The paint color of this exposed conduit shall match that of the Skyway. Exact limits will be determined in the field by the Engineer. All work shall be performed in accordance with Section 10-1.76 "CLEAN AND PAINT STRUCTURAL STEEL" of the Special Provisions, and Section 59 "PAINTING" and Section 91 "PAINT" of the Standard Specifications.

Estimated cost of Extra Work at Force Account $20,000.00

Estimated Cost: Increase ☑ **Decrease** ☐ **$20,000.00**

By reason of this order the time of completion will be adjusted as follows: 0 days

Signature	**Resident Engineer** BEN GHAFGHAZI	**Date** 2/1/2010
Signature	**Construction Engineer** Ben Ghafghazi	**Date** 2/1/2010
Signature	**Construction Engineer** Ben Ghafghazi	**Date** 2/16/10

We the undersigned contractor, have given careful consideration to the change proposed and agree, if this proposal is approved, that we will provide all equipment, furnish the materials, except as may otherwise be noted above, and perform all services necessary for the work above specified, and will accept as full payment therefor the prices shown above.

NOTE: If you, the contractor, do not sign acceptance of this order, your attention is directed to the requirements of the specifications as to proceeding with the ordered work and filing a written protest within the time therein specified.

Signature	**(Print name and title)** EDMUNDO A. PUCHI, TREASURER	**Date** 2/11/10

STATE OF CALIFORNIA - DEPARTMENT OF TRANSPORTATION

CONTRACT CHANGE ORDER MEMORANDUM

DATE: 1/27/2010 Page 1 of 1

TO: AMER BATA / BEN GHAFGHAZI

FROM: BEN GHAFGHAZI

FILE: E.A. 04 - 0120L4
CO-RTE-PM ALA-80-1.6/2.7
FED. NO. NO FED AID

CCO#: 140 | SUPPLEMENT#: 0 | Category Code: CBPC

CONTINGENCY BALANCE (incl. this change) $3,309,105.40

COST: $20,000.00 INCREASE ☑ DECREASE ☐

HEADQUARTERS APPROVAL REQUIRED? ☐ YES ☑ NO

SUPPLEMENTAL FUNDS PROVIDED: $0.00

IS THIS REQUEST IN ACCORDANCE WITH ENVIRONMENTAL DOCUMENTS? ☑ YES ☐ NO

CCO DESCRIPTION:
Paint electrical conduits at bike path

PROJECT DESCRIPTION:
Construct bridge, roadway, building and electrical system.

Original Contract Time:	Time Adj. This Change:	Previously Approved CCO Time Adjustments:	Percentage Time Adjusted: (including this change)	Total # of Unreconciled Deferred Time CCO(s): (including this change)
810 Day(s)	0 Day(s)	0 Day(s)	0 %	0

THIS CHANGE ORDER PROVIDES FOR:

Painting of the exposed surface of the electrical conduit at the bike path, in a color that matches the conduit from the Skyway's bike path. This work shall be done in accordance with Section 10-1.76 "CLEAN AND PAINT STRUCTURAL STEEL" of the Special Provisions, and Section 59 "PAINTING" and Section 91 "PAINT" of the Standard Specifications.

This change is necessary to provide consistency between the Skyway's bike path and that of Oakland Touchdown. Painting of the exposed conduits at the Oakland Touchdown's bike path is currently not specified in the contract documents and is not covered by any contract items.

Payment for this work will be at Extra Work at Force Account for an estimated cost of $20,000.00, which can be financed from the contingency fund. A detailed Force Account analysis is on file at the Resident Engineer's office.

This change has been requested by Jaime Gutierrez of Project Development and discussed and concurred with Clive Endress of Landscape Architecture.

No adjustment of contract time is warranted as this change does not affect the controlling operation.

CONCURRED BY:

Construction Engineer:	Ben Ghafghazi	Date 2/1/2010
Bridge Engineer:		Date
Project Engineer:	Jaime Gutierrez	Date 1/26/10
Project Manager:		Date
FHWA Rep.:		Date
Environmental:		Date
Other (specify):	Phil Harsono, Maintenance	Date 03/03/10*
Other (specify):		Date
District Prior Approval By:		Date
HQ (Issue Approve) By:		Date
Resident Engineer's Signature:		Date 2/1/2010

ESTIMATE OF COST

	THIS REQUEST	TOTAL TO DATE
ITEMS	$0.00	$0.00
FORCE ACCOUNT	$20,000.00	$20,000.00
AGREED PRICE	$0.00	$0.00
ADJUSTMENT	$0.00	$0.00
TOTAL	$20,000.00	$20,000.00

FEDERAL PARTICIPATION

☐ PARTICIPATING ☐ PARTICIPATING IN PART ☑ NONE
☐ NON-PARTICIPATING (MAINTENANCE) ☐ NON-PARTICIPATING

FEDERAL SEGREGATION (if more than one Funding Source or P.I.P. type)
☑ CCO FUNDED PER CONTRACT ☐ CCO FUNDED AS FOLLOWS

FEDERAL FUNDING SOURCE	PERCENT

* Jonathan provided over the phone.

ADA Notice: For individuals with sensory disabilities, this document is available in alternate formats. For information call: (916) 654-6410 or TDD (916) 654-3880 or write Records and Forms Management, 1120 N Street, MS-89, Sacramento, CA 95814.

CONTRACT CHANGE ORDER

Change Requested by:

CCO: 141	Suppl. No. 0	Contract No. 04 - 0120L4	Road ALA-80-1.6/2.7	FED. AID LOC.: NO FED AID

To: **M C M CONSTRUCTION INC**

You are directed to make the following changes from the plans and specifications or do the following described work not included in the plans and specifications for this contract. ***NOTE: This change order is not effective until approved by the Engineer.***

Description of work to be done, estimate of quantities and prices to be paid. (Segregate between additional work at contract price, agreed price and force account.) Unless otherwise stated, rates for rental of equipment cover only such time as equipment is actually used and no allowance will be made for idle time. This last percentage shown is the net accumulated increase or decrease from the original quantity in the Engineer's Estimate.

Extra Work at Force Account:

As shown on sheets 2 of 3 and 3 of 3 of this CCO, furnish and install metal grating to bridge the soffit gaps between Skyway and Oakland Touchdown structures at Hinge EE and EW. All work shall be done in accordance with Section 10-1.92 "MISCELLANEOUS METAL (BRIDGE)" of the Special Provisions.

Estimated cost of Extra Work at Force Account $50,000.00

Estimated Cost: Increase ☑ **Decrease** ☐ **$50,000.00**

By reason of this order the time of completion will be adjusted as follows: 0 days

Signature	**Resident Engineer** BEN GHAFGHAZI	**Date** 2/23/2010
Signature	**Construction Engineer** Ben Ghafghazi	**Date** 2/23/2010
Signature	**Construction Engineer** Ben Ghafghazi	**Date** 5/17/2010

We the undersigned contractor, have given careful consideration to the change proposed and agree, if this proposal is approved, that we will provide all equipment, furnish the materials, except as may otherwise be noted above, and perform all services necessary for the work above specified, and will accept as full payment therefor the prices shown above.

NOTE: If you, the contractor, do not sign acceptance of this order, your attention is directed to the requirements of the specifications as to proceeding with the ordered work and filing a written protest within the time therein specified.

Signature	**(Print name and title)** EDMUNDO A. PUCHI, TREASURER	**Date** 6/5/10

STATE OF CALIFORNIA - DEPARTMENT OF TRANSPORTATION

CONTRACT CHANGE ORDER MEMORANDUM

DATE: 2/18/2010 Page 1 of 1

AMER BATA / BEN GHAFGHAZI	FILE: E.A. 04 - 0120L4
FROM: BEN GHAFGHAZI	CO-RTE-PM ALA-80-1.6/2.7
	FED. NO. NO FED AID
CCO#: 141 SUPPLEMENT#: 0 Category Code: CHPT	CONTINGENCY BALANCE (incl. this change) $3,107,658.40
COST: $50,000.00 INCREASE ☑ DECREASE ☐	HEADQUARTERS APPROVAL REQUIRED? ☐ YES ☑ NO
SUPPLEMENTAL FUNDS PROVIDED: $0.00	IS THIS REQUEST IN ACCORDANCE WITH ENVIRONMENTAL DOCUMENTS? ☑ YES ☐ NO
CCO DESCRIPTION: Hinges EW and EE Metal Grindings	**PROJECT DESCRIPTION:** Construct bridge, roadway, building and electrical system.

Original Contract Time:	Time Adj. This Change:	Previously Approved CCO Time Adjustments:	Percentage Time Adjusted: (including this change)	Total # of Unreconciled Deferred Time CCO(s): (including this change)
810 Day(s)	0 Day(s)	184 Day(s)	23 %	15

THIS CHANGE ORDER PROVIDES FOR:

Compensating the contractor for furnishing and installing expanded metal gratings to bridge the +/- 600 mm soffit gaps between Skyway and Oakland Touchdown structures at Hinge EE and Hinge EW.

This change is necessary to address safety issues with leaving the soffit gap open between the Skyway and Oakland Touchdown structures. Seismic joint was originally called for at this location, but was deleted as part of CCO 9 of this project. Seismic joints will be installed as part of the OTD2 project, but the gap needs to be bridged to provide safe access for maintenance and other construction crews. Therefore, it is proposed that expanded metal gratings to be installed at bridge soffit openings.

Payment for this work will be at Extra Work at Force Account for an estimated cost of $50,000, which can be financed from the contingency fund.

No adjustment of contract time is warranted for this change, as it does not impact the controlling operation.

CONCURRED BY:		
Construction Engineer:	Ben Ghafghazi	Date 2/23/2010
Bridge Engineer:	Hazzaa El-Mahmoud	Date 2/2/10
Project Engineer:		Date
Project Manager:		Date
FHWA Rep.:		Date
Environmental:		Date
Other (specify):		Date
Other (specify):		Date
District Prior Approval By:		Date
HQ (Issue Approve) By:		Date
Resident Engineer's Signature:		Date 2/23/2010

ESTIMATE OF COST

	THIS REQUEST	TOTAL TO DATE
ITEMS	$0.00	$0.00
FORCE ACCOUNT	$50,000.00	$50,000.00
AGREED PRICE	$0.00	$0.00
ADJUSTMENT	$0.00	$0.00
TOTAL	$50,000.00	$50,000.00

FEDERAL PARTICIPATION

☐ PARTICIPATING ☐ PARTICIPATING IN PART ☐ NONE
☐ NON-PARTICIPATING (MAINTENANCE) ☐ NON-PARTICIPATING

FEDERAL SEGREGATION (if more than one Funding Source or P.I.P. type)
☐ CCO FUNDED PER CONTRACT ☐ CCO FUNDED AS FOLLOWS

FEDERAL FUNDING SOURCE	PERCENT

ADA Notice: For individuals with sensory disabilities, this document is available in alternate formats. For information call: (916) 654-6410 or TDD (916) 654-3880 or write Records and Forms Management, 1120 N Street, MS-89, Sacramento, CA 95814.

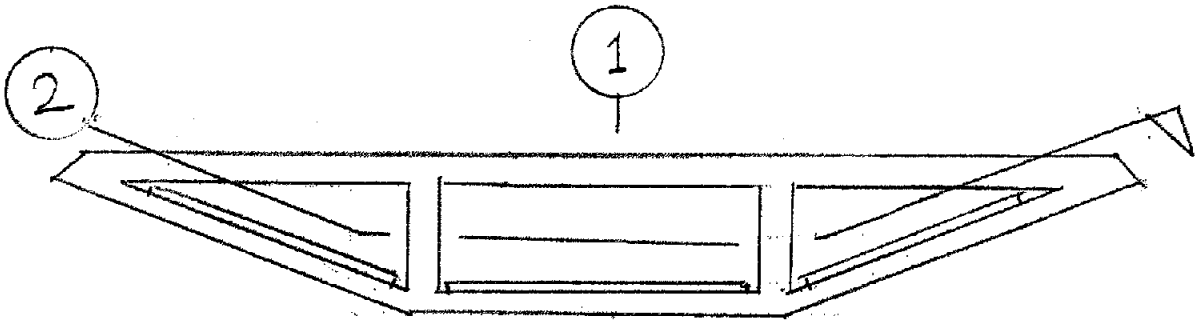

HINGES EW & EE

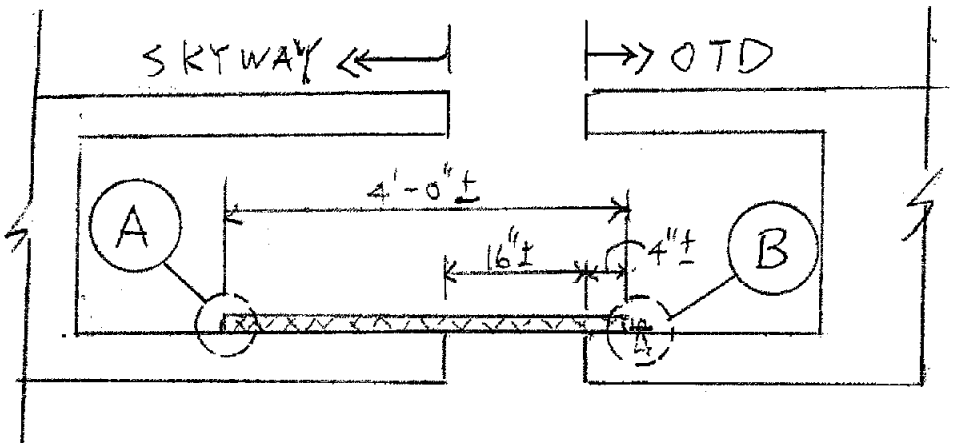

1

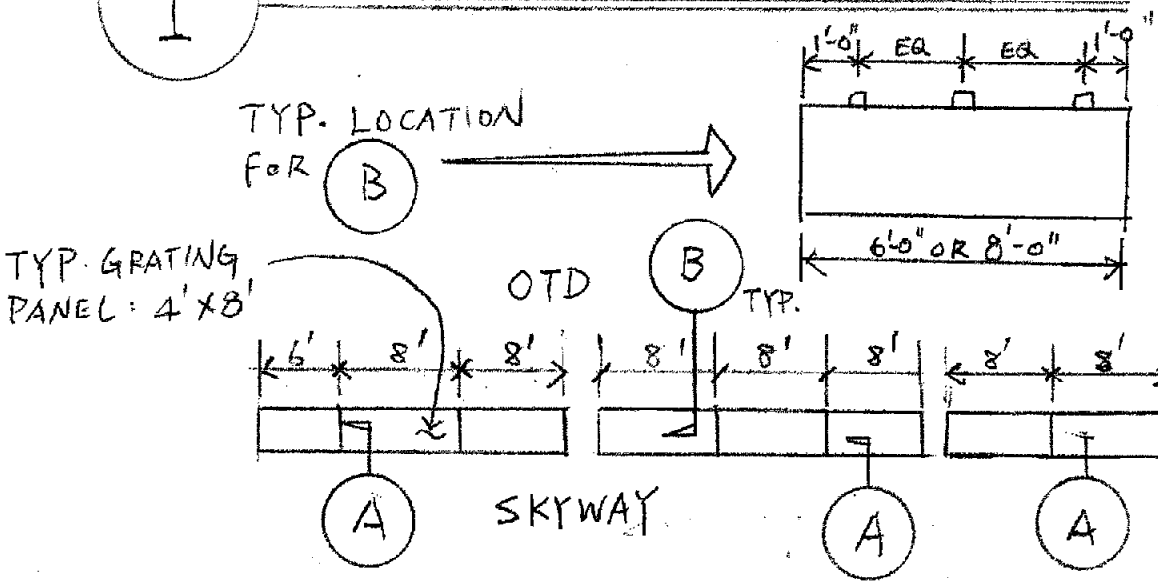

2

CONTRACT EA 04-012014

CCO NO. 141

SHEET 2 OF 3

CONTRACTOR MCM

RE B. GHAFGHAZI

REGISTERED PROFESSIONAL ENGINEER
RICHARD T. CHANG
No 31534
EXP. 12/31/2010
CIVIL
STATE OF CALIFORNIA

3/3/2010

Richard T. Chang

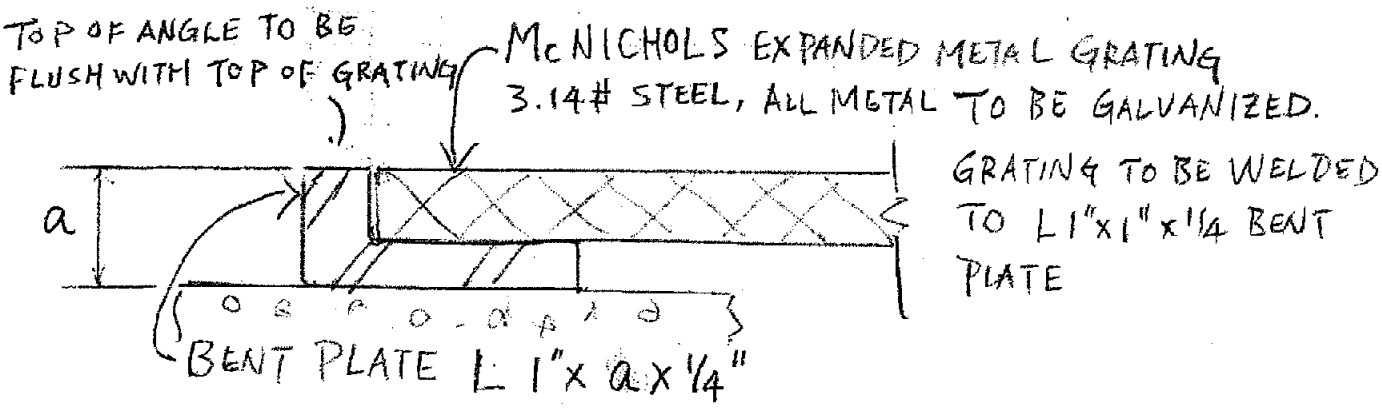

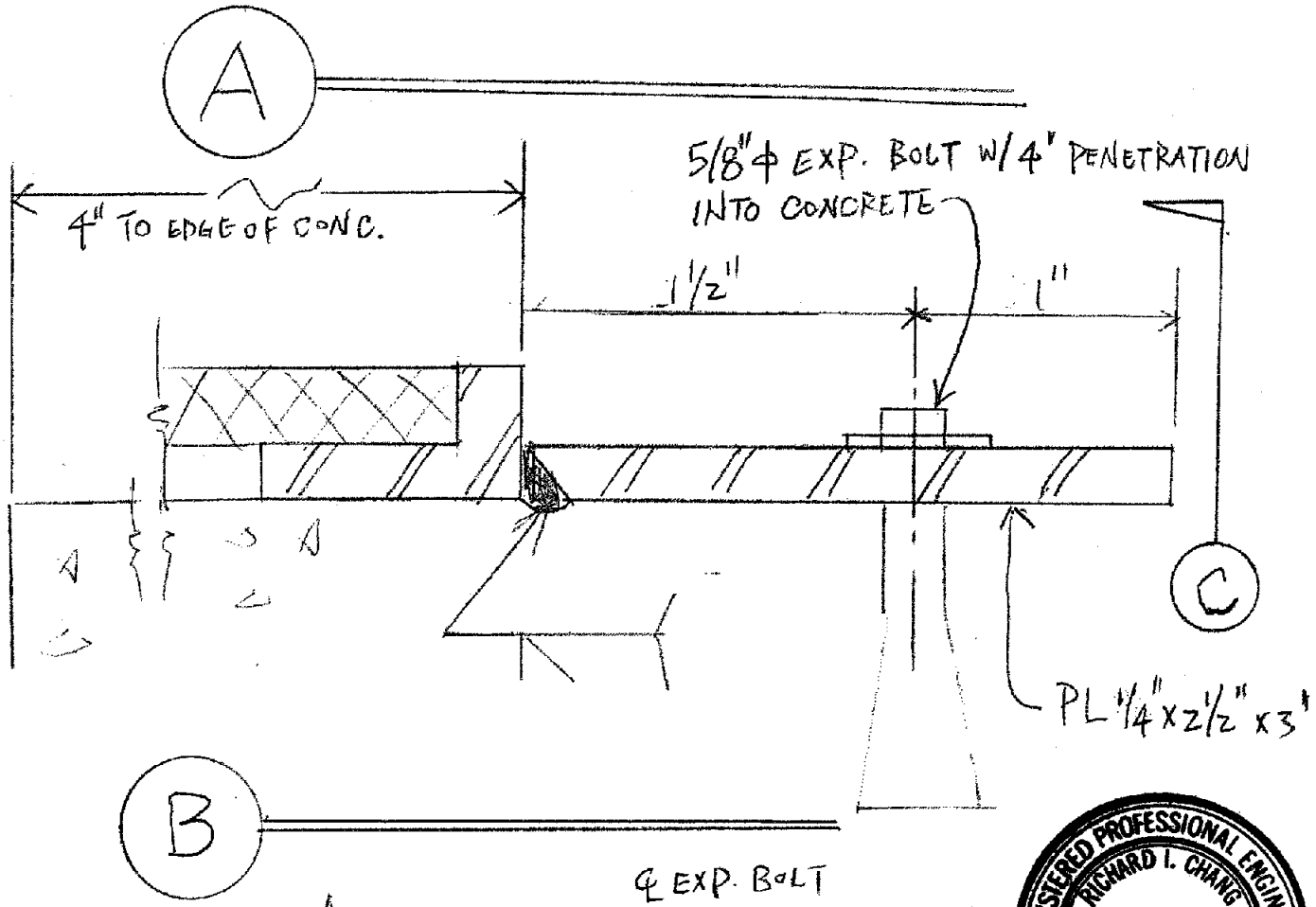

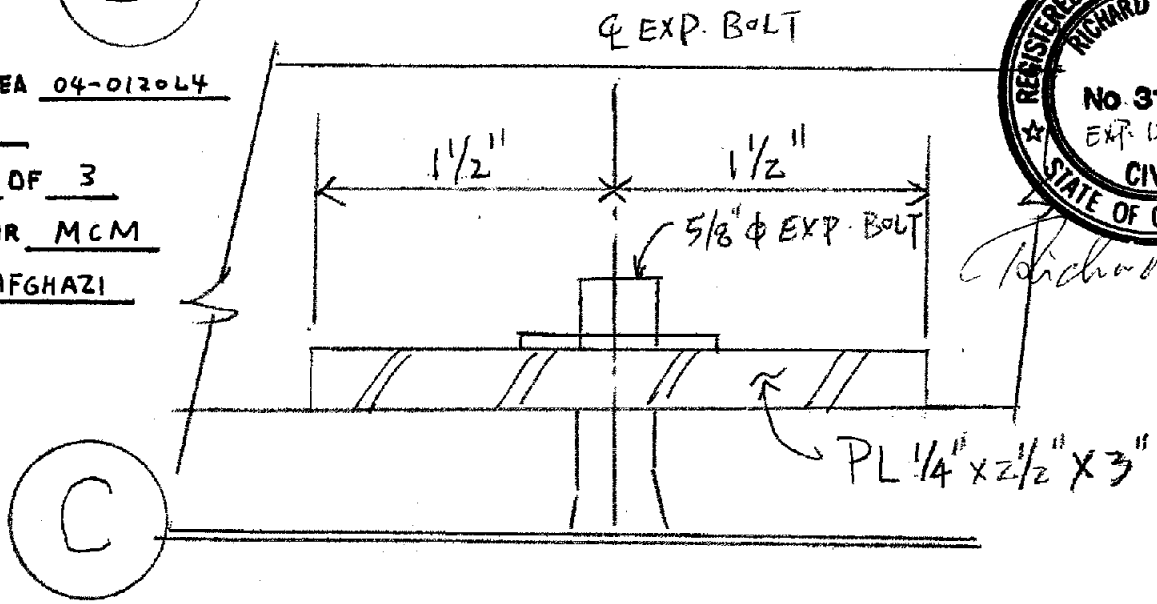

CONTRACT EA 04-012064
CCO 141
SHEET 3 OF 3
CONTRACTOR MCM
RE B. GHAFGHAZI

REGISTERED PROFESSIONAL ENGINEER
RICHARD I. CHANG
No. 31534
EXP. 12/31/2010
CIVIL
STATE OF CALIFORNIA

Richard I. Chang 3/3/2010

STATE OF CALIFORNIA - DEPARTMENT OF TRANSPORTATION

CONTRACT CHANGE ORDER

Change Requested by: Engineer

CCO: 143	Suppl. No. 0	Contract No. 04 - 0120L4	Road ALA-80-1.6/2.7	FED. AID LOC.: NO FED AID

To: **M C M CONSTRUCTION INC**

You are directed to make the following changes from the plans and specifications or do the following described work not included in the plans and specifications for this contract. ***NOTE: This change order is not effective until approved by the Engineer.***

Description of work to be done, estimate of quantities and prices to be paid. (Segregate between additional work at contract price, agreed price and force account.) Unless otherwise stated, rates for rental of equipment cover only such time as equipment is actually used and no allowance will be made for idle time. This last percentage shown is the net accumulated increase or decrease from the original quantity in the Engineer's Estimate.

Extra Work at Force Account:

Provide labor, equipment and material for removing the concrete pad for the air receiver unit, and for modifying the air receiver stand to make room for the air receiver unit. All work shall be done in accordance with Section 12-15 "MECHANICAL" of the Special Provisions.

Estimated cost of Extra Work at Force Account $7,500.00

Estimated Cost: Increase ☑ **Decrease** ☐ **$7,500.00**

By reason of this order the time of completion will be adjusted as follows: 0 days

Signature	**Resident Engineer** BEN GHAFGHAZI	**Date** 2/23/2010
Signature	**Construction Engineer** Ben Ghafghazi	**Date** 2/23/2010
Signature	**Construction Engineer** Ben Ghafghazi	**Date** 3/15/2010

We the undersigned contractor, have given careful consideration to the change proposed and agree, if this proposal is approved, that we will provide all equipment, furnish the materials, except as may otherwise be noted above, and perform all services necessary for the work above specified, and will accept as full payment therefor the prices shown above.

NOTE: If you, the contractor, do not sign acceptance of this order, your attention is directed to the requirements of the specifications as to proceeding with the ordered work and filing a written protest within the time therein specified.

Signature	**(Print name and title)** EDMUNDO A. PUCHI, TREASURER	**Date** 3/2/10

STATE OF CALIFORNIA - DEPARTMENT OF TRANSPORTATION

CONTRACT CHANGE ORDER MEMORANDUM

DATE: 2/23/2010 Page 1 of 1

TO: AMER BATA / BEN GHAFGHAZI

FROM: BEN GHAFGHAZI

FILE: E.A. 04 - 0120L4
CO-RTE-PM ALA-80-1.6/2.7
FED. NO. NO FED AID

CCO#: 143 SUPPLEMENT#: 0 Category Code: CAPMA

CONTINGENCY BALANCE (incl. this change) $3,081,366.40

COST: $7,500.00 INCREASE ☑ DECREASE ☐

HEADQUARTERS APPROVAL REQUIRED? ☐ YES ☑ NO

SUPPLEMENTAL FUNDS PROVIDED: $0.00

IS THIS REQUEST IN ACCORDANCE WITH ENVIRONMENTAL DOCUMENTS? ☑ YES ☐ NO

CCO DESCRIPTION:
Mole Substation Receiver Modification

PROJECT DESCRIPTION:
Construct bridge, roadway, building and electrical system.

Original Contract Time:	Time Adj. This Change:	Previously Approved CCO Time Adjustments:	Percentage Time Adjusted: (including this change)	Total # of Unreconciled Deferred Time CCO(s): (including this change)
810 Day(s)	0 Day(s)	184 Day(s)	23 %	15

THIS CHANGE ORDER PROVIDES FOR:
Compensating the contractor for the removal of concrete equipment pad inside the Mole Substation and modifying the air receiver stand.

This change is necessary because the air receiver unit does not fit within the dimensions provided in the contract plans. The designer had requested that a concrete pad be provided for the air receiver unit per Note #3 on Sheet 617 of 643 of the contract plans, but it was determined that the height of the equipment added by the pad exceeds the height of the room. Since the contractor had already installed the concrete pad, it is hereby proposed to compensate the contractor for the cost of its removal and for the necessary modifications to the equipment stand.

This change has been requested by the Engineer.

Payment for this work will be at Extra Work at Force Account for an estimated cost of $7,500.00, which can be financed from the contingency fund.

No adjustment of contract time is warranted as this change does not affect the controlling operation.

Maintenance Concurrence is not required as this change isn't adding anything to the Building.

CONCURRED BY:

Construction Engineer:	Ben Ghafghazi	Date 3/17/2010
Bridge Engineer:		Date
Project Engineer:		Date
Project Manager:		Date
FHWA Rep.:		Date
Environmental:		Date
Other (specify):	Amer Bata, Const. Manager	Date 2/23/10
Other (specify):		Date
District Prior Approval By:		Date
HQ (Issue Approve) By:		Date
Resident Engineer's Signature:		Date 3/17/2010

ESTIMATE OF COST

	THIS REQUEST	TOTAL TO DATE
ITEMS	$0.00	$0.00
FORCE ACCOUNT	$7,500.00	$7,500.00
AGREED PRICE	$0.00	$0.00
ADJUSTMENT	$0.00	$0.00
TOTAL	$7,500.00	$7,500.00

FEDERAL PARTICIPATION

☐ PARTICIPATING ☐ PARTICIPATING IN PART ☑ NONE
☐ NON-PARTICIPATING (MAINTENANCE) ☐ NON-PARTICIPATING

FEDERAL SEGREGATION (if more than one Funding Source or P.I.P. type)
☑ CCO FUNDED PER CONTRACT ☐ CCO FUNDED AS FOLLOWS

FEDERAL FUNDING SOURCE	PERCENT

ADA Notice: For individuals with sensory disabilities, this document is available in alternate formats. For information call: (916) 654-6410 or TDD (916) 654-3880 or write Records and Forms Management, 1120 N Street, MS-89, Sacramento, CA 95814.

STATE OF CALIFORNIA - DEPARTMENT OF TRANSPORTATION

CONTRACT CHANGE ORDER

Change Requested by: Engineer

CCO: 144	Suppl. No. 0	Contract No. 04 - 0120L4	Road ALA-80-1.6/2.7	FED. AID LOC.: NO FED AID

To: **M C M CONSTRUCTION INC**

You are directed to make the following changes from the plans and specifications or do the following described work not included in the plans and specifications for this contract. ***NOTE: This change order is not effective until approved by the Engineer.***

Description of work to be done, estimate of quantities and prices to be paid. (Segregate between additional work at contract price, agreed price and force account.) Unless otherwise stated, rates for rental of equipment cover only such time as equipment is actually used and no allowance will be made for idle time. This last percentage shown is the net accumulated increase or decrease from the original quantity in the Engineer's Estimate.

Extra Work at Force Account:

Provide labor, equipment and materials to ream bolt holes in the anchor plates of service platforms 18L, 21L and 18R, to align these holes with the anchor bolts shown in Contract Plan Sheet 345R1 of 643. For the anchor bolts, provide custom washers as directed by the Engineer. Also, extend the posts of the handrails into the post sleeves of service platforms 18L and 21L by welding additional hand rail material.

Estimated cost of Extra Work at Force Account $20,000.00

Estimated Cost: Increase ☑ Decrease ☐ **$20,000.00**

By reason of this order the time of completion will be adjusted as follows: 0 days

Submitted by

Signature	Resident Engineer Ben Ghafghazi	Date 4/26/2010

Approval Recommended by

Signature	Construction Engineer Ben Ghafghazi	Date 4/26/2010

Engineer Approval by

Signature	Construction Engineer Ben Ghafghazi	Date 5/17/2010

We the undersigned contractor, have given careful consideration to the change proposed and agree, if this proposal is approved, that we will provide all equipm furnish the materials, except as may otherwise be noted above, and perform all services necessary for the work above specified, and will accept as full paymer therefor the prices shown above.

NOTE: If you, the contractor, do not sign acceptance of this order, your attention is directed to the requirements of the specifications as to proceeding with the ordered work and filing a written protest within the time therein specified.

Contractor Acceptance by

Signature	(Print name and title) JAMES A. CARTER, PRESIDENT	Date 5/10/10

DIST	COUNTY	ROUTE	KILOMETER POST TOTAL PROJECT	SHEET No	TOTAL SHEETS
04	ALA	80	1.6/2.7	345R1	643

Gregory Bedkovich 4/21/08
REGISTERED CIVIL ENGINEER

PLANS APPROVAL DATE

Gregory Bedkovich No. C40516 Exp. 3/31/09 CIVIL STATE OF CALIFORNIA REGISTERED PROFESSIONAL ENGINEER

The State of California or its officers or agents shall not be responsible for the accuracy or completeness of electronic copies of this plan sheet.

Parsons Brinckerhoff Quade & Douglas, Inc.
303 Second Street, Suite 700N
San Francisco, CA 94107

Caltrans now has a web site! To get to the web site, go to: http://www.dot.ca.gov

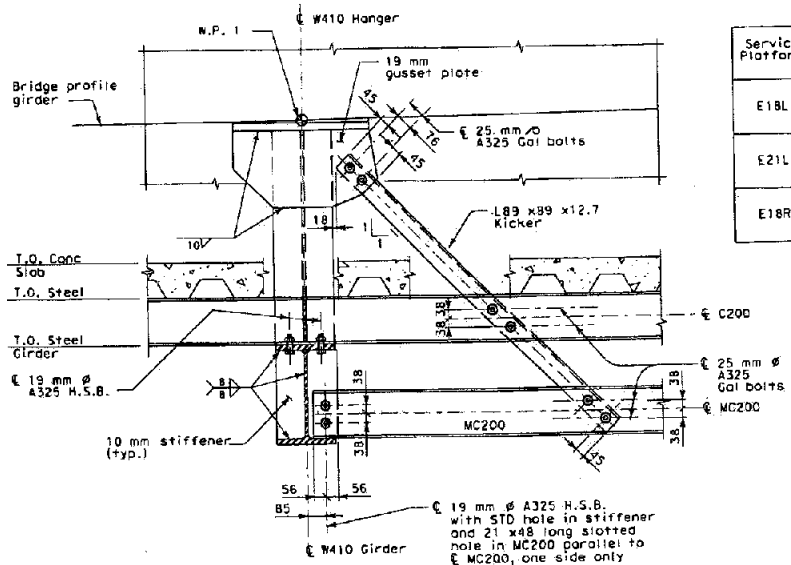

A 348R1 SECTION
SCALE: 1:10

DIMENSION TABLE

Service Platform	Service Platform Center Line Station	Girder Designation	Angle " " see note 4	Dimension Y1 see note 4	Dimension Y2 see note 4	Remarks
E18L	"W" 84+03	G1	12°22'00" ±	918±	4810±	
		G2	12°18'00" ±	842±	4810±	
E21L	"W" 85+55	G1	11°0'0" ±	931±	4045±	
		G2	11°0'00" ±	853±	4045±	
E18R	"E" 83+73.686	G1	11°22'00" ±	912±	4810±	
		G2	11°14'00" ±	835±	4810±	

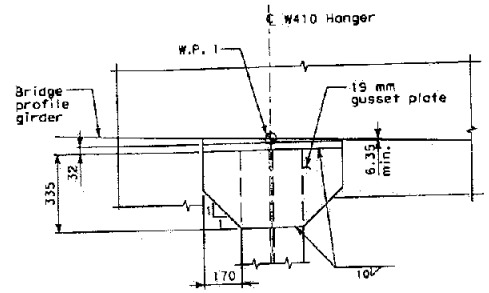

C 348R1 SECTION
SCALE: 1:10

NOTES:

1. The contractor shall verify all controlling field dimensions before ordering or fabricating any material.
2. For locations of platform, see electrical sheets.
3. For structural notes, see "General Structural Notes" sheet 340R1.
4. Angle and dimensions Y1 & Y2 are based on dimensions as designed, shown for information only and subject to field verification by the contractor.

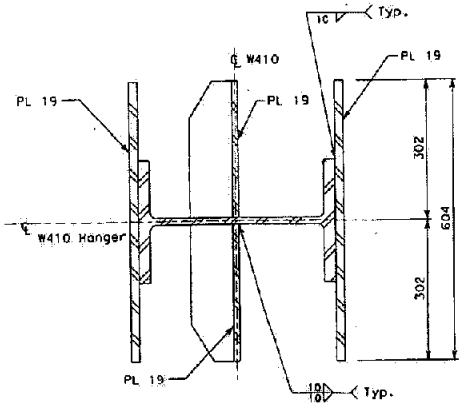

E 348R1 SECTION
SCALE: 1:5

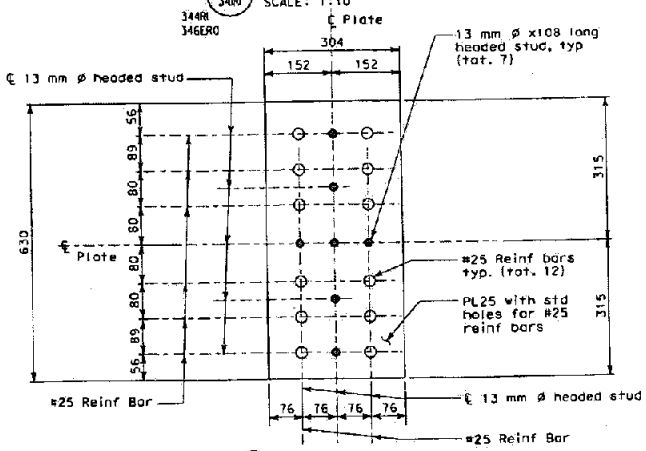

B 348R1 SECTION
SCALE: 1:5

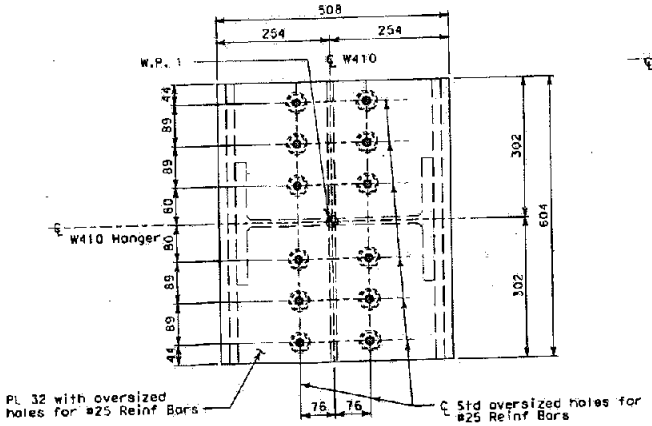

D 348R1 SECTION
SCALE: 1:5

ORIGINAL SHEET SUPERCEDED

MARK	DATE	DESCRIPTIONS	BY	CH'D	CCOM
		REVISIONS			

CONTRACT CHANGE ORDER NO. 57
SHEET 19 OF 25
04-012014

ALL DIMENSIONS ARE IN MILLIMETERS UNLESS OTHERWISE SHOWN

BERNARD CHAN
DESIGN OVERSIGHT
SIGN OFF DATE

DESIGN	BY G. Benkovich	CHECKED M.S. Dwyong	
DETAILS	BY O. Kurnovskaya	CHECKED G. Benkovich	
QUANTITIES	BY G. Benkovich	CHECKED M.S. Dwyong	

PREPARED FOR THE STATE OF CALIFORNIA DEPARTMENT OF TRANSPORTATION

Mark Gradzki
PROJECT ENGINEER

BRIDGE NO. 34-0006 L/R
KILOMETER POST 1.6

CU 04251
EA 0120L1

OAKLAND TOUCHDOWN
SERVICE PLATFORMS
SECTIONS

REVISION DATES (PRELIMINARY STAGE ONLY)
SHEET NO.

ORIGINAL SCALE IN MILLIMETERS FOR REDUCED PLANS 0 10 20 30 40 50 60 70 80 90 100

FILE => T:\13103\MS\pae\OTD-Contract 1\CCO\CCO Service Platforms - Struct\34-0006-u-misc010S.dgn

DESIGN DETAIL SHEET (METRIC) REV. 3/1/98

USERNAME => rdyo81 DATE PLOTTED => 4/23/2013 TIME PLOTTED => 5/22/2008

STATE OF CALIFORNIA - DEPARTMENT OF TRANSPORTATION

CONTRACT CHANGE ORDER MEMORANDUM

DATE: 4/19/2010 Page 1 of 1

TO: AMER BATA / BEN GHAFGHAZI

FROM: BEN GHAFGHAZI

FILE: **E.A.** 04 - 0120L4
CO-RTE-PM ALA-80-1.6/2.7
FED. NO. NO FED AID

CCO#: **144** SUPPLEMENT#: **0** Category Code: **CHPT**

CONTINGENCY BALANCE (incl. this change) **$1,954,508.40**

COST: **$20,000.00** INCREASE ☑ DECREASE ☐

HEADQUARTERS APPROVAL REQUIRED? ☐ YES ☑ NO

SUPPLEMENTAL FUNDS PROVIDED: **$0.00**

IS THIS REQUEST IN ACCORDANCE WITH ENVIRONMENTAL DOCUMENTS? ☑ YES ☐ NO

CCO DESCRIPTION:
Ream Bolt Holes at Service Platforms

PROJECT DESCRIPTION:
Construct bridge, roadway, building and electrical system.

Original Contract Time:	Time Adj. This Change:	Previously Approved CCO Time Adjustments:	Percentage Time Adjusted: (including this change)	Total # of Unreconciled Deferred Time CCO(s): (including this change)
810 Day(s)	**0** Day(s)	**184** Day(s)	**23** %	**8**

THIS CHANGE ORDER PROVIDES FOR:

Reaming anchor bolt holes in the anchor plates of service platforms 18L, 21L and 18R, and use custom washers as directed by the Engineer. Extend the handrails posts into the post sleeves of service platforms 18L and 21L by welding additional hand rail material.

This change is necessary because the anchor bolt holes in the anchor plates shown in the Contract Plan Sheet 345R1 of 643 do not align with the anchor bolts. These holes must be reamed to align with anchor bolts. In total there are 72 holes - with 24 anchor bolt holes per service platform. Also, hand rails at the west side of service platforms 18L and 21L cannot be lowered into the post sleeves because of their conflict with the bridge structure. This requires hand rail posts to be extended into the hand rail sleeves, by welding additional hand rail material as shown in Contract Plan Sheet 343R1 of 643.

The payment method for the work of this change order will be Extra Work at Force Account at an estimated cost of $20,000.00, which can be financed from the contingency fund.

Maintenance concurrence is not necessary, since this change does not affect maintenance operations.

No adjustment of contract time is warranted as this change does not affect the controlling operation.

CONCURRED BY:

Construction Engineer:	Ben Ghafghazi	Date 4/26/2010
Bridge Engineer:	* Mehran	Date 5/19/10
Project Engineer:		Date
Project Manager:		Date
FHWA Rep.:		Date
Environmental:		Date
Other (specify):		Date
Other (specify):		Date
District Prior Approval By:		Date
HQ (Issue Approve) By:		Date
Resident Engineer's Signature:		Date 4/26/2010

ESTIMATE OF COST

	THIS REQUEST	TOTAL TO DATE
ITEMS	$0.00	$0.00
FORCE ACCOUNT	$20,000.00	$20,000.00
AGREED PRICE	$0.00	$0.00
ADJUSTMENT	$0.00	$0.00
TOTAL	$20,000.00	$20,000.00

FEDERAL PARTICIPATION

☐ PARTICIPATING ☐ PARTICIPATING IN PART ☑ NONE
☐ NON-PARTICIPATING (MAINTENANCE) ☐ NON-PARTICIPATING

FEDERAL SEGREGATION (if more than one Funding Source or P.I.P. type)
☑ CCO FUNDED PER CONTRACT ☐ CCO FUNDED AS FOLLOWS

FEDERAL FUNDING SOURCE	PERCENT

* Got over phone from Jonathan Tco. 5/19/10

ADA Notice: For individuals with sensory disabilities, this document is available in alternate formats. For information call: (916) 654-6410 or TDD (916) 654-3880 or write Records and Forms Management, 1120 N Street, MS-89, Sacramento, CA 95814.

STATE OF CALIFORNIA - DEPARTMENT OF TRANSPORTATION

CONTRACT CHANGE ORDER MEMORANDUM

DATE: 6/8/2010 Page 1 of 1

TO: AMER BATA / BEN GHAFGHAZI

FROM: BEN GHAFGHAZI

FILE: **E.A.** 04 - 0120L4
CO-RTE-PM ALA-80-1.6/2.7
FED. NO. NO FED AID

CCO#: **144** SUPPLEMENT#: **1** Category Code: **CHPT**

CONTINGENCY BALANCE (incl. this change) **$1,440,547.90**

COST: **$30,000.00** INCREASE ☑ DECREASE ☐

HEADQUARTERS APPROVAL REQUIRED? ☐ YES ☑ NO

SUPPLEMENTAL FUNDS PROVIDED: **$0.00**

IS THIS REQUEST IN ACCORDANCE WITH ENVIRONMENTAL DOCUMENTS? ☑ YES ☐ NO

CCO DESCRIPTION:
Additional Funds

PROJECT DESCRIPTION:
Construct bridge, roadway, building and electrical system.

Original Contract Time:	Time Adj. This Change:	Previously Approved CCO Time Adjustments:	Percentage Time Adjusted: (including this change)	Total # of Unreconciled Deferred Time CCO(s): (including this change)
810 Day(s)	**0** Day(s)	**184** Day(s)	**23** %	**0**

THIS CHANGE ORDER PROVIDES FOR:

Additional funds for reaming anchor bolt holes in the anchor plates of service platforms 18L, 21L and 18R, and use custom washers as directed by the Engineer. Extend the handrails posts into the post sleeves of service platforms 18L and 21L by welding additional hand rail material.

CCO No. 144, Supplement 0 was written to ream the anchor bolt holes that do not align with the anchor bolts (due to an incorrect dimension shown in the Contract Plan Sheet 345R1 of 643), and extend hand rails at the west side of platforms 18L and 21L that could not fit into the post sleeves due to conflict with the bridge structure. It has now been determined that the cost of this work has exceeded the originally estimated amount of $20,000, and that an additional $30,000 is necessary.

The payment method for the work of this change order will be Extra Work at Force Account at an estimated cost of $30,000.00, which can be financed from the contingency fund.

Design and maintenance concurrences are not necessary, since this change only provides for additional funds. Hazzaa El-Mahmoud, Senior Bridge Engineer, concurs with this change order.

No adjustment of contract time is warranted as this change does not affect the controlling operation.

CONCURRED BY:

Construction Engineer:	Ben Ghafghazi	Date 6/8/2010
Bridge Engineer:	Hazzaa El-Mahmoud	Date 6/8/10
Project Engineer:		Date
Project Manager:		Date
FHWA Rep.:		Date
Environmental:		Date
Other (specify):		Date
Other (specify):		Date
District Prior Approval By:		Date
HQ (Issue Approve) By:		Date
Resident Engineer's Signature:		Date 6/8/2010

ESTIMATE OF COST

	THIS REQUEST	TOTAL TO DATE
ITEMS	$0.00	$0.00
FORCE ACCOUNT	$30,000.00	$50,000.00
AGREED PRICE	$0.00	$0.00
ADJUSTMENT	$0.00	$0.00
TOTAL	$30,000.00	$50,000.00

FEDERAL PARTICIPATION

☐ PARTICIPATING ☐ PARTICIPATING IN PART ☑ NONE
☐ NON-PARTICIPATING (MAINTENANCE) ☐ NON-PARTICIPATING

FEDERAL SEGREGATION (if more than one Funding Source or P.I.P. type)
☑ CCO FUNDED PER CONTRACT ☐ CCO FUNDED AS FOLLOWS

FEDERAL FUNDING SOURCE	PERCENT

ADA Notice: For individuals with sensory disabilities, this document is available in alternate formats. For information call: (916) 654-6410 or TDD (916) 654-3880 or write Records and Forms Management, 1120 N Street, MS-89, Sacramento, CA 95814.

STATE OF CALIFORNIA - DEPARTMENT OF TRANSPORTATION

CONTRACT CHANGE ORDER

Change Requested by: Engineer

CCO: 144	Suppl. No. 1	Contract No. 04 - 0120L4	Road ALA-80-1.6/2.7	FED. AID LOC.: NO FED AID

To: **M C M CONSTRUCTION INC**

You are directed to make the following changes from the plans and specifications or do the following described work not included in the plans and specifications for this contract. ***NOTE: This change order is not effective until approved by the Engineer.***

Description of work to be done, estimate of quantities and prices to be paid. (Segregate between additional work at contract price, agreed price and force account.) Unless otherwise stated, rates for rental of equipment cover only such time as equipment is actually used and no allowance will be made for idle time. This last percentage shown is the net accumulated increase or decrease from the original quantity in the Engineer's Estimate.

Extra Work at Force Account:

Provide additional funds for reaming bolt holes in the anchor plates of service platforms 18L, 21L and 18R, as specified in Contract Change Order No. 144, Supplement 0.

Estimated cost of Extra Work at Force Account $30,000.00

Estimated Cost: Increase ☑ **Decrease** ☐ **$30,000.00**

By reason of this order the time of completion will be adjusted as follows: 0 days

Submitted by

Signature	Resident Engineer Ben Ghafghazi	Date 6/8/2010

Approval Recommended by

Signature	Construction Engineer Ben Ghafghazi	Date 6/8/2010

Engineer Approval by

Signature	Construction Engineer Ben Ghafghazi	Date 6/8/2010

We the undersigned contractor, have given careful consideration to the change proposed and agree, if this proposal is approved, that we will provide all equipn furnish the materials, except as may otherwise be noted above, and perform all services necessary for the work above specified, and will accept as full paymer therefor the prices shown above.

NOTE: If you, the contractor, do not sign acceptance of this order, your attention is directed to the requirements of the specifications as to proceeding with the ordered work and filing a written protest within the time therein specified.

Contractor Acceptance by

Signature Not Required	(Print name and title)	Date

STATE OF CALIFORNIA - DEPARTMENT OF TRANSPORTATION

CONTRACT CHANGE ORDER MEMORANDUM

TO: AMER BATA / BEN GHAFGHAZI

FROM: BEN GHAFGHAZI

FILE: E.A. 04 - 0120L4
CO-RTE-PM ALA-80-1.6/2.7
FED. NO. NO FED AID

CCO#: 144 | SUPPLEMENT#: 2 | Category Code: CHPT

CONTINGENCY BALANCE (incl. this change): **$949,598.90**

COST: **$30,000.00** INCREASE ☑ DECREASE ☐

HEADQUARTERS APPROVAL REQUIRED? ☐ YES ☑ NO

SUPPLEMENTAL FUNDS PROVIDED: **$0.00**

IS THIS REQUEST IN ACCORDANCE WITH ENVIRONMENTAL DOCUMENTS? ☑ YES ☐ NO

CCO DESCRIPTION:
Additional Funds for CCO 144

PROJECT DESCRIPTION:
Construct bridge, roadway, building and electrical system.

Original Contract Time:	Time Adj. This Change:	Previously Approved CCO Time Adjustments:	Percentage Time Adjusted: (including this change)	Total # of Unreconciled Deferred Time CCO(s): (including this change)
810 Day(s)	0 Day(s)	0 Day(s)	0 %	0

THIS CHANGE ORDER PROVIDES FOR:
Additional funding for reaming anchor plate bolt holes and at three service platforms to align the holes with the anchor bolts shown on the contract plans.

The original Change Order No. 144 provided for the contractor to ream bolt holes in the anchor plates at service platforms 18L, 21L and 18R in order to align the holes with the anchor bolts as shown in the contract plans. The change order also provided for the contractor to provide custom washers for the bolts to account for the reaming performed. Supplement No. was written to provide additional funds for this work.

The labor cost required to perform this was more extensive than anticipated and the cost has now exceeded the previous estimates. Additional funding of $30,000.00 will be required to fund the work performed.

The work shall be compensated as extra work at force account at an estimated cost of $30,000.00 which shall be financed from the contract contingency funds. A cost analysis is on file.

No adjustment of contract time is warranted as the change will not affect the controlling operation.

Maintenance concurrence is not required as this change is an administrative change order to provide additional funding for previously approved work.

CONCURRED BY:

Construction Engineer:	Ben Ghafghazi	Date 12/28/2010
Bridge Engineer:		Date
Project Engineer:		Date
Project Manager:		Date
FHWA Rep.:		Date
Environmental:		Date
Other (specify):		Date
Other (specify):		Date
District Prior Approval By:		Date
HQ (Issue Approve) By:		Date
Resident Engineer's Signature:		Date 12/28/2010

ESTIMATE OF COST

	THIS REQUEST	TOTAL TO DATE
ITEMS	$0.00	$0.00
FORCE ACCOUNT	$30,000.00	$80,000.00
AGREED PRICE	$0.00	$0.00
ADJUSTMENT	$0.00	$0.00
TOTAL	$30,000.00	$80,000.00

FEDERAL PARTICIPATION

☐ PARTICIPATING ☐ PARTICIPATING IN PART ☑ NONE
☐ NON-PARTICIPATING (MAINTENANCE) ☐ NON-PARTICIPATING

FEDERAL SEGREGATION (if more than one Funding Source or P.I.P. type)
☐ CCO FUNDED PER CONTRACT ☐ CCO FUNDED AS FOLLOWS

FEDERAL FUNDING SOURCE	PERCENT

ADA Notice: For individuals with sensory disabilities, this document is available in alternate formats. For information call: (916) 654-6410 or TDD (916) 654-3880 or write Records and Forms Management, 1120 N Street, MS-89, Sacramento, CA 95814.

STATE OF CALIFORNIA - DEPARTMENT OF TRANSPORTATION

CONTRACT CHANGE ORDER

Change Requested by: Engineer

CCO: 144	Suppl. No. 2	Contract No. 04 - 0120L4	Road ALA-80-1.6/2.7	FED. AID LOC.: NO FED AID

To: **M C M CONSTRUCTION INC**

You are directed to make the following changes from the plans and specifications or do the following described work not included in the plans and specifications for this contract. ***NOTE: This change order is not effective until approved by the Engineer.***

Description of work to be done, estimate of quantities and prices to be paid. (Segregate between additional work at contract price, agreed price and force account.) Unless otherwise stated, rates for rental of equipment cover only such time as equipment is actually used and no allowance will be made for idle time. This last percentage shown is the net accumulated increase or decrease from the original quantity in the Engineer's Estimate.

Extra Work at Force Account:

Provide additional funds for the work specified under the original Change Order No. 144.

Estimated cost of Extra Work at Force Account $30,000.00

Estimated Cost: Increase ☑ Decrease ☐ **$30,000.00**

By reason of this order the time of completion will be adjusted as follows: 0 days

Submitted by

Signature	Resident Engineer BEN GHAFGHAZI	Date 12/28/2010

Approval Recommended by

Signature	Construction Engineer Ben Ghafghazi	Date 12/28/2010

Engineer Approval by

Signature	Construction Manager For Amer Bata	Date 12/29/2010

We the undersigned contractor, have given careful consideration to the change proposed and agree, if this proposal is approved, that we will provide all equipn furnish the materials, except as may otherwise be noted above, and perform all services necessary for the work above specified, and will accept as full paymer therefor the prices shown above.

NOTE: If you, the contractor, do not sign acceptance of this order, your attention is directed to the requirements of the specifications as to proceeding with the ordered work and filing a written protest within the time therein specified.

Contractor Acceptance by

Signature NOT Required	(Print name and title)	Date

STATE OF CALIFORNIA - DEPARTMENT OF TRANSPORTATION

CONTRACT CHANGE ORDER

Change Requested by:

CCO: 145	Suppl. No. 0	Contract No. 04 - 0120L4	Road ALA-80-1.6/2.7	FED. AID LOC.: NO FED AID

To: **M C M CONSTRUCTION INC**

You are directed to make the following changes from the plans and specifications or do the following described work not included in the plans and specifications for this contract. ***NOTE: This change order is not effective until approved by the Engineer.***

Description of work to be done, estimate of quantities and prices to be paid. (Segregate between additional work at contract price, agreed price and force account.) Unless otherwise stated, rates for rental of equipment cover only such time as equipment is actually used and no allowance will be made for idle time. This last percentage shown is the net accumulated increase or decrease from the original quantity in the Engineer's Estimate.

Extra Work at Lump Sum:

Provide labor, equipment and materials for constructing asphalt concrete access road. Lines and grades, and exact limits will be determined by the Engineer in the field. Asphalt Concrete shall be in accordance with Section 10-1.49 "ASPHALT CONCRETE" of the Special Provisions.

The contractor shall be compensated an agreed lump sum of $125,172.60 for the aforementioned work. This sum constitutues full compensation, including all applicable markups, for the work of this change.

Estimated cost of Extra Work at Lump Sum $125,172.60

Estimated Cost: **Increase** ☑ **Decrease** ☐ **$125,172.60**

By reason of this order the time of completion will be adjusted as follows: 0 days

Signature	**Resident Engineer** BEN GHAFGHAZI	**Date** 3/15/2010
Signature	**Construction Engineer** Ben Ghafghazi	**Date** 3/15/2010
Signature	**Construction Manager** Amer Bata	**Date** 3/22/10

We the undersigned contractor, have given careful consideration to the change proposed and agree, if this proposal is approved, that we will provide all equipment, furnish the materials, except as may otherwise be noted above, and perform all services necessary for the work above specified, and will accept as full payment therefor the prices shown above.

NOTE: If you, the contractor, do not sign acceptance of this order, your attention is directed to the requirements of the specifications as to proceeding with the ordered work and filing a written protest within the time therein specified.

Signature	**(Print name and title)** EDMUNDO A. ANCHI, TREASURER	**Date** 3/17/10

STATE OF CALIFORNIA - DEPARTMENT OF TRANSPORTATION

CONTRACT CHANGE ORDER MEMORANDUM

DATE: 3/10/2010 Page 1 of 1

TO: AMER BATA / BEN GHAFGHAZI

FROM: BEN GHAFGHAZI

FILE: E.A. 04 - 0120L4
CO-RTE-PM ALA-80-1.6/2.7
FED. NO. NO FED AID

CCO#: 145 | SUPPLEMENT#: 0 | Category Code: CJPJ | CONTINGENCY BALANCE (incl. this change) $2,323,150.40

COST: $125,172.60 INCREASE ☑ DECREASE ☐ HEADQUARTERS APPROVAL REQUIRED? ☐ YES ☑ NO

SUPPLEMENTAL FUNDS PROVIDED: $0.00 IS THIS REQUEST IN ACCORDANCE WITH ENVIRONMENTAL DOCUMENTS? ☑ YES ☐ NO

CCO DESCRIPTION:
Temporary Access Road

PROJECT DESCRIPTION:
Construct bridge, roadway, building and electrical system.

Original Contract Time:	Time Adj. This Change:	Previously Approved CCO Time Adjustments:	Percentage Time Adjusted: (including this change)	Total # of Unreconciled Deferred Time CCO(s): (including this change)
810 Day(s)	0 Day(s)	184 Day(s)	23 %	15

THIS CHANGE ORDER PROVIDES FOR:

Compensating the contractor for constructing temporary asphalt concrete access road from the western end of Maintenance Road to the construction access ramp to Westbound San Francisco-Oakland Bay Bridge (SFOBB), and where directed by the Engineer. Asphalt Concrete shall be in accordance with Section 10-1.49 "ASPHALT CONCRETE" of the Special Provisions.

Currently, there is no paved access to Westbound SFOBB because the existing access road had to be removed for the construction of the Oakland Touchdown 1 (OTD1) contract. Meanwhile, the contractor has constructed and maintained a temporary access road using aggregate base materials. It is anticipated that this access road will see heavy usage by construction vehicles for the future SFOBB contracts, but the project plans and specifications do not call for an access road to be provided. Therefore, this change is necessary to provide an access road that will serve as temporary construction access until traffic is shifted to the new Westbound SFOBB structures.

The method of payment for this work will be Extra Work at Lump Sum of $125,172.60, which can be financed from the contingency fund. A detailed cost analysis has been submitted by the contractor, and has been verified as reasonable by the Engineer. The cost analysis is in file at the Resident Engineer's office.

No adjustment of contract time is warranted as this change does not affect the controlling operation.

This change order has been requested by the Engineer, and has been discussed and concurred with Jaime Gutierrez of Project Development, Mike Forner, SFOBB Principal Construction Engineer, and Patrick Treacy, HQ Construction Coordinator.

CONCURRED BY:

Construction Engineer:	Ben Ghafghazi	Date 3/15/2010
Bridge Engineer:		Date
Project Engineer:	Jaime Gutierrez	Date 3/15/10
Project Manager:		Date
FHWA Rep.:		Date
Environmental:		Date
Other (specify):	Mike Forner, Principal TE	Date 3/16/10
Other (specify):	Patrick Treacy, HQ Const. Coord.	Date 3/15/10
District Prior Approval By:		Date
HQ (Issue Approve) By:		Date
Resident Engineer's Signature:		Date 3/15/2010

ESTIMATE OF COST

	THIS REQUEST	TOTAL TO DATE
ITEMS	$0.00	$0.00
FORCE ACCOUNT	$0.00	$0.00
AGREED PRICE	$125,172.60	$125,172.60
ADJUSTMENT	$0.00	$0.00
TOTAL	$125,172.60	$125,172.60

FEDERAL PARTICIPATION

☐ PARTICIPATING ☐ PARTICIPATING IN PART ☑ NONE
☐ NON-PARTICIPATING (MAINTENANCE) ☐ NON-PARTICIPATING

FEDERAL SEGREGATION (if more than one Funding Source or P.I.P. type)
☑ CCO FUNDED PER CONTRACT ☐ CCO FUNDED AS FOLLOWS

FEDERAL FUNDING SOURCE	PERCENT

ADA Notice: For individuals with sensory disabilities, this document is available in alternate formats. For information call: (916) 654-6410 or TDD (916) 654-3880 or write Records and Forms Management, 1120 N Street, MS-89, Sacramento, CA 95814.

CONTRACT CHANGE ORDER

Change Requested by:

CCO: 146	Suppl. No. 0	Contract No. 04 - 0120L4	Road ALA-80-1.6/2.7	FED. AID LOC.: NO FED AID

To: **M C M CONSTRUCTION INC**

You are directed to make the following changes from the plans and specifications or do the following described work not included in the plans and specifications for this contract. ***NOTE: This change order is not effective until approved by the Engineer.***

Description of work to be done, estimate of quantities and prices to be paid. (Segregate between additional work at contract price, agreed price and force account.) Unless otherwise stated, rates for rental of equipment cover only such time as equipment is actually used and no allowance will be made for idle time. This last percentage shown is the net accumulated increase or decrease from the original quantity in the Engineer's Estimate.

Provide labor, equipment and materials for performing the electrical changes as described below. The work specified herein, and all work otherwise directed by the Engineer, shall be performed in accordance with Section 86 "SIGNALS, LIGHTING AND ELECTRICAL SYSTEMS" of the Standard Specifications, and Section 10-3.10 "CONDUCTORS, CABLE AND WIRING" of Special Provisions.

Extra Work at Lump Sum:

1) As shown in sheet 3 of 50 and 4 of 50 of this CCO, change the locations of the two wooden lighting poles at "MRDTR Line" Sta. 13+00, and remove power connections.

2) As shown in sheet 5 through 25 of 50 of this CCO, add Photo Electric Cell (PEC3), conduits and cables, and change breaker size from 20A to 30A in the new Mole Substation.

3) As shown in sheets 26 of 50 through 50 of 50, between Pier 21L and the new Mole Substation, relocate two 50 pair #18 communication cables numbered 1473-26 and 1474-26 in one conduit instead of two conduits.

4) As shown in sheets 26 of 50 through 50 of 50, between Oakland Substation and the new Mole Substation, relocate the two 50 pair #18 communication cables numbered 2473-27 and 2474-27 in one conduit instead of two conduits.

5) As shown in sheets 26 of 50 through 50 of 50, from piers 18L and 21L to the new Mole Substation RTU, add cables 1656-1 and 1656-2.

6) As shown in sheets 26 of 50 through 50 of 50, relocate cables numbered 1006, 1007, 1803, 1804, 1626, 1627, UP171-10 and UP172-10.

7) As shown in sheets 26 of 50 through 50 of 50, revise cables from 1-3/C #16 to 1-4/C #16, 1-9/C #16 to 3-4/C #16, 1-12/C #16 to 8-4/C #16 and 1-2/C + gnd #6 to 1-3/C + gnd #6.

Extra Work at Lump Sum $179,565.00

Consideration of a time adjustment will be deferred until completion of the work specified herein. Determination of a commensurate time extension will be made in accordance with Section 8-1.07, "Liquidated Damages", of the Standard Specifications.

CONTRACT CHANGE ORDER

Change Requested by:

CCO: 146	Suppl. No. 0	Contract No. 04 - 0120L4	Road ALA-80-1.6/2.7	FED. AID LOC.: NO FED AID

Estimated Cost: **Increase** ☑ **Decrease** ☐ **$179,565.00**

By reason of this order the time of completion will be adjusted as follows: Deferred

Signature	**Resident Engineer** BEN GHAFGHAZI	**Date** 3/15/2010
Signature	**Construction Engineer** Ben Ghafghazi	**Date** 3/15/2010
Signature	**Construction Manager** Amer Bata	**Date** 3/22/10

We the undersigned contractor, have given careful consideration to the change proposed and agree, if this proposal is approved, that we will provide all equipment, furnish the materials, except as may otherwise be noted above, and perform all services necessary for the work above specified, and will accept as full payment therefor the prices shown above.

NOTE: If you, the contractor, do not sign acceptance of this order, your attention is directed to the requirements of the specifications as to proceeding with the ordered work and filing a written protest within the time therein specified.

Signature	**(Print name and title)** EDMUNDO A. PUCHI, TREASURER	**Date** 3/18/10

DIST	COUNTY	ROUTE	KILOMETER POST TOTAL PROJECT	SHEET No.	TOTAL SHEETS
04	Ala	80	1.6/2.7	569 R1	643

Carol Light — 05/15/06
REGISTERED ELECTRICAL ENGINEER — DATE

1-29-07
PLANS APPROVAL DATE

REGISTERED PROFESSIONAL ENGINEER — CAROL LIGHT No. 10145 Exp. 09/30/07 ELECTRICAL — STATE OF CALIFORNIA

SILVERMAN & LIGHT
1201 PARK AVENUE - SUITE 100
EMERYVILLE, CA 94608-3632

The State of California or its officers or agents shall not be responsible for the accuracy or completeness of electronic copies of this plan sheet.

To get to the Caltrans web site, go to: http://www.dot.ca.gov

Caltrans Metric

SHEET NOTES:

1. Existing 70C, 3#6 (480 V, Lighting ckt 272)
   3#6 (480 V, Lighting ckt 272)
2. Disconnect existing High Mast standard from existing circuit (ckt 272) When High Mask Lighting is install and energized.
3. Protect existing conduit conductors and pull box during construction.
4. Install temporary wood poles ~~riser and conduit~~ (Size as indicated on plan) ~~on temporary wood pole. Install riser conduit into existing manhole (Verify in field for exact location) and splice temporary conductors to existing conductors (ckt 272) in existing pull box.~~
5. Install temporary 310 W HPS, 480 V luminaire on wood poles. ~~and put into operation at the start of the construction. Remove when directed by the Engineer. See detail on E-200.~~
6. ~~Install temporary 10 mm messenger wire with 2#6 (480 V, Lighting). Extend temporary power aerially along temporary poles. Remove when directed by the Engineer.~~
7. Existing to remain in place and to be used as temporary lighting for construction. Remove as shown on contract plans when directed by the Engineer.

1

REGISTERED PROFESSIONAL ENGINEER — DAVID H. OTO No. 10699 Exp. 06/30/2011 ELECTRICAL — STATE OF CALIFORNIA

NOTES:

1. For Notes, Abbreviations and Legends, see E-9.
2. References:
   - for conduit schedules see sheet starting at E-224.
3. All temporary Underground and Roadway At-Grade work is to remain in place at the end of the contract.

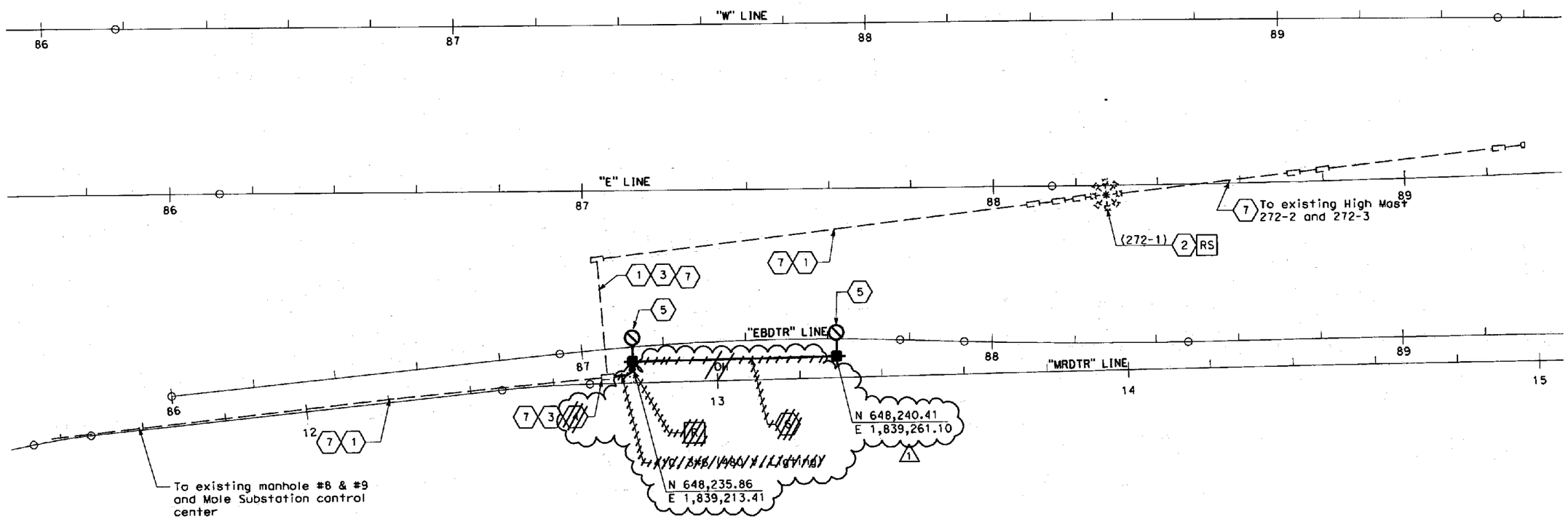

PLAN

MARK	DATE	DESCRIPTIONS	REV	CK	CCO NO.
1	1/29/10	Deleted conduit, cables to lighting wooden poles Added coordinates.	JH	EJL	Conductor Change/ Misc.

REVISIONS

CONTRACT CHANGE ORDER NO. 146
SHEET 3 OF 50

THIS PLAN ACCURATE FOR ELECTRICAL WORK ONLY

ALL DIMENSIONS ARE IN METERS UNLESS OTHERWISE SHOWN

TEMPORARY UNDERGROUND AND ROADWAY AT-GRADE
(HIGH MAST LIGHTING)

SCALE: 1:500

E-198

FOR REDUCED PLANS ORIGINAL SCALE IS IN MILLIMETERS 0 20 40 60 80

DGN FILE => t:\13103\MS\pse\OTO-Contract 1\CCO\Electrical\CCO-Conductor change & misc\40120lug198r1.dgn
USERNAME => halimj

CU 04251 — EA 0120L1

LAST REVISION 00-00-00 — DATE PLOTTED => 2/5/2010 TIME PLOTTED => 9:23:04 AM

STATE OF CALIFORNIA - DEPARTMENT OF TRANSPORTATION — Caltrans

DESIGN OVERSIGHT: Behzad Golemohammadi

CALCULATED/DESIGNED BY: BJ — DATE: 2/9/06 — REVISED BY
CHECKED BY: CL — 2/9/06 — DATE REVISED

DIST	COUNTY	ROUTE	KILOMETER POST TOTAL PROJECT	SHEET NO	TOTAL SHEETS
04	Ala	80	1.6/2.7	571 R1	643

Caltrans Metric

Carol Light 05/15/06
REGISTERED ELECTRICAL ENGINEER DATE

1-29-07
PLANS APPROVAL DATE

REGISTERED PROFESSIONAL ENGINEER CAROL LIGHT No. 10145 Exp. 09/30/07 ELECTRICAL STATE OF CALIFORNIA

SILVERMAN & LIGHT
1201 PARK AVENUE - SUITE 100
EMERYVILLE, CA 94608-3632

The State of California or its officers or agents shall not be responsible for the accuracy or completeness of electronic copies of this plan sheet.

To get to the Caltrans web site, go to: http://www.dot.ca.gov

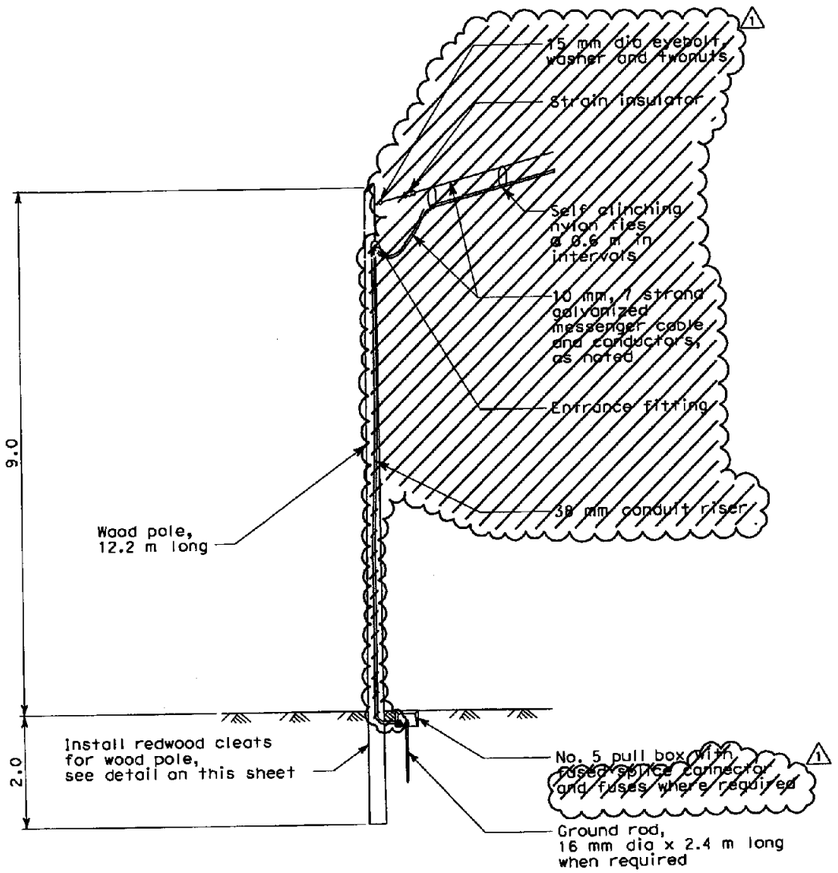

TEMPORARY WOOD POLE

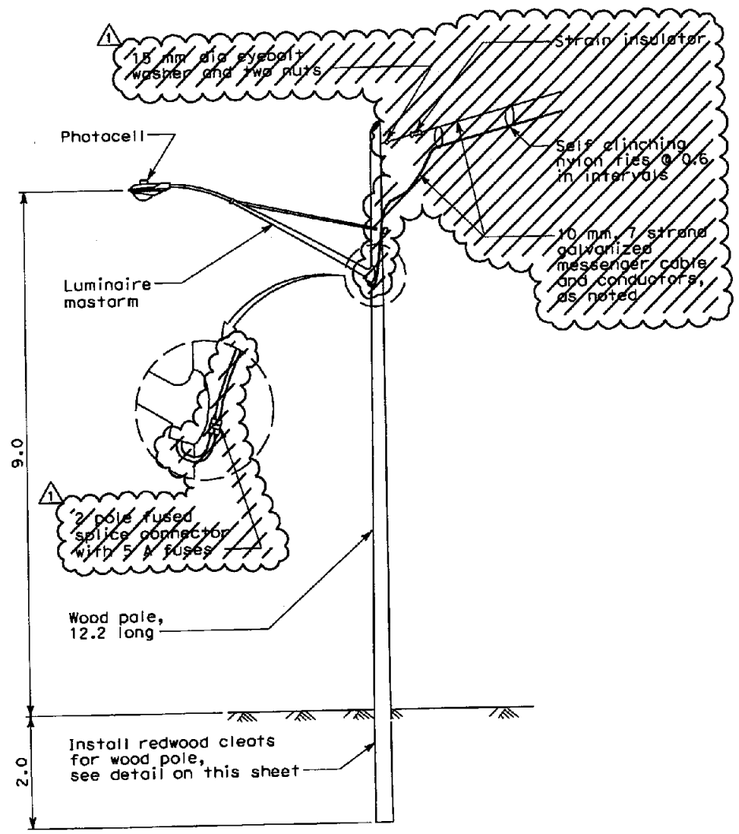

TYPICAL LUMINAIRE MOUNTING ON WOOD POLE

NOTES:

1. All Temporary Underground and Roadway At-Grade work is to remain in place at the end of the contract.

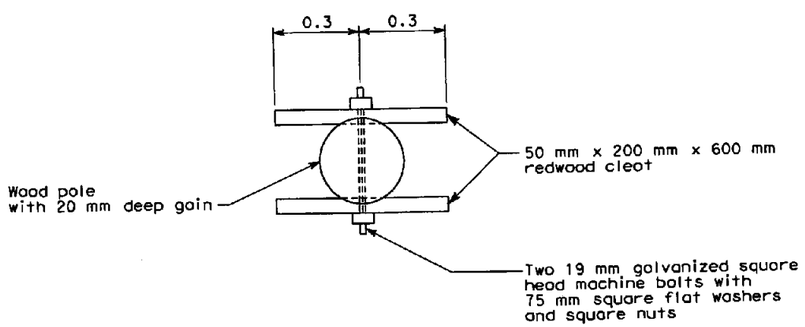

TYPICAL REDWOOD CLEAT DETAIL

REGISTERED PROFESSIONAL ENGINEER DAVID H. OTO No. 10699 Exp. 06/30/2011 ELECTRICAL STATE OF CALIFORNIA

MARK	DATE	DESCRIPTIONS	REV	CK	CCO No.
1	1/29/10	Deleted overhead cable and accessories.	JH	EJL	Conductor Change/ Misc

REVISIONS

CONTRACT CHANGE ORDER NO. 146
SHEET 4 OF 50

DETAILS
TEMPORARY UNDERGROUND AND ROADWAY AT-GRADE TEMPORARY WOOD POLE
NO SCALE

E-200

ALL DIMENSIONS ARE IN METERS UNLESS OTHERWISE SHOWN

THIS PLAN ACCURATE FOR ELECTRICAL WORK ONLY

FOR REDUCED PLANS ORIGINAL SCALE IS IN MILLIMETERS 0 20 40 60 80

DGN FILE => T:\13103\MS\pse\OTO-Contract 1\CCO\Electrical\CCO-Conductor change & misc\401201ug200r1.dgn
USERNAME => halimj

CU 04251 EA 0120L1

DESIGN OVERSIGHT: Behzad Golemohammadi

	CALCULATED/ DESIGNED BY	DATE	REVISED BY
	BJ	2/9/06	
	CHECKED BY	CL	2/9/06	DATE REVISED

STATE OF CALIFORNIA - DEPARTMENT OF TRANSPORTATION
Caltrans

LAST REVISION 00-00-00
DATE PLOTTED => 2/5/2010
TIME PLOTTED => 9:26:59 AM

DIST	COUNTY	ROUTE	KILOMETER POST TOTAL PROJECT	SHEET NO	TOTAL SHEETS
04	Ala	80	1.6/2.7	494 R1	643

REGISTERED ELECTRICAL ENGINEER 05/15/06 DATE

1-29-07
PLANS APPROVAL DATE

REGISTERED PROFESSIONAL ENGINEER JENS ERLINGSSON No. 8249 Exp. 9/30/08 ELECTRICAL STATE OF CALIFORNIA

PB POWER, Inc.
A Parsons Brinckerhoff Company
303 Second St., Suite 700N
San Francisco, CA 94107-1317

The State of California or its officers or agents shall not be responsible for the accuracy or completeness of electronic copies of this plan sheet.

To get to the Caltrans web site, go to: http://www.dot.ca.gov

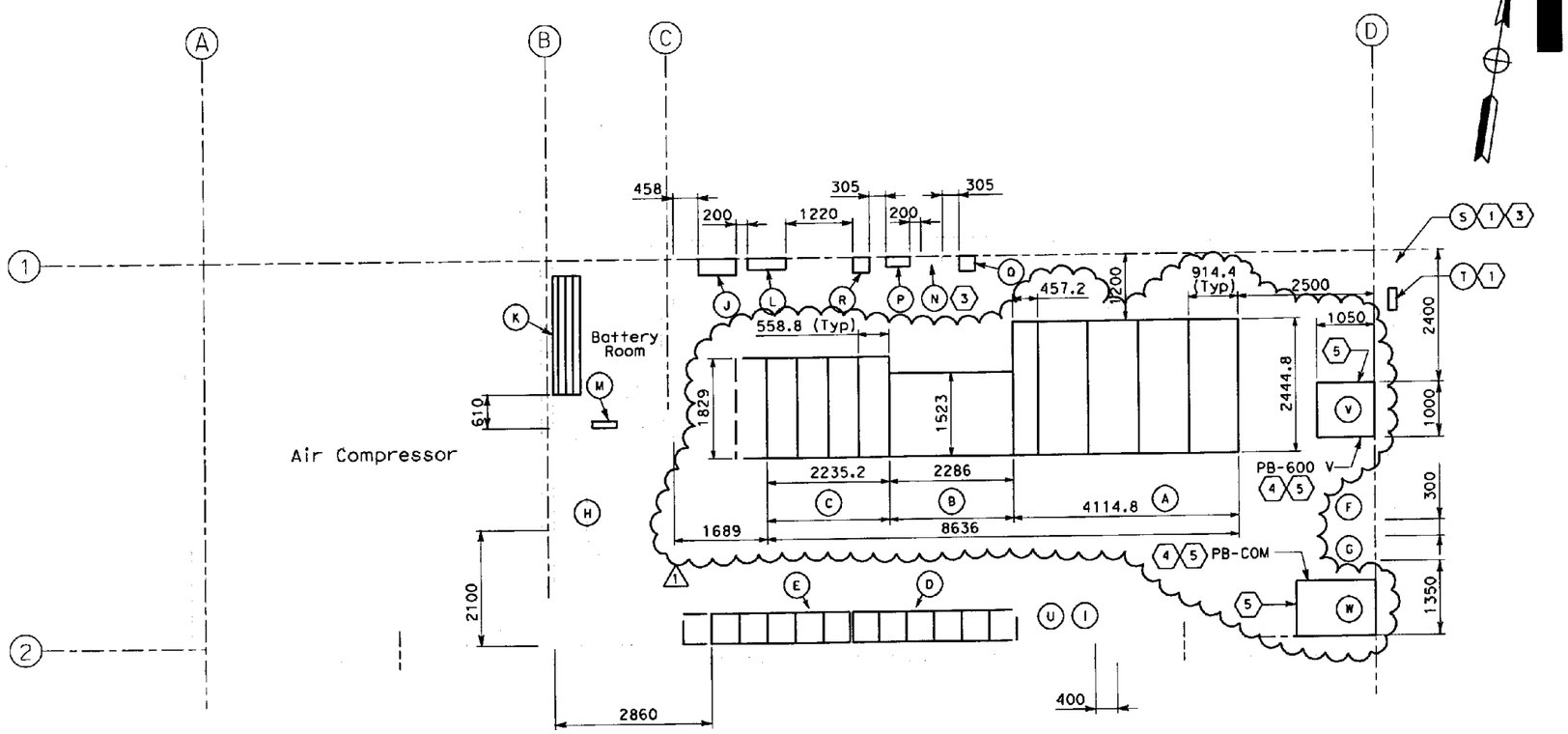

PLAN

EQUIPMENT SCHEDULE

- (A) 12.47 kV Metalclad Switchgear, 1200 A Bus, 500 MVA.
- (B) 750 kVA Power Transformer, Dry Type, 12.47 kV - 480 V, 3-phase.
- (C) 480 V Metalclad Switchgear, 1600 A Bus, 3 phase.
- (D) 480 V Low Voltage Control Center (LVCC-B) 600 A Bus, 3-phase.
- (E) 480 V Low Voltage Control Center (LVCC-A) 600 A Bus, 3-phase.
- (F) Telephone Backboard - #TEL-MOLE.
- (G) Scada Communication Terminal Box # COM-MOLE.
- (H) Remote Terminal Unit RTU #16.
- (I) Security Intrusion Alarm Control Panel. (1)
- (J) Battery Charger & Rectifier
- (K) 125 VDC Batteries
- (L) 125 VDC Panel DP-A.
- (M) 125 VDC Battery Safety Switch.
- (N) Lighting Panel LP-A, 208 Y/120 V, 3-phase, 4-wire.
- (P) Utility Panel UP-004, 208 Y/120 V, 3-phase, 4-wire.
- (Q) 30 kVA, Dry Type Transformer, 480 V - 208 Y/120 V, 3-phase, 4-wire.
- (R) 30 kVA, Dry Type Transformer, 480 V - 208 Y/120 V, 3-phase, 4-wire.
- (S) Photo Electric Cell PEC1 (Building Lighting).
- (T) Photo Electric Cell PEC2 and PEC3 (Bridge Lighting).
- (U) Fire Alarm Local Control Panel.
- (V) "PB-600 V" Size: 1000 W x 1450 D x 1000 H
- (W) "PB-COMMUNICATION" Size: 1000 W x 1450 D x 1000 H (1)

SHEET NOTES:

1. Photo electric cells are located outdoors, mounted on the roof.
2. These items comprise the 12.47 kV Unit Substation.
3. These items are provide and installed in the "Mole Substation-Architectural" Electric bid item.
4. The box shall be inherently resistant to corrosion steel plate, suitable for indoor use (Nema 12). Fabrication of the pull box shall be provided with structural angle for structural integrity. Contractor to submit pre-fabrication for Engineers review. (1)
5. Provide removable bolted cover steel plate.

NOTES:

1. Equipment dimensions shown are approximate. Contractor shall verify, prior to installation and without additional cost to the State, that the procured equipment meets required working clearances per NEC.
2. For equipment seismic anchoring requirements, See Electrical Special Provisions and manufacturer's recommendations.
3. References:
   - For substation conduits stub-ups, see sheet AE-5.
   - For duct banks and manholes, see sheet AE-5.
   - For LVCC-A elevation and schedule, see sheet E-131.
   - For LVCC-B elevation and schedule, see sheet E-133
   - For 12.47 kV to 480 V unit substation plan and elevation. see sheet E-129.
   - For DP-A and UP-004 panel schedules, see sheets E-147 and E-148.
   - For LP-A panel schedule, see sheet AE-7.
   - For RTU #16 panel layout, see sheet E-163.
   - For COM-MOLE panel layout, see sheet E-161.
   - For TEL-MOLE terminal box wiring, see sheet E-165.

REGISTERED PROFESSIONAL ENGINEER DAVID H. OTO No. 10699 Exp. 06/30/2011 ELECTRICAL STATE OF CALIFORNIA (1)

MARK	DATE	DESCRIPTIONS	REV	CK	CCO No.
1	1/29/10	Revised description on equipment schedule, dimensions and outline of unit substation. Added sheet notes 4 and 5.	RSB	EJL	Conductor Change/ Misc

REVISIONS

CONTRACT CHANGE ORDER NO. 146
SHEET 5 OF 50

MOLE SUBSTATION ELECTRICAL
(EQUIPMENT ARRANGEMENT)
SCALE: 1:50

E-123

DATE	REVISED BY	CYF	DATE	CALCULATED/ DESIGNED BY
2/06	DATE REVISED	EDC	2/06	CHECKED BY

DESIGN OVERSIGHT
BEHZAD GOLEMOHAMMADI

STATE OF CALIFORNIA - DEPARTMENT OF TRANSPORTATION
Caltrans

LAST REVISION 00-00-00
DATE PLOTTED => 2/2/2010
TIME PLOTTED => 1:28:25 PM

FOR REDUCED PLANS ORIGINAL SCALE IS IN MILLIMETERS 0 20 40 60 80

DGN FILE =>T:\13103\MS\pse\OTO-Contract 1\CCO\Electrical\CCO-Conductor change & misc\40120lud123r1.dgn
USERNAME =>llorico

CU 04251 | EA 0120L1

DIST	COUNTY	ROUTE	KILOMETER POST TOTAL PROJECT	SHEET No	TOTAL SHEETS
04	Ala	80	1.6/2.7	495 R1	643

REGISTERED ELECTRICAL ENGINEER 05/15/06 DATE

1-29-07
PLANS APPROVAL DATE

REGISTERED PROFESSIONAL ENGINEER JENS ERLINGSSON No. 8249 EXP. 9/30/08 ELECTRICAL STATE OF CALIFORNIA

PB POWER, Inc.
A Parsons Brinckerhoff Company
303 Second St., Suite 700N
San Francisco, CA 94107-1317

The State of California or its officers or agents shall not be responsible for the accuracy or completeness of electronic copies of this plan sheet.

To get to the Caltrans web site, go to: http://www.dot.ca.gov

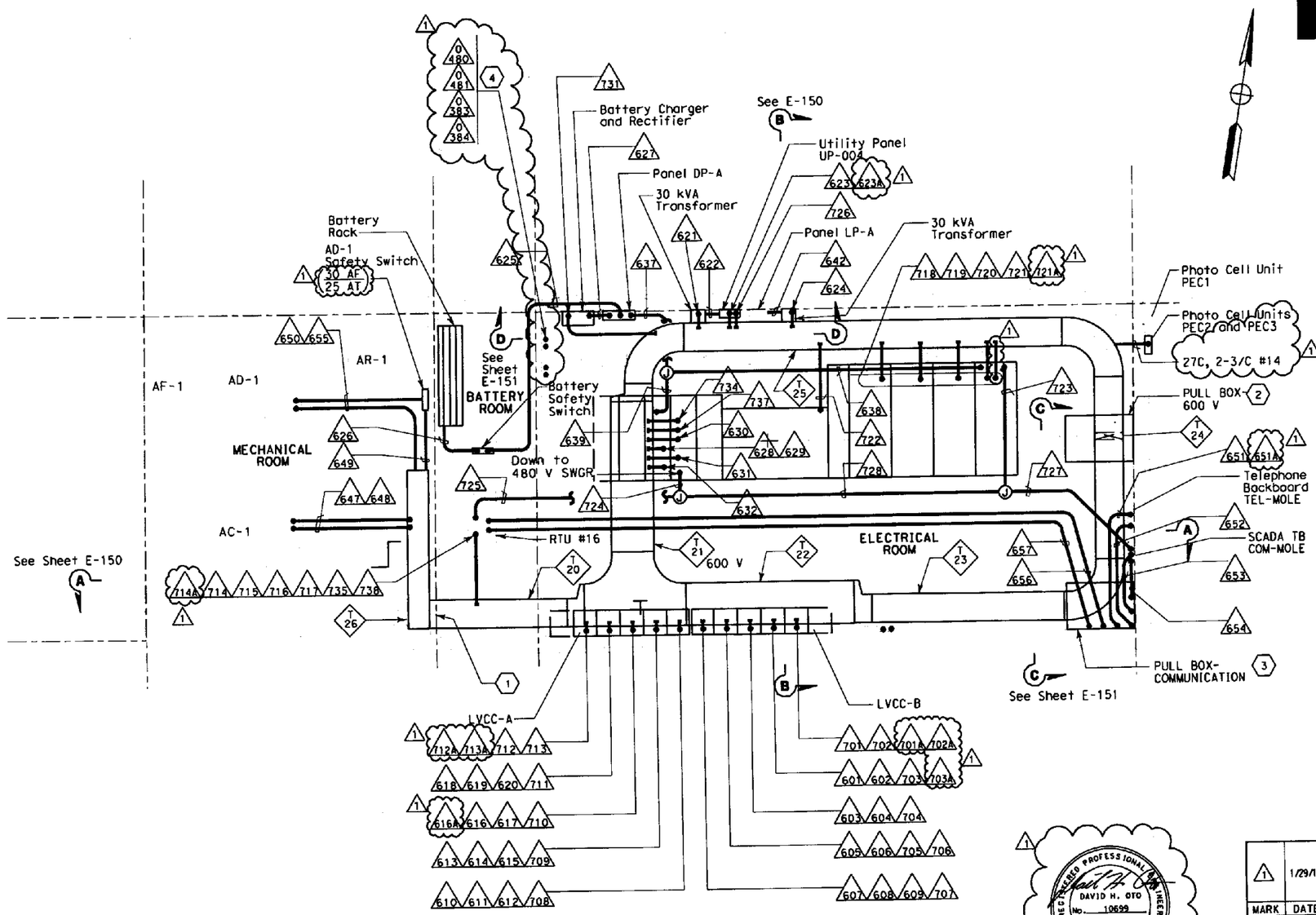

PLAN

SHEET NOTES:

1. For locations of the wall penetrations, see Architectural Structural drawings.
2. Pull box dimensions shall be 1000 (W) x 1450 (D) x 1000 (H).
3. Pull box dimensions shall be 1450 (W) x 1000 (D) x 1000 (H).
4. Stub-up conduits shall be cop for future use.

NOTES:

1. Coordinate electrical installations with other systems to avoid interferences. Relocate if required and approved by the Engineer.
2. For typical cable troy support installations, see sheet E-152.
3. Contractor shall supply and install a UL listed, F-rated for one hour, firestop system for conduit and cable tray penetrating through fire walls. Firestop system for cable troy shall be easily removable for future cable installation.
4. Reference:
   - For sections, see sheets E-150 and E-151.
   - For equipment arrangement plan, see sheet E-123.
   - For circuit and conduit/cable tray schedules, see sheets starting at E-224.
   - For cable tray supports, see sheet E-149.
   - For underground conduits inside the building, see sheet AE-5.

REGISTERED PROFESSIONAL ENGINEER DAVID H. OTO No. 10699 Exp. 06/30/2011 ELECTRICAL STATE OF CALIFORNIA

MARK	DATE	DESCRIPTIONS	REV	CK	CCO No.
1	1/29/10	Added conduits 714A, 712A, 713A, 616A, 701A, 702A, 703A, 651A, 721A, 623A, 0480, 0481, 0383, 0384, and sheet notes 4. Changed conduit size 603 and 727.	RSB	EJL	Conductor Change/ Misc

REVISIONS

CONTRACT CHANGE ORDER NO. 146
SHEET 6 OF 50

MOLE SUBSTATION ELECTRICAL
(CONDUIT AND CABLE TRAY)
SCALE 1:50

E-124

CALCULATED/ DESIGNED BY	FK	DATE 2/06	REVISED BY
CHECKED BY	AB	2/06	DATE REVISED

DESIGN OVERSIGHT
BEHZAD GOLEMOHAMMADI

STATE OF CALIFORNIA - DEPARTMENT OF TRANSPORTATION
Caltrans

LAST REVISION 00-00-00
DATE PLOTTED => 2/2/2010
TIME PLOTTED => 1:28:42 PM

FOR REDUCED PLANS ORIGINAL SCALE IS IN MILLIMETERS 0 20 40 60 80

DGN FILE =>T:\13103\MS\pse\OTD-Contract 1\CCO\Electrical\CCO-Conductor change & misc\40120lud124r1.dgn
USERNAME =>llorico

CU 04251 | EA 0120L1

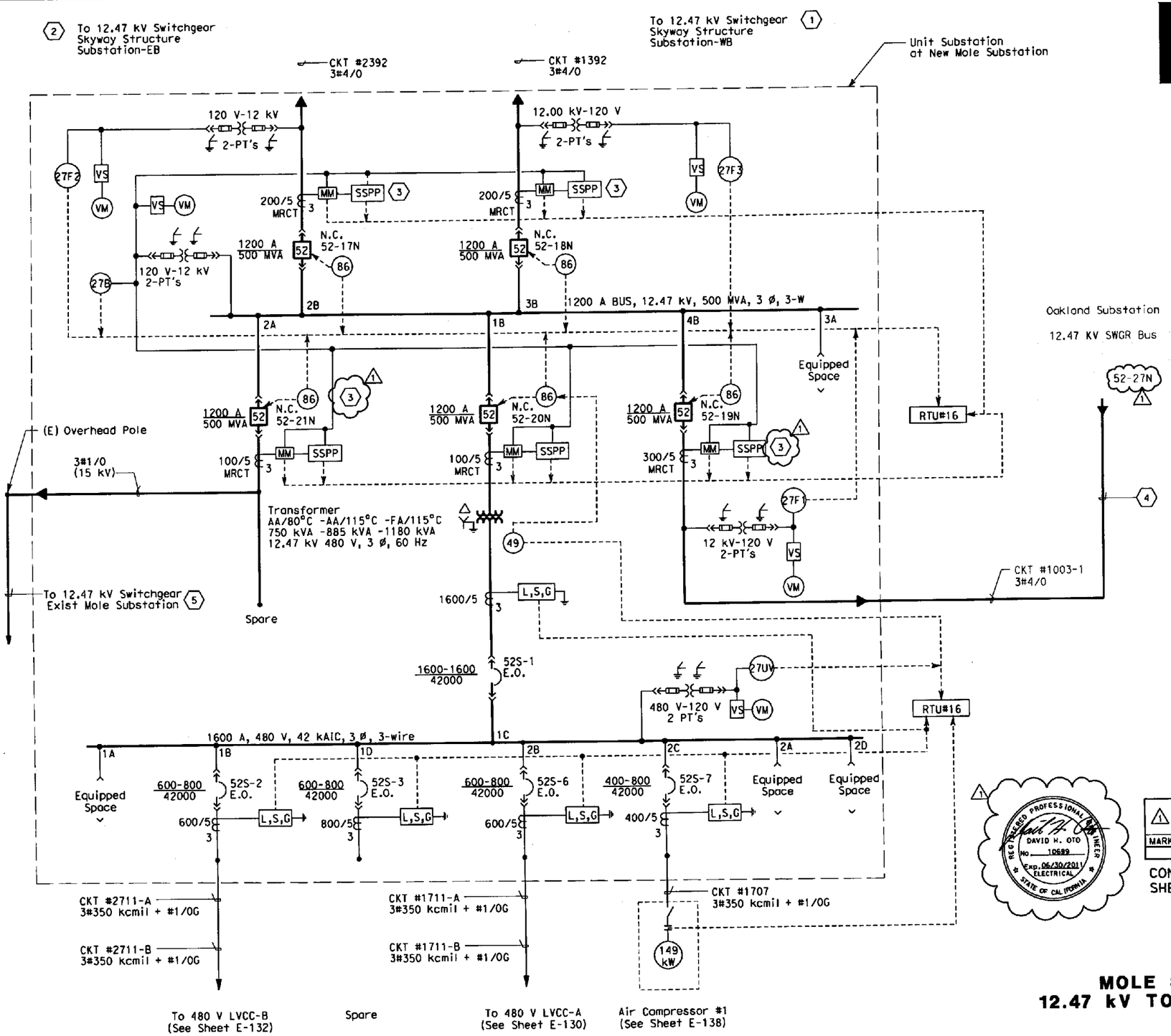

DIST	COUNTY	ROUTE	KILOMETER POST TOTAL PROJECT	SHEET No	TOTAL SHEETS
04	Ala	80	1.6/2.7	497 R1	643

REGISTERED ELECTRICAL ENGINEER 05/15/06 DATE

1-29-07
PLANS APPROVAL DATE

REGISTERED PROFESSIONAL ENGINEER JENS ERLINDSSON No. 8249 Exp. 9/30/08 ELECTRICAL STATE OF CALIFORNIA

PB POWER, Inc.
A Parsons Brinckerhoff Company
303 Second St., Suite 700N
San Francisco, CA 94107-1317

The State of California or its officers or agents shall not be responsible for the accuracy or completeness of electronic copies of this plan sheet.

To get to the Caltrans web site, go to: http://www.dot.ca.gov

Caltrans Metric

SHEET NOTES:

1. Connect to breaker No. 52-12N of 12.47 kV switchgear. See Skyway Structure Contract 04-012024.
2. Connect to breaker No. 52-15N of 12.47 kV switchgear.See Skyway Structure Contract 04-012024.
3. Requires directional overcurrent protection.
4. Terminate cable to 12.47 kV switchgear inside Oakland Substation building (by others) via MH-1.
5. Temporary 12.47 kV Feeder tie breaker, see sheets E-129 and E-182.

NOTES:

1. References:
   - For 12.47 kV overall single line diagram, see sheet E-125.
   - For unit substation elevation and dimensions, see sheet E-129.
   - For 12.47 kV switchgear connection diagrams, see sheets E-139 and E-140.
   - For 480 V switchgear and transformer connection diagrams, see sheets E-143 and E-144.

REGISTERED PROFESSIONAL ENGINEER DAVID H. OTO No. 10689 Exp. 06/30/2011 ELECTRICAL STATE OF CALIFORNIA

MARK	DATE	DESCRIPTIONS	REV	CK	CCO No.
1	1/29/10	Revised breaker No. Added directional relay in breaker 52-21N, 52-19N.	JH	EJL	Conductor Change/ Misc

REVISIONS

CONTRACT CHANGE ORDER NO. 146
SHEET 7 OF 50

DETAILS
MOLE SUBSTATION ELECTRICAL
12.47 kV TO 480 V SINGLE LINE DIAGRAM
NO SCALE

E-126

REVISED BY	DATE REVISED

CALCULATED/ DESIGNED BY	DATE 2/06
AB	2/06
CHECKED BY	
FK	

DESIGN OVERSIGHT
BEHZAD GOLEMOHAMMADI

STATE OF CALIFORNIA - DEPARTMENT OF TRANSPORTATION
Caltrans

LAST REVISION 00-00-00
DATE PLOTTED => 2/2/2010
TIME PLOTTED => 1:28:59 PM

FOR REDUCED PLANS ORIGINAL SCALE IS IN MILLIMETERS 0 20 40 60 80

DGN FILE =>T:\13103\MS\pse\OTD-Contract 1\CCO\Electrical\CCO-Conductor change & misc\40120lud126r1.dgn
USERNAME =>llorica

CU 04251 | EA 0120L1

DIST	COUNTY	ROUTE	KILOMETER POST TOTAL PROJECT	SHEET No	TOTAL SHEETS
04	Ala	80	1.6/2.7	498 R1	643

REGISTERED ELECTRICAL ENGINEER 05/15/06 DATE

1-29-07
PLANS APPROVAL DATE

PB POWER, Inc.
A Parsons Brinckerhoff Company
303 Second St., Suite 700N
San Francisco, CA 94107-1317

REGISTERED PROFESSIONAL ENGINEER JENS ERLINGSSON No. 8249 Exp. 9/30/08 ELECTRICAL STATE OF CALIFORNIA

The State of California or its officers or agents shall not be responsible for the accuracy or completeness of electronic copies of this plan sheet.

To get to the Caltrans web site, go to http://www.dot.ca.gov

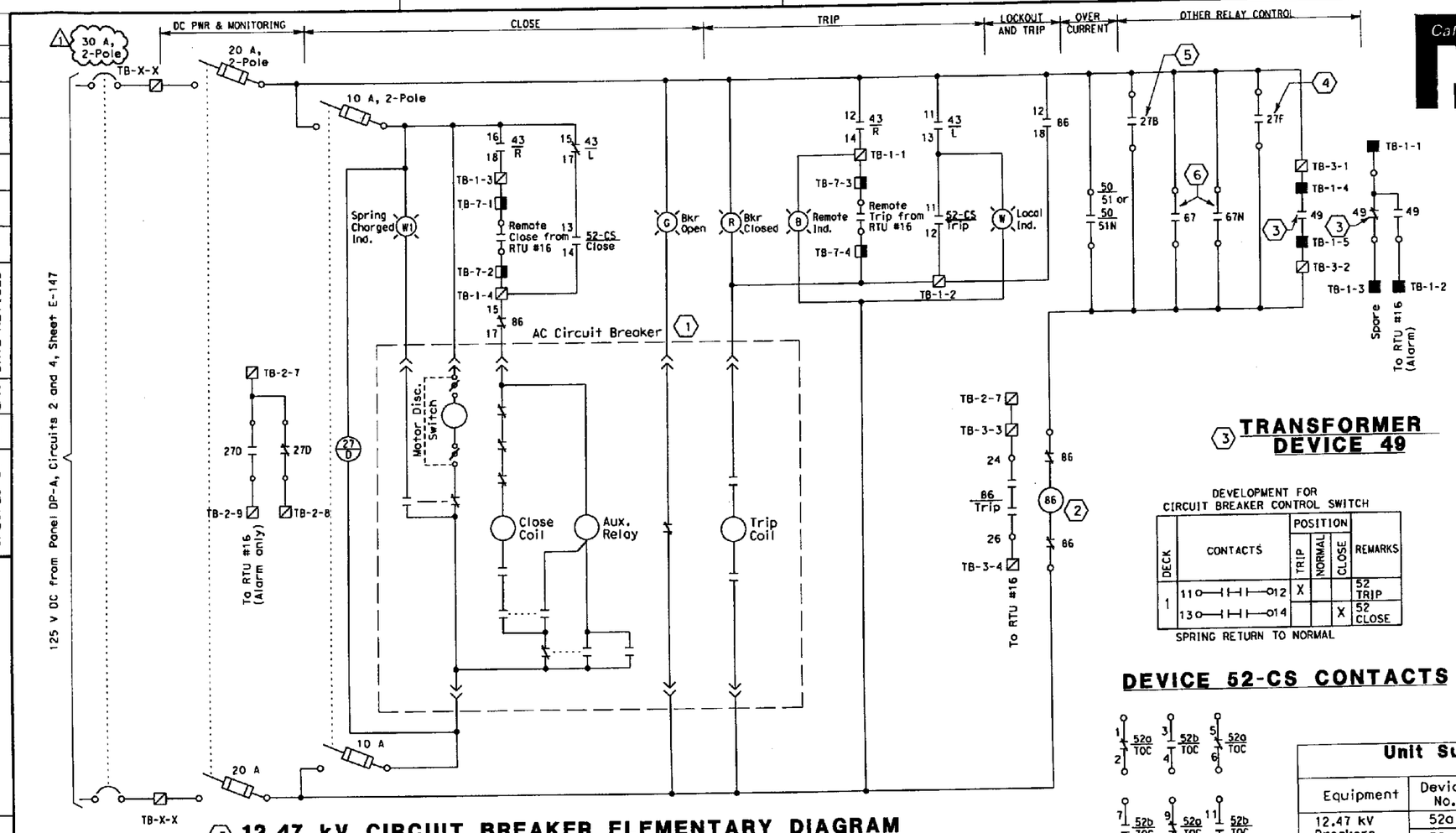

7 12.47 kV CIRCUIT BREAKER ELEMENTARY DIAGRAM

MARK	DATE	DESCRIPTIONS	REV	CK	CCO No.
1	1/29/10	Revised breaker No. Changed breaker size from 20A to 30A.	JH	EJL	Conductor Change/ Misc

REVISIONS

CONTRACT CHANGE ORDER NO. 146
SHEET 8 OF 50

3 TRANSFORMER DEVICE 49

DEVELOPMENT FOR CIRCUIT BREAKER CONTROL SWITCH

DECK	CONTACTS	POSITION TRIP	NORMAL	CLOSE	REMARKS
1	11 — 12	X			52 TRIP
	13 — 14			X	52 CLOSE

SPRING RETURN TO NORMAL

DEVICE 52-CS CONTACTS

BKR 52-TOC CONTACTS

SHEET NOTES:

1. 12.47 kV circuit breaker contacts are shown with the breaker in open position.
2. Device 86 Lock-out relay contacts and wiring are shown in reset position.
3. Device 49, Transformer Over-Temperature, is required only for 12.47 kV circuit breaker 52-20N, See sheet E-144.
4. Device 27F Feeder Undervoltage relay and wiring is not required for 12.47 kV circuit breakers 52-17N, 52-18N and 52-19N only.
5. Device 27B Bus Undervoltage relay and wiring is required for 12.47 kV circuit breaker 52-20N only.
6. Device 67 and 67N Directional Overcurrent relays and wiring are required for 12.47 kV circuit breakers 52-17N, 52-18N, 52-19N and 52-21N only. 1
7. Elementary diagram is typical with exceptions noted for breakers 52-17N, 52-18N, 52-19N, 52-20N and 52-21N. 1

NOTES:

1. References:
   - For unit substation connection diagrams, see sheets E-139, E-140, E-143 and E-144.
   - For single line diagram, see sheet E-126.
   - For RTU #16 wiring diagrams, see sheets E-156 thru E-158.

Unit Substation SCADA Inputs/Outputs (To RTU #16)

Equipment	Device No.	Description	Digital Input	Digital Output	Low Level Com.
12.47 kV Breakers 52-17N 52-18N 52-19N 52-20N 52-21N	52a	Breaker Open	1		
	52b	Breaker Closed	1		
	52a	Breaker Open		1	
	52b	Breaker Closed		1	
	27D	DC Undervoltage	1		
	86	Lock-out Relay	1		
	4 27F	Feeder Undervoltage	1		
	43 L/R	Local/Remote	2		
	(SSPP) 50/51 50/51N	Overcurrent	1		
	MM	3-phase amps			1
		Power Factor			1
		Kilowatt			1
		Kilovars			1
3 Transformer	49	Over-temperature	1		
5 12.47 kV Swgr	27B	12.47 kV Bus Undervoltage	1		
480 V Swgr	27UV	480 V Bus Undervoltage	1		

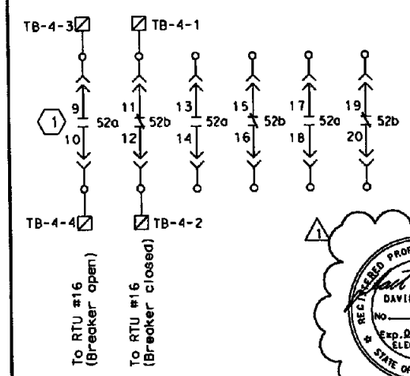

BKR 52 CONTACTS

DEVELOPMENT FOR LOCKOUT RELAY (MANUALLY RESET)

DECK	CONTACTS	POS. TRIP	RESET	REMARKS
1	11 — 13		X	SPARE
	12 — 18	X		52 TRIP
	15 — 17		X	52 CLOSE
	14 — 16	X		SPARE
2	21 — 23		X	SPARE
	22 — 28	X		SPARE
	25 — 27		X	SPARE
	24 — 26	X		To RTU #16

DEVICE 86 CONTACTS

DEVELOPMENT FOR LOCAL - REMOTE CONTROL SWITCH

DECK	CONTACTS	POS. LOCAL	REMOTE	
1	11 — 13	X		52 TRIP
	12 — 14		X	52 TRIP
	15 — 17	X		52 CLOSE
	16 — 18		X	52 CLOSE
2	21 — 23	X		To RTU #16
	22 — 24		X	To RTU #16
	25 — 27	X		SPARE
	26 — 28		X	SPARE

DEVICE 43 L/R CONTACTS

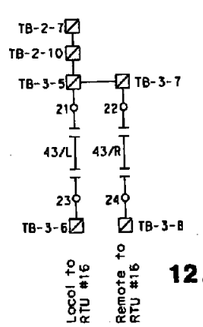

DETAILS
MOLE SUBSTATION ELECTRICAL
12.47 kV CIRCUIT BREAKER ELEMENTARY DIAGRAM
NO SCALE

E-127

STATE OF CALIFORNIA - DEPARTMENT OF TRANSPORTATION
Caltrans

DESIGN OVERSIGHT: BEHZAD GOLEMOHAMMADI

CALCULATED/DESIGNED BY: AB DATE 2/06 — REVISED BY
CHECKED BY: FK 2/06 — DATE REVISED

LAST REVISION 00-00-00 — DATE PLOTTED => 2/2/2010 TIME PLOTTED => 1:29:27 PM

FOR REDUCED PLANS ORIGINAL SCALE IS IN MILLIMETERS 0 20 40 60 80

DGN FILE =>T:\13103\WS\pse\OTD-Contract 1\CCO\Electrical\CCO-Conductor change & misc\40120lud27r1.dgn
USERNAME =>llorico

CU 04251 | EA 0120L1

DIST	COUNTY	ROUTE	KILOMETER POST TOTAL PROJECT	SHEET No	TOTAL SHEETS
04	Ala	80	1.6/2.7	499 R1	643

REGISTERED ELECTRICAL ENGINEER 05/15/06 DATE

1-29-07
PLANS APPROVAL DATE

REGISTERED PROFESSIONAL ENGINEER JENS ERLINGSSON NO. 8249 EXP. 9/30/08 ELECTRICAL STATE OF CALIFORNIA

PB POWER, Inc.
A Parsons Brinckerhoff Company
303 Second St., Suite 700N
San Francisco, CA 94107-1317

The State of California or its officers or agents shall not be responsible for the accuracy or completeness of electronic copies of this plan sheet.

To get to the Caltrans web site, go to http://www.dot.ca.gov

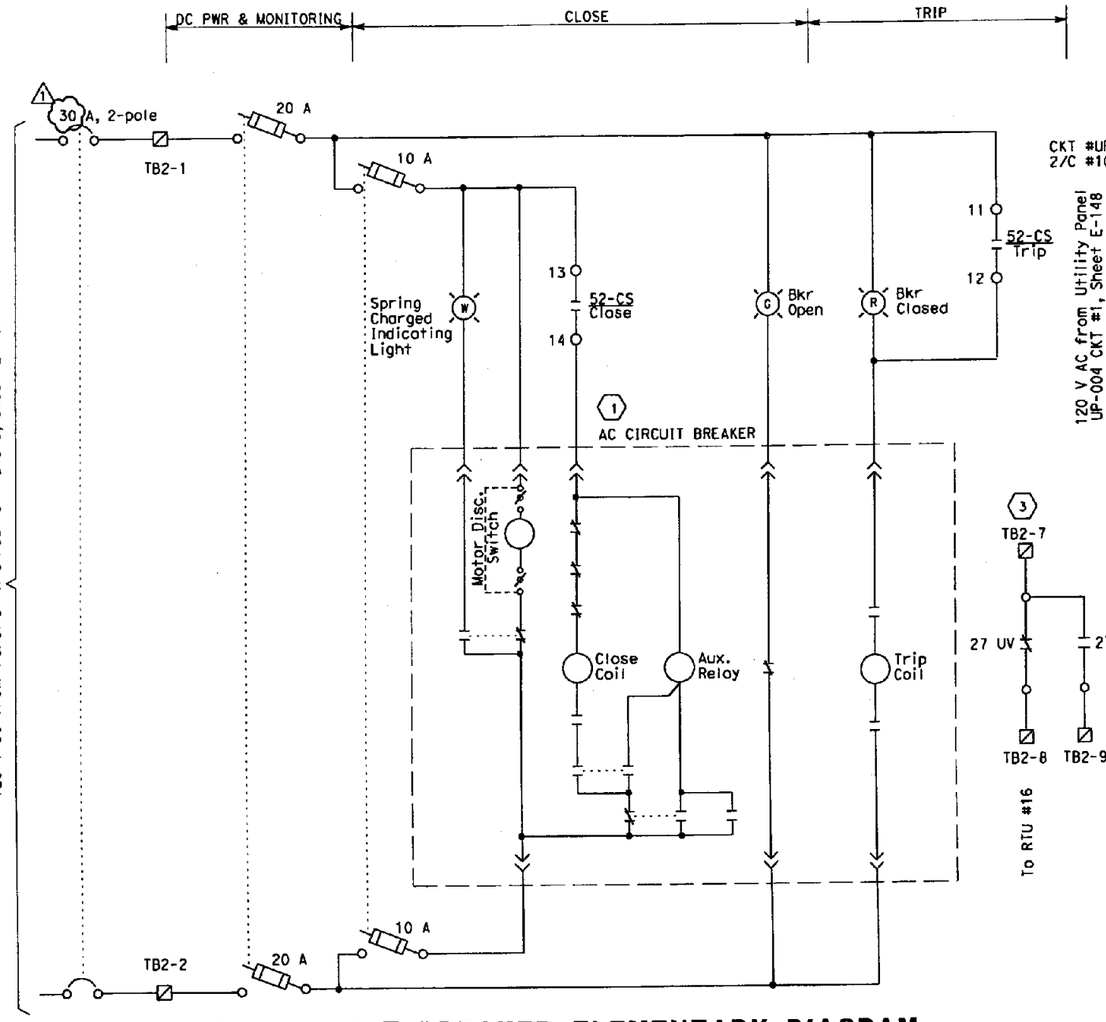

2 480 V CIRCUIT BREAKER ELEMENTARY DIAGRAM

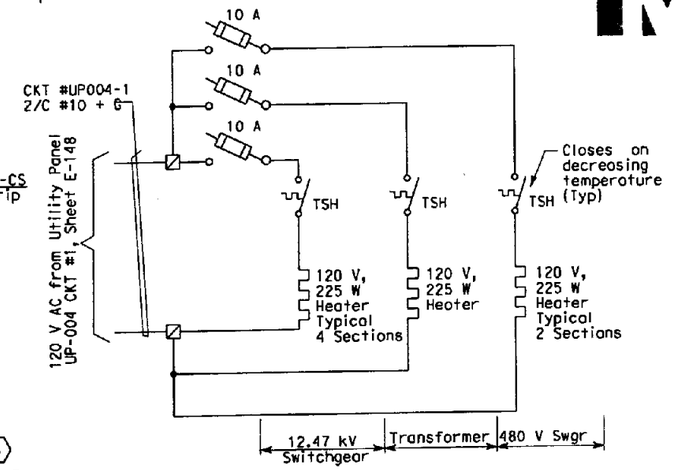

UNIT SUBSTATION CUBICLE SPACE HEATER

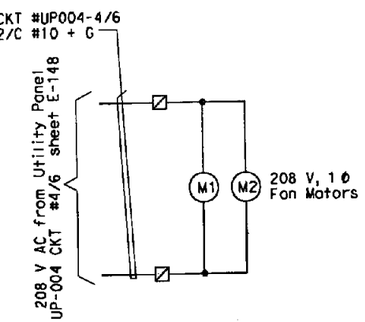

TRANSFORMER COOLING FANS

DEVELOPMENT FOR CIRCUIT BREAKER CONTROL SWITCH

DECK	CONTACTS	POSITION TRIP	POSITION NORMAL	POSITION CLOSE	REMARKS
1	11 ⊣ ⊢ ⊢ 12	X			52 Trip
	13 ⊣ ⊢ ⊢ 14			X	52 Close

Spring return to normal

DEVICE 52-CS CONTACTS

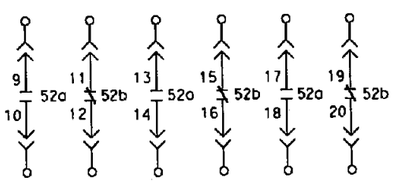

1 BKR 52 CONTACTS

SHEET NOTES:

1. Circuit breaker contacts are shown with the breaker in open position.
2. Elementary diagram shown for breaker 52S-1. Typical for breakers 52S-2, 52S-3, 52S-6 and 52S-7.
3. Bus undervoltage input to RTU #16 is for breaker 52S-1 only.

NOTES:

1. References:
   - For 480 V switchgear and transformer connection diagrams, see sheets E-143 and E-144.
   - For single line diagram, see sheets E-125 and E-126.

MARK	DATE	DESCRIPTIONS	REV	CK	CCO No.
1	1/29/10	Changed breaker size from 20A to 30A.	JH	EJL	Conductor Change/ Misc

REVISIONS

CONTRACT CHANGE ORDER NO. 146
SHEET 9 OF 50

REGISTERED PROFESSIONAL ENGINEER DAVID H. DIO NO. 10699 EXP. 06/30/2011 ELECTRICAL STATE OF CALIFORNIA

DETAILS
MOLE SUBSTATION ELECTRICAL
480 V SWITCHGEAR CIRCUIT BREAKER ELEMENTARY DIAGRAM

NO SCALE

E-128

STATE OF CALIFORNIA - DEPARTMENT OF TRANSPORTATION
Caltrans

DESIGN OVERSIGHT: BEHZAD GOLEMOHAMMADI

CALCULATED/ DESIGNED BY	AB	DATE 2/06	REVISED BY
CHECKED BY	FK	2/06	DATE REVISED

LAST REVISION 00-00-00
DATE PLOTTED => 2/2/2010
TIME PLOTTED => 1:29:48 PM

FOR REDUCED PLANS ORIGINAL SCALE IS IN MILLIMETERS 0 20 40 60 80

DGN FILE =>T:\13103\MS\pse\OTD-Contract 1\CCO\Electrical\CCO-Conductor change & misc\401201ud128r1.dgn
USERNAME =>llorico
CU 04251
EA 0120L1

DIST	COUNTY	ROUTE	KILOMETER POST TOTAL PROJECT	SHEET No	TOTAL SHEETS
04	Ala	80	1.6/2.7	509 R1	643

REGISTERED ELECTRICAL ENGINEER 05/15/06 DATE

1-29-07
PLANS APPROVAL DATE

PB POWER, Inc.
A Parsons Brinckerhoff Company
303 Second St., Suite 700N
San Francisco, CA 94107-1317

REGISTERED PROFESSIONAL ENGINEER JENS ERLINGSSON No. 8249 Exp. 9/30/08 ELECTRICAL STATE OF CALIFORNIA

The State of California or its officers or agents shall not be responsible for the accuracy or completeness of electronic copies of this plan sheet.

To get to the Caltrans web site, go to http://www.dot.ca.gov

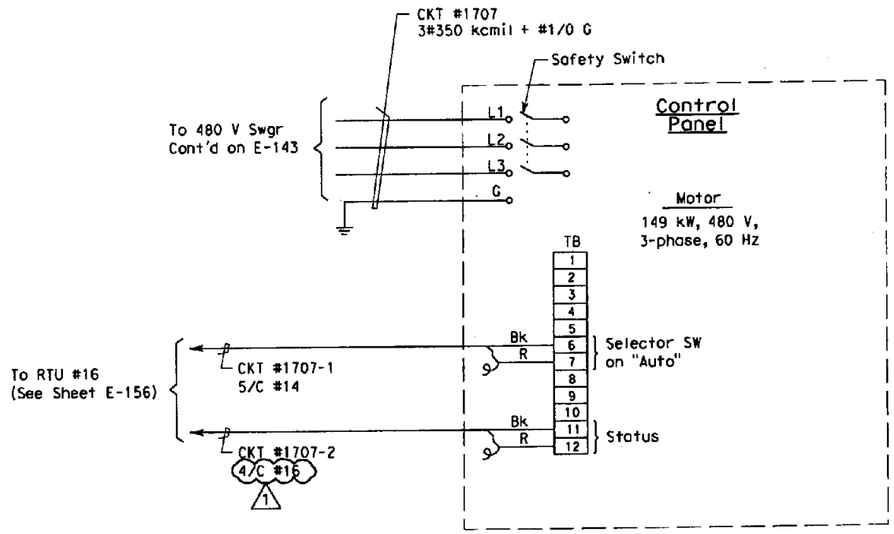

AIR COMPRESSOR AC-1

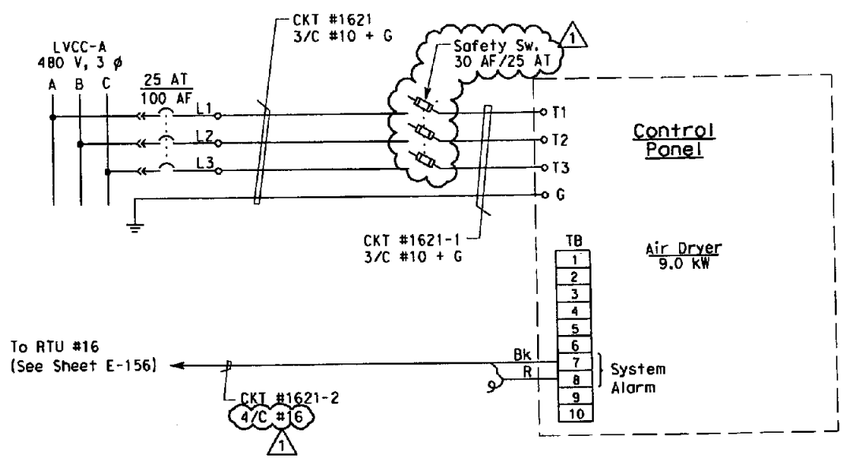

AIR DRYER AD-1

NOTES:

1. References:
   - For Mechanical equipment schedule, see mechanical drawings.
   - For 480 V switchgear single line diagram, see sheet E-126.
   - For LVCC-A single line diagram, see sheet E-130.
   - For RTU #16 connection diagram, see sheet E-156
   - For conduit/tray schedule, see sheets starting at E-224.

REGISTERED PROFESSIONAL ENGINEER DAVID H. OTO No. 10699 Exp. 06/30/2011 ELECTRICAL STATE OF CALIFORNIA

MARK	DATE	DESCRIPTIONS	REV	CK	CCO No.
1	1/29/10	Revised cable from 3/C #16 to 4/C #16 and add safety sw trip rating	RSB	EJL	Conductor Change/ Misc

REVISIONS

CONTRACT CHANGE ORDER NO. 146
SHEET 10 OF 50

DETAILS
MOLE SUBSTATION ELECTRICAL
480 V MISCELLANEOUS ELEMENTARY DIAGRAM
NO SCALE

E-138

DATE	REVISED BY	DATE	REVISED
2/06	FK	2/06	

CALCULATED/DESIGNED BY: AB
CHECKED BY:

DESIGN OVERSIGHT: BEHZAD GOLEMOHAMMADI

STATE OF CALIFORNIA - DEPARTMENT OF TRANSPORTATION
Caltrans

LAST REVISION 00-00-00
DATE PLOTTED => 2/2/2010
TIME PLOTTED => 11:30:11 PM

FOR REDUCED PLANS ORIGINAL SCALE IS IN MILLIMETERS 0 20 40 60 80

DGN FILE =>T:\13103\MS\pse\OTO-Contract 1\CCO\Electrical\CCO-Conductor change & misc\40120luq138r1.dgn
USERNAME =>llorico
CU 04251
EA 0120L1

DIST	COUNTY	ROUTE	KILOMETER POST TOTAL PROJECT	SHEET No.	TOTAL SHEETS
04	Ala	80	1.6/2.7	510 R1	643

REGISTERED ELECTRICAL ENGINEER 05/15/06 DATE

1-29-07
PLANS APPROVAL DATE

REGISTERED PROFESSIONAL ENGINEER JENS ERLINGSSON No. 8249 Exp. 9/30/08 ELECTRICAL STATE OF CALIFORNIA

PB POWER, Inc.
A Parsons Brinckerhoff Company
303 Second St., Suite 700N
San Francisco, CA 94107-1317

The State of California or its officers or agents shall not be responsible for the accuracy or completeness of electronic copies of this plan sheet.

To get to the Caltrans web site, go to http://www.dot.ca.gov

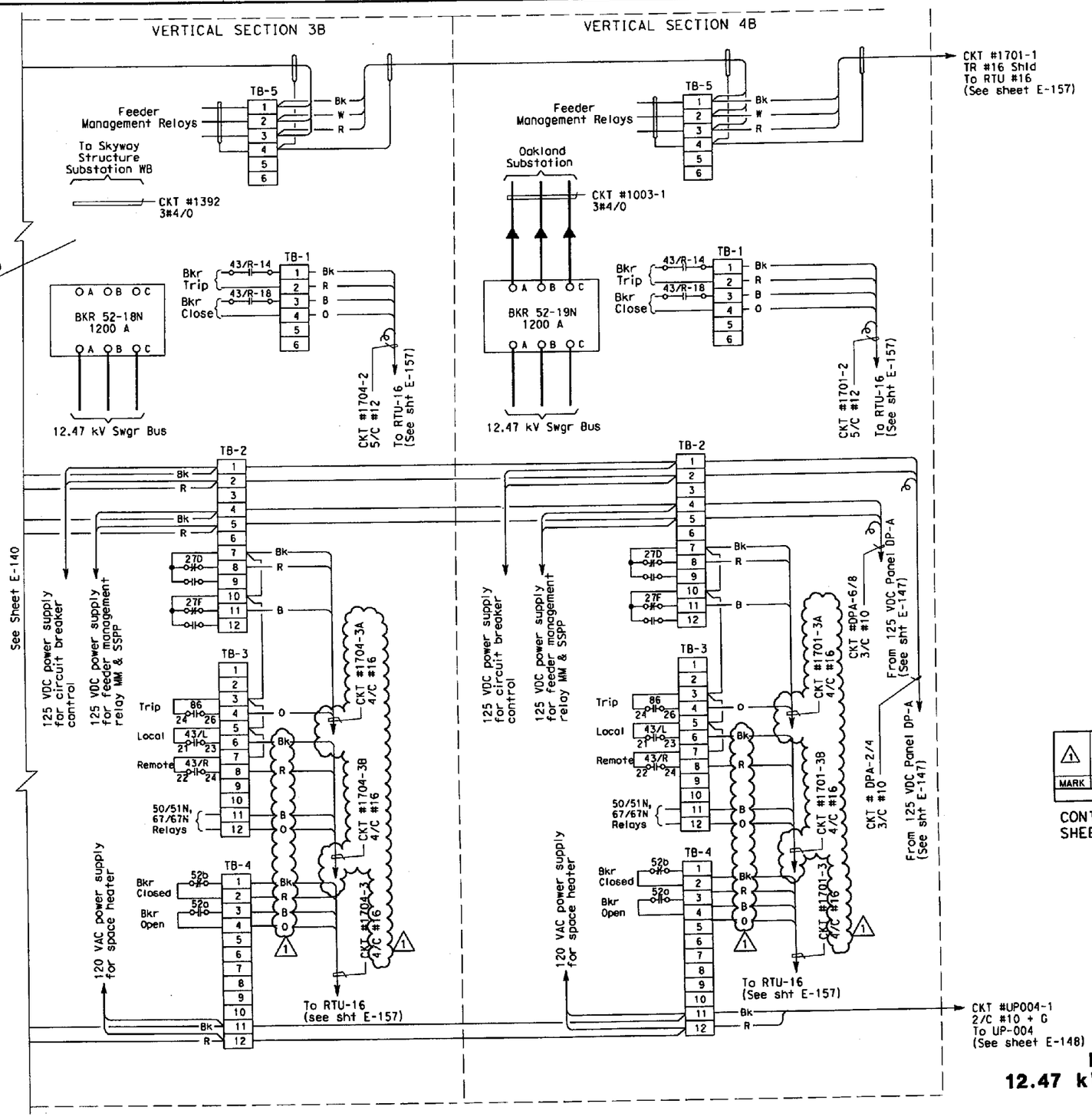

12.47 kV SWITCHGEAR CIRCUIT BREAKERS

NOTES:

1. Each spare conductor shall be coiled and taped at the end of each conductor unless terminated.
2. References:
   - For elementary diagram of 12.47 kV switchgear breakers, see sheet E-127.
   - For single line diagram, see sheet E-126.
   - For conduit/cable tray schedule, see sheets starting at E-224.

MARK	DATE	DESCRIPTIONS	REV	CK	CCO No.
1	1/29/10	Revised cable from 12/c #16 to 4/c #16. Added cable/circuit numbers.	RSB	EJL	Conductor Change/ Misc

REVISIONS

CONTRACT CHANGE ORDER NO. 146
SHEET 11 OF 50

REGISTERED PROFESSIONAL ENGINEER DAVID H. OTO No. 10699 Exp. 06/30/2011 ELECTRICAL STATE OF CALIFORNIA

DETAILS
MOLE SUBSTATION ELECTRICAL
12.47 kV SWITCHGEAR CONNECTION DIAGRAM
NO SCALE

E-139

STATE OF CALIFORNIA - DEPARTMENT OF TRANSPORTATION	DESIGN OVERSIGHT	CALCULATED/ DESIGNED BY	AB
Caltrans	BEHZAD GOLEMOHAMMADI	CHECKED BY	FK
		DATE	2/06
		REVISED BY	
		DATE REVISED	

LAST REVISION 00-00-00 | DATE PLOTTED => 2/2/2010 | TIME PLOTTED => 1:30:31 PM

FOR REDUCED PLANS ORIGINAL SCALE IS IN MILLIMETERS 0 20 40 60 80

DGN FILE =>T:\13103\WS\pse\OTO-Contract 1\CCO\Electrical\CCO-Conductor change & misc\401201ud139r1.dgn
USERNAME =>llorico

CU 04251 | EA 0120L1

DIST	COUNTY	ROUTE	KILOMETER POST TOTAL PROJECT	SHEET No	TOTAL SHEETS
04	Ala	80	1.6/2.7	511 R1	643

REGISTERED ELECTRICAL ENGINEER 05/15/06 DATE

1-29-07
PLANS APPROVAL DATE

REGISTERED PROFESSIONAL ENGINEER JENS ERLINGSSON No. 8249 Exp. 9/30/08 ELECTRICAL STATE OF CALIFORNIA

PB POWER, Inc.
A Parsons Brinckerhoff Company
303 Second St., Suite 700N
San Francisco, CA 94107-1317

The State of California or its officers or agents shall not be responsible for the accuracy or completeness of electronic copies of this plan sheet.

To get to the Caltrans web site, go to http://www.dot.ca.gov

Caltrans Metric

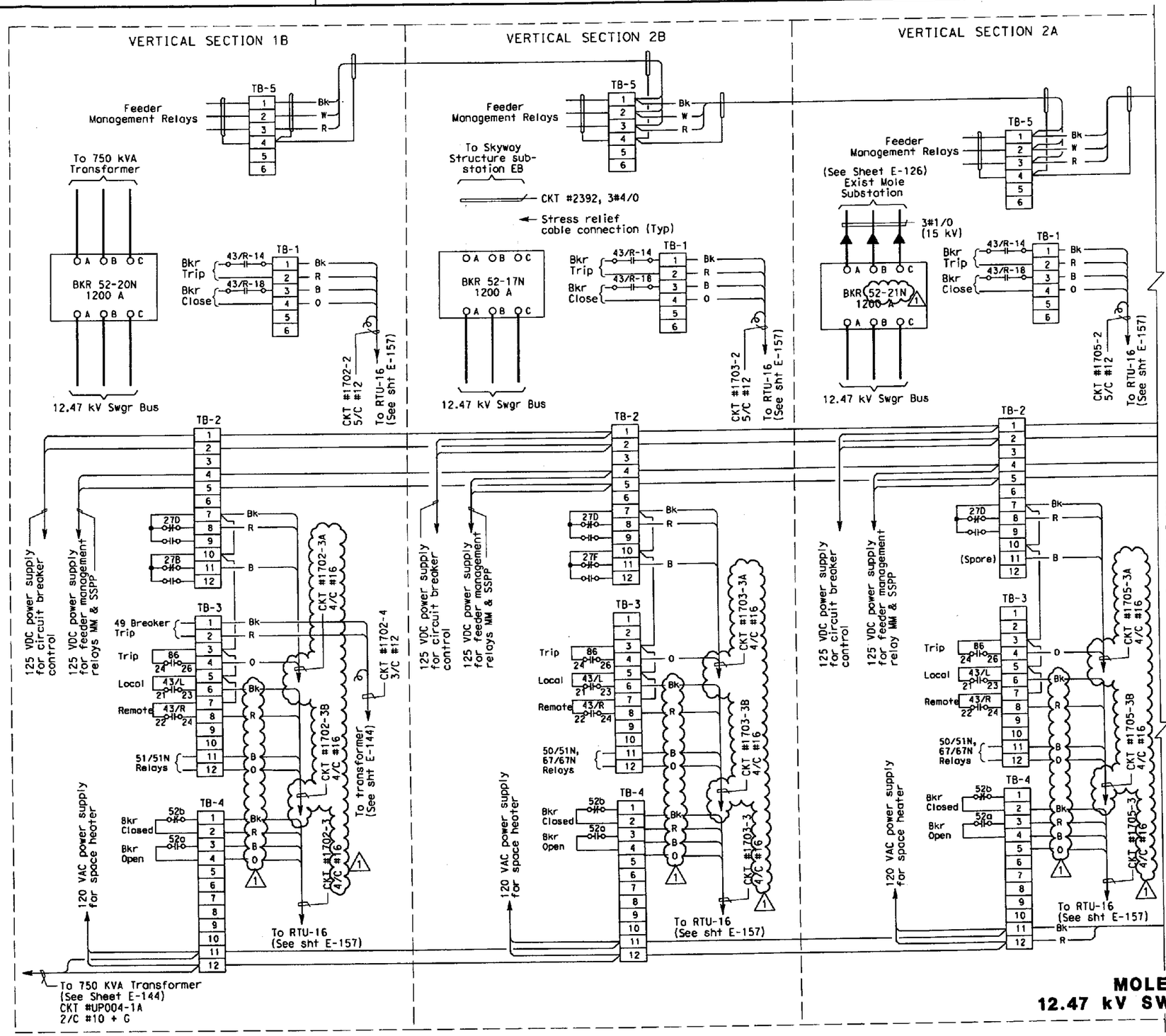

12.47 kV SWITCHGEAR CIRCUIT BREAKERS

NOTES:

1. Each spare conductors shall be coiled and taped at the end of each conductor unless terminated.
2. References:
   - For elementary diagram of 12.47 kV switchgear. breakers, see sheet E-127.
   - For single line diagram, see sheet E-126.
   - For conduit/cable tray schedule, see sheets starting at E-224.

REGISTERED PROFESSIONAL ENGINEER DAVID H. OTO No. 10699 Exp. 06/30/2011 ELECTRICAL STATE OF CALIFORNIA

MARK	DATE	DESCRIPTIONS	REV	CK	CCO No.
1	1/29/10	Revised cable from 12/C #16 to 4/C #16. Added cable/circuit numbers. Revised breaker No.	RSB	EJL	Conductor Change/ Misc

REVISIONS

CONTRACT CHANGE ORDER NO. 146
SHEET 12 OF 50

DETAILS
MOLE SUBSTATION ELECTRICAL
12.47 kV SWITCHGEAR CONNECTION DIAGRAM
NO SCALE

E-140

STATE OF CALIFORNIA - DEPARTMENT OF TRANSPORTATION
Caltrans

DESIGN OVERSIGHT: BEHZAD GOLEMOHAMMADI

CALCULATED/ DESIGNED BY	CHECKED BY	REVISED BY	DATE REVISED
AB	FK		
DATE 2/06	2/06		

LAST REVISION 00-00-00 DATE PLOTTED => 2/2/2010 TIME PLOTTED => 1:30:46 PM

FOR REDUCED PLANS ORIGINAL SCALE IS IN MILLIMETERS 0 20 40 60 80

DGN FILE =>T:\13103\MS\pse\OTD-Contract 1\CCO\Electrical\CCO-Conductor change & misc\40120lud140r1.dgn
USERNAME =>llorica

CU 04251 EA 0120L1

DIST	COUNTY	ROUTE	KILOMETER POST TOTAL PROJECT	SHEET No	TOTAL SHEETS
04	Ala	80	1.6/2.7	512 R2	643

REGISTERED ELECTRICAL ENGINEER 05/15/06 DATE

1-29-07
PLANS APPROVAL DATE

REGISTERED PROFESSIONAL ENGINEER JENS ERLINGSSON No. 8249 Exp. 9/30/08 ELECTRICAL STATE OF CALIFORNIA

PB POWER, Inc.
A Parsons Brinckerhoff Company
303 Second St., Suite 700N
San Francisco, CA 94107-1317

The State of California or its officers or agents shall not be responsible for the accuracy or completeness of electronic copies of this plan sheet.

To get to the Caltrans web site, go to http://www.dot.ca.gov

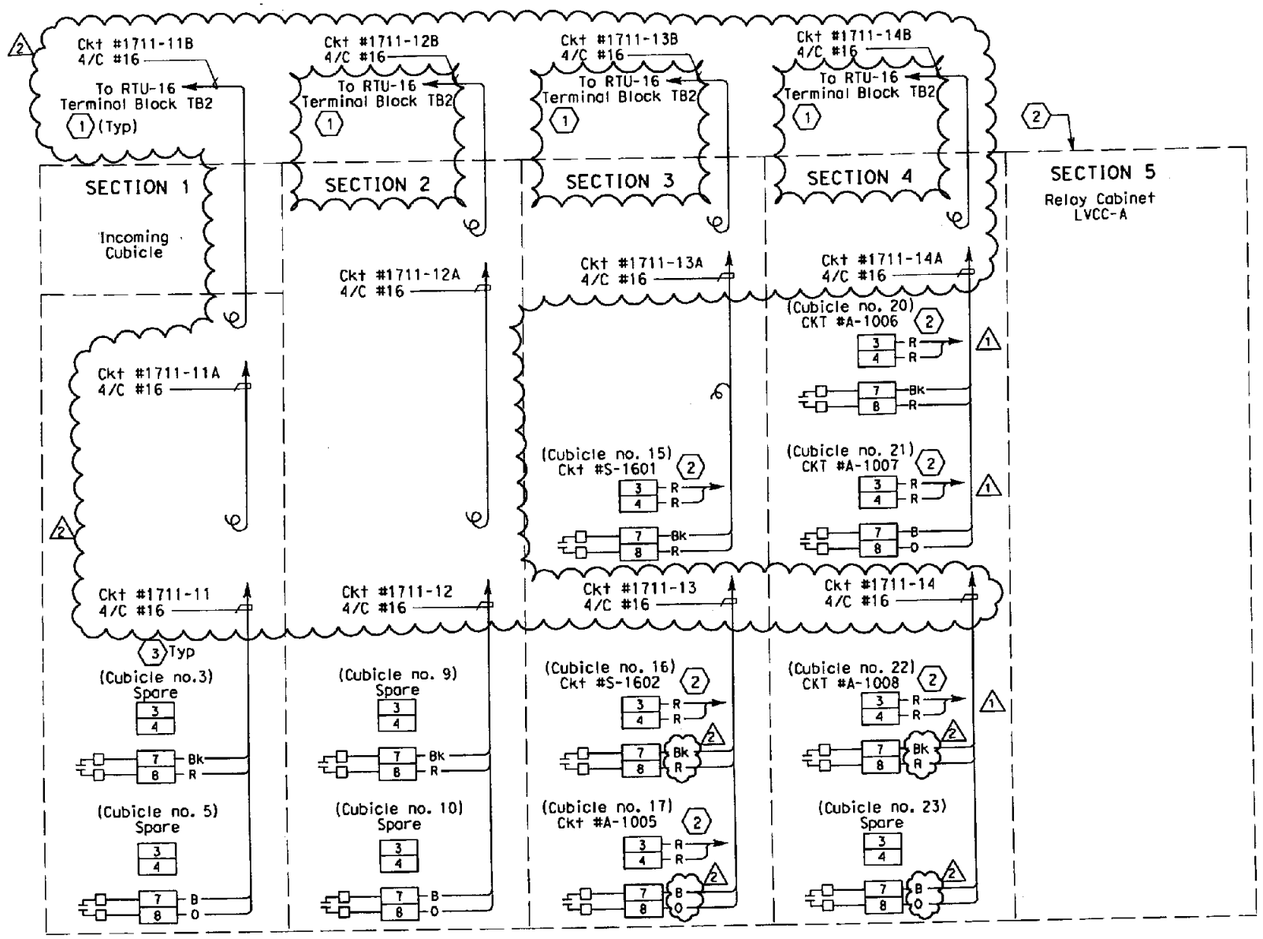

LVCC-A TO RTU-16 CONNECTION DIAGRAM

SHEET NOTES:

1. For connection to RTU#16, see sheet E-156.
2. For connection diagram of LVCC-A Relay Cabinet, see sheet E-145 (2#14)
3. For LVCC-A elevation and schedules, see sheet E-131.

NOTES:

1. Each spare conductor shall be coiled and taped at conductor ends unless terminated.
2. References:
   - For LVCC-A single line diagram, see sheet E-130.
   - For conduit/cable tray schedule, see sheets starting at E-224.
   - For LVCC-A relay cabinet elementary diagram, see sheet E-134.

REGISTERED PROFESSIONAL ENGINEER DAVID H. OTO No. 10699 Exp. 06/30/2011 ELECTRICAL STATE OF CALIFORNIA

REGISTERED PROFESSIONAL ENGINEER FADI WALIEDDINE No. 11465 Exp. 12/31/2009 ELECTRICAL STATE OF CALIFORNIA

MARK	DATE	DESCRIPTIONS	REV	CK	CCO NO.
2	1/29/10	Revised cable from 9/c #16 to 4/c #16. Added cable/circuit numbers.	RSB	EJL	Conductor Change/ Misc.
1	8/29/08	Added Ckt #A-1006, A-1007, A-1008	MP	EJL	Light Pipe

REVISIONS

CONTRACT CHANGE ORDER NO. 146
SHEET 13 OF 50

DETAILS
MOLE SUBSTATION ELECTRICAL
LVCC-A CONNECTION DIAGRAM
NO SCALE

E-141

CALCULATED/ DESIGNED BY	AB	DATE 2/06	REVISED BY	DATE REVISED
CHECKED BY	FK	2/06		

DESIGN OVERSIGHT
BEHZAD GOLEMOHAMMADI

STATE OF CALIFORNIA - DEPARTMENT OF TRANSPORTATION
Caltrans

LAST REVISION 00-00-00
DATE PLOTTED => 2/2/2010
TIME PLOTTED => 1:31:02 PM

FOR REDUCED PLANS ORIGINAL SCALE IS IN MILLIMETERS 0 20 40 60 80

DGN FILE =>T:\13103\MS\pse\OTD-Contract 1\CCO\Electrical\CCO-Conductor change & misc\401201ud141r2.dgn
USERNAME =>llorico

CU 04251 | EA 0120L1

DIST	COUNTY	ROUTE	KILOMETER POST TOTAL PROJECT	SHEET No	TOTAL SHEETS
04	Ala	80	1.6/2.7	513 R2	643

REGISTERED ELECTRICAL ENGINEER 05/15/06 DATE

1-29-07
PLANS APPROVAL DATE

REGISTERED PROFESSIONAL ENGINEER JENS ERLINGSSON No. 8249 Exp. 9/30/08 ELECTRICAL STATE OF CALIFORNIA

PB POWER, Inc.
A Parsons Brinckerhoff Company
303 Second St., Suite 700N
San Francisco, CA 94107-1317

The State of California or its officers or agents shall not be responsible for the accuracy or completeness of electronic copies of this plan sheet.

To get to the Caltrans web site, go to http://www.dot.ca.gov

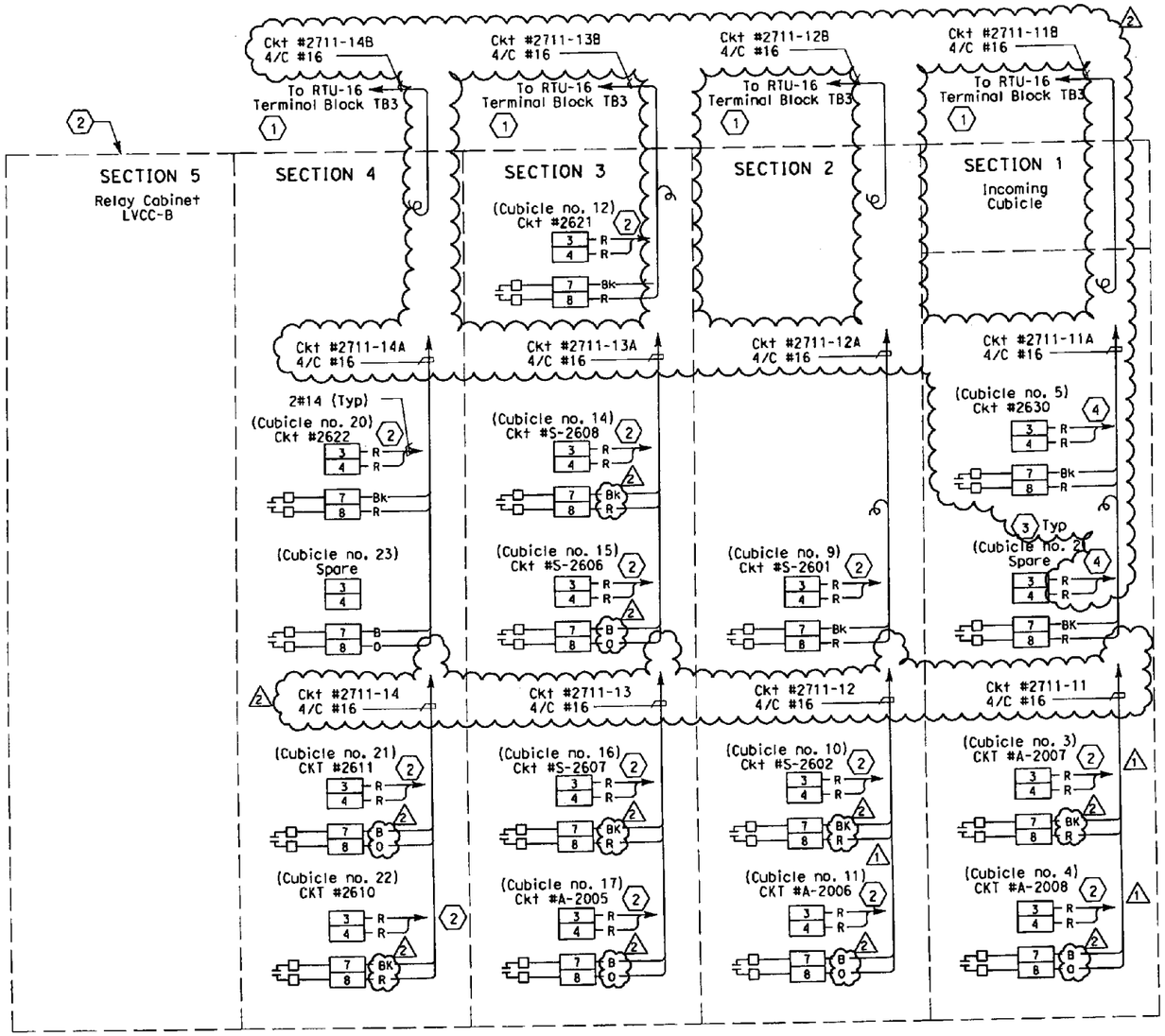

LVCC-B TO RTU-16 CONNECTION DIAGRAM

SHEET NOTES:

1. For connection to RTU#16, see sheet E-156.
2. For connection diagram of LVCC-B Relay Cabinet, see sheet E-146.
3. For LVCC-B elevotion and schedules, see sheet E-133.
4. Field to add new wiring to LVCC-B relay cabinet, see sheet E-146. Match existing.

NOTES:

1. Each spare conductor shall be coiled and taped at conductor ends unless terminated.
2. References:
   - For LVCC-B single line diagram, see sheet E-132.
   - For conduit/cable tray schedule, see sheets starting at E-224.
   - For LVCC-B relay cabinet elementary diagram, see sheet E-135.

REGISTERED PROFESSIONAL ENGINEER DAVID H. OTO No. 10699 Exp. 06/30/2011 ELECTRICAL STATE OF CALIFORNIA

REGISTERED PROFESSIONAL ENGINEER FADI WALIEDDINE No. 11465 Exp. 12/31/2009 ELECTRICAL STATE OF CALIFORNIA

MARK	DATE	DESCRIPTIONS	REV	CK	CCO NO.
2	1/29/10	Revised cable from 9/c #16 and 12/c #16 to 4/c #16. Added cable/circuit numbers, LVCC-B inside wiring and sheet notes 4.	RSB	EJL	Conductor Change/ Misc.
1	8/29/08	Added Ckt# A-2007, A-2008. Revised cubicle No.	MP	EJL	Light Pipe

REVISIONS

CONTRACT CHANGE ORDER NO. 146
SHEET 14 OF 50

DETAILS
MOLE SUBSTATION ELECTRICAL
LVCC-B CONNECTION DIAGRAM
NO SCALE

E-142

STATE OF CALIFORNIA - DEPARTMENT OF TRANSPORTATION
Caltrans

DESIGN OVERSIGHT: BEHZAD GOLEMOHAMMADI

CALCULATED/ DESIGNED BY	AB	DATE 2/06	REVISED BY	DATE REVISED
CHECKED BY	FK	2/06		

LAST REVISION 00-00-00 | DATE PLOTTED => 2/2/2010 TIME PLOTTED => 1:31:34 PM

FOR REDUCED PLANS ORIGINAL SCALE IS IN MILLIMETERS 0 20 40 60 80

DGN FILE =>T:\13103\WS\pse\OTD-Contract 1\CCO\Electrical\CCO-Conductor change & misc\40120lud142r2.dgn
USERNAME =>llorico

CU 04251 | EA 0120L1

DIST	COUNTY	ROUTE	KILOMETER POST TOTAL PROJECT	SHEET No	TOTAL SHEETS
04	Ala	80	1.6/2.7	515 R1	643

REGISTERED ELECTRICAL ENGINEER 05/15/06 DATE

1-29-07
PLANS APPROVAL DATE

REGISTERED PROFESSIONAL ENGINEER JENS ERLINGSSON No. 6249 EXP. 9/30/08 ELECTRICAL STATE OF CALIFORNIA

PB POWER, Inc.
A Parsons Brinckerhoff Company
303 Second St., Suite 700N
San Francisco, CA 94107-1317

The State of California or its officers or agents shall not be responsible for the accuracy or completeness of electronic copies of this plan sheet.

To get to the Caltrans web site, go to http://www.dot.ca.gov

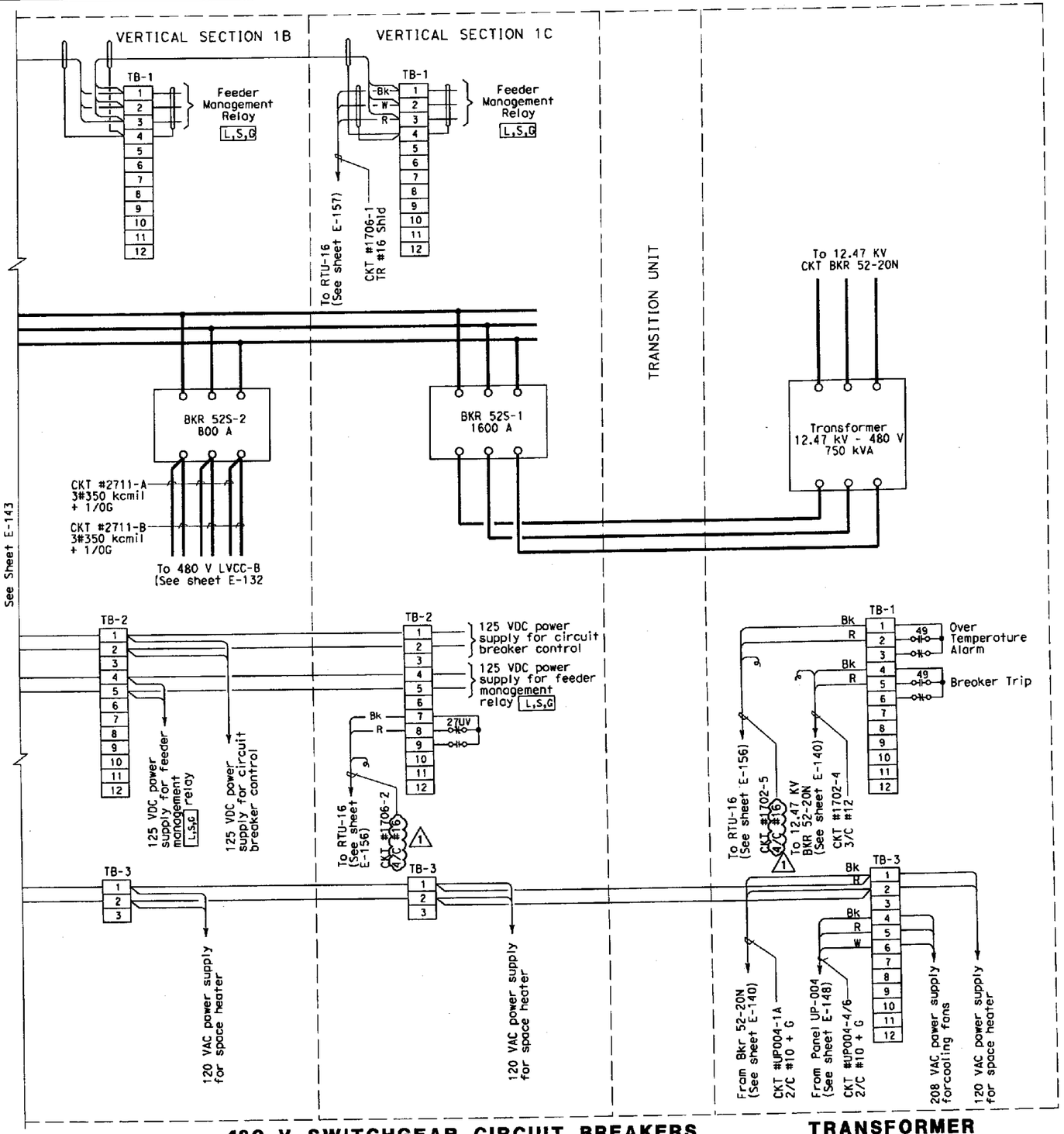

NOTES:

1. Each spare conductor shall be coiled and taped at the end of each conductor unless terminated.
2. References:
   - For elementary diagram of 480 V switchgear breakers, see sheet E-128.
   - For single line diagram, see sheet E-126.
   - For conduit / cable tray schedules, see sheets starting at E-224.

REGISTERED PROFESSIONAL ENGINEER DAVID H. OTO No. 10699 EXP. 06/30/2011 ELECTRICAL STATE OF CALIFORNIA

MARK	DATE	DESCRIPTIONS	REV	CK	CCO No.
1	1/29/10	Revised cable from 3/c #16 to 4/c #16.	RSB	EJL	Conductor Change/ Misc
		REVISIONS			

CONTRACT CHANGE ORDER NO. 146
SHEET 15 OF 50

DETAILS
MOLE SUBSTATION ELECTRICAL TRANSFORMER AND 480 V SWITCHGEAR CONNECTION DIAGRAM
NO SCALE

E-144

DATE	REVISED BY	DATE	REVISED
2/06		2/06	

CALCULATED/DESIGNED BY: AB
CHECKED BY: FK

DESIGN OVERSIGHT: BEHZAD GOLEMOHAMMADI

STATE OF CALIFORNIA - DEPARTMENT OF TRANSPORTATION
Caltrans

LAST REVISION 00-00-00
DATE PLOTTED => 2/2/2010
TIME PLOTTED => 1:31:55 PM

FOR REDUCED PLANS ORIGINAL SCALE IS IN MILLIMETERS 0 20 40 60 80

DGN FILE =>T:\13103\WS\pse\OTD-Contract 1\CCO\Electrical\CCO-Conductor change & misc\40120lud144r1.dgn
USERNAME =>liorico

CU 04251 | EA 0120L1

DIST	COUNTY	ROUTE	KILOMETER POST TOTAL PROJECT	SHEET No.	TOTAL SHEETS
04	Ala	80	1.6/2.7	517 R2	643

REGISTERED ELECTRICAL ENGINEER 05/15/06 DATE

1-29-07
PLANS APPROVAL DATE

REGISTERED PROFESSIONAL ENGINEER JENS ERLINGSSON No. 8249 Exp. 9/30/08 ELECTRICAL STATE OF CALIFORNIA

PB POWER, Inc.
A Parsons Brinckerhoff Company
303 Second St., Suite 700N
San Francisco, CA 94107-1317

The State of California or its officers or agents shall not be responsible for the accuracy or completeness of electronic copies of this plan sheet.

To get to the Caltrans web site, go to http://www.dot.ca.gov

Caltrans Metric

REGISTERED PROFESSIONAL ENGINEER FADI WALIEDDINE No. 11465 Exp. 12/31/2009 ELECTRICAL STATE OF CALIFORNIA

REGISTERED PROFESSIONAL ENGINEER DAVID H. OTO No. 10699 Exp. 06/30/2011 ELECTRICAL STATE OF CALIFORNIA

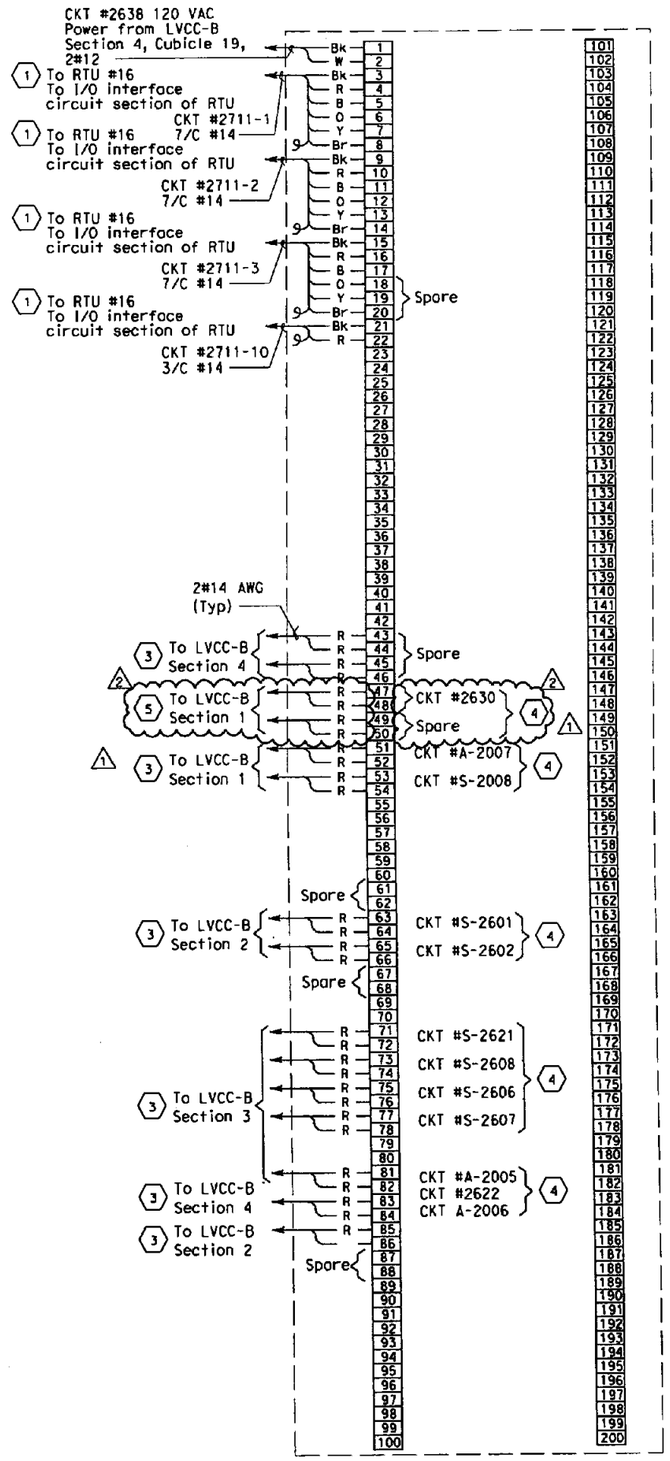

LVCC-B RELAY CABINET TERMINALS CONNECTION DIAGRAM

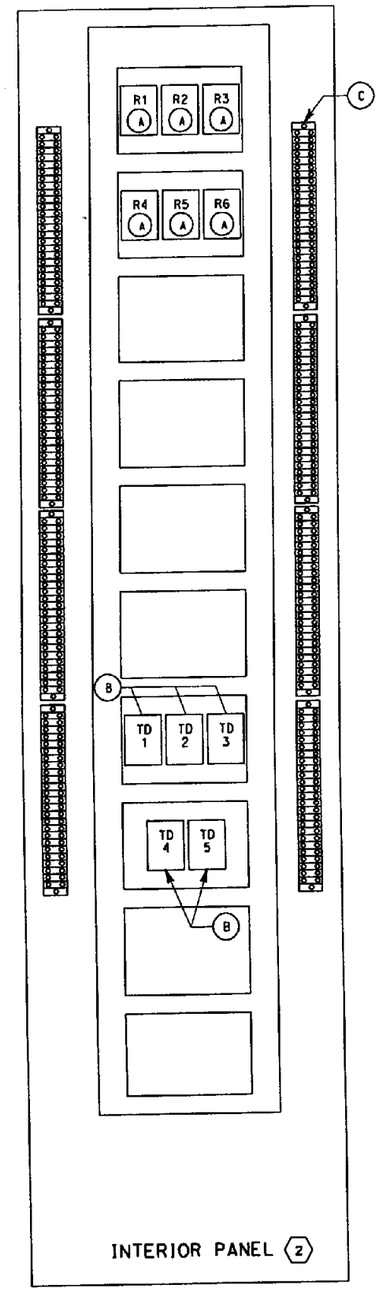

LVCC-B RELAY CABINET ARRANGEMENT

SHEET NOTES:

(1) For connection diagram to RTU #16, see sheet E-156.

(2) Interior panel is mounted inside LVCC-B relay cabinet as part of the 480 V LVCC line up.

(3) For continuation, see sheet E-142.

(4) For relay cabinet elementary, see sheet E-135.

(5) Field to add new wiring to LVCC-B cubicle 5, see sheet E-142. Match Existing.

NOTES:

1. Each spare conductors shall be coiled and taped at conductor ends unless terminated.
2. References:
   - For typical 480 V elementary diagram, see sheets E-136.
   - For LVCC-B relay cabinet elementary diagram, see sheet E-135.
   - For LVCC-B elevation and schedules, see sheet E-133.
   - For conduit/cable tray schedules, See sheets starting at E-224.
   - For LVCC-B connection diagram, see sheet E-142.
   - For typical relay wiring diagram, see sheet E-155.

MATERIAL LIST

ITEM	DESCRIPTION	QUANTITY
(A)	Relay, general purpose, 120 VAC coil, (2.0 VOLT-AMPS) 4PDT, contact rating: 10 A (Type IV Relay)	6
(B)	Relay, timing (on delay), 120 VAC coil, adj. range: 0.5-30 sec. 2PDT, 10 A contacts (Type V Relay)	5
(C)	Terminal blocks, rated 600 V, 20 A barrier type with screw terminals	200 points

MARK	DATE	DESCRIPTIONS	REV	CK	CCO NO.
2	1/29/10	Added LVCC-B inside wiring and sheet notes 5.	RSB	EJL	Conductor Change/ Misc.
1	8/29/08	Added CKT #A-2007, A-2008	MP	EJL	Light Pipe

REVISIONS

CONTRACT CHANGE ORDER NO. 146
SHEET 16 OF 50

DETAILS
MOLE SUBSTATION ELECTRICAL
LVCC-B RELAY CABINET ARRANGEMENT AND CONNECTION DIAGRAM
NO SCALE

E-146

STATE OF CALIFORNIA - DEPARTMENT OF TRANSPORTATION
Caltrans

DESIGN OVERSIGHT: BEHZAD GOLEMOHAMMADI

CALCULATED/DESIGNED BY: AB DATE 2/06 REVISED BY
CHECKED BY: FK 2/06 DATE REVISED

LAST REVISION 00-00-00
DATE PLOTTED => 2/2/2010
TIME PLOTTED => 1:32:14 PM

FOR REDUCED PLANS ORIGINAL SCALE IS IN MILLIMETERS 0 20 40 60 80

DGN FILE =>T:\13103\MS\pse\OTD-Contract 1\CCO\Electrical\CCO-Conductor change & misc\401201ud146R2.dgn
USERNAME =>llorico

CU 04251 EA 0120L1

DIST	COUNTY	ROUTE	KILOMETER POST TOTAL PROJECT	SHEET No	TOTAL SHEETS
04	Ala	80	1.6/2.7	518 R1	643

REGISTERED ELECTRICAL ENGINEER 05/15/06 DATE

1-29-07
PLANS APPROVAL DATE

REGISTERED PROFESSIONAL ENGINEER JENS ERLINGSSON No. 8249 Exp. 9/30/08 ELECTRICAL STATE OF CALIFORNIA

PB POWER, Inc.
A Parsons Brinckerhoff Company
303 Second St., Suite 700N
San Francisco, CA 94107-1317

The State of California or its officers or agents shall not be responsible for the accuracy or completeness of electronic copies of this plan sheet.

To get to the Caltrans web site, go to: http://www.dot.ca.gov

Caltrans Metric

125 VDC PANEL DP-A (CKT #1651-1 and CKT #1651-2)

Location: MOLE SUBSTATION

LOAD DESCRIPTION	TOTAL (WATTS) (+)	TOTAL (WATTS) (-)	CB		CB	TOTAL (WATTS) (+)	TOTAL (WATTS) (-)	
480 V Swgr Breakers	1000		30 / 1	1 P 2	30 / 1	1000		12.47 kV Swgr Breakers
	1000		2	3 N 4	2	1000		
480 V Swgr Feeder Management Relays	15		30 / 1	5 P 6	30 / 1	15		12.47 kV Swgr Feeder Management Relays
	15		2	7 N 8	2	15		
Spare			20	9 P 10	20			Spare
			2	11 N 12	2			
Spare			20	13 P 14	20			Spare
			2	15 N 16	2			
Spare			20	17 P 18	20			Spare
			2	19 N 20	2			
Spare			20	21 P 22	20			Spare
			2	23 N 24	2			
TOTAL WATTS	2030					2030		TOTAL WATTS

VOLTAGE: 125 VDC
PHASE/WIRES: 2-wire
BUS RATING: 100 A
MAIN: 50 A
MOUNTING: Surface
K.A.I.C.: 10 (DC Rated)

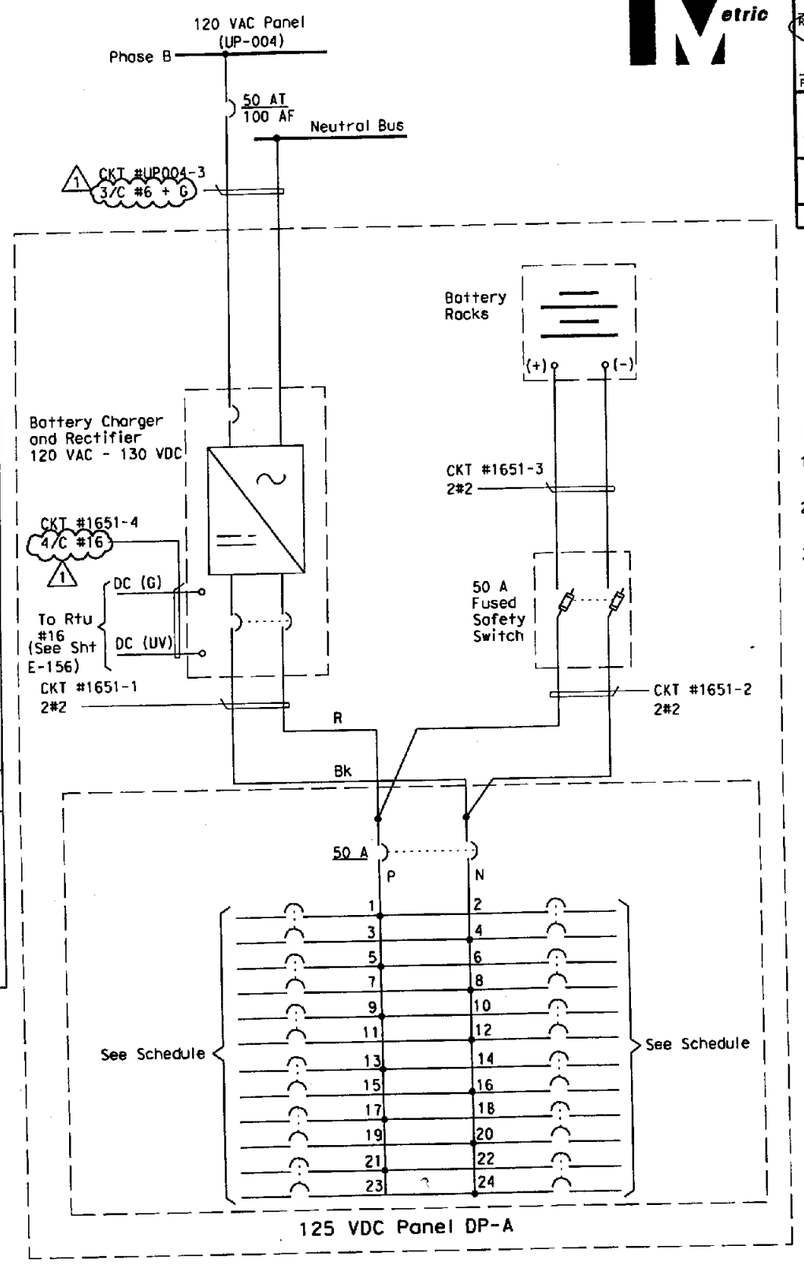

NOTES:

1. Contractor shall provide Nameplates and Circuit Schedules as shown.
2. For conduit/cable tray schedules, see sheets starting at E-224.
3. For panel UP-004 schedule, see sheet E-148.

REGISTERED PROFESSIONAL ENGINEER DAVID H. OTD No. 10699 Exp. 06/30/2011 ELECTRICAL STATE OF CALIFORNIA

MARK	DATE	DESCRIPTIONS	REV	CK	CCO No.
1	1/29/10	Revised cable from 3/C #16 to 4/C #16, 2/C #6 + G to 3/C #6 + G. Changed breaker size from 20 A to 30 A.	RSB	EJL	Conductor Change/ Misc

REVISIONS

CONTRACT CHANGE ORDER NO. 146
SHEET 17 OF 50

DETAILS
MOLE SUBSTATION ELECTRICAL PANEL DP-A SCHEDULE
NO SCALE

E-147

STATE OF CALIFORNIA - DEPARTMENT OF TRANSPORTATION
Caltrans

DESIGN OVERSIGHT: BEHZAD GOLEMOHAMMADI
CALCULATED/DESIGNED BY: AB | CHECKED BY: FK
DATE REVISED: 2/06 | REVISED BY:

LAST REVISION 00-00-00
DATE PLOTTED => 2/2/2010
TIME PLOTTED => 1:32:35 PM

FOR REDUCED PLANS ORIGINAL SCALE IS IN MILLIMETERS 0 20 40 60 80

DGN FILE =>T:\13103\WS\pse\OTD-Contract 1\CCO\Electrical\CCO-Conductor change & misc\401201ud147r1.dgn
USERNAME =>llorico

CU 04251 | EA 0120L1

DIST	COUNTY	ROUTE	KILOMETER POST TOTAL PROJECT	SHEET No	TOTAL SHEETS
04	Ala	80	1.6/2.7	522 R1	643

REGISTERED ELECTRICAL ENGINEER 05/15/06 DATE

1-29-07
PLANS APPROVAL DATE

REGISTERED PROFESSIONAL ENGINEER JENS ERLINGSSON No. 8249 Exp. 9/30/08 ELECTRICAL STATE OF CALIFORNIA

PB POWER, Inc.
A Parsons Brinckerhoff Company
303 Second St., Suite 700N
San Francisco, CA 94107-1317

The State of California or its officers or agents shall not be responsible for the accuracy or completeness of electronic copies of this plan sheet.

To get to the Caltrans web site, go to: http://www.dot.ca.gov

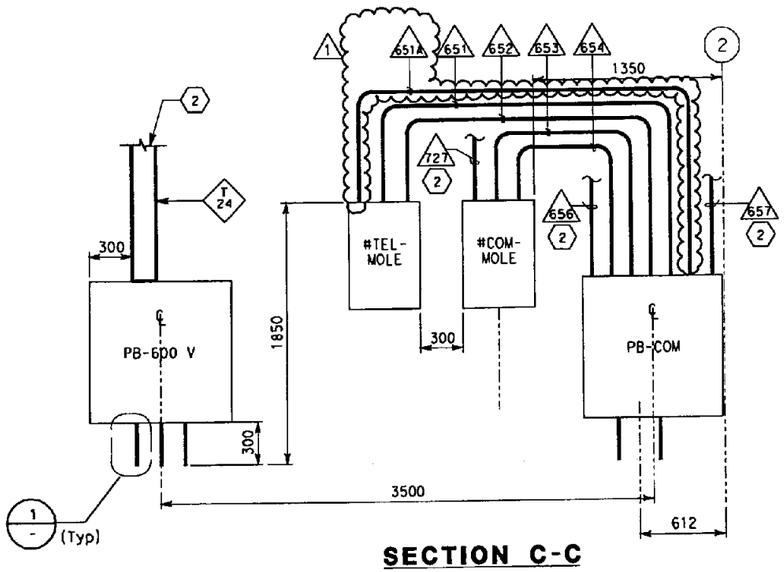

SECTION C-C
SCALE: 1:20

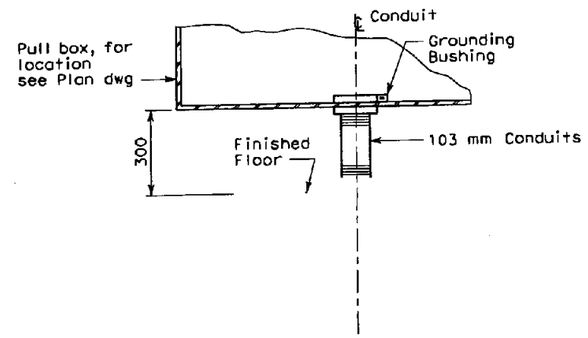

DETAIL 1
NO SCALE

CONDUIT CONNECTION TO PULL BOX

SHEET NOTES:

1. For homeruns to lighting panel LP-A, see sheets AE-2 and AE-3.
2. For continuation, see sheet E-124.

NOTES:

1. References:
   - For locations of conduit stub-ups, see sheet AE-5.
   - For conduit and cable tray plan, see sheet E-124.
   - For equipment arrangement, see sheet E-123.
   - For cable tray support locations, see sheet E-149.
   - For conduit and cable tray sections, see sheet E-150.
   - For cable tray support installations, see sheet E-152.
   - For conduit/cable tray schedules, see sheets starting at E-224.
2. Wall mounted equipment shall be secured to concrete wall with approved expansion anchors.

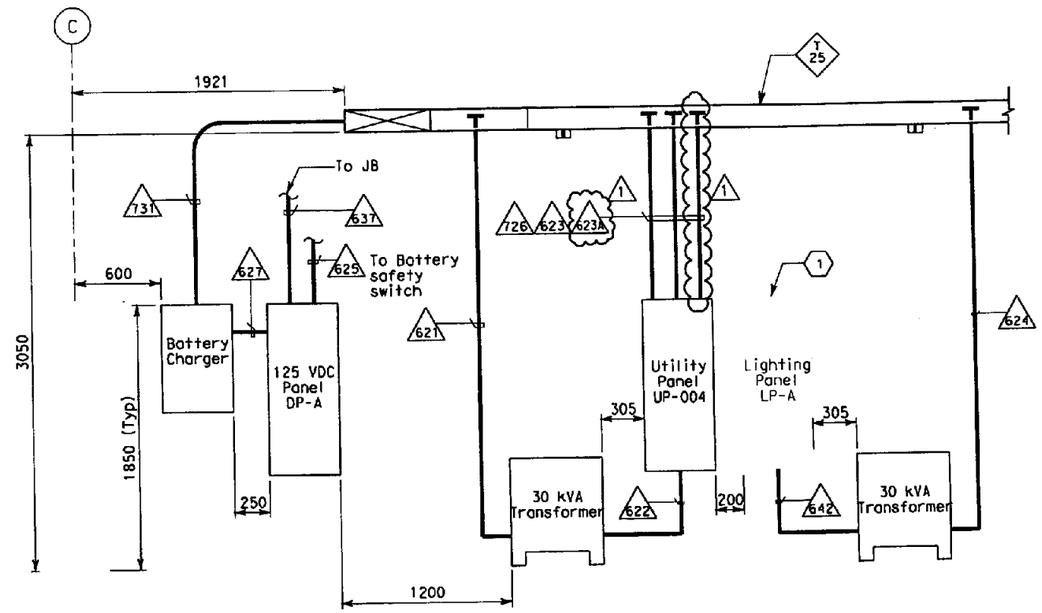

SECTION D-D
SCALE: 1:20

REGISTERED PROFESSIONAL ENGINEER DAVID H. OTO No. 10699 Exp. 06/30/2011 ELECTRICAL STATE OF CALIFORNIA

MARK	DATE	DESCRIPTIONS	REV	CK	CCO No.
1	1/29/10	Added conduits 651A, 623A. Added conduits not shown 714A, 712A, 713A, 616A, 701A, 702A, 703A.	RSB	EJL	Conductor Change/ Misc

REVISIONS

CONTRACT CHANGE ORDER NO. 146
SHEET 18 OF 50

DETAILS
MOLE SUBSTATION ELECTRICAL SECTIONS
SCALE AS NOTED

E-151

MOLE SUBSTATION MOUNTING DETAILS

ALL DIMENSIONS ARE IN MILLIMETERS UNLESS OTHERWISE SHOWN

THIS PLAN IS ACCURATE FOR ELECTRICAL WORK ONLY.

FOR REDUCED PLANS ORIGINAL SCALE IS IN MILLIMETERS 0 20 40 60 80

DGN FILE =>T:\13103\MS\pse\OTD-Contract 1\CCO\Electrical\CCO-Conductor change & misc\40120lud151r1.dgn
USERNAME =>llorico

CU 04251 | EA 0120L1

DESIGN OVERSIGHT: BEHZAD GOLEMOHAMMADI

CALCULATED/DESIGNED BY: FK | DATE 2/06 | REVISED BY
CHECKED BY: AB | 2/06 | DATE REVISED

STATE OF CALIFORNIA - DEPARTMENT OF TRANSPORTATION
Caltrans

LAST REVISION 00-00-00 | DATE PLOTTED => 2/2/2010 | TIME PLOTTED => 1:32:51 PM

MARK	DATE	DESCRIPTIONS	REV	CK	CCO NO.
4	1/29/10	Changed conductor size to 4/C #16. Added cable/circuits nos.ckt 2630 sheet notes 6.	RSB	EJL	Conductor Change/ Misc.
3	7/31/09	Added new cable and CKT 2507-16	RSB	EJL	Geotech Arrays
2	2/27/09	Added EF-2 input to RTU #16.	DO	EJL	Battery Room
1	8/29/08	Added CKT #A-2007, A-2008, #A-1006, #A-1007, #A-1008	MP	EJL	Light Pipe

REVISIONS

CONTRACT CHANGE ORDER NO. 146
SHEET 19 OF 50

DIST	COUNTY	ROUTE	KILOMETER POST TOTAL PROJECT	SHEET NO	TOTAL SHEETS
04	Alo	80	1.6/2.7	527 R4	643

REGISTERED ELECTRICAL ENGINEER — DATE 05/15/06
1-29-07
PLANS APPROVAL DATE

PB POWER, Inc.
A Parsons Brinckerhoff Company
303 Second St., Suite 700N
San Francisco, CA 94107-1317

The State of California or its officers or agents shall not be responsible for the accuracy or completeness of electronic copies of this plan sheet.

To get to the Caltrans web site, go to: http://www.dot.ca.gov

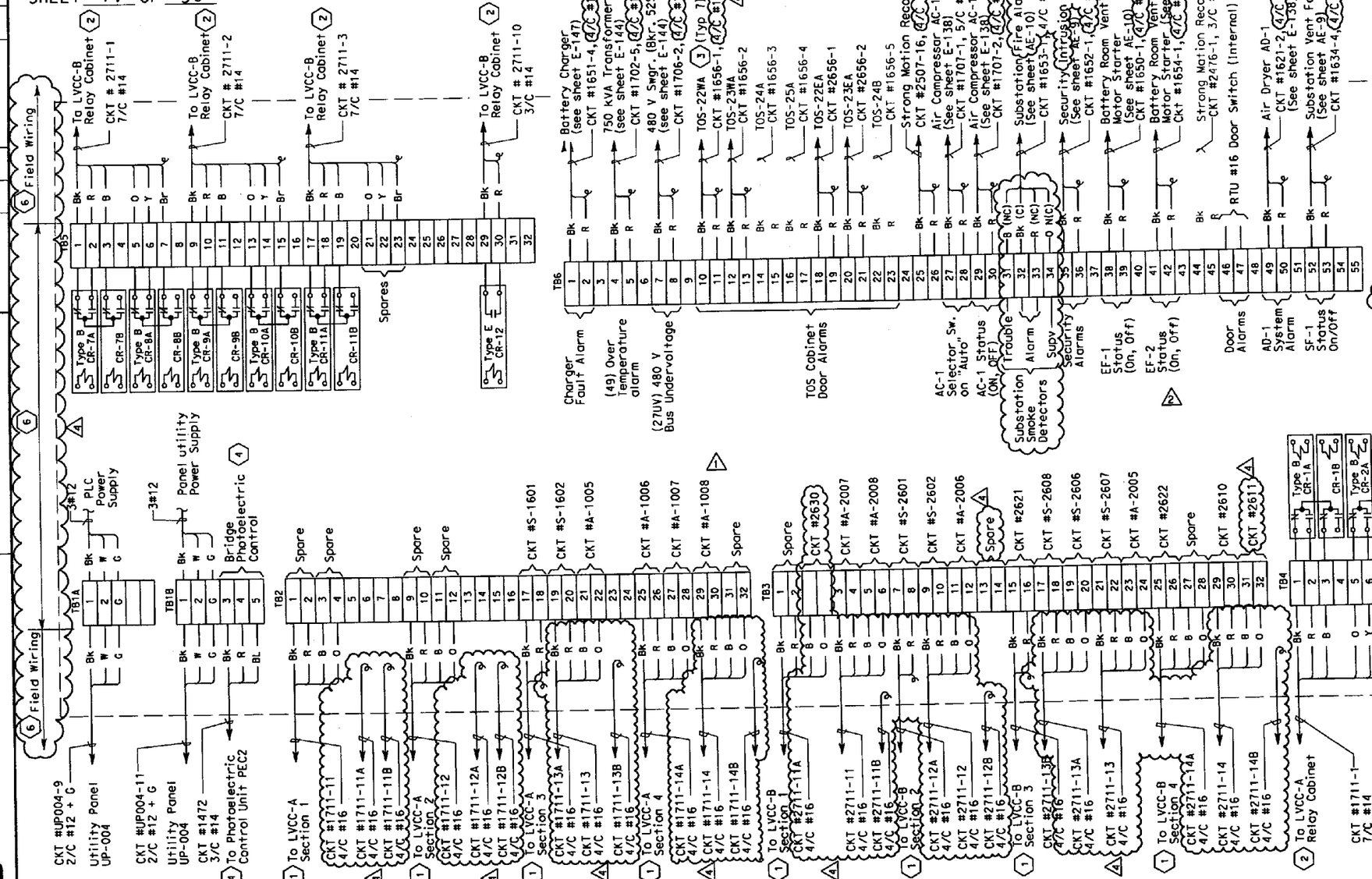

SHEET NOTES:

1. For connection diagram to 480 V LVCC-A and LVCC-B see Sheets E-141 and E-142.
2. For connection diagram to 480 V LVCC-A and LVCC-B, relay cabinet see Sheets E-145 and E-146 respectively.
3. TOS Cabinet door switches input to RTU (4/C #16).
4. For Bridge Lighting Control, see sheet E-15B.
5. (By others).
6. Field to connect the field calbes to corresponding functions inside RTU #16, see vendor Multi-Point Inc. drawings.

NOTES:

1. All spare conductors shall be coiled and taped at conductor ends unless terminated.
2. Terminate cable shields to low level ground bus.
3. References:
   - For UP-004 panel schedule, see Sheet E-148.
   - For relay configuration, see Sheet E-155.
   - For 480 V LVCC elevation and schedules, see sheets E-131 and E-132.
   - For conduit/cable tray schedules, see sheets starting at E-224.

See Sheet E-157

DETAILS
SCADA REMOTE TERMINAL UNIT SYSTEM
RTU #16 ELEMENTARY AND CONNECTION DIAGRAM
NO SCALE

E-156

STATE OF CALIFORNIA - DEPARTMENT OF TRANSPORTATION
Caltrans

DESIGN OVERSIGHT: BEHZAD GOLEMOHAMMADI

CALCULATED/ DESIGNED BY	FK	DATE 2/06	REVISED BY
CHECKED BY	AB	2/06	DATE REVISED

LAST REVISION 00-00-00
DATE PLOTTED => 2/2/2010
TIME PLOTTED => 1:34:20 PM

FOR REDUCED PLANS ORIGINAL SCALE IS IN MILLIMETERS 0 20 40 60 80

DGN FILE =>T:\13103\MS\pse\OTD-Contract 1\CCO\Electrical\CCO-Conductor change & misc\40120lud56r4.dgn
USERNAME =>llorico
CU 04251
EA 0120L1

DIST	COUNTY	ROUTE	KILOMETER POST TOTAL PROJECT	SHEET No	TOTAL SHEETS
04	Ala	80	1.6/2.7	528 R1	643

REGISTERED ELECTRICAL ENGINEER 05/15/06 DATE

1-29-07
PLANS APPROVAL DATE

PB POWER, Inc.
A Parsons Brinckerhoff Company
303 Second St., Suite 700N
San Francisco, CA 94107-1317

REGISTERED PROFESSIONAL ENGINEER JENS ERLINGSSON No. 8249 Exp. 9/30/08 ELECTRICAL STATE OF CALIFORNIA

The State of California or its officers or agents shall not be responsible for the accuracy or completeness of electronic copies of this plan sheet.

To get to the Caltrans web site, go to: http://www.dot.ca.gov

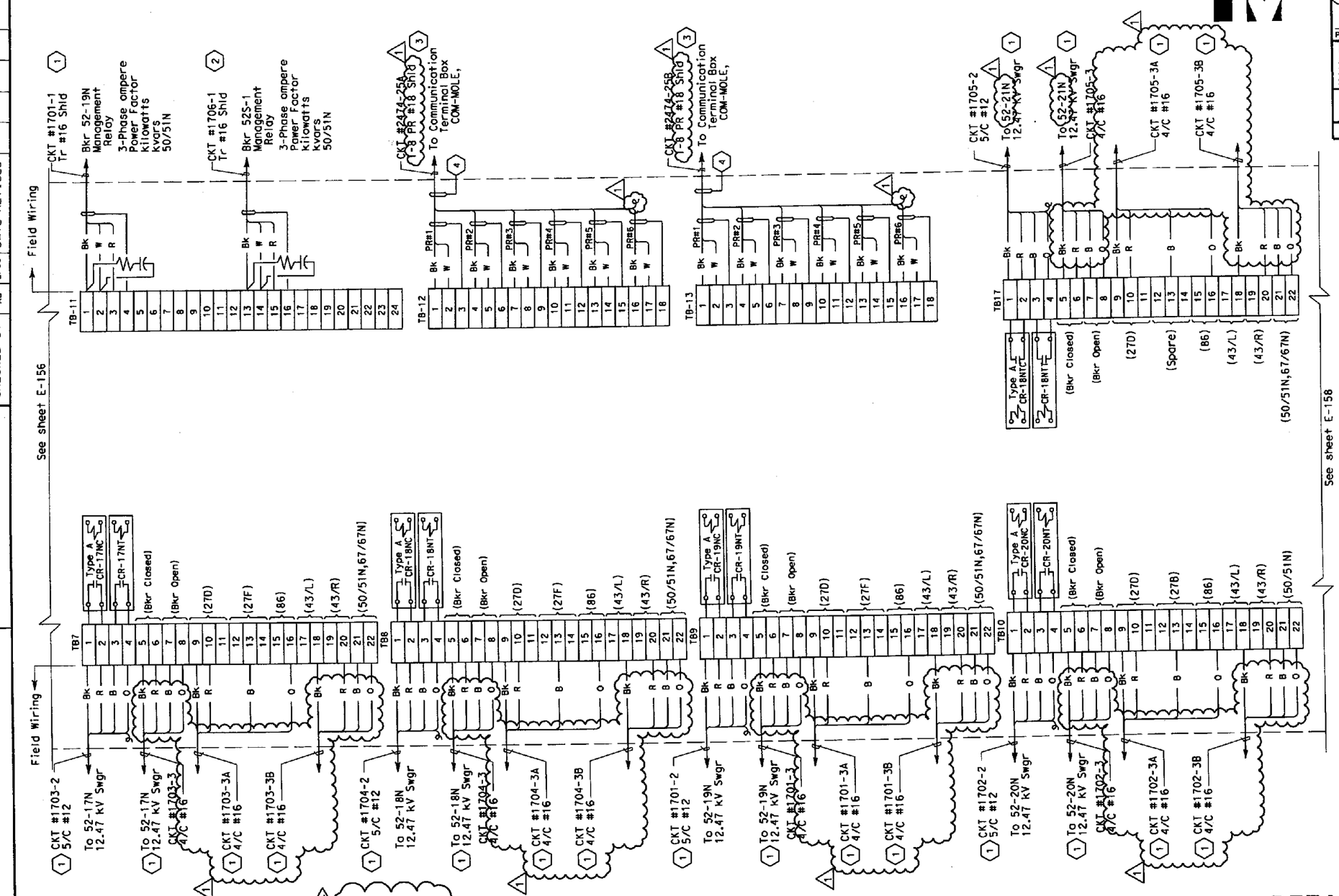

SHEET NOTES:

1. For connection diagram to 12.47 KV switchgear, see sheets E-139 and E-140.
2. For connection diagram to 480 V switchgear, see sheet E-144.
3. For connection diagram to COM-MOLE, see sheet E-161.
4. Field to tape cable overall shield wire.

NOTES:

1. All spare conductors shall be coiled and taped at conductor ends unless terminated.
2. Terminate cable shields to low level ground bus except as noted.
3. References:
   - For relay configuration, see sheet E-155.
   - For RTU #16 panel layout, see sheet E-163.
   - For conduit/cable tray schedules, see sheets starting at E-224.

MARK	DATE	DESCRIPTIONS	REV	CK	CCO No.
1	1/29/10	Changed conductor size to 4/C #16. Added cable/circuits Nos. Revised breaker No.	RSB	EJL	Conductor Change/ Misc

REVISIONS

REGISTERED PROFESSIONAL ENGINEER DAVID H. OTO No. 10699 Exp. 06/30/2011 ELECTRICAL STATE OF CALIFORNIA

CONTRACT CHANGE ORDER NO. 146
SHEET 20 OF 50

DETAILS
SCADA REMOTE TERMINAL UNIT SYSTEM
RTU #16 ELEMENTARY AND CONNECTION DIAGRAM
NO SCALE

E-157

STATE OF CALIFORNIA - DEPARTMENT OF TRANSPORTATION
Caltrans

DESIGN OVERSIGHT: BEHZAD GOLEMOHAMMADI
CALCULATED/DESIGNED BY: FK
CHECKED BY: AB
DATE REVISED: 2/06
REVISED BY: 2/06

LAST REVISION 00-00-00
DATE PLOTTED => 2/2/2010
TIME PLOTTED => 1:34:39 PM

FOR REDUCED PLANS ORIGINAL SCALE IS IN MILLIMETERS 0 20 40 60 80

DGN FILE =>T:\13103\WS\pse\OTD-Contract 1\CCO\Electrical\CCO-Conductor change & misc\40120lud157r1.dgn
USERNAME =>llorico

CU 04251 | EA 0120L1

DIST	COUNTY	ROUTE	KILOMETER POST TOTAL PROJECT	SHEET No	TOTAL SHEETS
04	Ala	80	1.6/2.7	529 R2	643

REGISTERED ELECTRICAL ENGINEER — DATE 05/15/06

1-29-07
PLANS APPROVAL DATE

REGISTERED PROFESSIONAL ENGINEER — JENS ERLINGSSON — No. 8249 — Exp. 9/30/08 — ELECTRICAL — STATE OF CALIFORNIA

PB POWER, Inc.
A Parsons Brinckerhoff Company
303 Second St., Suite 700N
San Francisco, CA 94107-1317

The State of California or its officers or agents shall not be responsible for the accuracy or completeness of electronic copies of this plan sheet.

To get to the Caltrans web site, go to: http://www.dot.ca.gov

Caltrans Metric

ELEMENTARY DIAGRAM - RTU #16

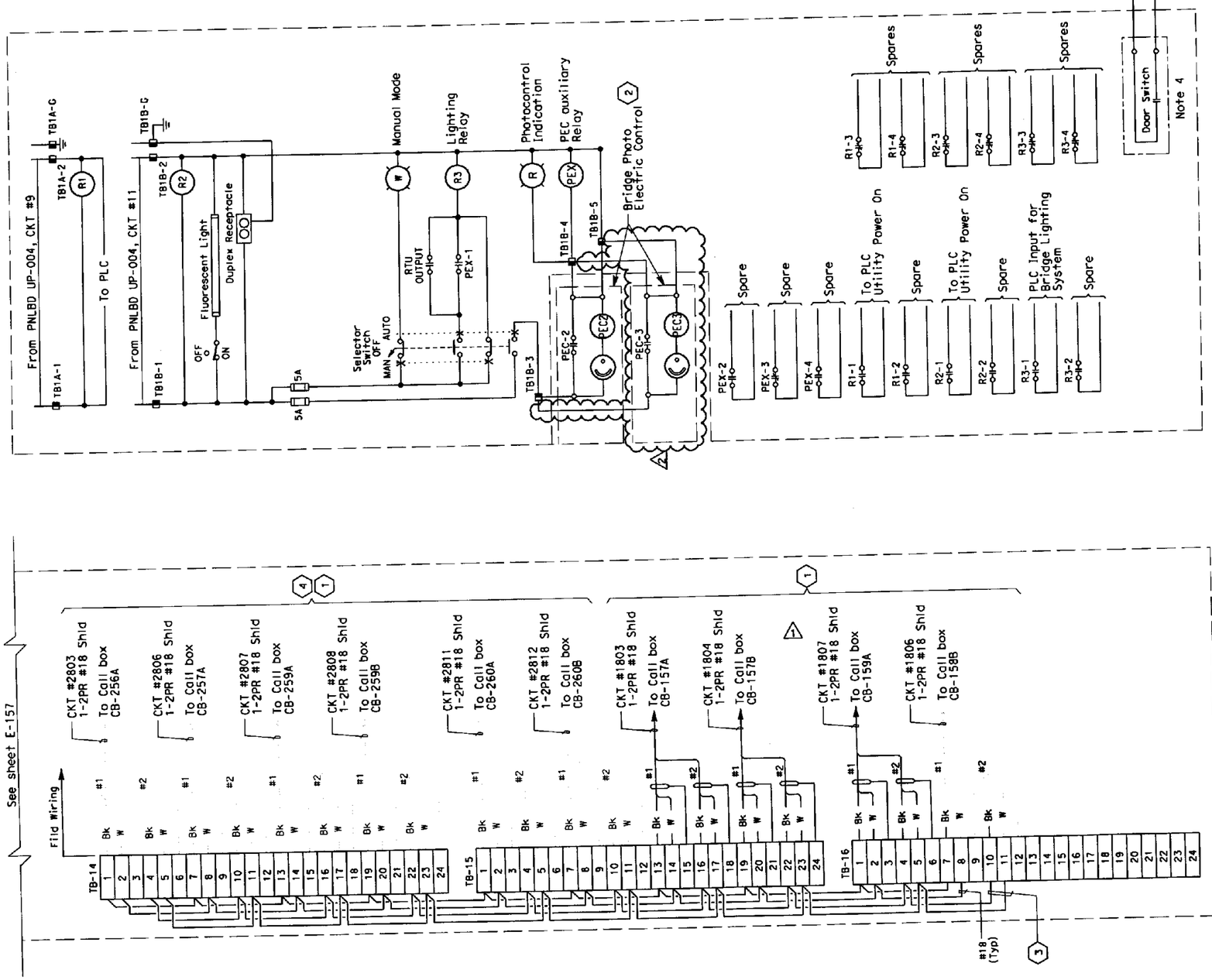

SHEET NOTES:

1. For call box connection diagrams, see sheets E-172.
2. Photocells PEC2 and PEC3 shall be mounted on the roof of the new Mole Substation.
3. The Contractor shall install resistor approximately equal to the impedance (Zo) of the twisted pair #1 at the extreme ends of the multidrop.
4. (By others).

NOTES:

1. All spare conductors shall be coiled and taped at conductor ends unless terminated.
2. Terminate cable shields to low level ground bus.
3. References:
   - For RTU #16 panel layout, see E-163.
   - For relay configuration, see sheet E-155.
   - For conduit/cable tray schedules, see sheets starting at E-224.
   - For SCADA RTU system locations, see sheet E-154.
   - For panel Board UP-004, see sheet E-148.
4. Door switch shall be mounted so that an open RTU cabinet will open contact and alarm.

REGISTERED PROFESSIONAL ENGINEER — DAVID H. OTO — No. 10699 — Exp. 06/30/2011 — ELECTRICAL — STATE OF CALIFORNIA

REGISTERED PROFESSIONAL ENGINEER — FADI WALIEDDINE — No. 11465 — Exp. 12/31/2009 — ELECTRICAL — STATE OF CALIFORNIA

MARK	DATE	DESCRIPTIONS	REV	CK	CCO NO.
2	1/29/10	Added PEC-3 and conductors.	RSB	EJL	Conductor Change/ Misc.
1	8/29/08	Changed Ckt. 1805 to 1807, Call Box CB-158A to CB-159A.	ECR	EJL	1851

REVISIONS

CONTRACT CHANGE ORDER NO. 146
SHEET 21 OF 50

DETAILS
SCADA REMOTE TERMINAL UNIT SYSTEM
RTU #16 ELEMENTARY AND CONNECTION DIAGRAM
NO SCALE

E-158

CALCULATED/ DESIGNED BY	FK
CHECKED BY	AB
DATE 2/06	REVISED BY
2/06	DATE REVISED

DESIGN OVERSIGHT
BEHZAD GOLEMOHAMMADI

STATE OF CALIFORNIA - DEPARTMENT OF TRANSPORTATION
Caltrans

LAST REVISION 00-00-00
DATE PLOTTED => 2/2/2010
TIME PLOTTED => 1:35:17 PM

FOR REDUCED PLANS ORIGINAL SCALE IS IN MILLIMETERS 0 20 40 60 80

DGN FILE =>T:\13103\MS\pse\OTD-Contract 1\CCO\Electrical\CCO-Conductor change & misc\40120lua158r2.dgn
USERNAME =>!lorico

CU 04251 | EA 0120L1

DIST	COUNTY	ROUTE	KILOMETER POST TOTAL PROJECT	SHEET NO	TOTAL SHEETS
04	Ala	80	1.6/2.7	635 R2	643

Caltrans Metric

REGISTERED ELECTRICAL ENGINEER 05/15/06

1-29-07
PLANS APPROVAL DATE

REGISTERED PROFESSIONAL ENGINEER JENS ERLINGSSON No. 8249 Exp. 9/30/08 ELECTRICAL STATE OF CALIFORNIA

PB POWER, Inc.
A Parsons Brinckerhoff Company
303 Second St., Suite 700N
San Francisco, CA 94107-1317

The State of California or its officers or agents shall not be responsible for the accuracy or completeness of electronic copies of this plan sheet.

To get to the Caltrans web site, go to: http://www.dot.ca.gov

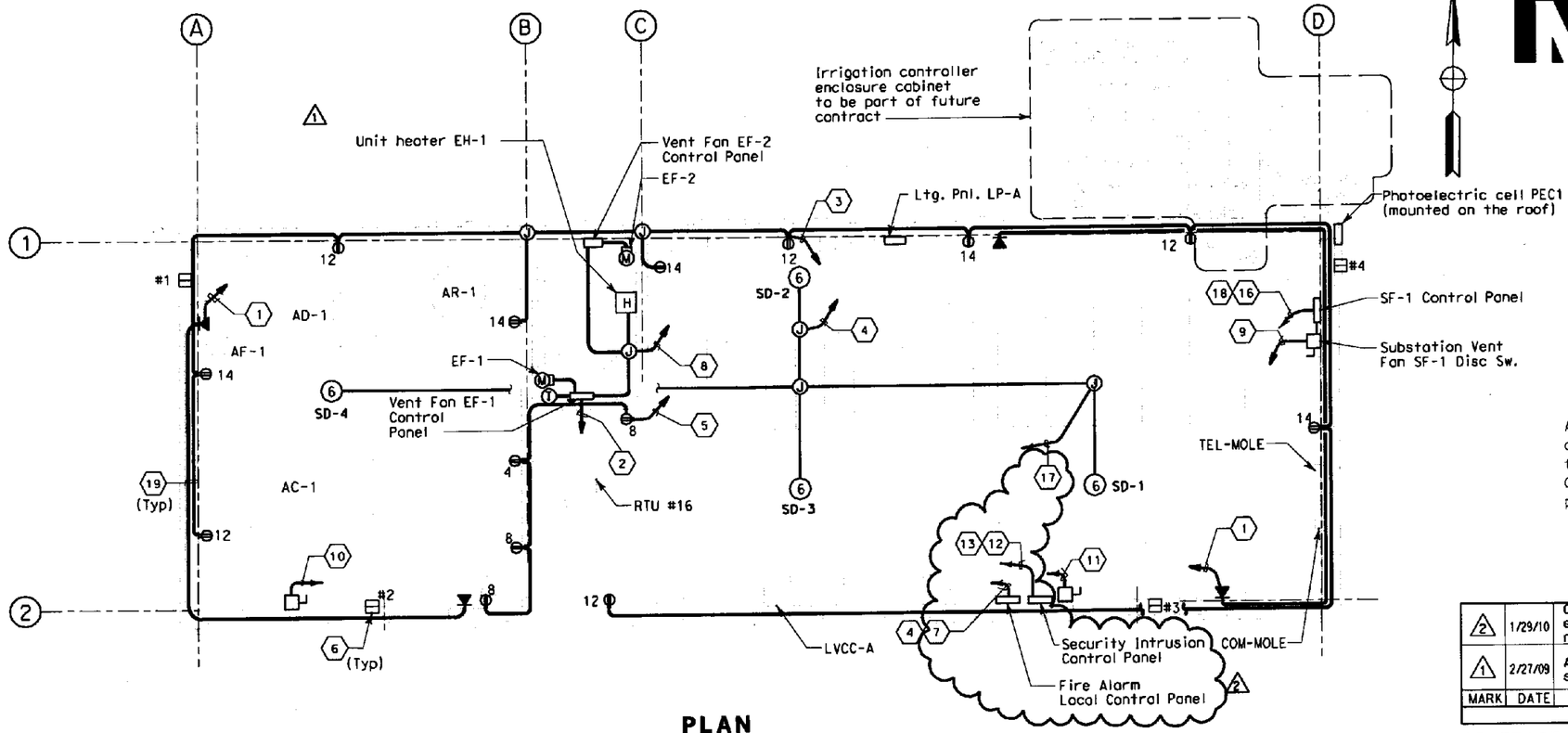

PLAN
SCALE: 1:50

CALIFORNIA STATE FIRE MARSHAL
APPROVED

Approval of this plan does not authorize or approve any omission or deviation from applicable regulations. Final approval is subject to field inspection. One set of approved plans shall be available on the project site at all times.

Reviewed by: 7-25-06

MARK	DATE	DESCRIPTIONS	REV	CK	CCO NO.
2	1/29/10	Changed conductor size to 4/C #16 and equipment description. Revised sheet notes 7 and 13.	RSB	EJL	Conductor Change/ Misc.
1	2/27/09	Added EF-1. Revised EF-2, conduits, sheet notes 2, 7, 8, 11, 18 and Note 2	DO	EJL	Battery Room

REVISIONS

CONTRACT CHANGE ORDER NO. 146
SHEET 22 OF 50

NOTES:

1. For other related work not shown on this sheet, see Mole Substation Electrical Plans.
2. Conduit shall be Electrical Metallic Tubing (EMT) 21 mm minimum, unless otherwise indicated. minimum cable size shall be #12.
3. References:
   - For lighting panel LP-A panel schedule, see sheet AE-7.
   - For LVCC-A single line diagram, see sheet E-130.
   - For Mole substation electrical conduit and cable tray plan, see sheet E-124.
   - For remote terminal unit RTU #16 elementary and connection diagrams, see sheets E-156 thru E-158.
   - For circuit and conduit/cable tray schedule see sheets starting at E-224.
   - For Mechanical Equipment Schedule, see Mechanical drawings.

SHEET NOTES:

(1) Homerun to telephone backboard TEL-MOLE. Contractor shall install 21C with pull wire from the telephone backboard to the telephone outlets.

(2) Homerun to remote terminal unit RTU #16, 27C circuits # 1650-1 (EF-1), and 1654-1 (EF-2), 4/C #16. See sheet AE-10. 2 1

(3) Homerun to lighting panel LP-A, 21C-circuits #12 and #14, 3#12 + #12G.

(4) Homerun to lighting panel LP-A, 21C-circuit #6, 2#12 + #12G.

(5) Homerun to lighting panel LP-A, 21C-circuits #4 and #8, 3#12 + #12G.

(6) All magnetic contact door switches shall be connected to the security control panel per the manufacturer's instructions.

(7) Homerun to remote terminal unit RTU #16, 21C-circuit #1653-1, 4/C #4#16. Homerun to TEL-Mole, 21C-circuit #1653-3, 1-2 pair #17. See sheet AE-10. 2

(8) Homerun to lighting panel LP-A, 27C-circuits #1633, #1650 and #1654. See sheet AE-10. 1

(9) Homerun to LVCC-A 21C-circuit #1634.

SHEET NOTES:

(10) Homerun to LVCC-A from mechanical 21C-circuit #1637. Connections to and from roll up door control panel is not shown. See sheet AE-9. 1

(11) Homerun to LVCC-A, 21C-circuit #1635. See sheet AE-9.

(12) Homerun to lighting panel LP-A, 21C-circuit #18, 2#12 + #12G.

(13) Homerun to remote terminal unit RTU #16, 21C-circuit #1652-1, 4/C #16. Homerun to TEL-MOLE, 21C-circuit #1652-2, 1-2 pair #18. See sheet AE-9. 2

(14) Homerun to lighting panel LP-A, 21C-circuit #28, 2#12 + 12G. Not in Contract.

(15) For details of irrigation controller enclosure cabinet and PB No.5, see Caltrans Standard Plans ES-3H and ES-8, respectively. Not in Contract.

(16) Homerun to remote terminal unit RTU #16, 21C-circuit #1634-4, 4/C #16. See sheet AE-9. 1 4

(17) Homerun to smoke detector local alarm panel, 21C-circuit #1653-2, 2/C #14, See sheet AE-10.

(18) Homerun to TSH, 21C- 2#14. TSH location by Contractor. Circuit #1634-3 for Ventilation Fan SF-1. See Sheet AE-9. 1

(19) Conduits shall be routed exposed, surface mounted 1 on the walls.

1 REGISTERED PROFESSIONAL ENGINEER FADI WALIEDDINE No. 11465 Exp. 12/31/2009 ELECTRICAL STATE OF CALIFORNIA

2 REGISTERED PROFESSIONAL ENGINEER DAVID H. OTO No. 10699 Exp. 06/30/2011 ELECTRICAL STATE OF CALIFORNIA

ALL DIMENSIONS ARE IN MILLIMETERS UNLESS OTHERWISE SHOWN

Behzod Golemohammadi, DESIGN OVERSIGHT	DESIGN: A. Borgia	CHECKED: P. Kwok	PREPARED FOR THE STATE OF CALIFORNIA DEPARTMENT OF TRANSPORTATION
SIGN OFF DATE	DETAILS: L. Reyes	CHECKED: A. Borgia	Jens Erlingsson, PROJECT ENGINEER
DESIGN DETAIL SHEET (METRIC) (REV. 3/1/98)	QUANTITIES: P. McNamee	CHECKED: A. Borgia	CU 04251 EA 0120L1

ORIGINAL SCALE IN MILLIMETERS FOR REDUCED PLANS 0 10 20 30 40 50 60 70 80 90 100

BRIDGE NO. 34-0006
KILOMETER POST

MOLE SUBSTATION ARCHITECTURAL
POWER PLAN

AE-2

DISREGARD PRINTS BEARING EARLIER REVISION DATES

REVISION DATES (PRELIMINARY STAGE ONLY) SHEET OF

FILE => T:\13103\MS\pse\DTD-Contract 1\CCO\Electrical\CCO-Conductor change & misc\401201af002r2.dgn

USERNAME => floriceo DATE PLOTTED => 2/2/2010 TIME PLOTTED => 13:22:32 PM

DIST	COUNTY	ROUTE	KILOMETER POST TOTAL PROJECT	SHEET No	TOTAL SHEETS
04	Ala	80	1.6/2.7	640 R3	643

Caltrans Metric

REGISTERED ELECTRICAL ENGINEER 05/15/06

1-29-07
PLANS APPROVAL DATE

REGISTERED PROFESSIONAL ENGINEER JENS ERLINGSSON No. 8249 Exp. 9/30/08 ELECTRICAL STATE OF CALIFORNIA

PB POWER, Inc.
A Parsons Brinckerhoff Company
303 Second St., Suite 700N
San Francisco, CA 94107-1317

The State of California or its officers or agents shall not be responsible for the accuracy or completeness of electronic copies of this plan sheet.

To get to the Caltrans web site, go to: http://www.dot.ca.gov

LIGHTING PANEL LP-A (CKT #1631) Location: Mole Substation

LOAD DESCRIPTION	LTG	REC	OTH.	BKR		BKR	LTG	REC	OTH.	LOAD DESCRIPTION
Spare				20/1	1 A 2	20/1				Spare
(1) Battery Room Hydrogen Ventilation EF-2 Circuit No. 1654		(1)	22	20/1	3 B 4	20/1		180		Recept-(1) Elect. Equip. and Air Compressor Room
Lighting-Battery Room	78			20/1	5 C 6	20/1			1000	Fire Alarm Local Control Panel (3)
Lighting-Air Compressor Room	583			20/1	7 A 8	20/1		540		Recept.(3) Elect. Equip. and Air Compressor Room
Lighting-Electrical Room	700			20/1	9 B 10	20/1				Spare
Lighting-Electrical Room	700			20/1	11 C 12	20/1		900		Recept-(5) Electrical Equip. Room and Air Compressor Room
Spare				20/1	13 A 14	20/1		900		Recept-(5) Electrical Equip. Room and Air Compressor Room
Spare				20/1	15 B 16	20/1		(1)	53	Battery Room Cooling Ventilation Fan EF-1 Circuit No. 1650.
(1) Outdoor Lighting and Control	1150			20/1	17 C 18	20/1		200		Security Intrusion Alarm Control Panel (3)
Battery Room Unit Heater EH-1 Circuit No. 1633.		(1)	(3) 1666	(3) 30 / 2	19 A 20	20/1				Spare
			1666		21 B 22	20/1	187			Emergency Lighting
Spare				20/1	23 C 24	20/1				Spare
Spare				20/1	25 A 26	20/1				Spare
Spare				20/2	27 B 28	20/1			200	Irrigation Controller Cabinet
					29 C 30	20				Spare
TOTAL VA	3211		3354 (1)				187	2720	1253	TOTAL VA

LOAD SUMARY IN VA

LIGHTING: (at 100%) : 3.398 kVA
GEN USE: (1st 10 kVA at 100% + 50% OF REMAINDER) : 7.327 (1)

TOTAL kVA: 10.725
TOTAL A: 29.80 A at 208 V, 3Ø

BALANCE (kVA)

PHASE A 3.689 (1)
PHASE B 3.008
PHASE C 4.028

(1) VOLTAGE: 208/120 V
PHASE/WIRES: 3-phase, 4-wire
BUS RATING: 100 A
MAINS: 100 A
MOUNTING: SURFACE
k.A.I.C. = 10

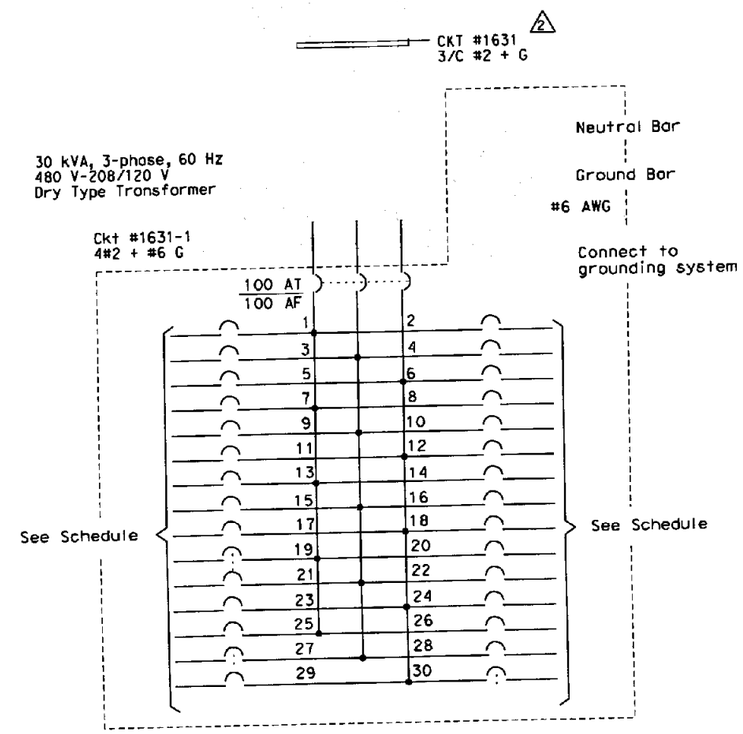

LIGHTING PANEL - LP-A

SHEET NOTE:

(1) Circuits controlled by lighting contactor; revised loads based on actual data; describe heater with internal thermostat.

NOTES:

1. Contractor to provide nameplates and circuit schedule as shown.
2. Reference:
   - For LVCC-A single line diagram, see sheet E-130.
   - For circuit and conduit/cable tray schedules, see sheets starting at E-224.
   - For outdoor lighting control diagram, see sheet AE-9.

CALIFORNIA STATE FIRE MARSHAL
APPROVED

Approval of this plan does not authorize or approve any omission or deviation from applicable regulations. Final approval is subject to field inspection. One set of approved plans shall be available on the project site at all times.

Reviewed by: 7-25-06

REGISTERED PROFESSIONAL ENGINEER DAVID H. OTO No. 10699 Exp. 06/30/2011 ELECTRICAL STATE OF CALIFORNIA

REGISTERED PROFESSIONAL ENGINEER FADI WALIEDDINE No. 11465 Exp. 12/31/2009 ELECTRICAL STATE OF CALIFORNIA

MARK	DATE	DESCRIPTIONS	REV	CK	CCO No.
(3)	1/29/10	Revised breaker size to 30AT. Changed load descriptions.	RSB	EJL	Conductor Change/ Misc.
(2)	1/31/09	Changed cable size.	DO	EJL	Geotech Arrays
(1)	2/27/09	Added EF-2. Revised load.	DO	EJL	Battery Room

REVISIONS

CONTRACT CHANGE ORDER NO. 146
SHEET 23 OF 50

ALL DIMENSIONS ARE IN MILLIMETERS UNLESS OTHERWISE SHOWN

Behzad Golemohammadi
DESIGN OVERSIGHT
SIGN OFF DATE

DESIGN DETAIL SHEET (METRIC) (REV. 3/1/98)

	BY	CHECKED
DESIGN	A. Borgia	F. Kwok
DETAILS	L. Reyes	A. Borgia
QUANTITIES	P. McNamee	A. Borgia

ORIGINAL SCALE IN MILLIMETERS FOR REDUCED PLANS 0 10 20 30 40 50 60 70 80 90 100

PREPARED FOR THE STATE OF CALIFORNIA DEPARTMENT OF TRANSPORTATION

Jens Erlingsson
PROJECT ENGINEER

CU 04251
EA 0120L1

BRIDGE NO. 34-0006
KILOMETER POST

DISREGARD PRINTS BEARING EARLIER REVISION DATES

REVISION DATES (PRELIMINARY STAGE ONLY)

SHEET OF

MOLE SUBSTATION ARCHITECTURAL
PANEL SCHEDULE

AE-7

FILE => T:\13103\MS\pse\OTO-Contract 1\CCO\Electrical\CCO-Conductor change & misc\40120laf007r3.dgn

USERNAME => tlorico DATE PLOTTED => 2/2/2010 TIME PLOTTED => 1:24:19 PM

DIST	COUNTY	ROUTE	KILOMETER POST TOTAL PROJECT	SHEET No	TOTAL SHEETS
04	Ala	80	1.6/2.7	642 R1	643

REGISTERED STRUCTURAL ENGINEER 05/15/06

1-29-07
PLANS APPROVAL DATE

REGISTERED PROFESSIONAL ENGINEER JENS ERLINGSSON No. 8249 Exp. 9/30/08 ELECTRICAL STATE OF CALIFORNIA

PB POWER, Inc.
A Parsons Brinckerhoff Company
303 Second St., Suite 700N
San Francisco, CA 94107-1317

The State of California or its officers or agents shall not be responsible for the accuracy or completeness of electronic copies of this plan sheet.

To get to the Caltrans web site, go to: http://www.dot.ca.gov

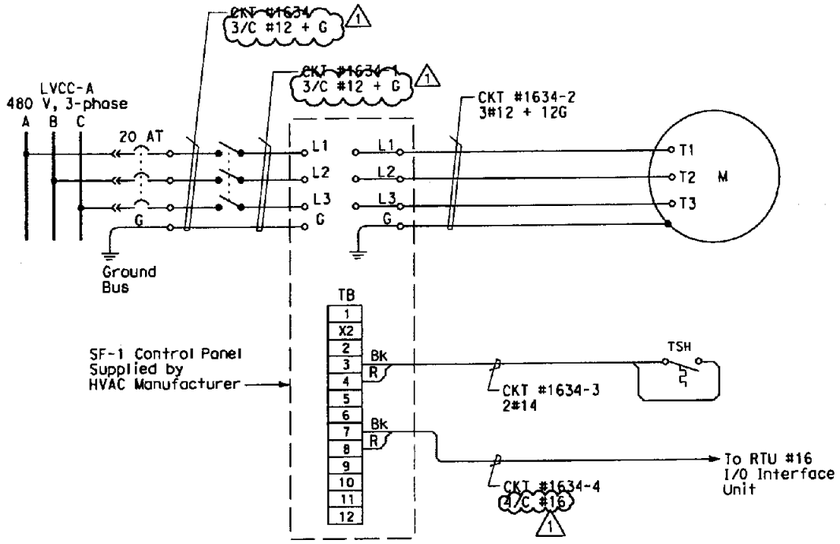

SUBSTATION VENTILATION FAN SF-1

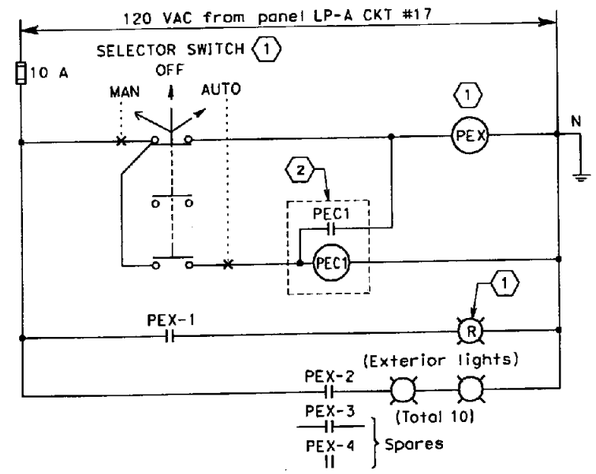

OUTDOOR LIGHTING CONTROL

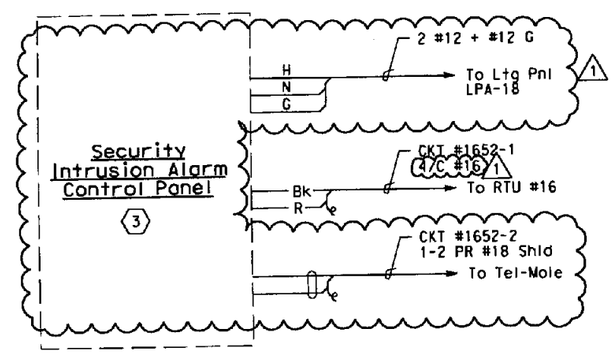

SUBSTATION DOOR ALARM

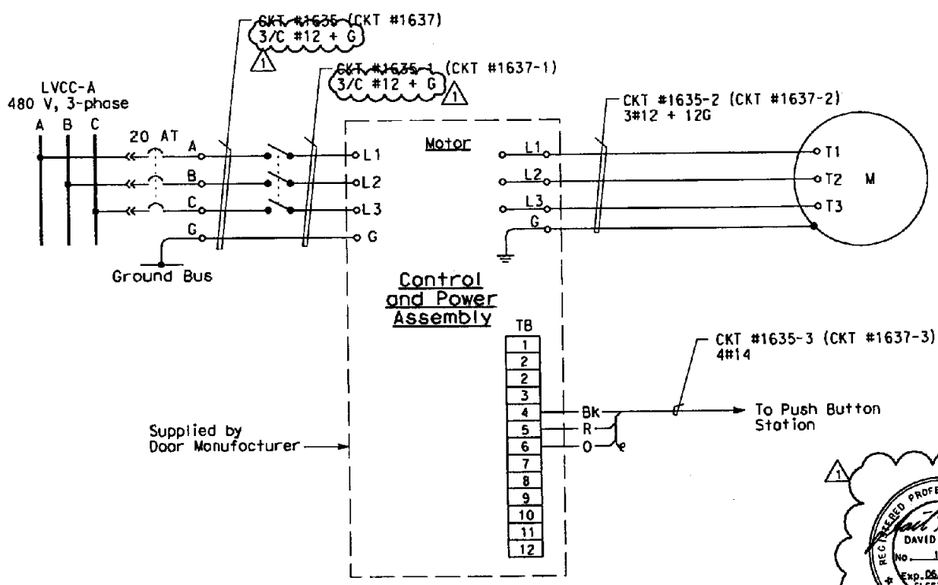

ELECTRICAL ROOM ROLL-UP DOOR

(TYPICAL FOR MECHANICAL ROOM ROLL-UP DOOR
CIRCUITS SHOWN IN PARENTHESIS)

REGISTERED PROFESSIONAL ENGINEER DAVID H. OTO No. 10699 Exp. 06/30/2011 ELECTRICAL STATE OF CALIFORNIA

SHEET NOTES:

1. NEMA 1 Lighting Control Enclosure with 120 VAC coil and 4 normally open contacts. Selector switch and red running light are located on the face of enclosure.
2. 120 VAC Photo Cell Unit mounted on the roof.
3. For components and wiring, see Integration Inc. drawing sheets INT-1, INT-2 and INT-3.

NOTE:

1. References:
   - For RTU terminations, see sheet E-156.
   - For mechanical equipment list and specifications, see AM drawings.
   - For LVCC-A single line diagram, see sheet E-130.
   - For lighting panel LP-A panel schedule, see sheet AE-7.
   - For lighting control conduit detail, see sheet AE-3.

CALIFORNIA STATE FIRE MARSHAL
APPROVED

Approval of this plan does not authorize or approve any omission or deviation from applicable regulations. Final approval is subject to field inspection. One set of approved plans shall be available on the project site at all times.

Reviewed by: 7-25-06

MARK	DATE	DESCRIPTIONS	REV	CK	CCO No.
1	1/29/10	Changed conductor size to 4/C #16. Revised Substation door alarm wiring diagram. Added sheet notes 3.	RSB	EJL	Conductor Change/ Misc

REVISIONS

CONTRACT CHANGE ORDER NO. 146
SHEET 24 OF 50

ALL DIMENSIONS ARE IN MILLIMETERS UNLESS OTHERWISE SHOWN

Behzad Golemohammadi
DESIGN OVERSIGHT
SIGN OFF DATE

DESIGN	BY A. Borgio	CHECKED F. Kwok
DETAILS	BY L. Reyes	CHECKED A. Borgio
QUANTITIES	BY P. McNamee	CHECKED A. Borgio

PREPARED FOR THE STATE OF CALIFORNIA DEPARTMENT OF TRANSPORTATION

Jens Erlingsson
PROJECT ENGINEER

BRIDGE NO. 34-0006
KILOMETER POST

MOLE SUBSTATION ARCHITECTURAL
ELEMENTARY DIAGRAMS

AE-9

SHEET OF

CU 04251
EA 0120L1

DISREGARD PRINTS BEARING EARLIER REVISION DATES

REVISION DATES (PRELIMINARY STAGE ONLY)

DESIGN DETAIL SHEET (METRIC) (REV. 3/1/98)

ORIGINAL SCALE IN MILLIMETERS FOR REDUCED PLANS 0 10 20 30 40 50 60 70 80 90 100

FILE => T:\13103\MS\pse\OTD-Contract 1\CCO\Electrical\CCO-Conductor change & misc\40120laf009r1.dgn

USERNAME => llorico DATE PLOTTED => 2/2/2010 TIME PLOTTED => 1:24:53 PM

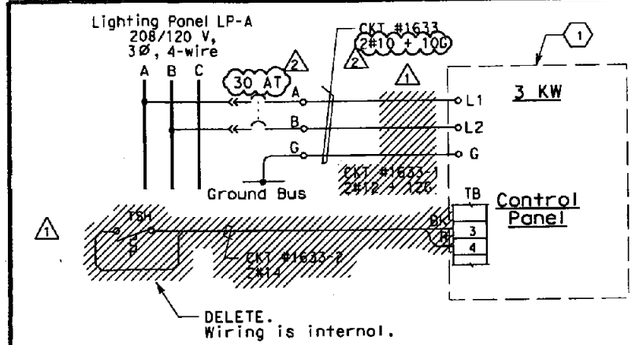

BATTERY ROOM UNIT HEATER EH-1

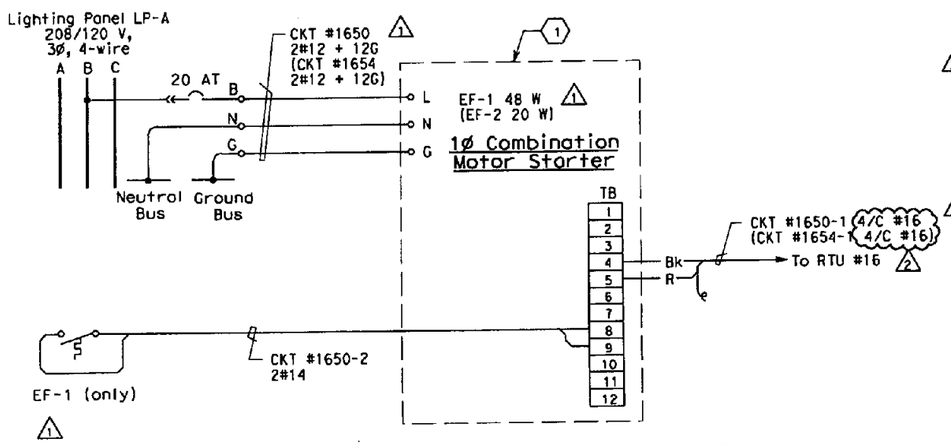

BATTERY ROOM COOLING VENTILATION FAN EF-1
(BATTERY ROOM HYDROGEN VENTILATION FAN EF-2)

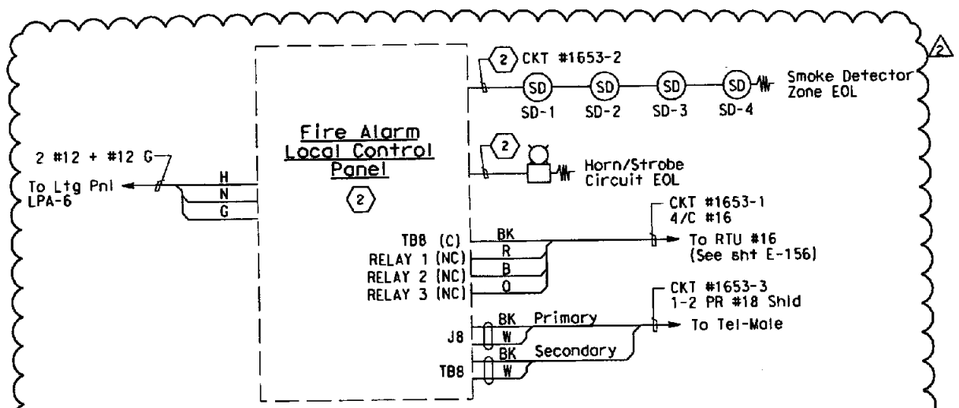

MOLE SUBSTATION
FIRE ALARM LOCAL CONTROL PANEL

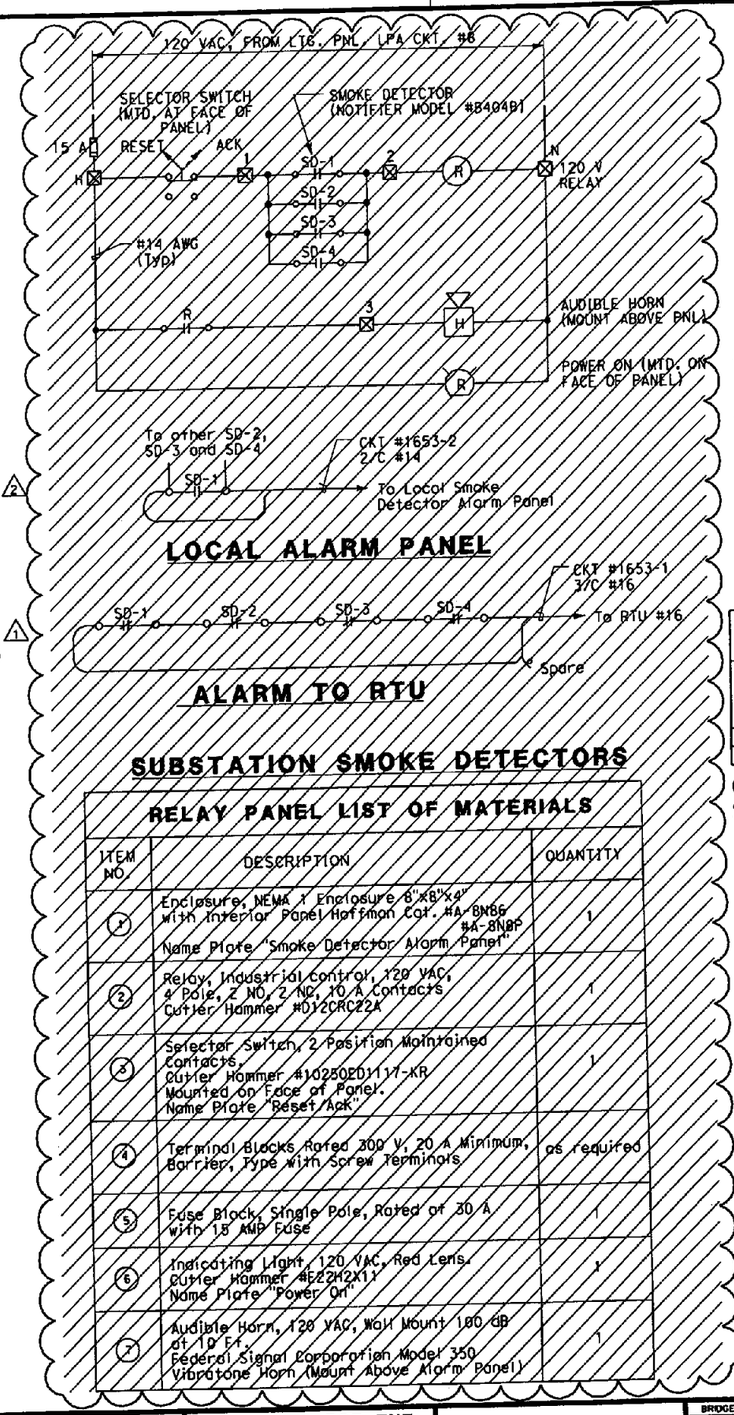

RELAY PANEL LIST OF MATERIALS

ITEM NO.	DESCRIPTION	QUANTITY
1	Enclosure, NEMA 1 Enclosure 8"x8"x4" with Interior Panel Hoffman Cat. #A-8N86 #A-8N8P Name Plate "Smoke Detector Alarm Panel"	1
2	Relay, Industrial Control, 120 VAC, 4 Pole, 2 NO, 2 NC, 10 A Contacts Cutler Hammer #D12CRC22A	1
3	Selector Switch, 2 Position Maintained Contacts. Cutler Hammer #10250TD1117-KR Mounted on Face of Panel. Name Plate "Reset Ack"	1
4	Terminal Blocks Rated 300 V, 20 A Minimum, Barrier, Type with Screw Terminals	as required
5	Fuse Block, Single Pole, Rated at 30 A with 15 AMP Fuse	1
6	Indicating Light, 120 VAC, Red Lens. Cutler Hammer #E22H2X11 Name Plate "Power On"	1
7	Audible Horn, 120 VAC, Wall Mount 100 dB at 10 Ft. Federal Signal Corporation Model 350 Vibratone Horn (Mount Above Alarm Panel)	1

Caltrans Metric

DIST	COUNTY	ROUTE	KILOMETER POST TOTAL PROJECT	SHEET NO	TOTAL SHEETS
04	Ala	80	1.6/2.7	643 R2	643

REGISTERED ELECTRICAL ENGINEER 05/15/06

1-29-07
PLANS APPROVAL DATE

REGISTERED PROFESSIONAL ENGINEER JENS ERLINGSSON No. 8249 Exp. 9/30/08 ELECTRICAL STATE OF CALIFORNIA

PB POWER, Inc.
A Parsons Brinckerhoff Company
303 Second St., Suite 700N
San Francisco, CA 94107-1317

The State of California or its officers or agents shall not be responsible for the accuracy or completeness of electronic copies of this plan sheet.

To get to the Caltrans web site, go to: http://www.dot.ca.gov

SHEET NOTES:

(1) Supplied by HVAC manufacturer. Fan Control Center shall use ON/OFF switch and have auxilliary contacts to report motor-ON voltage to RTU.

(2) For complete wiring and components, see Tri-Signal Integration Inc. drawing sheets FA-1 and FA-2.

NOTE:

1. References:
   - For RTU terminations, see sheet E-156.
   - For mechanical equipment list and specifications, see AM drawings.
   - For lighting panel LP-A panel schedule, see sheet AE-7.

MARK	DATE	DESCRIPTIONS	REV	CK	CCO NO.
2	1/29/10	Changed breaker size and conductor size. Revised local substation smoke detector system.	RSB	EJL	Conductor Change/ Misc.
1	2/27/09	Added EF-2 ckts. #1650-2, 1654 and 1654-1. Revised EF-1. Deleted TSH and disconnect switch, ckts. #1633-1 and 1633-2.	ECR	EJL	Battery Room

REVISIONS

CONTRACT CHANGE ORDER NO. 146
SHEET 25 OF 50

REGISTERED PROFESSIONAL ENGINEER FADI WALIEDDINE No. 11465 Exp. 12/31/2009 ELECTRICAL STATE OF CALIFORNIA

REGISTERED PROFESSIONAL ENGINEER DAVID H. OTO No. 10699 Exp. 06/30/2011 ELECTRICAL STATE OF CALIFORNIA

CALIFORNIA STATE FIRE MARSHAL
APPROVED

Approval of this plan does not authorize or approve any omission or deviation from applicable regulations. Final approval is subject to field inspection. One set of approved plans shall be available on the project site at all times.

Reviewed by: 7-25-06

ALL DIMENSIONS ARE IN MILLIMETERS UNLESS OTHERWISE SHOWN

Behzod Golemohammadi
DESIGN OVERSIGHT
SIGN OFF DATE

	BY	CHECKED
DESIGN	A. Borgio	F. Kwok
DETAILS	L. Reyes	A. Borgio
QUANTITIES	P. McNamee	A. Borgio

PREPARED FOR THE STATE OF CALIFORNIA DEPARTMENT OF TRANSPORTATION

Jens Erlingsson
PROJECT ENGINEER

BRIDGE NO. 34-0006
KILOMETER POST

MOLE SUBSTATION ARCHITECTURAL
ELEMENTARY DIAGRAMS
AE-10

SHEET OF

DISREGARD PRINTS BEARING EARLIER REVISION DATES

REVISION DATES (PRELIMINARY STAGE ONLY)

CU 04251
EA 0120L1

DESIGN DETAIL SHEET (METRIC) (REV. 3/1/98)

ORIGINAL SCALE IN MILLIMETERS FOR REDUCED PLANS 0 10 20 30 40 50 60 70 80 90 100

FILE => T:\13103\M5\pse\OTO-Contract 1\CCO\Electrical\CCO-Conductor change & misc\40120laf010r2.dgn

USERNAME => tiorico DATE PLOTTED => 2/2/2010 TIME PLOTTED => 1:25:26 PM

DRAWING TITLE	DRAWING NO.
ELECTRICAL SHEET INDEX NO. 1	E-1
ELECTRICAL SHEET INDEX NO. 2	E-2
ELECTRICAL SHEET INDEX NO. 3	E-3
ELECTRICAL KEY MAP	E-4
ELECTRICAL SYMBOLS	E-5
ELECTRICAL SYMBOLS AND ABBREVIATIONS	E-6
ELECTRICAL NOTES AND ABBREVIATIONS	E-7, E-8
HIGH MAST LIGHTING SYMBOLS AND NOTES	E-9
ROADWAY AND GIRDER LEVEL WESTBOUND (LIGHTING AND ELECTRICAL SYSTEMS)	E-10 TO E-15
DETAILS ROADWAY AND GIRDER LEVEL WESTBOUND DEMONSTRATION LIGHTING POLE	E-15A
DETAILS ROADWAY AND GIRDER LEVEL WESTBOUND DEMONSTRATION LIGHTING POLE	E-15B
DETAILS ROADWAY AND GIRDER LEVEL WESTBOUND TYPICAL FUTURE ROADWAY LIGHTING POLE ANCHORAGE	E-16
DETAILS ROADWAY AND GIRDER LEVEL WESTBOUND TYPICAL LIGHT PIPE INSTALLATION 1	E-17
DETAILS ROADWAY AND GIRDER LEVEL WESTBOUND TYPICAL LIGHT PIPE INSTALLATION 2	E-18
DETAILS ROADWAY AND GIRDER LEVEL WESTBOUND TYPICAL LIGHT PIPE INSTALLATION 3	E-19
DETAILS ROADWAY AND GIRDER LEVEL WESTBOUND SERVICE PLATFORM #22W	E-20
DETAILS ROADWAY AND GIRDER LEVEL WESTBOUND SERVICE PLATFORM #23W	E-21
DETAILS ROADWAY AND GIRDER LEVEL WESTBOUND SERVICE PLATFORM SECTIONS	E-22
DETAILS ROADWAY AND GIRDER LEVEL WESTBOUND HINGE EW INTERFACE SKYWAY AND OAKLAND APPROACH STRUCTURES	E-23
DETAILS ROADWAY AND GIRDER LEVEL WESTBOUND GIRDER CONDUIT INSTALLATION	E-24 TO E-28
DETAILS ROADWAY AND GIRDER LEVEL WESTBOUND LIGHT PIPE CONDUIT LOCATION	E-28A TO E-28C
DETAILS ROADWAY AND GIRDER LEVEL WESTBOUND HINGE FW CONDUIT INSTALLATION	E-29
DETAILS ROADWAY AND GIRDER LEVEL WESTBOUND PIER CONDUIT INSTALLATION	E-30 TO E-31
DETAILS ROADWAY AND GIRDER LEVEL WESTBOUND EMBEDDED CONCRETE INSERT CHANNEL	E-32 TO E-34
DETAILS ROADWAY AND GIRDER LEVEL WESTBOUND GIRDER CONDUIT SUPPORTS	E-35
DETAILS ROADWAY AND GIRDER LEVEL WESTBOUND TYPICAL CONDUIT INSTALLATION AND SECTIONS	E-36
DETAILS ROADWAY AND GIRDER LEVEL WESTBOUND CONDUIT INSTALLATION AND SECTIONS	E-36A, E-36B, E-36C

DRAWING TITLE	DRAWING NO.
DETAILS ROADWAY AND GIRDER LEVEL WESTBOUND TYPICAL BARRIER PULL BOX AND CONDUIT LOCATIONS	E-37
DETAILS ROADWAY AND GIRDER LEVEL WESTBOUND LIGHTING POLE AND CONDUIT LOCATIONS	E-38
DETAILS ROADWAY AND GIRDER LEVEL WESTBOUND CALL BOX CONDUIT LOCATIONS	E-39
DETAILS ROADWAY AND GIRDER LEVEL WESTBOUND GIRDER SECTIONS	E-40 TO E-41
DETAILS ROADWAY AND GIRDER LEVEL WESTBOUND GIRDER GROUNDING SYSTEM	E-42
DETAILS ROADWAY AND GIRDER LEVEL WESTBOUND TYPICAL GROUNDING INSTALLATION	E-43
DETAILS ROADWAY AND GIRDER LEVEL WESTBOUND TYPICAL PULL BOX SCHEDULES	E-44
DETAILS ROADWAY AND GIRDER LEVEL WESTBOUND UP-171 PANEL SCHEDULE	E-45
DETAILS ROADWAY AND GIRDER LEVEL WESTBOUND UP-172 PANEL SCHEDULE	E-46
DETAILS ROADWAY AND GIRDER LEVEL WESTBOUND 480 V ROADWAY LIGHTING WIRING DIAGRAM	E-47
DETAILS ROADWAY AND GIRDER LEVEL WESTBOUND 480 V ROADWAY LIGHTING WIRING DIAGRAM	E-48
DETAILS ROADWAY AND GIRDER LEVEL WESTBOUND 480 V LIGHT PIPE WIRING DIAGRAM	E-48A, E-48B
ROADWAY AND GIRDER LEVEL EASTBOUND (LIGHTING AND ELECTRICAL SYSTEMS)	E-49 TO E-52
DETAILS ROADWAY AND GIRDER LEVEL EASTBOUND SERVICE PLATFORM #22E	E-53
DETAILS ROADWAY AND GIRDER LEVEL EASTBOUND TYPICAL SERVICE PLATFORM SECTIONS	E-54
DETAILS ROADWAY AND GIRDER LEVEL EASTBOUND TYPICAL BIKE PATH PLAN AND ELEVATION	E-55
DETAILS ROADWAY AND GIRDER LEVEL EASTBOUND TYPICAL BIKE PATH LIGHTING DETAILS	E-56
DETAILS ROADWAY AND GIRDER LEVEL EASTBOUND TYPICAL BIKE PATH LIGHT INSTALLATION	E-57
DETAILS ROADWAY AND GIRDER LEVEL EASTBOUND TYPICAL CALL BOX PLAN AND SECTIONS	E-58
DETAILS ROADWAY AND GIRDER LEVEL EASTBOUND HINGE EE INTERFACE SKYWAY AND OAKLAND APPROACH STRUCTURES	E-59
DETAILS ROADWAY AND GIRDER LEVEL EASTBOUND GIRDER CONDUIT INSTALLATION	E-60 TO E-62
DETAILS ROADWAY AND GIRDER LEVEL EASTBOUND LIGHT PIPE CONDUIT LOCATION	E-62A, E-62B
DETAILS ROADWAY AND GIRDER LEVEL EASTBOUND HINGE FE CONDUIT INSTALLATION	E-63

DRAWING TITLE	DRAWING NO.
DETAILS ROADWAY AND GIRDER LEVEL EASTBOUND GIRDER CONDUIT INSTALLATION	E-64
DETAILS ROADWAY AND GIRDER LEVEL EASTBOUND EMBEDDED CONCRETE INSERT CHANNEL	E-65 TO E-66
DETAILS ROADWAY AND GIRDER LEVEL EASTBOUND GIRDER CONDUIT SUPPORTS	E-67
DETAILS ROADWAY AND GIRDER LEVEL EASTBOUND TYPICAL CONDUIT INSTALLATION AND SECTIONS	E-68
DETAILS ROADWAY AND GIRDER LEVEL EASTBOUND GIRDER SECTIONS	E-69 TO E-70
DETAILS ROADWAY AND GIRDER LEVEL EASTBOUND TYPICAL BARRIER PULL BOX AND CONDUIT LOCATIONS	E-71
DETAILS ROADWAY AND GIRDER LEVEL EASTBOUND LIGHTING POLE CONDUIT LOCATIONS	E-72
DETAILS ROADWAY AND GIRDER LEVEL EASTBOUND CALL BOX CONDUIT LOCATIONS	E-73
DETAILS ROADWAY AND GIRDER LEVEL EASTBOUND GIRDER GROUNDING SYSTEM	E-74
DETAILS ROADWAY AND GIRDER LEVEL EASTBOUND TYPICAL GROUNDING INSTALLATION	E-75
DETAILS ROADWAY AND GIRDER LEVEL EASTBOUND LIGHT POLE LOCATION AND BIKE PATH FIXTURE SCHEDULE	E-76
DETAILS ROADWAY AND GIRDER LEVEL EASTBOUND TYPICAL PULL BOX SCHEDULES	E-77
DETAILS ROADWAY AND GIRDER LEVEL EASTBOUND UP-271 PANEL SCHEDULE	E-78
DETAILS ROADWAY AND GIRDER LEVEL EASTBOUND LP-281 PANEL SCHEDULE	E-79

Caltrans Metric

DIST	COUNTY	ROUTE	KILOMETER POST TOTAL PROJECT	SHEET No	TOTAL SHEETS
04	Ala	80	1.6/2.7	370 R1	643

REGISTERED ELECTRICAL ENGINEER 05/15/06 DATE

1-29-07
PLANS APPROVAL DATE

REGISTERED PROFESSIONAL ENGINEER JENS ERLINGSSON No. 8249 Exp. 9/30/08 ELECTRICAL STATE OF CALIFORNIA

PB POWER, Inc.
A Parsons Brinckerhoff Company
303 Second St., Suite 700N
San Francisco, CA 94107-1317

The State of California or its officers or agents shall not be responsible for the accuracy or completeness of electronic copies of this plan sheet.

To get to the Caltrans web site, go to: http://www.dot.ca.gov

CONTRACT CHANGE ORDER 146

SHEET 26 OF 50

ELECTRICAL SHEET INDEX NO.1

NO SCALE

E-1

REVISED BY	DATE	DATE REVISED

CALCULATED/DESIGNED BY: AB — DATE 2/06
CHECKED BY: FK — 2/06

DESIGN OVERSIGHT
BEHZAD GOLEMOHAMMADI

STATE OF CALIFORNIA - DEPARTMENT OF TRANSPORTATION
Caltrans

LAST REVISION 00-00-00
DATE PLOTTED => 2/24/2010
TIME PLOTTED => 9:13:40 AM

FOR REDUCED PLANS ORIGINAL SCALE IS IN MILLIMETERS 0 20 40 60 80

DGN FILE =>T:\13103\MS\pse\OTD-Contract 1\CCO\Electrical\00 Drawing Index\40120lua001r1.dgn
USERNAME =>llorico

CU 04251

EA 0120L1

DRAWING TITLE	DRAWING NO.
UNDERGROUND AND ROADWAY AT-GRADE (LIGHTING AND ELECTRICAL SYSTEMS)	E-80 to E-97
DETAILS UNDERGROUND AND ROADWAY AT-GRADE PIER E22R PLAN AND SECTIONS	E-98
DETAILS UNDERGROUND AND ROADWAY AT-GRADE PIER E22L PLAN AND SECTIONS	E-99
DETAILS UNDERGROUND AND ROADWAY AT-GRADE CALL BOX INSTALLATION	E-100
DETAILS UNDERGROUND AND ROADWAY AT-GRADE MOLE SUBSTATION CONDUIT	E-101
DETAILS UNDERGROUND AND ROADWAY AT-GRADE DUCT BANK SECTIONS	E-102 TO E-103
DETAILS UNDERGROUND AND ROADWAY AT-GRADE ELEVATIONS	E-104 TO E-105
DETAILS UNDERGROUND AND ROADWAY AT-GRADE TYPICAL MANHOLE PLAN AND DUCT BANK SECTIONS	E-106
DETAILS UNDERGROUND AND ROADWAY AT-GRADE TYPICAL DUCT BANK SECTIONS	E-107 TO E-109
DETAILS UNDERGROUND AND ROADWAY AT-GRADE TYPICAL DUCT BANK SECTIONS	E-110
DETAILS UNDERGROUND AND ROADWAY AT-GRADE MANHOLE PLANS AND SECTIONS	E-111 TO E-118
DETAILS UNDERGROUND AND ROADWAY AT-GRADE TYPICAL MANHOLE AND DUCT BANK	E-119
DETAILS UNDERGROUND AND ROADWAY AT-GRADE GROUNDING INTERFACE	E-120
DETAILS UNDERGROUND AND ROADWAY AT-GRADE 15 kV CABLE SHIELD GROUNDING	E-120A
DETAILS UNDERGROUND AND ROADWAY AT-GRADE PULL BOX SCHEDULE	E-121
DETAILS UNDERGROUND AND ROADWAY AT-GRADE UP-173 PANEL SCHEDULE	E-122
MOLE SUBSTATION ELECTRICAL (EQUIPMENT ARRANGEMENT)	E-123
MOLE SUBSTATION ELECTRICAL (CONDUIT AND CABLE TRAY)	E-124
DETAILS MOLE SUBSTATION ELECTRICAL 12.47 kV SINGLE LINE DIAGRAM	E-125

DRAWING TITLE	DRAWING NO.
DETAILS MOLE SUBSTATION ELECTRICAL 12.47 kV TO 480 V SINGLE LINE DIAGRAM	E-126
DETAILS MOLE SUBSTATION ELECTRICAL 12.47 kV CIRCUIT BREAKER ELEMENTARY DIAGRAM	E-127
DETAILS MOLE SUBSTATION ELECTRICAL 480 V SWITCHGEAR CIRCUIT BREAKER ELEMENTARY DIAGRAM	E-128
DETAILS MOLE SUBSTATION ELECTRICAL 12.47 kV TO 480 V UNIT SUBSTATION ELEVATION AND SCHEDULE	E-129
DETAILS MOLE SUBSTATION ELECTRICAL 480 V LVCC-A SINGLE LINE DIAGRAM	E-130
DETAILS MOLE SUBSTATION ELECTRICAL 480 V LVCC-A ELEVATION AND SCHEDULE	E-131
DETAILS MOLE SUBSTATION ELECTRICAL 480 V LVCC-B SINGLE LINE DIAGRAM	E-132
DETAILS MOLE SUBSTATION ELECTRICAL 480 V LVCC-B ELEVATION AND SCHEDULE	E-133
DETAILS MOLE SUBSTATION ELECTRICAL LVCC-A RELAY CABINET ELEMENTARY DIAGRAM	E-134
DETAILS MOLE SUBSTATION ELECTRICAL LVCC-B RELAY CABINET ELEMENTARY DIAGRAM	E-135
DETAILS MOLE SUBSTATION ELECTRICAL 480 V TYPICAL LVCC ELEMENTARY DIAGRAMS	E-136
DETAILS MOLE SUBSTATION ELECTRICAL 480 V MISCELLANEOUS ELEMENTARY DIAGRAMS	E-137 TO E-138
DETAILS MOLE SUBSTATION ELECTRICAL 12.47 kV SWITCHGEAR CONNECTION DIAGRAM	E-139
DETAILS MOLE SUBSTATION ELECTRICAL 12.47 kV SWITCHGEAR CONNECTION DIAGRAM	E-140
DETAILS MOLE SUBSTATION ELECTRICAL LVCC-A CONNECTION DIAGRAM	E-141
DETAILS MOLE SUBSTATION ELECTRICAL LVCC-B CONNECTION DIAGRAM	E-142
DETAILS MOLE SUBSTATION ELECTRICAL 480 V SWITCHGEAR CONNECTION DIAGRAM	E-143
DETAILS MOLE SUBSTATION ELECTRICAL TRANSFORMER AND 480 V SWITCHGEAR CONNECTION DIAGRAM	E-144
DETAILS MOLE SUBSTATION ELECTRICAL LVCC-A RELAY CABINET ARRANGEMENT AND CONNECTION DIAGRAM	E-145
DETAILS MOLE SUBSTATION ELECTRICAL LVCC-B RELAY CABINET ARRANGEMENT AND CONNECTION DIAGRAM	E-146
DETAILS MOLE SUBSTATION ELECTRICAL PANEL DP-A SCHEDULE	E-147

DRAWING TITLE	DRAWING NO.
DETAILS MOLE SUBSTATION ELECTRICAL PANEL UP-004 SCHEDULE	E-148
DETAILS MOLE SUBSTATION ELECTRICAL CABLE TRAY SUPPORTS	E-149
DETAILS MOLE SUBSTATION ELECTRICAL SECTIONS	E-150 TO E-151
DETAILS MOLE SUBSTATION ELECTRICAL TYPICAL TRAY SUPPORTS	E-152
DETAILS MOLE SUBSTATION ELECTRICAL TYPICAL GROUNDING	E-153
SCADA REMOTE TERMINAL UNIT SYSTEM (LOCATIONS)	E-154
DETAILS SCADA REMOTE TERMINAL UNIT SYSTEM TYPICAL RELAY WIRING DIAGRAM	E-155
DETAILS SCADA REMOTE TERMINAL UNIT SYSTEM RTU #16 ELEMENTARY AND CONECTION DIAGRAM	E-156 TO E-158
DETAILS SCADA REMOTE TERMINAL UNIT SYSTEM COM-22W TERMINAL BOX WIRING DIAGRAM	E-159
DETAILS SCADA REMOTE TERMINAL UNIT SYSTEM COM-22E TERMINAL BOX WIRING DIAGRAM	E-160
DETAILS SCADA REMOTE TERMINAL UNIT SYSTEM COM-MOLE TERMINAL BOX WIRING DIAGRAM	E-161
DETAILS SCADA REMOTE TERMINAL UNIT SYSTEM COM-OAKLAND TERMINAL BOX WIRING DIAGRAM	E-161A
DETAILS SCADA REMOTE TERMINAL UNIT SYSTEM COM-23W TERMINAL BOX WIRING DIAGRAM	E-162
DETAILS SCADA REMOTE TERMINAL UNIT SYSTEM RTU #16 PANEL LAYOUT	E-163
DETAILS SCADA REMOTE TERMINAL UNIT SYSTEM SCADA AND TELEPHONE TERMINAL BOX LAYOUT	E-164
DETAILS SCADA REMOTE TERMINAL UNIT SYSTEM TEL-MOLE TERMINAL CONNECTION DIAGRAM	E-165
DETAILS SCADA REMOTE TERMINAL UNIT SYSTEM TEL-OAKLAND TERMINAL BOX CONNECTION DIAGRAM	E-165A
DETAILS SCADA REMOTE TERMINAL UNIT SYSTEM TEL-22W TERMINAL CONNECTION DIAGRAM	E-166
DETAILS SCADA REMOTE TERMINAL UNIT SYSTEM TEL-23W TERMINAL BOX WIRING DIAGRAM	E-167

ELECTRICAL SHEET INDEX NO.2

NO SCALE

E-2

DIST	COUNTY	ROUTE	KILOMETER POST TOTAL PROJECT	SHEET No	TOTAL SHEETS
04	Ala	80	1.6/2.7	371 R1	643

REGISTERED ELECTRICAL ENGINEER — DATE 05/15/06

1-29-07
PLANS APPROVAL DATE

REGISTERED PROFESSIONAL ENGINEER — JENS ERLINGSSON — NO. 8249 — EXP. 9/30/08 — ELECTRICAL — STATE OF CALIFORNIA

PB POWER, Inc.
A Parsons Brinckerhoff Company
303 Second St., Suite 700N
San Francisco, CA 94107-1317

The State of California or its officers or agents shall not be responsible for the accuracy or completeness of electronic copies of this plan sheet.

To get to the Caltrans web site, go to: http://www.dot.ca.gov

CONTRACT CHANGE ORDER 146

SHEET 27 OF 50

DATE	REVISED BY	DATE	REVISED
2/06		2/06	

CALCULATED/DESIGNED BY: AB — CHECKED BY: FK

DESIGN OVERSIGHT: BEHZAD GOLEMOHAMMADI

STATE OF CALIFORNIA - DEPARTMENT OF TRANSPORTATION — Caltrans

DATE PLOTTED => 2/23/2010
TIME PLOTTED => 9:36:56 AM

LAST REVISION 00-00-00

FOR REDUCED PLANS ORIGINAL SCALE IS IN MILLIMETERS: 0 20 40 60 80

DGN FILE =>T:\13103\MS\pse\OTD-Contract 1\CCO\Electrical\00 Drawing Index\401201ua002.dgn
USERNAME =>holimj

CU 04251

EA 0120L1

DIST	COUNTY	ROUTE	KILOMETER POST TOTAL PROJECT	SHEET No	TOTAL SHEETS
04	Ala	80	1.6/2.7	372 R1	643

REGISTERED ELECTRICAL ENGINEER 05/15/06 DATE

1-29-07
PLANS APPROVAL DATE

REGISTERED PROFESSIONAL ENGINEER JENS ERLINGSSON No. 8249 Exp. 9/30/08 ELECTRICAL STATE OF CALIFORNIA

PB POWER, Inc.
A Parsons Brinckerhoff Company
303 Second St., Suite 700N
San Francisco, CA 94107-1317

The State of California or its officers or agents shall not be responsible for the accuracy or completeness of electronic copies of this plan sheet.

To get to the Caltrans web site, go to: http://www.dot.ca.gov

Caltrans Metric

DRAWING TITLE	DRAWING NO.
DETAILS SCADA REMOTE TERMINAL UNIT SYSTEM TEL-22E TERMINAL CONNECTION DIAGRAM	E-168
DETAILS SCADA REMOTE TERMINAL UNIT SYSTEM CABLE BLOCK DIAGRAMS	E-169
CALL BOX SYSTEM (LOCATIONS)	E-170
DETAILS CALL BOX SYSTEM SCHEDULE	E-171
DETAILS CALL BOX SYSTEM CALL BOX WIRING DIAGRAM	E-172
STRONG MOTION DETECTION SYSTEM (GENERAL PLAN)	E-173
DETAILS STRONG MOTION DETECTION SYSTEM PLAN AT GRADE-MOLE SUBSTATION	E-173A
DETAILS STRONG MOTION DETECTION SYSTEM GIRDER LEVEL PARTIAL PLANS	E-174 TO E-176
DETAILS STRONG MOTION DETECTION SYSTEM GIRDER SECTIONS	E-177
DETAILS STRONG MOTION DETECTION SYSTEM PLAN AT-GRADE	E-178
DETAILS STRONG MOTION DETECTION SYSTEM FREE FIELD AND DOWNHOLE SENSORS	E-179
DETAILS STRONG MOTION DETECTION SYSTEM SCHEDULES	E-180
DETAILS STRONG MOTION DETECTION SYSTEM CABLE BLOCK DIAGRAM	E-180A
DETAILS STRONG MOTION DETECTION SYSTEM SENSOR AND RECORDER ENCLOSURES	E-181
TEMPORARY UNDERGROUND AND ROADWAY AT-GRADE (LIGHTING AND ELECTRICAL SYSTEMS 12.47 KV FEEDER)	E-182
TEMPORARY UNDERGROUND AND ROADWAY AT-GRADE (LIGHTING AND ELECTRICAL SYSTEMS)	E-183 TO E-189
TEMPORARY UNDERGROUND AND ROADWAY AT-GRADE (LIGHTING AND ELECTRICAL SYSTEMS EXISTING NORTH SIDE)	E-190 TO E-192
DETAILS TEMPORARY UNDERGROUND AND ROADWAY AT-GRADE PARTIAL PLAN	E-193
DETAILS TEMPORARY UNDERGROUND AND ROADWAY AT GRADE LIGHTING AND ELECTRICAL SYSTEMS EXISTING NORTH SIDE ELECTRICAL PLANS	E-194
DETAILS TEMPORARY UNDERGROUND AND ROADWAY AT-GRADE POLE LINE ELEVATIONS	E-195

DRAWING TITLE	DRAWING NO.
DETAILS TEMPORARY UNDERGROUND AND ROADWAY AT-GRADE SERVICE ENCLOSURE PANEL SCHEDULE	E-196
DETAILS TEMPORARY UNDERGROUND AND ROADWAY AT-GRADE EXISTING SCADA/TELEPHONE AND 40/C CABLE ASSIGNMENT	E-197
TEMPORARY UNDERGROUND AND ROADWAY AT-GRADE (HIGH MAST LIGHTING)	E-198 TO E-199
DETAILS TEMPORARY UNDERGROUND AND ROADWAY AT-GRADE TEMPORARY WOOD POLE	E-200
DETAILS TEMPORARY UNDERGROUND AND ROADWAY AT-GRADE 12.kV AND SCADA/TELEPHONE BLOCK DIAGRAMS	E-201
TEMPORARY UNDERGROUND AND ROADWAY AT-GRADE FIELD ELEMENTS LOCATION	E-202
DETAILS TEMPORARY UNDERGROUND AND ROADWAY AT-GRADE - GENERAL PACKET RADIO SYSTEM WIRELESS MODEM INSTALLATION	E-203
DETAILS TRAFFIC OPERATIONS SYSTEM PREFORMED LOOP DETECTOR STATION INSTALLATION	E-204
TRAFFIC OPERATIONS SYSTEM (FIELD STATIONS LOCATION)	E-205
NOT USED	E-206 TO E-223
DETAILS CONDUIT AND TRAY SCHEDULE	E-224 TO E-228
DETAILS CONDUIT AND TRAY SCHEDULE	E-228A
DETAILS ROADWAY LIGHTING ASSEMBLY	E-229, E-230
DETAILS CONDUIT AND TRAY SCHEDULE	E-230A
DETAILS CONDUIT AND TRAY SCHEDULE	E-231 TO E-242
DETAILS ROADWAY LIGHTING ASSEMBLY	E-243 TO E-247

CONTRACT CHANGE ORDER 146

SHEET 28 OF 50

ELECTRICAL SHEET INDEX NO.3

NO SCALE

E-3

DATE	REVISED BY	DATE	REVISED BY
2/06	FK	2/06	

CALCULATED/DESIGNED BY: AB
CHECKED BY: FK

DESIGN OVERSIGHT: BEHZAD GOLEMOHAMMADI

STATE OF CALIFORNIA - DEPARTMENT OF TRANSPORTATION
Caltrans

LAST REVISION 00-00-00
DATE PLOTTED => 2/23/2010
TIME PLOTTED => 9:38:03 AM

FOR REDUCED PLANS ORIGINAL SCALE IS IN MILLIMETERS 0 20 40 60 80

DGN FILE =>T:\13103\WS\pse\OTD-Contract 1\CCO\Electrical\00 Drawing Index\401201ua003r1.dgn
USERNAME =>hallmj

CU 04251

EA 0120L1

DIST	COUNTY	ROUTE	KILOMETER POST TOTAL PROJECT	SHEET No	TOTAL SHEETS
04	Ala	80	1.6/2.7	395 R2	643

REGISTERED ELECTRICAL ENGINEER 05/15/06 DATE

1-29-07
PLANS APPROVAL DATE

PB POWER, Inc.
A Parsons Brinckerhoff Company
303 Second St., Suite 700N
San Francisco, CA 94107-1317

The State of California or its officers or agents shall not be responsible for the accuracy or completeness of electronic copies of this plan sheet.

To get to the Caltrans web site, go to: http://www.dot.ca.gov

MARK	DATE	DESCRIPTIONS	REV	CK	CCO NO.
2	02/24/10	Re-tag conduit numbers.	JH	EJL	Final Routing & Misc
1	01/15/09	Added pipe sleeves, sheet notes 6, 7, 8, 9, 10, notes 4. Relocated conduits. Revised sheet note 1 and note 3.	EJL	FSW	78 80

REVISIONS

CONTRACT CHANGE ORDER NO. 146
SHEET 29 OF 50

SHEET NOTES:

(1) Coordinate installation of conduits with Hinge EW structural details. Connect to existing. △1

(2) Refer to sheets E-32, E-33 and E-34 for conduit support location. Refer to E-35 and E-36 drawings for conduit support details.

(3) See sheet E-13 for continuation.

(4) See Detail 1 on sheet E-43.

(5) The segment of conduit through the hinge to this point, 800 mm beyond face of diaphragm, shall be installed first according to the structural construction sequence. Continuation of the conduits from this interface point shall be made using threaded conduit couplings. △1

(6) Provided with pipe sleeves for conduits.

(7) Conduits are provided with pipe sleeves. The Contractor shall ensure that conduits are solidly secured or anchored at this location.

(8) The Contractor to provide non-removable warning sign above or before the girder access opening. The sign shall read "Caution - Authorized Personnel Only. Electricals Inside".

(9) Conduit end shall be provided with ground bushing. Bond all conduits with #2 AWG bare copper wire, connected to the ground bar, see Detail 1, sheet E-43.

(10) The system ground, #500 kcMIL shall be routed along the 15 kV conduit run or conduit as shown with U-bolts strap to the conduit.

NOTES:

1. References:
   - TOS equipment is shown for conduit routing only. For typical details of TOS controller and devices, see sheets starting at E-204.
   - For types of pull boxes, splice boxes and enclosures, see sheet E-44.
   - For overall grounding plan, see sheet E-42.
   - For conduit and cable tray schedules, see sheets starting at E-224.
2. For overall plan of this area, see sheet E-13.
3. △1 ~~(x) For dimensions, see structures sheets.~~ DELETED
4. Once the conduits are installed on the TOS/COM and 15 kV vaults, Contractor to grout the conduit block outs.

REGISTERED PROFESSIONAL ENGINEER DAVID H. OTO No. 10699 Exp. 06/30/2011 ELECTRICAL STATE OF CALIFORNIA △2

REGISTERED PROFESSIONAL ENGINEER FADI WALIEDDINE No. 11465 Exp. 12/31/2009 ELECTRICAL STATE OF CALIFORNIA △1

REGISTERED PROFESSIONAL ENGINEER JENS ERL INGOSSON No. 8249 Exp. 9/30/08 ELECTRICAL STATE OF CALIFORNIA

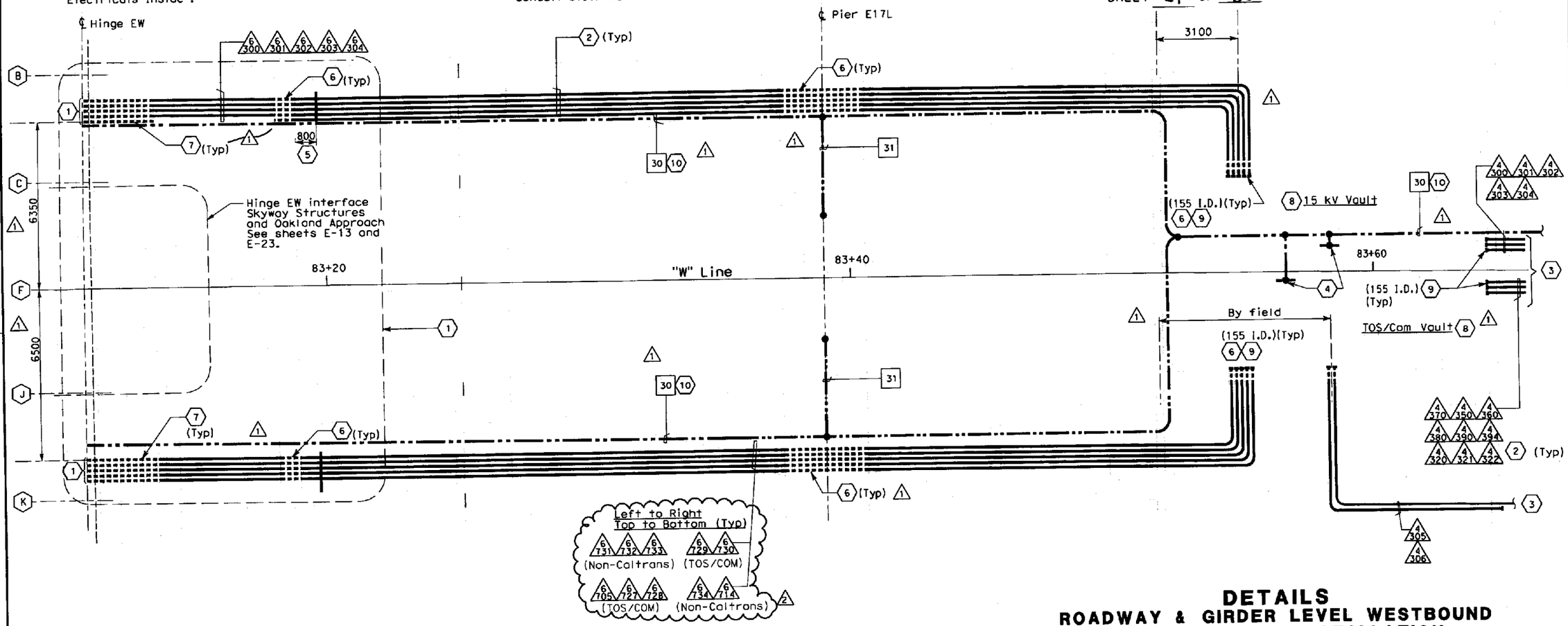

DETAIL 1 - HINGE EW AND PIER E17L

DETAILS
ROADWAY & GIRDER LEVEL WESTBOUND GIRDER CONDUIT INSTALLATION
SCALE 1:75

E-24

STATE OF CALIFORNIA - DEPARTMENT OF TRANSPORTATION
Caltrans

DESIGN OVERSIGHT: BEHZAD GOLEMOHAMMADI

CALCULATED/DESIGNED BY	CHECKED BY	REVISED BY	DATE REVISED
FK	AB		
DATE 2/06	2/06		

LAST REVISION 00-00-00
DATE PLOTTED => 2/24/2010
TIME PLOTTED => 9:20:01 AM

FOR REDUCED PLANS ORIGINAL SCALE IS IN MILLIMETERS 0 20 40 60 80

DGN FILE =>T:\13103\MS\pse\OTD-Contract 1\CCO\Electrical\CCO-Final Routing\40120lua024r2.dgn
USERNAME =>llorico

CU 04251 | EA 0120L1

DIST	COUNTY	ROUTE	KILOMETER POST TOTAL PROJECT	SHEET No	TOTAL SHEETS
04	Ala	80	1.6/2.7	430 R1	643

REGISTERED ELECTRICAL ENGINEER 05/15/06 DATE

1-29-07
PLANS APPROVAL DATE

REGISTERED PROFESSIONAL ENGINEER JENS ERLINGSSON No. 8249 Exp. 9/30/08 ELECTRICAL STATE OF CALIFORNIA

PB POWER, Inc.
A Parsons Brinckerhoff Company
303 Second St., Suite 700N
San Francisco, CA 94107-1317

The State of California or its officers or agents shall not be responsible for the accuracy or completeness of electronic copies of this plan sheet.

To get to the Caltrans web site, go to http://www.dot.ca.gov

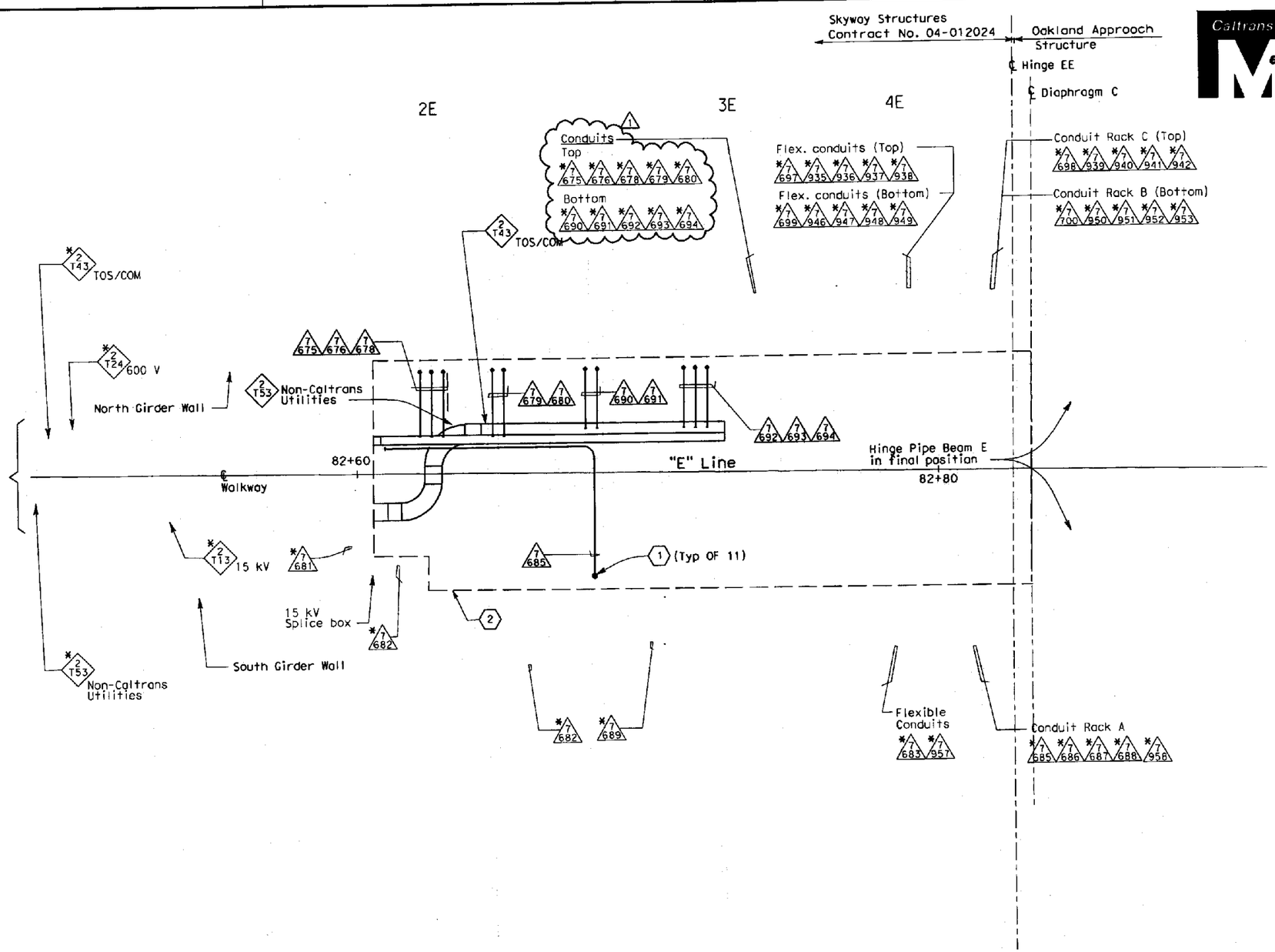

SHEET NOTES:

(1) Extend conduits to cable tray.

(2) Electrical items inside this boundary shall be installed in Hinge EE final position.

NOTES:

1. Minimum radius of cable tray fittings shall be 610 mm.
2. Minimum radius of 103 mm conduit bends shall be 610 mm.
3. Cables/circuits passing through the hinge locations shall be provided with cable identification tag at both ends of Hinge. See Conduit and Troy Schedule, see sheets starting E-224.
4. Install conduits and cable trays only.
5. (*) Existing conduits and cable trays.

REGISTERED PROFESSIONAL ENGINEER DAVID H. OTO No. 10699 Exp. 06/30/2011 ELECTRICAL STATE OF CALIFORNIA

PLAN - HINGE EE

SCALE: 1:75

MARK	DATE	DESCRIPTIONS	REV	CK	CCO NO.
1	2/24/10	Re-tag conduit numbers.	JH	EJL	Final Routing & Misc

REVISIONS

CONTRACT CHANGE ORDER NO. 146
SHEET 30 OF 50

DETAILS
ROADWAY AND GIRDER LEVEL EASTBOUND HINGE EE INTERFACE SKYWAY AND OAKLAND APPROACH STRUCTURES

SCALE AS NOTED

E-59

STATE OF CALIFORNIA - DEPARTMENT OF TRANSPORTATION
Caltrans

DESIGN OVERSIGHT
BEHZAD GOLEMOHAMMADI

CALCULATED/DESIGNED BY	FK	DATE 2/06	REVISED BY
CHECKED BY	AB	2/06	DATE REVISED

FOR REDUCED PLANS ORIGINAL SCALE IS IN MILLIMETERS 0 20 40 60 80

DGN FILE =>t:\13103\ms\pse\OTD-Contract 1\CCO\Electrical\CCO-Final Routing\2010-02-24 Submittal\40120luc059r1.dgn
USERNAME =>llorico

CU 04251 EA 0120L1

LAST REVISION 00-00-00 DATE PLOTTED => 2/23/2010 TIME PLOTTED => 1:40:11 PM

DIST	COUNTY	ROUTE	KILOMETER POST TOTAL PROJECT	SHEET No	TOTAL SHEETS
04	Ala	80	1.6/2.7	578 R3	643

REGISTERED ELECTRICAL ENGINEER 05/15/06 DATE

1-29-07
PLANS APPROVAL DATE

PB POWER, Inc.
A Parsons Brinckerhoff Company
303 Second St., Suite 700N
San Francisco, CA 94107-1317

REGISTERED PROFESSIONAL ENGINEER JENS ERLINGSSON No. 8249 Exp. 9/30/08 ELECTRICAL STATE OF CALIFORNIA

The State of California or its officers or agents shall not be responsible for the accuracy or completeness of electronic copies of this plan sheet.

To get to the Caltrans web site, go to: http://www.dot.ca.gov

REGISTERED PROFESSIONAL ENGINEER FADI WALIEDDINE No. 11465 Exp. 12/31/2009 ELECTRICAL STATE OF CALIFORNIA

REGISTERED PROFESSIONAL ENGINEER DAVID H. OTO No. 10689 Exp. 06/30/2011 ELECTRICAL STATE OF CALIFORNIA

Caltrans Metric

CONDUIT DATA

ROADWAY AND GIRDER LEVEL WESTBOUND

Conduit No	Reference	Size	Type	Total Fill (mm²)	Allowable Fill (mm²)	Cable Area (mm²)	Included Cable No.	Conductor Type
1804	E-10, E-11	41	RGS conduit	49.21	534.55	0.00	Pull Rope 1	Soft-Fiber Polyester
						49.21	UP172-2B	2+1gnd #12,#12, 600 V, RHH/RHW insulation
1805	E-11	41	RGS conduit	49.21	534.55	0.00	Pull Rope 1	Soft-Fiber Polyester
						49.21	UP172-2B	2+1gnd #12,#12, 600 V, RHH/RHW insulation
1806	E-11	41	RGS conduit	49.21	534.55	49.21	UP172-2B	2+1gnd #12,#12, 600 V, RHH/RHW insulation
						0.00	Pull Rope 1	Soft-Fiber Polyester
1807	E-11	41	RGS conduit	49.21	534.55	49.21	UP172-2B	2+1gnd #12,#12, 600 V, RHH/RHW insulation
						0.00	Pull Rope 1	Soft-Fiber Polyester
1808	E-11	41	RGS conduit	49.21	534.55	0.00	Pull Rope 1	Soft-Fiber Polyester
						49.21	UP172-2B	2+1gnd #12,#12, 600 V, RHH/RHW insulation
1809	E-11	41	RGS conduit	49.21	534.55	0.00	Pull Rope 1	Soft-Fiber Polyester
						49.21	UP172-2B	2+1gnd #12,#12, 600 V, RHH/RHW insulation
1821	E-11, E-12	41	RGS conduit	49.21	534.55	49.21	UP172-2B	2+1gnd #12,#12, 600 V, RHH/RHW insulation
						0.00	Pull Rope 1	Soft-Fiber Polyester
1822	E-12	41	RGS conduit	49.21	534.55	49.21	UP172-2B	2+1gnd #12,#12, 600 V, RHH/RHW insulation
						0.00	Pull Rope 1	Soft-Fiber Polyester
1823	E-12	41	RGS conduit	0.00	534.55	0.00	Pull Rope 1	Soft-Fiber Polyester
1824	E-12	41	RGS conduit	0.00	534.55	0.00	Pull Rope 1	Soft-Fiber Polyester
1825	E-12	41	RGS conduit	0.00	534.55	0.00	Pull Rope 1	Soft-Fiber Polyester
1826	E-12	41	RGS conduit	0.00	534.55	0.00	Pull Rope 1	Soft-Fiber Polyester
1827	E-12	41	RGS conduit	0.00	534.55	0.00	Pull Rope 1	Soft-Fiber Polyester
1T25	E-30	610	152 mm siderail ladder tray	2403.42	16774.16	1201.71	1473-26	50 pair #18, shielded pairs, IS/OS shield 600 V, XLPE insul., PVC jacket
						1201.71	1474-26	50 pair #18, shielded pairs, IS/OS shield 600 V, XLPE insul., PVC jacket
1T40	E-30	305	152 mm siderail ladder tray	2369.15	19354.80	366.1	1626	1-3/C + gnd #4, 600 V, EPR insulation
						366.1	1627	1-3/C + gnd #4, 600 V, EPR insulation
						69.36	1656-1	1- 4/C #16 with overall shield, 600 V, FR-EP insulation, CPE jacket
						69.36	1656-2	1- 4/C #16 with overall shield, 600 V, FR-EP insulation, CPE jacket
						324.29	A-1005	1-3/C + gnd #6, 600 V, EPR insulation
						262.70	A-1006	1-3/C + gnd #8, 600 V, EPR insulation
						262.70	A-1007	1-3/C + gnd #8, 600 V, EPR insulation
						~~324.29~~	~~A-1008~~	~~1-3/C + gnd #6, 600 V, EPR insulation~~
						0	Pull Rope 1	Soft-Fiber Polyester
						324.29	S-1601	1-3/C + gnd #6, 600 V, EPR insulation
						324.29	S-1602	1-3/C + gnd #6, 600 V, EPR insulation
1T43	E-23	305	152 mm siderail ladder tray	2403.42	8387.08	1201.71	1473-24	50 pair #18, shielded pairs, IS/OS shield 600 V, XLPE insul., PVC jacket
						1201.71	1474-24	50 pair #18, shielded pairs, IS/OS shield 600 V, XLPE insul., PVC jacket
4300	E-25, E-24	103	RGS conduit	0.00	3324.51	0.00	Pull Rope 1	Soft-Fiber Polyester
4301	E-25, E-24	103	RGS conduit	0.00	3324.51	0.00	Pull Rope 1	Soft-Fiber Polyester
4302	E-25, E-24	103	RGS conduit	0.00	3324.51	0.00	Pull Rope 1	Soft-Fiber Polyester
4303	E-25, E-24	103	RGS conduit	0.00	3324.51	0.00	Pull Rope 1	Soft-Fiber Polyester
4304	E-25, E-24	103	RGS conduit	0.00	3324.51	0.00	Pull Rope 1	Soft-Fiber Polyester
4305	E-25, E-24	103	RGS conduit	0.00	3324.51	0.00	Pull Rope 1	Soft-Fiber Polyester
4306	E-25, E-24	103	RGS conduit	0.00	3324.51	0.00	Pull Rope 1	Soft-Fiber Polyester
4307	E-30	103	RGS conduit	0.00	3324.51	0.00	Pull Rope 1	Soft-Fiber Polyester
4308	E-30	103	RGS conduit	0.00	3324.51	0.00	Pull Rope 1	Soft-Fiber Polyester
4309	E-30	103	RGS conduit	0.00	3324.51	0.00	Pull Rope 1	Soft-Fiber Polyester
4310	E-30	103	RGS conduit	0.00	3324.51	0.00	Pull Rope 1	Soft-Fiber Polyester
4311	E-30	103	RGS conduit	0.00	2576.49	0.00	Pull Rope 1	Soft-Fiber Polyester
4313	E-26, E-25	103	RGS conduit	0.00	3324.51	0.00	Pull Rope 1	Soft-Fiber Polyester
4314	E-26, E-25	103	RGS conduit	0.00	3324.51	0.00	Pull Rope 1	Soft-Fiber Polyester
4315	E-26, E-25	103	RGS conduit	0.00	3324.51	0.00	Pull Rope 1	Soft-Fiber Polyester
4316	E-26, E-25	103	RGS conduit	0.00	3324.51	0.00	Pull Rope 1	Soft-Fiber Polyester
4317	E-26, E-25	103	RGS conduit	0.00	3324.51	0.00	Pull Rope 1	Soft-Fiber Polyester
4320	E-25, E-24	103	RGS conduit	0.00	3324.51	0.00	Pull Rope 1	Soft-Fiber Polyester
4321	E-25, E-24	103	RGS conduit	0.00	3324.51	0.00	Pull Rope 1	Soft-Fiber Polyester

4322

CONDUIT DATA

ROADWAY AND GIRDER LEVEL WESTBOUND

Conduit No	Reference	Size	Type	Total Fill (mm²)	Allowable Fill (mm²)	Cable Area (mm²)	Included Cable No.	Conductor Type
4322	E-25, E-24	103	RGS conduit	0.00	3324.51	0.00	Pull Rope 1	Soft-Fiber Polyester
4323	E-26, E-25	103	RGS conduit	0.00	3324.51	0.00	Pull Rope 1	Soft-Fiber Polyester
4324	E-25, E-26	103	RGS conduit	0.00	3324.51	0.00	Pull Rope 1	Soft-Fiber Polyester
4325	E-25, E-26	103	RGS conduit	0.00	3324.51	0.00	Pull Rope 1	Soft-Fiber Polyester
4328	E-28, E-26, E-27	103	RGS conduit	0.00	3324.51	0.00	Pull Rope 1	Soft-Fiber Polyester
4329	E-28, E-26, E-27	103	RGS conduit	0.00	3324.51	0.00	Pull Rope 1	Soft-Fiber Polyester
4330	E-28, E-26, E-27	103	RGS conduit	0.00	3324.51	0.00	Pull Rope 1	Soft-Fiber Polyester
4331	E-28, E-26, E-27	103	RGS conduit	0.00	3324.51	0.00	Pull Rope 1	Soft-Fiber Polyester
4332	E-28, E-26, E-27	103	RGS conduit	0.00	3324.51	0.00	Pull Rope 1	Soft-Fiber Polyester
4337	E-30	103	RGS conduit	0.00	3324.51	0.00	Pull Rope 1	Soft-Fiber Polyester
4338	E-30	103	RGS conduit	0.00	3324.51	0.00	Pull Rope 1	Soft-Fiber Polyester
4344	E-30	103	RGS conduit	0.00	3324.51	0.00	Pull Rope 1	Soft-Fiber Polyester
4345	E-21	103	RGS-PVC coated conduit	1201.71	4404.97	1201.71	1473-25	50 pair #18, shielded pairs, IS/OS shield 600 V, XLPE insul., PVC jacket
						0.00	Pull Rope 1	Soft-Fiber Polyester
4346	E-21	103	RGS-PVC coated conduit	1201.71	4404.97	0.00	Pull Rope 1	Soft-Fiber Polyester
						1201.71	1473-26	50 pair #18, shielded pairs, IS/OS shield 600 V, XLPE insul., PVC jacket
4347	E-28, E-26, E-27	103	RGS conduit	0.00	3324.51	0.00	Pull Rope 1	Soft-Fiber Polyester
4348	E-28, E-26, E-27	103	RGS conduit	0.00	3324.51	0.00	Pull Rope 1	Soft-Fiber Polyester
4349	E-28, E-26, E-27	103	RGS conduit	0.00	3324.51	0.00	Pull Rope 1	Soft-Fiber Polyester
4350	E-24, E-25	103	RGS conduit	1201.71	4404.97	0.00	Pull Rope 1	Soft-Fiber Polyester
						1201.71	1473-24	50 pair #18, shielded pairs, IS/OS shield 600 V, XLPE insul., PVC jacket
4351	E-26, E-25	103	RGS conduit	1201.71	4404.97	1201.71	1473-25	50 pair #18, shielded pairs, IS/OS shield 600 V, XLPE insul., PVC jacket
						0.00	Pull Rope 1	Soft-Fiber Polyester
4352	E-27, E-26	103	RGS conduit	1201.71	4404.97	0.00	Pull Rope 1	Soft-Fiber Polyester
						1201.71	1473-25	50 pair #18, shielded pairs, IS/OS shield 600 V, XLPE insul., PVC jacket
4353	E-28, E-27	103	RGS conduit	2403.42	2576.49	0.00	Pull Rope 1	Soft-Fiber Polyester
						1201.71	1473-26	50 pair #18, shielded pairs, IS/OS shield 600 V, XLPE insul., PVC jacket
						1201.71	1474-26	50 pair #18, shielded pairs, IS/OS shield 600 V, XLPE insul., PVC jacket

For continuation, see next sheet.

MARK	DATE	DESCRIPTIONS	REV	CK	CCO NO.
3	2/24/10	Revised cable routed inside cable tray 1T40.	JH	EJL	Final Routing & Misc.
2	1/29/10	Revised cable routed inside cable tray 1T40.	JH	EJL	Conductor Change/ Misc.
1	8/29/08	Added cable/ckts A-1006, A-1007, A-1008	JH	EJL	Light Pipe

REVISIONS

CONTRACT CHANGE ORDER NO. 146
SHEET 31 OF 50

DETAILS
CONDUIT AND TRAY SCHEDULE

E-225

STATE OF CALIFORNIA - DEPARTMENT OF TRANSPORTATION
Caltrans

DESIGN OVERSIGHT: BEHZAD GOLEMOHAMMADI

CALCULATED/DESIGNED BY: FK | CHECKED BY: AB | DATE 2/06 | REVISED BY | DATE REVISED

LAST REVISION 00-00-00 | DATE PLOTTED => 2/23/2010 | TIME PLOTTED => 1:40:29 PM

FOR REDUCED PLANS ORIGINAL SCALE IS IN MILLIMETERS 0 20 40 60 80

DGN FILE =>t:\13103\ms\pse\DTD-Contract 1\CCO\Electrical\CCO-Final Routing\2010-02-24 Submittal\40120lua225r3.dgn
USERNAME =>llorico

CU 04251 | EA 0120L1

DIST	COUNTY	ROUTE	KILOMETER POST TOTAL PROJECT	SHEET No	TOTAL SHEETS
04	Ala	80	1.6/2.7	579 R3	643

REGISTERED ELECTRICAL ENGINEER 05/15/06 DATE

1-29-07
PLANS APPROVAL DATE

PB POWER, Inc.
A Parsons Brinckerhoff Company
303 Second St., Suite 700N
San Francisco, CA 94107-1317

The State of California or its officers or agents shall not be responsible for the accuracy or completeness of electronic copies of this plan sheet.

To get to the Caltrans web site, go to: http://www.dot.ca.gov

REGISTERED PROFESSIONAL ENGINEER FADI WALIEDDINE No. 11465 Exp. 12/31/2009 ELECTRICAL STATE OF CALIFORNIA

REGISTERED PROFESSIONAL ENGINEER DAVID H. OTO No. 10699 Exp. 06/30/2011 ELECTRICAL STATE OF CALIFORNIA

REGISTERED PROFESSIONAL ENGINEER JENS ERLINGSSON No. 8249 Exp. 9/30/08 ELECTRICAL STATE OF CALIFORNIA

Caltrans Metric

MARK	DATE	DESCRIPTIONS	REV	CK	CCO NO.
3	2/24/10	Revised cable routed inside conduit 4413 and 4418.	JH	EJL	Final Routing & Misc.
2	1/29/10	Revised cable routed inside conduit 4411.	JH	EJL	Conductor Change/ Misc.
1	8/29/08	Added cable/ckts A-1006, A-1007	JH	EJL	Light Pipe

REVISIONS

CONTRACT CHANGE ORDER NO. 146
SHEET 32 OF 50

CONDUIT DATA

ROADWAY AND GIRDER LEVEL WESTBOUND

Conduit No	Reference	Size	Type	Total Fill (mm²)	Allowable Fill (mm²)	Cable Area (mm²)	Included Cable No.	Conductor Type
4354	E-30	103	RGS conduit	0.00 △2	3324.51	0.00	Pull Rope 1	Soft-Fiber Polyester
						~~1201.71~~	~~1474-26~~	~~50 pair #18, shielded pairs, IS/OS shield 600 V, XLPE insul., PVC jacket~~
4355	E-20	103	RGS-PVC coated conduit	2403.42	2576.49	1201.71	1474-24	50 pair #18, shielded pairs, IS/OS shield 600 V, XLPE insul., PVC jacket
						0.00	Pull Rope 1	Soft-Fiber Polyester
						1201.71	1474-25	50 pair #18, shielded pairs, IS/OS shield 600 V, XLPE insul., PVC jacket
4356	E-21	103	RGS-PVC coated conduit	2403.42	2576.49	0.00	Pull Rope 1	Soft-Fiber Polyester
						1201.71	1474-26	50 pair #18, shielded pairs, IS/OS shield 600 V, XLPE insul., PVC jacket
						1201.71	1474-25	50 pair #18, shielded pairs, IS/OS shield 600 V, XLPE insul., PVC jacket
4357	E-20	103	RGS-PVC coated conduit	1201.71	4404.97	1201.71	1473-24	50 pair #18, shielded pairs, IS/OS shield 600 V, XLPE insul., PVC jacket
						0.00	Pull Rope 1	Soft-Fiber Polyester
4358	E-20	103	RGS-PVC coated conduit	1201.71	4404.97	1201.71	1473-25	50 pair #18, shielded pairs, IS/OS shield 600 V, XLPE insul., PVC jacket
						0.00	Pull Rope 1	Soft-Fiber Polyester
4359	E-25	103	RGS conduit	1201.71	4404.97	1201.71	1474-24	50 pair #18, shielded pairs, IS/OS shield 600 V, XLPE insul., PVC jacket
						0.00	Pull Rope 1	Soft-Fiber Polyester
4360	E-25, E-24	103	RGS conduit	1201.71	4404.97	0.00	Pull Rope 1	Soft-Fiber Polyester
						1201.71	1474-24	50 pair #18, shielded pairs, IS/OS shield 600 V, XLPE insul., PVC jacket
4361	E-26, E-25	103	RGS conduit	1201.71	4404.97	1201.71	1474-25	50 pair #18, shielded pairs, IS/OS shield 600 V, XLPE insul., PVC jacket
						0.00	Pull Rope 1	Soft-Fiber Polyester
4362	E-27, E-26	103	RGS conduit	1201.71	4404.97	1201.71	1474-25	50 pair #18, shielded pairs, IS/OS shield 600 V, XLPE insul., PVC jacket
						0.00	Pull Rope 1	Soft-Fiber Polyester
4363	E-28, E-27	103	RGS conduit	0.00 △2	3324.51	~~1201.71~~	~~1474-26~~	~~50 pair #18, shielded pairs, IS/OS shield 600 V, XLPE insul., PVC jacket~~
						0.00	Pull Rope 1	Soft-Fiber Polyester
4364	E-30	103	RGS conduit	0.00	3324.51	0.00	Pull Rope 1	Soft-Fiber Polyester
4365	E-25	103	RGS conduit	1201.71	4404.97	1201.71	1473-24	50 pair #18, shielded pairs, IS/OS shield 600 V, XLPE insul., PVC jacket
						0.00	Pull Rope 1	Soft-Fiber Polyester
4370	E-25, E-24	103	RGS conduit	0.00	3324.51	0.00	Pull Rope 1	Soft-Fiber Polyester
4371	E-25, E-26	103	RGS conduit	0.00	3324.51	0.00	Pull Rope 1	Soft-Fiber Polyester
4372	E-28, E-26, E-27	103	RGS conduit	0.00	3324.51	0.00	Pull Rope 1	Soft-Fiber Polyester
4373	E-27, E-28	103	RGS conduit	0.00	3324.51	0.00	Pull Rope 1	Soft-Fiber Polyester
4374	E-30	103	RGS conduit	0.00	3324.51	0.00	Pull Rope 1	Soft-Fiber Polyester
4375	E-30	103	RGS conduit	0.00	3324.51	0.00	Pull Rope 1	Soft-Fiber Polyester
4376	E-21	103	RGS-PVC coated conduit	0.00	3324.51	0.00	Pull Rope 1	Soft-Fiber Polyester
4377	E-21	103	RGS-PVC coated conduit	0.00	3324.51	0.00	Pull Rope 1	Soft-Fiber Polyester
4379	E-25	103	RGS conduit	0.00	3324.51	0.00	Pull Rope 1	Soft-Fiber Polyester
4380	E-25, E-24	103	RGS conduit	0.00	3324.51	0.00	Pull Rope 1	Soft-Fiber Polyester
4381	E-26, E-25	103	RGS conduit	0.00	3324.51	0.00	Pull Rope 1	Soft-Fiber Polyester
4382	E-27, E-26	103	RGS conduit	0.00	3324.51	0.00	Pull Rope 1	Soft-Fiber Polyester
4383	E-28, E-27	103	RGS conduit	0.00	3324.51	0.00	Pull Rope 1	Soft-Fiber Polyester
4384	E-20	103	RGS-PVC coated conduit	0.00	3324.51	0.00	Pull Rope 1	Soft-Fiber Polyester
4385	E-21, E-22	78	RGS-PVC coated conduit	0.00	1935.24	0.00	Pull Rope 1	Soft-Fiber Polyester
4386	E-21	53	RGS-PVC coated conduit	0.00	879.42	0.00	Pull Rope 1	Soft-Fiber Polyester
4387	E-20	53	RGS-PVC coated conduit	0.00	879.42	0.00	Pull Rope 1	Soft-Fiber Polyester
4388	E-20, E-22	78	RGS-PVC coated conduit	0.00	1935.24	0.00	Pull Rope 1	Soft-Fiber Polyester
4389	E-20	103	RGS-PVC coated conduit	0.00	3324.51	0.00	Pull Rope 1	Soft-Fiber Polyester
4390	E-25, E-24	103	RGS conduit	0.00	3324.51	0.00	Pull Rope 1	Soft-Fiber Polyester
4391	E-26, E-25	103	RGS conduit	0.00	3324.51	0.00	Pull Rope 1	Soft-Fiber Polyester
4392	E-27, E-26	103	RGS conduit	0.00	3324.51	0.00	Pull Rope 1	Soft-Fiber Polyester

CONDUIT DATA

ROADWAY AND GIRDER LEVEL WESTBOUND

Conduit No	Reference	Size	Type	Total Fill (mm²)	Allowable Fill (mm²)	Cable Area (mm²)	Included Cable No.	Conductor Type
4393	E-28, E-27	103	RGS conduit	0.00	3324.51	0.00	Pull Rope 1	Soft-Fiber Polyester
4394	E-25, E-24	103	RGS conduit	0.00	3324.51	0.00	Pull Rope 1	Soft-Fiber Polyester
4395	E-28, E-26, E-27	103	RGS conduit	0.00	3324.51	0.00	Pull Rope 1	Soft-Fiber Polyester
4396	E-26, E-25	103	RGS conduit	0.00	3324.51	0.00	Pull Rope 1	Soft-Fiber Polyester
4397	E30	103	RGS conduit	0.00	3324.51	0.00	Pull Rope 1	Soft-Fiber Polyester
4398	E-30	103	RGS conduit	2403.42 △2	2576.49	0.00	Pull Rope 1	Soft-Fiber Polyester
						1201.71	1473-26	50 pair #18, shielded pairs, IS/OS shield 600 V, XLPE insul., PVC jacket
						1201.71	1474-26	50 pair #18, shielded pairs, IS/OS shield 600 V, XLPE insul., PVC jacket
4399	E30	103	RGS conduit	0.00	3324.51	0.00	Pull Rope 1	Soft-Fiber Polyester
4400	E-25	103	RGS conduit	0.00	3324.51	0.00	Pull Rope 1	Soft-Fiber Polyester
4401	E-14, E-25	41	RGS conduit △1	311.89	534.55	0.00	Pull Rope 1	Soft-Fiber Polyester
						49.21	UP171-2A	2+1gnd #12, #12, 600 V, RHH/RHW insulation
						262.68	A-1006	1-3/C + gnd #8, 600 V EPR insulation
4402	E-14, E-25	41	RGS conduit	311.89	708.28	0.00	Pull Rope 1	Soft-Fiber Polyester
						262.68	A-1007	1-3/C + gnd #8, 600 V EPR insulation
4403	E-25	41	RGS conduit	324.29	708.28	324.29	A-1005	1-3/C+gnd #6, 600 V, EPR insulation
						0.00	Pull Rope 1	Soft-Fiber Polyester
4404	E-25	41	RGS conduit	324.29	708.28	324.29	S-1601	1-3/C+gnd #6, 600 V, EPR insulation
						0.00	Pull Rope 1	Soft-Fiber Polyester
4408	E-14, E-26	41	RGS conduit	175.89	534.55	175.89	A-1005-2	3-1/C #6, 600 V, RHH/RHW insulation
						0.00	Pull Rope 1	Soft-Fiber Polyester
4409	E-14, E-26	41	RGS conduit	49.21	534.55	49.21	UP172-2B	2+1gnd #12, #12, 600 V, RHH/RHW insulation
						0.00	Pull Rope 1	Soft-Fiber Polyester
4410	E-14, E-26	41	RGS conduit	98.10	708.28	0.00	Pull Rope 1	Soft-Fiber Polyester
						98.10	1804	1 - 2 pair, shielded #18 with IS/OA , 600 V, PVC
4411	E-26, E-25	103	RGS conduit	393.65 △2	2576.49	69.36	1656-1	1- 4/C #16 with overall shield, 600 V, FR-EP insulation, CPE jacket
						0.00	Pull Rope 1	Soft-Fiber Polyester
						324.29	S-1601	1-3/C + gnd #6, 600 V, EPR insulation
4412	E-26, E-25	103	RGS conduit	366.10	4404.97	0.00	Pull Rope 1	Soft-Fiber Polyester
						366.10	1626	1-3/C+gnd #4, 600 V, EPR insulation
4413	E-26, E-25	103	RGS conduit	849.65 △3	3324.51	0.00	Pull Rope 1	Soft-Fiber Polyester
						324.29	A-1005	1-3/C+gnd #6, 600 V, EPR insulation
						262.68	A-1006	1-3/C+gnd #8, 600 V, EPR insulation
						262.68	A-1007	1-3/C+gnd #8, 600 V, EPR insulation
4416	E-27	103	RGS conduit	0.00	3324.51	0.00	Pull Rope 1	Soft-Fiber Polyester
4417	E-27	103	RGS conduit	0.00	3324.51	0.00	Pull Rope 1	Soft-Fiber Polyester
4418	E-26, E25	103	RGS conduit △1	0.00 △3	3324.51	0.00	Pull Rope 1	Soft-Fiber Polyester
						~~262.68~~	~~A-1006~~	~~1-3/C + gnd #8, 600 V, EPR insulation~~
						~~262.68~~	~~A-1007~~	~~1-3/C + gnd #8, 600 V, EPR insulation~~
4419	E-26, E25, E-27	103	RGS conduit	0.00	3324.51	0.00	Pull Rope 1	Soft-Fiber Polyester

For continuation, see next sheet.

DETAILS
CONDUIT AND TRAY SCHEDULE

E-226

STATE OF CALIFORNIA - DEPARTMENT OF TRANSPORTATION
Caltrans

DESIGN OVERSIGHT
BEHZAD GOLEMOHAMMADI

DATE	FK	CALCULATED/ DESIGNED BY	DATE	REVISED BY
2/06	AB	CHECKED BY	2/06	REVISED

FOR REDUCED PLANS ORIGINAL SCALE IS IN MILLIMETERS 0 20 40 60 80

DGN FILE =>t:\13103\ms\pse\OTO-Contract 1\CCO\Electrical\CCO-Final Routing\2010-02-24 Submittal\40120luo226r3.dgn
USERNAME =>llorico

CU 04251 | EA 0120L1

LAST REVISION 00-00-00
DATE PLOTTED => 2/23/2010
TIME PLOTTED => 11:40:45 PM

MARK	DATE	DESCRIPTIONS	REV	CK	CCO NO.
4	2/24/10	Routed cables UP171-10 and UP172-10 to conduits 4802 and 4832	JH	EJL	Final Routing & Misc
3	1/29/10	Revised cable routed inside conduit 4450, 4814, and 4844.	JH	EJL	Conductor Change/ Misc.
2	8/29/08	Added cable/ckts A-1006, A-1007, A-1008.	JH		LIGHT PIPE
1	4/30/08	Revised cable number routed inside conduit #4801 and #4831	ECR	EJL	65

REVISIONS

CONTRACT CHANGE ORDER NO. 146
SHEET 33 OF 50

Caltrans Metric

DIST	COUNTY	ROUTE	KILOMETER POST TOTAL PROJECT	SHEET No	TOTAL SHEETS
04	Alo	80	1.6/2.7	580 R4	643

REGISTERED ELECTRICAL ENGINEER 05/15/06 DATE

1-29-07
PLANS APPROVAL DATE

PB POWER, Inc.
A Parsons Brinckerhoff Company
303 Second St., Suite 700N
San Francisco, CA 94107-1317

REGISTERED PROFESSIONAL ENGINEER JENS ERLINGSSON No. 6249 Exp. 9/30/06 ELECTRICAL STATE OF CALIFORNIA

The State of California or its officers or agents shall not be responsible for the accuracy or completeness of electronic copies of this plan sheet.

To get to the Caltrans web site, go to http://www.dot.ca.gov

REGISTERED PROFESSIONAL ENGINEER DAVID H. OTO No. 10699 Exp. 06/30/2011 ELECTRICAL STATE OF CALIFORNIA

REGISTERED PROFESSIONAL ENGINEER FADI WALIEDDINE No. 11465 Exp. 12/31/2009 ELECTRICAL STATE OF CALIFORNIA

CONDUIT DATA

ROADWAY AND GIRDER LEVEL WESTBOUND

Conduit No	Reference	Size	Type	Total Fill (mm²)	Allowable Fill (mm²)	Cable Area (mm²)	Included Cable No.	Conductor Type
4422	E-27	41	RGS conduit	324.29	708.28	324.29	S-1602	1-3/C+gnd #6, 600 V EPR insulation
						0.00	Pull Rope 1	Soft-Fiber Polyester
4423	E-27	41	RGS conduit	49.21	534.55	49.21	UP172-2A	2+1gnd #12,#12, 600 V, RHH/RHW insulation
						0.00	Pull Rope 1	Soft-Fiber Polyester
4424	E-15, E-27	41	RGS conduit	0.00	534.55	0.00	Pull Rope 1	Soft-Fiber Polyester
4425	E-15, E-27	41	RGS conduit	0.00	534.55	0.00	Pull Rope 1	Soft-Fiber Polyester
4430	E-15, E-28, E-30	41	RGS conduit 2	324.29	708.28	0.00	Pull Rope 1	Soft-Fiber Polyester
						324.29	A-1008	1-3/C+gnd #6, 600 V EPR insulation
4431	E-15, E-28, E-30	41	RGS conduit	0.00	534.55	0.00	Pull Rope 1	Soft-Fiber Polyester
4432	E-14, E-26	41	RGS conduit	0.00	534.55	0.00	Pull Rope 1	Soft-Fiber Polyester
4433	E-14, E-26	41	RGS conduit	0.00	534.55	0.00	Pull Rope 1	Soft-Fiber Polyester
4434	E-14, E-26	41	RGS conduit	98.10	708.28	98.10	1803	1 - 2 pair, shielded #18 with IS/OA , 600 V, PVC
						0.00	Pull Rope 1	Soft-Fiber Polyester
4435	E-15, E-28, E-30	41	RGS conduit	98.10	708.28	98.10	1803	1 - 2 pair, shielded #18 with IS/OA , 600 V, PVC
						0.00	Pull Rope 1	Soft-Fiber Polyester
4436	E-15, E-28, E-30	41	RGS conduit	98.10	708.28	0.00	Pull Rope 1	Soft-Fiber Polyester
						98.10	1804	1 - 2 pair, shielded #18 with IS/OA , 600 V, PVC
4450	E-27, E-28, E-30	103	RGS conduit 2	664.12	3324.51	69.36	1656-1	1- 4/C #16 with overall shield, 600 V, FR-EP insulation, CPE jacket
						69.36	1656-2	1- 4/C #16 with overall shield, 600 V, FR-EP insulation, CPE jacket
						262.70	A-1006	1-3/C + gnd #8, 600 V, EPR insulation 3
						262.70	A-1007	1-3/C + gnd #8, 600 V, EPR insulation
						0.00	Pull Rope 1	Soft-Fiber Polyester
4451	E-27, E-28, E-30	103	RGS conduit	972.87	3324.51	324.29	S-1601	1-3/C+gnd #6, 600 V EPR insulation
						324.29	S-1602	1-3/C+gnd #6, 600 V EPR insulation
						0.00	Pull Rope 1	Soft-Fiber Polyester
						324.29	A-1005	1-3/C+gnd #6, 600 V EPR insulation
4452	E-27, E-28, E-30	103	RGS conduit	732.20	2576.49	366.10	1626	1-3/C+gnd #4, 600 V EPR insulation
						366.10	1627	1-3/C+gnd #4, 600 V EPR insulation
						0.00	Pull Rope 1	Soft-Fiber Polyester
4801	E-20	78	RGS-PVC coated conduit	624.31 1	1935.24	624.31	1626-2	1-4/C+gnd #2, 600 V EPR insulation 1
						0.00	Pull Rope 1	Soft-Fiber Polyester
4802	E-20	78	RGS-PVC coated conduit	49.21	1935.24	0.00	Pull Rope 1	Soft-Fiber Polyester
						49.21	UP171-10	3-1/C #12, 600 V, RHH/RHW insulation 4
4803	E-20	78	RGS-PVC coated conduit	98.42	1935.24	0.00	Pull Rope 1	Soft-Fiber Polyester
						49.21	UP171-2A	2+1gnd #12,#12, 600 V, RHH/RHW insulation
						49.21	UP171-5	3-1/C #12, 600 V, RHH/RHW insulation
4804	E-20	53	RGS-PVC coated conduit	0.00	879.42	0.00	Pull Rope 1	Soft-Fiber Polyester
4805	E-20	103	RGS-PVC coated conduit	0.00	3324.51	0.00	Pull Rope 1	Soft-Fiber Polyester
4811	E-20	78	RGS-PVC coated conduit	366.10	2564.19	366.10	1626	1-3/C+gnd #4, 600 V EPR insulation
						0.00	Pull Rope 1	Soft-Fiber Polyester
4812	E-20	78	RGS-PVC coated conduit	49.21	1935.24	49.21	UP171-2A	2+1gnd #12,#12, 600 V, RHH/RHW insulation
						0.00	Pull Rope 1	Soft-Fiber Polyester
4813	E-20	78	RGS-PVC coated conduit	0.00	1935.24	0.00	Pull Rope 1	Soft-Fiber Polyester
4814	E-20	78	RGS-PVC coated conduit	69.36	2564.19	69.36	1656-1	1-4/C #16 with overall shield, 600 V, FR-EP insulation, CPE jacket
						0.00	Pull Rope 1	Soft-Fiber Polyester 3
4831	E-21	78	RGS-PVC coated conduit	624.31 1	1935.24	0.00	Pull Rope 1	Soft-Fiber Polyester
						624.31	1627-2	1-4/C+gnd #2, 600 V EPR insulation 1
4832	E-21	78	RGS-PVC coated conduit	49.21	1935.24	0.00	Pull Rope 1	Soft-Fiber Polyester
						49.21	UP172-10	3-1/C #12, 600 V, RHH/RHW insulation 4
4833	E-21	78	RGS-PVC coated conduit	98.42	1935.24	0.00	Pull Rope 1	Soft-Fiber Polyester
						49.21	UP172-2A	2+1gnd #12,#12, 600 V, RHH/RHW insulation
						49.21	UP172-5	3-1/C #12, 600 V, RHH/RHW insulation
4837	E-21	78	RGS-PVC coated conduit	0.00	1935.24	0.00	Pull Rope 1	Soft-Fiber Polyester
4841	E-21	78	RGS-PVC coated conduit	415.31	1935.24	0.00	Pull Rope 1	Soft-Fiber Polyester
						49.21	UP172-2A	2+1gnd #12,#12, 600 V, RHH/RHW insulation
						366.10	1627	1-3/C+gnd #4, 600 V EPR insulation
4842	E-21	78	RGS-PVC coated conduit	0.00	1935.24	0.00	Pull Rope 1	Soft-Fiber Polyester
4843	E-21	78	RGS-PVC coated conduit	0.00	1935.24	0.00	Pull Rope 1	Soft-Fiber Polyester
4844	E-21	78	RGS-PVC coated conduit	69.36	2564.19	69.36	1656-2	1-4/C #16 with overall shield, 600 V, FR-EP insulation, CPE jacket
						0.00	Pull Rope 1	Soft-Fiber Polyester 3
4845	E-15, E-27, E-28, E-21	78	RGS-PVC coated conduit	0.00	1935.24	0.00	Pull Rope 1	Soft-Fiber Polyester

CONDUIT DATA

ROADWAY AND GIRDER LEVEL WESTBOUND

Conduit No	Reference	Size	Type	Total Fill (mm²)	Allowable Fill (mm²)	Cable Area (mm²)	Included Cable No.	Conductor Type
6300	E-24	103	RGS conduit	253.35	3324.51	253.35	Pull Rope 1	Soft-Fiber Polyester, 500 kcmil ground
6301	E-24	103	RGS conduit	0.00	3324.51	0.00	Pull Rope 1	Soft-Fiber Polyester
6302	E-24	103	RGS conduit	0.00	3324.51	0.00	Pull Rope 1	Soft-Fiber Polyester
6303	E-24	103	RGS conduit	0.00	3324.51	0.00	Pull Rope 1	Soft-Fiber Polyester
6304	E-24	103	RGS conduit	0.00	3324.51	0.00	Pull Rope 1	Soft-Fiber Polyester
6705	E-24	103	RGS conduit	1201.71	4404.97	1201.71	1474-24	50 pair #18, shielded pairs, IS/OS shield 600 V, XLPE insul., PVC jacket
						0.00	Pull Rope 1	Soft-Fiber Polyester
6727	E-24	103	RGS conduit	1201.71	4404.97	0.00	Pull Rope 1	Soft-Fiber Polyester
						1201.71	1473-24	50 pair #18, shielded pairs, IS/OS shield 600 V, XLPE insul., PVC jacket
6728	E-24	103	RGS conduit	0.00	3324.51	0.00	Pull Rope 1	Soft-Fiber Polyester
6729	E-24	103	RGS conduit	0.00	3324.51	0.00	Pull Rope 1	Soft-Fiber Polyester
6731	E-24	103	RGS conduit	0.00	3324.51	0.00	Pull Rope 1	Soft-Fiber Polyester
6732	E-24	103	RGS conduit	0.00	3324.51	0.00	Pull Rope 1	Soft-Fiber Polyester
6733	E-24	103	RGS conduit	0.00	3324.51	0.00	Pull Rope 1	Soft-Fiber Polyester
6734	E-24	103	RGS conduit	0.00	3324.51	0.00	Pull Rope 1	Soft-Fiber Polyester
6725			Not used					
6952	E-23	103	RGS conduit	0.00	3324.51	0.00	Pull Rope 1	Soft-Fiber Polyester
6964	E-23	103	RGS conduit	1201.71	4404.97	1201.71	1474-24	50 pair #18, shielded pairs, IS/OS shield 600 V, XLPE insul., PVC jacket
						0.00	Pull Rope 1	Soft-Fiber Polyester
6965	E-23	103	RGS conduit	1201.71	4404.97	1201.71	1473-24	50 pair #18, shielded pairs, IS/OS shield 600 V, XLPE insul., PVC jacket
						0.00	Pull Rope 1	Soft-Fiber Polyester
6966	E-23	103	RGS conduit	0.00	3324.51	0.00	Pull Rope 1	Soft-Fiber Polyester
6967	E-23	103	RGS conduit	0.00	3324.51	0.00	Pull Rope 1	Soft-Fiber Polyester
6968	E-23	103	RGS conduit	0.00	3324.51	0.00	Pull Rope 1	Soft-Fiber Polyester
6969	E-23	103	RGS conduit	0.00	3324.51	0.00	Pull Rope 1	Soft-Fiber Polyester
6970	E-23	103	RGS conduit	0.00	3324.51	0.00	Pull Rope 1	Soft-Fiber Polyester
6971	E-23	103	RGS conduit	0.00	3324.51	0.00	Pull Rope 1	Soft-Fiber Polyester
6972	E-23	103	RGS conduit	0.00	3324.51	0.00	Pull Rope 1	Soft-Fiber Polyester
6730	E-24	103	RGS conduit	0.00	3324.51	0.00	Pull Rope 1	Soft-Fiber Polyester
6714	E-24	103	RGS conduit	0.00	3324.51	0.00	Pull Rope 1	Soft-Fiber Polyester

For continuation, see next sheet.

DETAILS
CONDUIT AND TRAY SCHEDULE

E-227

REVISED BY	DATE REVISED
FK	2/06

CALCULATED/ DESIGNED BY	DATE 2/06
AB	
CHECKED BY	

DESIGN OVERSIGHT
BEHZAD GOLEMOHAMMADI

STATE OF CALIFORNIA - DEPARTMENT OF TRANSPORTATION
Caltrans

FOR REDUCED PLANS ORIGINAL SCALE IS IN MILLIMETERS 0 20 40 60 80

DGN FILE =>t:\13103\ms\pse\DTD-Contract 1\CCO\Electrical\CCO-Final Routing\2010-02-24 Submittal\40120luo227r4.dgn
USERNAME =>llorico

CU 04251 | EA 0120L1

LAST REVISION 00-00-00
DATE PLOTTED => 2/23/2010
TIME PLOTTED => 1:41:54 PM

DIST	COUNTY	ROUTE	KILOMETER POST TOTAL PROJECT	SHEET No	TOTAL SHEETS
04	Ala	80	1.6/2.7	581 R2	643

REGISTERED ELECTRICAL ENGINEER 05/15/06 DATE

1-29-07
PLANS APPROVAL DATE

REGISTERED PROFESSIONAL ENGINEER JENS ERLINGSSON No. 8249 Exp. 9/30/08 ELECTRICAL STATE OF CALIFORNIA

PB POWER, Inc.
A Parsons Brinckerhoff Company
303 Second St., Suite 700N
San Francisco, CA 94107-1317

The State of California or its officers or agents shall not be responsible for the accuracy or completeness of electronic copies of this plan sheet.

To get to the Caltrans web site, go to http://www.dot.ca.gov

Caltrans Metric

CONDUIT DATA

ROADWAY AND GIRDER LEVEL WESTBOUND

Conduit No	Reference	Size	Type	Total Fill (mm²)	Allowable Fill (mm²)	Cable Area (mm²)	Included Cable No.	Conductor Type
6973	E-23	103	RGS conduit	0.00	3324.51	0.00	Pull Rope 1	Soft-Fiber Polyester
Wireway 22W	E-20 (Note 3)	~~203~~	~~203 mm x 203 mm wireway~~	~~464.52~~	~~8258.05~~	~~49.21~~	~~UP171-2A~~	~~2 + 1gnd #12, #12, 600V, RHH/RHW insulation~~
						~~366.10~~	~~1626~~	~~1-3/C + gnd #4, 600 V, EPR insulation~~
						~~49.21~~	~~UP171-5~~	~~3-1/C #12, 600 V, RHH/RHW insulation~~
Wireway 23W	E-21 (Note 3)	~~203~~	~~203 mm x 203 mm wireway~~	~~464.52~~	~~8258.05~~	~~49.21~~	~~UP172-2A~~	~~2 + 1 gnd #12, #12, 600 V, RHH/RHW insulation~~
						~~366.10~~	~~1627~~	~~1-3/C + gnd #4, 600 V, EPR insulation~~
						~~49.21~~	~~UP172-5~~	~~3-1/C #12, 600 V, RHH/RHW insulation~~
1T39	E-30	305	152 mm siderail ladder tray	0.00	8387.08	0.00	-	
1T41	E-30	305	152 mm siderail ladder tray	0.00	8387.08	0.00	-	
1T53	E-23	610	152 mm siderail tray	0.00	16774.16	0.00	-	
(E) 1T13	E-23 (Note 1)	150	152 mm siderail ladder					
(E) 1T24	E-23 (Note 1)	610	152 mm siderail ladder					
(E) 1T43	E-23 (Note 2)	305	152 mm siderail tray	2403.42	8387.08	1201.71	1474-24	50 pair #18, shielded pairs, overall shield 600 V, XLPE insul., PVC jacket
						1201.71	1474-24	50 pair #18, shielded pairs, overall shield 600 V, XLPE insul., PVC jacket 2
(E) 1T53	E-23 (Note 1)	610	152 mm siderail tray					
(E) 4979	E-23 (Note 2)	103	RGS conduit		2576.49	1201.71	1473-24	50 pair #18, shielded pairs, overall shield 600 V, XLPE insul., PVC jacket
(E) 4980	E-23 (Note 2)	103	RGS conduit		0.00	0.00	~~1474-24~~	~~50 pair #18, shielded pairs, overall shield 600 V, XLPE insul., PVC jacket~~ 2
(E) 6700	E-23 (Note 1)	103	Liquidtight flex metal					
(E) 6701	E-23 (Note 1)	103	RGS conduit					
(E) 6706	E-23 (Note 1)	103	Liquidtight flex metal					
(E) 6707	E-23 (Note 1)	103	Liquidtight flex metal					
(E) 6708	E-23 (Note 1)	103	Liquidtight flex metal					
(E) 6709	E-23 (Note 1)	103	Liquidtight flex metal					
(E) 6710	E-23 (Note 1)	103	RGS conduit					
(E) 6711	E-23 (Note 1)	103	RGS conduit					
(E) 6712	E-23 (Note 1)	103	RGS conduit					
(E) 6713	E-23 (Note 1)	103	RGS conduit					
(E) 6716	E-23 (Note 2)	103	Liquidtight flex metal conduit	1201.71	4404.97	1201.71	1474-24	50 pair #18, shielded pairs, overall shield 600 V, XLPE insul., PVC jacket
(E) 6717	E-23 (Note 2)	103	Liquidtight flex metal conduit	1201.71	4404.97	1201.71	1473-24	50 pair #18, shielded pairs, overall shield 600 V, XLPE insul., PVC jacket
(E) 6718	E-23 (Note 1)	103	Liquidtight flex metal					
(E) 6719	E-23 (Note 1)	103	Liquidtight flex metal					
(E) 6720	E-23 (Note 1)	103	Liquidtight flex metal					
(E) 6721	E-23 (Note 2)	103	RGS conduit	1201.71	2576.49	1201.71	1474-24	50 pair #18, shielded pairs, overall shield 600 V, XLPE insul., PVC jacket
(E) 6722	E-23 (Note 2)	103	RGS conduit	1201.71	4404.97	1201.71	1473-24	50 pair #18, shielded pairs, overall shield 600 V, XLPE insul., PVC jacket
(E) 6723	E-23 (Note 1)	103	RGS conduit					
(E) 6724	E-23 (Note 1)	103	RGS conduit					
(E) 6725	E-23 (Note 1)	103	RGS conduit					
(E) 6936	E-23 (Note 1)	103	RGS conduit					
(E) 6937	E-23 (Note 1)	103	RGS conduit					

CONDUIT DATA

Conduit No	Reference	Size	Type	Total Fill (mm²)	Allowable Fill (mm²)	Cable Area (mm²)	Included Cable No.	Conductor Type
(E) 6944	E-23 (Note 1)	103	RGS conduit					
(E) 6945	E-23 (Note 1)	103	RGS conduit					
(E) 6946	E-23 (Note 1)	103	RGS conduit					
(E) 6947	E-23 (Note 1)	103	RGS conduit					
(E) 6948	E-23 (Note 1)	103	RGS conduit					
(E) 6952	E-23 (Note 1)	103	Liquidtight flex metal					
(E) 6964	E-23 (Note 2)	103	RGS conduit	1201.71	4404.97	1201.71	1474-24	50 pair #18, shielded pairs, overall shield 600 V, XLPE insul., PVC jacket
(E) 6965	E-23 (Note 2)	103	RGS conduit	1201.71	4404.97	1201.71	1473-24	50 pair #18, shielded pairs, overall shield 600 V, XLPE insul., PVC jacket
(E) 6966	E-23 (Note 1)	103	RGS conduit					
(E) 6967	E-23 (Note 1)	103	RGS conduit					
(E) 6968	E-23 (Note 1)	103	RGS conduit					
(E) 6969	E-23 (Note 1)	103	RGS conduit					
(E) 6970	E-23 (Note 1)	103	RGS conduit					
(E) 6971	E-23 (Note 1)	103	RGS conduit					
(E) 6972	E-23 (Note 1)	103	RGS conduit					
(E) 6973	E-23 (Note 1)	103	RGS conduit					
(E) 6974	E-23 (Note 1)	103	Liquidtight flex metal					
(E) 6975	E-23 (Note 1)	103	RGS conduit					

NOTES:

1. Existing conduit and cable tray shown for reference only.
2. Existing conduit and cable tray for cable routing to Skyway Structures.
3. See Sheet E-228A. 1

REGISTERED PROFESSIONAL ENGINEER DAVID H. OTO No. 10699 Exp. 06/30/2011 ELECTRICAL STATE OF CALIFORNIA

MARK	DATE	DESCRIPTIONS	REV	CK	CCO NO.
2	2/24/10	Revised cables routed inside cable tray (E) 1T43, conduit (E) 4980.	JH	EJL	Final Routing & Misc
1	4/30/08	Revised cable number routed inside wireway 22W and 23W. Add note 3.	ECR	EJL	

REVISIONS

REGISTERED PROFESSIONAL ENGINEER FADI WALIEDDINE No. 11465 Exp. 12/31/2009 ELECTRICAL STATE OF CALIFORNIA

CONTRACT CHANGE ORDER NO. 146
SHEET 34 OF 50

DETAILS
CONDUIT AND TRAY SCHEDULE

E-228

STATE OF CALIFORNIA - DEPARTMENT OF TRANSPORTATION
Caltrans

DESIGN OVERSIGHT
BEHZAD GOLEMOHAMMADI

DATE	FK	CALCULATED/ DESIGNED BY	REVISED BY	DATE REVISED
2/06	AB	CHECKED BY		

LAST REVISION 00-00-00

DATE PLOTTED => 2/23/2010
TIME PLOTTED => 1:43:02 PM

FOR REDUCED PLANS ORIGINAL SCALE IS IN MILLIMETERS 0 20 40 60 80

DGN FILE =>t:\13103\ms\pse\OTD-Contract 1\CCO\Electrical\CCO-Final Routing\2010-02-24 Submittal\40120lua228r2.dgn
USERNAME =>llorico

CU 04251 | EA 0120L1

DIST	COUNTY	ROUTE	KILOMETER POST TOTAL PROJECT	SHEET No.	TOTAL SHEETS
04	Ala	80	1.6/2.7	581A R5	643

REGISTERED ELECTRICAL ENGINEER 4/30/08 DATE

PLANS APPROVAL DATE

REGISTERED PROFESSIONAL ENGINEER FADI WALIEDDINE No. 11465 Exp. 12/31/2009 ELECTRICAL STATE OF CALIFORNIA

PB POWER, Inc.
A Parsons Brinckerhoff Company
303 Second St., Suite 700N
San Francisco, CA 94107-1317

The State of California or its officers or agents shall not be responsible for the accuracy or completeness of electronic copies of this plan sheet.

To get to the Caltrans web site, go to http://www.dot.ca.gov

Caltrans Metric

CONDUIT DATA

ROADWAY AND GIRDER LEVEL WESTBOUND

Conduit No	Reference	Size	Type	Total Fill (mm²)	Allowable Fill (mm²)	Cable Area (mm²)	Included Cable No.	Conductor Type
4355A	E-20	103	RGS-PVC coated	0.00	3324.51	0.00	Pull Rope 1	Soft Fiber Polyester
4356A	E-20	103	RGS-PVC coated	0.00	3324.51	0.00	Pull Rope 1	Soft Fiber Polyester
4815	E-20	103	RGS-PVC coated	0.00	3324.51	0.00	Pull Rope 1	Soft Fiber Polyester
4820	E-20	78	RGS-PVC coated	990.41	1499.81	0.00	Pull Rope 1	Soft Fiber Polyester
						366.1	1626-1	1-3/C + gnd #4, 600 V, EPR insulation
						624.31	1626-2	1-4/C + gnd #2, 600 V, EPR insulation
4821	E-20	78	RGS-PVC coated	732.20	1499.81	0.00	Pull Rope 1	Soft Fiber Polyester
						366.1	1626	1-3/C + gnd #4, 600 V, EPR insulation
						366.1	1626-1	1-3/C + gnd #4, 600 V, EPR insulation
4826	E-21	78	RGS-PVC coated	990.41	1499.81	0.00	Pull Rope 1	Soft Fiber Polyester
						366.1	1627-1	1-3/C + gnd #4, 600 V, EPR insulation
						624.31	1627-2	1-4/C + gnd #2, 600 V, EPR insulation
4827	E-21	78	RGS-PVC coated	732.32	1499.81	0.00	Pull Rope 1	Soft Fiber Polyester
						366.1	1627	1-3/C + gnd #4, 600 V, EPR insulation
						366.1	1627-1	1-3/C + gnd #4, 600 V, EPR insulation
4846	E-20	103	RGS-PVC coated	0.00	3324.51	0.00	Pull Rope 1	Soft Fiber Polyester
Wireway 22W	E-20	203	203 mm x 203 mm wireway	1573.50 △4	8258.05	366.10	1626	1-3/C + gnd #4, 600 V, EPR insulation
						366.10	1626-1	1-3/C + gnd #4, 600 V, EPR insulation
						624.31	1626-2	1-4/C + gnd #2, 600 V, EPR insulation
					△4	69.36	1656-1	1-4/C #16, 600 V, EPR insulation △4
						49.21	UP171-10	3-1/C #12, 600 V, RHH/RHW insulation
						49.21	UP171-2A	2 + 1 gnd #12, #12, 600V, RHH/RHW insulation
						49.21	UP171-5	3-1/C #12, 600 V, RHH/RHW insulation
Wireway 23W	E-21	203	203 mm x 203 mm wireway	1573.50 △4	8258.05	366.10	1627	1-3/C + gnd #4, 600 V, EPR insulation
						366.10	1627-1	1-3/C + gnd #4, 600 V, EPR insulation
						624.31	1627-2	1-4/C + gnd #2, 600 V, EPR insulation
					△4	69.36	1656-2	1-4/C #16, 600 V, EPR insulation △4
						49.21	UP172-10	3-1/C #12, 600 V, RHH/RHW insulation △5
						49.21	UP172-2A	2 + 1 gnd #12, 600 V, RHH/RHW insulation
						49.21	UP172-5	3-1/C #12, 600 V, RHH/RHW insulation
1401A	E-10, E-11	41	RGS conduit	133.19	534.55	0.00	Pull Rope 1	Soft Fiber Polyester
						133.19	A-1006-1	3 + 1 gnd #8, #10, 600 V, RHH/RHW insulation △1
1401B	E-10, E-11	41	RGS conduit	133.19	534.55	0.00	Pull Rope 1	Soft Fiber Polyester
						133.19	A-1006-1	3 + 1 gnd #8, #10, 600 V, RHH/RHW insulation
1402A	E-11	41	RGS conduit	133.19	534.55	0.00	Pull Rope 1	Soft Fiber Polyester
						133.19	A-1007-1	3 + 1 gnd #8, #10, 600 V, RHH/RHW insulation
1411A	E-12	41	RGS conduit	212.85	534.55	0.00	Pull Rope 1	Soft Fiber Polyester
						212.85	A-1008-1	3 + 1 gnd #6, #8, 600 V, RHH/RHW insulation
1411B	E-12	41	RGS conduit	212.85	534.55	0.00	Pull Rope 1	Soft Fiber Polyester
						212.85	A-1008-1	3 + 1 gnd #6, #8, 600 V, RHH/RHW insulation
4403A	E-25	41	RGS conduit	0.00	534.55	0.00	Pull Rope 1	Soft Fiber Polyester △2
4404A	E-25	41	RGS conduit	0.00	534.55	0.00	Pull Rope 1	Soft Fiber Polyester
4450A	E-28, E-30	103	RGS conduit	664.12 △4	3324.51	69.36	1656-1	1-4/C #16, 600 V, EPR insulation
						69.36	1656-2	1-4/C #16, 600 V, EPR insulation △4 △3
						262.70	A-1007	1-3/C + gnd #8, 600 V, EPR insulation
					△4	262.70	A-1006	1-3/C + gnd #8, 600 V, EPR insulation
						0.00	Pull Rope 1	Soft Fiber Polyester

CONDUIT DATA

ROADWAY AND GIRDER LEVEL WESTBOUND

Conduit No	Reference	Size	Type	Total Fill (mm²)	Allowable Fill (mm²)	Cable Area (mm²)	Included Cable No.	Conductor Type
△3 4451A	E-28, E-30	103	RGS conduit	972.87	3324.51	0.00	Pull Rope 1	Soft Fiber Polyester
						324.29	S-1602	1-3/C #6, 600 V, EPR insulation
						324.29	S-1601	1-3/C #6, 600 V, EPR insulation
						324.29	A-1005	1-3/C #6, 600 V, EPR insulation
4452A	E-28, E-30	103	RGS conduit	732.20	2576.49	366.10	1626	1-3/C + gnd #4, 600 V, EPR insulation
						0.00	Pull Rope 1	Soft Fiber Polyester
						366.10	1627	1-3/C + gnd #4, 600 V, EPR insulation
4318	E-28, E-30	103	RGS conduit	0.00	3324.51	0.00	Pull Rope 1	Soft Fiber Polyester
4319	E-28, E-30	103	RGS conduit	0.00	3324.51	0.00	Pull Rope 1	Soft Fiber Polyester

△4 △5 REGISTERED PROFESSIONAL ENGINEER DAVID H. OTO No. 10699 Exp. 06/30/2011 ELECTRICAL STATE OF CALIFORNIA

MARK	DATE	DESCRIPTIONS	REV	CK	CCO NO.
△5	02/24/10	Changed the conductor type of cable UP172-10.	JH	EJL	Final Routing & Misc
△4	01/29/10	Revised cable from 1-3/C #16 to 1/4C #16. Added conduit 4411, 4450, 4814, 4844, and cable tray 1740.	JH	EJL	Conductor Change/ Misc.
△3	01/15/09	Added conduits 4450A, 4451A, 4452A 4318, 4319.	EJL	DO	80
△2	08/29/08	Added conduits 4403A and 4404A	JH	EJL	Light Pole Base
△1	08/29/08	Added conduits 1401A,1401B,1402A, 1411A, 1411B. Added cable/ ckts. A-1006-1, A-1007-1, A-1008-1	JH	EJL	Light Pipe
△0	04/30/08	New drawing. Added conduit nos. 4820, 4821, 4826, 4827, 4815, 4355A, 4846, 4356A. Added cables inside wireway 22W and 23W	ECR	EJL	65

REVISIONS

CONTRACT CHANGE ORDER NO. 146
SHEET 35 OF 50

DETAILS
CONDUIT AND TRAY SCHEDULE

△0 **E-228A**

DESIGN OVERSIGHT	CALCULATED/ DESIGNED BY	CHECKED BY	ECR	DATE 4/08	REVISED BY	DATE REVISED
BEHZAD GOLEMOHAMMADI			EJL	5/08		

STATE OF CALIFORNIA - DEPARTMENT OF TRANSPORTATION
Caltrans

LAST REVISION 00-00-00 | DATE PLOTTED => 2/23/2010 TIME PLOTTED => 1:42:09 PM

FOR REDUCED PLANS ORIGINAL SCALE IS IN MILLIMETERS 0 20 40 60 80

DGN FILE =>t:\13103\ms\pse\OTD-Contract 1\CCO\Electrical\CCO-Final Routing\2010-02-24 Submittal\40120lua228Ar5.dgn
USERNAME =>llorico

CU 04251 | EA 0120L1

DIST	COUNTY	ROUTE	KILOMETER POST TOTAL PROJECT	SHEET No	TOTAL SHEETS
04	Ala	80	1.6/2.7	583 R3	643

REGISTERED ELECTRICAL ENGINEER 05/15/06 DATE

1-29-07
PLANS APPROVAL DATE

REGISTERED PROFESSIONAL ENGINEER JENS ERLINGSSON No. 8249 Exp. 9/30/08 ELECTRICAL STATE OF CALIFORNIA

PB POWER, Inc.
A Parsons Brinckerhoff Company
303 Second St., Suite 700N
San Francisco, CA 94107-1317

The State of California or its officers or agents shall not be responsible for the accuracy or completeness of electronic copies of this plan sheet.

To get to the Caltrans web site, go to http://www.dot.ca.gov

Caltrans Metric

MARK	DATE	DESCRIPTIONS	REV	CK	CCO NO.
3	2/24/10	Updated size of conduit 5371.	JH	EJL	Final Routing & Misc
2	3/13/09	Deleted ckt 2626-2, 2621-2 routed inside conduits 5803 and 5804.	RSB	EJL	65 REV
1	4/30/08	Revised cable number routed inside conduit #5803 and 5804. Added note 1.	ECR	EJL	65

REVISIONS

CONTRACT CHANGE ORDER NO. 146
SHEET 36 OF 50

CONDUIT DATA

ROADWAY AND GIRDER LEVEL EASTBOUND

Conduit No	Reference	Size	Type	Total Fill (mm²)	Allowable Fill (mm²)	Cable Area (mm²)	Included Cable No.	Conductor Type
5345	E-61, E-62	103	RGS conduit	0.00	3324.51	0.00	Pull Rope 1	Soft-Fiber Polyester
5350	E-60, E-61	103	RGS conduit	0.00	3324.51	0.00	Pull Rope 1	Soft-Fiber Polyester
5351	E-61, E-62	103	RGS conduit	0.00	3324.51	0.00	Pull Rope 1	Soft-Fiber Polyester
5360	E-60, E-61	103	RGS conduit	0.00	3324.51	0.00	Pull Rope 1	Soft-Fiber Polyester
5361	E-61, E-62	103	RGS conduit	0.00	3324.51	0.00	Pull Rope 1	Soft-Fiber Polyester
5368	E-53, E-61	103	RGS-PVC coated conduit	0.00	3324.51	0.00	Pull Rope 1	Soft-Fiber Polyester
5369	E-53, E-61	103	RGS-PVC coated conduit	0.00	3324.51	0.00	Pull Rope 1	Soft-Fiber Polyester
5370	E-60, E-61	103	RGS conduit	0.00	3324.51	0.00	Pull Rope 1	Soft-Fiber Polyester
5371	E-61, E-62	3 103	RGS conduit	0.00	879.42	0.00	Pull Rope 1	Soft-Fiber Polyester
5375	E-53, E-61	103	RGS-PVC coated conduit	0.00	3324.51	0.00	Pull Rope 1	Soft-Fiber Polyester
5378	E-53, E-61	78	RGS-PVC coated conduit	0.00	1935.24	0.00	Pull Rope 1	Soft-Fiber Polyester
5379	E-53, E-61	78	RGS-PVC coated conduit	0.00	1935.24	0.00	Pull Rope 1	Soft-Fiber Polyester
5380	E-61	78	RGS conduit	0.00	1935.24	0.00	Pull Rope 1	Soft-Fiber Polyester
5382	E-61	78	RGS conduit	0.00	1935.24	0.00	Pull Rope 1	Soft-Fiber Polyester
5383	E-61	78	RGS conduit	0.00	1935.24	0.00	Pull Rope 1	Soft-Fiber Polyester
5386	E-60, E-61	78	RGS conduit	0.00	1935.24	0.00	Pull Rope 1	Soft-Fiber Polyester
5388	E-61, E-62	103	RGS conduit	0.00	3324.51	0.00	Pull Rope 1	Soft-Fiber Polyester
5390	E-52, E-62	41	RGS conduit	0.00	534.55	0.00	Pull Rope 1	Soft-Fiber Polyester
5391	E-52, E-62	41	RGS conduit	0.00	534.55	0.00	Pull Rope 1	Soft-Fiber Polyester
5392	E-52, E-62	41	RGS conduit	0.00	534.55	0.00	Pull Rope 1	Soft-Fiber Polyester
5393	E-61	78	RGS conduit	0.00	1935.24	0.00	Pull Rope 1	Soft-Fiber Polyester
5394	E-61	78	RGS conduit	0.00	1935.24	0.00	Pull Rope 1	Soft-Fiber Polyester
5396	E-61	78	RGS conduit	0.00	1935.24	0.00	Pull Rope 1	Soft-Fiber Polyester
5401	E-61	41	RGS conduit	0.00	534.55	0.00	Pull Rope 1	Soft-Fiber Polyester
5402	E-61	41	RGS conduit	0.00	534.55	0.00	Pull Rope 1	Soft-Fiber Polyester
5405	E-51, E-61	41	RGS conduit	0.00	534.55	0.00	Pull Rope 1	Soft-Fiber Polyester
5406	E-51, E-61	41	RGS conduit	0.00	534.55	0.00	Pull Rope 1	Soft-Fiber Polyester
5407	E-61, E-62	103	RGS conduit	0.00	3324.51	0.00	Pull Rope 1	Soft-Fiber Polyester
5411	E-62, E-52	41	RGS conduit	0.00	534.55	0.00	Pull Rope 1	Soft-Fiber Polyester
5412	E-62, E-52	41	RGS conduit	0.00	534.55	0.00	Pull Rope 1	Soft-Fiber Polyester
5413	E-62, E-52	41	RGS conduit	0.00	534.55	0.00	Pull Rope 1	Soft-Fiber Polyester
5416	E-61, E-62	103	RGS conduit	0.00	3324.51	0.00	Pull Rope 1	Soft-Fiber Polyester
5417	E-61, E-62	103	RGS conduit	0.00	3324.51	0.00	Pull Rope 1	Soft-Fiber Polyester
5430	E-61, E-51, E-53	41	RGS-PVC coated conduit	0.00	534.55	0.00	Pull Rope 1	Soft-Fiber Polyester
5431	E-61, E-51, E-53	41	RGS-PVC coated conduit	0.00	534.55	0.00	Pull Rope 1	Soft-Fiber Polyester
5801	E-53	78	RGS-PVC coated conduit	0.00	1935.24	0.00	Pull Rope 1	Soft-Fiber Polyester
5802	E-53	78	RGS-PVC coated conduit	2 0.00	1935.24		Pull Rope 1	Soft-Fiber Polyester
5803	E-53	78	RGS-PVC coated conduit	0.00	1935.24	0.00	Pull Rope 1	Soft-Fiber Polyester
						~~624.31~~	~~2626-2~~	~~1-4/C + Gnd#2, 600V EPR Insulation~~ 1
5804	E-53	78	RGS-PVC coated conduit 1	0.00	1935.24	0.00	Pull Rope 1	Soft-Fiber Polyester
						~~624.31~~	~~2621-2~~	~~1-4/C + Gnd#2, 600V EPR Insulation~~ 2
5805	E-53	78	RGS-PVC coated conduit	0.00	1935.24	0.00	Pull Rope 1	Soft-Fiber Polyester
5806	E-53	78	RGS-PVC coated conduit	0.00	1935.24	0.00	Pull Rope 1	Soft-Fiber Polyester
5807	E-53	78	RGS-PVC coated conduit	0.00	1935.24	0.00	Pull Rope 1	Soft-Fiber Polyester
5808	E-53	53	RGS-PVC coated conduit	0.00	879.42	0.00	Pull Rope 1	Soft-Fiber Polyester
5809	E-53, E-54	78	RGS-PVC coated conduit	0.00	1935.24	0.00	Pull Rope 1	Soft-Fiber Polyester

CONDUIT DATA

ROADWAY AND GIRDER LEVEL EASTBOUND

Conduit No	Reference	Size	Type	Total Fill (mm²)	Allowable Fill (mm²)	Cable Area (mm²)	Included Cable No.	Conductor Type
5810	E-53	78	RGS-PVC coated conduit	.00	1935.24	0.00	Pull Rope 1	Soft-Fiber Polyester
5811	E-53, E-61	78	RGS-PVC coated conduit	0.00	1935.24	0.00	Pull Rope 1	Soft-Fiber Polyester
5812	E-53, E-61	78	RGS-PVC coated conduit	0.00	1935.24	0.00	Pull Rope 1	Soft-Fiber Polyester
5813	E-53, E-61	78	RGS-PVC coated conduit	0.00	1935.24	0.00	Pull Rope 1	Soft-Fiber Polyester
5814	E-53, E-61	78	RGS-PVC coated conduit	0.00	1935.24	0.00	Pull Rope 1	Soft-Fiber Polyester
5845	E-53, E-61	78	RGS-PVC coated conduit	0.00	1935.24	0.00	Pull Rope 1	Soft-Fiber Polyester
5940	E-60	103	RGS conduit	0.00	3324.51	0.00	Pull Rope 1	Soft-Fiber Polyester
5941	E-60	103	RGS conduit	0.00	3324.51	0.00	Pull Rope 1	Soft-Fiber Polyester
5942	E-60	103	RGS conduit	0.00	3324.51	0.00	Pull Rope 1	Soft-Fiber Polyester
5943	E-60	103	RGS conduit	0.00	3324.51	0.00	Pull Rope 1	Soft-Fiber Polyester
5944	E-60	103	RGS conduit	0.00	3324.51	0.00	Pull Rope 1	Soft-Fiber Polyester
5950	E-60	103	RGS conduit	0.00	3324.51	0.00	Pull Rope 1	Soft-Fiber Polyester
5951	E-60	103	RGS conduit	0.00	3324.51	0.00	Pull Rope 1	Soft-Fiber Polyester
5952	E-60	103	RGS conduit	0.00	3324.51	0.00	Pull Rope 1	Soft-Fiber Polyester
5953	E-60	103	RGS conduit	0.00	3324.51	0.00	Pull Rope 1	Soft-Fiber Polyester
5954	E-60	103	RGS conduit	0.00	3324.51	0.00	Pull Rope 1	Soft-Fiber Polyester
7675	E-59	103	RGS conduit	0.00	3324.51	0.00	Pull Rope 1	Soft-Fiber Polyester
7676	E-59	103	RGS conduit	0.00	3324.51	0.00	Pull Rope 1	Soft-Fiber Polyester
7678	E-59	103	RGS conduit	0.00	3324.51	0.00	Pull Rope 1	Soft-Fiber Polyester
7679	E-59	103	RGS conduit	0.00	3324.51	0.00	Pull Rope 1	Soft-Fiber Polyester
7680	E-59	103	RGS conduit	0.00	3324.51	0.00	Pull Rope 1	Soft-Fiber Polyester
7685	E-59	103	RGS conduit	0.00	3324.51	0.00	Pull Rope 1	Soft-Fiber Polyester
7690	E-59	103	RGS conduit	0.00	3324.51	0.00	Pull Rope 1	Soft-Fiber Polyester
7691	E-59	103	RGS conduit	0.00	3324.51	0.00	Pull Rope 1	Soft-Fiber Polyester
7692	E-59	103	RGS conduit	0.00	3324.51	0.00	Pull Rope 1	Soft-Fiber Polyester
Wireway 22E	E-53 (Note 1)	~~203~~	~~203 mm x 203 mm wireway~~	~~0.00~~	~~8258.05~~	~~0.00~~		1

For continuation, see next sheet.

3 REGISTERED PROFESSIONAL ENGINEER DAVID H. OTO No. 10698 Exp. 06/30/2011 ELECTRICAL STATE OF CALIFORNIA

REGISTERED PROFESSIONAL ENGINEER FADI WALIEDDINE No. 11465 Exp. 12/31/2009 ELECTRICAL STATE OF CALIFORNIA 1 2

NOTE:

1. See Sheet E-230A. 1

DETAILS
CONDUIT AND TRAY SCHEDULE

E-230

STATE OF CALIFORNIA - DEPARTMENT OF TRANSPORTATION
Caltrans

DESIGN OVERSIGHT
BEHZAD GOLEMOHAMMADI

CALCULATED/DESIGNED BY FK
CHECKED BY AB
DATE 2/06
REVISED BY
DATE REVISED

LAST REVISION 00-00-00
DATE PLOTTED => 2/23/2010
TIME PLOTTED => 1:43:26 PM

FOR REDUCED PLANS ORIGINAL SCALE IS IN MILLIMETERS 0 20 40 60 80

DGN FILE =>t:\13103\ms\pse\OTD-Contract 1\CCO\Electrical\CCO-Final Routing\2010-02-24 Submittal\401201ua230r3.dgn
USERNAME =>llorico

CU 04251 | EA 0120L1

DIST	COUNTY	ROUTE	KILOMETER POST TOTAL PROJECT	SHEET No.	TOTAL SHEETS
04	Ala	80	1.6/2.7	584 R1	643

REGISTERED ELECTRICAL ENGINEER 05/15/06 DATE

1-29-07
PLANS APPROVAL DATE

REGISTERED PROFESSIONAL ENGINEER JENS ERLINGSSON No. 8249 Exp. 9/30/08 ELECTRICAL STATE OF CALIFORNIA

PB POWER, Inc.
A Parsons Brinckerhoff Company
303 Second St., Suite 700N
San Francisco, CA 94107-1317

The State of California or its officers or agents shall not be responsible for the accuracy or completeness of electronic copies of this plan sheet.

To get to the Caltrans web site, go to http://www.dot.ca.gov

Caltrans Metric

CONDUIT DATA

ROADWAY AND GIRDER LEVEL EASTBOUND

Conduit No	Reference	Size	Type	Total Fill (mm²)	Allowable Fill (mm²)	Cable Area (mm²)	Included Cable No.	Conductor Type
2T43	E-59	305	152 mm siderail tray	0.00	8387.08	0.00	-	
2T53	E-59	610	152 mm siderail tray	0.00	16774.16	0.00	-	
(E) 2T13	E-59 (Note 1)	150	152 mm siderail ladder					
(E) 2T24	E-59 (Note 1)	610	152 mm siderail ladder					
(E) 2T43	E-59 (Note 1)	305	152 mm siderail tray					
(E) 2T53	E-59 (Note 1)	610	152 mm siderail tray					
(E) 7675	E-59 (Note 1)	103	RGS conduit					
(E) 7676	E-59 (Note 1)	103	RGS conduit					
(E) 7678	E-59 (Note 1)	103	RGS conduit					
(E) 7679	E-59 (Note 1)	103	RGS conduit					
(E) 7680	E-59 (Note 1)	103	RGS conduit					
(E) 7681	E-59 (Note 1)	103	RGS conduit					
(E) 7682	E-59 (Note 1)	103	RGS conduit					
(E) 7683	E-59 (Note 1)	103	Liquidtight flex metal					
(E) 7685	E-59 (Note 1)	103	RGS conduit					
(E) 7686	E-59 (Note 1)	103	RGS conduit					
(E) 7687	E-59 (Note 1)	103	RGS conduit					
(E) 7688	E-59 (Note 1)	103	RGS conduit					
(E) 7689	E-59 (Note 1)	103	RGS conduit					
(E) 7690	E-59 (Note 1)	103	RGS conduit					
(E) 7691	E-59 (Note 1)	103	RGS conduit					
(E) 7692	E-59 (Note 1)	103	RGS conduit					
(E) 7693	E-59 (Note 1)	103	RGS conduit					
(E) 7694	E-59 (Note 1)	103	RGS conduit					
(E) 7697	E-59 (Note 1)	103	Liquidtight flex metal					
(E) 7698	E-59 (Note 1)	103	RGS conduit					
(E) 7699	E-59 (Note 1)	103	Liquidtight flex metal					
(E) 7700	E-59 (Note 1)	103	RGS conduit					
(E) 7935	E-59 (Note 1)	103	Liquidtight flex metal					
(E) 7936	E-59 (Note 1)	103	Liquidtight flex metal					
(E) 7937	E-59 (Note 1)	103	Liquidtight flex metal					
(E) 7938	E-59 (Note 1)	103	Liquidtight flex metal					
(E) 7939	E-59 (Note 1)	103	RGS conduit					
(E) 7940	E-59 (Note 1)	103	RGS conduit					
(E) 7941	E-59 (Note 1)	103	RGS conduit					
(E) 7942	E-59 (Note 1)	103	RGS conduit					
(E) 7946	E-59 (Note 1)	103	Liquidtight flex metal					
(E) 7947	E-59 (Note 1)	103	Liquidtight flex metal					
(E) 7948	E-59 (Note 1)	103	Liquidtight flex metal					
(E) 7949	E-59 (Note 1)	103	Liquidtight flex metal					

CONDUIT DATA

Conduit No	Reference	Size	Type	Total Fill (mm²)	Allowable Fill (mm²)	Cable Area (mm²)	Included Cable No.	Conductor Type
(E) 7950	E-59 (Note 1)	103	RGS conduit					
(E) 7951	E-59 (Note 1)	103	RGS conduit					
(E) 7952	E-59 (Note 1)	103	RGS conduit					
(E) 7953	E-59 (Note 1)	103	RGS conduit					
(E) 7957	E-59 (Note 1)	103	Liquidtight flex metal					
(E) 7958	E-59 (Note 1)	103	RGS conduit					
2702A	E-49	41	RGS conduit	0.00	534.55	0.00	Pull Rope 1	Soft-Fiber Polyester
2702B	E-49	41	RGS conduit	0.00	534.55	0.00	Pull Rope 1	Soft-Fiber Polyester
2706A	E-50	41	RGS conduit	0.00	534.55	0.00	Pull Rope 1	Soft-Fiber Polyester
2723A	E-50	41	RGS conduit	0.00	534.55	0.00	Pull Rope 1	Soft-Fiber Polyester
2802A	E-49	41	RGS conduit	0.00	534.55	0.00	Pull Rope 1	Soft-Fiber Polyester
2802B	E-49	41	RGS conduit	0.00	534.55	0.00	Pull Rope 1	Soft-Fiber Polyester
2806A	E-50	41	RGS conduit	0.00	534.55	0.00	Pull Rope 1	Soft-Fiber Polyester
2823A	E-50	41	RGS conduit	0.00	534.55	0.00	Pull Rope 1	Soft-Fiber Polyester
7693	E-59	103	RGS conduit	0.00	3324.51	0.00	Pull Rope 1	Soft-Fiber Polyester
7694	E-59	103	RGS conduit	0.00	3324.51	0.00	Pull Rope 1	Soft-Fiber Polyester

MARK	DATE	DESCRIPTIONS	REV	CK	CCO NO.
1	2/24/10	Added conduits 2702A, 2702B, 2706A, 2723A, 2802A, 2802B, 2806A, 2823A, 7693, and 7694.	JH	EJL	Light Pipe

REVISIONS

CONTRACT CHANGE ORDER NO. 146
SHEET 37 OF 50

REGISTERED PROFESSIONAL ENGINEER DAVID H. OTO No. 10699 Exp. 06/30/2011 ELECTRICAL STATE OF CALIFORNIA

NOTES:

1. Existing conduit and cable tray shown for reference only.

DETAILS
CONDUIT AND TRAY SCHEDULE

E-231

REVISED BY	DATE	CALCULATED/DESIGNED BY	FK	DATE	DESIGN OVERSIGHT
DATE REVISED		CHECKED BY	AB	2/06	BEHZAD GOLEMOHAMMADI

STATE OF CALIFORNIA - DEPARTMENT OF TRANSPORTATION
Caltrans

LAST REVISION 00-00-00
DATE PLOTTED => 2/22/2010
TIME PLOTTED => 4:18:19 PM

FOR REDUCED PLANS ORIGINAL SCALE IS IN MILLIMETERS 0 20 40 60 80

DGN FILE =>T:\13103\MS\pse\OTO-Contract 1\CCO\Electrical\CCO-Light Pipe\20100224 SUBMITTAL\40120lua231R1.dgn
USERNAME =>llorico

CU 04251 | EA 0120L1

DIST	COUNTY	ROUTE	KILOMETER POST TOTAL PROJECT	SHEET No	TOTAL SHEETS
04	Ala	80	1.6/2.7	585 R1	643

REGISTERED ELECTRICAL ENGINEER — DATE 05/15/06

1-29-07
PLANS APPROVAL DATE

REGISTERED PROFESSIONAL ENGINEER JENS ERLINGSSON No. 8249 Exp. 9/30/08 ELECTRICAL STATE OF CALIFORNIA

PB POWER, Inc.
A Parsons Brinckerhoff Company
303 Second St., Suite 700N
San Francisco, CA 94107-1317

The State of California or its officers or agents shall not be responsible for the accuracy or completeness of electronic copies of this plan sheet.

To get to the Caltrans web site, go to http://www.dot.ca.gov

REGISTERED PROFESSIONAL ENGINEER DAVID H. OTO No. 10699 Exp. 06/30/2011 ELECTRICAL STATE OF CALIFORNIA

Caltrans Metric

CONDUIT DATA

UNDERGROUND AND ROADWAY AT-GRADE

Conduit No	Reference	Size	Type	Total Fill (mm²)	Allowable Fill (mm²)	Cable Area (mm²)	Included Cable No.	Conductor Type
0211	E-101, E-102, E-111, E-113,	103	RGS conduit	2628.48	3324.51	0.00	Pull Rope 1	Soft-Fiber Polyester
						2628.48	1003-1	3-1/C #4/0, 15 kV, EPR Insulation
0212	E-101, E-102, E-111, E-113,	103	RGS conduit	0.00	3324.51	0.00	Pull Rope 1	Soft-Fiber Polyester
0213	E-101, E-102, E-111 E-113,	103	RGS conduit	0.00	3324.51	0.00	Pull Rope 1	Soft-Fiber Polyester
0214	E-101, E-102, E-111, E-113	103	RGS conduit	0.00	3324.51	0.00	Pull Rope 1	Soft-Fiber Polyester
0215	E-101, E-102, E-111, E-113,	103	RGS conduit	0.00	3324.51	0.00	Pull Rope 1	Soft-Fiber Polyester
0220	E-102, E-109, E-113, E-115	103	RGS conduit	0.00	3324.51	0.00	Pull Rope 1	Soft-Fiber Polyester
0221	E-102, E-109, E-113, E-115	103	RGS conduit	0.00	3324.51	0.00	Pull Rope 1	Soft-Fiber Polyester
0222	E-102, E-109, E-113, E-115	103	RGS conduit	0.00	3324.51	0.00	Pull Rope 1	Soft-Fiber Polyester
0223	E-102, E-109, E-113, E-115	103	RGS conduit	0.00	3324.51	0.00	Pull Rope 1	Soft-Fiber Polyester
0224	E-102, E-109, E-113, E-115	103	RGS conduit	0.00	3324.51	0.00	Pull Rope 1	Soft-Fiber Polyester
0225	E-102, E-109, E-113, E-115	103	RGS conduit	0.00	3324.51	0.00	Pull Rope 1	Soft-Fiber Polyester
0226	E-102, E-109, E-113, E-115	103	RGS conduit	0.00	3324.51	0.00	Pull Rope 1	Soft-Fiber Polyester
0227	E-102, E-109, E-113, E-115	103	RGS conduit	0.00	3324.51	0.00	Pull Rope 1	Soft-Fiber Polyester
0230	E-99, E-103, E-115	103	RGS conduit	0.00	3324.51	0.00	Pull Rope 1	Soft-Fiber Polyester
0231	E-99, E-103, E-115	103	RGS conduit	0.00	3324.51	0.00	Pull Rope 1	Soft-Fiber Polyester
0232	E-99, E-103, E-115	103	RGS conduit	0.00	3324.51	0.00	Pull Rope 1	Soft-Fiber Polyester
0233	E-99, E-103, E-115	103	RGS conduit	0.00	3324.51	0.00	Pull Rope 1	Soft-Fiber Polyester
0235	E-98, E-103, E-115	103	RGS conduit	0.00	3324.51	0.00	Pull Rope 1	Soft-Fiber Polyester
0236	E-98, E-103, E-115	103	RGS conduit	0.00	3324.51	0.00	Pull Rope 1	Soft-Fiber Polyester
0237	E-98, E-103, E-115	103	RGS conduit	0.00	3324.51	0.00	Pull Rope 1	Soft-Fiber Polyester
0238	E-98, E-103, E-115	103	RGS conduit	0.00	3324.51	0.00	Pull Rope 1	Soft-Fiber Polyester
0250	E-102, E-107, E-113	103	RGS conduit	2628.48	3324.51	2628.48	1003-1	3-1/C #4/0, 15 kV, EPR Insulation
						0.00	Pull Rope 1	Soft-Fiber Polyester
0251	E-102, E-107, E-113	103	RGS conduit	0.00	3324.51	0.00	Pull Rope 1	Soft-Fiber Polyester
0252	E-107	103	RGS conduit	2628.48	3324.51	2628.48	1003-1	3-1/C #4/0, 15 kV, EPR Insulation
						0.00	Pull Rope 1	Soft-Fiber Polyester
0253	E-107	103	RGS conduit	0.00	3324.51		Pull Rope 1	Soft-Fiber Polyester
0254	E-107	103	RGS conduit	2628.48	3324.51	0.00	Pull Rope 1	Soft-Fiber Polyester
						2628.48	1003-1	3-1/C #4/0, 15 kV, EPR Insulation
0255	E-107	103	RGS conduit	0.00	3324.51	0.00	Pull Rope 1	Soft-Fiber Polyester
0256	E-107	103	RGS conduit	2628.48	3324.51	0.00	Pull Rope 1	Soft-Fiber Polyester
						2628.48	1003-1	3-1/C #4/0, 15 kV, EPR Insulation
0257	E-107	103	RGS conduit	0.00	3324.51	0.00	Pull Rope 1	Soft-Fiber Polyester
0258	E-107	103	RGS conduit	2628.48	3324.51	0.00	Pull Rope 1	Soft-Fiber Polyester
						2628.48	1003-1	3-1/C #4/0, 15 kV, EPR Insulation
0259	E-107	103	RGS conduit	0.00	3324.51	0.00	Pull Rope 1	Soft-Fiber Polyester
0260	E-107	103	RGS conduit	2628.48	3324.51	2628.48	1003-1	3-1/C #4/0, 15 kV, EPR Insulation
						0.00	Pull Rope 1	Soft-Fiber Polyester
0261	E-107	103	RGS conduit	0.00	3324.51	0.00	Pull Rope 1	Soft-Fiber Polyester
0210	E-101, E-111 E-113	103	RGS conduit	0.00	3324.51	0.00	Pull Rope 1	Soft-Fiber Polyester

CONDUIT DATA

UNDERGROUND AND ROADWAY AT-GRADE

Conduit No	Reference	Size	Type	Total Fill (mm²)	Allowable Fill (mm²)	Cable Area (mm²)	Included Cable No.	Conductor Type
0262	E-108	103	RGS conduit	2628.48	3324.51	0.00	Pull Rope 1	Soft-Fiber Polyester
						2628.48	1003-1	3-1/C #4/0, 15 kV, EPR Insulation
0263	E-108	103	RGS conduit	0.00	3324.51	0.00	Pull Rope 1	Soft-Fiber Polyester
0264	E-108	103	RGS conduit	2628.48	3324.51	2628.48	1003-1	3-1/C #4/0, 15 kV, EPR Insulation
						0.00	Pull Rope 1	Soft-Fiber Polyester
0265	E-108	103	RGS conduit	0.00	3324.51	0.00	Pull Rope 1	Soft-Fiber Polyester
0266	E-108	103	RGS conduit	2628.48	3324.51	2628.48	1003-1	3-1/C #4/0, 15 kV, EPR Insulation
						0.00	Pull Rope 1	Soft-Fiber Polyester
0267	E-108	103	RGS conduit	0.00	3324.51	0.00	Pull Rope 1	Soft-Fiber Polyester
0268	E-108	103	RGS conduit	2628.48	3324.51	0.00	Pull Rope 1	Soft-Fiber Polyester
						2628.48	1003-1	3-1/C #4/0, 15 kV, EPR Insulation
0269	E-108	103	RGS conduit	0.00	3324.51	0.00	Pull Rope 1	Soft-Fiber Polyester
0270	E-108	103	RGS conduit	2628.48	3324.51	0.00	Pull Rope 1	Soft-Fiber Polyester
						2628.48	1003-1	3-1/C #4/0, 15 kV, EPR Insulation
0271	E-108	103	RGS conduit	0.00	3324.51	0.00	Pull Rope 1	Soft-Fiber Polyester
0272	E-108, E-118	103	RGS conduit	2628.48	3324.51	0.00	Pull Rope 1	Soft-Fiber Polyester
						2628.48	1003-1	3-1/C #4/0, 15 kV, EPR Insulation
0273	E-108, E-118	103	RGS conduit	0.00	3324.51	0.00	Pull Rope 1	Soft-Fiber Polyester
0274	E-109, E-118	103	RGS conduit	2628.48	3324.51	0.00	Pull Rope 1	Soft-Fiber Polyester
						2628.48	1003-1	3-1/C #4/0, 15 kV, EPR Insulation
0275	E-109, E-118	103	RGS conduit	0.00	3324.51	0.00	Pull Rope 1	Soft-Fiber Polyester
0310	E-101, E-102, E-112, E-114	103	RGS conduit	0.00	3324.51	0.00	Pull Rope 1	Soft-Fiber Polyester
0311	E-101, E-102, E-112, E-114	103	RGS conduit	0.00	3324.51	0.00	Pull Rope 1	Soft-Fiber Polyester
0312	E-101, E-102, E-112, E-114	103	RGS conduit	0.00	3324.51	0.00	Pull Rope 1	Soft-Fiber Polyester
0313	E-101, E-102, E-112, E-114	103	RGS conduit	196.20	2576.49	0.00	Pull Rope 1	Soft-Fiber Polyester
						98.10	1804	1 - 2 pair, shielded #18 with IS/OA , 600 V, PVC
						98.10	1803	1 - 2 pair, shielded #18 with IS/OA , 600 V, PVC
0314	E-101, E-102, E-112, E-114	103	RGS conduit	0.00	3324.51	0.00	Pull Rope 1	Soft-Fiber Polyester
0315	E-101, E-102, E-112, E-114	103	RGS conduit	0.00	3324.51	0.00	Pull Rope 1	Soft-Fiber Polyester
0316	E-101, E-102, E-112, E-114	103	RGS conduit	0.00	3324.51	~~1201.71~~	~~2473 27~~	~~50 pair #18, shielded pairs, IS/OS shield 600 V, XLPE insulty PVC jacket~~
						~~1201.71~~	~~1473 26~~	~~50 pair #18, shielded pairs, IS/OS shield 600 V, XLPE insulty PVC jacket~~
						0.00	Pull Rope 1	Soft-Fiber Polyester

1

For continuation, see next sheet.

MARK	DATE	DESCRIPTIONS	REV	CK	CCO No.
1	1/29/10	Revised cable routed inside conduit 0316.	JH	EJL	Conductor Change/ Misc

REVISIONS

CONTRACT CHANGE ORDER NO. 146
SHEET 38 OF 50

DETAILS
CONDUIT AND TRAY SCHEDULE

E-232

STATE OF CALIFORNIA - DEPARTMENT OF TRANSPORTATION
Caltrans

DESIGN OVERSIGHT: BEHZAD GOLEMOHAMMADI

CALCULATED/ DESIGNED BY	FK	DATE 2/06	REVISED BY
CHECKED BY	AB	2/06	DATE REVISED

LAST REVISION 00-00-00

DATE PLOTTED => 2/2/2010
TIME PLOTTED => 1:48:27 PM

FOR REDUCED PLANS ORIGINAL SCALE IS IN MILLIMETERS 0 20 40 60 80

DGN FILE =>T:\13103\MS\pse\OTO-Contract 1\CCO\Electrical\CCO-Conductor change & misc\40120luc232r1.dgn
USERNAME =>llorico

CU 04251 | EA 0120L1

DIST	COUNTY	ROUTE	KILOMETER POST TOTAL PROJECT	SHEET No	TOTAL SHEETS
04	Ala	80	1.6/2.7	586 R2	643

REGISTERED ELECTRICAL ENGINEER 05/15/06 DATE

1-29-07
PLANS APPROVAL DATE

PB POWER, Inc.
A Parsons Brinckerhoff Company
303 Second St., Suite 700N
San Francisco, CA 94107-1317

The State of California or its officers or agents shall not be responsible for the accuracy or completeness of electronic copies of this plan sheet.

To get to the Caltrans web site, go to http://www.dot.ca.gov

Caltrans Metric

MARK	DATE	DESCRIPTIONS	REV	CK	CCO No.
2	1/29/10	Revised cable routed inside conduit 0317, 0318, 0321, 0330, 0331, 0335, 0336, 0339, 0340 and 0425.	JH	EJL	Conductor Change/ Misc
1	8/29/08	Added cable/ckts A-1006, A-1007, A-1008.	JH	EJL	Light Pipe

REVISIONS

CONTRACT CHANGE ORDER NO. 146
SHEET 39 OF 50

CONDUIT DATA

UNDERGROUND AND ROADWAY AT-GRADE

Conduit No	Reference	Size	Type	Total Fill (mm²)	Allowable Fill (mm²)	Cable Area (mm²)	Included Cable No.	Conductor Type
0317	E-101, E-102, E-112, E-114	103	RGS conduit	2403.42	2576.49	1201.71	1473-26	50 pair #18, shielded pairs, overall shield 600 V, XLPE insul., PVC jacket
				2		1201.71	1474-26	50 pair #18, shielded pairs, overall shield 600 V, XLPE insul., PVC jacket
						0.00	Pull Rope 1	Soft-Fiber Polyester
0318	E-101, E-102, E-112, E-114	103	RGS conduit	2403.42	2576.49	1201.71	2473-27	50 pair #18, shielded pairs, overall shield 600 V, XLPE insul., PVC jacket
				2		1201.71	2474-27	50 pair #18, shielded pairs, overall shield 600 V, XLPE insul., PVC jacket
						0.00	Pull Rope 1	Soft-Fiber Polyester
0320	E-102, E-109, E-114, E-116	103	RGS conduit	0.00	3324.51	0.00	Pull Rope 1	Soft-Fiber Polyester
0321	E-102, E-109, E-114, E-116	103	RGS conduit	2403.42	2576.49	1201.71	1473-26	50 pair #18, shielded pairs, overall shield 600 V, XLPE insul., PVC jacket
				2		1201.71	1474-26	50 pair #18, shielded pairs, overall shield 600 V, XLPE insul., PVC jacket
						0.00	Pull Rope 1	Soft-Fiber Polyester
0322	E-102, E-109, E-114, E-116	103	RGS conduit	0.00	3324.51	0.00	Pull Rope 1	Soft-Fiber Polyester
0323	E-102, E-109, E-114, E-116	103	RGS conduit	0.00	3324.51	0.00	Pull Rope 1	Soft-Fiber Polyester
0324	E-102, E-109, E-114, E-116	103	RGS conduit	0.00	3324.51	0.00	Pull Rope 1	Soft-Fiber Polyester
0325	E-102, E-109, E-114, E-116	103	RGS conduit	0.00	3324.51	0.00	Pull Rope 1	Soft-Fiber Polyester
0326	E-102, E-109, E-114, E-116	103	RGS conduit	0.00	3324.51	0.00	Pull Rope 1	Soft-Fiber Polyester
0327	E-102, E-109, E-114, E-116	103	RGS conduit	0.00	3324.51	0.00	Pull Rope 1	Soft-Fiber Polyester
0328	E-102, E-109, E-114, E-116	103	RGS conduit	196.20	2576.49	0.00	Pull Rope 1	Soft-Fiber Polyester
						98.10	1803	1 - 2 pair, shielded #18 with IS/OA, 600 V, PVC
						98.10	1804	1 - 2 pair, shielded #18 with IS/OA, 600 V, PVC
0329	E-102, E-109, E-114, E-116	103	RGS conduit	0.00	3324.51	0.00	Pull Rope 1	Soft-Fiber Polyester
0330	E-102, E-109, E-114, E-116	103	RGS conduit	0.00	3324.51	0.00	Pull Rope 1	Soft-Fiber Polyester
						~~1201.71~~	~~1474-26~~	~~50 pair #18, shielded pairs, 15/05 shield 600 V, XLPE insul., PVC jacket~~
0331	E-102, E-109, E-114, E-116	103	RGS conduit	0.00	3324.51	~~1201.71~~	~~1473-26~~	~~50 pair #18, shielded pairs, 15/05 shield 600 V, XLPE insul., PVC jacket~~
				2		0.00	Pull Rope 1	Soft-Fiber Polyester
0335	E-99, E-103, E-116	103	RGS conduit	2 0.00	3324.51	~~1201.71~~	~~1474-26~~	~~50 pair #18, shielded pairs, 15/05 shield 600 V, XLPE insul., PVC jacket~~
						0.00	Pull Rope 1	Soft-Fiber Polyester
0336	E-99, E-103, E-116	103	RGS conduit	0.00	3324.51	0.00	Pull Rope 1	Soft-Fiber Polyester
0337	E-99, E-103, E-116	103	RGS conduit	0.00	3324.51	0.00	Pull Rope 1	Soft-Fiber Polyester
0338	E-99, E-103, E-116	103	RGS conduit	196.20	2576.49	98.10	1803	1-2 pair, shielded #18 with overall shield, 600 V, PVC jacket
				2		98.10	1804	1-2 pair, shielded #18 with overall shield, 600 V, PVC jacket
						0.00	Pull Rope 1	Soft-Fiber Polyester
0339	E-99, E-103, E-116	103	RGS conduit	2403.42	2576.49	1201.71	1473-26	50 pair #18, shielded pairs, overall shield 600 V, XLPE insul., PVC jacket
				2		1201.71	1474-26	50 pair #18, shielded pairs, overall shield 600 V, XLPE insul., PVC jacket
						0.00	Pull Rope 1	Soft-Fiber Polyester
0340	E-99, E-103, E-116	103	RGS conduit	0.00	3324.51	~~1201.71~~	~~1473-26~~	~~50 pair #18, shielded pairs, 15/05 shield 600 V, XLPE insul., PVC jacket~~
				2		0.00	Pull Rope 1	Soft-Fiber Polyester
0346	E-98, E-103, E-116	103	RGS conduit	0.00	3324.51	0.00	Pull Rope 1	Soft-Fiber Polyester
0347	E-98, E-103, E-116	103	RGS conduit	0.00	3324.51	0.00	Pull Rope 1	Soft-Fiber Polyester
0348	E-98, E-103, E-116	103	RGS conduit	0.00	3324.51	0.00	Pull Rope 1	Soft-Fiber Polyester
0349	E-98, E-103, E-116	103	RGS conduit	0.00	3324.51	0.00	Pull Rope 1	Soft-Fiber Polyester
0350	E-98, E-103, E-116	103	RGS conduit	0.00	3324.51	0.00	Pull Rope 1	Soft-Fiber Polyester
0351	E-98, E-103, E-116	103	RGS conduit	0.00	3324.51	0.00	Pull Rope 1	Soft-Fiber Polyester
0355	E-103, E-116	103	RGS conduit	0.00	3324.51	0.00	Pull Rope 1	Soft-Fiber Polyester
0356	E-103, E-116	103	RGS conduit	0.00	3324.51	0.00	Pull Rope 1	Soft-Fiber Polyester

CONDUIT DATA

UNDERGROUND AND ROADWAY AT-GRADE

Conduit No	Reference	Size	Type	Total Fill (mm²)	Allowable Fill (mm²)	Cable Area (mm²)	Included Cable No.	Conductor Type
0357	E-103, E-116	103	RGS conduit	0.00	3324.51	0.00	Pull Rope 1	Soft-Fiber Polyester
0358	E-103, E-116	103	RGS conduit	0.00	3324.51	0.00	Pull Rope 1	Soft-Fiber Polyester
0368	E-94	41	RGS conduit	0.00	534.55	0.00	Pull Rope 1	Soft-Fiber Polyester
0374	E-94	41	RGS conduit	0.00	534.55	0.00	Pull Rope 1	Soft-Fiber Polyester
0412	E-101, E-111	103	RGS conduit	0.00	3324.51	0.00	Pull Rope 1	Soft-Fiber Polyester
0415	E-101, E-102, E-111, E-113	103	RGS conduit	732.20	2576.49	366.10	1626	1-3/C+gnd #4, 600 V, EPR insulation
						366.10	1627	1-3/C+gnd #4, 600 V, EPR insulation
						0.00	Pull Rope 1	Soft-Fiber Polyester
0416	E-101, E-102, E-111, E-113	103	RGS conduit 1	849.65	3324.51 1	0.00	Pull Rope 1	Soft-Fiber Polyester
						262.68	A-1006	1-3/C + gnd #8, 600 V, EPR insulation
						262.68	A-1007	1-3/C + gnd #8, 600 V, EPR insulation
						324.29	A-1008	1-3/C + gnd #6, 600 V, EPR insulation
0417	E-101, E-102, E-111, E-113	103	RGS conduit	0.00	3324.51	0.00	Pull Rope 1	Soft-Fiber Polyester
0418	E-101, E-102, E-111, E-113	103	RGS conduit	0.00	3324.51	0.00	Pull Rope 1	Soft-Fiber Polyester
0419	E-101, E-102, E-111, E-113	103	RGS conduit	0.00	3324.51	0.00	Pull Rope 1	Soft-Fiber Polyester
0420	E-101, E-102, E-111, E-113	103	RGS conduit	0.00	3324.51	0.00	Pull Rope 1	Soft-Fiber Polyester
0421	E-101, E-102, E-111, E-113	103	RGS conduit	0.00	3324.51	0.00	Pull Rope 1	Soft-Fiber Polyester
0422	E-101, E-102, E-111, E-113	103	RGS conduit	0.00	3324.51	0.00	Pull Rope 1	Soft-Fiber Polyester
0423	E-101, E-102, E-111, E-113	103	RGS conduit	0.00	3324.51	0.00	Pull Rope 1	Soft-Fiber Polyester
0424	E-101, E-102, E-111, E-113	103	RGS conduit	972.87	3324.51	324.29	A-1005	1-3/C+gnd #6, 600 V, EPR insulation
						0.00	Pull Rope 1	Soft-Fiber Polyester
						324.29	S-1602	1-3/C+gnd #6, 600 V, EPR insulation
						~~324.29~~	~~S-1603~~	~~1-3/C+gnd #6, 600 V, EPR insulation~~
0425	E-101, E-102, E-111, E-113	103	RGS conduit	138.72	2576.49	69.36	1656-1	1- 4/C #16 with overall shield, 600 V, FR-EP insulation, CPE jacket
				2		69.36	1656-2	1- 4/C #16 with overall shield, 600 V, FR-EP insulation, CPE jacket
						0.00	Pull Rope 1	Soft-Fiber Polyester
0426	E-101, E-102, E-111, E-113	103	RGS conduit	0.00	3324.51	0.00	Pull Rope 1	Soft-Fiber Polyester
0430	E-102, E-109, E-113, E-115	103	RGS conduit	732.20	2576.49	366.10	1626	1-3/C+gnd #4, 600 V, EPR insulation
						366.10	1627	1-3/C+gnd #4, 600 V, EPR insulation
						0.00	Pull Rope 1	Soft-Fiber Polyester
0431	E-102, E-109, E-113, E-115	103	RGS conduit 1	849.65	3324.51 1	0.00	Pull Rope 1	Soft-Fiber Polyester
						262.68	A-1006	1-3/C + gnd #8, 600 V, EPR insulation
						262.68	A-1007	1-3/C + gnd #8, 600 V, EPR insulation
						324.29	A-1008	1-3/C + gnd #6, 600 V, EPR insulation

For continuation, see next sheet.

DETAILS
CONDUIT AND TRAY SCHEDULE

E-233

CALCULATED/ DESIGNED BY	FK	DATE 2/06	REVISED BY	DATE REVISED
CHECKED BY	AB	2/06		

DESIGN OVERSIGHT: BEHZAD GOLEMOHAMMADI

STATE OF CALIFORNIA - DEPARTMENT OF TRANSPORTATION

Caltrans

FOR REDUCED PLANS ORIGINAL SCALE IS IN MILLIMETERS 0 20 40 60 80

DGN FILE =>T:\13103\MS\pse\OTD-Contract 1\CCO\Electrical\CCO-Conductor change & misc\40120lud233r2.dgn
USERNAME =>llorico

CU 04251 | EA 0120L1

LAST REVISION 00-00-00

DATE PLOTTED => 2/2/2010
TIME PLOTTED => 1:49:38 PM

DIST	COUNTY	ROUTE	KILOMETER POST TOTAL PROJECT	SHEET No.	TOTAL SHEETS
04	Ala	80	1.6/2.7	587 R3	643

REGISTERED ELECTRICAL ENGINEER 05/15/06 DATE

1-29-07
PLANS APPROVAL DATE

PB POWER, Inc.
A Parsons Brinckerhoff Company
303 Second St., Suite 700N
San Francisco, CA 94107-1317

The State of California or its officers or agents shall not be responsible for the accuracy or completeness of electronic copies of this plan sheet.

To get to the Caltrans web site, go to: http://www.dot.ca.gov

REGISTERED PROFESSIONAL ENGINEER FADI WALIEDDINE No. 11465 Exp. 12/31/2009 ELECTRICAL STATE OF CALIFORNIA

REGISTERED PROFESSIONAL ENGINEER DAVID H. DTO No. 10699 Exp. 06/30/2011 ELECTRICAL STATE OF CALIFORNIA

REGISTERED PROFESSIONAL ENGINEER JENS ERLINGSSON No. 8249 Exp. 9/30/08 ELECTRICAL STATE OF CALIFORNIA

Caltrans Metric

MARK	DATE	DESCRIPTIONS	REV	CK	CCO No.
3	2/24/10	Revised cable routed inside conduit 0450 and 0451	JH	EJL	Final Routing & Misc
2	1/29/10	Revised cable routed inside conduit 0440, 0452, 0600, 0603, 0605, 0607, 0609, 0611, 0613, 0615, 0617, 0619 and 0621.	JH	EJL	Conductor Change/ Misc.
1	8/29/08	Added cable/ckts. A-1006, A-1007, A-1008.	JH	EJL	Light Pipe

REVISIONS

CONTRACT CHANGE ORDER NO. 146, SHEET 40 OF 50

CONDUIT DATA

UNDERGROUND AND ROADWAY AT-GRADE

Conduit No.	Reference	Size	Type	Total Fill (mm²)	Allowable Fill (mm²)	Cable Area (mm²)	Included Cable No.	Conductor Type
0432	E-102, E-109, E-113, E-115	103	RGS conduit	0.00	3324.51	0.00	Pull Rope 1	Soft-Fiber Polyester
0433	E-102, E-109, E-113, E-115	103	RGS conduit	0.00	3324.51	0.00	Pull Rope 1	Soft-Fiber Polyester
0434	E-102, E-109, E-113, E-115	103	RGS conduit	0.00	3324.51	0.00	Pull Rope 1	Soft-Fiber Polyester
0435	E-102, E-109, E-113, E-115	103	RGS conduit	0.00	3324.51	0.00	Pull Rope 1	Soft-Fiber Polyester
0436	E-102, E-109, E-113, E-115	103	RGS conduit	0.00	3324.51	0.00	Pull Rope 1	Soft-Fiber Polyester
0437	E-102, E-109, E-113, E-115	103	RGS conduit	0.00	3324.51	0.00	Pull Rope 1	Soft-Fiber Polyester
0438	E-102, E-109, E-113, E-115	103	RGS conduit	0.00	3324.51	0.00	Pull Rope 1	Soft-Fiber Polyester
0439	E-102, E-109, E-113, E-115	103	RGS conduit	0.00	3324.51	0.00	Pull Rope 1	Soft-Fiber Polyester
0440	E-102, E-109, E-113, E-115	103	RGS conduit	138.72	2576.49	69.36	1656-1	1- 4/C #16 with overall shield, 600 V, FR-EP insulation, CPE jacket
				2		69.36	1656-2	1- 4/C #16 with overall shield, 600 V, FR-EP insulation, CPE jacket
						0.00	Pull Rope 1	Soft-Fiber Polyester
0441	E-102, E-109, E-113, E-115	103	RGS conduit	972.87	3324.51	0.00	Pull Rope 1	Soft-Fiber Polyester
						324.29	S-1601	1-3/C+gnd #6, 600 V, EPR insulation
						324.29	S-1602	1-3/C+gnd #6, 600 V, EPR insulation
						324.29	A-1005	1-3/C+gnd #6, 600 V, EPR insulation
0450	E-99, E-103, E-115	103	RGS conduit	3 324.29	4404.97	~~366.10~~	~~1626~~	~~1-3/C+gnd #4, 600 V, EPR insulation~~
						~~366.10~~	~~1627~~	~~1-3/C+gnd #4, 600 V, EPR insulation~~
						~~0.00~~	~~Pull Rope 1~~	~~Soft-Fiber Polyester~~
						~~324.29~~	~~A-1008~~	~~1-3/C+gnd #6, 600 V, EPR insulation~~
0451	E-99, E-103, E-115	103	RGS conduit	1 1257.56	3324.51	0.00	Pull Rope 1	Soft-Fiber Polyester
					1	262.68	A-1006	1-3/C + gnd #8, 600 V, EPR insulation
						262.68	A-1007	1-3/C + gnd #8, 600 V, EPR insulation
						~~324.29~~	~~A-1008~~	~~1-3/C + gnd #6, 600 V, EPR insulation~~
						366.10	1626	1-3/C + gnd #4, 600 V, EPR insulation
						366.10	1627	1-3/C + gnd #4, 600 V, EPR insulation
0452	E-99, E-103, E-115	103	RGS conduit	138.72	2576.49	69.36	1656-1	1- 4/C #16 with overall shield, 600 V, FR-EP insulation, CPE jacket
				2		69.36	1656-2	1- 4/C #16 with overall shield, 600 V, FR-EP insulation, CPE jacket
						0.00	Pull Rope 1	Soft-Fiber Polyester
0453	E-99, E-103, E-115	103	RGS conduit	972.87	3324.51	324.29	S-1601	1-3/C+gnd #6, 600 V, EPR insulation
						324.29	S-1602	1-3/C+gnd #6, 600 V, EPR insulation
						324.29	A-1005	1-3/C+gnd #6, 600 V, EPR insulation
						0.00	Pull Rope 1	Soft-Fiber Polyester
0455	E-98, E-103, E-115	103	RGS conduit	0.00	3324.51	0.00	Pull Rope 1	Soft-Fiber Polyester
0456	E-98, E-103, E-115	103	RGS conduit	0.00	3324.51	0.00	Pull Rope 1	Soft-Fiber Polyester
0457	E-98, E-103, E-115	103	RGS conduit	0.00	3324.51	0.00	Pull Rope 1	Soft-Fiber Polyester
0458	E-98, E-103, E-115	103	RGS conduit	0.00	3324.51	0.00	Pull Rope 1	Soft-Fiber Polyester
0460	E-103, E-115	78	RGS conduit	0.00	1935.24	0.00	Pull Rope 1	Soft-Fiber Polyester
0461	E-103, E-115	78	RGS conduit	0.00	1935.24	0.00	Pull Rope 1	Soft-Fiber Polyester
0462	E-103, E-115	78	RGS conduit	0.00	1935.24	0.00	Pull Rope 1	Soft-Fiber Polyester
0463	E-103, E-115	78	RGS conduit	0.00	1935.24	0.00	Pull Rope 1	Soft-Fiber Polyester
0482	E-94	41	RGS conduit	0.00	534.55	0.00	Pull Rope 1	Soft-Fiber Polyester
0498			Not used					
0530	E-99, E-103, E-116	103	RGS conduit	0.00	3324.51	0.00	Pull Rope 1	Soft-Fiber Polyester
0531	E-99, E-103, E-116	103	RGS conduit	0.00	3324.51	0.00	Pull Rope 1	Soft-Fiber Polyester
0532	E-99, E-103, E-116	103	RGS conduit	0.00	3324.51	0.00	Pull Rope 1	Soft-Fiber Polyester
0533	E-99, E-103, E-116	103	RGS conduit	0.00	3324.51	0.00	Pull Rope 1	Soft-Fiber Polyester
0540	E-98, E-103, E-116	103	RGS conduit	0.00	3324.51	0.00	Pull Rope 1	Soft-Fiber Polyester
0541	E-98, E-103, E-116	103	RGS conduit	0.00	3324.51	0.00	Pull Rope 1	Soft-Fiber Polyester
0542	E-98, E-103, E-116	103	RGS conduit	0.00	3324.51	0.00	Pull Rope 1	Soft-Fiber Polyester
0543	E-98, E-103, E-116	103	RGS conduit	2 0.00	3324.51	0.00	Pull Rope 1	Soft-Fiber Polyester
0600	E-102, E-107, E-114	103	RGS conduit	0.00	3324.51	0.00	Pull Rope 1	Soft-Fiber Polyester
						~~1201.71~~	~~2473-27~~	~~50 pair #18, shielded pairs, IS/OS shield 600 V, XLPE insul., PVC jacket~~
0601	E-102, E-107, E-114	103	RGS conduit	0.00	4404.97	0.00	Pull Rope 1	Soft-Fiber Polyester 2
0602	E-102, E-107, E-114	103	RGS conduit	0.00	3324.51	0.00	Pull Rope 1	Soft-Fiber Polyester
0489	E-94	41	RGS conduit	0.00	534.55		Pull Rope 1	Soft-Fiber Polyester

CONDUIT DATA

UNDERGROUND AND ROADWAY AT-GRADE

Conduit No.	Reference	Size	Type	Total Fill (mm²)	Allowable Fill (mm²)	Cable Area (mm²)	Included Cable No.	Conductor Type
0603	E-102, E-107, E-114	103	RGS conduit	2403.42	2576.49	0.00	Pull Rope 1	Soft-Fiber Polyester
				2		1201.71	2474-27	50 pair #18, shielded pairs, overall shield 600 V, XLPE insul., PVC jacket
						1201.71	2473-27	50 pair #18, shielded pairs, overall shield 600 V, XLPE insul., PVC jacket
0604	E-107	103	RGS conduit	0.00	3324.51	0.00	Pull Rope 1	50 pair #18, shielded pairs, IS/OS shield 600 V, XLPE insul., PVC jacket
0605	E-107	103	RGS conduit	0.00	3324.51	~~1201.71~~	~~2473-27~~	~~50 pair #18, shielded pairs, IS/OS shield 600 V, XLPE insul., PVC jacket~~
				2		0.00	Pull Rope 1	Soft-Fiber Polyester
0606	E-107	103	RGS conduit	0.00	3324.51	0.00	Pull Rope 1	Soft-Fiber Polyester
0607	E-107	103	RGS conduit	2403.42	2576.49	0.00	Pull Rope 1	Soft-Fiber Polyester
				2		1201.71	2474-27	50 pair #18, shielded pairs, overall shield 600 V, XLPE insul., PVC jacket
						1201.71	2473-27	50 pair #18, shielded pairs, overall shield 600 V, XLPE insul., PVC jacket
0608	E-107	103	RGS conduit	0.00	3324.51	0.00	Pull Rope 1	Soft-Fiber Polyester
0609	E-107	103	RGS conduit	0.00	3324.51	~~1201.71~~	~~2473-27~~	~~50 pair #18, shielded pairs, IS/OS shield 600 V, XLPE insul., PVC jacket~~
					2	0.00	Pull Rope 1	Soft-Fiber Polyester
0610	E-107	103	RGS conduit	0.00	3324.51	0.00	Pull Rope 1	Soft-Fiber Polyester
0611	E-107	103	RGS conduit	2403.42	2576.49	1201.71	2473-27	50 pair #18, shielded pairs, overall shield 600 V, XLPE insul., PVC jacket
				2		1201.71	2474-27	50 pair #18, shielded pairs, overall shield 600 V, XLPE insul., PVC jacket
						0.00	Pull Rope 1	Soft-Fiber Polyester
0612	E-107	103	RGS conduit	0.00	3324.51	0.00	Pull Rope 1	Soft-Fiber Polyester
0613	E-107	103	RGS conduit	0.00	3324.51	~~1201.71~~	~~2473-27~~	~~50 pair #18, shielded pairs, IS/OS shield 600 V, XLPE insul., PVC jacket~~
					2	0.00	Pull Rope 1	Soft-Fiber Polyester
0614	E-107	103	RGS conduit	0.00	3324.51	0.00	Pull Rope 1	Soft-Fiber Polyester
0615	E-107	103	RGS conduit	2403.42	2576.49	1201.71	2473-27	50 pair #18, shielded pairs, overall shield 600 V, XLPE insul., PVC jacket
				2		1201.71	2474-27	50 pair #18, shielded pairs, overall shield 600 V, XLPE insul., PVC jacket
						0.00	Pull Rope 1	Soft-Fiber Polyester
0616	E-107	103	RGS conduit	0.00	3324.51	0.00	Pull Rope 1	Soft-Fiber Polyester
0617	E-107	103	RGS conduit	0.00	3324.51	~~1201.71~~	~~2473-27~~	~~50 pair #18, shielded pairs, IS/OS shield 600 V, XLPE insul., PVC jacket~~
					2	0.00	Pull Rope 1	Soft-Fiber Polyester
0618	E-107	103	RGS conduit	0.00	3324.51	0.00	Pull Rope 1	Soft-Fiber Polyester
0619	E-107	103	RGS conduit	2403.42	2576.49	1201.71	2473-27	50 pair #18, shielded pairs, overall shield 600 V, XLPE insul., PVC jacket
				2		1201.71	2474-27	50 pair #18, shielded pairs, overall shield 600 V, XLPE insul., PVC jacket
						0.00	Pull Rope 1	Soft-Fiber Polyester
0620	E-107	103	RGS conduit	0.00	3324.51	0.00	Pull Rope 1	Soft-Fiber Polyester
0621	E-107	103	RGS conduit	0.00	3324.51	~~1201.71~~	~~2473-27~~	~~50 pair #18, shielded pairs, IS/OS shield 600 V, XLPE insul., PVC jacket~~
					2	0.00	Pull Rope 1	Soft-Fiber Polyester
0622	E-107	103	RGS conduit	0.00	4404.97	0.00	Pull Rope 1	Soft-Fiber Polyester

For continuation, see next sheet.

DETAILS
CONDUIT AND TRAY SCHEDULE

E-234

REVISED BY	DATE REVISED
FK	2/06
AB	

CALCULATED/DESIGNED BY FK
CHECKED BY AB
DESIGN OVERSIGHT BEHZAD GOLEMOHAMMADI

STATE OF CALIFORNIA - DEPARTMENT OF TRANSPORTATION
Caltrans

FOR REDUCED PLANS ORIGINAL SCALE IS IN MILLIMETERS 0 20 40 60 80

DGN FILE =>t:\13103\ms\pse\OTD-Contract 1\CCO\Electrical\CCO-Final Routing\2010-02-24 Submittal\401201ua234r3.dgn
USERNAME =>liorico

CU 04251 | EA 0120L1

DATE PLOTTED => 2/23/2010
TIME PLOTTED => 1:43:43 PM

LAST REVISION 00-00-00

DIST	COUNTY	ROUTE	KILOMETER POST TOTAL PROJECT	SHEET No	TOTAL SHEETS
04	Ala	80	1.6/2.7	588 R2	643

REGISTERED ELECTRICAL ENGINEER 05/15/06 DATE

1-29-07
PLANS APPROVAL DATE

REGISTERED PROFESSIONAL ENGINEER JENS ERLINGSSON No. 8249 Exp. 9/30/08 ELECTRICAL STATE OF CALIFORNIA

PB POWER, Inc.
A Parsons Brinckerhoff Company
303 Second St., Suite 700N
San Francisco, CA 94107-1317

The State of California or its officers or agents shall not be responsible for the accuracy or completeness of electronic copies of this plan sheet.

To get to the Caltrans web site, go to http://www.dot.ca.gov

Caltrans Metric

REGISTERED PROFESSIONAL ENGINEER FADI WALI EDDINE No. 11465 Exp. 12/31/2009 ELECTRICAL STATE OF CALIFORNIA (1)

REGISTERED PROFESSIONAL ENGINEER DAVID H. OTO No. 10699 Exp. 06/30/2011 ELECTRICAL STATE OF CALIFORNIA (2)

MARK	DATE	DESCRIPTIONS	REV	CK	CCO No.
2	1/29/10	Revised cable routed inside conduit 0623, 0625, 0627, 0629, 0631, 0633, 0635, 0637, 0639, 0641, 0643, 0645, 0647, 0649 and 0651.	JH	EJL	Conductor Change/ Misc
1	8/29/08	Deleted Cable/Ckt. 1809. Added cable/Ckt and 1811	MP	EJL	18S1
		REVISIONS			

CONTRACT CHANGE ORDER NO. 146
SHEET 41 OF 50

CONDUIT DATA

UNDERGROUND AND ROADWAY AT-GRADE

Conduit No.	Reference	Size	Type	Total Fill (mm²)	Allowable Fill (mm²)	Cable Area (mm²)	Included Cable No.	Conductor Type
0623	E-107	103	RGS conduit	2403.42	2576.49	1201.71	2473-27	50 pair #18, shielded pairs, overall shield 600 V, XLPE insul., PVC jacket
				(2)		1201.71	2474-27	50 pair #18, shielded pairs, overall shield 600 V, XLPE insul., PVC jacket
						0.00	Pull Rope 1	Soft-Fiber Polyester
0624	E-108	103	RGS conduit	0.00	3324.51	0.00	Pull Rope 1	Soft-Fiber Polyester
0625	E-108	103	RGS conduit	0.00	3324.51	~~1201.71~~	~~2473-27~~	~~50 pair #18, shielded pairs, IS/OS shield 600 V, XLPE insul., PVC jacket~~
				(2)		0.00	Pull Rope 1	Soft-Fiber Polyester
0626	E-108	103	RGS conduit	0.00	3324.51	0.00	Pull Rope 1	Soft-Fiber Polyester
0627	E-108	103	RGS conduit	2403.42	2576.49	1201.71	2473-27	50 pair #18, shielded pairs, overall shield 600 V, XLPE insul., PVC jacket
				(2)		1201.71	2474-27	50 pair #18, shielded pairs, overall shield 600 V, XLPE insul., PVC jacket
						0.00	Pull Rope 1	Soft-Fiber Polyester
0628	E-108	103	RGS conduit	0.00	3324.51	0.00	Pull Rope 1	Soft-Fiber Polyester
0629	E-108	103	RGS conduit	0.00	3324.51	0.00	Pull Rope 1	Soft-Fiber Polyester
				(2)		~~1201.71~~	~~2473-27~~	~~50 pair #18, shielded pairs, IS/OS shield 600 V, XLPE insul., PVC jacket~~
0630	E-108	103	RGS conduit	0.00	3324.51	0.00	Pull Rope 1	Soft-Fiber Polyester
0631	E-108	103	RGS conduit	2403.42	2576.49	1201.71	2473-27	50 pair #18, shielded pairs, overall shield 600 V, XLPE insul., PVC jacket
				(2)		1201.71	2474-27	~~50 pair #18, shielded pairs, overall shield~~ 600 V, XLPE insul., PVC jacket
						0.00	Pull Rope 1	Soft-Fiber Polyester
0632	E-108	103	RGS conduit	0.00	3324.51	0.00	Pull Rope 1	Soft-Fiber Polyester
0633	E-108	103	RGS conduit	0.00	3324.51	0.00	Pull Rope 1	Soft-Fiber Polyester
				(2)		~~1201.71~~	~~2473-27~~	~~50 pair #18, shielded pairs, IS/OS shield 600 V, XLPE insul., PVC jacket~~
0634	E-108	103	RGS conduit	0.00	3324.51	0.00	Pull Rope 1	Soft-Fiber Polyester
0635	E-108	103	RGS conduit	2403.42	2576.49	1201.71	2473-27	50 pair #18, shielded pairs, overall shield 600 V, XLPE insul., PVC jacket
				(2)		1201.71	2474-27	50 pair #18, shielded pairs, overall shield 600 V, XLPE insul., PVC jacket
						0.00	Pull Rope 1	Soft-Fiber Polyester
0636	E-108	103	RGS conduit	0.00	3324.51	0.00	Pull Rope 1	Soft-Fiber Polyester
0637	E-108	103	RGS conduit	0.00	3324.51	~~1201.71~~	~~2473-27~~	~~50 pair #18, shielded pairs, IS/OS shield 600 V, XLPE insul., PVC jacket~~
				(2)		0.00	Pull Rope 1	Soft-Fiber Polyester
0638	E-108	103	RGS conduit	0.00	3324.51	0.00	Pull Rope 1	Soft-Fiber Polyester
0639	E-108	103	RGS conduit	2403.42	2576.49	1201.71	2473-27	50 pair #18, shielded pairs, overall shield 600 V, XLPE insul., PVC jacket
				(2)		1201.71	2474-27	50 pair #18, shielded pairs, overall shield 600 V, XLPE insul., PVC jacket
						0.00	Pull Rope 1	Soft-Fiber Polyester
0640	E-108	103	RGS conduit	0.00	3324.51	0.00	Pull Rope 1	Soft-Fiber Polyester
0641	E-108	103	RGS conduit	0.00	3324.51	~~1201.71~~	~~2473-27~~	~~50 pair #18, shielded pairs, IS/OS shield 600 V, XLPE insul., PVC jacket~~
				(2)		0.00	Pull Rope 1	Soft-Fiber Polyester
0642	E-108	103	RGS conduit	0.00	3324.51	0.00	Pull Rope 1	Soft-Fiber Polyester
0643	E-108	103	RGS conduit	2403.42	2576.49	1201.71	2473-27	50 pair #18, shielded pairs, overall shield 600 V, XLPE insul., PVC jacket
				(2)		1201.71	2474-27	50 pair #18, shielded pairs, overall shield 600 V, XLPE insul., PVC jacket
						0.00	Pull Rope 1	Soft-Fiber Polyester
0644	E-108, E-118	103	RGS conduit	0.00	3324.51	0.00	Pull Rope 1	Soft-Fiber Polyester
0645	E-108, E-118	103	RGS conduit	0.00	3324.51	~~1201.71~~	~~2473-27~~	~~50 pair #18, shielded pairs, IS/OS shield 600 V, XLPE insul., PVC jacket~~
				(2)		0.00	Pull Rope 1	Soft-Fiber Polyester
0646	E-108, E-118	103	RGS conduit	0.00	3324.51	0.00	Pull Rope 1	Soft-Fiber Polyester
0647	E-108, E-118	103	RGS conduit	2403.42	2576.49	1201.71	2473-27	50 pair #18, shielded pairs, overall shield 600 V, XLPE insul., PVC jacket
				(2)		1201.71	2474-27	50 pair #18, shielded pairs, overall shield 600 V, XLPE insul., PVC jacket
						0.00	Pull Rope 1	Soft-Fiber Polyester
0648	E-109, E-118	103	RGS conduit	0.00	3324.51	0.00	Pull Rope 1	Soft-Fiber Polyester
0649	E-109, E-118	103	RGS conduit	0.00	3324.51	~~1201.71~~	~~2473-27~~	~~50 pair #18, shielded pairs, IS/OS shield 600 V, XLPE insul., PVC jacket~~
				(2)		0.00	Pull Rope 1	Soft-Fiber Polyester
0650	E-109, E-118	103	RGS conduit	0.00	3324.51	0.00	Pull Rope 1	Soft-Fiber Polyester
0651	E-109, E-118	103	RGS conduit	2403.42	2576.49	1201.71	2473-27	50 pair #18, shielded pairs, overall shield 600 V, XLPE insul., PVC jacket
				(2)		1201.71	2474-27	50 pair #18, shielded pairs, overall shield 600 V, XLPE insul., PVC jacket
						0.00	Pull Rope 1	Soft-Fiber Polyester

CONDUIT DATA

UNDERGROUND AND ROADWAY AT-GRADE

Conduit No.	Reference	Size	Type	Total Fill (mm²)	Allowable Fill (mm²)	Cable Area (mm²)	Included Cable No.	Conductor Type
0811	E-109	103	RGS conduit	0.00	3324.51	0.00	Pull Rope 1	Soft-Fiber Polyester
0812	E-109	103	RGS conduit	0.00	3324.51	0.00	Pull Rope 1	Soft-Fiber Polyester
0813	E-109	103	RGS conduit	0.00	3324.51	0.00	Pull Rope 1	Soft-Fiber Polyester
0814	E-109	103	RGS conduit	0.00	3324.51	0.00	Pull Rope 1	Soft-Fiber Polyester
1251	E-93	41	RGS conduit	98.10	708.28	98.10	1807	1 - 2 pair, shielded #18 with IS/OA , 600 V, PVC
						0.00	Pull Rope 1	Soft-Fiber Polyester
1252	E-93, E-94	41	RGS conduit	98.10	708.28	98.10	1807	1 - 2 pair, shielded #18 with IS/OA , 600 V, PVC
						0.00	Pull Rope 1	Soft-Fiber Polyester
1253	E-94	41	RGS conduit	98.10	708.28	98.10	1807	1 - 2 pair, shielded #18 with IS/OA , 600 V, PVC
						0.00	Pull Rope 1	Soft-Fiber Polyester
1254	E-94, E-95	41	RGS conduit	98.10	708.28	0.00	Pull Rope 1	Soft-Fiber Polyester
						~~98.10~~	~~1809~~	~~1 - 2 pair, shielded #18 with IS/OA , 600 V, PVC~~ (1)
						98.10	1811	1 - 2 pair, shielded #18 with IS/OA , 600 V, PVC
1255	E-95	41	RGS conduit	98.10	708.28	0.00	Pull Rope 1	Soft-Fiber Polyester
						~~98.10~~	~~1809~~	~~1 - 2 pair, shielded #18 with IS/OA , 600 V, PVC~~ (1)
						98.10	1811	1 - 2 pair, shielded #18 with IS/OA , 600 V, PVC
1256	E-95	41	RGS conduit	98.10	708.28	0.00	Pull Rope 1	Soft-Fiber Polyester
						~~98.10~~	~~1809~~	~~1 - 2 pair, shielded #18 with IS/OA , 600 V, PVC~~ (1)
						98.10	1811	1 - 2 pair, shielded #18 with IS/OA , 600 V, PVC
1257	E-95, E-96	41	RGS conduit	98.10	708.28	0.00	Pull Rope 1	Soft-Fiber Polyester
						~~98.10~~	~~1809~~	~~1 - 2 pair, shielded #18 with IS/OA , 600 V, PVC~~ (1)
						98.10	1811	1 - 2 pair, shielded #18 with IS/OA , 600 V, PVC
1258	E-96	41	RGS conduit	98.10	708.28	0.00	Pull Rope 1	Soft-Fiber Polyester
						98.10	1811	1 - 2 pair, shielded #18 with IS/OA , 600 V, PVC
1259	E-96, E-97	41	RGS conduit	98.10	708.28	98.10	1811	1 - 2 pair, shielded #18 with IS/OA , 600 V, PVC
						0.00	Pull Rope 1	Soft-Fiber Polyester
1260	E-97	41	RGS conduit	98.10	708.28	98.10	1811	1 - 2 pair, shielded #18 with IS/OA , 600 V, PVC
						0.00	Pull Rope 1	Soft-Fiber Polyester
1351	E-93	41	RGS conduit	0.00	534.55	0.00	Pull Rope 1	Soft-Fiber Polyester
1352	E-93, E-94	41	RGS conduit	0.00	534.55	0.00	Pull Rope 1	Soft-Fiber Polyester
1353	E-94	41	RGS conduit	0.00	534.55	0.00	Pull Rope 1	Soft-Fiber Polyester
1354	E-94, E-95	41	RGS conduit	0.00	534.55	0.00	Pull Rope 1	Soft-Fiber Polyester
1355	E-95	41	RGS conduit	0.00	534.55	0.00	Pull Rope 1	Soft-Fiber Polyester
1356	E-95	41	RGS conduit	0.00	534.55	0.00	Pull Rope 1	Soft-Fiber Polyester
1357	E-95, E-96	41	RGS conduit	0.00	534.55	0.00	Pull Rope 1	Soft-Fiber Polyester

For continuation, see next sheet.

DETAILS
CONDUIT AND TRAY SCHEDULE

E-235

STATE OF CALIFORNIA - DEPARTMENT OF TRANSPORTATION
Caltrans

DESIGN OVERSIGHT: BEHZAD GOLEMOHAMMADI

CALCULATED/ DESIGNED BY	DATE 2/06	REVISED BY	DATE REVISED
FK	2/06	AB	2/06
CHECKED BY			

LAST REVISION 00-00-00

DATE PLOTTED => 2/2/2010
TIME PLOTTED => 1:49:39 PM

FOR REDUCED PLANS ORIGINAL SCALE IS IN MILLIMETERS 0 20 40 60 80

DGN FILE =>t:\13103\WS\pse\OTD-Contract 1\CCO\Electrical\CCO-Conductor change & misc\40120lud235r2.dgn
USERNAME =>fusco

CU 04251 | EA 0120L1

DIST	COUNTY	ROUTE	KILOMETER POST TOTAL PROJECT	SHEET No	TOTAL SHEETS
04	Ala	80	1.6/2.7	589 R3	643

REGISTERED ELECTRICAL ENGINEER 05/15/06 DATE

1-29-07
PLANS APPROVAL DATE

REGISTERED PROFESSIONAL ENGINEER JENS ERLINGSSON No. 8249 Exp. 9/30/09 ELECTRICAL STATE OF CALIFORNIA

PB POWER, Inc.
A Parsons Brinckerhoff Company
303 Second St., Suite 700N
San Francisco, CA 94107-1317

The State of California or its officers or agents shall not be responsible for the accuracy or completeness of electronic copies of this plan sheet.

Caltrans now has a web site! To get to the web site, go to http://www.dot.ca.gov

Caltrans Metric

CONDUIT DATA

UNDERGROUND AND ROADWAY AT-GRADE

Conduit No	Reference	Size	Type	Total Fill (mm²)	Allowable Fill (mm²)	Cable Area (mm²)	Included Cable No.	Conductor Type
1358	E-96	41	RGS conduit	0.00	534.55	0.00	Pull Rope 1	Soft-Fiber Polyester
1359	E-96, E-97	41	RGS conduit	0.00	534.55	0.00	Pull Rope 1	Soft-Fiber Polyester
1360	E-97	41	RGS conduit	0.00	534.55	0.00	Pull Rope 1	Soft-Fiber Polyester
1651	E-93	41	RGS conduit	0.00	534.55	0.00	Pull Rope 1	Soft-Fiber Polyester
1652	E-93, E-94	41	RGS conduit	0.00	534.55	0.00	Pull Rope 1	Soft-Fiber Polyester
1653	E-94	41	RGS conduit	0.00	534.55	0.00	Pull Rope 1	Soft-Fiber Polyester
1751	E-93	41	RGS conduit	0.00	534.55	0.00	Pull Rope 1	Soft-Fiber Polyester
1752	E-93, E-94	41	RGS conduit	0.00	534.55	0.00	Pull Rope 1	Soft-Fiber Polyester
1753	E-94	41	RGS conduit	0.00	534.55	0.00	Pull Rope 1	Soft-Fiber Polyester
(E) 144	E-92 (Note 1)	78	RGS conduit	1201.71	2564.19	1201.71	2473-27	50 pair #18, shielded pairs, overall shield 600 V, XLPE insul., PVC jacket
(E) 145	E-92 (Note 1)	78	RGS conduit	1201.71	2564.19	1201.71	2474-27	50 pair #18, shielded pairs, overall shield 600 V, XLPE insul., PVC jacket
(E) 146	E-92 (Note 1)	103	RGS conduit	1201.71 △3	4404.97	1201.71	2474-27	50 pair #18, shielded pairs, overall shield 600 V, XLPE insul., PVC jacket
						~~1201.71~~	~~2473-27~~	~~50 pair #18, shielded pairs, overall shield 600 V, XLPE insul., PVC jacket~~
(E) 207	E-92 (Note 1)	103	RGS conduit	2628.48	3324.51	2628.48	1003-1	3-1/C #4/0, 15 kV, EPR Insulation
(E) 273	E-92 (Note 1)	103	RGS conduit	2403.42	3324.51	1201.71	2473-27	50 pair #18, shielded pairs, overall shield 600 V, XLPE insul., PVC jacket
						1201.71	2474-27	50 pair #18, shielded pairs, overall shield 600 V, XLPE insul., PVC jacket
0355A	E-103, 116	41	RGS conduit	0.00	534.55	0.00	Pull Rope 1	Soft-Fiber Polyester
0358A	E-103, 116	103	RGS conduit	0.00	3324.51	0.00	Pull Rope 1	Soft-Fiber Polyester
0460A	E-103, 115	78	RGS conduit	0.00	1935.24	0.00	Pull Rope 1	Soft-Fiber Polyester
0460B	E-103, 115	78	RGS conduit	0.00	1935.24	0.00	Pull Rope 1	Soft-Fiber Polyester
0320A	E-102, 109 E-114, 116	103	RGS conduit	0.00	3324.51	0.00	Pull Rope 1	Soft-Fiber Polyester
0321A	E-102, 109 E-114, 116	103	RGS conduit	0.00	3324.51	0.00	Pull Rope 1	Soft-Fiber Polyester
0322A △3	E-102, 109 E-114, 116	103	RGS conduit	0.00	3324.51	0.00	Pull Rope 1	Soft-Fiber Polyester

△1 △2

NOTES:

1. Existing conduit and cable routing to Oakland Substation.

△1 △2

REGISTERED PROFESSIONAL ENGINEER FADI WALIEDDINE No. 11465 Exp. 12/31/2009 ELECTRICAL STATE OF CALIFORNIA

△3

REGISTERED PROFESSIONAL ENGINEER DAVID H. OTO No. 10699 Exp. 06/30/2011 ELECTRICAL STATE OF CALIFORNIA

MARK	DATE	DESCRIPTIONS	REV	CK	CCO NO.
△3	02/24/10	Revised cable routed inside conduits (E) 146. Changed conduit numbers 0322B to 0322A.	JH	EJL	Final Routing & Misc
△2	10/30/09	Added conduits 0320A, 0321A and and 0322A.	EJL	FSW	Jack and Bore
△1	6/5/09	Added conduits 0355A, 0358A, 0460A and 0460B	EJL	FSW	MH Conduits

REVISIONS

CONTRACT CHANGE ORDER NO. 146
SHEET 42 OF 50

DETAILS
CONDUIT AND TRAY SCHEDULE

E-236

CALCULATED/ DESIGNED BY	FK	DATE 2/06	REVISED BY	DATE REVISED
CHECKED BY	AB	2/06		

DESIGN OVERSIGHT
BEHZAD GOLEMOHAMMADI

STATE OF CALIFORNIA - DEPARTMENT OF TRANSPORTATION
Caltrans

LAST REVISION 00-00-00
DATE PLOTTED => 2/23/2010
TIME PLOTTED => 1:44:02 PM

FOR REDUCED PLANS ORIGINAL SCALE IS IN MILLIMETERS 0 20 40 60 80

DGN FILE =>t:\13103\ms\pse\OTO-Contract 1\CCO\Electrical\CCO-Final Routing\2010-02-24 Submittal\40120lua236r3.dgn
USERNAME =>llorico

CU 04251 | EA 0120L1

MARK	DATE	DESCRIPTIONS	REV	CK	CCO NO.
3	1/29/10	Revised cable from 1-3/C #16 to 1-4/C #6, from 1-2/C + gnd #6 to 1-3/C + gnd #6. Changed conduit 603 from size 78 to 103.	JH	EJL	Conductor Change/ Misc
2	7/31/09	Added cables to conduits 623 and 652. Changed cable size to conduits 613, 621, and 624.	RSB	EJL	Geotech Arrays
1	8/29/08	Added cable/ckts A-1006, A-1007 A-1008.	JH	EJL	Light Pipe

REVISIONS

CONTRACT CHANGE ORDER NO. 146
SHEET 43 OF 50

DIST	COUNTY	ROUTE	KILOMETER POST TOTAL PROJECT	SHEET No	TOTAL SHEETS
04	Ala	80	1.6/2.7	590 R3	643

REGISTERED ELECTRICAL ENGINEER 05/15/06 DATE

1-29-07
PLANS APPROVAL DATE

REGISTERED PROFESSIONAL ENGINEER JENS ERLINGSSON No. 8249 Exp. 9/30/08 ELECTRICAL STATE OF CALIFORNIA

PB POWER, Inc.
A Parsons Brinckerhoff Company
303 Second St., Suite 700N
San Francisco, CA 94107-1317

The State of California or its officers or agents shall not be responsible for the accuracy or completeness of electronic copies of this plan sheet.

To get to the Caltrans web site, go to: http://www.dot.ca.gov

REGISTERED PROFESSIONAL ENGINEER DAVID H. OTO No. 10699 Exp. 06/30/2011 ELECTRICAL STATE OF CALIFORNIA

REGISTERED PROFESSIONAL ENGINEER FADI WALIEDDINE No. 11465 Exp. 12/31/2009 ELECTRICAL STATE OF CALIFORNIA

CONDUIT DATA

MOLE SUBSTATION

Conduit No.	Reference	Size	Type	Total Fill (mm²)	Allowable Fill (mm²)	Cable Area (mm²)	Included Cable No.	Conductor Type
601	E-124	103	RGS conduit	0.00	3324.51	0.00	Pull Rope 1	Soft-Fiber Polyester
602	E-124	78	RGS conduit	0.00	1935.24	0.00	Pull Rope 1	Soft-Fiber Polyester
603	E-124	103	RGS conduit	0.00	3324.51	0.00	Pull Rope 1	Soft-Fiber Polyester
604	E-124	78	RGS conduit	0.00	1935.24	0.00	Pull Rope 1	Soft-Fiber Polyester
605	E-124	78	RGS conduit	0.00	1935.24	0.00	Pull Rope 1	Soft-Fiber Polyester
606	E-124	78	RGS conduit	0.00	1935.24	0.00	Pull Rope 1	Soft-Fiber Polyester
607	E-124	78	RGS conduit	0.00	1935.24	0.00	Pull Rope 1	Soft-Fiber Polyester
608	E-124	78	RGS conduit	1514.04	1935.24	1514.04	2711-A	3+1gnd, 350 kcmil, #1/0, 600 V, RHH/RHW
						0.00	Pull Rope 1	Soft-Fiber Polyester
609	E-124	78	RGS conduit	1514.04	1935.24	0.00	Pull Rope 1	Soft-Fiber Polyester
						1514.04	2711-B	3+1gnd, 350 kcmil, #1/0, 600 V, RHH/RHW
610	E-124	78	RGS conduit	1514.04	1935.24	1514.04	1711-A	3+1gnd, 350 kcmil, #1/0, 600 V, RHH/RHW
						0.00	Pull Rope 1	Soft-Fiber Polyester
611	E-124	78	RGS conduit	1514.04	1935.24	1514.04	1711-B	3+1gnd, 350 kcmil, #1/0, 600 V, RHH/RHW
						0.00	Pull Rope 1	Soft-Fiber Polyester
612	E-124	78	RGS conduit	0.00	1935.24	0.00	Pull Rope 1	Soft-Fiber Polyester
613	E-124	78	RGS conduit	1055.60	1499.81	527.18	1632	1-3/C+gnd #2, 600 V, EPR insulation
						527.18	1631	1-3/C+gnd #2, 600 V, EPR insulation
						0.00	Pull Rope 1	Soft-Fiber Polyester
614	E-124	78	RGS conduit	147.76	2564.19	147.76	1621	1-3/C+gnd #10, 600 V, EPR insulation
						0.00	Pull Rope 1	Soft-Fiber Polyester
615	E-124	78	RGS conduit	0.00	1935.24	0.00	Pull Rope 1	Soft-Fiber Polyester
616	E-124	78	RGS conduit	732.20	1499.81	366.10	1626	1-3/C+gnd #4, 600 V, EPR insulation
						366.10	1627	1-3/C+gnd #4, 600 V, EPR insulation
						0.00	Pull Rope 1	Soft-Fiber Polyester
617	E-124	78	RGS conduit	972.87	1935.24	324.29	S-1601	1-3/C+gnd #6, 600 V, EPR insulation
						0.00	Pull Rope 1	Soft-Fiber Polyester
						324.29	S-1602	1-3/C+gnd #6, 600 V, EPR insulation
						324.29	A-1005	1-3/C+gnd #6, 600 V, EPR insulation
618	E-124	78	RGS conduit	233.50	1499.81	116.75	1635	1-3/C+gnd #12, 600 V, EPR insulation
						116.75	1637	1-3/C+gnd #12, 600 V, EPR insulation
						0.00	Pull Rope 1	Soft-Fiber Polyester
619	E-124	78	RGS conduit	849.65	1935.24	0.00	Pull Rope 1	Soft-Fiber Polyester
						262.68	A-1006	1-3/C + gnd #8, 600 V, EPR insulation
						262.68	A-1007	1-3/C + gnd #8, 600 V, EPR insulation
						324.29	A-1008	1-3/C + gnd #6, 600 V, EPR insulation
620	E-124	78	RGS conduit	0.00	1935.24	0.00	Pull Rope 1	Soft-Fiber Polyester
621	E-124, E-151	41	RGS conduit	527.18	708.28	0.00	Pull Rope 1	Soft-Fiber Polyester
						527.18	1632	1-3/C+gnd #2, 600 V, EPR insulation
622	E-124, E-151	41	RGS conduit	469.06	534.55	0.00	Pull Rope 1	Soft-Fiber Polyester
						469.06	1632-1	4+1gnd #2, #6, 600 V, RHH/RHW insulation
623	E-124, E-151	78	RGS conduit	426.90	1935.24	0.00	Pull Rope 1	Soft-Fiber Polyester
						324.29	UP004-3	1-3/C+gnd #6, 600 V, EPR insulation
						102.61	UP004-8	1-2/C+gnd #12, 600 V, EPR insulation
624	E-124, E-151	53	RGS conduit	527.18	1165.23	0.00	Pull Rope 1	Soft-Fiber Polyester
						527.18	1631	1-3/C+gnd #2, 600 V, EPR insulation
625	E-124, E-151	41	RGS conduit	205.22	414.28	0.00	Pull Rope 1	Soft-Fiber Polyester
						205.22	1651-2	2-1/C #2, 600 V, RHH/RHW insulation
626	E-124	41	RGS conduit	205.22	414.28	205.22	1651-3	2-1/C #2, 600 V, RHH/RHW insulation
						0.00	Pull Rope 1	Soft-Fiber Polyester
627	E-124, E-151	103	RGS conduit	205.22	2576.49	205.22	1651-1	2-1/C #2, 600 V, RHH/RHW insulation
						0.00	Pull Rope 1	Soft-Fiber Polyester
628	E-124	78	RGS conduit	1514.04	1935.24	1514.04	1711-A	3+1gnd, 350 kcmil, #1/0, 600 V, RHH/RHW
						0.00	Pull Rope 1	Soft-Fiber Polyester
629	E-124	78	RGS conduit	1514.04	1935.24	0.00	Pull Rope 1	Soft-Fiber Polyester
						1514.04	1711-B	3+1gnd, 350 kcmil, #1/0, 600 V, RHH/RHW
630	E-124	78	RGS conduit	1514.04	1935.24	0.00	Pull Rope 1	Soft-Fiber Polyester
						1514.04	2711-A	3+1gnd, 350 kcmil, #1/0, 600 V, RHH/RHW
631	E-124	78	RGS conduit	1514.04	1935.24	1514.04	2711-B	3+1gnd, 350 kcmil, #1/0, 600 V, RHH/RHW
						0.00	Pull Rope 1	Soft-Fiber Polyester

CONDUIT DATA

MOLE SUBSTATION

Conduit No.	Reference	Size	Type	Total Fill (mm²)	Allowable Fill (mm²)	Cable Area (mm²)	Included Cable No.	Conductor Type
632	E-124	78	RGS conduit	1514.04	1935.24	1514.04	1707	3+1gnd, 350 kcmil, #1/0, 600 V, RHH/RHW
						0.00	Pull Rope 1	Soft-Fiber Polyester
637	E-124, E-151	53	RGS conduit	507.52	879.42	126.88	DPA-5/7	1-3/C #10, 600 V, EPR insulation
						126.88	DPA-2/4	1-3/C #10, 600 V, EPR insulation
						126.88	DPA-6/8	1-3/C #10, 600 V, EPR insulation
						0.00	Pull Rope 1	Soft-Fiber Polyester
						126.88	DPA-1/3	1-3/C #10, 600 V, EPR insulation
638	E-124	53	RGS conduit	253.76	681.55	0.00	Pull Rope 1	Soft-Fiber Polyester
						126.88	DPA-6/8	1-3/C #10, 600 V, EPR insulation
						126.88	DPA-2/4	1-3/C #10, 600 V, EPR insulation
639	E-124	53	RGS conduit	253.76	681.55	126.88	DPA-5/7	1-3/C #10, 600 V, EPR insulation
						126.88	DPA-1/3	1-3/C #10, 600 V, EPR insulation
						0.00	Pull Rope 1	Soft-Fiber Polyester
642	E-124, E-151	53	RGS conduit	469.06	879.42	0.00	Pull Rope 1	Soft-Fiber Polyester
						469.06	1631-1	4+1gnd #2, #6, 600 V, RHH/RHW insulation
647	E-124	78	RGS conduit	1514.04	1935.24	0.00	Pull Rope 1	Soft-Fiber Polyester
						1514.04	1707	3+1gnd, 350 kcmil, #1/0, 600 V, RHH/RHW
648	E-124	53	RGS conduit	186.11	681.55	0.00	Pull Rope 1	Soft-Fiber Polyester
						116.75	1707-1	1-3/C #1, 600 V, EPR insulation
						69.36	1707-2	1-4/C #16 with overall shield, 600 V, FR-EP insulation, CPE jacket
649	E-124	53	RGS conduit	147.76	1165.23	147.76	1621	1-3/C+gnd #10 ,600 V, EPR insulation
						0.00	Pull Rope 1	Soft-Fiber Polyester
650	E-124	53	RGS conduit	147.76	1165.23	147.76	1621-1	1-3/C+gnd #10 ,600 V, EPR insulation
						0.00	Pull Rope 1	Soft-Fiber Polyester
651	E-124, E-151	103	RGS conduit	2403.42	2576.49	1201.71	2473-27	50 pair #18, shielded pairs, IS/OS shield 600 V, XLPE insul., PVC jacket
						1201.71	1473-26	50 pair #18, shielded pairs, IS/OS shield 600 V, XLPE insul., PVC jacket
						0.00	Pull Rope 1	Soft-Fiber Polyester
652	E-124, E-151	103	RGS conduit	121.74	3324.51	0.00	Pull Rope 1	Soft-Fiber Polyester
						121.74	2507-3	4 pair #22, shielded pairs, 300 V, PE insulation (ISON cable)
653	E-124, E-151	103	RGS conduit	2403.42	2576.49	1201.71	2474-27	50 pair #18, shielded pairs, IS/OS shield 600 V, XLPE insul., PVC jacket
						1201.71	1474-26	50 pair #18, shielded pairs, IS/OS shield 600 V, XLPE insul., PVC jacket
						0.00	Pull Rope 1	Soft-Fiber Polyester
654	E-124, E-151	103	RGS conduit	0.00	3324.51	0.00	Pull Rope 1	Soft-Fiber Polyester
655	E-124	53	RGS conduit	69.36	1165.23	0.00	Pull Rope 1	Soft-Fiber Polyester
						69.36	1621-2	1-4/C #16 with overall shield, 600 V, FR-EP insulation, CPE jacket
656	E-124, E-151	41	RGS conduit	196.20	414.28	98.10	1804	1 - 2 pair, shielded #18 with IS/OA, 600 V, PVC
						0.00	Pull Rope 1	Soft-Fiber Polyester
						98.10	1803	1 - 2 pair, shielded #18 with IS/OA, 600 V, PVC
657	E-124, E-151	53	RGS conduit	0.00	879.42	0.00	Pull Rope 1	Soft-Fiber Polyester
701	E-124	78	RGS conduit	0.00	1935.24	0.00	Pull Rope 1	Soft-Fiber Polyester

For continuation, see next sheet.

DETAILS
CONDUIT AND TRAY SCHEDULE

E-237

STATE OF CALIFORNIA - DEPARTMENT OF TRANSPORTATION
Caltrans

DESIGN OVERSIGHT: BEHZAD GOLEMOHAMMADI

CALCULATED/DESIGNED BY: FK | DATE 2/06 | REVISED BY
CHECKED BY: AB | 2/06 | DATE REVISED

LAST REVISION 00-00-00 | DATE PLOTTED => 2/2/2010 | TIME PLOTTED => 1:49:10 PM

FOR REDUCED PLANS ORIGINAL SCALE IS IN MILLIMETERS 0 20 40 60 80

DGN FILE =>t:\13103\MS\pse\OTO-Contract 1\CCO\Electrical\CCO-Conductor change & misc\40120lud237r3.dgn
USERNAME =>fusco

CU 04251 | EA 0120L1

DIST	COUNTY	ROUTE	KILOMETER POST TOTAL PROJECT	SHEET No	TOTAL SHEETS
04	Ala	80	1.6/2.7	591 R1	643

REGISTERED ELECTRICAL ENGINEER 05/15/06 DATE

1-29-07
PLANS APPROVAL DATE

REGISTERED PROFESSIONAL ENGINEER JENS ERLINGSSON No. 8249 Exp. 9/30/08 ELECTRICAL STATE OF CALIFORNIA

PB POWER, Inc.
A Parsons Brinckerhoff Company
303 Second St., Suite 700N
San Francisco, CA 94107-1317

The State of California or its officers or agents shall not be responsible for the accuracy or completeness of electronic copies of this plan sheet.

To get to the Caltrans web site, go to: http://www.dot.ca.gov

Caltrans Metric

CONDUIT DATA

MOLE SUBSTATION

Conduit No.	Reference	Size	Type	Total Fill (mm²)	Allowable Fill (mm²)	Cable Area (mm²)	Included Cable No.	Conductor Type
702	E-124	78	RGS conduit	496.21	1935.24	137.01	2711-2	1-7/C #14, 600 V, EPR insulation
						85.18	2711-10	1-3/C #14, 600 V, EPR insulation
						137.01	2711-1	1-7/C #14, 600 V, EPR insulation
						0.00	Pull Rope 1	Soft-Fiber Polyester
						137.01	2711-3	1-7/C #14, 600 V, EPR insulation
703	E-124	78	RGS conduit	208.08	1935.24	69.36	2711-14	1- 4/C #16 with overall shield, 600 V, FR-EP insulation, CPE jacket
						69.36	2711-14A	1- 4/C #16 with overall shield, 600 V, FR-EP insulation, CPE jacket
				1		69.36	2711-14B	1- 4/C #16 with overall shield, 600 V, FR-EP insulation, CPE jacket
						0.00	Pull Rope 1	Soft-Fiber Polyester
704	E-124	78	RGS conduit	208.08	1935.24	69.36	2711-13	1- 4/C #16 with overall shield, 600 V, FR-EP insulation, CPE jacket
						69.36	2711-13A	1- 4/C #16 with overall shield, 600 V, FR-EP insulation, CPE jacket
				1		69.36	2711-13B	1- 4/C #16 with overall shield, 600 V, FR-EP insulation, CPE jacket
						0.00	Pull Rope 1	Soft-Fiber Polyester
705	E-124	78	RGS conduit	208.08	1935.24	69.36	2711-12	1- 4/C #16 with overall shield, 600 V, FR-EP insulation, CPE jacket
						69.36	2711-12A	1- 4/C #16 with overall shield, 600 V, FR-EP insulation, CPE jacket
				1		69.36	2711-12B	1- 4/C #16 with overall shield, 600 V, FR-EP insulation, CPE jacket
						0.00	Pull Rope 1	Soft-Fiber Polyester
706	E-124	78	RGS conduit	0.00	1935.24	0.00	Pull Rope 1	Soft-Fiber Polyester
707	E-124	78	RGS conduit	451.71	1935.24	69.36	2711-11	1- 4/C #16 with overall shield, 600 V, FR-EP insulation, CPE jacket
						69.36	2711-11A	1- 4/C #16 with overall shield, 600 V, FR-EP insulation, CPE jacket
				1		69.36	2711-11B	1- 4/C #16 with overall shield, 600 V, FR-EP insulation, CPE jacket
						0.00	Pull Rope 1	Soft-Fiber Polyester
						126.88	UP004-12	1-2/C + gnd #10, 600 V, EPR insulation
708	E-124	78	RGS conduit	451.71	1935.24	69.36	1711-11	1- 4/C #16 with overall shield, 600 V, FR-EP insulation, CPE jacket
						69.36	1711-11A	1- 4/C #16 with overall shield, 600 V, FR-EP insulation, CPE jacket
				1		69.36	1711-11B	1- 4/C #16 with overall shield, 600 V, FR-EP insulation, CPE jacket
						116.75	1634	1-3/C + gnd #12, 600 V, EPR insulation
						0.00	Pull Rope 1	Soft-Fiber Polyester
						126.88	UP004-10	1-2/C + gnd #10, 600 V, EPR insulation
709	E-124	78	RGS conduit	208.08	1935.24	69.36	1711-12	1- 4/C #16 with overall shield, 600 V, FR-EP insulation, CPE jacket
						69.36	1711-12A	1- 4/C #16 with overall shield, 600 V, FR-EP insulation, CPE jacket
				1		69.36	1711-12B	1- 4/C #16 with overall shield, 600 V, FR-EP insulation, CPE jacket
						0.00	Pull Rope 1	Soft-Fiber Polyester
710	E-124	78	RGS conduit	208.08	1935.24	69.36	1711-13	1- 4/C #16 with overall shield, 600 V, FR-EP insulation, CPE jacket
						69.36	1711-13A	1- 4/C #16 with overall shield, 600 V, FR-EP insulation, CPE jacket
				1		69.36	1711-13B	1- 4/C #16 with overall shield, 600 V, FR-EP insulation, CPE jacket
						0.00	Pull Rope 1	Soft-Fiber Polyester
711	E-124	78	RGS conduit	208.08	1935.24	69.36	1711-14	1- 4/C #16 with overall shield, 600 V, FR-EP insulation, CPE jacket
						69.36	1711-14A	1- 4/C #16 with overall shield, 600 V, FR-EP insulation, CPE jacket
				1		69.36	1711-14B	1- 4/C #16 with overall shield, 600 V, FR-EP insulation, CPE jacket
						0.00	Pull Rope 1	Soft-Fiber Polyester
712	E-124	78	RGS conduit	0.00	1935.24	0.00	Pull Rope 1	Soft-Fiber Polyester
713	E-124	78	RGS conduit	496.21	1935.24	137.01	1711-3	1-7/C #14, 600 V, EPR insulation
						85.18	1711-10	1-3/C #14, 600 V, EPR insulation
						0.00	Pull Rope 1	Soft-Fiber Polyester
						137.01	1711-1	1-7/C #14, 600 V, EPR insulation
						137.01	1711-2	1-7/C #14, 600 V, EPR insulation
714	E-124	78	RGS conduit	1199.30	1935.24	85.18	1472	1-3/C #14, 600 V, EPR insulation
						69.36	1621-2	1- 4/C #16 with overall shield, 600 V, FR-EP insulation, CPE jacket
				1		142.33	1701-2	1-5/C #12, 600 V, EPR insulation
					1	69.36	1701-3	1- 4/C #16 with overall shield, 600 V, FR-EP insulation, CPE jacket
						69.36	1701-3A	1- 4/C #16 with overall shield, 600 V, FR-EP insulation, CPE jacket
						69.36	1701-3B	1- 4/C #16 with overall shield, 600 V, FR-EP insulation, CPE jacket
					1	142.33	1702-2	1-5/C #12, 600 V, EPR insulation
						69.36	1702-3	1- 4/C #16 with overall shield, 600 V, FR-EP insulation, CPE jacket

CONDUIT DATA

MOLE SUBSTATION

Conduit No.	Reference	Size	Type	Total Fill (mm²)	Allowable Fill (mm²)	Cable Area (mm²)	Included Cable No.	Conductor Type
714 (Cont'd)	E-124	78	RGS conduit	1199.30	1935.24	69.36	1702-3A	1- 4/C #16 with overall shield, 600 V, FR-EP insulation, CPE jacket
				1		69.36	1702-3B	1- 4/C #16 with overall shield, 600 V, FR-EP insulation, CPE jacket
						69.36	1702-5	1- 4/C #16 with overall shield, 600 V, FR-EP insulation, CPE jacket
						69.36	1706-2	1- 4/C #16 with overall shield, 600 V, FR-EP insulation, CPE jacket
						0.00	Pull Rope 1	Soft-Fiber Polyester
						102.61	UP004-11	1-2/C+ gnd #12, 600 V, EPR insulation
						102.61	UP004-9	1-2/C+ gnd #12, 600 V, EPR insulation
715	E-124	78	RGS conduit	1755.52	1935.24	142.33	1703-2	1-5/C #12, 600 V, EPR insulation
						69.36	1703-3	1- 4/C #16 with overall shield, 600 V, FR-EP insulation, CPE jacket
				1		69.36	1703-3A	1- 4/C #16 with overall shield, 600 V, FR-EP insulation, CPE jacket
						69.36	1703-3B	1- 4/C #16 with overall shield, 600 V, FR-EP insulation, CPE jacket
						142.33	1704-2	1-5/C #12, 600 V, EPR insulation
						69.36	1704-3	1- 4/C #16 with overall shield, 600 V, FR-EP insulation, CPE jacket
					1	69.36	1704-3A	1- 4/C #16 with overall shield, 600 V, FR-EP insulation, CPE jacket
						69.36	1704-3B	1- 4/C #16 with overall shield, 600 V, FR-EP insulation, CPE jacket
						142.33	1705-2	1-5/C #12, 600 V, EPR insulation
						69.36	1705-3	1- 4/C #16 with overall shield, 600 V, FR-EP insulation, CPE jacket
					1	69.36	1705-3A	1- 4/C #16 with overall shield, 600 V, FR-EP insulation, CPE jacket
						69.36	1705-3B	1- 4/C #16 with overall shield, 600 V, FR-EP insulation, CPE jacket
						137.01	1711-1	1-7/C #14, 600 V, EPR insulation
						85.18	1711-10	1-3/C #14, 600 V, EPR insulation
						69.36	1711-11	1- 4/C #16 with overall shield, 600 V, FR-EP insulation, CPE jacket
					1	69.36	1711-11A	1- 4/C #16 with overall shield, 600 V, FR-EP insulation, CPE jacket
						69.36	1711-11B	1- 4/C #16 with overall shield, 600 V, FR-EP insulation, CPE jacket
						137.01	1711-2	1-7/C #14, 600 V, EPR insulation
						137.01	1711-3	1-7/C #14, 600 V, EPR insulation
						0.00	Pull Rope 1	Soft-Fiber Polyester

For continuation, see next sheet.

REGISTERED PROFESSIONAL ENGINEER DAVID H. OTO No. 10699 Exp. 06/30/2011 ELECTRICAL STATE OF CALIFORNIA

MARK	DATE	DESCRIPTIONS	REV	CK	CCO No.
1	1/29/10	Revised cable from 1-3/C #16 to 1-4/C #16, from 1-9/C #16 to 3-4/C #16, 1-12/C #16 to 3-4/C #16. Revised cable routed inside conduit 708 and 709.	JR	EJL	Conductor Change/ Misc

REVISIONS

CONTRACT CHANGE ORDER NO. 146
SHEET 44 OF 50

DETAILS
CONDUIT AND TRAY SCHEDULE (SHEET 1)

E-238

STATE OF CALIFORNIA - DEPARTMENT OF TRANSPORTATION
Caltrans

DESIGN OVERSIGHT: BEHZAD GOLEMOHAMMADI

CALCULATED/DESIGNED BY: FK — CHECKED BY: AB — DATE: 2/06 — REVISED BY: 2/06 — DATE REVISED:

LAST REVISION 00-00-00 — DATE PLOTTED => 2/2/2010 — TIME PLOTTED => 1:48:25 PM

FOR REDUCED PLANS ORIGINAL SCALE IS IN MILLIMETERS 0 20 40 60 80

DGN FILE =>t:\13103\MS\pse\OTD-Contract 1\CCO\Electrical\CCO-Conductor change & misc\401201uq23Br1.dgn
USERNAME =>fusco

CU 04251 | EA 0120L1

DIST	COUNTY	ROUTE	KILOMETER POST TOTAL PROJECT	SHEET NO	TOTAL SHEETS
04	Ala	80	1.6/2.7	591 R1	643

REGISTERED ELECTRICAL ENGINEER 05/15/06 DATE

1-29-07
PLANS APPROVAL DATE

REGISTERED PROFESSIONAL ENGINEER JENS ERLINGSSON No. 8249 Exp. 9/30/08 ELECTRICAL STATE OF CALIFORNIA

PB POWER, Inc.
A Parsons Brinckerhoff Company
303 Second St., Suite 700N
San Francisco, CA 94107-1317

The State of California or its officers or agents shall not be responsible for the accuracy or completeness of electronic copies of this plan sheet.

To get to the Caltrans web site, go to: http://www.dot.ca.gov

Caltrans Metric

CONDUIT DATA

MOLE SUBSTATION

Conduit No.	Reference	Size	Type	Total Fill (mm²)	Allowable Fill (mm²)	Cable Area (mm²)	Included Cable No.	Conductor Type
716	E-124	78	RGS conduit	1365.23	1935.24	69.36	1634-4	1- 4/C #16 with overall shield, 600 V, FR-EP insulation, CPE jacket
						69.36	1650-1	1- 4/C #16 with overall shield, 600 V, FR-EP insulation, CPE jacket
						69.36	1651-4	1- 4/C #16 with overall shield, 600 V, FR-EP insulation, CPE jacket
					1	69.36	1652-1	1- 4/C #16 with overall shield, 600 V, FR-EP insulation, CPE jacket
						69.36	1653-1	1- 4/C #16 with overall shield, 600 V, FR-EP insulation, CPE jacket
						69.36	1654-1	1- 4/C #16 with overall shield, 600 V, FR-EP insulation, CPE jacket
						69.36	1656-1	1- 4/C #16 with overall shield, 600 V, FR-EP insulation, CPE jacket
						69.36	1656-2	1- 4/C #16 with overall shield, 600 V, FR-EP insulation, CPE jacket
						116.75	1707-1	1-5/C #14, 600 V, EPR insulation
						69.36	1707-2	1- 4/C #16 with overall shield, 600 V, FR-EP insulation, CPE jacket
						69.36	1711-12	1- 4/C #16 with overall shield, 600 V, FR-EP insulation, CPE jacket
					1	69.36	1711-12A	1- 4/C #16 with overall shield, 600 V, FR-EP insulation, CPE jacket
						69.36	1711-12B	1- 4/C #16 with overall shield, 600 V, FR-EP insulation, CPE jacket
						69.36	1711-13	1- 4/C #16 with overall shield, 600 V, FR-EP insulation, CPE jacket
						69.36	1711-13A	1- 4/C #16 with overall shield, 600 V, FR-EP insulation, CPE jacket
						69.36	1711-13B	1- 4/C #16 with overall shield, 600 V, FR-EP insulation, CPE jacket
						69.36	1711-14	1- 4/C #16 with overall shield, 600 V, FR-EP insulation, CPE jacket
						69.36	1711-14A	1- 4/C #16 with overall shield, 600 V, FR-EP insulation, CPE jacket
						69.36	1711-14B	1- 4/C #16 with overall shield, 600 V, FR-EP insulation, CPE jacket
						0.00	Pull Rope 1	Soft-Fiber Polyester
717	E-124	78	RGS conduit	1328.53	1935.24	137.01	2711-1	1-7/C #14, 600 V, EPR insulation
						85.18	2711-10	1-3/C #14, 600 V, EPR insulation
						69.36	2711-11	1- 4/C #16 with overall shield, 600 V, FR-EP insulation, CPE jacket
						69.36	2711-11A	1- 4/C #16 with overall shield, 600 V, FR-EP insulation, CPE jacket
						69.36	2711-11B	1- 4/C #16 with overall shield, 600 V, FR-EP insulation, CPE jacket
						69.36	2711-12	1- 4/C #16 with overall shield, 600 V, FR-EP insulation, CPE jacket
						69.36	2711-12A	1- 4/C #16 with overall shield, 600 V, FR-EP insulation, CPE jacket
						69.36	2711-12B	1- 4/C #16 with overall shield, 600 V, FR-EP insulation, CPE jacket
						69.36	2711-13	1- 4/C #16 with overall shield, 600 V, FR-EP insulation, CPE jacket
						69.36	2711-13A	1- 4/C #16 with overall shield, 600 V, FR-EP insulation, CPE jacket
					1	69.36	2711-13B	1- 4/C #16 with overall shield, 600 V, FR-EP insulation, CPE jacket
						69.36	2711-14	1- 4/C #16 with overall shield, 600 V, FR-EP insulation, CPE jacket
						69.36	2711-14A	1- 4/C #16 with overall shield, 600 V, FR-EP insulation, CPE jacket
						69.36	2711-14B	1- 4/C #16 with overall shield, 600 V, FR-EP insulation, CPE jacket
						137.01	2711-2	1-7/C #14, 600 V, EPR insulation
						137.01	2711-3	1-7/C #14, 600 V, EPR insulation
						0.00	Pull Rope 1	Soft-Fiber Polyester
718	E-124	78	RGS conduit	350.41	1935.24	142.33	1702-2	1-5/C #12, 600 V, EPR insulation
				1		69.36	1702-3	1- 4/C #16 with overall shield, 600 V, FR-EP insulation, CPE jacket
						69.36	1702-3A	1- 4/C #16 with overall shield, 600 V, FR-EP insulation, CPE jacket
						69.36	1702-3B	1- 4/C #16 with overall shield, 600 V, FR-EP insulation, CPE jacket
						0.00	Pull Rope 1	Soft-Fiber Polyester
719	E-124	78	RGS conduit	700.82	1935.24	142.33	1703-2	1-5/C #12, 600 V, EPR insulation
				1		69.36	1703-3	1- 4/C #16 with overall shield, 600 V, FR-EP insulation, CPE jacket
						69.36	1703-3A	1- 4/C #16 with overall shield, 600 V, FR-EP insulation, CPE jacket
						69.36	1703-3B	1- 4/C #16 with overall shield, 600 V, FR-EP insulation, CPE jacket
						142.33	1705-2	1-5/C #12, 600 V, EPR insulation
						69.36	1705-3	1- 4/C #16 with overall shield, 600 V, FR-EP insulation, CPE jacket
						69.36	1705-3A	1- 4/C #16 with overall shield, 600 V, FR-EP insulation, CPE jacket
						69.36	1705-3B	1- 4/C #16 with overall shield, 600 V, FR-EP insulation, CPE jacket
						0.00	Pull Rope 1	Soft-Fiber Polyester

CONDUIT DATA

MOLE SUBSTATION

Conduit No.	Reference	Size	Type	Total Fill (mm²)	Allowable Fill (mm²)	Cable Area (mm²)	Included Cable No.	Conductor Type
720	E-124	78	RGS conduit	350.41	1935.24	142.33	1704-2	1-5/C #12, 600 V, EPR insulation
				1		69.36	1704-3	1- 4/C #16 with overall shield, 600 V, FR-EP insulation, CPE jacket
						69.36	1704-3A	1- 4/C #16 with overall shield, 600 V, FR-EP insulation, CPE jacket
						69.36	1704-3B	1- 4/C #16 with overall shield, 600 V, FR-EP insulation, CPE jacket
						0.00	Pull Rope 1	Soft-Fiber Polyester
721	E-124	78	RGS conduit	477.29	1935.24	142.33	1701-2	1-5/C #12, 600 V, EPR insulation
				1		69.36	1701-3	1- 4/C #16 with overall shield, 600 V, FR-EP insulation, CPE jacket
						69.36	1701-3A	1- 4/C #16 with overall shield, 600 V, FR-EP insulation, CPE jacket
						69.36	1701-3B	1- 4/C #16 with overall shield, 600 V, FR-EP insulation, CPE jacket
						0.00	Pull Rope 1	Soft-Fiber Polyester
						126.88	UP004-1	1-2/C + gnd #10, 600 V, EPR insulation
722	E-124	78	RGS conduit	196.24	1499.81	69.36	1702-5	1- 4/C #16 with overall shield, 600 V, FR-EP insulation, CPE jacket
				1		0.00	Pull Rope 1	Soft-Fiber Polyester
						126.88	UP004-4/6	1-2/C + gnd #10, 600 V, EPR insulation
723	E-124	27	RGS conduit	51.89	303.46	0.00	Pull Rope 1	Soft-Fiber Polyester
						51.89	1701-1	1 triad #16 with overall shield, 600 V, PVC jacket
724	E-124	53	RGS conduit	51.89	1165.23	0.00	Pull Rope 1	Soft-Fiber Polyester
						51.89	1706-1	1 triad #16 with overall shield, 600 V, PVC jacket
725	E-124	53	RGS conduit	675.62	879.42	1 51.89	1701-1	~~1 triad #16 with overall shield, 600 V, PVC jacket~~
				1		285.92	2474-25B	1 - 8 pair, shielded #18 with overall shield, 1
						0.00	Pull Rope 1	~~Soft-Fiber Polyester~~
						285.92	2474-25A	1 - 8 pair, shielded #18 with overall shield,
						1 51.89	1706-1	~~1 triad #16 with overall shield, 600 V, PVC jacket~~
726	E-124, E-151	78	RGS conduit	712.74	1935.24	126.88	UP004-4/6	1-2/C+gnd #10, 600 V, EPR insulation
						0.00	Pull Rope 1	Soft-Fiber Polyester
						102.61	UP004-11	1-2/C+gnd #12, 600 V, EPR insulation
						126.88	UP004-10	1-2/C+gnd #10, 600 V, EPR insulation
						126.88	UP004-1	1-2/C+gnd #10, 600 V, EPR insulation
						102.61	UP004-9	1-2/C+gnd #12, 600V, EPR insulation
						126.88	UP004-12	1-2/C+gnd #10, 600 V, EPR insulation
						0.00	Pull Rope 1	Soft-Fiber Polyester
727	E-124, E-151	53	RGS conduit	571.84	681.55	285.92	2474-25B	1 - 8 pair, shielded #18 with overall shield,
				1	1	285.92	2474-25A	1 - 8 pair, shielded #18 with overall shield,
728	E-124	53	RGS conduit	623.73	879.42	285.92	2474-25B	1 - 8 pair, shielded #18 with overall shield,
				1		285.92	2474-25A	1 - 8 pair, shielded #18 with overall shield,
						0.00	Pull Rope 1	Soft-Fiber Polyester
						51.89	1701-1	1 triad #16 with overall shield, 600 V, PVC jacket

For continuation, see next sheet.

REGISTERED PROFESSIONAL ENGINEER DAVID H. OTO No. 10699 Exp. 06/30/2011 ELECTRICAL STATE OF CALIFORNIA

MARK	DATE	DESCRIPTIONS	REV	CK	CCO No.
1	1/29/10	Continuation from E-238 (sheet 1) Revised cable from 1-3/C #16 to 1-4/C #16, from 1-9/C #16 to 3-4/C #16, 1-12/C #16 to 3-4/C #16, from 1-6 pair to 1-8 pair.	JH	EJL	Conductor Change/ Misc

REVISIONS

CONTRACT CHANGE ORDER NO. 146
SHEET 45 OF 50

DETAILS
CONDUIT AND TRAY SCHEDULE (SHEET 2)

E-238.1

STATE OF CALIFORNIA - DEPARTMENT OF TRANSPORTATION
Caltrans

DESIGN OVERSIGHT
BEHZAD GOLEMOHAMMADI

CALCULATED/ DESIGNED BY	FK	DATE 2/06	REVISED BY
CHECKED BY	AB	2/06	DATE REVISED

LAST REVISION 00-00-00
DATE PLOTTED => 2/2/2010
TIME PLOTTED => 1:48:39 PM

FOR REDUCED PLANS ORIGINAL SCALE IS IN MILLIMETERS 0 20 40 60 80

DGN FILE =>t:\13103\MS\pse\OTO-Contract 1\CCO\Electrical\CCO-Conductor change & misc\401201ud238.1r1.dgn
USERNAME =>fusco

CU 04251 | EA 0120L1

DIST	COUNTY	ROUTE	KILOMETER POST TOTAL PROJECT	SHEET No	TOTAL SHEETS
04	Ala	80	1.6/2.7	592 R4	643

REGISTERED ELECTRICAL ENGINEER 05/15/06 DATE

1-29-07
PLANS APPROVAL DATE

PB POWER, Inc.
A Parsons Brinckerhoff Company
303 Second St., Suite 700N
San Francisco, CA 94107-1317

The State of California or its officers or agents shall not be responsible for the accuracy or completeness of electronic copies of this plan sheet.

To get to the Caltrans web site, go to http://www.dot.ca.gov

REGISTERED PROFESSIONAL ENGINEER FADI WALIEDDINE No. 11485 Exp. 12/31/2009 ELECTRICAL STATE OF CALIFORNIA

REGISTERED PROFESSIONAL ENGINEER DAVID H. OTO No. 10699 Exp. 06/30/2011 ELECTRICAL STATE OF CALIFORNIA

REGISTERED PROFESSIONAL ENGINEER JENS ERLINGSSON No. 8249 Exp. 9/30/08 ELECTRICAL STATE OF CALIFORNIA

Caltrans Metric

NOTES:

1. Circuits 1707, 1711-A, 1711-B, 2711-A and 2711-B routed inside cable trays shall be arranged in one level. No other cables shall be placed on them.

CONDUIT DATA

MOLE SUBSTATION

Conduit No.	Reference	Size	Type	Total Fill (mm²)	Allowable Fill (mm²)	Cable Area (mm²)	Included Cable No.	Conductor Type
731	E-124, E-151	103	RGS conduit	393.65	2576.49	0.00	Pull Rope 1	Soft-Fiber Polyester
						69.36	1651-4	1-4/C #16, 600 V, EPR insulation
						324.29	UP004-3	1-3/C+gnd #6, 600 V, EPR insulation △3
734	E-124	78	RGS conduit △2	69.36	2564.19	0.00	Pull Rope 1	Soft-Fiber Polyester
						△3 69.36	1706-2	1-4/C #16, 600 V, EPR insulation △3
735	E-124	53	RGS conduit	69.36 △3	1165.23	0.00	Pull Rope 1	Soft-Fiber Polyester
						69.36	2507-16	1-4/C #16, 600 V, EPR insulation △3
737	E-124	53	RGS conduit	0.00	879.42	△3 0.00	Pull Rope 1	Soft-Fiber Polyester
738	E-124	78	RGS conduit	0.00 △4	1935.24	~~102.61~~	~~UP004-9~~	~~1-2/C+gnd #12, 600 V, EPR insulation~~
						~~102.61~~	~~UP004-11~~	~~1-2/C+gnd #12, 600 V, EPR insulation~~
						~~0.00~~	~~Pull Rope 1~~	~~Soft-Fiber Polyester~~
						~~102.61~~	~~UP004-1~~	~~1-2/C+gnd #12, 600 V, EPR insulation~~
T20	E-124	610	152 mm siderail ladder tray	7496.49 △2 △3	16674.16	85.18	1472	1-3/C #14, 600 V, EPR insulation
						147.76	1621	1-3/C + gnd #10, 600 V, EPR insulation
						116.75	1637	1-3/C + gnd #12, 600 V, EPR insulation
						1514.04	1707	3 + 1 gnd, 350 kcmil, #1/0, 600 V, RHH/RHW insulation
						69.36	1621-2	1- 4/C #16 with overall shield, 600 V, FR-EP insulation, CPE jacket
						69.36	1634-4	1- 4/C #16 with overall shield, 600 V, FR-EP insulation, CPE jacket
						69.36	1650-1	1- 4/C #16 with overall shield, 600 V, FR-EP insulation, CPE jacket
						69.36	1651-4	1- 4/C #16 with overall shield, 600 V, FR-EP insulation, CPE jacket
						69.36	1652-1	1- 4/C #16 with overall shield, 600 V, FR-EP insulation, CPE jacket
						69.36	1653-1	1- 4/C #16 with overall shield, 600 V, FR-EP insulation, CPE jacket
						69.36	1654-1	1- 4/C #16 with overall shield, 600 V, FR-EP insulation, CPE jacket
						69.36	1656-1	1- 4/C #16 with overall shield, 600 V, FR-EP insulation, CPE jacket
						69.36	1656-2	1- 4/C #16 with overall shield, 600 V, FR-EP insulation, CPE jacket
						142.33	1701-2	1-5/C #12, 600 V, EPR insulation
						69.36	1701-3	1- 4/C #16 with overall shield, 600 V, FR-EP insulation, CPE jacket
						69.36	1701-3A	1- 4/C #16 with overall shield, 600 V, FR-EP insulation, CPE jacket
						69.36	1701-3B	1- 4/C #16 with overall shield, 600 V, FR-EP insulation, CPE jacket
						142.33	1702-2	1-5/C #12, 600 V, EPR insulation
						69.36	1702-3	1- 4/C #16 with overall shield, 600 V, FR-EP insulation, CPE jacket
						69.36	1702-3A	1- 4/C #16 with overall shield, 600 V, FR-EP insulation, CPE jacket
						69.36	1702-3B	1- 4/C #16 with overall shield, 600 V, FR-EP insulation, CPE jacket
						69.36	1702-5	1- 4/C #16 with overall shield, 600 V, FR-EP insulation, CPE jacket
						142.33	1703-2	1-5/C #12, 600 V, EPR insulation
						69.36	1703-3	1- 4/C #16 with overall shield, 600 V, FR-EP insulation, CPE jacket
						69.36	1703-3A	1- 4/C #16 with overall shield, 600 V, FR-EP insulation, CPE jacket
						69.36	1703-3B	1- 4/C #16 with overall shield, 600 V, FR-EP insulation, CPE jacket
						142.33	1704-2	1-5/C #12, 600 V, EPR insulation
						69.36	1704-3	1- 4/C #16 with overall shield, 600 V, FR-EP insulation, CPE jacket
						69.36	1704-3A	1- 4/C #16 with overall shield, 600 V, FR-EP insulation, CPE jacket
						69.36	1704-3B	1- 4/C #16 with overall shield, 600 V, FR-EP insulation, CPE jacket
						142.33	1705-2	1-5/C #12, 600 V, EPR insulation
						69.36	1705-3	1- 4/C #16 with overall shield, 600 V, FR-EP insulation, CPE jacket
						69.36	1705-3A	1- 4/C #16 with overall shield, 600 V, FR-EP insulation, CPE jacket
						69.36	1705-3B	1- 4/C #16 with overall shield, 600 V, FR-EP insulation, CPE jacket
						69.36	1706-2	1- 4/C #16 with overall shield, 600 V, FR-EP insulation, CPE jacket
						116.75	1707-1	1-5/C #14, 600 V, EPR insulation
						69.36	1707-2	1- 4/C #16 with overall shield, 600 V, FR-EP insulation, CPE jacket
						137.01	1711-1	1-7/C #14, 600 V, EPR insulation
						85.18	1711-10	1-3/C #14, 600 V, EPR insulation
						69.36	1711-11	1- 4/C #16 with overall shield, 600 V, FR-EP insulation, CPE jacket
						69.36	1711-11A	1- 4/C #16 with overall shield, 600 V, FR-EP insulation, CPE jacket
						69.36	1711-11B	1- 4/C #16 with overall shield, 600 V, FR-EP insulation, CPE jacket
						69.36	1711-12	1- 4/C #16 with overall shield, 600 V, FR-EP insulation, CPE jacket
						69.36	1711-12A	1- 4/C #16 with overall shield, 600 V, FR-EP insulation, CPE jacket
						69.36	1711-12B	1- 4/C #16 with overall shield, 600 V, FR-EP insulation, CPE jacket
						69.36	1711-13	1- 4/C #16 with overall shield, 600 V, FR-EP insulation, CPE jacket

CONDUIT DATA

MOLE SUBSTATION

Conduit No.	Reference	Size	Type	Total Fill (mm)	Allowable Fill (mm)	Cable Area (mm)	Included Cable No.	Conductor Type △3
T20 (Cont.)	E-124	610	152 mm siderail ladder tray	7496.49	16674.16	69.36	1711-13A	1- 4/C #16 with overall shield, 600 V, FR-EP insulation, CPE jacket
						69.36	1711-13B	1- 4/C #16 with overall shield, 600 V, FR-EP insulation, CPE jacket
						69.36	1711-14	1- 4/C #16 with overall shield, 600 V, FR-EP insulation, CPE jacket
						69.36	1711-14A	1- 4/C #16 with overall shield, 600 V, FR-EP insulation, CPE jacket
						69.36	1711-14B	1- 4/C #16 with overall shield, 600 V, FR-EP insulation, CPE jacket
						137.01	1711-2	1-7/C #14, 600 V, EPR insulation
						137.01	1711-3	1-7/C #14, 600 V, EPR insulation
						69.36	2507-16	1- 4/C #16 with overall shield, 600 V, FR-EP insulation, CPE jacket
						137.01	2711-1	1-7/C #14, 600 V, EPR insulation
						85.18	2711-10	1-3/C #14, 600 V, EPR insulation
							2711-11	1- 4/C #16 with overall shield, 600 V, FR-EP insulation, CPE jacket
						69.36	2711-11A	1- 4/C #16 with overall shield, 600 V, FR-EP insulation, CPE jacket
						69.36	2711-11B	1- 4/C #16 with overall shield, 600 V, FR-EP insulation, CPE jacket
						69.36	2711-12	1- 4/C #16 with overall shield, 600 V, FR-EP insulation, CPE jacket
						69.36	2711-12A	1- 4/C #16 with overall shield, 600 V, FR-EP insulation, CPE jacket
						69.36	2711-12B	1- 4/C #16 with overall shield, 600 V, FR-EP insulation, CPE jacket
						69.36	2711-13	1- 4/C #16 with overall shield, 600 V, FR-EP insulation, CPE jacket
						69.36	2711-13A	1- 4/C #16 with overall shield, 600 V, FR-EP insulation, CPE jacket
						69.36	2711-13B	1- 4/C #16 with overall shield, 600 V, FR-EP insulation, CPE jacket
						69.36	2711-14	1- 4/C #16 with overall shield, 600 V, FR-EP insulation, CPE jacket
						69.36	2711-14A	1- 4/C #16 with overall shield, 600 V, FR-EP insulation, CPE jacket
						69.36	2711-14B	1- 4/C #16 with overall shield, 600 V, FR-EP insulation, CPE jacket
						137.01	2711-2	1-7/C #14, 600 V, EPR insulation
						137.01	2711-3	1-7/C #14, 600 V, EPR insulation
						0.00	Pull Rope 1	Soft-Fiber Polyester
						102.61	UP004-11	1-2/C+ gnd #12, 600 V, EPR insulation
					△2	102.61	UP004-9	1-2/C+ gnd #12, 600 V, EPR insulation
T21	E-124	910	152 mm siderail ladder tray	11113.03 △3	25161.24	527.18	1631	1-3/C + gnd #2 ,600 V, EPR insulation
						527.18	1632	1-3/C + gnd #2 ,600 V, EPR insulation
						1514.04	1707	3 + 1 gnd, 350 kcmil, #1/0, 600 V, RHH/RHW insulation
						69.36	1634-4	1- 4/C #16 with overall shield, 600 V, FR-EP insulation, CPE jacket
						69.36	1651-4	1- 4/C #16 with overall shield, 600 V, FR-EP insulation, CPE jacket
						142.33	1701-2	1-5/C #12, 600 V, EPR insulation
						69.36	1701-3	1- 4/C #16 with overall shield, 600 V, FR-EP insulation, CPE jacket
						69.36	1701-3A	1- 4/C #16 with overall shield, 600 V, FR-EP insulation, CPE jacket

For continuation, see next sheet.

MARK	DATE	DESCRIPTIONS	REV	CK	CCO NO.
△4	2/24/10	Revised cable routed inside conduit 738.	JH	EJL	Final Routing & Misc
△3	1/29/10	Revised cable from 1-3/C #16 to 1-4/C #16, from 1-9/C #16 to 3-4/C #16, from 1-12/C #16 to 8-4/C #16, from 1-2/C + gnd #6 to 1-3/C + gnd #6.	JH	EJL	Conductor Change/ Misc.
△2	7/31/09	Added cables to conduits 735, T20, T21 and T24. Changed cable sizes to conduits T21, T22.	RSB	EJL	Geotech Arrays
△1	8/29/08	Added cable/ckts A-1006, A-1007, A-1008	JH	EJL	Light Pipe

REVISIONS

DETAILS
CONDUIT AND TRAY SCHEDULE (SHEET 1)

E-239

CONTRACT CHANGE ORDER NO. 146, SHEET 46 OF 50

STATE OF CALIFORNIA - DEPARTMENT OF TRANSPORTATION
Caltrans

DESIGN OVERSIGHT: BEHZAD GOLEMOHAMMADI

CALCULATED/DESIGNED BY: FK | DATE 2/06 | REVISED BY
CHECKED BY: AB | 2/06 | DATE REVISED

LAST REVISION 00-00-00 | DATE PLOTTED => 2/23/2010 | TIME PLOTTED => 1:44:17 PM

FOR REDUCED PLANS ORIGINAL SCALE IS IN MILLIMETERS 0 20 40 60 80

DGN FILE =>t:\13103\ms\pse\OTD-Contract 1\CCO\Electrical\CCO-Final Routing\2010-02-24 Submittal\40120lua239r4.dgn
USERNAME =>llorica

CU 04251 | EA 0120L1

DIST	COUNTY	ROUTE	KILOMETER POST TOTAL PROJECT	SHEET No	TOTAL SHEETS
04	Ala	80	1.6/2.7	592 R3	643

REGISTERED ELECTRICAL ENGINEER 05/15/06 DATE

1-29-07
PLANS APPROVAL DATE

REGISTERED PROFESSIONAL ENGINEER JENS ERLINGSSON No. 8249 Exp. 9/30/08 ELECTRICAL STATE OF CALIFORNIA

PB POWER, Inc.
A Parsons Brinckerhoff Company
303 Second St., Suite 700N
San Francisco, CA 94107-1317

The State of California or its officers or agents shall not be responsible for the accuracy or completeness of electronic copies of this plan sheet.

To get to the Caltrans web site, go to http://www.dot.ca.gov

Caltrans Metric

REGISTERED PROFESSIONAL ENGINEER FADI WALIEDDINE No. 11465 Exp. 12/31/2009 ELECTRICAL STATE OF CALIFORNIA

REGISTERED PROFESSIONAL ENGINEER DAVID H. OTO No. 10699 Exp. 06/30/2011 ELECTRICAL STATE OF CALIFORNIA

NOTES:

1. Circuits 1707, 1711-A, 1711-B, 2711-A and 2711-B routed inside cable trays shall be arranged in one level. No other cables shall be placed on them.

CONDUIT DATA

MOLE SUBSTATION

Conduit No.	Reference	Size	Type	Total Fill (mm²)	Allowable Fill (mm²)	Cable Area (mm²)	Included Cable No.	Conductor Type
T21 (Cont.)	E-124	910	152 mm siderail ladder tray	11113.03	25161.24	69.36	1701-3B	1- 4/C #16 with overall shield, 600 V, FR-EP insulation, CPE jacket
						142.33	1702-2	1-5/C #12, 600 V, EPR insulation
						69.36	1702-3	1- 4/C #16 with overall shield, 600 V, FR-EP insulation, CPE jacket
						69.36	1702-3A	1- 4/C #16 with overall shield, 600 V, FR-EP insulation, CPE jacket
						69.36	1702-3B	1- 4/C #16 with overall shield, 600 V, FR-EP insulation, CPE jacket
						69.36	1702-5	1- 4/C #16 with overall shield, 600 V, FR-EP insulation, CPE jacket
						142.33	1703-2	1-5/C #12, 600 V, EPR insulation
						69.36	1703-3	1- 4/C #16 with overall shield, 600 V, FR-EP insulation, CPE jacket
						69.36	1703-3A	1- 4/C #16 with overall shield, 600 V, FR-EP insulation, CPE jacket
						69.36	1703-3B	1- 4/C #16 with overall shield, 600 V, FR-EP insulation, CPE jacket
						142.33	1704-2	1-5/C #12, 600 V, EPR insulation
						69.36	1704-3	1- 4/C #16 with overall shield, 600 V, FR-EP insulation, CPE jacket
						69.36	1704-3A	1- 4/C #16 with overall shield, 600 V, FR-EP insulation, CPE jacket
						69.36	1704-3B	1- 4/C #16 with overall shield, 600 V, FR-EP insulation, CPE jacket
						142.33	1705-2	1-5/C #12, 600 V, EPR insulation
						69.36	1705-3	1- 4/C #16 with overall shield, 600 V, FR-EP insulation, CPE jacket
						69.36	1705-3A	1- 4/C #16 with overall shield, 600 V, FR-EP insulation, CPE jacket
						69.36	1705-3B	1- 4/C #16 with overall shield, 600 V, FR-EP insulation, CPE jacket
						69.36	1706-2	1- 4/C #16 with overall shield, 600 V, FR-EP insulation, CPE jacket
						1514.04	1711-A	3 + 1 gnd, 350 kcmil, #1/0, 600 V, RHH/RHW insulation
						1514.04	1711-B	3 + 1 gnd, 350 kcmil, #1/0, 600 V, RHH/RHW insulation
						1514.04	2711-A	3 + 1 gnd, 350 kcmil, #1/0, 600 V, RHH/RHW insulation
						1514.04	2711-B	3 + 1 gnd, 350 kcmil, #1/0, 600 V, RHH/RHW insulation
						0.00	Pull Rope 1	Soft-Fiber Polyester
						126.88	UP004-10	1-2/C + gnd #10, 600 V, EPR insulation
						102.61	UP004-11	1-2/C+ gnd #12, 600 V, EPR insulation
						126.88	UP004-12	1-2/C + gnd #10, 600 V, EPR insulation
						102.61	UP004-9	1-2/C+ gnd #12, 600 V, EPR insulation
T22	E-124	910	152 mm siderail ladder tray	12280.13	25161.24	85.18	1472	1-3/C #14, 600 V, EPR insulation
						147.76	1621	1-3/C + gnd #10, 600 V, EPR insulation
						366.10	1626	1-3/C + gnd #4, 600 V, EPR insulation
						366.10	1627	1-3/C + gnd #4, 600 V, EPR insulation
						527.18	1631	1-3/C + gnd #2 ,600 V, EPR insulation
						527.18	1632	1-3/C + gnd #2 ,600 V, EPR insulation
						116.75	1634	1-3/C + gnd #12, 600 V, EPR insulation
						116.75	1635	1-3/C + gnd #12, 600 V, EPR insulation
						116.75	1637	1-3/C + gnd #12, 600 V, EPR insulation
						69.36	1652-1	1- 4/C #16 with overall shield, 600 V, FR-EP insulation, CPE jacket
						69.36	1653-1	1- 4/C #16 with overall shield, 600 V, FR-EP insulation, CPE jacket
						69.36	1656-1	1- 4/C #16 with overall shield, 600 V, FR-EP insulation, CPE jacket
						69.36	1656-2	1- 4/C #16 with overall shield, 600 V, FR-EP insulation, CPE jacket
						1514.04	1711-A	3 + 1 gnd, 350 kcmil, #1/0, 600 V, RHH/RHW insulation
						1514.04	1711-B	3 + 1 gnd, 350 kcmil, #1/0, 600 V, RHH/RHW insulation
						69.36	2507-16	1- 4/C #16 with overall shield, 600 V, FR-EP insulation, CPE jacket
						137.01	2711-1	1-7/C #14, 600 V, EPR insulation
						85.18	2711-10	1-3/C #14, 600 V, EPR insulation
						69.36	2711-11	1- 4/C #16 with overall shield, 600 V, FR-EP insulation, CPE jacket
						69.36	2711-11A	1- 4/C #16 with overall shield, 600 V, FR-EP insulation, CPE jacket
						69.36	2711-11B	1- 4/C #16 with overall shield, 600 V, FR-EP insulation, CPE jacket
						69.36	2711-12	1- 4/C #16 with overall shield, 600 V, FR-EP insulation, CPE jacket
						69.36	2711-12A	1- 4/C #16 with overall shield, 600 V, FR-EP insulation, CPE jacket
						69.36	2711-12B	1- 4/C #16 with overall shield, 600 V, FR-EP insulation, CPE jacket
						69.36	2711-13	1- 4/C #16 with overall shield, 600 V, FR-EP insulation, CPE jacket
						69.36	2711-13A	1- 4/C #16 with overall shield, 600 V, FR-EP insulation, CPE jacket
						69.36	2711-13B	1- 4/C #16 with overall shield, 600 V, FR-EP insulation, CPE jacket
						69.36	2711-14	1- 4/C #16 with overall shield, 600 V, FR-EP insulation, CPE jacket
						69.36	2711-14A	1- 4/C #16 with overall shield, 600 V, FR-EP insulation, CPE jacket
						69.36	2711-14B	1- 4/C #16 with overall shield, 600 V, FR-EP insulation, CPE jacket

CONDUIT DATA

MOLE SUBSTATION

Conduit No.	Reference	Size	Type	Total Fill (mm²)	Allowable Fill (mm²)	Cable Area (mm²)	Included Cable No.	Conductor Type
T22 (Cont.)	E-124	910	152 mm siderail ladder tray	12280.13	25161.24	137.01	2711-2	1-7/C #14, 600 V, EPR insulation
						137.01	2711-3	1-7/C #14, 600 V, EPR insulation
						1514.04	2711-A	3 + 1 gnd, 350 kcmil, #1/0, 600 V, RHH/RHW insulation
						1514.04	2711-B	3 + 1 gnd, 350 kcmil, #1/0, 600 V, RHH/RHW insulation
						324.29	A-1005	1-3/C + gnd #6, 600 V, EPR insulation
						262.68	A-1006	1-3/C + gnd #8, 600 V, EPR insulation
						262.68	A-1007	1-3/C + gnd #8, 600 V, EPR insulation
						324.29	A-1008	1-3/C + gnd #6, 600 V, EPR insulation
						0.00	Pull Rope 1	Soft-Fiber Polyester
						324.29	S-1601	1-3/C + gnd #6, 600 V, EPR insulation
						324.29	S-1602	1-3/C + gnd #6, 600 V, EPR insulation
						126.88	UP004-10	1-2/C + gnd #10, 600 V, EPR insulation
						102.61	UP004-11	1-2/C+ gnd #12, 600 V, EPR insulation
						126.88	UP004-12	1-2/C + gnd #10, 600 V, EPR insulation
T23	E-124	610	152 mm siderail ladder tray	3220.20	16674.16	85.18	1472	1-3/C #14, 600 V, EPR insulation
						366.10	1626	1-3/C + gnd #4, 600 V, EPR insulation
						366.10	1627	1-3/C + gnd #4, 600 V, EPR insulation
						116.75	1634	1-3/C + gnd #12, 600 V, EPR insulation
						116.75	1635	1-3/C + gnd #12, 600 V, EPR insulation
						69.36	1652-1	1- 4/C #16 with overall shield, 600 V, FR-EP insulation, CPE jacket
						69.36	1653-1	1- 4/C #16 with overall shield, 600 V, FR-EP insulation, CPE jacket
						69.36	1656-1	1- 4/C #16 with overall shield, 600 V, FR-EP insulation, CPE jacket
						69.36	1656-2	1- 4/C #16 with overall shield, 600 V, FR-EP insulation, CPE jacket
						69.36	2507-16	1- 4/C #16 with overall shield, 600 V, FR-EP insulation, CPE jacket
						324.29	A-1005	1-3/C + gnd #6, 600 V, EPR insulation
						262.68	A-1006	1-3/C + gnd #8, 600 V, EPR insulation
						262.68	A-1007	1-3/C + gnd #8, 600 V, EPR insulation
						324.29	A-1008	1-3/C + gnd #6, 600 V, EPR insulation
						0.00	Pull Rope 1	Soft-Fiber Polyester
						324.29	S-1601	1-3/C + gnd #6, 600 V, EPR insulation
						324.29	S-1602	1-3/C + gnd #6, 600 V, EPR insulation
T24	E-124, E-150, E-151	610	152 mm siderail ladder tray	2865.41	16674.16	366.10	1626	1-3/C + gnd #4, 600 V, EPR insulation
						366.10	1627	1-3/C + gnd #4, 600 V, EPR insulation
						69.36	1656-1	1- 4/C #16 with overall shield, 600 V, FR-EP insulation, CPE jacket
						69.36	1656-2	1- 4/C #16 with overall shield, 600 V, FR-EP insulation, CPE jacket
						69.36	2507-16	1- 4/C #16 with overall shield, 600 V, FR-EP insulation, CPE jacket
						324.29	A-1005	1-3/C + gnd #6, 600 V, EPR insulation
						262.68	A-1006	1-3/C + gnd #8, 600 V, EPR insulation
						262.68	A-1007	1-3/C + gnd #8, 600 V, EPR insulation
						324.29	A-1008	1-3/C + gnd #6, 600 V, EPR insulation
						0.00	Pull Rope 1	Soft-Fiber Polyester
						324.29	S-1601	1-3/C + gnd #6, 600 V, EPR insulation
						324.29	S-1602	1-3/C + gnd #6, 600 V, EPR insulation
						102.61	UP004-8	1-2/C+ gnd #12, 600 V, EPR insulation

For continuation, see next sheet.

MARK	DATE	DESCRIPTIONS	REV	CK	CCO NO.
3	1/29/10	Continuation from E-239 (sheet 1) Revised cable from 1-3/C #16 to 1-4/C #16, from 1-9/C #16 to 3-4/C #16, from 1-12/C #16 to 8-4/C #16, from 1-2/C + gnd #6 to 1-3/C + gnd #6.	JH	EJL	Conductor Change/ Misc.
2	7/31/09	Added cables to conduits 735, T20, T21 and T24. Changed cable sizes to conduits T21, T22.	RSB	EJL	Geotech Arrays
1	8/29/08	Added cable/ckts A-1006, A-1007, A-1008	JH	EJL	Light Pipe

REVISIONS

CONTRACT CHANGE ORDER NO. 146
SHEET 47 OF 50

DETAILS
CONDUIT AND TRAY SCHEDULE (SHEET 2)

E-239.1

DESIGN OVERSIGHT	CALCULATED/ DESIGNED BY	CHECKED BY	DATE	REVISED BY	DATE	REVISED
BEHZAD GOLEMOHAMMADI	FK	AB	2/06			

STATE OF CALIFORNIA - DEPARTMENT OF TRANSPORTATION
Caltrans

FOR REDUCED PLANS ORIGINAL SCALE IS IN MILLIMETERS 0 20 40 60 80

DGN FILE =>T:\13103\MS\pse\OTO-Contract 1\CCO\Electrical\CCO-Conductor change & misc\40120lud239.1r3.dgn
USERNAME =>llorico

CU 04251 | EA 0120L1

DATE PLOTTED => 2/2/2010
TIME PLOTTED => 2:53:04 PM

LAST REVISION 00-00-00

DIST	COUNTY	ROUTE	KILOMETER POST TOTAL PROJECT	SHEET No	TOTAL SHEETS
04	Ala	80	1.6/2.7	593 R2	643

REGISTERED ELECTRICAL ENGINEER 05/15/06 DATE

1-29-07
PLANS APPROVAL DATE

REGISTERED PROFESSIONAL ENGINEER JENS ERLINGSSON No. 8249 Exp. 9/30/08 ELECTRICAL STATE OF CALIFORNIA

PB POWER, Inc.
A Parsons Brinckerhoff Company
303 Second St., Suite 700N
San Francisco, CA 94107-1317

The State of California or its officers or agents shall not be responsible for the accuracy or completeness of electronic copies of this plan sheet.

To get to the Caltrans web site, go to http://www.dot.ca.gov

Caltrans Metric

CONDUIT DATA

MOLE SUBSTATION

Conduit No	Reference	Size	Type	Total Fill (mm²)	Allowable Fill (mm²)	Cable Area (mm)	Included Cable No.	Conductor Type
T25	E-124, E-151	610	152 mm siderail ladder tray	4154.13	16674.16	527.18	1631	1-3/C + gnd #2 ,600 V, EPR insulation
						527.18	1632	1-3/C + gnd #2, 600 V, EPR insulation
						69.36	1634-4	1- 4/C #16 with overall shield, 600 V, FR-EP insulation, CPE jacket
						69.36	1651-4	1- 4/C #16 with overall shield, 600 V, FR-EP insulation, CPE jacket
						142.33	1701-2	1-5/C #12, 600 V, EPR insulation
						69.36	1701-3	1- 4/C #16 with overall shield, 600 V, FR-EP insulation, CPE jacket
						69.36	1701-3A	1- 4/C #16 with overall shield, 600 V, FR-EP insulation, CPE jacket
						69.36	1701-3B	1- 4/C #16 with overall shield, 600 V, FR-EP insulation, CPE jacket
						142.33	1702-2	1-5/C #12, 600 V, EPR insulation
						69.36	1702-3	1- 4/C #16 with overall shield, 600 V, FR-EP insulation, CPE jacket
						69.36	1702-3A	1- 4/C #16 with overall shield, 600 V, FR-EP insulation, CPE jacket
						69.36	1702-3B	1- 4/C #16 with overall shield, 600 V, FR-EP insulation, CPE jacket
						69.36	1702-5	1- 4/C #16 with overall shield, 600 V, FR-EP insulation, CPE jacket
						142.33	1703-2	1-5/C #12, 600 V, EPR insulation
						69.36	1703-3	1- 4/C #16 with overall shield, 600 V, FR-EP insulation, CPE jacket
						69.36	1703-3A	1- 4/C #16 with overall shield, 600 V, FR-EP insulation, CPE jacket
						69.36	1703-3B	1- 4/C #16 with overall shield, 600 V, FR-EP insulation, CPE jacket
						142.33	1704-2	1-5/C #12, 600 V, EPR insulation
						69.36	1704-3	1- 4/C #16 with overall shield, 600 V, FR-EP insulation, CPE jacket
						69.36	1704-3A	1- 4/C #16 with overall shield, 600 V, FR-EP insulation, CPE jacket
						69.36	1704-3B	1- 4/C #16 with overall shield, 600 V, FR-EP insulation, CPE jacket
						142.33	1705-2	1-5/C #12, 600 V, EPR insulation
						69.36	1705-3	1- 4/C #16 with overall shield, 600 V, FR-EP insulation, CPE jacket
						69.36	1705-3A	1- 4/C #16 with overall shield, 600 V, FR-EP insulation, CPE jacket
						69.36	1705-3B	1- 4/C #16 with overall shield, 600 V, FR-EP insulation, CPE jacket
						0.00	Pull Rope 1	Soft-Fiber Polyester
						126.88	UP004-1	1-2/C + gnd #10, 600 V, EPR insulation
						126.88	UP004-10	1-2/C + gnd #10, 600 V, EPR insulation
						102.61	UP004-11	1-2/C + gnd #12, 600 V, EPR insulation
						126.88	UP004-12	1-2/C + gnd #10, 600 V, EPR insulation
						324.29	UP004-3	1-3/C + gnd #6, 600 V, EPR insulation
						126.88	UP004-4/6	1-2/C + gnd #10, 600 V, EPR insulation
						102.61	UP004-8	1-2/C + gnd #12, 600 V, EPR insulation
						102.61	UP004-9	1-2/C + gnd #12, 600 V, EPR insulation
T26	E-124	610	152 mm siderail ladder tray	2055.99	16674.16	147.76	1621	1-3/C + gnd #10, 600 V, EPR insulation
						1514.04	1707	3 + 1 gnd, 350 kcmil, #1/0, 600 V, RHH/RHW insulation
						69.36	1621-2	1- 4/C #16 with overall shield, 600 V, FR-EP insulation, CPE jacket
						69.36	1650-1	1- 4/C #16 with overall shield, 600 V, FR-EP insulation, CPE jacket
						69.36	1654-1	1- 4/C #16 with overall shield, 600 V, FR-EP insulation, CPE jacket
						116.75	1707-1	1-5/C #14, 600 V, EPR insulation
						69.36	1707-2	1- 4/C #16 with overall shield, 600 V, FR-EP insulation, CPE jacket
						0.00	Pull Rope 1	Soft-Fiber Polyester
616A	E-124	78	RGS conduit	0.00	1935.24	0.00	Pull Rope 1	Soft-Fiber Polyester
623A	E-124, E-151	78	RGS conduit	0.00	1935.24	0.00	Pull Rope 1	Soft-Fiber Polyester
651A	E-124, E-151	103	RGS conduit	0.00	3324.51	0.00	Pull Rope 1	Soft-Fiber Polyester
701A	E-124	78	RGS conduit	0.00	1935.24	0.00	Pull Rope 1	Soft-Fiber Polyester
702A	E-124	78	RGS conduit	0.00	1935.24	0.00	Pull Rope 1	Soft-Fiber Polyester
703A	E-124	78	RGS conduit	0.00	1935.24	0.00	Pull Rope 1	Soft-Fiber Polyester
712A	E-124	78	RGS conduit	0.00	1935.24	0.00	Pull Rope 1	Soft-Fiber Polyester
713A	E-124	78	RGS conduit	0.00	1935.24	0.00	Pull Rope 1	Soft-Fiber Polyester
714A	E-124	78	RGS conduit	0.00	1935.24	0.00	Pull Rope 1	Soft-Fiber Polyester
721A	E-124	78	RGS conduit	0.00	1935.24	0.00	Pull Rope 1	Soft-Fiber Polyester

NOTES:

1. Circuits 1707, 1711-A, 1711-B, 2711-A and 2711-B routed inside cable trays shall be arranged in one level. No other cables shall be placed on them.

REGISTERED PROFESSIONAL ENGINEER DAVID H. OTO No. 10699 Exp. 06/30/2011 ELECTRICAL STATE OF CALIFORNIA

REGISTERED PROFESSIONAL ENGINEER FADI WALIEDDINE No. 11466 Exp. 12/31/2009 ELECTRICAL STATE OF CALIFORNIA

MARK	DATE	DESCRIPTIONS	REV	CK	CCO NO.
2	1/29/10	Revised cable from 1-3/C #16 to 1-4/C #16, from 1-9/C #16 to 3-4/C #16, from 1-12/C #16 to 3-4/C #16, from 1-2/C + gnd #6 to 1-3/C + gnd #6. Added conduit 616A, 623A, 651A, 701A, 702A, 703A, 712A, 713A, 714A, and 721A.	JH	EJL	Conductor Change/ Misc.
1	7/31/09	Added cable to conduit T25. Changed cable size to conduit T25.	RSB	EJL	Geotech Arrays

REVISIONS

CONTRACT CHANGE ORDER NO. 146
SHEET 48 OF 50

DETAILS
CONDUIT AND TRAY SCHEDULE

E-240

CALCULATED/ DESIGNED BY	DATE 2/06	REVISED BY	DATE REVISED
CHECKED BY	2/06	AB	

DESIGN OVERSIGHT
BEHZAD GOLEMOHAMMADI

STATE OF CALIFORNIA - DEPARTMENT OF TRANSPORTATION
Caltrans

LAST REVISION 00-00-00

DATE PLOTTED => 2/2/2010
TIME PLOTTED => 1:47:03 PM

FOR REDUCED PLANS ORIGINAL SCALE IS IN MILLIMETERS 0 20 40 60 80

DGN FILE =>t:\13103\MS\pse\OTD-Contract 1\CCO\Electrical\CCO-Conductor change & misc\40120luc240r2.dgn
USERNAME =>fusco

CU 04251 | EA 0120L1

DIST	COUNTY	ROUTE	KILOMETER POST TOTAL PROJECT	SHEET No	TOTAL SHEETS
04	Ala	80	1.6/2.7	594 R4	643

REGISTERED ELECTRICAL ENGINEER 05/15/06 DATE

1-29-07
PLANS APPROVAL DATE

REGISTERED PROFESSIONAL ENGINEER JENS ERLINGSSON No. 8249 Exp. 9/30/08 ELECTRICAL STATE OF CALIFORNIA

PB POWER, Inc.
A Parsons Brinckerhoff Company
303 Second St., Suite 700N
San Francisco, CA 94107-1317

The State of California or its officers or agents shall not be responsible for the accuracy or completeness of electronic copies of this plan sheet.

To get to the Caltrans web site, go to http://www.dot.ca.gov

CONDUIT DATA

STRONG MOTION DETECTION SYSTEM

Conduit No	Reference	Size	Type	Total Fill (mm²)	Allowable Fill (mm²)	Cable Area (mm²)	Included Cable No.	Conductor Type
9001	E-174, E-177	27	RGS conduit	0.00	229.03	0.00	Pull Rope 1	Soft-Fiber Polyester
9002	E-174, E-177	41	RGS conduit	0.00	534.55	0.00	Pull Rope 1	Soft-Fiber Polyester
9004	E-174	27	RGS conduit	0.00	229.03	0.00	Pull Rope 1	Soft-Fiber Polyester
9006	E-174	27	RGS conduit	0.00	229.03	0.00	Pull Rope 1	Soft-Fiber Polyester
9008	E-175, E-177	27	RGS conduit	0.00	229.03	0.00	Pull Rope 1	Soft-Fiber Polyester
9011	E-175, E-177	27	RGS conduit	0.00	229.03	0.00	Pull Rope 1	Soft-Fiber Polyester
9012	E-176, E-177	27	RGS conduit	0.00	229.03	0.00	Pull Rope 1	Soft-Fiber Polyester
9013	E-176, E-177	27	RGS conduit	0.00	229.03	0.00	Pull Rope 1	Soft-Fiber Polyester
9020	E-102, E-173A, E-179	27 △4	Liquidtight flex metal conduit	142.26	225.16	0.00	Pull Rope 1	Soft-Fiber Polyester
						47.42	2507-11A	4 pair #22, shielded pairs, FEP insulation (SSC)
						47.42	2507-11B	4 pair #22, shielded pairs, FEP insulation (SSC)
						47.42	2507-11C	4 pair #22, shielded pairs, FEP insulation (SSC)
9021	E-173A, E-179	41	RGS conduit	142.26	534.55	0.00	Pull Rope 1	Soft-Fiber Polyester
						47.42	2507-12A	4 pair #22, shielded pairs, FEP insulation (SSC)
						47.42	2507-12B	4 pair #22, shielded pairs, FEP insulation (SSC)
						47.42	250T-12C	4 pair #22, shielded pairs, FEP insulation (SSC)
9022	E-173A, E-179	41	RGS conduit	142.26	534.55	0.00	Pull Rope 1	Soft-Fiber Polyester
						47.42	2507-13A	4 pair #22, shielded pairs, FEP insulation (SSC)
						47.42	2507-13B	4 pair #22, shielded pairs, FEP insulation (SSC)
						47.42	2507-13C	4 pair #22, shielded pairs, FEP insulation (SSC)
9023	E-173A, E-179	41	RGS conduit	142.26	534.55	0.00	Pull Rope 1	Soft-Fiber Polyester
						47.42	2507-14A	4 pair #22, shielded pairs, FEP insulation (SSC)
						47.42	2507-14B	4 pair #22, shielded pairs, FEP insulation (SSC)
						47.42	2507-14C	4 pair #22, shielded pairs, FEP insulation (SSC)
9024	E-173A, E-179 △2	41	RGS conduit	142.26	534.55	0.00	Pull Rope 1	Soft-Fiber Polyester
						47.42	2507-15A	4 pair #22, shielded pairs, FEP insulation (SSC)
						47.42	2507-15B	4 pair #22, shielded pairs, FEP insulation (SSC)
						47.42	2507-15C	4 pair #22, shielded pairs, FEP insulation (SSC)
9025	E-174, E-175, E-60, E-61	103	RGS conduit	0.00	3324.51	0.00	Pull Rope 1	Soft-Fiber Polyester
9025A	E-61	103	RGS conduit	0.00	3324.51	0.00	Pull Rope 1	Soft-Fiber Polyester △1
9025B	E-61	103	RGS conduit	0.00	3324.51	0.00	Pull Rope 1	Soft-Fiber Polyester
9026	E-175, E-176, E-61, E-62	103	RGS conduit	0.00	3324.51	0.00	Pull Rope 1	Soft-Fiber Polyester
9027	E-176, E-62	103	RGS conduit	0.00	3324.51	0.00	Pull Rope 1	Soft-Fiber Polyester
9030	E-178	103	RGS conduit	0.00	3324.51	0.00	Pull Rope 1	Soft-Fiber Polyester
~~9031~~	~~E-178~~	~~53~~	~~RGS conduit~~	~~0.00~~	~~879.42~~	~~0.00~~	~~Pull Rope 1~~	~~Soft-Fiber Polyester~~
~~9032~~	~~E-178~~	~~53~~	~~RGS conduit~~	~~0.00~~	~~879.42~~	~~0.00~~	~~Pull Rope 1~~	~~Soft-Fiber Polyester~~
9035	E-178 △2	53	RGS conduit	0.00	879.42	0.00	Pull Rope 1	Soft-Fiber Polyester
9036	E-178 △2	78	RGS conduit	0.00	1935.24	0.00	Pull Rope 1	Soft-Fiber Polyester
~~9037~~	~~E-178~~	~~53~~	~~RGS conduit~~	~~0.00~~	~~879.42~~	~~0.00~~	~~Pull Rope 1~~	~~Soft-Fiber Polyester~~
9041	E-178, E-116 E-102	78	RGS conduit	0.00	1935.24	0.00	Pull Rope 1	Soft-Fiber Polyester
9042	E-178, E-116 E-102	78	RGS conduit	0.00	1935.24	0.00	Pull Rope 1	Soft-Fiber Polyester
9043	E-178, E-115	78	RGS conduit	0.00	1935.24	0.00	Pull Rope 1	Soft-Fiber Polyester
9044	E-178, E-115	78	RGS conduit	0.00	1935.24	0.00	Pull Rope 1	Soft-Fiber Polyester

CONDUIT DATA

STRONG MOTION DETECTION SYSTEM

Conduit No	Reference	Size	Type	Total Fill (mm²)	Allowable Fill (mm²)	Cable Area (mm²)	Included Cable No.	Conductor Type
9045	E-173A, E-179 △2	41	RGS conduit	426.78 △2	534.55	0.00	Pull Rope 1	Soft-Fiber Polyester
						47.42	2507-11A	4 pair #22, shielded pairs, FEP insulation (SSC)
						47.42	2507-11B	4 pair #22, shielded pairs, FEP insulation (SSC)
						47.42	2507-11C	4 pair #22, shielded pairs, FEP insulation (SSC)
						47.42	2507-12A	4 pair #22, shielded pairs, FEP insulation (SSC)
						47.42	2507-12B	4 pair #22, shielded pairs, FEP insulation (SSC)
						47.42	2507-12C	4 pair #22, shielded pairs, FEP insulation (SSC)
						47.42	2507-13A	4 pair #22, shielded pairs, FEP insulation (SSC)
						47.42	2507-13B	4 pair #22, shielded pairs, FEP insulation (SSC)
						47.42	2507-13C	4 pair #22, shielded pairs, FEP insulation (SSC)
9046	E-173A, E-179 △2	41	RGS conduit	284.52 △2	534.55	0.00	Pull Rope 1	Soft-Fiber Polyester
						47.42	2507-14A	4 pair #22, shielded pairs, FEP insulation (SSC)
						47.42	2507-14B	4 pair #22, shielded pairs, FEP insulation (SSC)
						47.42	2507-14C	4 pair #22, shielded pairs, FEP insulation (SSC)
						47.42	2507-15A	4 pair #22, shielded pairs, FEP insulation (SSC)
						47.42	2507-15B	4 pair #22, shielded pairs, FEP insulation (SSC)
						47.42	2507-15C	4 pair #22, shielded pairs, FEP insulation (SSC)
9047	E-173A, E-179	41	RGS conduit	0.00	534.55	0.00	Pull Rope 1	Soft-Fiber Polyester
9050	E-112, E-173A, E-102	41	RGS conduit	121.74 △3	708.28	0.00	Pull Rope 1	Soft-Fiber Polyester
						121.74	2507-3	4 pair #22, shielded pairs, 300 V, PE insulation (ISDN cable)
9051	E-111, E-173A, E-102	41 △3	RGS conduit	171.97	414.28	102.61	UP004-8	1-2/C + gnd #12, 600 V, EPR insulation
						0.00	Pull Rope 1	Soft-Fiber Polyester
						69.36	2507-16	1-4/C #16 with overall shield, 600 V, FR-EP insulation, CPE jacket △3
9052	E-173A, E-102, E-112	41	RGS conduit	0.00	534.55	0.00	Pull Rope 1	Soft-Fiber Polyester

△3 △4 REGISTERED PROFESSIONAL ENGINEER DAVID H. OTO No. 10689 Exp. 06/30/2011 ELECTRICAL STATE OF CALIFORNIA

△1 △2 REGISTERED PROFESSIONAL ENGINEER FADI WALIEDDINE No. 11465 Exp. 12/31/2009 ELECTRICAL STATE OF CALIFORNIA

MARK	DATE	DESCRIPTIONS	REV	CK	CCO NO.
△4	2/24/10	Updated the size of conduit 9020.	JH	EJL	Final Routing & Misc
△3	1/29/10	Revised cable from 1-3/C #16 to 1/4C #16. Changed conduit size 9050 and 9051.	JH	EJL	Conductor Change/ Misc.
△2	7/31/09	Added cables to conduits 9020, 9021 9022, 9023, 9024, 9045, 9046, 9050 and 9051. Deleted conduits 9031, 9032 and 9037. Added conduits 9047 and 9052. Change conduit size 9036.	RSB	EJL	Geotech Arroys
△1	5/29/09	Added conduits 9025A and 9025B			101

REVISIONS

CONTRACT CHANGE ORDER NO. 146
SHEET 49 OF 50

DETAILS
CONDUIT AND TRAY SCHEDULE

E-241

STATE OF CALIFORNIA - DEPARTMENT OF TRANSPORTATION
Caltrans

DESIGN OVERSIGHT: BEHZAD GOLEMOHAMMADI

	DATE	REVISED BY	DATE REVISED
CALCULATED/ DESIGNED BY	FK	AB	
CHECKED BY	2/06	2/06	

LAST REVISION 00-00-00 DATE PLOTTED => 2/24/2010 TIME PLOTTED => 9:22:37 AM

FOR REDUCED PLANS ORIGINAL SCALE IS IN MILLIMETERS 0 20 40 60 80

DGN FILE =>T:\13103\MS\pse\OTO-Contract 1\CCO\Electrical\CCO-Final Routing\401201ua241r4.dgn
USERNAME =>llorico

CU 04251 EA 0120L1

DIST	COUNTY	ROUTE	KILOMETER POST TOTAL PROJECT	SHEET No.	TOTAL SHEETS
04	Ala	80	1.6/2.7	595 R3	643

REGISTERED ELECTRICAL ENGINEER 05/15/06 DATE

1-29-07
PLANS APPROVAL DATE

REGISTERED PROFESSIONAL ENGINEER JENS ERLINGSSON No. 8249 Exp. 9/30/08 ELECTRICAL STATE OF CALIFORNIA

PB POWER, Inc.
A Parsons Brinckerhoff Company
303 Second St., Suite 700N
San Francisco, CA 94107-1317

The State of California or its officers or agents shall not be responsible for the accuracy or completeness of electronic copies of this plan sheet.

To get to the Caltrans web site, go to http://www.dot.ca.gov

Caltrans Metric

CONDUIT DATA

MOLE SUBSTATION ARCHITECTURAL

Conduit No.	Reference	Size	Type	Total Fill (mm²)	Allowable Fill (mm²)	Cable Area (mm²)	Included Cable No.	Conductor Type
0201	AE-5, E-101, E-102, E-111	103	RGS conduit	0.00	3324.51	0.00	Pull Rope 1	Soft-Fiber Polyester
0202	AE-5, E-101, E-102, E-111	103	RGS conduit	2628.48	3324.51	2628.48	1003-1	3-1/C #4/0, 15 kV, EPR insulation
						0.00	Pull Rope 1	Soft-Fiber Polyester
0203	AE-5, E-101, E-102, E-111	103	RGS conduit	0.00	3324.51	0.00	Pull Rope 1	Soft-Fiber Polyester
0204	AE-5, E-101, E-102, E-111	103	RGS conduit	0.00	3324.51	0.00	Pull Rope 1	Soft-Fiber Polyester
0205	AE-5, E-101, E-102, E-111	103	RGS conduit	0.00	3324.51	0.00	Pull Rope 1	Soft-Fiber Polyester
0206	AE-5, E-101, E-102, E-111	103	RGS conduit	0.00	3324.51	0.00	Pull Rope 1	Soft-Fiber Polyester
0216			Not used					
0300	AE-5, E-101, E-102, E-112	103	RGS conduit	0.00	3324.51	0.00	Pull Rope 1	Soft-Fiber Polyester
0301	AE-5, E-101, E-102, E-112	103	RGS conduit	0.00	3324.51	0.00	Pull Rope 1	Soft-Fiber Polyester 3
						~~1201.71~~	~~1474-26~~	~~50 pair #18, shielded pairs, IS/OS shield 600 V, XLPE insul., PVC jacket~~
						~~1201.71~~	~~2474-27~~	~~50 pair #18, shielded pairs, IS/OS shield 600 V, XLPE insul., PVC jacket~~
0302	AE-5, E-101, E-102, E-112	103	RGS conduit	121.74	4404.97	0.00	Pull Rope 1	Soft-Fiber Polyester
					2	121.74	2507-3	4 pair #22, shielded pairs, 300 V, PE insulation (ISDN cable)
0304	AE-5, E-101, E-102, E-112	103	RGS conduit	2403.42	2576.49	1201.71	3 1473-26	50 pair #18, shielded pairs, IS/OS shield 600 V, XLPE insul., PVC jacket
						1201.71	1474-26	50 pair #18, shielded pairs, IS/OS shield 600 V, XLPE insul., PVC jacket
						0.00	Pull Rope 1	Soft-Fiber Polyester
0303 3	AE-5, E-101, E-102, E-112	103	RGS conduit	196.20	2576.49	0.00	Pull Rope 1	Soft-Fiber Polyester
						98.10	1803	1 - 2 pair, shielded #18 with IS/OA, 600 V, PVC
						98.10	1804	1 - 2 pair, shielded #18 with IS/OA, 600 V, PVC
0305	AE-5, E-101, E-102, E-112	103	RGS conduit	0.00	3324.51	0.00	Pull Rope 1	Soft-Fiber Polyester
0306	AE-5, E-101, E-102, E-112	103	RGS conduit	0.00	3324.51	0.00	Pull Rope 1	Soft-Fiber Polyester 3
0307	AE-5, E-101, E-102, E-112	103	RGS conduit	1201.71	2576.49	1201.71	2473-27	50 pair #18, shielded pairs, overall shield 600 V, XLPE insul., PVC jacket
						1201.71	2474-27	50 pair #18, shielded pairs, overall shield 600 V, XLPE insul., PVC jacket
						0.00	Pull Rope 1	Soft-Fiber Polyester
0400	AE-5, E-101, E-102, E-111	103	RGS conduit	732.20	2576.49	366.10	1627	1-3/C+gnd #4, 600 V, EPR insulation
						0.00	Pull Rope 1	Soft-Fiber Polyester
						366.10	1626	1-3/C+gnd #4, 600 V, EPR insulation
0401	AE-5, E-101, E-102, E-111	103	RGS conduit	849.65 1	3324.51 1	0.00	Pull Rope 1	Soft-Fiber Polyester
						262.68	A-1006	1-3/C + gnd #8, 600 V, EPR insulation
						262.68	A-1007	1-3/C + gnd #8, 600 V, EPR insulation
						324.29	A-1008	1-3/C + gnd #6, 600 V, EPR insulation
0402	AE-5, E-101, E-102, E-111	103	RGS conduit	186.11 3	2576.49 2	3 0.00	Pull Rope 1	Soft-Fiber Polyester 3
						69.36	2507-16	1-4/C #16, 600 V, EPR insulation
						~~102.61~~	UP004-8	~~1-2/C + gnd #12, 600V, EPR insulation~~
0403	AE-5, E-101, E-102, E-111	103	RGS conduit	0.00	3324.51	0.00	Pull Rope 1	Soft-Fiber Polyester
0404	AE-5, E-101, E-102, E-111	103	RGS conduit	0.00	3324.51	0.00	Pull Rope 1	Soft-Fiber Polyester
0405	AE-5, E-101, E-102, E-111	103	RGS conduit	0.00	3324.51	0.00	Pull Rope 1	Soft-Fiber Polyester
0406	AE-5, E-101, E-102, E-111	103	RGS conduit	0.00	3324.51	0.00	Pull Rope 1	Soft-Fiber Polyester
0407	AE-5, E-101, E-102, E-111	103	RGS conduit	0.00	3324.51	0.00	Pull Rope 1	Soft-Fiber Polyester
0408	AE-5, E-101, E-102, E-111	103	RGS conduit	0.00	3324.51	0.00	Pull Rope 1	Soft-Fiber Polyester

CONDUIT DATA

MOLE SUBSTATION ARCHITECTURAL

Conduit No.	Reference	Size	Type	Total Fill (mm²)	Allowable Fill (mm²)	Cable Area (mm²)	Included Cable No.	Conductor Type
0409	AE-5, E-101, E-102, E-111	103	RGS conduit	972.87	3324.51	324.29	S-1601	1-3/C+gnd #6, 600 V, EPR insulation
						324.29	S-1602	1-3/C+gnd #6, 600 V, EPR insulation
						324.29	A-1005	1-3/C+gnd #6, 600 V, EPR insulation
						0.00	Pull Rope 1	Soft-Fiber Polyester 3
0410	AE-5, E-101, E-102, E-111	103	RGS conduit	138.72	2576.49	69.36	1656-1	1- 4/C #16 with overall shield, 600 V, FR-EP insulation, CPE jacket
						69.36	1656-2	1- 4/C #16 with overall shield, 600 V, FR-EP insulation, CPE jacket
						0.00	Pull Rope 1	Soft-Fiber Polyester
0411	AE-5, E-101, E-102, E-111	103	RGS conduit	0.00	3324.51	0.00	Pull Rope 1	Soft-Fiber Polyester
0383	AE-5, E-101	53	RGS conduit	0.00	879.42	0.00	Pull Rope 1	Soft-Fiber Polyester
0384	AE-5, E-101	53	RGS conduit	0.00	879.42	0.00	Pull Rope 1	Soft-Fiber Polyester
0385	E-80	41	RGS conduit	0.00	534.55	0.00	Pull Rope 1	Soft-Fiber Polyester
0386	E-80	41	RGS conduit	0.00	534.55	0.00	Pull Rope 1	Soft-Fiber Polyester
0480	AE-5, E-101	103	RGS conduit	0.00	3324.51	0.00	Pull Rope 1	Soft-Fiber Polyester
0481	AE-5, E-101	53	RGS conduit	0.00	879.42	0.00	Pull Rope 1	Soft-Fiber Polyester

2

3

REGISTERED PROFESSIONAL ENGINEER DAVID H. OTO No. 10699 Exp. 06/30/2011 ELECTRICAL STATE OF CALIFORNIA

1 2

REGISTERED PROFESSIONAL ENGINEER FADI WALIEDDINE No. 11465 Exp. 12/31/2009 ELECTRICAL STATE OF CALIFORNIA

MARK	DATE	DESCRIPTIONS	REV	CK	CCO NO.
3	1/29/10	Revised cable routed in 0301, 0303, 0304, 0307, and 0410. Revised cable from 1-3/C #16 to 1-4/C #16.	JH	EJL	Conductor Change/ Misc.
2	7/31/09	Added conduits 0383, 0384, 0385, 0386, 0480 and 0481. Added cables to conduits 0302 and 0402	RSB	EJL	Geotech Arrays
1	8/29/08	Added cable/ckts A-1006, A-1007, A-1008	JH	EJL	Light Pipe

REVISIONS

CONTRACT CHANGE ORDER NO. 146
SHEET 50 OF 50

DETAILS
CONDUIT AND TRAY SCHEDULE

E-242

DATE	REVISED BY	DATE	REVISED
FK	2/06	AB	2/06

CALCULATED/DESIGNED BY
CHECKED BY

DESIGN OVERSIGHT
BEHZAD GOLEMOHAMMADI

STATE OF CALIFORNIA - DEPARTMENT OF TRANSPORTATION
Caltrans

FOR REDUCED PLANS ORIGINAL SCALE IS IN MILLIMETERS 0 20 40 60 80

DGN FILE =>I:\13103\MS\pse\OTO-Contract 1\CCO\Electrical\CCO-Conductor change & misc\40120lud242r3.dgn
USERNAME =>fusco

CU 04251 EA 0120L1

LAST REVISION 00-00-00
DATE PLOTTED => 2/2/2010
TIME PLOTTED => 1:44:55 PM

STATE OF CALIFORNIA - DEPARTMENT OF TRANSPORTATION

CONTRACT CHANGE ORDER MEMORANDUM

TO: AMER BATA / BEN GHAFGHAZI	FILE: E.A. 04 - 0120L4
	CO-RTE-PM ALA-80-1.6/2.7
FROM: BEN GHAFGHAZI	FED. NO. NO FED AID
CCO#: 146 SUPPLEMENT#: 0 Category Code: CBPC	CONTINGENCY BALANCE (incl. this change) $2,344,862.40
COST: $179,565.00 INCREASE ☑ DECREASE ☐	HEADQUARTERS APPROVAL REQUIRED? ☐ YES ☑ NO
SUPPLEMENTAL FUNDS PROVIDED: $0.00	IS THIS REQUEST IN ACCORDANCE WITH ENVIRONMENTAL DOCUMENTS? ☑ YES ☐ NO
CCO DESCRIPTION: Various Electrical Changes	**PROJECT DESCRIPTION:** Construct bridge, roadway, building and electrical system.

Original Contract Time:	Time Adj. This Change:	Previously Approved CCO Time Adjustments:	Percentage Time Adjusted: (including this change)	Total # of Unreconciled Deferred Time CCO(s): (including this change)
810 Day(s)	DEF Day(s)	184 Day(s)	23 %	16

THIS CHANGE ORDER PROVIDES FOR:

Compensating the contractor for the electrical changes as described below. The work specified herein, and all work otherwise directed by the Engineer, shall be performed in accordance with Section 86 "SIGNALS, LIGHTING AND ELECTRICAL SYSTEMS" of the Standard Specifications, and Section 10-3.10 "CONDUCTORS, CABLE AND WIRING" of Special Provisions.

1) The contract plans incorrectly show the locations of the two wooden light poles to be in conflict with the pavement for the Eastbound Detour. The contractor had already installed the wooden poles per the original contract plans, prior to paving the Eastbound Detour. Caltrans Project Development has also requested that power connections be removed on the wooden poles, per the memo dated 3/8/2010. Power connections removed with this CCO will be installed in the future by others, as part of Oakland Touchdown 2 project. Therefore, this change provides for the relocation of the two wooden poles and removal of power connections as shown on sheets 3 of 50 and 4 of 50 of this CCO.

2) Caltrans Project Development requested the addition of Photoelectric Cell (PEC3), conduits and cables, and changing of the breaker size from 20A to 30A, in the new Mole Substation, per the memo dated 3/8/2010. This portion of the change order is shown on sheets 5 of 50 through 25 of 50 of this CCO.

3) Caltrans Project Development requested the installation of two 50 pair #18 communication cables with cable numbers 1473-26 and 1474-26 in one conduit instead of two conduits, between pier 21L and the new Mole Substation, per the memo dated 3/8/2010. This change provides for a spare conduit for future use. This portion of the change order is shown on sheets 26 of 50 through 50 of 50 of this CCO.

4) Caltrans Project Development requested the installation of 50 pair #18 communication cables with cable numbers 2473-26 and 2474-27 in one conduit instead of two conduits, between Oakland Substation and the new Mole Substation, per the memo dated 3/1/2010. This change provides for a spare conduit for future use. This portion of the change order is shown on sheets 26 of 50 through 50 of 50 of this CCO.

5) Caltrans Project Development requested the addition of cables with numbers 1656-1 and 1656-2, per the memo dated 3/8/2010. This change provides for cables required for the TOS Control Cabinet door alarm at Platforms 18L and 21L. This portion of the change order is shown on sheets 26 of 50 through 50 of 50 of this CCO.

6) Caltrans Project Development requested the relocation of cables 1006, 1007, 1803, 1804, 1626, 1627, UP171-10 and UP172-10, per the memo dated 3/2/2010. This change is necessary to match the equipment shown in the approved submittals from the contractor. This portion of the change order is shown on sheets 26 of 50 through 50 of 50 of this CCO.

7) Caltrans Project Development requested the revision conductor size as shown on sheets 26 of 50 through 50 of 50 of this CCO, per the memo dated 3/2/2010. This change is necessary because the contractor was unable to procure the cable types listed on the contract plans due to the limited availability of standard cable reels.

Payment for the Extra Work will be a Lump Sum of $179,565.00, which can be financed from the contingency fund. A

ADA Notice: For individuals with sensory disabilities, this document is available in alternate formats. For information call: (916) 654-6410 or TDD (916) 654-3880 or write Records and Forms Management, 1120 N Street, MS-89, Sacramento, CA 95814.

detailed cost analysis has been submitted by the Contractor, which was verified by the Engineer as reasonable. The cost analysis is in file at the Resident Engineer's office.

This change order was requested by the Jaime Gutierrez of Project Development (memos attached). This change order has been discussed and concurred with Mike Forner, SFOBB Principal Construction Engineer and Patrick Treacy, HQ Construction Coordinator, as well as Jaime Gutierrez of Project Development, Parviz Boozarpour of Electrical Design, and Rene Fortaleza of Electrical Maintenance.

Adjustment of contract time is deferred pending completion of the work specified in this change as it may affect the controlling operation

CONCURRED BY:		
Construction Engineer:	Ben Ghafghazi	Date 3/15/2010
Bridge Engineer:		Date
Project Engineer:	Jaime Gutierrez	Date 3/8/10
Project Manager:		Date
FHWA Rep.:		Date
Environmental:		Date
Other (specify):	Mike Forner, Principal TE	Date 3/16/10
Other (specify):	Patrick Treacy, HQ Const. Coord.	Date 3/15/10
District Prior Approval By:		Date
HQ (Issue Approve) By:		Date
Resident Engineer's Signature:		Date 3/15/2010

ESTIMATE OF COST

	THIS REQUEST	TOTAL TO DATE
ITEMS	$0.00	$0.00
FORCE ACCOUNT	$0.00	$0.00
AGREED PRICE	$179,565.00	$179,565.00
ADJUSTMENT	$0.00	$0.00
TOTAL	$179,565.00	$179,565.00

FEDERAL PARTICIPATION

☐ PARTICIPATING ☐ PARTICIPATING IN PART ☑ NONE
☐ NON-PARTICIPATING (MAINTENANCE) ☐ NON-PARTICIPATING

FEDERAL SEGREGATION (if more than one Funding Source or P.I.P. type)
☑ CCO FUNDED PER CONTRACT ☐ CCO FUNDED AS FOLLOWS

FEDERAL FUNDING SOURCE	PERCENT

ADA Notice: For individuals with sensory disabilities, this document is available in alternate formats. For information call: (916) 654-6410 or TDD (916) 654-3880 or write Records and Forms Management, 1120 N Street, MS-89, Sacramento, CA 95814.

STATE OF CALIFORNIA - DEPARTMENT OF TRANSPORTATION

CONTRACT CHANGE ORDER MEMORANDUM

DATE: 4/29/2010 Page 1 of 1

TO: AMER BATA / BEN GHAFGHAZI

FROM: BEN GHAFGHAZI

FILE: **E.A.** 04 - 0120L4
CO-RTE-PM ALA-80-1.6/2.7
FED. NO. NO FED AID

CCO#: **146** | SUPPLEMENT#: **1** | Category Code: **AFZZ**

CONTINGENCY BALANCE (incl. this change) **$1,866,527.40**

COST: **$0.00** INCREASE ☐ DECREASE ☐

HEADQUARTERS APPROVAL REQUIRED? ☐ YES ☑ NO

SUPPLEMENTAL FUNDS PROVIDED: **$0.00**

IS THIS REQUEST IN ACCORDANCE WITH ENVIRONMENTAL DOCUMENTS? ☑ YES ☐ NO

CCO DESCRIPTION:
Time Adjustment of 0 Days

PROJECT DESCRIPTION:
Construct bridge, roadway, building and electrical system.

Original Contract Time:	Time Adj. This Change:	Previously Approved CCO Time Adjustments:	Percentage Time Adjusted: (including this change)	Total # of Unreconciled Deferred Time CCO(s): (including this change)
810 Day(s)	0 Day(s)	184 Day(s)	23 %	0

THIS CHANGE ORDER PROVIDES FOR:

A time adjustment of 0 (zero) working days, in accordance with Section 8-1.07, "Liquidated Damages", of the Standard Specifications.

It has been determined that the work of Contract Change Order No. 146, Supplement #0, has had no impact on the contractor's controlling operation. Therefore, a time extension of 0 days is recommended.

Total Time Adjustment = 0 Days

CONCURRED BY:

Construction Engineer:	Ben Ghafghazi	Date 5/3/2010
Bridge Engineer:		Date
Project Engineer:		Date
Project Manager:		Date
FHWA Rep.:		Date
Environmental:		Date
Other (specify):		Date
Other (specify):		Date
District Prior Approval By:		Date
HQ (Issue Approve) By:		Date
Resident Engineer's Signature:		Date 5/3/2010

ESTIMATE OF COST

	THIS REQUEST	TOTAL TO DATE
ITEMS	$0.00	$0.00
FORCE ACCOUNT	$0.00	$0.00
AGREED PRICE	$0.00	$179,565.00
ADJUSTMENT	$0.00	$0.00
TOTAL	$0.00	$179,565.00

FEDERAL PARTICIPATION

☐ PARTICIPATING ☐ PARTICIPATING IN PART ☑ NONE
☐ NON-PARTICIPATING (MAINTENANCE) ☐ NON-PARTICIPATING

FEDERAL SEGREGATION (If more than one Funding Source or P.I.P. type)
☑ CCO FUNDED PER CONTRACT ☐ CCO FUNDED AS FOLLOWS

FEDERAL FUNDING SOURCE	PERCENT

ADA Notice: For individuals with sensory disabilities, this document is available in alternate formats. For information call: (916) 654-6410 or TDD (916) 654-3880 or write Records and Forms Management, 1120 N Street, MS-89, Sacramento, CA 95814.

STATE OF CALIFORNIA - DEPARTMENT OF TRANSPORTATION

CONTRACT CHANGE ORDER

Change Requested by: Engineer

CCO: 146	Suppl. No. 1	Contract No. 04 - 0120L4 Road ALA-80-1.6/2.7	FED. AID LOC.: NO FED AID

To: **M C M CONSTRUCTION INC**

You are directed to make the following changes from the plans and specifications or do the following described work not included in the plans and specifications for this contract. ***NOTE: This change order is not effective until approved by the Engineer.***

Description of work to be done, estimate of quantities and prices to be paid. (Segregate between additional work at contract price, agreed price and force account.) Unless otherwise stated, rates for rental of equipment cover only such time as equipment is actually used and no allowance will be made for idle time. This last percentage shown is the net accumulated increase or decrease from the original quantity in the Engineer's Estimate.

TIME ADJUSTMENT:

A determination of the delay in completion of the contract due to the work specified by Contract Change Order No. 146, Supplement #0, has been made in accordance with the provisions of Section 8-1.07 of the Standard Specifications.

Time Adjustment = 0 Days

Acceptance of this change order constitutes an agreement of full resolution of all time impact costs resulting from Change Order No. 146, Supplement #0.

This change order acts to resolve the deferred time issued on Change Order No. 146, Supplement #0, and no additional time shall be granted.

Estimated Cost: **Increase** ☐ **Decrease** ☐ **$0.00**

By reason of this order the time of completion will be adjusted as follows: 0 days

Signature	**Resident Engineer** Ben Ghafghazi	**Date** 5/3/2010
Signature	**Construction Engineer** Ben Ghafghazi	**Date** 5/3/2010
Signature	**Construction Manager** Amer Bata	**Date** 7/14/10

We the undersigned contractor, have given careful consideration to the change proposed and agree, if this proposal is approved, that we will provide all equipment, furnish the materials, except as may otherwise be noted above, and perform all services necessary for the work above specified, and will accept as full payment therefor the prices shown above.

NOTE: If you, the contractor, do not sign acceptance of this order, your attention is directed to the requirements of the specifications as to proceeding with the ordered work and filing a written protest within the time therein specified.

Signature	**(Print name and title)** JAMES A. CARTER, PRESIDENT	**Date** 7/14/10

STATE OF CALIFORNIA - DEPARTMENT OF TRANSPORTATION

CONTRACT CHANGE ORDER

Change Requested by: Engineer

CCO: 148	Suppl. No. 0	Contract No. 04 - 0120L4	Road ALA-80-1.6/2.7	FED. AID LOC.: NO FED AID

To: **M C M CONSTRUCTION INC**

You are directed to make the following changes from the plans and specifications or do the following described work not included in the plans and specifications for this contract. ***NOTE: This change order is not effective until approved by the Engineer.***

Description of work to be done, estimate of quantities and prices to be paid. (Segregate between additional work at contract price, agreed price and force account.) Unless otherwise stated, rates for rental of equipment cover only such time as equipment is actually used and no allowance will be made for idle time. This last percentage shown is the net accumulated increase or decrease from the original quantity in the Engineer's Estimate.

Adjustment of Compensation at Lump Sum:

Eliminate concrete barrier cover plates in construction of Concrete Barrier (Type 732 Modified) at Hinges EW, EE, FW, and Abutment 23L.

For the work of this change, the contractor shall credit the Department the agreed lump sum of $26,785.50. This sum constitutes full compensation, including all markups, for this change.

Estimated cost of Adjustment of Compensation at Lump Sum .....($26,785.50)

Estimated Cost: Increase ☐ **Decrease** ☑ **($26,785.50)**

By reason of this order the time of completion will be adjusted as follows: 0 days

Submitted by

Signature	Resident Engineer Ben Ghafghazi	Date 9/1/2010

Approval Recommended by

Signature	Construction Engineer Ben Ghafghazi	Date 9/1/2010

Engineer Approval by

Signature	Construction Manager Amer Bata	Date 9/3/10

We the undersigned contractor, have given careful consideration to the change proposed and agree, if this proposal is approved, that we will provide all equipn furnish the materials, except as may otherwise be noted above, and perform all services necessary for the work above specified, and will accept as full paymer therefor the prices shown above.

NOTE: If you, the contractor, do not sign acceptance of this order, your attention is directed to the requirements of the specifications as to proceeding with the ordered work and filing a written protest within the time therein specified.

Contractor Accepted by

Signature	(Print name and title) Edmundo Arpuchi - Treasurer	Date 9-1-2010

STATE OF CALIFORNIA - DEPARTMENT OF TRANSPORTATION

CONTRACT CHANGE ORDER MEMORANDUM

DATE: 4/6/2010 Page 1 of 1

TO: AMER BATA / BEN GHAFGHAZI	FILE: E.A. 04 - 0120L4
FROM: BEN GHAFGHAZI	CO-RTE-PM ALA-80-1.6/2.7
	FED. NO. NO FED AID
CCO#: 148 SUPPLEMENT#: 0 Category Code: ~~AAZZ~~ CKPA	CONTINGENCY BALANCE (incl. this change): $2,090,087.40
COST: ($26,785.50) INCREASE ☐ DECREASE ☑	HEADQUARTERS APPROVAL REQUIRED? ☐ YES ☑ NO
SUPPLEMENTAL FUNDS PROVIDED: $0.00	IS THIS REQUEST IN ACCORDANCE WITH ENVIRONMENTAL DOCUMENTS? ☑ YES ☐ NO
CCO DESCRIPTION: Eliminate Steel Seismic Barrier Plates	**PROJECT DESCRIPTION:** Construct bridge, roadway, building and electrical system.

Original Contract Time:	Time Adj. This Change:	Previously Approved CCO Time Adjustments:	Percentage Time Adjusted: (including this change)	Total # of Unreconciled Deferred Time CCO(s): (including this change)
810 Day(s)	0 Day(s)	184 Day(s)	23 %	8

THIS CHANGE ORDER PROVIDES FOR:

Eliminating Seismic Joint Steel Barrier Cover Plates specified on Contract plan sheets 274R3 and 274ASR1 of 643, at Hinges EW, EE and FW, and at Abutment 23L (8 total: 4 locations with 2 ea.)

Contract Change Order No. 9 eliminated the seismic joints at Hinges EW, EE and FW, and at Abutment 23L. The joints will be installed on the upcoming Oakland Touchdown 2 contract. Due to the elimination of seismic joints from this contract, there is no need to install the barrier rail cover plates as shown in the contract plans. Therefore, the quantity for the eliminated plates will be credited to the Department.

The method of payment for deleting the cover plates will be by adjustment of compensation at agreed lump sum price of $26,785.50, which can be returned to the available contingency funds. This sum constitutes full compensation, including all markups for the change.

This change order was requested by the Engineer. Maintenance concurrence is not necessary, since this change does not affect maintenance operations. This change order has been discussed and concurred with Mike Forner, SFOBB Principal Construction Engineer and Patrick Treacy, HQ Construction Coordinator.

No adjustment of contract time is warranted as this change does not affect the controlling operation.

CONCURRED BY:		
Construction Engineer:	Ben Ghafghazi	Date 9/1/2010
Bridge Engineer:	Hazzaa El-Mahmoud	Date
Project Engineer:		Date
Project Manager:		Date
FHWA Rep.:		Date
Environmental:		Date
Other (specify):	Mike Forner, Principal TE	Date
Other (specify):	Patrick Treacy, HQ Const. Coord.	Date
District Prior Approval By:		Date
HQ (Issue Approve) By:		Date
Resident Engineer's Signature:		~~Date~~ 9/1/2010

ESTIMATE OF COST

	THIS REQUEST	TOTAL TO DATE
ITEMS	$0.00	$0.00
FORCE ACCOUNT	$0.00	$0.00
AGREED PRICE	$0.00	$0.00
ADJUSTMENT	($26,785.50)	($26,785.50)
TOTAL	($26,785.50)	($26,785.50)

FEDERAL PARTICIPATION

☐ PARTICIPATING ☐ PARTICIPATING IN PART ☑ NONE
☐ NON-PARTICIPATING (MAINTENANCE) ☐ NON-PARTICIPATING

FEDERAL SEGREGATION (if more than one Funding Source or P.I.P. type)
☑ CCO FUNDED PER CONTRACT ☐ CCO FUNDED AS FOLLOWS

FEDERAL FUNDING SOURCE	PERCENT

ADA Notice: For individuals with sensory disabilities, this document is available in alternate formats. For information call: (916) 654-6410 or TDD (916) 654-3880 or write Records and Forms Management, 1120 N Street, MS-89, Sacramento, CA 95814.

CONTRACT CHANGE ORDER

Change Requested by: Engineer

CCO: 149	Suppl. No. 0	Contract No. 04 - 0120L4	Road ALA-80-1.6/2.7	FED. AID LOC.: NO FED AID

To: **M C M CONSTRUCTION INC**

You are directed to make the following changes from the plans and specifications or do the following described work not included in the plans and specifications for this contract. ***NOTE: This change order is not effective until approved by the Engineer.***

Description of work to be done, estimate of quantities and prices to be paid. (Segregate between additional work at contract price, agreed price and force account.) Unless otherwise stated, rates for rental of equipment cover only such time as equipment is actually used and no allowance will be made for idle time. This last percentage shown is the net accumulated increase or decrease from the original quantity in the Engineer's Estimate.

Extra Work at Force Account:

Provide labor, equipment and materials for modifying the ceiling of the compressor room of the Mole Substation, as shown on Sheets 2 of 4 through 4 of 4 of this change order. Also as shown, extend the firewall to close the exposed plenum, and modifiy the three lighting fixtures affected by the aforementioned ceiling change in the compressor room, to hang from the roof metal deck. Also, re-route electrical conduits for these lighting fixtures. All work shall be performed in accordance with Sections 12-15 "MECHANICAL" and 12-16 "ELECTRICAL" of the Special Provisions, and as directed by the Engineer.

Estimated cost of Extra Work at Force Account $18,000.00

Estimated Cost: Increase ☑ Decrease ☐ **$18,000.00**

By reason of this order the time of completion will be adjusted as follows: 0 days

Submitted by

Signature	Resident Engineer Ben Ghafghazi	Date 5/25/2010

Approval Recommended by

Signature	Construction Engineer Ben Ghafghazi	Date 5/25/2010

Engineer Approval by

Signature	~~Construction Engineer~~ Ben Ghafghazi	Date 7/6/2010

We the undersigned contractor, have given careful consideration to the change proposed and agree, if this proposal is approved, that we will provide all equipn furnish the materials, except as may otherwise be noted above, and perform all services necessary for the work above specified, and will accept as full paymer therefor the prices shown above.

NOTE: If you, the contractor, do not sign acceptance of this order, your attention is directed to the requirements of the specifications as to proceeding with the ordered work and filing a written protest within the time therein specified.

Contractor Acceptance by

Signature	(Print name and title) EDMUNDO A. PUCHI, TREASURER	Date 6/29/10

DIST	COUNTY	ROUTE	KILOMETER POST TOTAL PROJECT	SHEET NO.	TOTAL SHEETS
04	Ala	80	1.6/2.7	605	643

Robert Brooks Howell 12/15/03
REGISTERED ARCHITECT

1-29-07
PLANS APPROVAL DATE

Parsons Brinckerhoff Quade & Douglas, Inc.
303 Second Street, Suite 700N
San Francisco, CA 94107

To get to the Caltrans web site, go to: http://www.dot.ca.gov

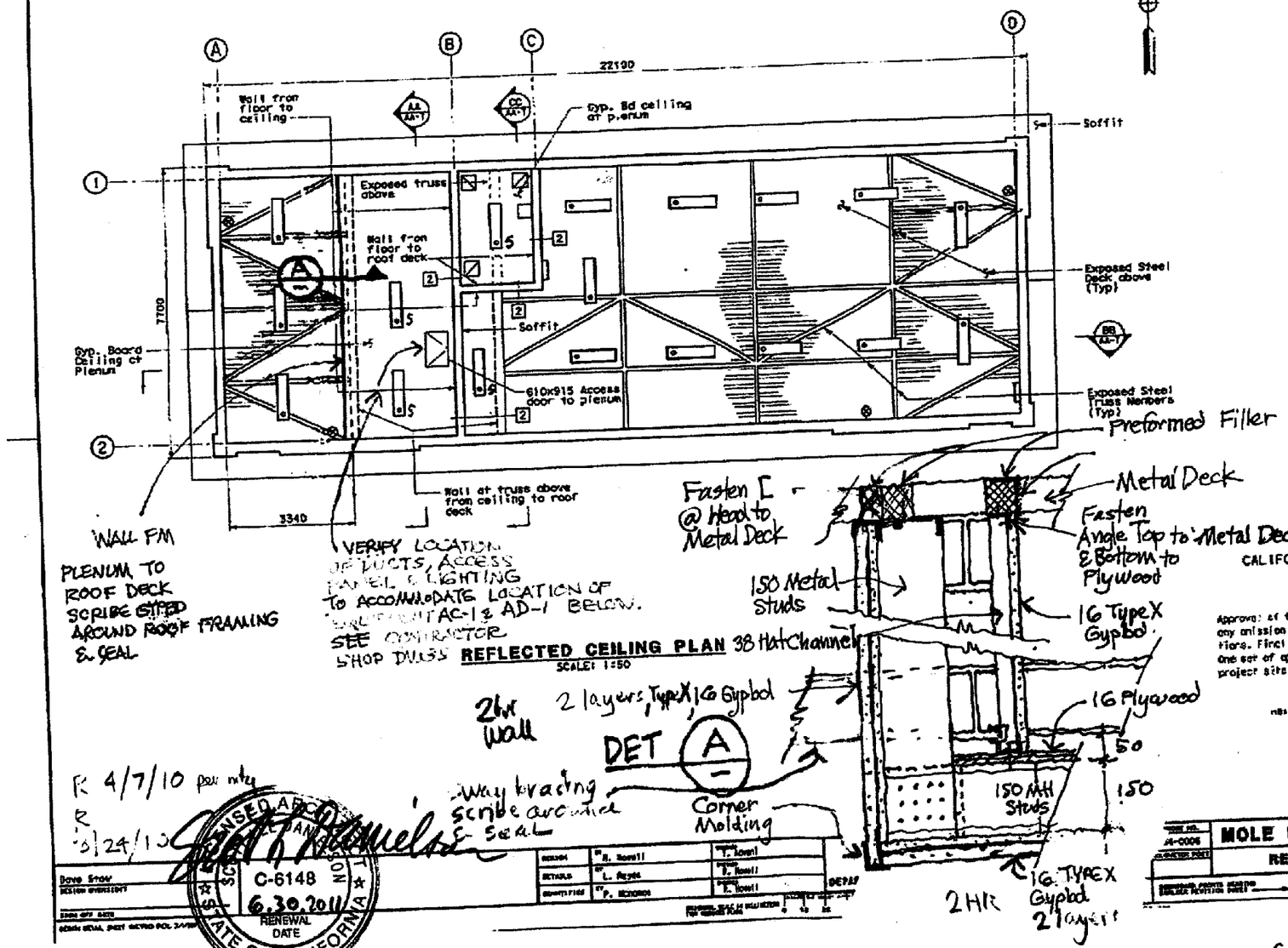

LEGEND:

- Pendant/Soffit Exit Light
- 300x2400 Pendant Light
- Exhaust fan
- Elect. unit heater
- Air intake grille
- S 300x2400 Surface Mtd Light

CALIFORNIA STATE FIRE MARSHAL
APPROVED

Approval of this plan does not authorize or approve any omission or deviation from applicable requirements. Final approval is subject to field inspection. One set of approved plans shall be available on the project site at all times.

Reviewed by: 7-15-96

R 4/7/10 per mtg
R 5/24/10

Dave Snow
DESIGN ENGINEER

LICENSED ARCHITECT
C-6148
6.30.2011
RENEWAL DATE
STATE OF CALIFORNIA

DESIGN	R. Howell	T. Howell
DETAILS	L. Reyes	T. Howell
QUANTITIES	P. Schorsch	T. Howell

DEPARTMENT OF TRANSPORTATION

ALL DIMENSIONS ARE IN MILLIMETERS UNLESS OTHERWISE SHOWN

MOLE SUBSTATION ARCHITECTURAL
REFLECTED CEILING PLAN
AA-4

CONTRACT CHANGE ORDER 149

SHEET 2 OF 4

EA 04-0120L4

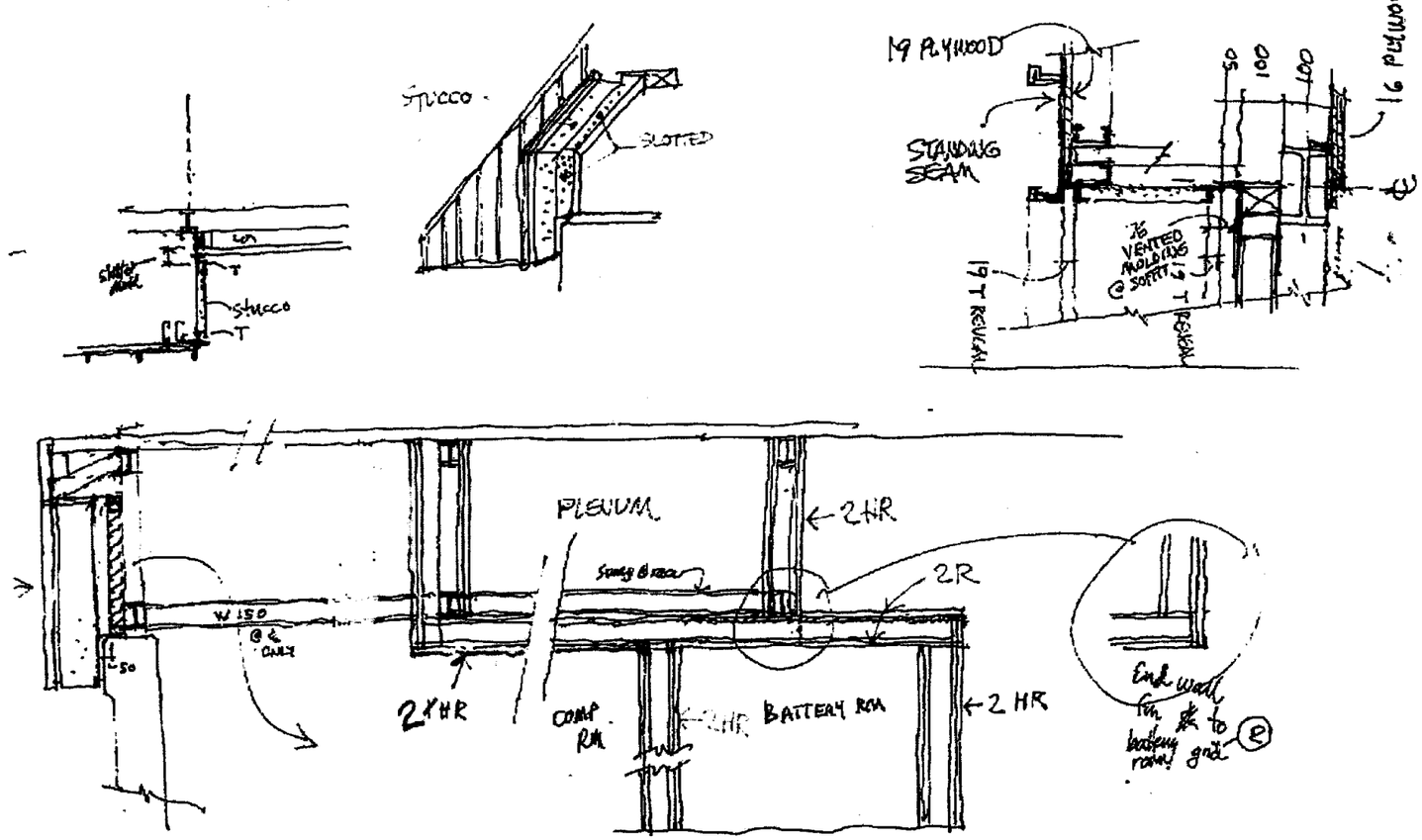

R 4/7/10 per mtg

R 3/24/10

LICENSED ARCHITECT
C-6148
6/30/2011
RENEWAL DATE
STATE OF CALIFORNIA

MISC. SECTION DETAILS
NTS

CONTRACT CHANGE ORDER 149

SHEET 4 OF 4

EA 04-0120L4

STATE OF CALIFORNIA - DEPARTMENT OF TRANSPORTATION

CONTRACT CHANGE ORDER MEMORANDUM

TO: AMER BATA / BEN GHAFGHAZI	FILE: **E.A.** 04 - 0120L4
FROM: BEN GHAFGHAZI	**CO-RTE-PM** ALA-80-1.6/2.7
	FED. NO. NO FED AID
CCO#: **149** SUPPLEMENT#: **0** Category Code: **CAPK**	CONTINGENCY BALANCE (incl. this change) **$1,812,124.40**
COST: **$18,000.00** INCREASE ☑ DECREASE ☐	HEADQUARTERS APPROVAL REQUIRED? ☐ YES ☑ NO
SUPPLEMENTAL FUNDS PROVIDED: **$0.00**	IS THIS REQUEST IN ACCORDANCE WITH ENVIRONMENTAL DOCUMENTS? ☑ YES ☐ NO
CCO DESCRIPTION: Mole SS Plenum & Duct Modification	**PROJECT DESCRIPTION:** Construct bridge, roadway, building and electrical system.

Original Contract Time:	Time Adj. This Change:	Previously Approved CCO Time Adjustments:	Percentage Time Adjusted: (including this change)	Total # of Unreconciled Deferred Time CCO(s): (including this change)
810 Day(s)	**0** Day(s)	**184** Day(s)	**23** %	**0**

THIS CHANGE ORDER PROVIDES FOR:

Modifying firewall at plenum, ceiling at compressor room, mechanical equipment ducting at compressor room, and electrical connections to the mechanical equipment and lighting at compressor room.

This change is necessary to resolve the air intake issues for the mechanical room. The original contract plans incorrectly show the location of the duct from dryer to plenum. To address this issue, the ceiling on the western half of the compressor room will be modified by opening it, exposing the louvers that will allow air intake for the compressor and dryer. Also, due to the change to the ceiling, three lighting fixtures and their appurtenances (shown in sheet 636 of 643 of the contract plans) have to be modified as well. And to close the exposed plenum, the firewall needs to be extended. The details of this change order are shown in sheets 2 of 4 through 4 of 4 of this change order.

Payment for this work will be at Extra Work at Force Account for an estimated cost of $18,000.00, which can be financed from the contingency fund. A force account analysis is on file at the Resident Engineer's office.

Maintenance concurrence is not necessary, as this change does not affect maintenance operations.

No adjustment of contract time is warranted as this change does not affect the controlling operation.

CONCURRED BY:

Construction Engineer:	Ben Ghafghazi	Date 5/24/2010
Bridge Engineer:		Date
Project Engineer:		Date
Project Manager:		Date
FHWA Rep.:		Date
Environmental:		Date
Other (specify):		Date
Other (specify):		Date
District Prior Approval By:		Date
HQ (Issue Approve) By:		Date
Resident Engineer's Signature:		Date 5/24/2010

ESTIMATE OF COST

	THIS REQUEST	TOTAL TO DATE
ITEMS	$0.00	$0.00
FORCE ACCOUNT	$18,000.00	$18,000.00
AGREED PRICE	$0.00	$0.00
ADJUSTMENT	$0.00	$0.00
TOTAL	$18,000.00	$18,000.00

FEDERAL PARTICIPATION

☐ PARTICIPATING ☐ PARTICIPATING IN PART ☑ NONE
☐ NON-PARTICIPATING (MAINTENANCE) ☐ NON-PARTICIPATING

FEDERAL SEGREGATION (if more than one Funding Source or P.I.P. type)
☑ CCO FUNDED PER CONTRACT ☐ CCO FUNDED AS FOLLOWS

FEDERAL FUNDING SOURCE	PERCENT

ADA Notice: For individuals with sensory disabilities, this document is available in alternate formats. For information call: (916) 654-6410 or TDD (916) 654-3880 or write Records and Forms Management, 1120 N Street, MS-89, Sacramento, CA 95814.

STATE OF CALIFORNIA - DEPARTMENT OF TRANSPORTATION

CONTRACT CHANGE ORDER

Change Requested by: Engineer

CCO: 150	Suppl. No. 0	Contract No. 04 - 0120L4	Road ALA-80-1.6/2.7	FED. AID LOC.: NO FED AID

To: **M C M CONSTRUCTION INC**

You are directed to make the following changes from the plans and specifications or do the following described work not included in the plans and specifications for this contract. ***NOTE: This change order is not effective until approved by the Engineer.***

Description of work to be done, estimate of quantities and prices to be paid. (Segregate between additional work at contract price, agreed price and force account.) Unless otherwise stated, rates for rental of equipment cover only such time as equipment is actually used and no allowance will be made for idle time. This last percentage shown is the net accumulated increase or decrease from the original quantity in the Engineer's Estimate.

Extra Work at Lump Sum:

Provide labor, equipment and materials for relocating DI #4a in the Eastbound Detour to conform to the existing drainage pipe. Also, relocate DI #5o of Eastbound Detour 3 meters to the west.

The contractor shall be compensated an agreed lump sum of $13,575.30 for the aforementioned work. This sum constitutues full compensation, including all applicable markups, for the work of this change.

Extra Work at Lump Sum $13,575.30

Estimated Cost: **Increase** ☑ **Decrease** ☐ **$13,575.30**

By reason of this order the time of completion will be adjusted as follows: 0 days

Recommended by		
Signature	**Resident Engineer** Ben Ghafghazi	**Date** 4/21/2010
Concurred by		
Signature	**Construction Engineer** Ben Ghafghazi	**Date** 4/21/2010
Approved by		
Signature	**Construction Engineer** Ben Ghafghazi	**Date** 7/20/2010

We the undersigned contractor, have given careful consideration to the change proposed and agree, if this proposal is approved, that we will provide all equipment, furnish the materials, except as may otherwise be noted above, and perform all services necessary for the work above specified, and will accept as full payment therefor the prices shown above.

NOTE: If you, the contractor, do not sign acceptance of this order, your attention is directed to the requirements of the specifications as to proceeding with the ordered work and filing a written protest within the time therein specified.

Contractor accepts by		
Signature	**(Print name and title)** JAMES A. CARTER	**Date** 7/15/10

STATE OF CALIFORNIA - DEPARTMENT OF TRANSPORTATION

CONTRACT CHANGE ORDER MEMORANDUM

TO: AMER BATA / BEN GHAFGHAZI

FROM: BEN GHAFGHAZI

FILE: **E.A.** 04 - 0120L4
CO-RTE-PM ALA-80-1.6/2.7
FED. NO. NO FED AID

CCO#: **150** SUPPLEMENT#: **0** Category Code: **CCPJ**

CONTINGENCY BALANCE (incl. this change) **$1,974,508.40**

COST: **$13,575.30** INCREASE ☑ DECREASE ☐

HEADQUARTERS APPROVAL REQUIRED? ☐ YES ☑ NO

SUPPLEMENTAL FUNDS PROVIDED: **$0.00**

IS THIS REQUEST IN ACCORDANCE WITH ENVIRONMENTAL DOCUMENTS? ☑ YES ☐ NO

CCO DESCRIPTION:
Relocate Dis on EBDTR

PROJECT DESCRIPTION:
Construct bridge, roadway, building and electrical system.

Original Contract Time:	Time Adj. This Change:	Previously Approved CCO Time Adjustments:	Percentage Time Adjusted: (including this change)	Total # of Unreconciled Deferred Time CCO(s): (including this change)
810 Day(s)	0 Day(s)	184 Day(s)	23 %	8

THIS CHANGE ORDER PROVIDES FOR:

Compensating the contractor for relocating Drainage Inlets (DI) #4a and #5oin the Eastbound Detour (EBDTR) to conform to the existing drainage pipe.

This change is necessary because the location of the existing drainage pipe shown in the contract plans was incorrect. Since DI #4a is to be connected to this existing drainage pipe, the DI must be relocated. Also, DI cleanout #5o was found to be in conflict with the existing capped drainage inlet, and needs to be relocated.

The payment for this Extra Work will be at Lump Sum of $13,575.30, which can be financed from the contingency fund. A detailed cost analysis has been submitted by the contractor, and was verified as reasonable by the Engineer. The cost analysis is on file at the Resident Engineer's office.

This change order has been discussed and concurred with Jaime Gutierrez of Project Development. Maintenance concurrence is not necessary because this change does not affect maintenance operations.

No adjustment of contract time is warranted as this change does not affect the controlling operation.

CONCURRED BY:

Construction Engineer:	Ben Ghafghazi	Date 4/21/2010
Bridge Engineer:		Date
Project Engineer:		Date
Project Manager:		Date
FHWA Rep.:		Date
Environmental:		Date
Other (specify):		Date
Other (specify):		Date
District Prior Approval By:		Date
HQ (Issue Approve) By:		Date
Resident Engineer's Signature:		Date 4/21/2010

ESTIMATE OF COST

	THIS REQUEST	TOTAL TO DATE
ITEMS	$0.00	$0.00
FORCE ACCOUNT	$0.00	$0.00
AGREED PRICE	$13,575.30	$13,575.30
ADJUSTMENT	$0.00	$0.00
TOTAL	$13,575.30	$13,575.30

FEDERAL PARTICIPATION

☐ PARTICIPATING ☐ PARTICIPATING IN PART ☑ NONE
☐ NON-PARTICIPATING (MAINTENANCE) ☐ NON-PARTICIPATING

FEDERAL SEGREGATION (if more than one Funding Source or P.I.P. type)
☑ CCO FUNDED PER CONTRACT ☐ CCO FUNDED AS FOLLOWS

FEDERAL FUNDING SOURCE	PERCENT

ADA Notice: For individuals with sensory disabilities, this document is available in alternate formats. For information call: (916) 654-6410 or TDD (916) 654-3880 or write Records and Forms Management, 1120 N Street, MS-89, Sacramento, CA 95814.

STATE OF CALIFORNIA - DEPARTMENT OF TRANSPORTATION

CONTRACT CHANGE ORDER

Change Requested by: Engineer

CCO: 152	Suppl. No. 0	Contract No. 04 - 0120L4	Road ALA-80-1.6/2.7	FED. AID LOC.: NO FED AID

To: **M C M CONSTRUCTION INC**

You are directed to make the following changes from the plans and specifications or do the following described work not included in the plans and specifications for this contract. ***NOTE: This change order is not effective until approved by the Engineer.***

Description of work to be done, estimate of quantities and prices to be paid. (Segregate between additional work at contract price, agreed price and force account.) Unless otherwise stated, rates for rental of equipment cover only such time as equipment is actually used and no allowance will be made for idle time. This last percentage shown is the net accumulated increase or decrease from the original quantity in the Engineer's Estimate.

Adjustment of Compensation at Lump Sum:

Provide compensation to the Contractor for outstanding working foreman labor provided by the Contractor's subcontractor, Roadway Electrical Works, Inc. (REWI), pertaining to additional work performed by REWI due to changes to the Contract as recognized by the numerous change orders issued by the Department.

For this work, the Contractor shall be compensated an agreed lump sum of $146,606.00. Excluding foreman labor provided under change orders which contain a force account component of work, this lump sum constitutes full and final compensation, including all markups, for all outstanding costs associated with this work.

Excluding any costs incurred under change orders which contain a force account component of work, this change order acts to resolve all outstanding costs incurred by REWI and no additional compensation shall be paid.

Estimated cost of Adjustment of Compensation at Lump Sum $146,606.00

Estimated Cost: Increase ☑ Decrease ☐ **$146,606.00**

By reason of this order the time of completion will be adjusted as follows: 0 days

Submitted by

Signature	Resident Engineer Ben Ghafghazi	Date 7/13/2010

Approval Recommended by

Signature	Construction Engineer Ben Ghafghazi	Date 7/13/2010

Engineer Approval by

Signature	Construction Manager Amer Bata	Date 7/15/10

We the undersigned contractor, have given careful consideration to the change proposed and agree, if this proposal is approved, that we will provide all equipn furnish the materials, except as may otherwise be noted above, and perform all services necessary for the work above specified, and will accept as full paymer therefor the prices shown above.

NOTE: If you, the contractor, do not sign acceptance of this order, your attention is directed to the requirements of the specifications as to proceeding with the ordered work and filing a written protest within the time therein specified.

Contractor Acceptance by

Signature	(Print name and title) JAMES A. CARTER, PRESIDENT	Date 7/14/10

STATE OF CALIFORNIA - DEPARTMENT OF TRANSPORTATION

CONTRACT CHANGE ORDER MEMORANDUM

TO: AMER BATA / BEN GHAFGHAZI	FILE: E.A. 04 - 0120L4
FROM: BEN GHAFGHAZI	CO-RTE-PM ALA-80-1.6/2.7
	FED. NO. NO FED AID
CCO#: 152 SUPPLEMENT#: 0 Category Code: AXZZ	CONTINGENCY BALANCE (incl. this change): $1,163,356.90
COST: $146,606.00 INCREASE ☑ DECREASE ☐	HEADQUARTERS APPROVAL REQUIRED? ☐ YES ☑ NO
SUPPLEMENTAL FUNDS PROVIDED: $0.00	IS THIS REQUEST IN ACCORDANCE WITH ENVIRONMENTAL DOCUMENTS? ☑ YES ☐ NO
CCO DESCRIPTION: Compensation for Foreman Labor	**PROJECT DESCRIPTION:** Construct bridge, roadway, building and electrical system.

Original Contract Time:	Time Adj. This Change:	Previously Approved CCO Time Adjustments:	Percentage Time Adjusted: (including this change)	Total # of Unreconciled Deferred Time CCO(s): (including this change)
810 Day(s)	0 Day(s)	184 Day(s)	23 %	0

THIS CHANGE ORDER PROVIDES FOR:

Compensation to the contractor for outstanding foreman labor costs.

This project provides for the construction of the eastern touchdown and roadway of the new east span of the San Francisco Oakland Bay Bridge (SFOBB). The project was accepted on June 8, 2010.

The project has issued 30 change orders that provided for changes to various electrical elements of work. The cost of these change orders totaled close to $3,400,000 with approximately $2,600,000 of this compensated at agreed lump sum costs.

Throughout the course of the project, the electrical subcontractor requested compensation for superintendent labor provided in the prosecution of the change order work when that superintendent was acting as a working foreman. As Department field staff was uncertain as to the validity of this request, there was a verbal agreement made to defer compensation pertaining to this superintendent labor until a final determination could be reached. The determination has now been made that particular work performed by the superintendents is compensable in accordance with Section 3-904B (4) "Labor" of the Construction Manual.

Compensation for these labor costs performed under force account change orders are now being processed for payment via force account billings, however, addition labor cost have also been agreed to on numerous change orders that were compensated under agreed lump sums. These change orders were accepted by the contractor with the verbal understanding with the Department that superintendent labor costs were deferred. The change orders, however, omitted any reference to these deferred costs.

In order to comply with the verbal agreements made with the contractor, this change order shall provide the agreed upon compensation for all outstanding superintendent costs incurred on agreed price change orders. The change order will also acts to close out all costs on the project with the electrical subcontractor excluding any work performed at force account.

Compensation for this work shall be paid as extra work at an agreed lump sum of $146,606.00 which shall be financed from the contract's contingency funds. A cost analysis is on file.

No adjustment of contract time is warranted as the work will not affect the controlling operation.

Maintenance concurrence is not required as this is an administrative change.

ADA Notice: For individuals with sensory disabilities, this document is available in alternate formats. For information call: (916) 654-6410 or TDD (916) 654-3880 or write Records and Forms Management, 1120 N Street, MS-89, Sacramento, CA 95814.

CONCURRED BY:		
Construction Engineer:	Ben Ghafghazi	Date 7/15/2010
Bridge Engineer:		Date
Project Engineer:		Date
Project Manager:		Date
FHWA Rep.:		Date
Environmental:		Date
Other (specify):		Date
Other (specify):		Date
District Prior Approval By:		Date
HQ (Issue Approve) By:		Date
Resident Engineer's Signature:		Date 7/15/2010

ESTIMATE OF COST

	THIS REQUEST	TOTAL TO DATE
ITEMS	$0.00	$0.00
FORCE ACCOUNT	$0.00	$0.00
AGREED PRICE	$0.00	$0.00
ADJUSTMENT	$146,606.00	$146,606.00
TOTAL	$146,606.00	$146,606.00

FEDERAL PARTICIPATION

☐ PARTICIPATING ☐ PARTICIPATING IN PART ☑ NONE
☐ NON-PARTICIPATING (MAINTENANCE) ☐ NON-PARTICIPATING

FEDERAL SEGREGATION (if more than one Funding Source or P.I.P. type)
☑ CCO FUNDED PER CONTRACT ☐ CCO FUNDED AS FOLLOWS

FEDERAL FUNDING SOURCE	PERCENT

ADA Notice: For individuals with sensory disabilities, this document is available in alternate formats. For information call: (916) 654-6410 or TDD (916) 654-3880 or write Records and Forms Management, 1120 N Street, MS-89, Sacramento, CA 95814.

STATE OF CALIFORNIA - DEPARTMENT OF TRANSPORTATION

CONTRACT CHANGE ORDER

Change Requested by: Engineer

CCO: 153	Suppl. No. 0	Contract No. 04 - 0120L4	Road ALA-80-1.6/2.7	FED. AID LOC.: NO FED AID

To: **M C M CONSTRUCTION INC**

You are directed to make the following changes from the plans and specifications or do the following described work not included in the plans and specifications for this contract. ***NOTE: This change order is not effective until approved by the Engineer.***

Description of work to be done, estimate of quantities and prices to be paid. (Segregate between additional work at contract price, agreed price and force account.) Unless otherwise stated, rates for rental of equipment cover only such time as equipment is actually used and no allowance will be made for idle time. This last percentage shown is the net accumulated increase or decrease from the original quantity in the Engineer's Estimate.

Adjustment of Compensation at Lump Sum:

Provide compensation to the Contractor for all outstanding Contract costs.

For these costs, the Contractor shall be compensated a lump sum of $267,843.65. This payment constitutes full and final compensation, including all markups and interest due, for the settlement of all direct, indirect and consequential costs incurred by the Contractor due to all Department changes and delays and all unanticipated conditions encountered.

This lump sum compensation along with all prior payments provided and deductions taken on this contract will provide final compensation to the Contractor in the amount of $194,152,531.60. The Contractor agrees to accept this amount as full compensation to resolve all outstanding direct, indirect and consequential costs incurred on this Contract, including all subsidiaries, subcontractors and suppliers and no additional compensation shall be paid to the Contractor.

This change order acts as final and complete resolution of all outstanding Exceptions to the Proposed Final Estimated as submitted by the Contractor.

By acceptance of this change order, the Contractor agrees to the compensation as provided herein. This change order sha constitute a final binding agreement in connection with the resolution of all outstanding Contract costs.

Cost of Adjustment of Compensation at Lump Sum $267,843.65

Estimated Cost: Increase ☑ **Decrease** ☐ **$267,843.65**

By reason of this order the time of completion will be adjusted as follows: 0 days

Submitted by

Signature	Resident Engineer BEN GHAFGHAZI	Date 4/5/2011

Approval Recommended by

Signature for	Construction Manager Amer Bata	Date 4/5/11

Engineer Approval by

Signature	Construction Manager for Amer Bata	Date 4/6/11

We the undersigned contractor, have given careful consideration to the change proposed and agree, if this proposal is approved, that we will provide all equipment, furnish the materials, except as may otherwise be noted above, and perform all services necessary for the work above specified, and will accept as full payment therefor the prices shown above.

NOTE: If you, the contractor, do not sign acceptance of this order, your attention is directed to the requirements of the specifications as to proceeding with the ordered work and filing a written protest within the time therein specified.

Contractor Acceptance by

Signature	(Print name and title) Edmundo A Ruchi - Treasurer	Date 4-6-2011

STATE OF CALIFORNIA - DEPARTMENT OF TRANSPORTATION

CONTRACT CHANGE ORDER MEMORANDUM

TO: AMER BATA / BEN GHAFGHAZI	FILE: **E.A.** 04 - 0120L4
FROM: BEN GHAFGHAZI	**CO-RTE-PM** ALA-80-1.6/2.7
	FED. NO. NO FED AID
CCO#: **153** SUPPLEMENT#: **0** Category Code: **GXEB**	CONTINGENCY BALANCE (incl. this change) **$626,873.90**
COST: **$267,843.65** INCREASE ☑ DECREASE ☐	HEADQUARTERS APPROVAL REQUIRED? ☑ YES ☐ NO
SUPPLEMENTAL FUNDS PROVIDED: **$0.00**	IS THIS REQUEST IN ACCORDANCE WITH ENVIRONMENTAL DOCUMENTS? ☑ YES ☐ NO
CCO DESCRIPTION: Contract Closeout	**PROJECT DESCRIPTION:** Construct bridge, roadway, building and electrical system.

Original Contract Time:	Time Adj. This Change:	Previously Approved CCO Time Adjustments:	Percentage Time Adjusted: (including this change)	Total # of Unreconciled Deferred Time CCO(s): (including this change)
810 Day(s)	**0** Day(s)	**0** Day(s)	**0** %	**0**

THIS CHANGE ORDER PROVIDES FOR:
CCO No. 153 – Contract Closeout:

Compensation to the Contractor to resolve all outstanding costs on the contract.

This contract provided for the construction of the eastern touchdown and roadway approach to the new ease span of the San Francisco Oakland Bay Bridge. The contract was accepted on June 14, 2010 with the Proposed Final Estimate (PFE) being issued to the contractor on September 27, 2010.

The contractor returned their Exceptions to the PFE on October 28, 2010 with listed exceptions of $1,911,334.71. These exceptions included item work, agreed lump sum or unit price change orders and force account billings along with interest for the late payment of submitted costs. A total payment of $1,162,805 has been issued, through several semi-final estimates, to compensate the contractor for compensation owed for outstanding contract items, agreed price change orders and unpaid force account billings.

An agreement on the remaining outstanding costs has now been reached in the amount of $267,843.65 which will be compensated under this change order. This change order will act to resolve all outstanding contract costs as submitted within the contractor's Exceptions to the Proposed Final Estimate.

The compensation being provided includes payment of outstanding force account billings that have been determined to be compensable costs under the contract. Compensation also includes interest costs for the late payment of submitted billings which is being paid in accordance with the contract special provisions.

Compensation shall be made as an adjustment of compensation at an agreed lump sum price of $267,843.65 which shall be financed from the contract's contingency fund. A summary of all payments being provided along with supporting documentation is on file.

The change order acts to resolve all outstanding contract issues.

No adjustment of contract time is warranted as this is an administrative change.

Maintenance concurrence is not required, as the change does not affect any permanent roadway features.

Authority to Issue & Approve this change order was received from Head Quarters Construction on April 6, 2011.

ADA Notice: For individuals with sensory disabilities, this document is available in alternate formats. For information call: (916) 654-6410 or TDD (916) 654-3880 or write Records and Forms Management, 1120 N Street, MS-89, Sacramento, CA 95814.

CONCURRED BY:		
Construction Engineer:	Ben Ghafghazi	Date 4/5/11
Bridge Engineer:	Hazzaa El-Mahmoud	Date 4/5/11
Project Engineer:		Date
Project Manager:		Date
FHWA Rep.:		Date
Environmental:		Date
Other (specify):		Date
Other (specify):		Date
District Prior Approval By:		Date
HQ (Issue Approve) By:	Larry Salhaney	Date 4/6/11
Resident Engineer's Signature:		Date 4/7/2011

ESTIMATE OF COST

	THIS REQUEST	TOTAL TO DATE
ITEMS	$0.00	$0.00
FORCE ACCOUNT	$0.00	$0.00
AGREED PRICE	$0.00	$0.00
ADJUSTMENT	$267,843.65	$267,843.65
TOTAL	$267,843.65	$267,843.65

FEDERAL PARTICIPATION

☐ PARTICIPATING ☐ PARTICIPATING IN PART ☑ NONE
☐ NON-PARTICIPATING (MAINTENANCE) ☐ NON-PARTICIPATING

FEDERAL SEGREGATION (if more than one Funding Source or P.I.P. type)
☐ CCO FUNDED PER CONTRACT ☐ CCO FUNDED AS FOLLOWS

FEDERAL FUNDING SOURCE	PERCENT

ADA Notice: For individuals with sensory disabilities, this document is available in alternate formats. For information call: (916) 654-6410 or TDD (916) 654-3880 or write Records and Forms Management, 1120 N Street, MS-89, Sacramento, CA 95814.