Figure 7-4
GUARDRAIL ON NARROW EMBANKMENTS

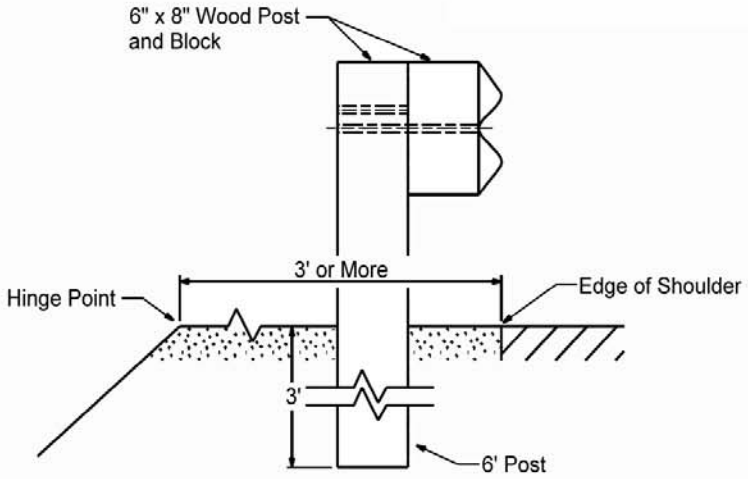

Standard Condition

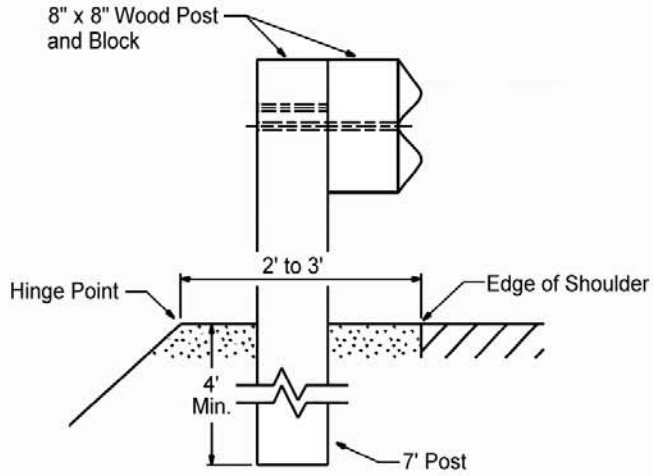

Narrow Embankment or Non-Cohesive Soil

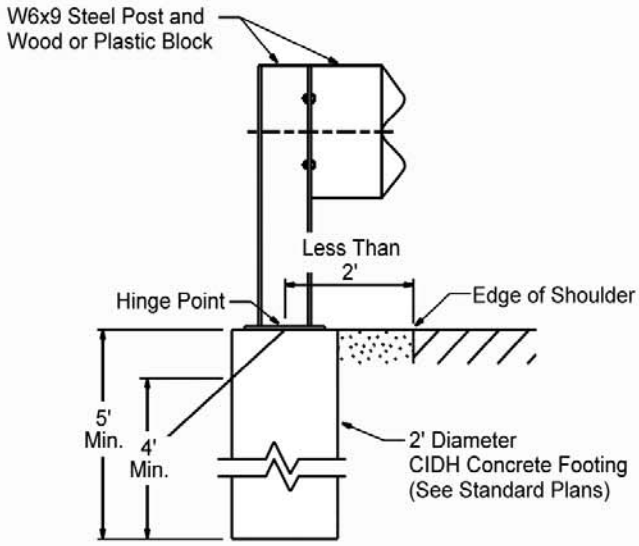

Very Narrow Embankment