CALDECOTT
Fourth Bore Project

Transportation Planning Workshop

Bill Bornman & Ivy Morrison

October 19, 2012

Caltrans

CONTRA COSTA transportation authority

ALAMEDA County Transportation Commission

Today's Presentation

- History
- Purpose & Scope
- Geology, Design, Key Considerations
- Construction
- Partnership & Funding
- Q&A

Caldecott History

- 1903: Kennedy Tunnel opens

- 1937: Bores 1 and 2 open
- 1964: Bore 3 opens

Existing Conditions

- Two southern bores will serve eastbound traffic
- Northern bore and new 2-lane bore will serve westbound traffic

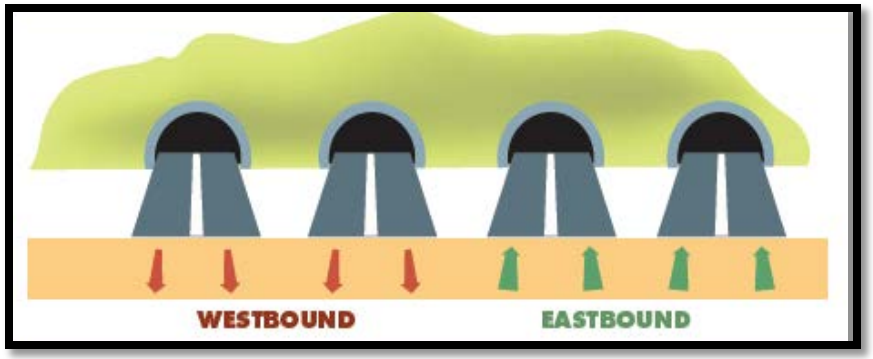

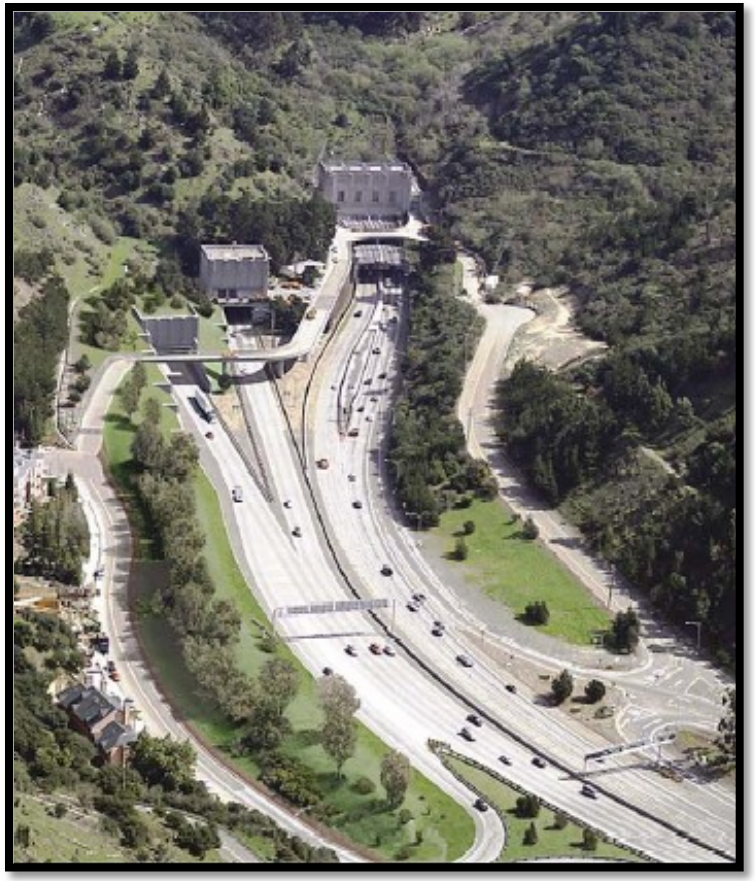

Project Purpose

- Relieve congestion in non-peak direction
- Eliminate daily lane reversals
- Enhance safety
- Provide additional capacity during emergency

Project Scope

- Length: 1033 m
- Width: 12.8 m

Tunnel Cross-section

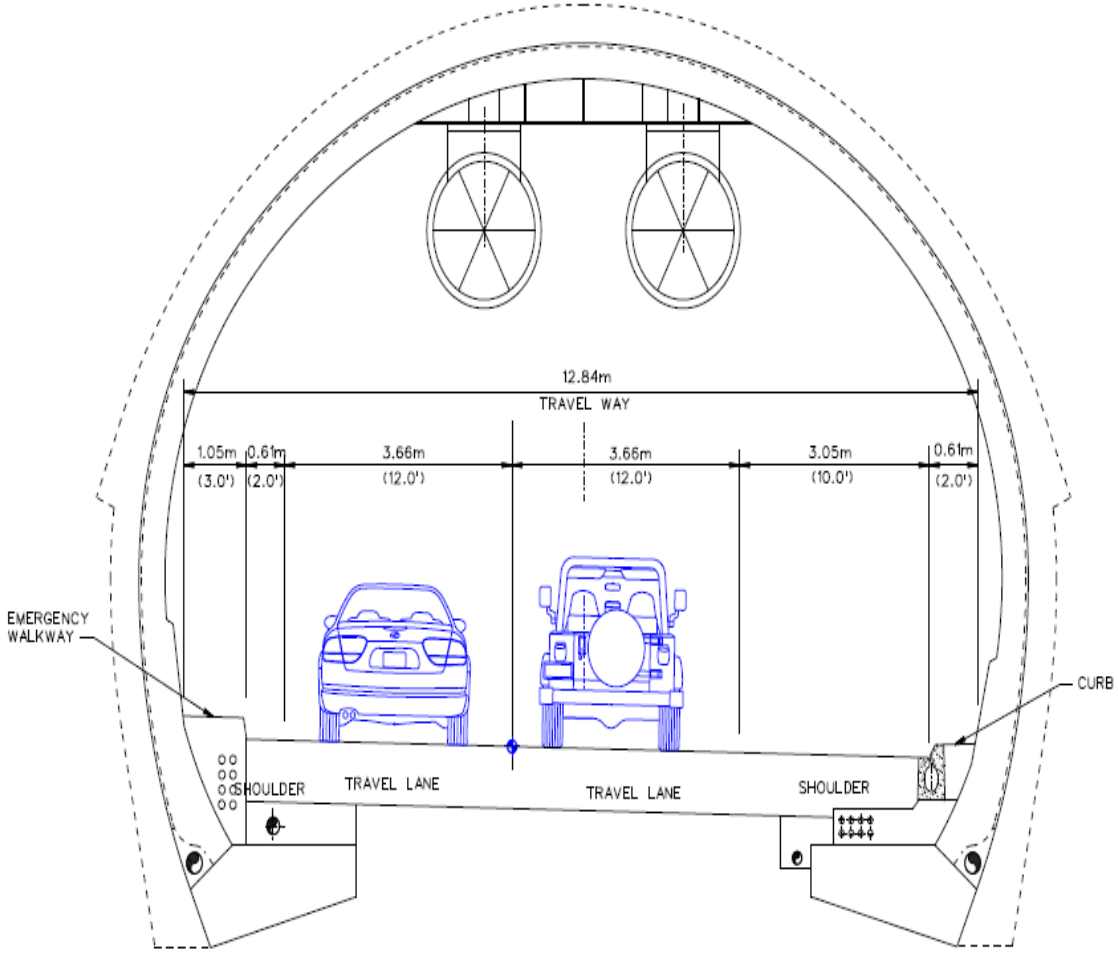

Tunnel Design

- Historical Data
- 11 Borings
- Seismic Criteria
- Fire Hazard Design Criteria

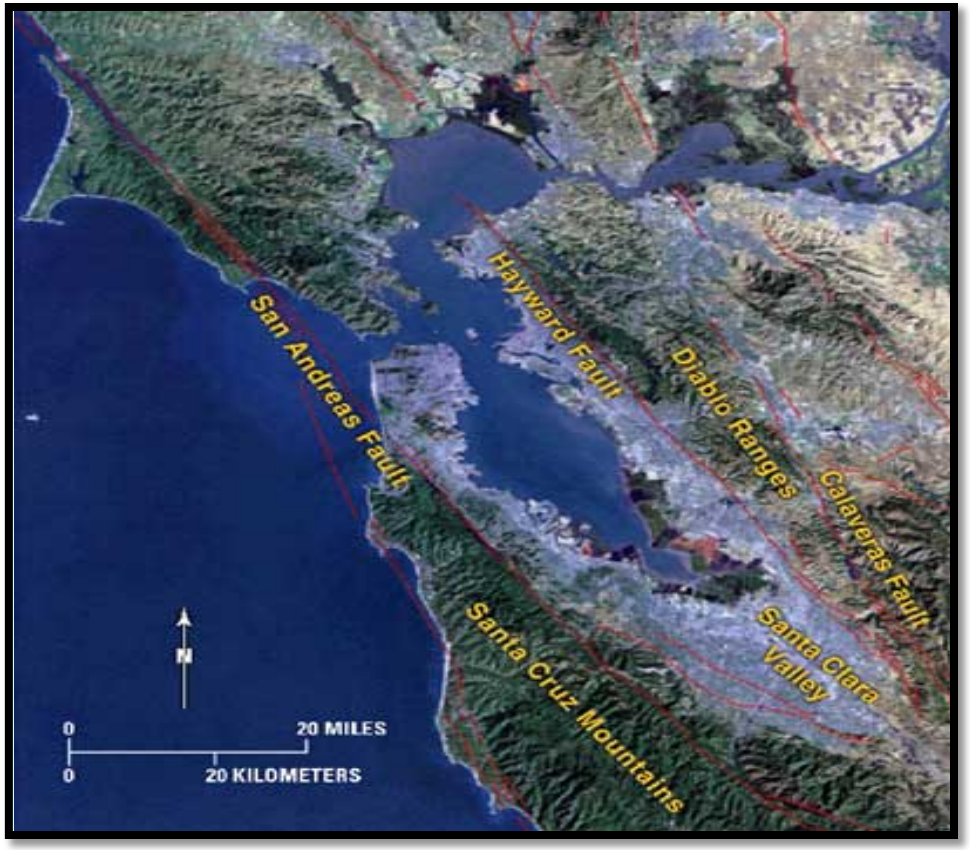

Key Considerations

- Biological Resources
- Paleontology
- Project Neighbors
  - Dust
  - Noise

Biological Resources (Summary)

- 3 to 1 mitigation ratio for effects to species.
- 5 to 1 for oaks, 3 to 1 for all other natives.
- Tree mitigation to occur on-site.
- Wildlife Corridor functions preserved.
- Minimal wetland impacts.

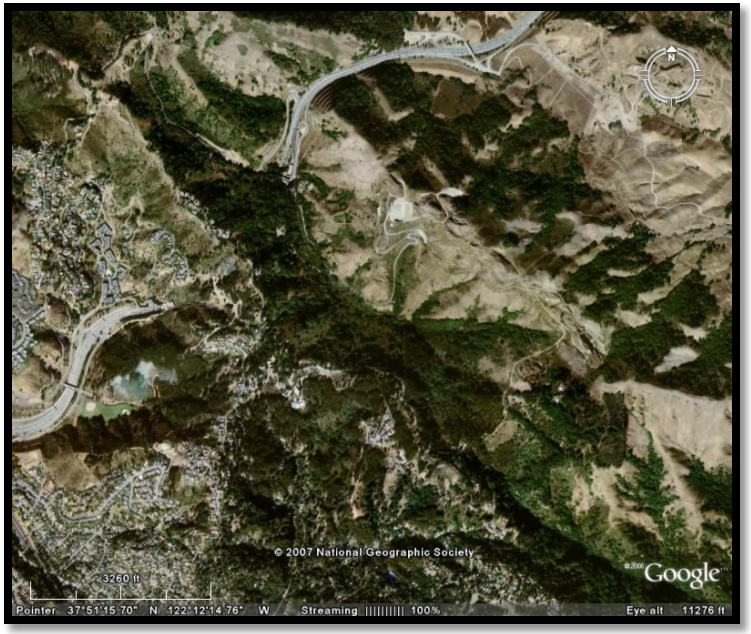

Paleontological Findings

Camel Tooth

Partial Oreodont Skull

Horse Leg Bone

Fossil Leaf

Dust Control Measures

- Temporary stockpiles will be wet down to control dust
- Trucks hauling spoils from site will be covered
- Wheel washes will be provided
- Streets will be swept on a regular basis

Noise Abatement Measures

- Night time construction noise levels will be limited
- Blasting will not be allowed at night
- Concrete batch plant and fans will be enclosed
- Noise of construction activities will be monitored

Geological Profile

First Shale

Chert & Shale

Conglomerate, Sandstone

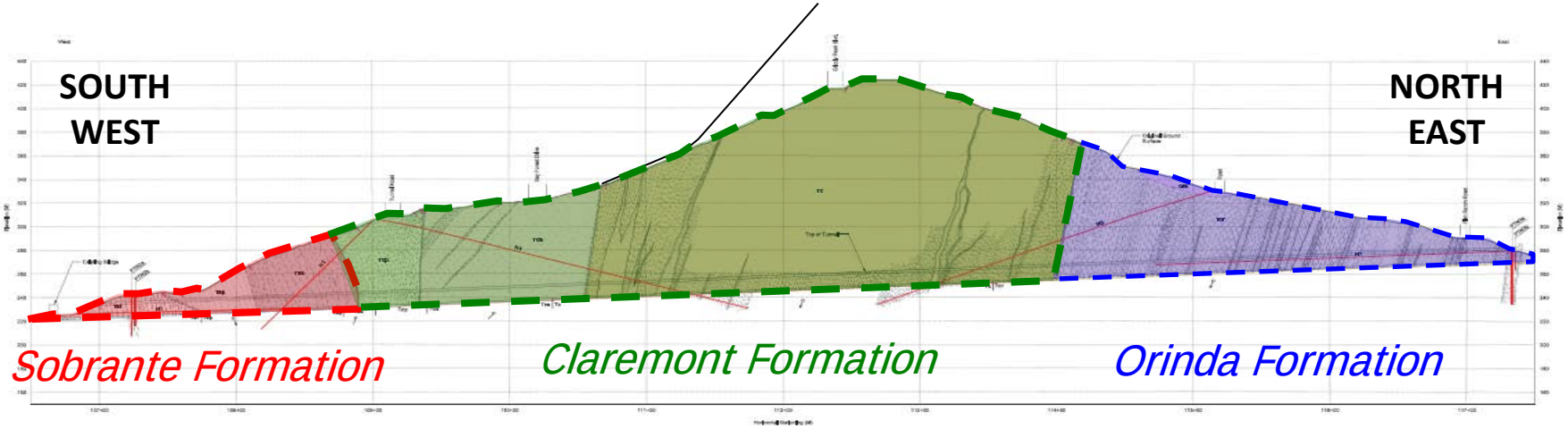

Construction Milestones

- Groundbreaking: January, 2010
- Topheading Breakthrough: Nov. 29, 2011
- Excavation Completion: August 8, 2012
- Final Lining Arch Completion: Late Oct, 2012
- Open to Traffic: Late 2013

Tunneling Method

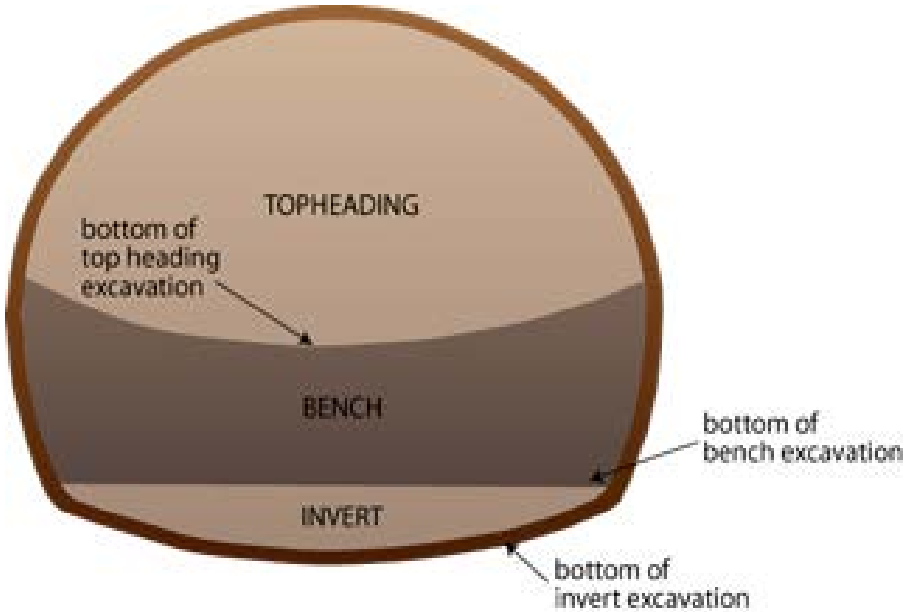

- Sequential excavation method commonly referred to as the New Austrian Tunneling Method (NATM)
- The ground surrounding the tunnel is integral part of the tunnel support system
- Geological conditions at the face are assessed daily and support category is determined

Support Category I

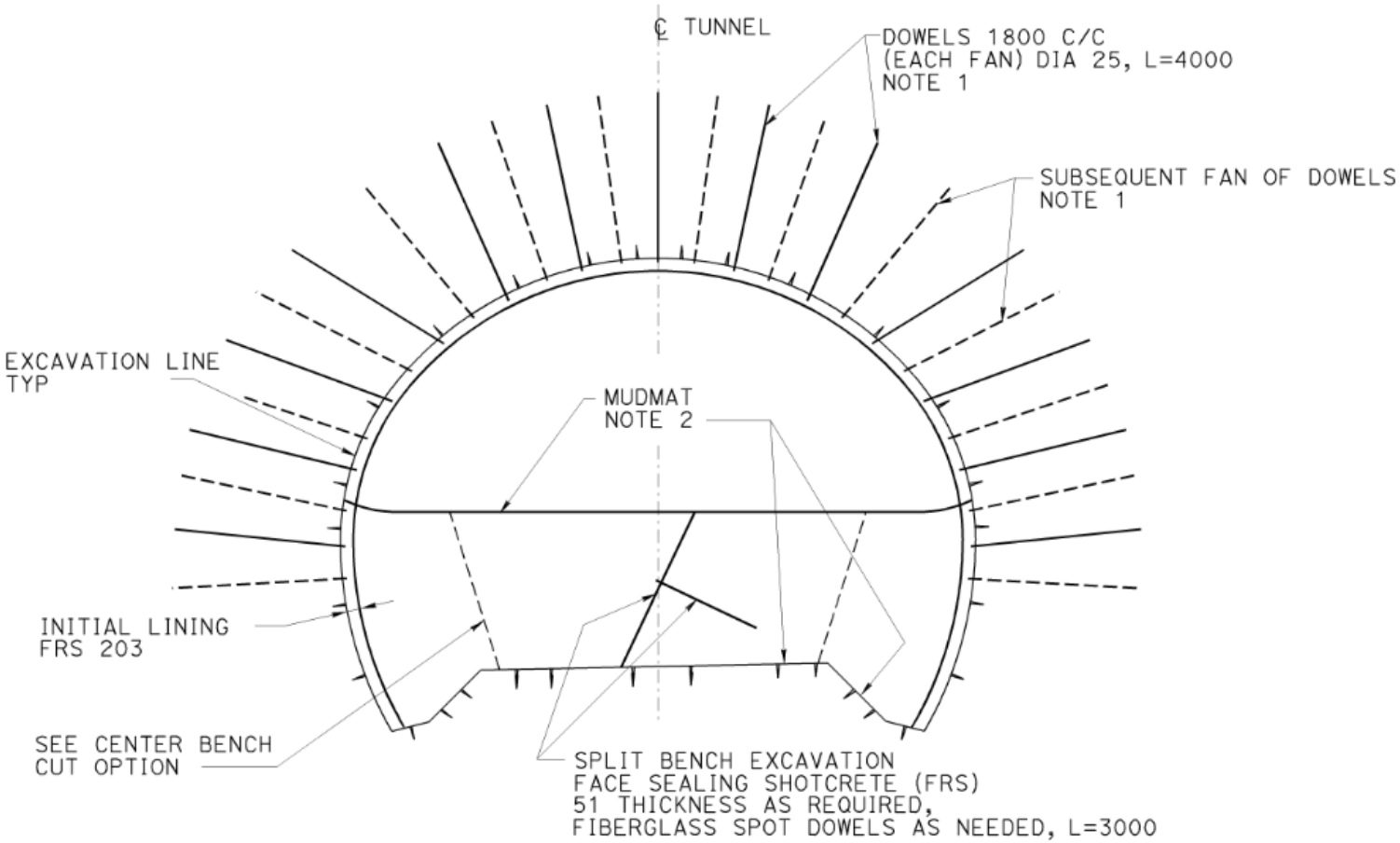

Support Category IV

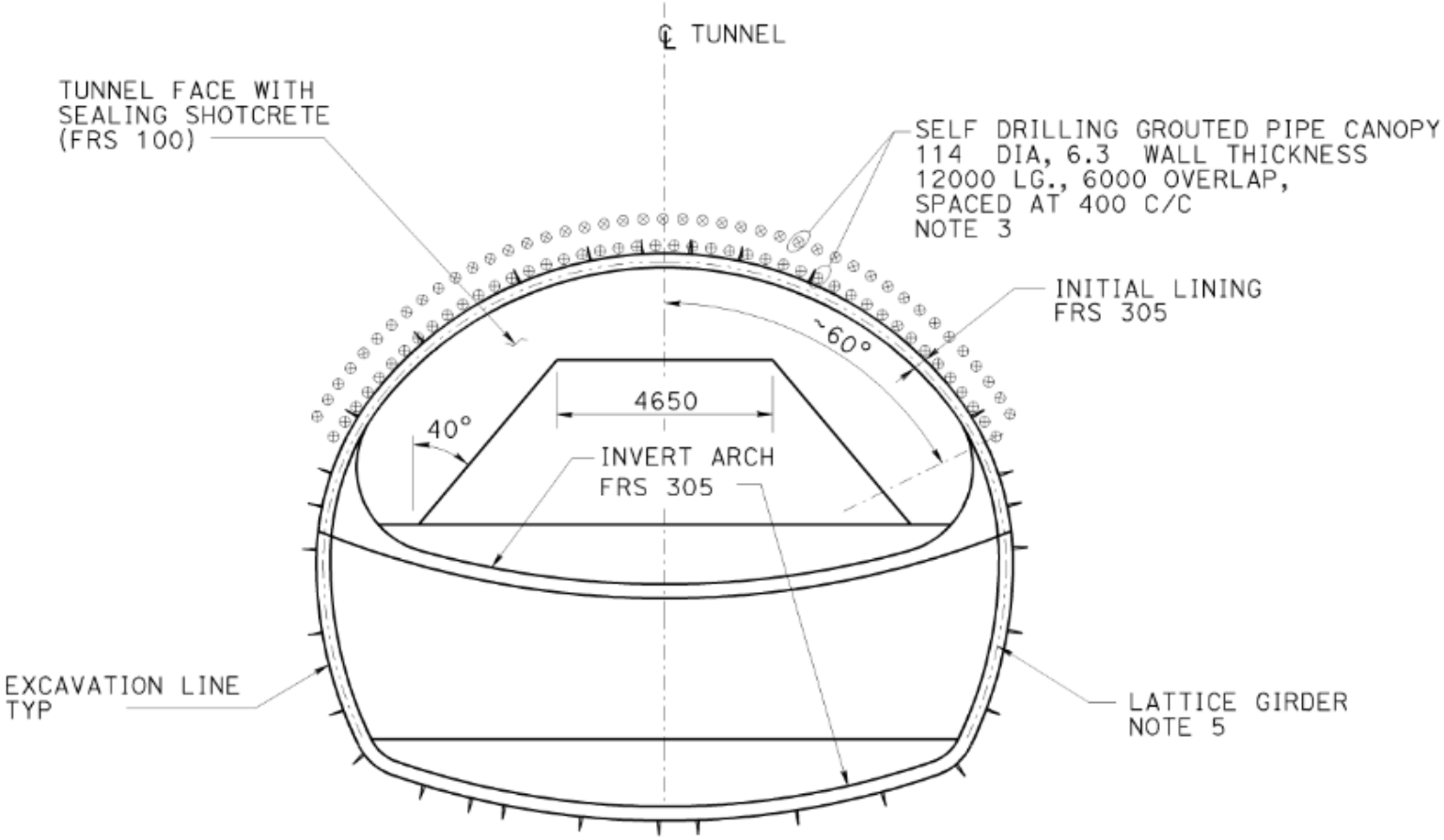

Probing

Roadheader

Equipment

Excavator: Caterpillar 330

Equipment

Shotcrete Machine

Breakthrough!

Alignment

Current

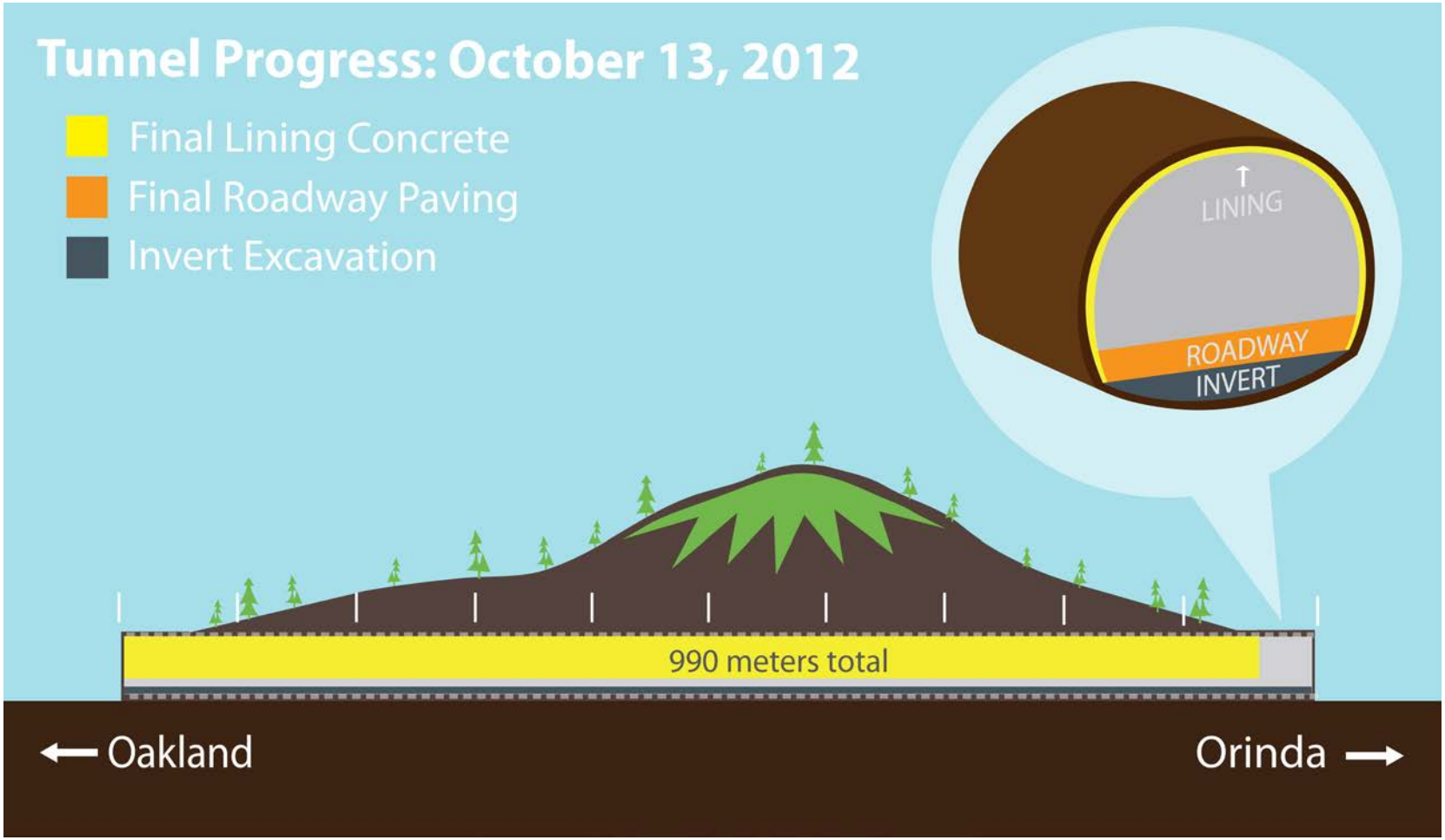
Tunnel Progress: October 13, 2012
Final Lining Concrete
Final Roadway Paving
Invert Excavation
LINING
ROADWAY
INVERT
990 meters total
Oakland
Orinda

Crosspassage Completion

Final Lining

Final Lining

Omc Building

What's Ahead

Partnership

- Caltrans, Contra Costa Transportation Agency (CCTA) and Alameda County Transportation Commission (Alameda CTC)
  - Management Structure
  - Roles and Responsibilities
  - Decision Making
  - Conflict Resolution
- ONE Team
  - Accountability
  - Resources Flexibility
  - Ownership

Funding History

- 1998: MTC Corridor Study
- 2000: Gray Davis' TCRP funds
- 2000: PSR-PDS approved
- 2006: DPR and DEA/EIR approved
- 2007: Neg. Dec/FONSI
- 2009: Advertise/Open Bids/Award Contract
- 2010: Start Construction

Today's Project Costs & Funding

- Total Estimated Cost of four contracts: $402.1 Million
- Funding
  - Federal
  - State
  - Regional
  - Local

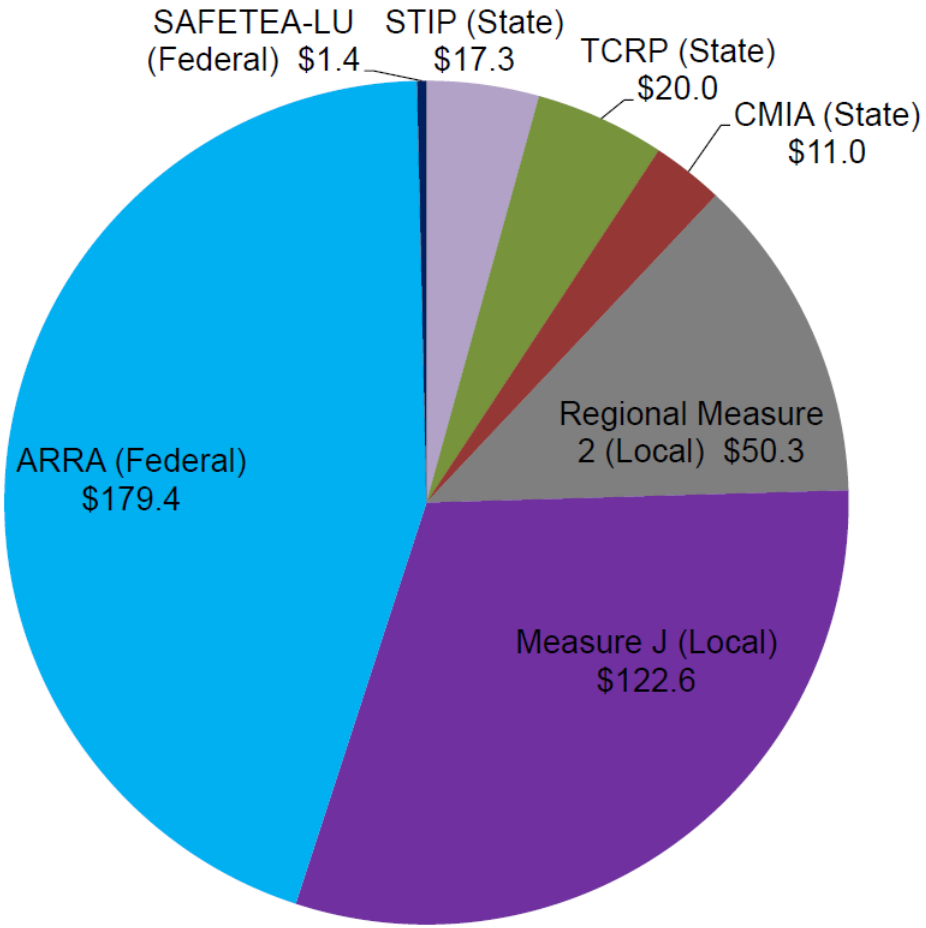

Outreach & Communications

- During Construction:
  - Public Information Officer
  - Website
  - Community meetings
  - Presentations
  - Media

Outreach & Communications

Community Relations

- 100 presentations/site visits to date
- Medallion Design Competition

caldecott fourth bore
MEDALLION
DESIGN COMPETITION

- Travelling photo exhibit

Media Relations

San Francisco Chronicle

KCBS ALL NEWS 740 AM | 106.9 FM

KTVU 2 NEWS KTVU.COM

WIRED

diablo MAGAZINE

The New York Times

Electronic Communications

Website: A Portal to the Portal

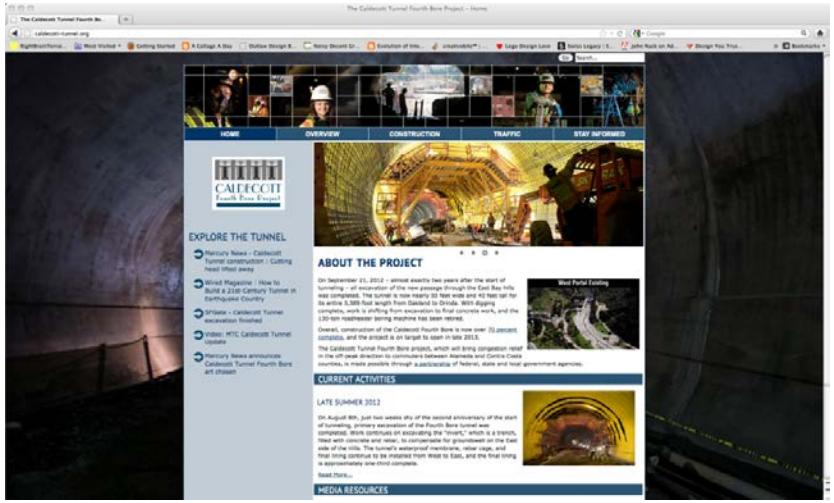

www.caldecott-tunnel.org

eBlasts

The latest Fourth Bore factsheet was emailed to approximately 1,300 elected officials, members of the media, and key stakeholders on Oct. 4. The distribution list continues to grow…

Virtual Tunnel Tours

Stay tuned to the project website

Breakthrough Video

THANK YOU!