E2 SHEAR KEY ANCHOR RODS

(2008) – 96 Rods

Fabrication and Installation Processes

STATE OF CALIFORNIA

DEPARTMENT OF TRANSPORTATION

NOTICE TO CONTRACTORS

AND

SPECIAL PROVISIONS

FOR CONSTRUCTION ON STATE HIGHWAY IN

SAN FRANCISCO COUNTY IN SAN FRANCISCO

FROM 0.6 KM TO 1.3 KM EAST OF THE YERBA BUENA TUNNEL EAST PORTAL

DISTRICT 04, ROUTE 80

For Use in Connection with Standard Specifications Dated JULY 1999, Standard Plans Dated JULY 1999, and Labor Surcharge and Equipment Rental Rates.

CONTRACT NO. 04-0120F4

04-SF-80-13.2/13.9

Bids Open: February 1, 2006
Dated: August 1, 2005

OSD

10-1.47 SPHERICAL BUSHING BEARING (PIER E2)

This work shall consist of fabricating and installing the spherical bushing bearing on Pier E2 in conformance with details shown on the plans and the requirements of these special provisions.

The spherical bushing bearing consists of spherical bushing assembly, bearing top housing, bearing bottom housing, bearing hold down assembly, retaining ring plates, solid shaft, dust cover, base plate, bearing plate, anchor bolts, and assembly bolts. The lubricant shall be self-lubricated and shall be provided for all bronze surfaces and other surfaces as shown on the plans. Bearings shall be anchored in place with high strength non-shrink grout.

Spherical bushing bearings shall be furnished and installed at Pier E2.

GENERAL

Attention is directed to "Steel Structures," of these special provisions for steel casting requirements.

Attention is directed to "Shear Key (Pier E2)," of these special provisions for additional installation requirements.

Attention is directed to "Lubricant and Test," of these special provisions.

The design loads, design rotations, design displacements, and alignment tolerances shall conform to the values as shown on the plans.

WORKING DRAWINGS

The Contractor shall submit working drawings in conformance with the provisions in "Working Drawings," of these special provisions.

Working drawings shall include complete details, information, drawings, and substantiating calculations of the spherical bushing bearing and its components and the method, materials, equipment, and procedures of fabrication and installation that the Contractor proposes to use including the placement of high strength non-shrink grout.

Working drawing submittals shall include the following:

A. Bearing fabrication plans for all bearings including complete details for each component.
B. All ASTM, AASHTO, or other material designations including dust cover and its connection to other bearing components, and retaining ring plates.
C. The bushing wall thickness, fits, and tolerances.
D. Storage and shipping plans including details of handling and supporting of the bearings. Each bearing shipment shall be accompanied by a Certificate of Compliance in conformance with the provisions in Section 6-l.07, "Certificates of Compliance," of the Standard Specifications. The certificate shall state that the materials and fabrication involved comply in all respects to the specifications and data submitted in obtaining approval.
E. Installation plans including the following:

    1. Method, materials, equipment, sequence, detailed procedures, and temporary support details that the Contractor proposes to use for installation of the spherical bushing bearing. The Contractor's proposed spherical bushing bearing installation including the solid shaft press fit shall not damage the lubricant at any given time during the installation. The Contractor's proposed spherical bushing bearing installation procedures and sequences shall be detailed in the superstructure construction sequences as specified in these special provisions.
    2. The Contractor's calculated relative distances for a) relative distance between the centerline of E2 floor beam at box girder (normal to vertical profile) and the centerline of Pier E2 (vertical); distance is measured in the longitudinal direction along the top horizontal surface of concrete crossbeam, and b) relative distance between centerline of longitudinal shear plates (normal to cross slope) and centerline of Pier E2 (vertical); distance is measured in the transverse direction along the top sloped surface of the concrete crossbeam.

F. Details of lifting locations and mechanisms.

A supplement to the working drawings shall include the following:

A. The quality control plan (QCP). The QCP of the spherical bushing bearings shall conform to the requirements in "Quality Control" of these special provisions and shall include descriptions, details, and procedures for the fabrication and installation of the spherical bushing bearings, except that the portion of the QCP for welding shall be submitted separately in conformance with "Welding" in these special provisions.
B. The manufacturer of the spherical bushing bearing shall submit to the Engineer a manual for the bearing inspection, maintenance, and replacement. This manual shall include:

    1. A record of spherical bushing bearing for each component including the tracing of all components during the fabrication and installation of spherical bushing bearing.

2. Recommended life expectancy for each bearing component.
3. Recommended frequency for bearing inspection and maintenance schedule.
4. Procedures and details to perform the bearing inspection and maintenance.
5. List of indication of bearing defects and the associated repair methods, if applicable.
6. Procedures and sequences for bearing replacement including locations of temporary support, estimate of jacking load for each temporary support location, sequences and methods of detensioning anchor bolts, method of debonding between concrete and base plates and anchor bolts, method of removing and replacing bearings, a list of equipment to be used for bearing replacement, and traffic, safety, and environmental impact.

Each working drawing and calculation sheet shall be signed by an engineer who is registered as a Civil Engineer or Mechanical Engineer in the State of California. After complete working drawings and supplement are received by the Engineer, the Contractor shall allow the Engineer 40 days to review the submittal

Upon completion of installation, the Contractor shall submit to the Engineer certification stating that each spherical bushing bearing has been installed in accordance with the approved working drawings and supplements installation procedure.

MATERIALS

The materials specifications of spherical bushing bearing components shall conform to the following table:

Component	ASTM Specifications
Anchor Bolts	A354, Grade BD
Assembly Bolts	A240, Type 316
Bearing Plate	B22-C86300
Spherical Housing	A744, Grade CF-8M
Spherical Ball	B271-C86300
Solid Shaft	Structural Casting, Grade 550
Bearing Bottom Housing	Structural Casting, Grade 550
Bearing Top Housing	Structural Casting, Grade 345
Bearing Hold Down Assembly	Structural Casting, Grade 345

Attention is directed to "Welding" and "Audits" of these special provisions.

Attention is directed to "Lubricant and Test" of these special provisions.

Prestressing operation of anchor bolts shall conform to the requirements in "Prestressing Concrete," elsewhere in these special provisions.

High strength nonshrink grout shall conform to the requirements in "High Strength Nonshrink Grout," elsewhere in these special provisions.

Steel components including plates and anchor bolts shall conform to the details shown on the plans, the provisions in "Steel Structures," of the Standard Specifications, and these special provisions.

Clean and paint spherical bushing bearing shall conform to the requirements in "Clean and Paint Structural Steel (Seismic Joint, Spherical Bushing Bearing, and Shear Key)," of these special provisions.

The bronze alloy for the spherical ball and ring bushing shall be high strength manganese bronze centrifugally cast conforming to the requirements of ASTM Designation: B271-C86300. The stainless steel for the spherical housing shall be centrifugally cast conforming to the requirements of ASTM Designation: A744 Grade CF-8F. All items integral to and for the assembly of the bearing shall be stainless steel conforming to ASTM Designation: A 240, Type 304 or Type 316.

The bushing wall thickness, fits, and tolerances shall be as recommended by the manufacturer and specified in the working drawings and supplement.

QUALITY CONTROL

Quality Control (QC) shall be the responsibility of the Contractor. Quality Control shall be performed by an entity having a line of responsibility distinctly different from that of the manufacturer's fabrication department. As a minimum, the Contractor shall perform inspection and testing prior to fabrication, during fabrication, and after fabrication as specified herein and additionally as necessary to ensure that materials and workmanship conform to the requirements of the contract documents. Quality Control shall apply to each component of the spherical bushing bearing in addition to the assembly, shipping and installation of the bearing.

The QC Inspector shall be the duly designated person who acts for and on behalf of the Contractor for inspection, testing, and quality related matters for all fabrication.

Quality Assurance (QA) is the prerogative of the Engineer. The QA Inspector is the duly designated person who acts for and on behalf of the Engineer.

Each QC Inspector shall be responsible for quality control acceptance or rejection of materials and workmanship.

The Contractor shall provide sufficient number of QC Inspectors to ensure continuous inspection.

The Contractor shall designate in writing a Quality Control Manager (QCM). The QCM shall be responsible directly to the Contractor for the quality of the fabrication, including materials and workmanship, performed by the Contractor and subcontractors.

The QCM shall be the sole individual responsible to the Contractor for submitting and receiving all correspondences, required submittals, and reports to and from the Engineer.

The Contractor shall submit to the Engineer 3 copies of Quality Control Plan (QCP), in conformance with the requirements in "Working Drawings," of these special provisions. As a minimum, each QCP shall include the following:

A. A manual including equipment, testing procedures, and code of safe practices.
B. The names, qualifications, and documentation of certifications for the QCM and all QC Inspectors.
C. An organizational chart showing all QC personnel and their assigned QC responsibilities.
D. The methods and frequencies for performing all required quality control procedures, including QC inspection forms to be used, as required by the specifications including:

    1. All visual inspections.
    2. Tests.
    3. Calibration procedures and calibration frequency for all equipment.

E. Forms to be used for Certificates of Compliance, monthly production logs, and monthly reports.
F. Mill certificates and material certificates.
G. Shipping plan.
H. Installation plan.

Prior to submitting the QCP, a pre-fabrication meeting between the Engineer, Contractor, and fabricator, any entity performing spherical bushing bearing component fabrication or subcontractor to the Fabricator, shall be held to discuss the requirements for the QCP. The pre-fabrication meeting shall be held in San Francisco Bay Area.

After a complete QCP is submitted, the Contractor shall allow the Engineer 10 days to review the submittal. An amended QCP or addendum shall be submitted to, and approved in writing by the Engineer, for proposed revisions to the approved QCP. The Contractor shall allow the Engineer 10 days to complete the review of the amended QCP or addendum.

After final approval of the QCP, amended QCP, or addendum, the Contractor shall submit 7 copies to the Engineer of each of these approved documents.

It is expressly understood that the Engineer's approval of the Contractor's QCP shall not relieve the Contractor of any responsibility under the contract for the successful completion of the work in conformity with the requirements of the plans and specifications. The Engineer's approval shall not constitute a waiver of any requirement of the plans and specifications nor relieve the Contractor of any obligation thereunder, and defective work, materials, and equipment may be rejected notwithstanding approval of the QCP.

A monthly production log for fabrication shall be kept by the QCM for each day that fabrication is performed. The monthly report from each QC Inspector shall be included in the log.

The QCM shall sign and furnish to the Engineer, a Certificate of Compliance in conformance with the provisions in Section 6-1.07, "Certificates of Compliance," of the Standard Specifications for each spherical bushing bearing. The certificate shall state that all of the materials and workmanship incorporated in the work, and all required tests and inspections of this work have been performed in conformance with the details shown on the plans and approved working drawings and the provisions of the Standard Specifications and these special provisions.

FABRICATION AND INSTALLATION

Attention is directed to "Steel Structures," of these special provisions for fabrication and installation of spherical bushing bearings at Pier E2. The Contractor shall also conform to the requirements specified herein.

Conformance with the requirements in SSPC-QP 1, SSPC-QP 2, and SSPC-QP 3 of the "SSPC: The Society for Protective Coatings" will not be required for spherical bushing bearings.

Finish coats will not be required on the bearings.

Each bearing shall be marked for location and orientation in conformance with the approved working drawing and supplement. Bearings shall be secured to shipping skids in a manner that assures protection during transportation and off-loading. Each skid shall be wrapped in moisture proof and dust proof covers at all times until immediately before installation.

The retainer ring, boss plate, pin, and spacer pipe shall conform to ASTM Specifications as shown on the plans.

FABRICATION AND INSTALLATION

Attention is directed to Section, "Steel Structures," of these special provisions for fabrication and installation of tower cross bracing spherical bushing bearings. The Contractor shall also conform to the requirements specified herein.

The coefficient of friction for bearing lubricant shall be equal or less than 0.10.

Conformance with the requirements in SSPC-QP 1, SSPC-QP 2, and SSPC-QP 3 of the "SSPC: The Society for Protective Coatings" will not be required for tower cross bracing spherical bushing bearings.

Finish coats will not be required on the bearings.

The Contractor shall provide the rubber covers to tower cross bracing spherical bushing bearings to seal the bearings with the details in the approved working drawings and supplement.

Each bearing shall be marked for location and orientation in conformance with the approved working drawing and supplement. Bearings shall be secured to shipping skids in a manner that assures protection during transportation and off-loading. Each skid shall be wrapped in moisture proof and dust proof covers at all times until immediately before installation.

Damaged bearings shall be replaced.

A qualified representative of the manufacturer shall be present during installation of all tower cross bracing spherical bushing bearings.

Full compensation for fabricating tower cross bracing spherical bushing bearing shall be considered as included in the contract prices paid per kilogram for furnish structural steel (bridge) (tower), and no separate payment will be made therefor.

Full compensation installing tower cross bracing spherical bushing bearing shall be considered as included in the contract prices paid per kilogram for erect structural steel (bridge) (tower), and no separate payment will be made therefor.

10-1.50 SHEAR KEY (PIER E2)

This work shall consist of fabricating, testing, and installing the shear key on Pier E2 in conformance with details shown on the plans and the requirements of these special provisions.

The shear key consists of shear key housing with nut retainer assemblies, shear key stub, spherical ring with retainer brackets, spherical housing, bearing plates, shim plates, neoprene pads, dust cover, anchor bolts, high-strength bolts, and assembly bolts. The lubricant shall be self-lubricated and shall be provided for all bronze surfaces and other surfaces as shown on the plans. Shear keys shall be anchored in place with high strength non-shrink grout.

The shear key bushing consists of spherical ring, spherical housing, and bearing plates.

Shear keys shall be furnished and installed at Pier E2.

GENERAL

Attention is directed to "Steel Structures," of these special provisions for steel casting requirements.

Attention is directed to "Spherical Bushing Bearing (Pier E2)," of these special provisions for additional installation requirements.

The design loads, design rotations, design displacements, and alignment tolerances shall conform to the values shown on the plans.

WORKING DRAWINGS

The Contractor shall submit working drawings in conformance with the provisions in "Working Drawings," of these special provisions.

Working drawings shall include complete details, information, drawings, and substantiating calculations of the shear key and its components and the method, materials, equipment, and procedures of fabrication and installation that the Contractor proposes to use including the placement of high strength non-shrink grout.

Working drawing submittals shall include the following:

A. Shear key fabrication plans including complete details for each component.
B. All ASTM, AASHTO, or other material designations including dust cover and its connection to other shear key components.
C. Storage and shipping plans including details of handling and supporting of the shear keys. Each shear key shipment shall be accompanied by a Certificate of Compliance in conformance with the provisions in Section 6-l.07, "Certificates of Compliance," of the Standard Specifications. The certificate shall state that the materials and fabrication involved comply in all respects to the specifications and data submitted in obtaining approval.
D. Installation plans including the following:

1. Method, materials, equipment, sequence, detailed procedures, and temporary support details that the Contractor proposes to use for installation of the shear key. The Contractor's proposed shear key installation procedures and sequences shall be detailed in the superstructure construction sequences as specified elsewhere in these special provisions.
2. The Contractor's calculated relative distances for a) relative distance between the centerline of Pier E2 floor beam at box girder (normal to vertical profile) and the centerline of Pier E2 (vertical); distance is measured in the longitudinal direction along the top horizontal surface of concrete crossbeam, and b) relative distance between centerline of box girder (normal to cross slope) and centerline of Pier E2 (vertical); distance is measured in the transverse direction along the top sloped surface of the concrete crossbeam.

E. Details of lifting locations and mechanisms.

A supplement to the working drawings shall include the following:

A. The quality control plan (QCP). The QCP of the shear keys shall conform to the requirements in "Quality Control" of these special provisions and shall include descriptions, details, and procedures for the fabrication and installation of the shear keys, except that the portion of the QCP for welding shall be submitted separately in conformance with "Welding" of these special provisions.
B. The Contractor shall submit to the Engineer a manual for the shear key inspection, maintenance, and replacement. This manual shall include:

1. A record of shear key for each component including the tracing of all components during the fabrication and installation of shear key.
2. Recommended life expectancy for each shear key component.
3. Recommended frequency for shear key inspection and maintenance schedule.
4. Procedures and details to perform the shear key inspection and maintenance.
5. List of indication of shear key defects and the associated repair methods, if applicable.
6. Procedures and sequences for shear key bushing replacement, a list of equipment to be used for shear key bushing replacement, and traffic, safety, and environmental impact.

Each working drawing and calculation sheet shall be signed by an engineer who is registered as a Civil Engineer or Mechanical Engineer in the State of California.

After complete working drawings and supplement are received by the Engineer, the Contractor shall allow the Engineer 40 days to review the submittal.

Upon completion of installation, the Contractor shall submit to the Engineer certification stating that each shear key has been installed in accordance with the approved working drawings and supplements installation procedure.

MATERIALS

The materials specifications of shear key components shall conform to the following table:

Component	ASTM Specifications
Shear Key Housing, Shear Key Stub, Spherical Ring	Structural Casting, Grade 345
Spherical Housing	High Strength Manganese Bronze Centrifugally Cast, B271-C86300
Anchor Bolts	A354, Grade BD
Assembly Bolts	A240, Type 316
High Strength Bolts	A 325M
Bearing Plate & Shim Plate	A 709M Grade 345

Attention is directed to "Welding" and "Steel Audits" of these special provisions.

Attention is directed to "Lubricant and Test" of these special provisions.

Prestressing operation of anchor bolts shall conform to the requirements in "Prestressing Concrete" of these special provisions.

High strength nonshrink grout shall conform to the requirements in "High Strength Nonshrink Grout" of these special provisions.

Steel components including plates and anchor bolts shall conform to the details shown on the plans, the provisions in "Steel Structures," of the Standard Specifications, and these special provisions.

Neoprene pads shall conform to Section 51-1.145, "Strip Waterstops," of the Standard Specifications and these special provisions. Neoprene pads shall have the following properties:

A. Neoprene shall have a durometer hardness between 25-45
B. The compressive strength shall not exceed 1000 kPa at 50% compression.

A Certificate of Compliance conforming to the provisions in Section 6-1.07, "Certificates of Compliance," shall be furnished to the Engineer certifying that the neoprene to be furnished conforms to the above provisions. The Certificate of Compliance shall be supported by a certified copy of the results of tests performed by the manufacturer on the neoprene pads.

Clean and paint shear key shall conform to the requirements in "Clean and Paint Structural Steel (Seismic Joint, Spherical Bushing Bearing, and Shear Key)," of these special provisions.

The bronze alloy for the spherical housing shall be high strength manganese bronze centrifugally cast conforming to the requirements of ASTM Designation: B271-C86300. The mating surfaces of the spherical ring and bearing plate shall be stainless steel weld overlay conforming to the requirements of ASTM Designation: A240 Type 316. All items integral to and for the assembly of the shear key bushing shall be stainless steel conforming to ASTM Designation: A 240, Type 304 or Type 316.

QUALITY CONTROL

Quality Control (QC) shall be the responsibility of the Contractor. Quality Control shall be performed by an entity having a line of responsibility distinctly different from that of the manufacturer's fabrication department. As a minimum, the Contractor shall perform inspection and testing prior to fabrication, during fabrication, and after fabrication as specified herein and additionally as necessary to ensure that materials and workmanship conform to the requirements of the contract documents. Quality Control shall apply to each component of the shear key in addition to the assembly, shipping and installation of the shear key.

The QC Inspector shall be the duly designated person who acts for and on behalf of the Contractor for inspection, testing, and quality related matters for all fabrication.

Quality Assurance (QA) is the prerogative of the Engineer. The QA Inspector is the duly designated person who acts for and on behalf of the Engineer.

Each QC Inspector shall be responsible for quality control acceptance or rejection of materials and workmanship.

The Contractor shall provide sufficient number of QC Inspectors to ensure continuous inspection.

The Contractor shall designate in writing a Quality Control Manager (QCM). The QCM shall be responsible directly to the Contractor for the quality of the fabrication, including materials and workmanship, performed by the Contractor and subcontractors.

The QCM shall be the sole individual responsible to the Contractor for submitting and receiving all correspondences, required submittals, and reports to and from the Engineer.

The Contractor shall submit to the Engineer 3 copies of Quality Control Plan (QCP), in conformance with the requirements in "Working Drawings," of these special provisions. As a minimum, each QCP shall include the following:

A. A manual including equipment, testing procedures, and code of safe practices.
B. The names, qualifications, and documentation of certifications for the QCM and all QC Inspectors.
C. An organizational chart showing all QC personnel and their assigned QC responsibilities.
D. The methods and frequencies for performing all required quality control procedures, including QC inspection forms to be used, as required by the specifications including:

    1. All visual inspections.
    2. Tests.
    3. Calibration procedures and calibration frequency for all equipment.

E. Forms to be used for Certificates of Compliance, monthly production logs, and monthly reports.
F. Mill certificates and material certificates.
G. Shipping plan.
H. Installation plan.

Prior to submitting the QCP, a pre-fabrication meeting between the Engineer, Contractor, and fabricator, any entity performing shear key component fabrication or subcontractor to the Fabricator, shall be held to discuss the requirements for the QCP. The pre-fabrication meeting shall be held in San Francisco Bay Area.

persons or entities hired by subcontractors who will provide other services or materials for the project, and shall have the following:

A. A tensile testing machine capable of breaking the largest size of reinforcing bar to be tested.
B. Operators who have received formal training for performing the testing requirements of ASTM Designation: A 970/A 970M.
C. A record of annual calibration of testing equipment performed by an independent third party that has 1) standards that are traceable to the National Institute of Standards and Technology, and 2) a formal reporting procedure, including published test forms.

The Engineer shall be notified in writing when any lots of headed bar reinforcement are ready for testing. The notification shall include the number of lots to be tested and the location where the tests are to be conducted. After notification has been received, test samples will be randomly selected by the Engineer from each production lot of headed bar reinforcement which is ready for shipment to the jobsite. If epoxy coating is required, test samples will be taken after the headed bar reinforcement has been prepared for epoxy coating. The Engineer will be at the testing site within a maximum of one week after receiving written notification that the samples are at the testing site and ready for testing. In the event the Engineer fails to be present at the testing site within the time allowed, and if, in the opinion of the Engineer, completion of the work is delayed or interfered with by failure of the Engineer to be present at the testing site, the Contractor will be compensated for any resulting loss in the same manner as provided for in Section 8-1.09, "Right of Way Delays," of the Standard Specifications.

A minimum of 3 samples from each production lot shall be tested. One tensile test shall be conducted on each sample.

Tensile tests shall conform to the requirements specified in ASTM Designation: A 970/A 970M, Section 7, except that at rupture, there shall be visible signs of necking in the reinforcing bar 1) at a minimum distance of one bar diameter away from the head to bar connection for friction welded headed bar reinforcement, or 2) outside the affected zone for integrally forged headed bar reinforcement.

The affected zone for integrally forged headed bar reinforcement is the portion of the reinforcing bar where any properties of the bar, including the physical, metallurgical, or material characteristics, have been altered during the manufacturing process.

If one of the test specimens fails to meet the specified requirements, one retest shall be performed on one additional sample, selected by the Engineer, from the same production lot. If the additional test specimen, or if more than one of the original test specimens fail to meet these requirements, all headed bar reinforcement in the lot represented by the tests will be rejected in conformance with the provisions in Section 6-1.04, "Defective Materials," of the Standard Specifications.

A Production Test Report for all testing performed on each lot shall be prepared by the independent testing laboratory and submitted to the Engineer as specified herein. The report shall be signed by an engineer who represents the laboratory and is registered as a Civil Engineer in the State of California. The report shall include the following information for each set: contract number, bridge number, lot number, bar size, type of headed bar reinforcement, physical conditions of test sample, any notable defects, limits of affected zone, location of visible necking area, and the ultimate strength of each headed bar.

Each unit of headed bar reinforcement in a production lot to be shipped to the site shall be tagged in a manner such that production lots can be accurately identified at the jobsite. All unidentified headed bar reinforcement received at the jobsite will be rejected.

MEASUREMENT AND PAYMENT

Full compensation for headed bar reinforcement shall be considered as included in the contract price paid per kilogram for bar reinforcing steel (bridge) and no separate payment will be made therefor.

Full compensation for epoxy-coated headed bar reinforcement shall be considered as included in the contract price paid per kilogram for bar reinforcing steel (epoxy-coated) (bridge) and no separate payment will be made therefor.

10-1.59 STEEL STRUCTURES

Construction of steel structures shall conform to the provisions in Section 55, "Steel Structures," of the Standard Specifications and these special provisions.

Fabricators and suppliers shall be certified under the AISC Quality Certification Program, Category Cbr, Major Steel Bridges, with endorsement F, Fracture Critical members, except that certification will not be required for fabrication of the tower strut façade and tower skirt. Alternatively, ISO 9001:2000 certification standard may be substituted for the AISC Quality Certification Program.

Details of box girder and crossbeam connections shall conform to the AASHTO Standard Specifications for Highway Bridges, unless otherwise shown on the plans.

Attention is directed to "Accelerated Working Drawings Submittal," of these special provisions.

A. Minimum tension shall be verified using the "Pre-Installation Verification Turn-of-the-Nut Method," of the "Structural Bolting Handbook," published by the Steel Structures Technology Center, Incorporated, except that the required rotation shall be as given in Table 8.2. of this section and the required tension shall be as shown in the following table:

Pre-Installation Verification
Required Tension, N*

Bolt Size, mm	A325M Bolts	A490M Bolts
M16	96 000	120 000
M20	149 000	188 000
M22	185 000	232 000
M24	215 000	270 000
M27	280 000	351 000
M30	342 000	428 000
M36	499 000	625 000
*The above values are 5% higher than the required pretension values used for design, actual installation and inspection, rounded to the nearest kN.		

B. Rotational-capacity tests in accordance with the requirements in Section 11.5.6.4.2 "Rotational-Capacity Tests," of the AASHTO LRFD Bridge Construction Specifications, except that Table 11.5.6.4.1-2 "Nut Rotation from the Snug Condition," is replaced by Table 8.2. of this section.

Test results shall confirm both the minimum bolt tension and the rotational capacity of the bolts. If either test fails, the Contractor shall modify the nut rotation in Table 8.2. of this section until the requirements of both tests are satisfied. No adjustment in compensation will be allowed for modifications to the nut rotations as necessary to satisfy test requirements. Revisions to Table 8.2. shall be approved by the Engineer prior to bolting operations.

The Engineer will randomly sample and perform quality assurance testing of high strength fasteners. Samples will be obtained at locations chosen by the Engineer. The Contractor shall provide the number of bolts specified below to the Engineer for quality assurance testing:

Bolt Sampling Size

Lot Size (No. of Bolts)	Sample Size (No. of Bolts)
2 to 15	3
16 to 25	4
26 to 50	5
51 to 90	7
91 to 150	8
151 to 280	9
281 to 10,000	12
10,001 to 500,000	16
500,001 and over	20

Steel fasteners, designated on the plans as A 354, Grade BC, and A 354, Grade BD, shall conform to the requirements of ASTM Designation: A 354. Steel fastener components for steel fasteners designated as A 354 shall include a bolt, nut and hardened washer. Nuts for steel fasteners designated as A 354 shall conform to Section 55-2.01, "Description," of the Standard Specifications.

Steel fasteners designated on the plans as A 354, Grade BD shall be dry blast cleaned in accordance with the provisions of Surface Preparation Specification No. 10, "Near White Blast Cleaning," of the "SSPC: The Society for Protective Coatings.

Steel fasteners designated on the plans as A 354, Grade BC, and A 354, Grade BD, shall be galvanized in accordance with the requirements in Section 75-1.05, "Galvanizing," of the Standard Specifications and shall conform to the requirements in ASTM Designation: A123 for bolts and ASTM Designation: A153 for nuts and hardware. Steel fastener assemblies designated as A354, Grade BD, shall be galvanized within 4 hours of being dry blast cleaned.

The Contractor shall submit certified test reports showing that the A 354, Grade BD fasteners conform to the provisions in ASTM Designation: A 143.

Steel fasteners, designated on the plans as A 354, Grade BC, and A 354, Grade BD, shall conform to the requirements of ASTM Designation: A 354. Steel fastener components for steel fasteners designated as A 354 shall include a bolt, nut and hardened washer. Nuts for steel fasteners designated as A 354 shall conform to Section 55-2.01, "Description," of the Standard Specifications. Nuts shall be zinc coated and be furnished with a dry lubricant conforming to Supplementary Requirement S1 and S2 in ASTM Designation: A 563.

Steel fasteners designated on the plans as A 354, Grade BD shall be tensioned not less than the value shown on the plans. Prior to installation, the Contractor shall submit to the Engineer for approval the methods and equipment to be used to tension steel fasteners designated as A354, Grade BD in accordance with Section 55-1.02, "Drawings," of the Standard Specifications. Working drawings shall include methods and equipment to be used to evaluate: 1) the presence of a lubricant, 2) the efficiency of the lubricant, and 3) the compatibility of the high strength steel bolt, nut and hardened washer.

Except where sub-punching is permitted, bolt holes shall be drilled or reamed, unless otherwise shown on the plans.

Punching

The first paragraph of Section 55-3.14A(1) "Punching," of the Standard Specifications shall not apply.

Punching or sub-punching of Grade 250 structural steel where the material is thicker than 16 mm will not be permitted. Punching or sub-punching of high-strength structural steel where the material is thicker than 12 mm will not be permitted.

Prestressing High-Strength Bolts

High-strength A354 bolts shall be tensioned by means of hydraulic jacks so that the force in the bolts shall not be less than the value shown on the plans.

The maximum temporary tensile stress (jacking stress) in high-strength bolts shall not exceed 75 percent of the specified minimum ultimate tensile strength of the material. Prestressing forces in high-strength bolts shall consider all losses, including creep of steel, losses due to sequence of stressing, and other losses specific to the method or system of prestressing used by the Contractor.

Hydraulic jacks used for prestressing high-strength bolts shall be calibrated in accordance with the requirements in Section 50-1.08, "Prestressing," of the Standard Specifications.

Final prestressing high strength A354 bolts at the tower anchorage shall be performed after the full dead load is transferred to the cable system.

ASSEMBLY

The method of erection of the suspended structure and tower shall be determined by the Contractor to meet the seismic design load criteria and ensure control of box girder and tower deflections due to wind induced oscillations.

The Contractor shall carry out the necessary structural analyses for the erection procedure to demonstrate the adequacy of the procedure. Details of these analyses and of any supplementary damping or other measures shall be submitted to the Engineer for review and approval.

Wind pressure effects during erection shall be calculated using a gust wind appropriate to a return period of not less than 25 years and shall allow for variation of speed with height per ANSI ASCE 7-95. The 25-year wind corresponds to a 77 mph one-hour average wind speed (and a corresponding 3-second gust wind speed of 100 mph) at deck elevation of 50 meters, as well as a critical flutter wind speed threshold of 112 mph based on a 1000-year return period. The Contractor shall provide temporary connections between adjacent lift sections in order to ensure sufficient torsional stiffness of the suspended structure. The Contractor shall also provide the proper support of the suspended structure during all stages of erection. The Contractor shall similarly ensure control of tower deflections due to wind-induced oscillations at all stages of erection and shall provide holdback stays or other damping devices as necessary. All such temporary measures shall be approved by the Engineer.

Wind design loads may be reduced during lifting operations.

Seismic loading during erection shall conform to the seismic loading requirements specified in "TEMPORARY TOWERS," subsection "TEMPORARY TOWER DESIGN," subsection "Seismic Design Loads," of these special provisions.

The erection procedure shall be such that the maximum stresses in any part of the permanent structure do not cause any permanent deformation or damage. Appropriate values of loads and safety factors for erection loading conditions shall be submitted by the Contractor to the Engineer for review and approval.

The details of any fastenings which the Contractor may require in any part of the permanent works for erection, and the procedure for their removal, shall be submitted to the Engineer for approval.

Tower

Tower lifts shall be in lengths as indicated on the plans. Exterior plates of the tower shafts shall be fabricated with direction of rolling aligned along the vertical direction of the tower. Within each lift, the number of transverse splices of the

Caltrans now has a web site! To get to the web site, go to: http://www.dot.ca.gov

DIST.	COUNTY	ROUTE	KILOMETER POST TOTAL PROJECT	SHEET NO.	TOTAL SHEETS
04	SF	80	13.2/13.9	510	1204

REGISTERED ENGINEER - CIVIL
12-6-04
PLANS APPROVAL DATE

REGISTERED PROFESSIONAL ENGINEER Alex E. Sanjines No. C 051153 Exp. 9/30/07 CIVIL STATE OF CALIFORNIA

The State of California or its officers or agents shall not be responsible for the accuracy or completeness of electronic copies of this plan sheet.

T.Y. LIN / MOFFATT & NICHOL
825 BATTERY STREET
SAN FRANCISCO, CA 94111

5 Caltrans Metric

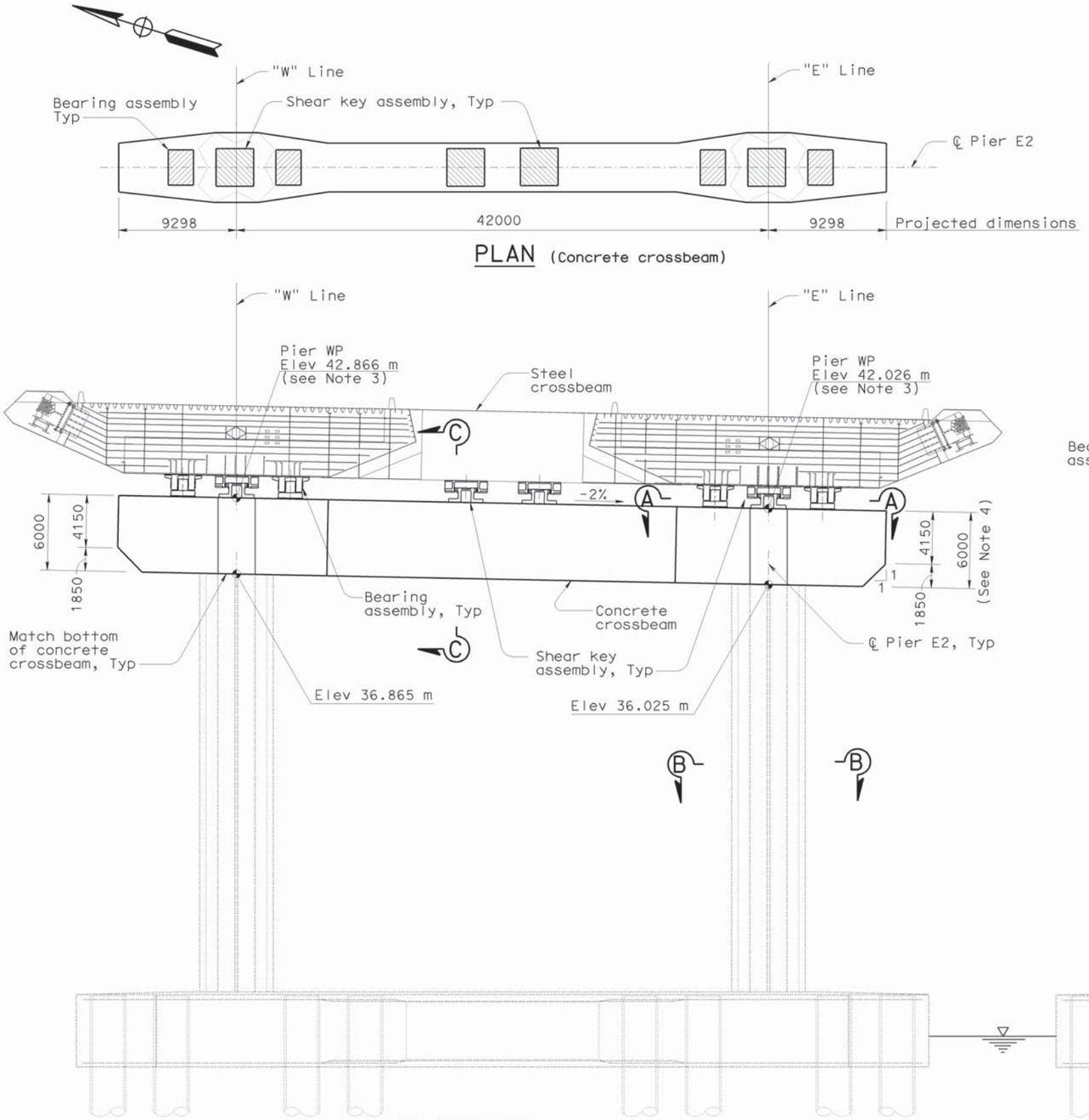

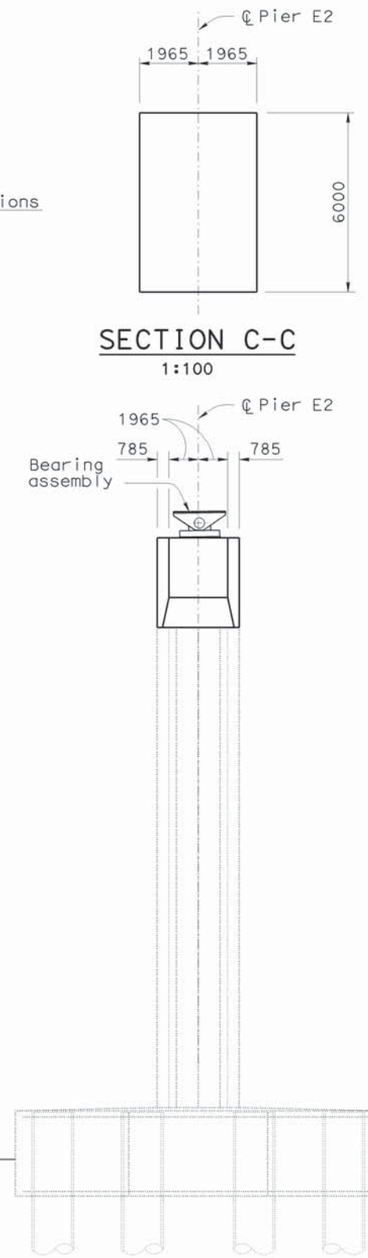

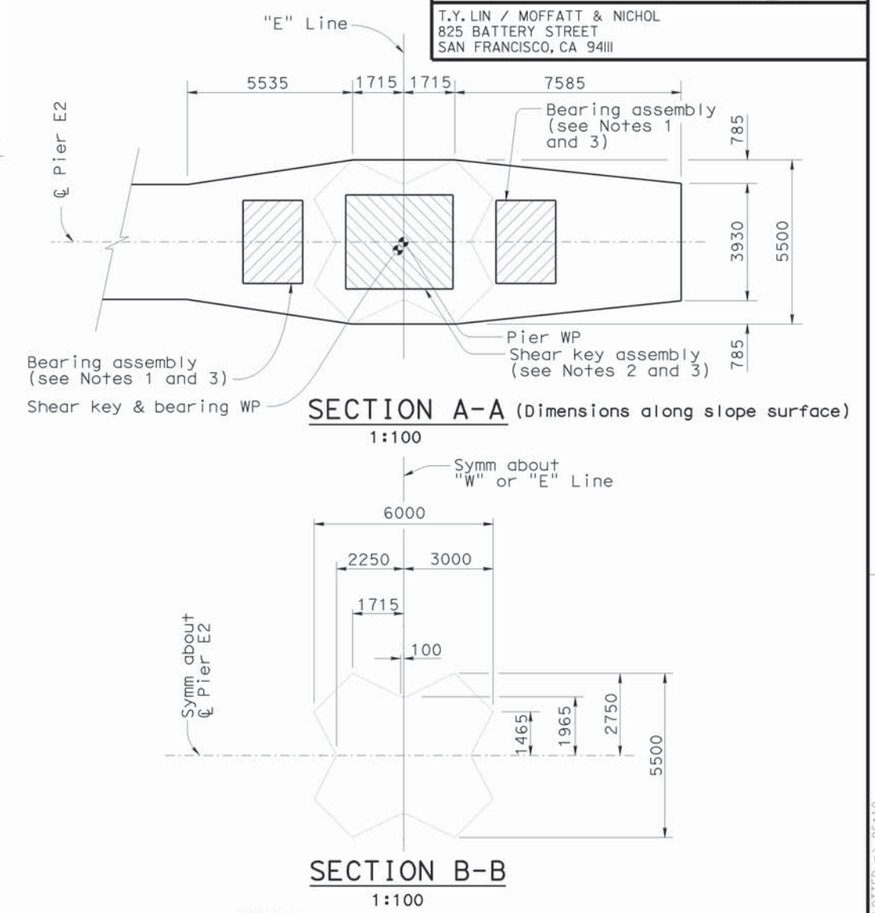

NOTES:

1. For pier E2 bearing details, see "Pier E2 Bearing Details" sheets.
2. For pier E2 shear key details, see "Pier E2 Shear Key Details" sheets.
3. For pier E2 bearing and shear key location, see "Pier E2 Bearing and Shear Key Layout" sheet.
4. Dimensions are normal to the 2% crossbeam slope.
5. For "Pier E2 Details" sheets, the Contractor shall verify all controlling field dimensions before ordering or fabricating any material.

5 **REVISED PER ADDENDUM NO. 5 DATED DECEMBER 21, 2005**

ALL DIMENSIONS ARE IN MILLIMETERS UNLESS OTHERWISE SHOWN

100 % PS&E

USERNAME => friehard DATE PLOTTED => 15-DEC-2005 TIME PLOTTED => 06:10

R. Valizadeh/V.Toan/Y.L./W.L./F.C.
DESIGN OVERSIGHT
SIGN OFF DATE 12/07/05

	BY	CHECKED
DESIGN	A. Sanjines	J. Chan
DETAILS	R. Xu	J. Chan
QUANTITIES	R. Xu	C. Bernardo

PREPARED FOR THE STATE OF CALIFORNIA DEPARTMENT OF TRANSPORTATION

R. Manzanarez
PROJECT ENGINEER

BRIDGE NO. 34-0006L/R
KILOMETER POST 13.2/13.9

SAN FRANCISCO OAKLAND BAY BRIDGE
EAST SPAN SEISMIC SAFETY PROJECT
SELF-ANCHORED SUSPENSION BRIDGE
(SUPERSTRUCTURE & TOWER)

PIER E2 DETAILS NO.1

Rev. Dates 5-18-98

ORIGINAL SCALE IN MILLIMETERS FOR REDUCED PLANS 0 10 20 30 40 50 60 70 80 90 100

CU 04
EA 0120F1

DISREGARD PRINTS BEARING EARLIER REVISION DATES

REVISION DATES (PRELIMINARY STAGE ONLY) 01/15/99 05/15/99 08/02/99 05/24/01 04/08/02 07/24/02 12/24/02 12/07/05

SHEET 93 OF

FILE => aepir01e.add

Caltrans now has a web site! To get to the web site, go to: http://www.dot.ca.gov

Caltrans Metric

DIST.	COUNTY	ROUTE	KILOMETER POST TOTAL PROJECT	SHEET NO.	TOTAL SHEETS
04	SF	80	13.2/13.9	511R1	1204

REGISTERED ENGINEER - CIVIL

12-6-04
PLANS APPROVAL DATE

REGISTERED PROFESSIONAL ENGINEER Alex E. Sanjines No. C 051153 Exp. 9/30/07 CIVIL STATE OF CALIFORNIA

The State of California or its officers or agents shall not be responsible for the accuracy or completeness of electronic copies of this plan sheet.

T.Y. LIN / MOFFATT & NICHOL
825 BATTERY STREET
SAN FRANCISCO, CA 94111

Caltrans now has a web site! To get to the web site, go to: http://www.dot.ca.gov

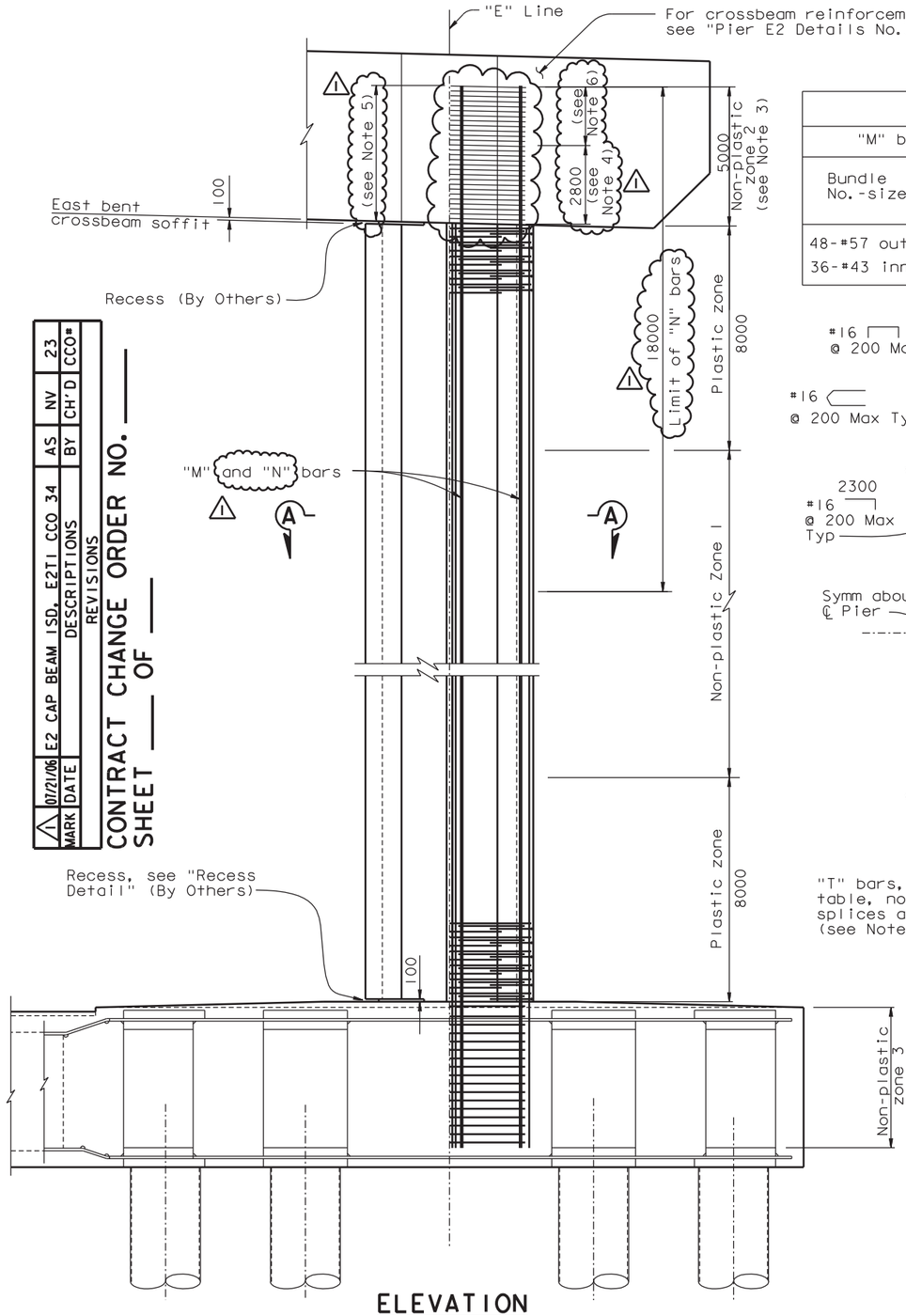

ELEVATION
1:100

Pier reinforcement (see Note 1)															
"M" bars		"N" bars		"T" and "L" bars				Continuous welded hoop							
Bundle No.-sizes	Total per pier	No.-size	Total per pier	Plastic zone		Non-plastic zone 1		Plastic zone		Non-plastic zone 1		Non-plastic zone 2		Non-plastic zone 3	
				Size	spacing	Size	spacing	No.-size	Spacing	No.-size	Spacing	No.-size	Spacing	No.-size	Spacing
48-#57 outer 36-#43 inner	192 144	#43	40	#22	100	#22	100	2-#25	100	#25	100	#25	900 Max	2-#25	150

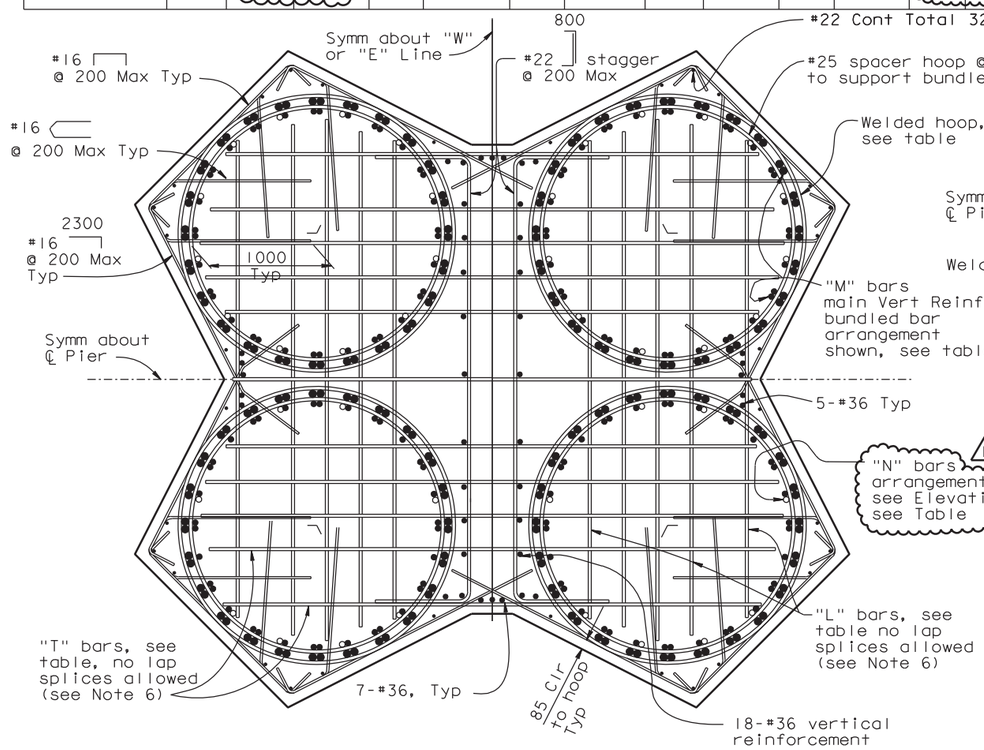

SECTION B-B
1:25

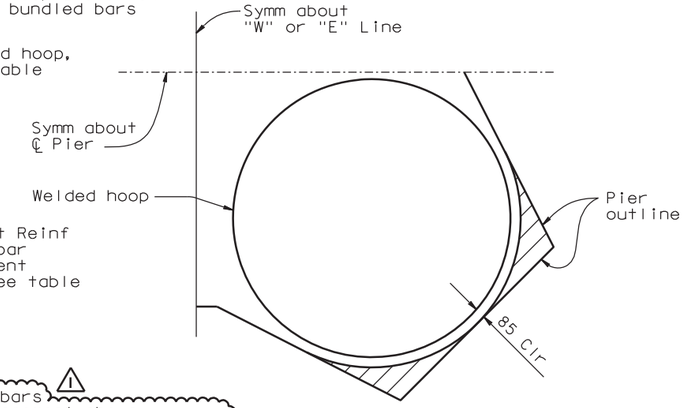

RECESS DETAIL
1:25

NOTES:

1. Reinforcement is for information only, and by Others.
2. Main vertical reinforcement and hoop reinforcement are "Ultimate" butt splices.
3. Contractor shall remove the corrosion protection from all reinforcing and shall roughen the existing Pier E2 concrete surface prior to pouring the concrete crossbeam.
4. Contractor shall remove existing continuous welded hoops down to soffit. Replace with continuous welded hoops spaced at 175 mm placed at 2% slope up to 2800 mm from soffit.
5. Refer to "Pier E2 Details No.10" sheet for main vertical reinforcement cutoff allowance.
6. Contractor shall remove existing continuous welded hoops and replace with #36 ☐ @ 175 mm placed at 2% slope. See Section F-F on "Pier E2 Detail No.4" sheet.

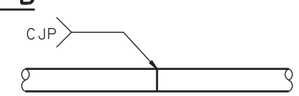

BUTT WELDED CONTINUOUS HOOP
NTS

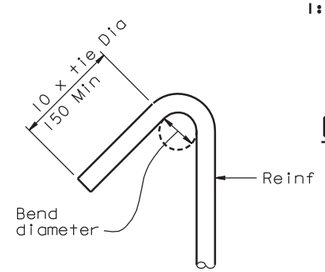

135° SEISMIC HOOK
No scale

LEGEND:

100 Recess

ALL DIMENSIONS ARE IN MILLIMETERS UNLESS OTHERWISE SHOWN

MARK	DATE	DESCRIPTIONS	BY	CH'D	CCO#
1	07/21/06	E2 CAP BEAM 1SD, E2T1 CCO 34	AS	NV	23

REVISIONS

CONTRACT CHANGE ORDER NO. ___
SHEET ___ OF ___

100% PS&E

DATE PLOTTED => 21 DEC 2007 TIME PLOTTED => 10:17:40

USERNAME => ptom

SAN FRANCISCO OAKLAND BAY BRIDGE
EAST SPAN SEISMIC SAFETY PROJECT
SELF-ANCHORED SUSPENSION BRIDGE
(SUPERSTRUCTURE & TOWER)

PIER E2 DETAILS NO.2

R. Valizadeh/V. Toan/Y.L./W.L./F.C.
DESIGN OVERSIGHT
SIGN OFF DATE 07/21/06

	BY	CHECKED
DESIGN	A. Sanjines	J. Chan
DETAILS	R. Xu	J. Chan
QUANTITIES	R. Xu	C. Bernardo

PREPARED FOR THE STATE OF CALIFORNIA DEPARTMENT OF TRANSPORTATION

R. Manzanarez
PROJECT ENGINEER

BRIDGE NO. 34-0006L/R
KILOMETER POST 13.2/13.9

CU 04
EA 0120F1

DISREGARD PRINTS BEARING EARLIER REVISION DATES

REVISION DATES (PRELIMINARY STAGE ONLY): 08/02/99 05/31/01 04/08/02 07/01/02 12/19/02 05/16/03

SHEET 94R1 OF

Rev. Date: 5-18-98

ORIGINAL SCALE IN MILLIMETERS FOR REDUCED PLANS 0 10 20 30 40 50 60 70 80 90 100

FILE => I:\bb\04-012001\sas\contract plans and cco\cco\cco#23\update 12-21-07\dgn\aepir02e-r1.dgn

DIST.	COUNTY	ROUTE	KILOMETER POST TOTAL PROJECT	SHEET NO.	TOTAL SHEETS
04	SF	80	13.2/13.9	518	1204

REGISTERED ENGINEER - CIVIL

12-6-04
PLANS APPROVAL DATE

REGISTERED PROFESSIONAL ENGINEER Alex E. Sanjines No. C 051153 Exp. 9/30/07 CIVIL STATE OF CALIFORNIA

The State of California or its officers or agents shall not be responsible for the accuracy or completeness of electronic copies of this plan sheet.

T.Y. LIN / MOFFATT & NICHOL
825 BATTERY STREET
SAN FRANCISCO, CA 94111

Caltrans now has a web site! To get to the web site, go to: http://www.dot.ca.gov

5

Caltrans Metric

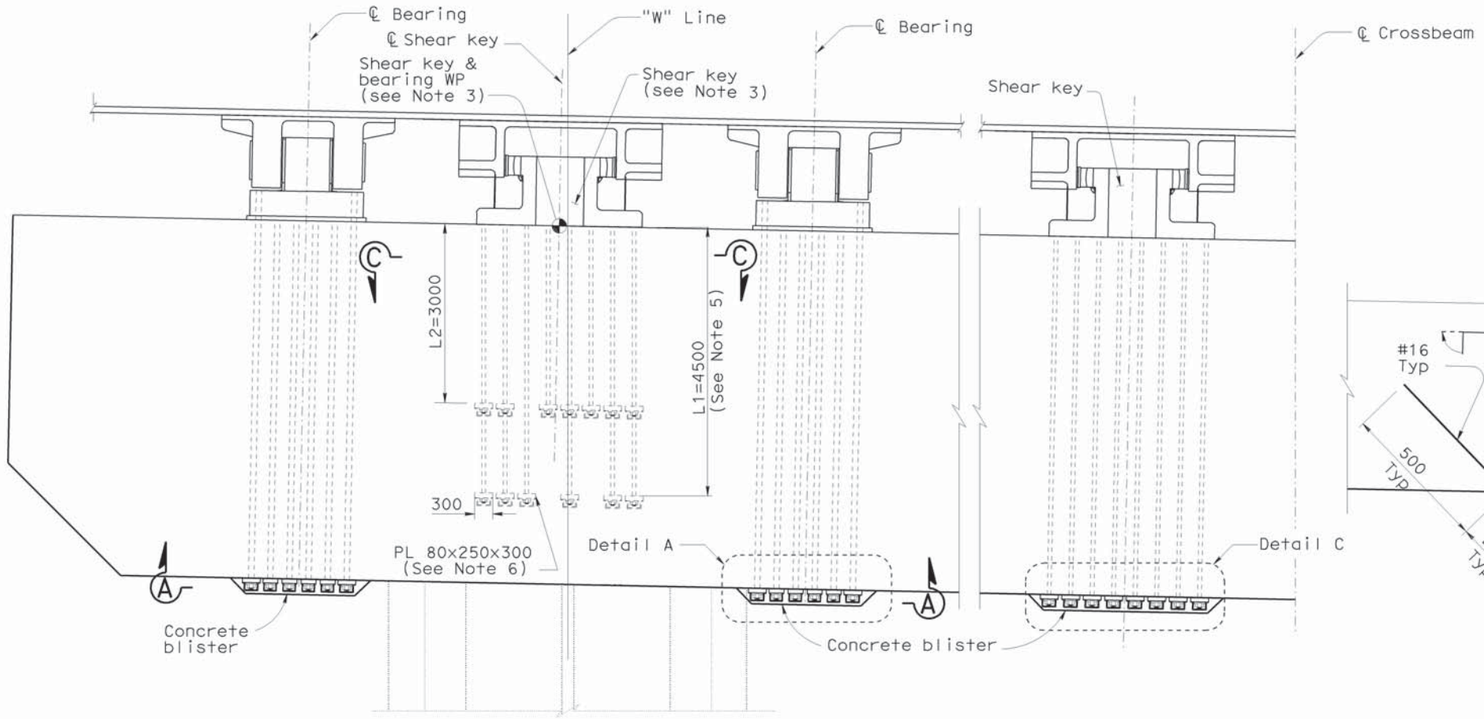

ELEVATION
1:50

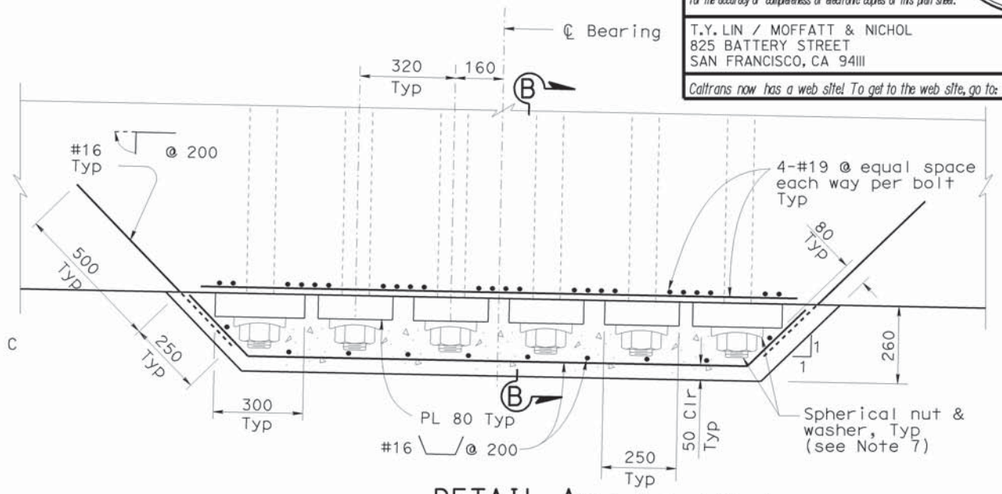

DETAIL A (Detail C similar)
1:10

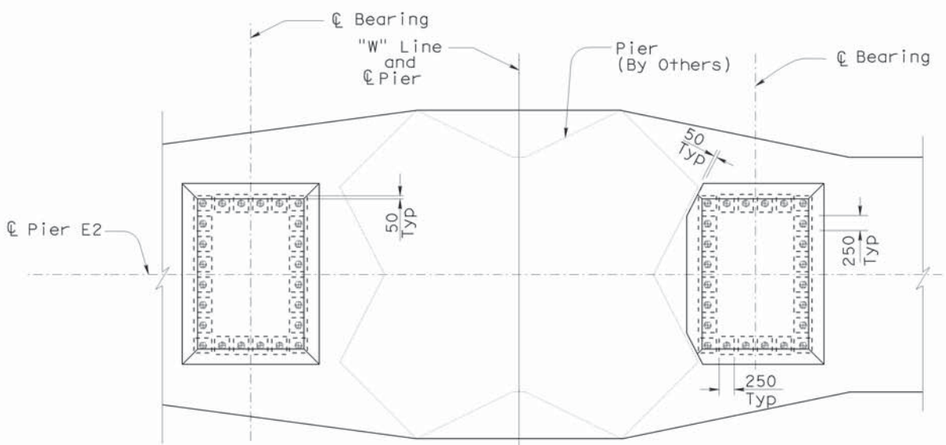

SECTION A-A
1:50

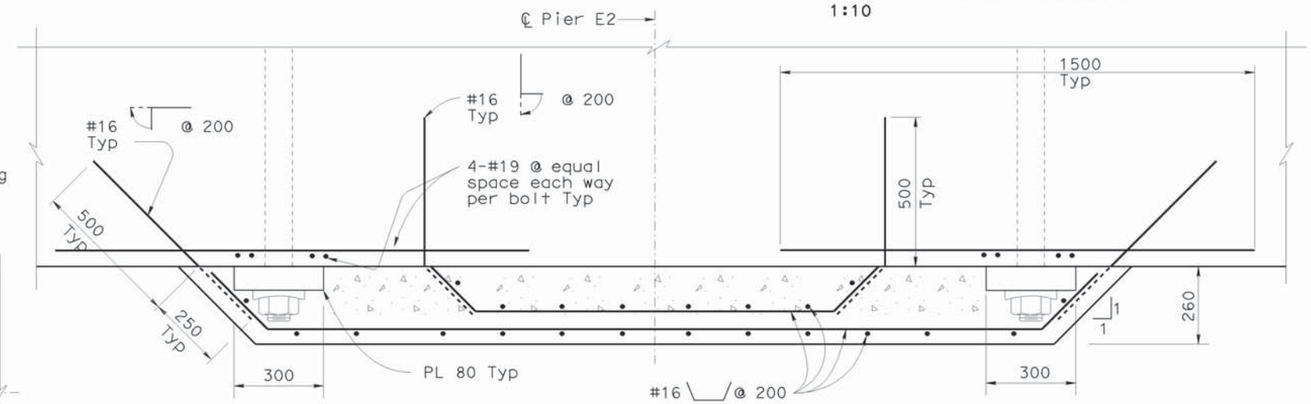

SECTION B-B
1:10

NOTES:

1. For pier E2 bearing hold down assembly, see "Pier E2 Bearing Details" sheets.
2. Local confining spiral reinforcement for bearing HS bolts shall be provided by hardware suppliers, not shown for clarity.
3. For pier E2 bearing and shear key location, see "Pier E2 Bearing and Shear Key Layout" sheet.
4. For Section C-C, see "Pier E2 Details No.10" sheet.
5. For shear key anchor bolt length layout, see "Pier E2 Details No.10" sheet.
6. Rotate shear key anchor plates as necessary to clear column reinforcement.
7. The spherical nut and washer shall be able to accomodate a maximum roation of 3 degress in any direction.
8. End cap shall be provided to prevent concrete from bonding to spherical nut and washer. Anchor bolts shall be able to pivot freely to accommodate construction tolerance.

100 % PS&E

5 **REVISED PER ADDENDUM NO. 5 DATED DECEMBER 21, 2005**

ALL DIMENSIONS ARE IN MILLIMETERS UNLESS OTHERWISE SHOWN

SAN FRANCISCO OAKLAND BAY BRIDGE
EAST SPAN SEISMIC SAFETY PROJECT
SELF-ANCHORED SUSPENSION BRIDGE
(SUPERSTRUCTURE & TOWER)

PIER E2 DETAILS NO.9

R. Valizadeh/V.Toan/Y.L./W.L./F.C.
DESIGN OVERSIGHT
SIGN OFF DATE 12/07/05

	BY	CHECKED
DESIGN	A. Sanjines	J. Chan
DETAILS	R. Xu	J. Chan
QUANTITIES	R. Xu	C. Bernardo

PREPARED FOR THE STATE OF CALIFORNIA DEPARTMENT OF TRANSPORTATION

R. Manzanarez
PROJECT ENGINEER

BRIDGE NO. 34-0006L/R
KILOMETER POST 13.2/13.9

CU 04
EA 0120F1

DISREGARD PRINTS BEARING EARLIER REVISION DATES

REVISION DATES (PRELIMINARY STAGE ONLY) 05/31/01 04/08/02 07/09/02 12/19/02 12/07/05

SHEET 101 OF

Rev. Dates 5-18-98

ORIGINAL SCALE IN MILLIMETERS FOR REDUCED PLANS 0 10 20 30 40 50 60 70 80 90 100

FILE => aepir07e.add

USERNAME => trlenard DATE PLOTTED => 15-DEC-2005 TIME PLOTTED => 06:10

DIST.	COUNTY	ROUTE	KILOMETER POST TOTAL PROJECT	SHEET NO.	TOTAL SHEETS
04	SF	80	13.2/13.9	519R1	1204

REGISTERED ENGINEER - CIVIL

12-6-04
PLANS APPROVAL DATE

REGISTERED PROFESSIONAL ENGINEER Alex E. Sanjines No. C 051153 Exp. 9/30/07 CIVIL STATE OF CALIFORNIA

The State of California or its officers or agents shall not be responsible for the accuracy or completeness of electronic copies of this plan sheet.

T.Y. LIN / MOFFATT & NICHOL
825 BATTERY STREET
SAN FRANCISCO, CA 94111

Caltrans now has a web site! To get to the web site, go to: http://www.dot.ca.gov

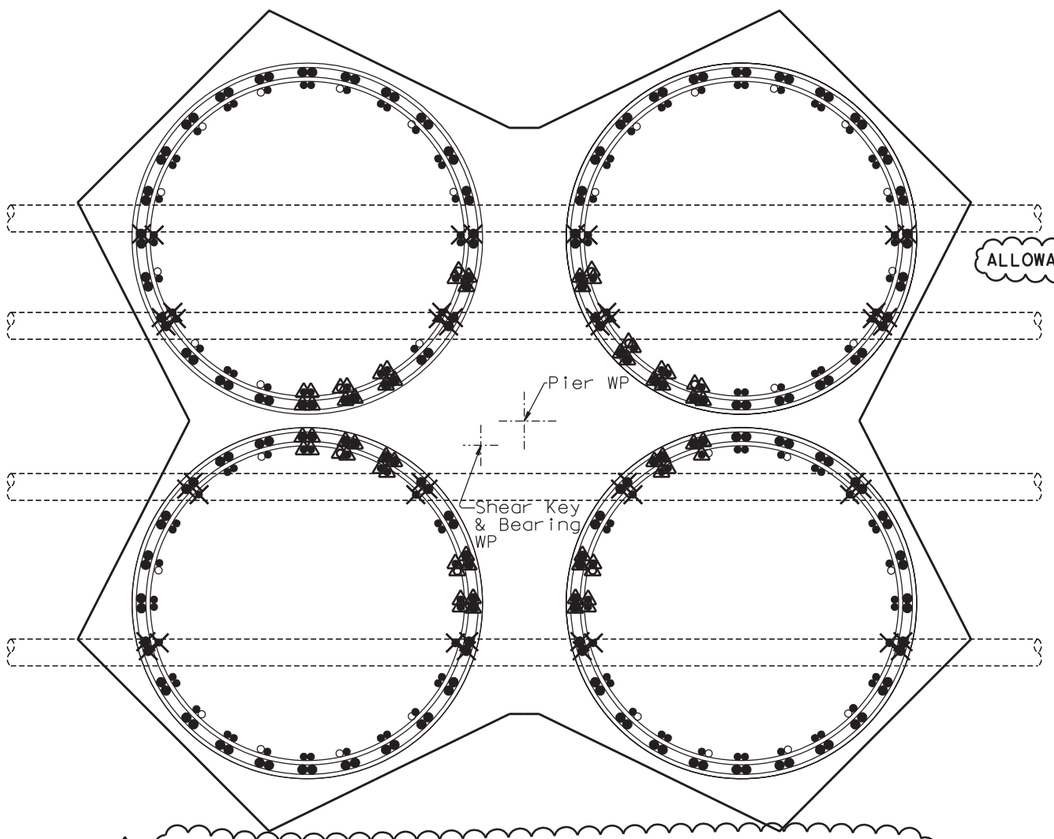

CUTOFF ALLOWANCE FOR COLUMN REINFORCEMENT

NTS

(Allowance shown is theoretical and is for information only. Not for construction). (see Note 2 thru 4)

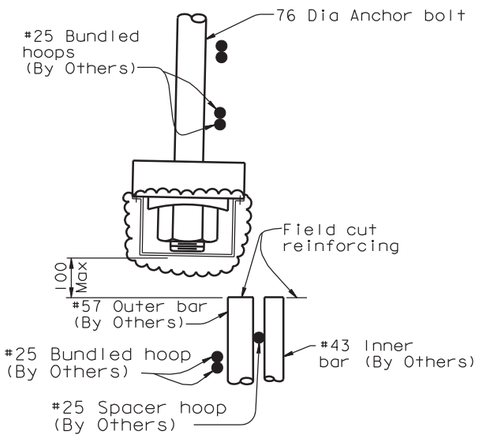

ALLOWANCE FOR ANCHOR BOLT AND ANCHOR PLATE

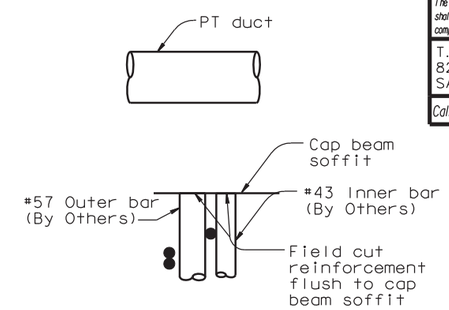

ALLOWANCE FOR PT DUCT

FIELD CUT DETAIL

NTS

(see Notes 2 thru 4)

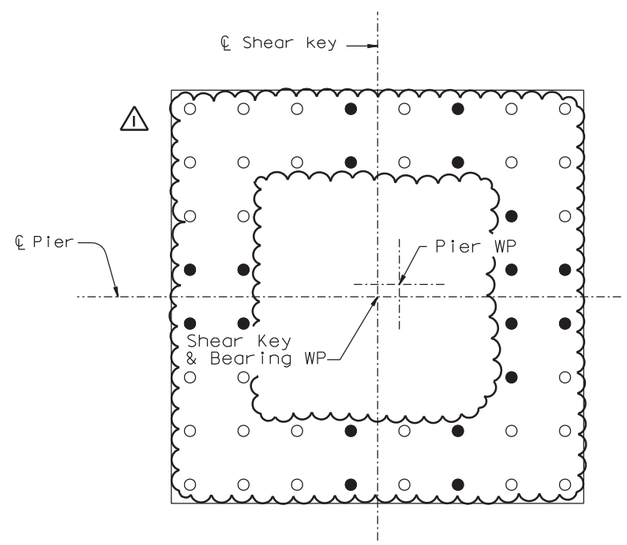

SECTION C-C

1:20

(Anchor bolt length layout)

LEGEND:

- o Anchor bolts length = L1
- • Anchor bolts length = L2
- × Indicates #43 or #57 column reinforcement may be field cut below the ducts. See "Allowance for PT duct".
- △ Indicates #43 or #57 column reinforcement may be field cut below the anchor bolt or anchor PL. See "Allowance for anchor bolt and anchor plate".

NOTES:

1. Local confining spiral reinforcement for bearing HS bolts shall be provided by hardware suppliers; not shown for clarity.
2. Rotate anchor plates as necessary to clear column reinforcement.
3. Contractor may field cut existing column reinforcement marked with X or △ to clear PT ducts and shear key anchor bolt/anchor plate. See Field Cut Detail.
4. Prior to cutting any column reinforcement, the Contractor is required to submit locations and number of bars to be field cut for Engineer's review and approval.

MARK	DATE	DESCRIPTIONS	BY	CH'D	CCO#
1	07/21/06	E2 CAP BEAM ISD	AS	NV	23

REVISIONS

CONTRACT CHANGE ORDER NO. _____
SHEET ____ OF ____

ALL DIMENSIONS ARE IN MILLIMETERS UNLESS OTHERWISE SHOWN

R. Valizadeh/V. Toan/Y.L./W.L./F.C.
DESIGN OVERSIGHT
Roya Valizadeh / Vong P. Toan / Y. Liu
SIGN OFF DATE 07/21/06

DESIGN	BY A. Sanjines	CHECKED J. Chan	
DETAILS	BY R. Xu	CHECKED J. Chan	
QUANTITIES	BY C. Bernardo	CHECKED B. Mason	

PREPARED FOR THE STATE OF CALIFORNIA DEPARTMENT OF TRANSPORTATION

R. Manzanarez
PROJECT ENGINEER

BRIDGE NO. 34-0006L/R
KILOMETER POST 13.2/13.9

SAN FRANCISCO OAKLAND BAY BRIDGE
EAST SPAN SEISMIC SAFETY PROJECT
SELF-ANCHORED SUSPENSION BRIDGE
(SUPERSTRUCTURE & TOWER)

PIER E2 DETAILS NO. 10

Rev. Date: 5-18-98

ORIGINAL SCALE IN MILLIMETERS FOR REDUCED PLANS 0 10 20 30 40 50 60 70 80 90 100

CU 04
EA 0120F1

DISREGARD PRINTS BEARING EARLIER REVISION DATES

REVISION DATES (PRELIMINARY STAGE ONLY) 05/31/01 04/08/02 07/09/02 12/19/02 05/16/03 12/07/05

SHEET 102R1 OF

FILE => I:\bb\04-01200I\sas\contract plans and cco\cco\cco#23\update 12-21-07\dgn\aepir08-r1.dgn

USERNAME => ptom DATE PLOTTED => 21 DEC 2007 TIME PLOTTED => 10:21:32

100 % PS&E

DIST.	COUNTY	ROUTE	KILOMETER POST TOTAL PROJECT	SHEET NO.	TOTAL SHEETS
04	SF	80	13.2/13.9	520R1	1204

Caltrans Metric

REGISTERED ENGINEER - CIVIL

12-6-04
PLANS APPROVAL DATE

REGISTERED PROFESSIONAL ENGINEER John Sun No. C 54648 Exp. 12/31/05 CIVIL STATE OF CALIFORNIA

The State of California or its officers or agents shall not be responsible for the accuracy or completeness of electronic copies of this plan sheet.

T.Y. LIN / MOFFATT & NICHOL
825 BATTERY STREET
SAN FRANCISCO, CA 94111

Caltrans now has a web site! To get to the web site, go to: http://www.dot.ca.gov

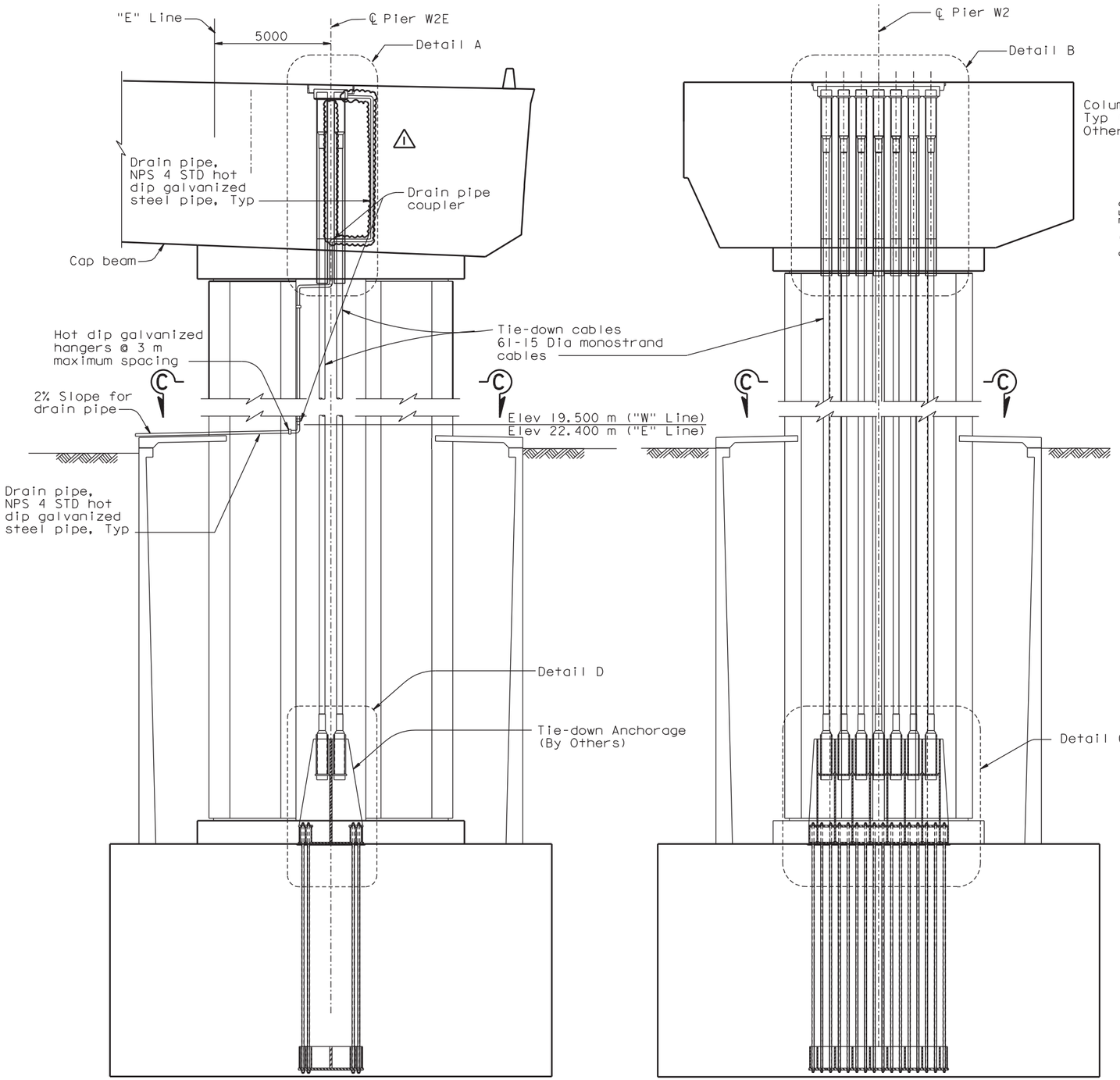

SECTION A-A
1:100

SECTION B-B
1:100

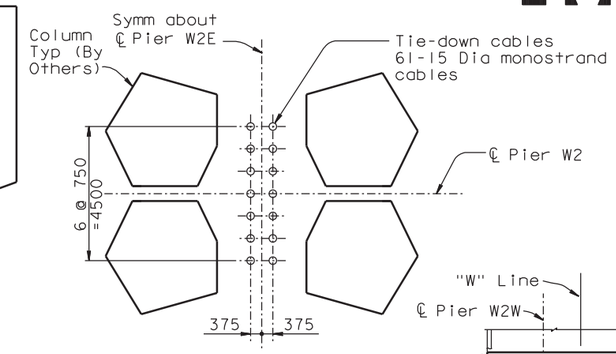

SECTION C-C
1:100

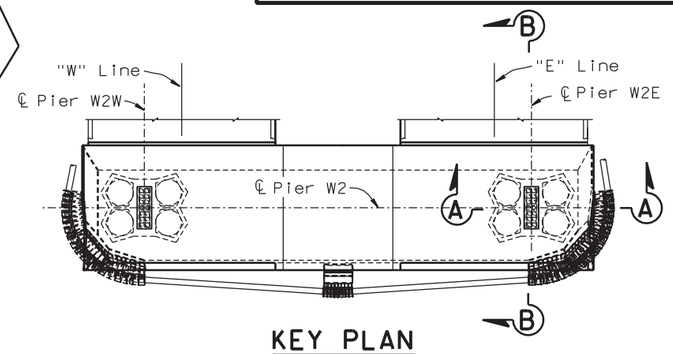

KEY PLAN
1:400

MARK	DATE	DESCRIPTIONS	BY	CH'D	CCO#
1	07/21/06	W2 CAP BEAM ISD	JD	NV	23

REVISIONS

FOR REVISIONS ONLY

REGISTERED PROFESSIONAL ENGINEER Jaimes P. Duxbury No. C 64677 Exp. 06/30/07 CIVIL STATE OF CALIFORNIA

CONTRACT CHANGE ORDER NO. _____
SHEET ____ OF ____

NOTES:

1. Tie-down cables shall be of ASTM A416 Grade 270 (fu=1860 MPa) seven wire, low relaxation monostrands, unless specified otherwise.
2. For Details A and B, see "Cable Tie-Down Details No.3" sheet.
3. For Details C and D, see "Cable Tie-Down Details No.4" sheet.
4. For additional prestressing details, see "Prestressing Notes" sheet.
5. For general stressing sequence, see "Pier W2 Construction Sequence" sheet.
6. Jacking force in the tie-down cables shall be 8570 kN typical.
7. For tie-down cable details, see "Cable Tie-Down Details No.2" sheet.
8. For "Cable Tie-Down Details" sheets, the Contractor shall verify all controlling field dimensions before ordering or fabricating any material.

100% PS&E

ALL DIMENSIONS ARE IN MILLIMETERS UNLESS OTHERWISE SHOWN

R. Valizadeh/V. Toan/Y.L./W.L./F.C.
DESIGN OVERSIGHT
Reza Valizadeh / Vong Toan / Y. Liu
SIGN OFF DATE 07/21/06

DESIGN	BY J. Sun	CHECKED J. Straski	
DETAILS	BY S. Shi	CHECKED J. Straski	
QUANTITIES	BY J. Duxbury	CHECKED S. Shi	

PREPARED FOR THE STATE OF CALIFORNIA DEPARTMENT OF TRANSPORTATION

R. Manzanarez
PROJECT ENGINEER

BRIDGE NO. 34-0006L/R
KILOMETER POST 13.2/13.9

SAN FRANCISCO OAKLAND BAY BRIDGE
EAST SPAN SEISMIC SAFETY PROJECT
SELF-ANCHORED SUSPENSION BRIDGE
(SUPERSTRUCTURE & TOWER)

CABLE TIE-DOWN DETAILS NO. 1

Rev. Date: 5-18-98

ORIGINAL SCALE IN MILLIMETERS FOR REDUCED PLANS 0 10 20 30 40 50 60 70 80 90 100

CU 04
EA 0120F1

DISREGARD PRINTS BEARING EARLIER REVISION DATES

REVISION DATES (PRELIMINARY STAGE ONLY) 05/15/99 08/02/99 05/24/01 04/08/02 07/04/02 12/19/02

SHEET 103R1 OF

FILE => I:\bb\04-0120I\sas\contract plans and cco\cco\cco#23\deptd01.dgn

USERNAME => vignatovs DATE PLOTTED => 10 MAY 2007 TIME PLOTTED => 11:30:15

DIST.	COUNTY	ROUTE	KILOMETER POST TOTAL PROJECT	SHEET NO.	TOTAL SHEETS
04	SF	80	13.2/13.9	813S6	1204

Caltrans Metric

REGISTERED ENGINEER - CIVIL

07-06-12
PLANS APPROVAL DATE

REGISTERED PROFESSIONAL ENGINEER Marwan N. Nader No. C 054426 Exp. 12/31/13 CIVIL STATE OF CALIFORNIA

The State of California or its officers or agents shall not be responsible for the accuracy or completeness of electronic copies of this plan sheet.

T.Y. LIN / MOFFATT & NICHOL
825 BATTERY STREET
SAN FRANCISCO, CA 94111

Caltrans now has a web site! To get to the web site, go to: http://www.dot.ca.gov

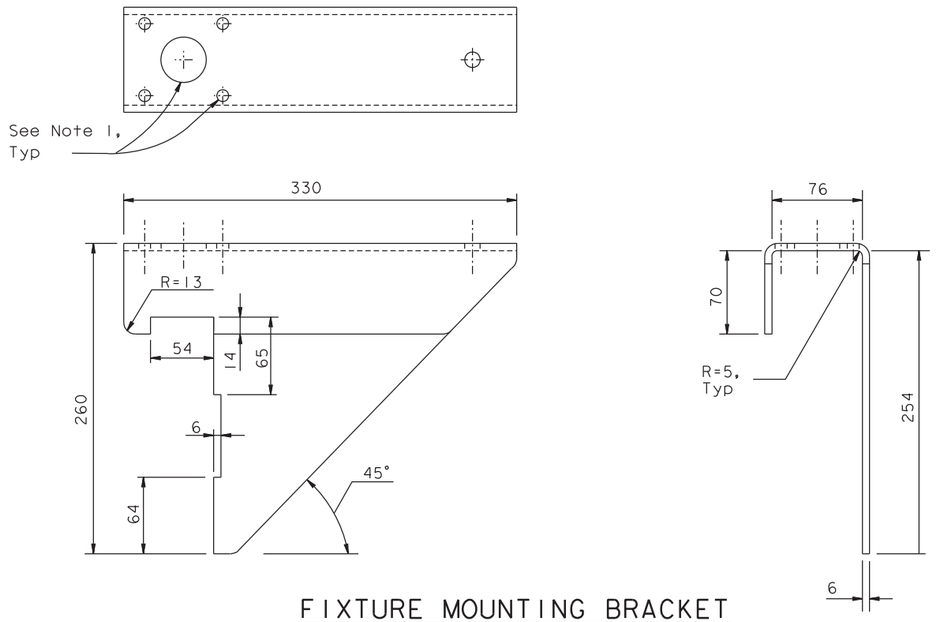

FIXTURE MOUNTING BRACKET
1:2.5

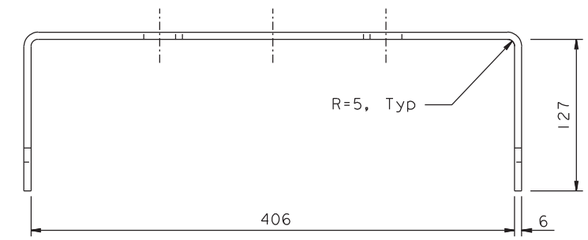

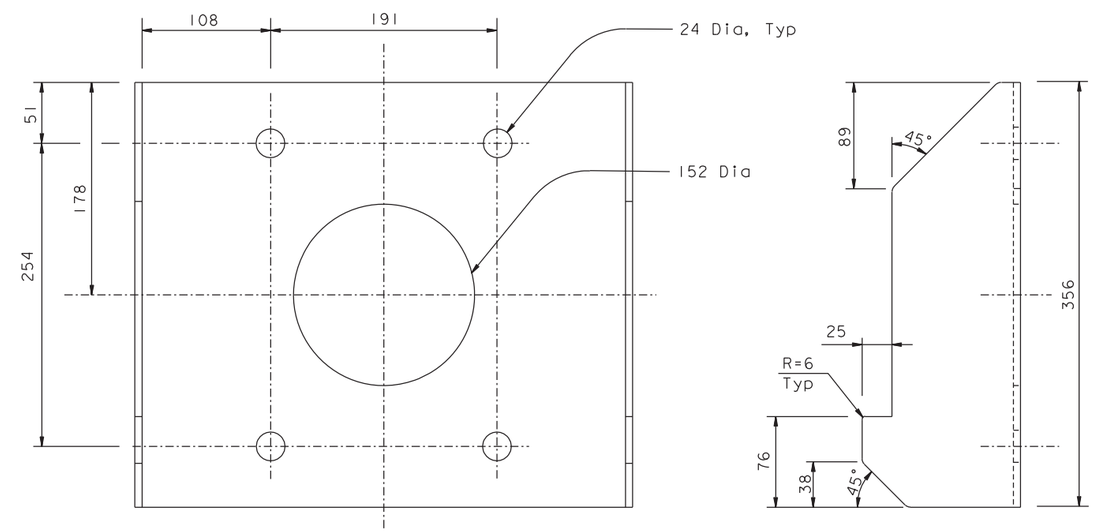

U-CHANNEL FOR MAD
1:2.5

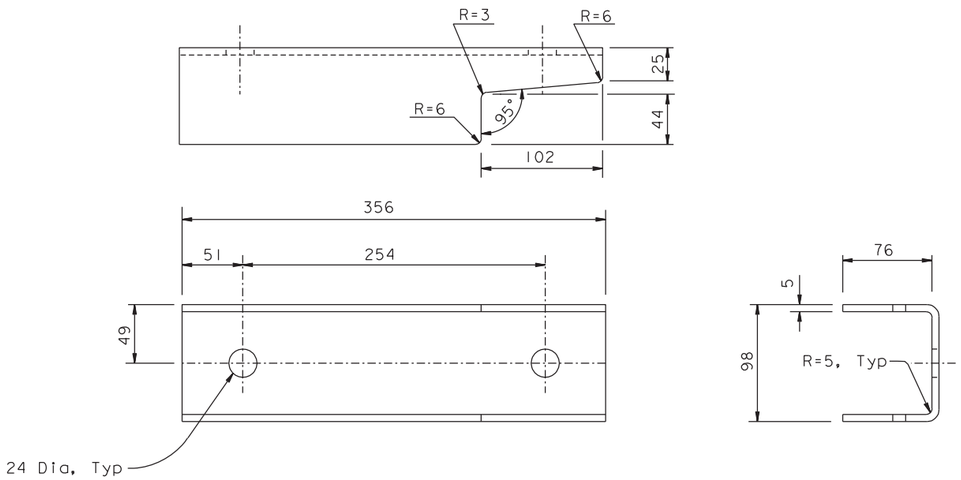

U-CHANNEL FOR MSR
1:2.5

NOTES:

1. The Contractor shall provide holes for light assembly per manufacturer's recommendations, subject to review and approval of the Engineer.
2. Light assembly details and dimensions may be adjusted for fabrication to suit lighting manufacturer's means and methods. Adjusted dimensions shall be subject to review and approval of the Engineer.

CONTRACT CHANGE ORDER NO. ____
SHEET ___ OF ___

REQUESTS FOR INFORMATION NOT ADDRESSED IN THIS CCO REMAIN IN FORCE

ALL DIMENSIONS ARE IN MILLIMETERS UNLESS OTHERWISE SHOWN

R. Valizadeh/V. Toan/Y.L./W.L./F.C.
DESIGN OVERSIGHT
SIGN OFF DATE 07/06/12

MARK	DATE	DESCRIPTIONS	BY	CH'D	CCO#
0	07/06/12	CABLE ELECTRICAL	DT	MN	72S1

REVISIONS

	BY	CHECKED
DESIGN	D. Turner	M. Nader
DETAILS	D. Turner	A. Baumberger
QUANTITIES	D. Turner	A. Baumberger

PREPARED FOR THE STATE OF CALIFORNIA DEPARTMENT OF TRANSPORTATION

R. Manzanarez
PROJECT ENGINEER

BRIDGE NO. 34-0006L/R
KILOMETER POST 13.2/13.9

SAN FRANCISCO OAKLAND BAY BRIDGE
EAST SPAN SEISMIC SAFETY PROJECT
SELF-ANCHORED SUSPENSION BRIDGE
(SUPERSTRUCTURE & TOWER)

CABLE HANDROPE DETAILS NO. 2F

Rev. Date: 5-18-98

ORIGINAL SCALE IN MILLIMETERS FOR REDUCED PLANS 0 10 20 30 40 50 60 70 80 90 100

CU 04
EA 0120F1

DISREGARD PRINTS BEARING EARLIER REVISION DATES 07/06/12

REVISION DATES (PRELIMINARY STAGE ONLY)

SHEET 396S6 OF

FILE => I:\bb\04-012001\sas\contract plans and cco\cco\cco#72s1\3-revision 07-06-12\dgn\agshr08f.dgn

USERNAME => DWinrow DATE PLOTTED => 06 JUL 2012 TIME PLOTTED: 03:06

DIST.	COUNTY	ROUTE	KILOMETER POST TOTAL PROJECT	SHEET NO.	TOTAL SHEETS
04	SF	80	13.2/13.9	882ARI	1204

Caltrans Metric

REGISTERED ENGINEER - CIVIL

12-6-04
PLANS APPROVAL DATE

REGISTERED PROFESSIONAL ENGINEER Marwan N. Nader No. C 054426 Exp. 12/31/09 CIVIL STATE OF CALIFORNIA

The State of California or its officers or agents shall not be responsible for the accuracy or completeness of electronic copies of this plan sheet.

T.Y. LIN / MOFFATT & NICHOL
825 BATTERY STREET
SAN FRANCISCO, CA 94111

Caltrans now has a web site! To get to the web site, go to: http://www.dot.ca.gov

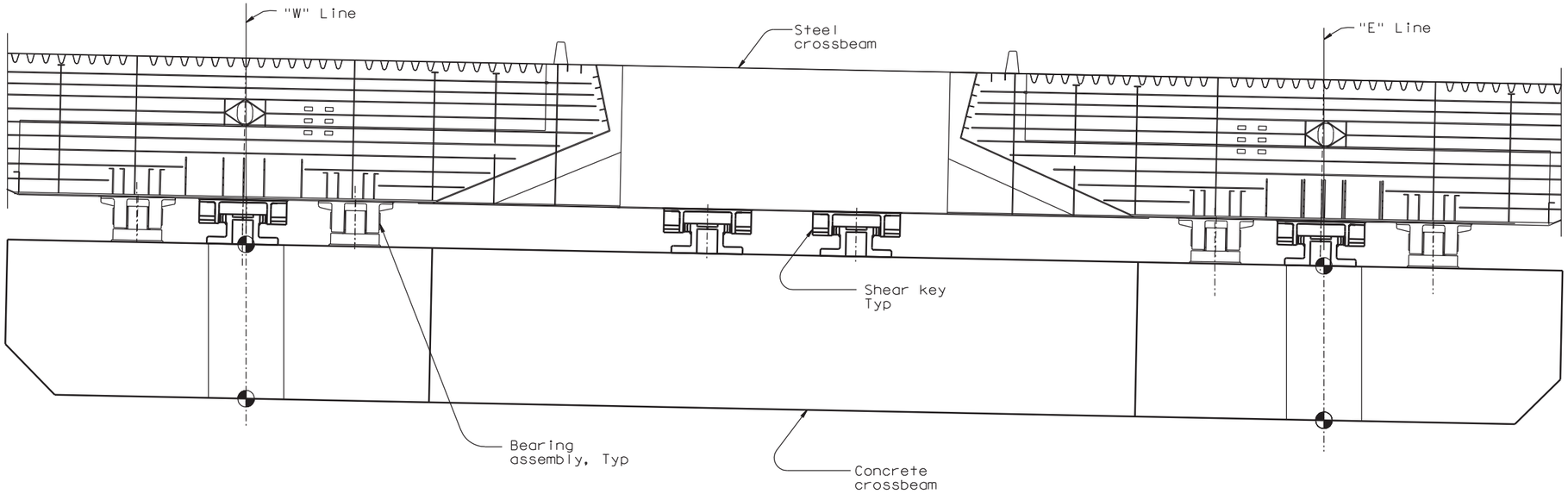

ELEVATION (Looking East)

REQUESTS FOR INFORMATION NOT ADDRESSED IN THIS CCO REMAIN IN FORCE

MARK	DATE	DESCRIPTIONS	BY	CH'D	CCO#
1	09/26/08	E2 CROSS BEAM	MN	NV	71

REVISIONS

CONTRACT CHANGE ORDER NO. ____
SHEET ___ OF ___

BEARING ASSEMBLY TABLE

Location	Bearing Typ	Number of bearing units per location	Design Load (kN per bearing)							Design rotation (radians)						Design Displacement (mm)					
			Service			Ultimate				Service			Ultimate			Service			Ultimate		
			Compression	Uplift	Long or Trans	Load Condition	Compression	Uplift	Long or Trans	Trans Axis	Long Axis	Vert Axis	Trans Axis	Long Axis	Vert Axis	Trans Axis	Long Axis	Vert Axis	Trans Axis	Long Axis	Vert Axis
"W" Line	Spherical Bushing	2	35000	0	0	Shear Key Engaged	86000	32000	0	0.009	0	0	0.130	0.032	0.032	5	5	0	20	20	2**
						Shear Key Failed*	68000	17000	30500												
"E" Line	Spherical Bushing	2	35000 (1)	0	0	Shear Key Engaged	86000	32000	0	0.009	0	0	0.130	0.032	0.032	5	5	0	20	20	2**
						Shear Key Failed*	68000	17000	30500												

Installation Misalignment Tolerances (Per bearing/ Shear Key)	Trans./Long./Vertical	Rotational
	± 2 mm	± 0.5°

* Seismic load factor γ = 1.0 (For shear key engaged load condition, γ = 1.4).
** For uplifting only.

SHEAR KEY ASSEMBLY TABLE

Location	Number of Shear Key Units Per Location	Design Load (kN per shear key)						Design rotation (radians)						Design Displacement (mm)					
		Service			Ultimate			Service			Ultimate			Service			Ultimate		
		Trans	Long	Vert	Trans	Long	Vert	Trans Axis	Long Axis	Vert Axis	Trans Axis	Long Axis	Vert Axis	Trans Axis	Long Axis	Vert Axis	Trans Axis	Long Axis	Vert Axis
"W" Line	1	9000	4500	0	42500	35000	0	0.009	0	0	0.130	0.130	0.130	0	0	10	0	0	20
"E" Line	1	9000	4500	0	42500	35000	0	0.009	0	0	0.130	0.130	0.130	0	0	10	0	0	20
Crossbeam	2	9000	1	0	42500	0	0	0.009	0	0	0.130	0.130	0.130	0	5	10	0	20	20

ALL DIMENSIONS ARE IN MILLIMETERS UNLESS OTHERWISE SHOWN

SAN FRANCISCO OAKLAND BAY BRIDGE
EAST SPAN SEISMIC SAFETY PROJECT
SELF-ANCHORED SUSPENSION BRIDGE
(SUPERSTRUCTURE & TOWER)

PIER E2 BEARING AND SHEAR KEY DESIGN FORCES

R. Valizadeh/V. Toan/Y.L./W.L./F.C.
DESIGN OVERSIGHT
Roya Valizadeh / Vong D. Toan / Y. Liu
SIGN OFF DATE 09/26/08

	BY	CHECKED
DESIGN	M. Nader	L. Rus
DETAILS	N. Vo	J. Leventini
QUANTITIES	N. Vo	J. Leventini

PREPARED FOR THE STATE OF CALIFORNIA DEPARTMENT OF TRANSPORTATION

R. Manzanarez
PROJECT ENGINEER

BRIDGE NO. 34-0006L/R
KILOMETER POST 13.2/13.9

CU 04
EA 0120F1

DISREGARD PRINTS BEARING EARLIER REVISION DATES → 12/07/05

REVISION DATES (PRELIMINARY STAGE ONLY)

SHEET 465ARI OF

Rev. Date: 5-18-98

ORIGINAL SCALE IN MILLIMETERS FOR REDUCED PLANS 0 10 20 30 40 50 60 70 80 90 100

FILE => I:\bb\04-012001\sas\contract plans and cco\cco\in progress\cco#71\original 09-26-08\dgn\aksrd02.dgn

100% PS&E
DATE PLOTTED => 08 OCT 2008 TIME PLOTTED => 15:34:35
USERNAME => ptom

DIST.	COUNTY	ROUTE	KILOMETER POST TOTAL PROJECT	SHEET NO.	TOTAL SHEETS
04	SF	80	13.2/13.9	882R1	1204

REGISTERED ENGINEER - CIVIL

12-6-04
PLANS APPROVAL DATE

REGISTERED PROFESSIONAL ENGINEER Marwan N. Nader No. C 054426 Exp. 12/31/09 CIVIL STATE OF CALIFORNIA

The State of California or its officers or agents shall not be responsible for the accuracy or completeness of electronic copies of this plan sheet.

T.Y. LIN / MOFFATT & NICHOL
825 BATTERY STREET
SAN FRANCISCO, CA 94111

Caltrans now has a web site! To get to the web site, go to: http://www.dot.ca.gov

LEGEND:

CR Center of Rotation

Caltrans Metric

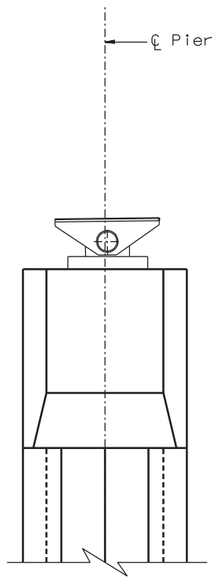

SIDE ELEVATION

1:200
(Looking South)

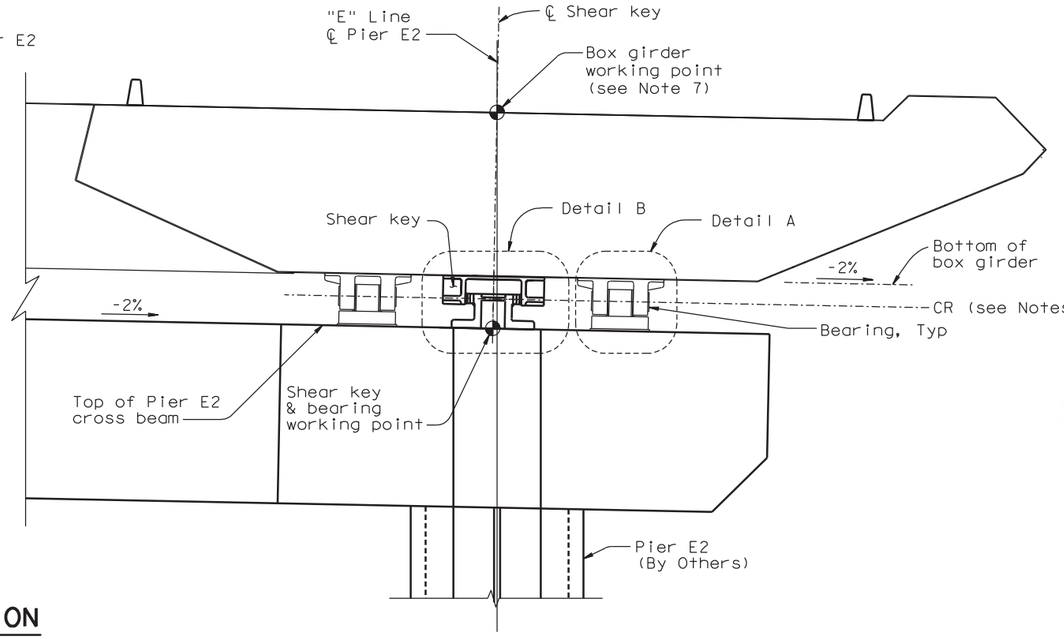

KEY ELEVATION (Looking East)

1:100

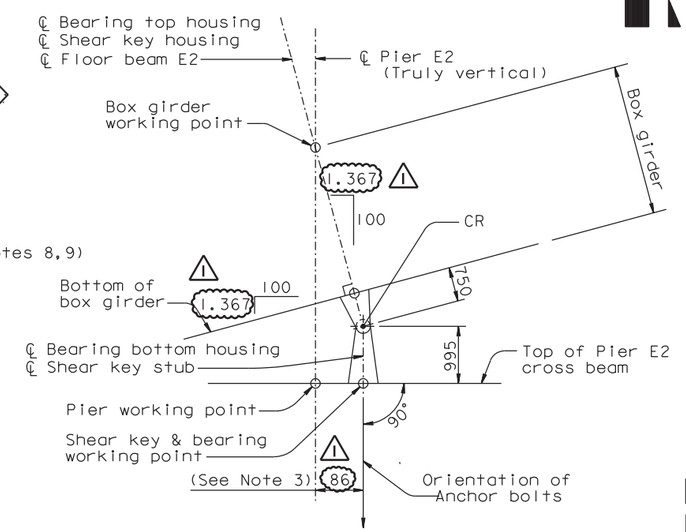

SHEAR KEY AND BEARING LOCATION

NTS
(Looking South)

REQUESTS FOR INFORMATION NOT ADDRESSED IN THIS CCO REMAIN IN FORCE

MARK	DATE	DESCRIPTIONS	BY	CH'D	CCO#
1	09/26/08	E2 CROSS BEAM	MN	NV	71

REVISIONS

CONTRACT CHANGE ORDER NO. ____
SHEET ___ OF ___

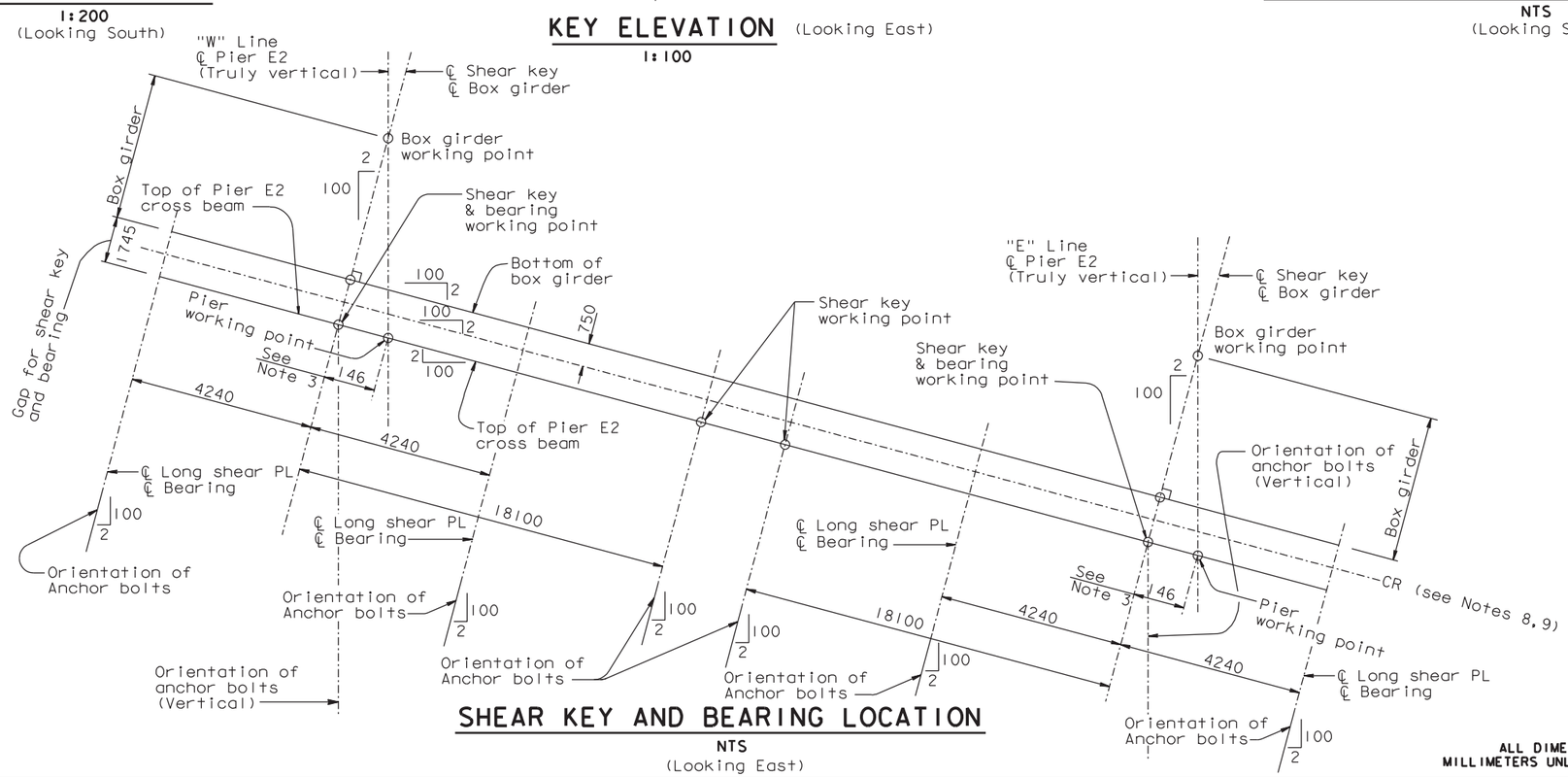

SHEAR KEY AND BEARING LOCATION

NTS
(Looking East)

ALL DIMENSIONS ARE IN MILLIMETERS UNLESS OTHERWISE SHOWN

NOTES:

1. For Detail A, see "Pier E2 Bearing Details No.1" sheet.
2. Detail B is a section view at center line of shear key. For Detail B, see "Pier E2 Shear Key Details No.1" sheet.
3. Offset value is shown for information only. The Contractor shall calculate the offset and verify it in the field before placing the bearings and shear key.
4. The Contractor shall submit the construction sequence of the shear key and bearings based on his ways and means for the Engineer's approval.
5. For floor beam E2, see "Girder at Pier E2" sheets.
6. For longitudinal shear plate, see "Girder at East Transition No.1" sheet.
7. Box girder work point is on the finished profile grade which is the top of 50 mm overlay.
8. At the Contractor's option, small holes may be drilled through the bearings and shear keys for use with a laser alignment method. All holes shall be plugged with tapped screws after bearing and shear key installation.
9. The center of rotation CR shall be a straight line through the pin center of all four bearings, and perpendicular to the bridge axis direction.

100 % PS&E

DATE PLOTTED => 08 OCT 2008 TIME PLOTTED => 15:33:19

R. Valizadeh/V. Toan/Y.L./W.L./F.C.
DESIGN OVERSIGHT
Roya Valizadeh / Vong Toan / Y. Liu
SIGN OFF DATE 09/26/08

	BY	CHECKED
DESIGN	M. Nader	L. Rus
DETAILS	N. Vo	J. Leventini
QUANTITIES	N. Vo	J. Leventini

PREPARED FOR THE STATE OF CALIFORNIA DEPARTMENT OF TRANSPORTATION

R. Manzanarez
PROJECT ENGINEER

BRIDGE NO. 34-0006L/R
KILOMETER POST 13.2/13.9

SAN FRANCISCO OAKLAND BAY BRIDGE
EAST SPAN SEISMIC SAFETY PROJECT
SELF-ANCHORED SUSPENSION BRIDGE
(SUPERSTRUCTURE & TOWER)

PIER E2 BEARING AND SHEAR KEY LAYOUT

Rev. Date: 5-18-98

ORIGINAL SCALE IN MILLIMETERS FOR REDUCED PLANS 0 10 20 30 40 50 60 70 80 90 100

CU 04
EA 0120F1

DISREGARD PRINTS BEARING EARLIER REVISION DATES

REVISION DATES (PRELIMINARY STAGE ONLY) 04/08/02 07/01/02 12/19/02 12/07/05

SHEET 465R1 OF

USERNAME => ptom

FILE => I:\bb\04-0120I\sas\contract plans and cco\cco\in progress\cco#71\original 09-26-08\dgn\aksrd01.dgn

DIST.	COUNTY	ROUTE	KILOMETER POST TOTAL PROJECT	SHEET NO.	TOTAL SHEETS
04	SF	80	13.2/13.9	884R1	1204

Caltrans Metric

REGISTERED ENGINEER - CIVIL

12-6-04

PLANS APPROVAL DATE

REGISTERED PROFESSIONAL ENGINEER Marwan N. Nader No. C 054426 Exp. 12/31/09 CIVIL STATE OF CALIFORNIA

The State of California or its officers or agents shall not be responsible for the accuracy or completeness of electronic copies of this plan sheet.

T.Y. LIN / MOFFATT & NICHOL
825 BATTERY STREET
SAN FRANCISCO, CA 94111

Caltrans now has a web site! To get to the web site, go to: http://www.dot.ca.gov

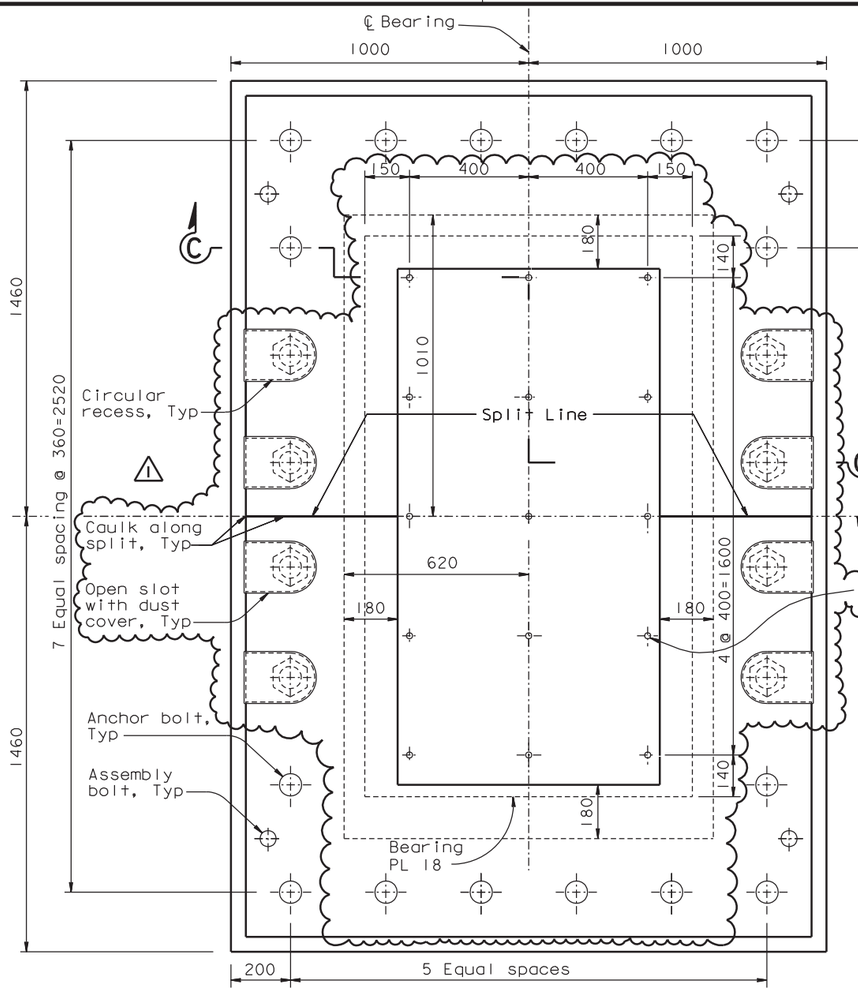

BEARING HOLD DOWN ASSEMBLY PLAN

1:10 (Looking down)

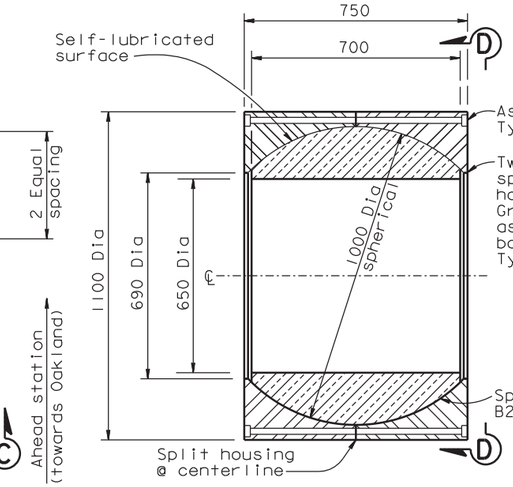

SPHERICAL BUSHING ASSEMBLY DETAIL

1:10

LEGEND:

Indicates zone with Level 1 testing requirements

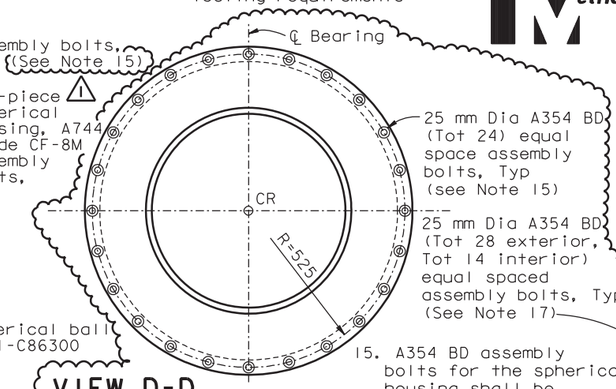

VIEW D-D

1:10

15. A354 BD assembly bolts for the spherical housing shall be stressed to 0.7 Fy.

16. For Detail A and A', see "Pier E2 Bearing Details No. 2A" sheet.

17. A354 BD assembly bolts for the retaining ring plate shall be installed snug-tight plus 1/4 turn.

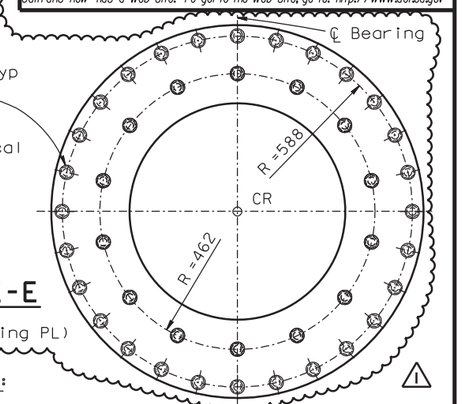

VIEW E-E

1:10 (Retaining Ring PL)

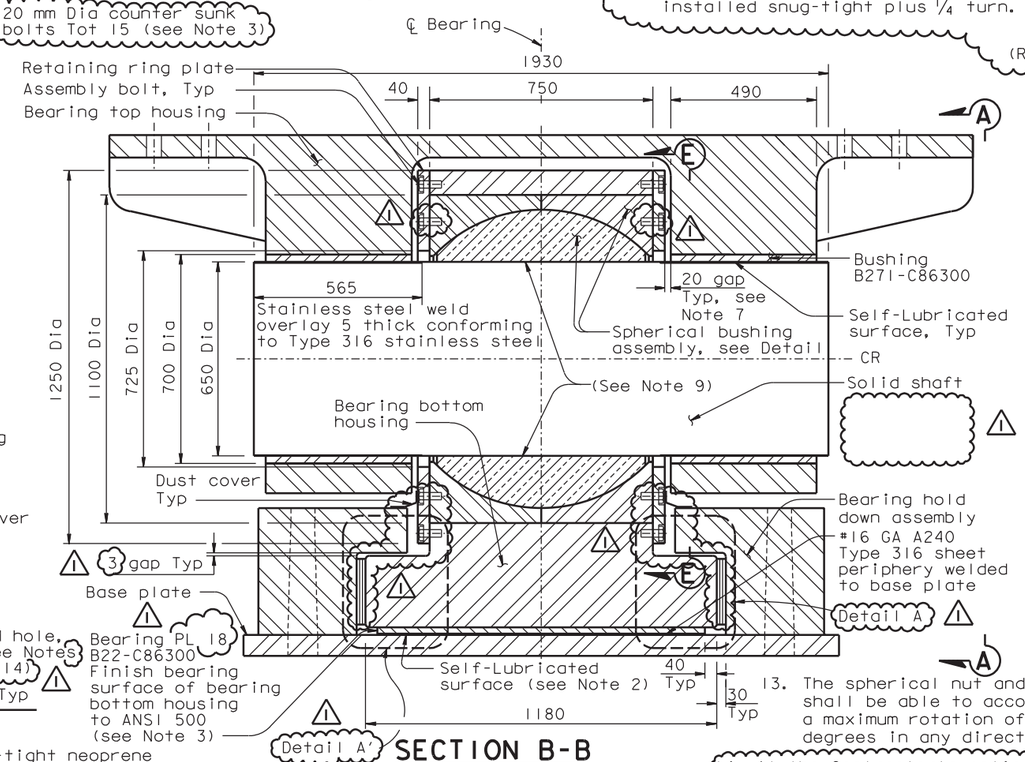

SECTION B-B

1:10

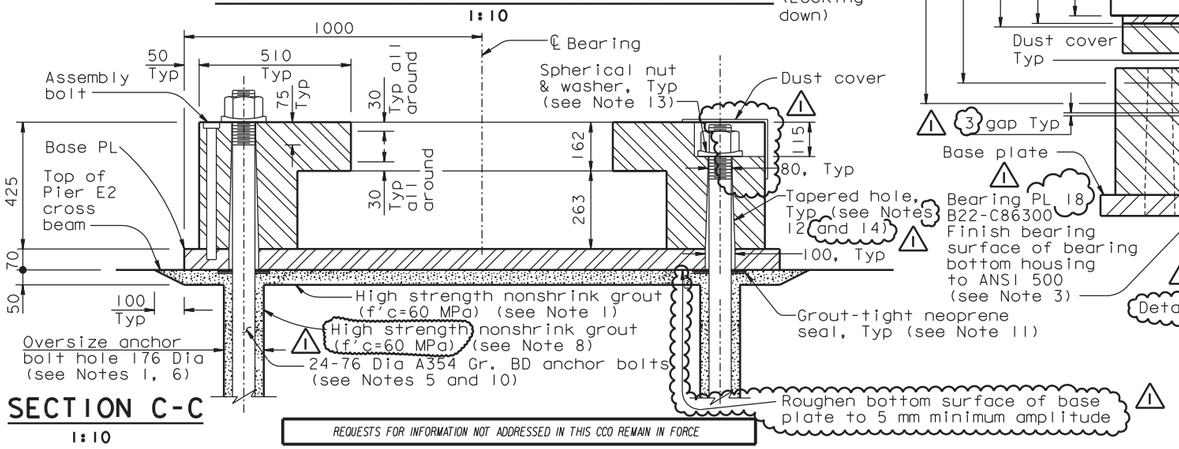

SECTION C-C

1:10

13. The spherical nut and washer shall be able to accomodate a maximum rotation of 3 degrees in any direction.

14. At the Contractor's option, the tapered anchor hole may increase to 200 in lieu of the 100 shown on the plans.

NOTES:

1. The grout pad thickness is shown for information only. The Contractor shall verify in the field the grout pad thickness required to align the center of rotation of the shear key and bearings at 0.750 m from the bottom surface of the box girder.
2. The lubricant shall be Self-lubricated.
3. Bearing plate shall be fastened to bottom of bottom housing using A240 Type 316 counter sunk bolts.
4. All assembly bolts shall be A240 Type 316 unless noted otherwise.
5. The anchor bolt shall be pretensioned to 70% of ultimate tensile strength. Wherever there is no access from the top, anchor bolt shall be prestressed from the bottom.
6. The oversize anchor bolt holes are provided to accommodate construction tolerances.
7. 20 mm gap ±2 mm shall be maintained on both sides during installation.
8. For additional prestressing details, see "Prestressing Notes" sheet.
9. Solid shaft in bushing is press fit.
10. The prestressed anchor bolts shall be wrapped in a PT supplier recommended debonding tape, subject to the review and approval of the Engineer.
11. Grout-tight neoprene seal shown is schematic and is for information only. The seal shall prevent any high strength nonshrink grout from seeping inside the anchor bolt tapered holes during grouting of the base plate. This is necessary for proper stressing of the anchor bolts. The Contractor may propose an alternate detail to suit his erection means and methods, subject to review and approval of the Engineer.
12. For tapered hole details, see "Pier E2 Shear Key Details No. 1" sheet.

REQUESTS FOR INFORMATION NOT ADDRESSED IN THIS CCO REMAIN IN FORCE

ALL DIMENSIONS ARE IN MILLIMETERS UNLESS OTHERWISE SHOWN

R. Valizadeh/V. Toan/Y.L./W.L./F.C.
DESIGN OVERSIGHT
Ryan Valizadeh / Vong Toan / Y. Liu
SIGN OFF DATE 09/26/08

Rev. Date: 5-18-98

MARK	DATE	DESCRIPTIONS	BY	CH'D	CCO#
1	09/26/08	E2 CROSS BEAM	MN	NV	71

REVISIONS

CONTRACT CHANGE ORDER NO. ____
SHEET ____ OF ____

DESIGN	BY M. Nader	CHECKED L. Rus	
DETAILS	BY N. Vo	CHECKED J. Leventini	
QUANTITIES	BY N. Vo	CHECKED J. Leventini	

PREPARED FOR THE STATE OF CALIFORNIA DEPARTMENT OF TRANSPORTATION

R. Manzanarez
PROJECT ENGINEER

BRIDGE NO. 34-0006L/R
KILOMETER POST 13.2/13.9

SAN FRANCISCO OAKLAND BAY BRIDGE
EAST SPAN SEISMIC SAFETY PROJECT
SELF-ANCHORED SUSPENSION BRIDGE
(SUPERSTRUCTURE & TOWER)

PIER E2 BEARING DETAILS NO. 2

ORIGINAL SCALE IN MILLIMETERS FOR REDUCED PLANS 0 10 20 30 40 50 60 70 80 90 100

CU 04
EA 0120F1

DISREGARD PRINTS BEARING EARLIER REVISION DATES

REVISION DATES (PRELIMINARY STAGE ONLY): 04/08/02 07/01/02 12/19/02 05/18/03 12/07/05

SHEET 467R1 OF

FILE => I:\bb\04-012001\sas\contract plans and cco\cco\in progress\cco#71\original 09-26-08\dgn\akbrg02.dgn

100% PS&E

TIME PLOTTED => 15:36:24
DATE PLOTTED => 08 OCT 2008
USERNAME => ptom

DIST.	COUNTY	ROUTE	KILOMETER POST TOTAL PROJECT	SHEET NO.	TOTAL SHEETS
04	SF	80	13.2/13.9	887R2	1204

Caltrans Metric

REGISTERED ENGINEER - CIVIL

12-6-04

PLANS APPROVAL DATE

REGISTERED PROFESSIONAL ENGINEER Marwan N. Nader No. C 054426 Exp. 12/31/09 CIVIL STATE OF CALIFORNIA

The State of California or its officers or agents shall not be responsible for the accuracy or completeness of electronic copies of this plan sheet.

T.Y. LIN / MOFFATT & NICHOL
825 BATTERY STREET
SAN FRANCISCO, CA 94111

Caltrans now has a web site! To get to the web site, go to: http://www.dot.ca.gov

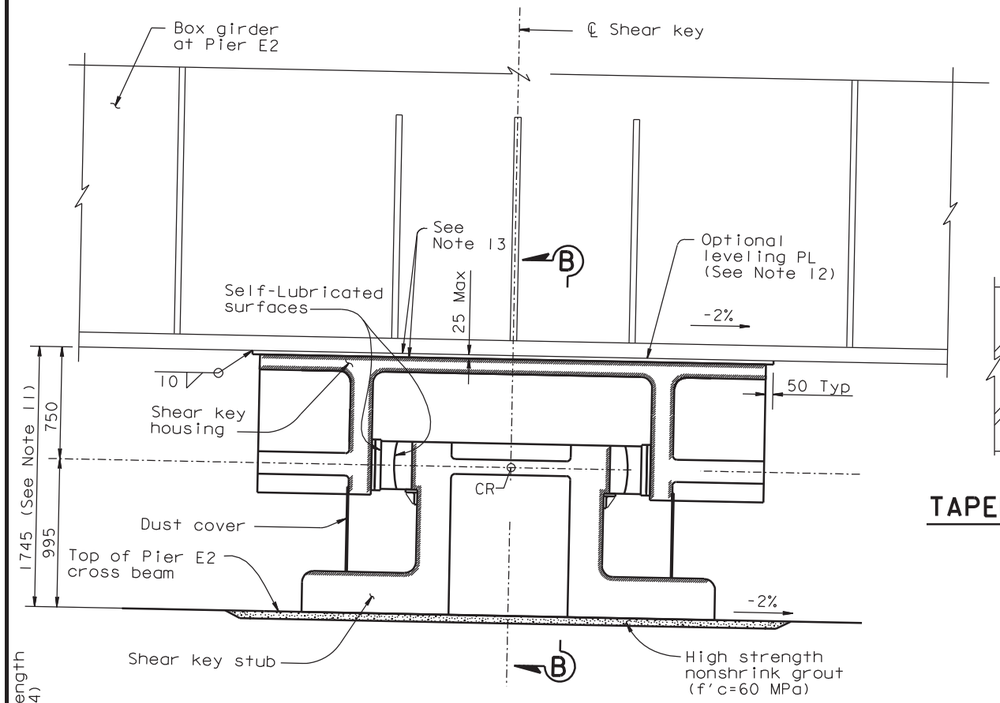

DETAIL B - SHEAR KEY ASSEMBLY

1:20
(Bolts not shown for clarity)
(Looking East)

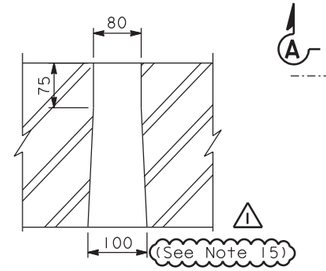

TAPERED HOLE DETAIL

1:5

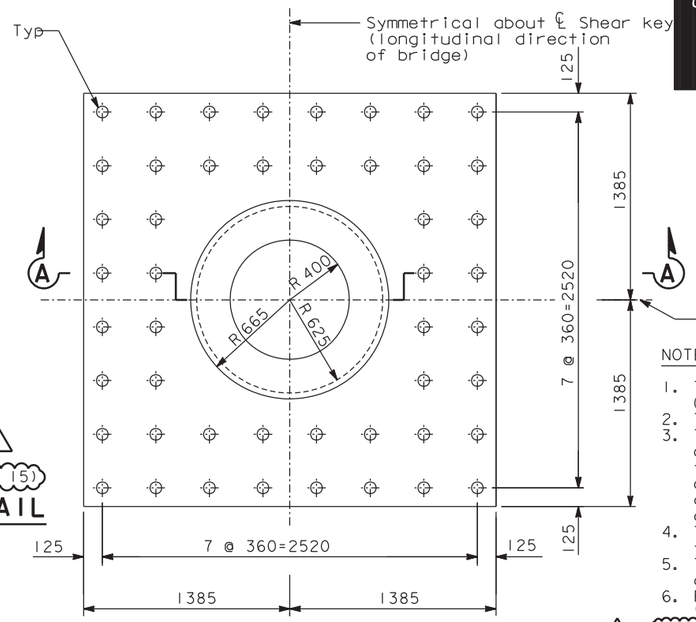

PLAN - SHEAR KEY STUB

1:20
(Anchor bolts not shown for clarity)

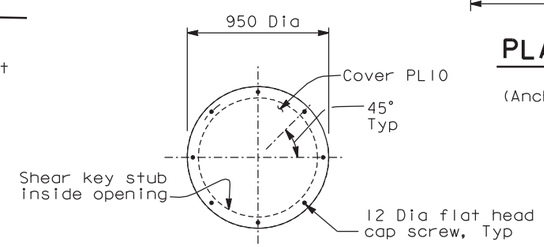

SECTION C-C

1:20

LEGEND:

CR — Center of Rotation

Indicates zone with Level I testing requirements

NOTES:

1. The shear key stub shall be Structural Casting Grade 345.
2. The lubricant shall be self-lubricated.
3. The grout pad thickness is shown for information only. The Contractor shall verify in the field the grout pad thickness required to align the center of rotation of the shear key and bearings at 0.750 m from the bottom surface of the box girder.
4. The anchor bolts shall be pretensioned by jacking to 70% ultimate tensile strength.
5. The oversize anchor bolt holes are provided to accommodate construction tolerances.
6. For additional prestressing details, see "Prestressing Notes" sheet.
7. The prestressed anchor bolts shall be wrapped in a PT supplier recommended debonding tape, subject to the review and approval of the Engineer.
8. The spherical nut and washer shall be able to accomodate a maximum rotation of 3 degrees in any direction.
9. Grout-tight neoprene seal shown is schematic and is for information only. The seal shall prevent any high strength nonshrink grout from seeping inside the anchor bolt tapered holes during grouting of the shear key stub. This is necessary for proper stressing of the anchor bolts. The Contractor may propose an alternate detail to suit their erection means and methods, subject to review and approval of the Engineer.
10. Bolted connection between shear key housing and box girder is slip-critical connection with class B contact surface.
11. The Contractor may provide optional leveling plates to achieve fit-up and level contact surfaces for the bearings and shear keys. The Contractor shall erect the E2 cap beam and E2 girders to the elevations and tolerances specified in the plans and special provisions.
12. Leveling plate shall be attached with plug welds at 0.5 m Max spacing, and a perimeter fillet weld.
13. All faying surfaces of the girder key plate, the shear key housing, and the optional leveling plate shall be machined after all welding for flatness and smoothness as specified for the top of the shear key housing. See "Pier E2 Shear Key Detail No. 2" sheet.
14. Extension length for anchor bolts at "E" Line and "W" Line shear keys shall be long enough to engage hydraulic jack.
15. At the Contractor's option, the tapered anchor hole may increase to 200 in lieu of the 100 shown on the plans.
16. The top shear key stub shaft section shall be "snug-fit" inside the spherical ring with a diameter gap between ring and stub of 1 mm Max.
17. At the Contractor's option, 10 mm radius may be used to facilitate stressing of anchor bolts.

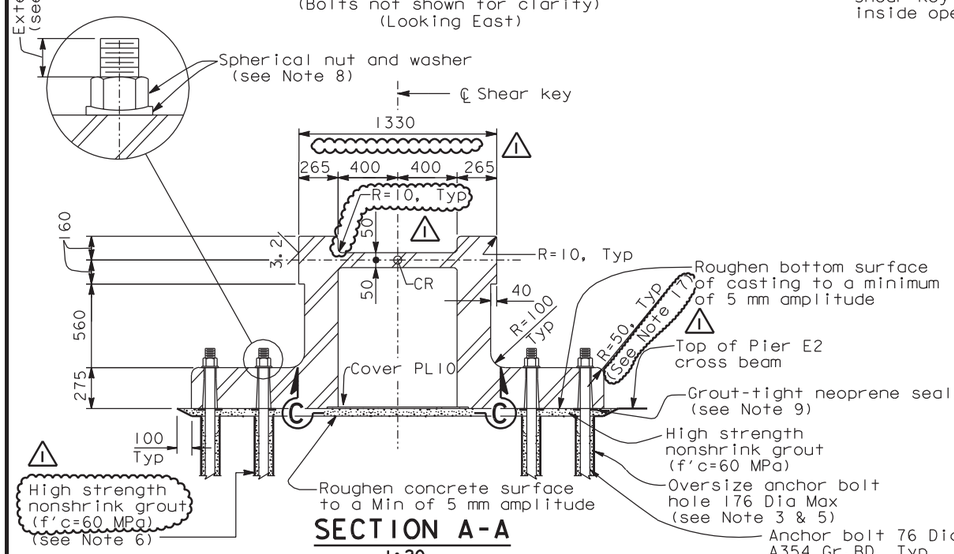

SECTION A-A

1:20

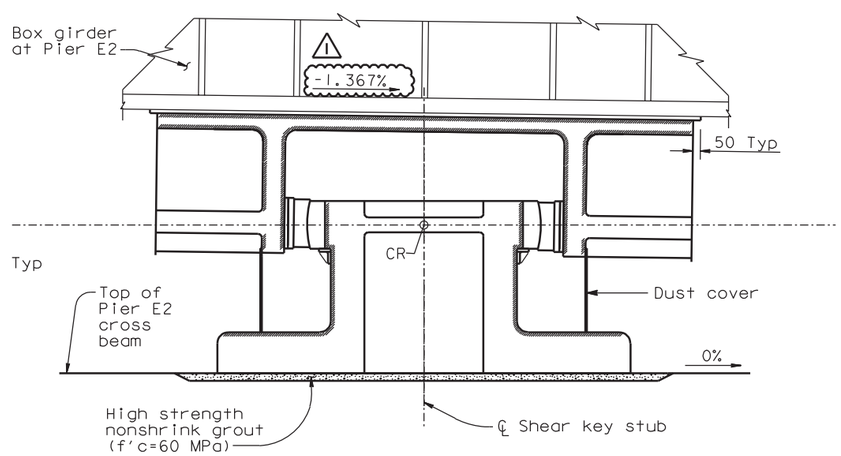

SECTION B-B

1:20
(Bolts not shown for clarity)

ALL DIMENSIONS ARE IN MILLIMETERS UNLESS OTHERWISE SHOWN

CONTRACT CHANGE ORDER NO. ____
SHEET ____ OF ____

REQUESTS FOR INFORMATION NOT ADDRESSED IN THIS CCO REMAIN IN FORCE

MARK	DATE	DESCRIPTIONS	BY	CH'D	CCO#
2	07/17/09	E2 CROSS BEAM	MN	NV	71
1	09/26/08	E2 CROSS BEAM	MN	NV	71

REVISIONS

R. Valizadeh/V. Toan/Y.L./W.L./F.C.
DESIGN OVERSIGHT

Roya Valizadeh / Vong Toan / Y. Liu
SIGN OFF DATE 07/17/09

Rev. Date: 5-18-98

	BY	CHECKED
DESIGN	M. Nader	J. Denis
DETAILS	N. Vo	J. Denis
QUANTITIES	N. Vo	J. Denis

PREPARED FOR THE STATE OF CALIFORNIA DEPARTMENT OF TRANSPORTATION

R. Manzanarez
PROJECT ENGINEER

BRIDGE NO. 34-0006L/R
KILOMETER POST 13.2/13.9

SAN FRANCISCO OAKLAND BAY BRIDGE
EAST SPAN SEISMIC SAFETY PROJECT
SELF-ANCHORED SUSPENSION BRIDGE (SUPERSTRUCTURE & TOWER)

PIER E2 SHEAR KEY DETAILS NO. 1

ORIGINAL SCALE IN MILLIMETERS FOR REDUCED PLANS 0 10 20 30 40 50 60 70 80 90 100

CU 04
EA 0120F1

DISREGARD PRINTS BEARING EARLIER REVISION DATES

REVISION DATES (PRELIMINARY STAGE ONLY) 04/08/02 01/04/02 12/18/02 05/16/03 12/01/05

SHEET 470R2 OF

FILE => I:\bb\04-012001\sas\contract plans and cco\cco\cco=71\4-revision 07-17-09\dgn\aksrd01a.dgn

100 % PS&E

USERNAME => altshansk DATE PLOTTED => 17 JUL 2009 TIME PLOTTED => 15:10:30

DIST.	COUNTY	ROUTE	KILOMETER POST TOTAL PROJECT	SHEET NO.	TOTAL SHEETS
04	SF	80	13.2/13.9	888R1	1204

REGISTERED ENGINEER - CIVIL

12-6-04

PLANS APPROVAL DATE

REGISTERED PROFESSIONAL ENGINEER Marwan N. Nader No. C 054426 Exp. 12/31/09 CIVIL STATE OF CALIFORNIA

The State of California or its officers or agents shall not be responsible for the accuracy or completeness of electronic copies of this plan sheet.

T.Y. LIN / MOFFATT & NICHOL
825 BATTERY STREET
SAN FRANCISCO, CA 94111

Caltrans now has a web site! To get to the web site, go to: http://www.dot.ca.gov

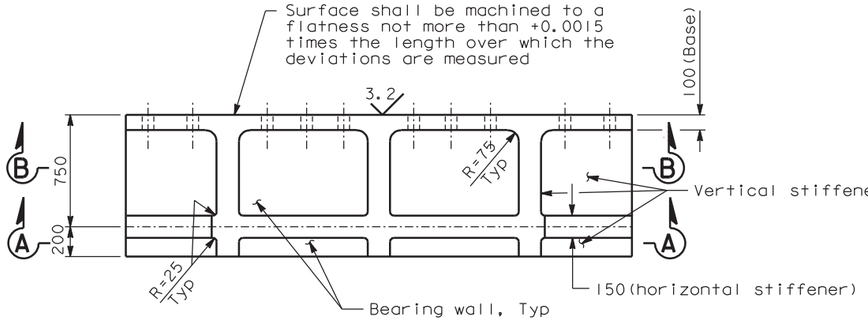

ELEVATION - SHEAR KEY HOUSING

1:20

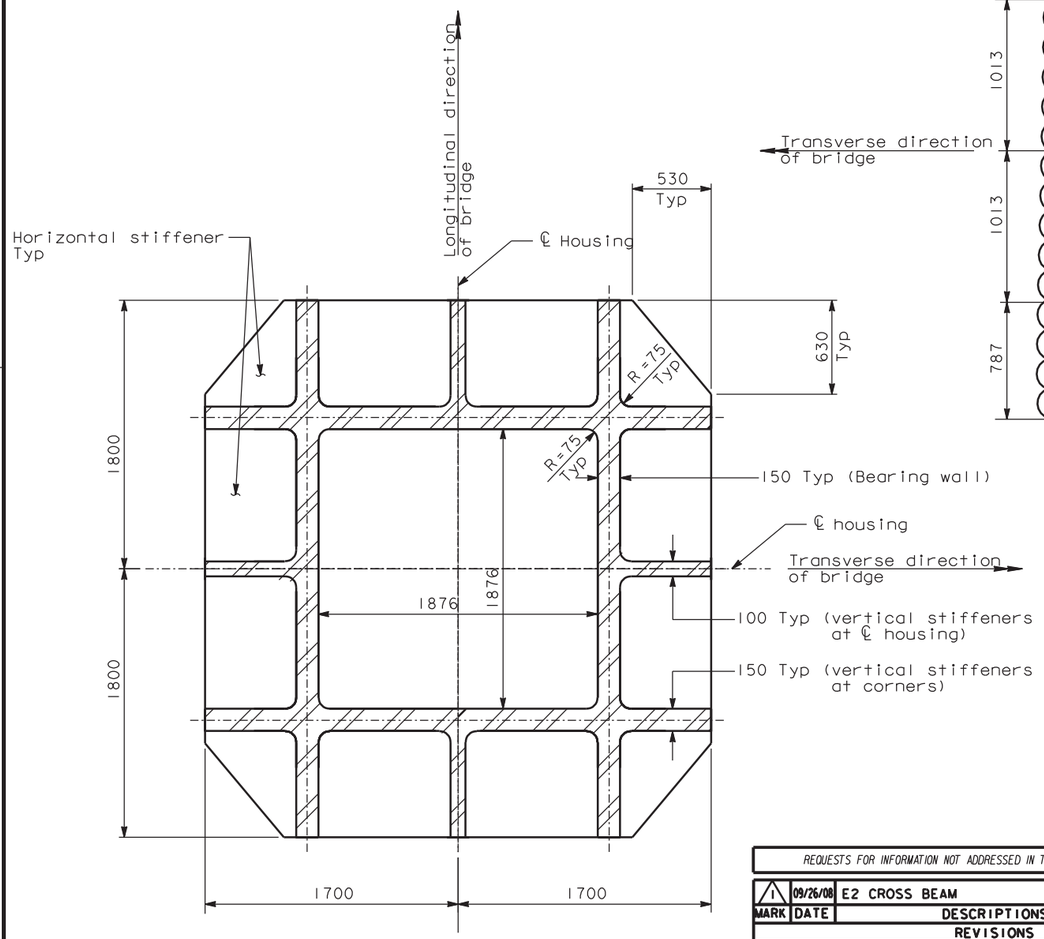

SECTION A-A

1:20

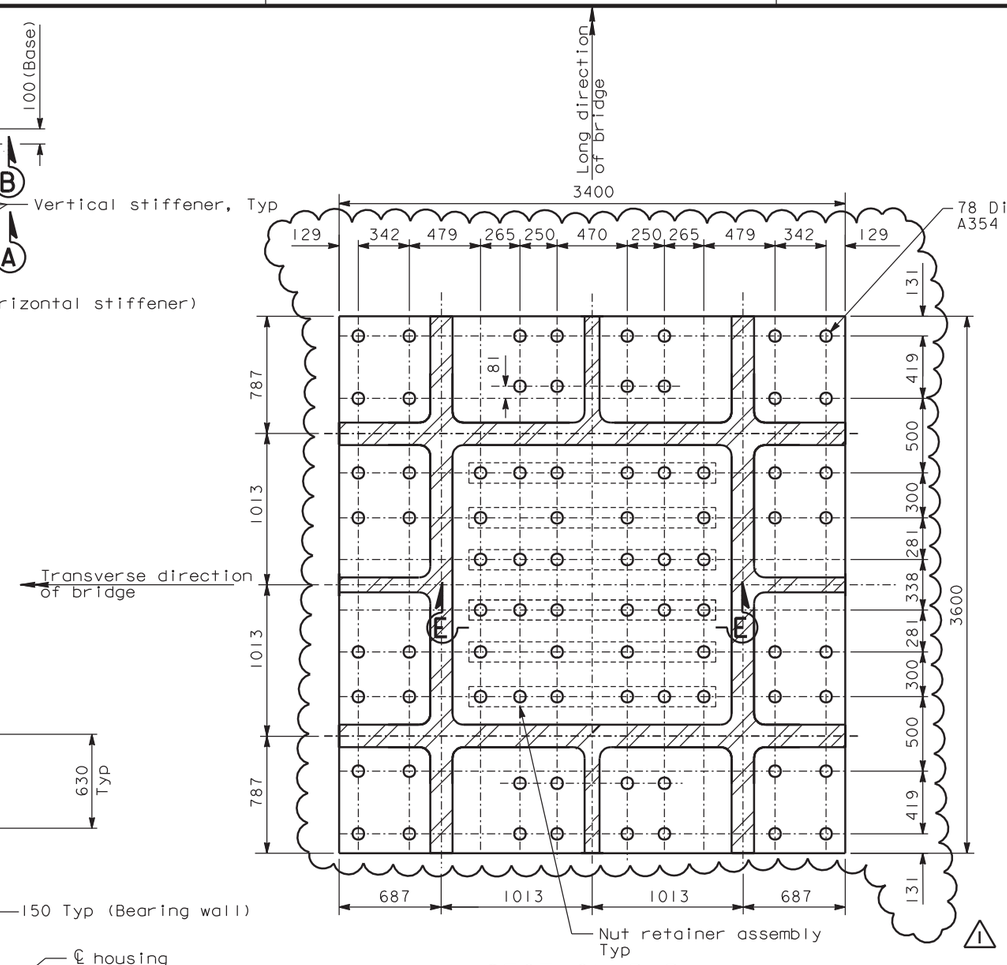

SECTION B-B

(For details not shown see Section A-A)

1:20

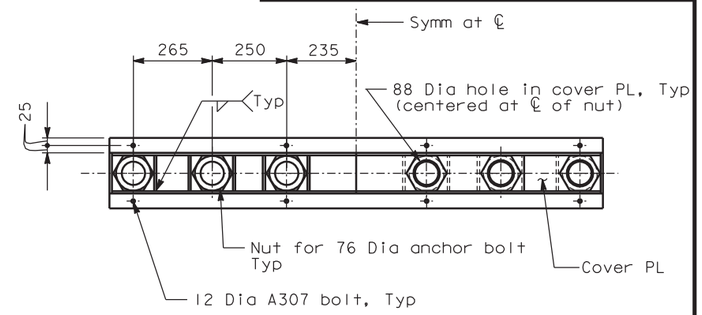

SECTION C-C

1:10

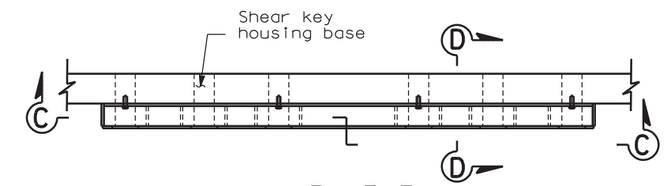

VIEW E-E

NUT RETAINER ASSEMBLY-ELEVATION

1:10

(All plates 8 mm thick)

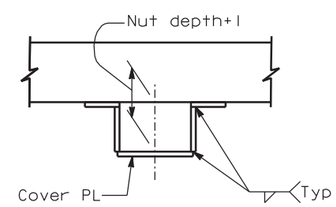

SECTION D-D

1:5

NOTES:

1. The shear key housing shall be Structural Casting Grade 345.
2. The shear key housing bolt layout shall accommodate the girder and crossbeam plate stiffener location. For girder details at Pier E2, see "Girder At Pier E2 details" sheet. For crossbeam details at pier E2, see "Crossbeam at Pier E2" sheets.
3. Bolt hole location shall be cross checked with the box girder and crossbeam stiffener layout before drilling holes. Bolt edge distance and clearance for tightening shall be verified and submitted for review and approval by the Engineer. A template shall be used to drill bolt holes in shear key housing and girder key plate to ensure hole matching.
4. The anchor bolts shall be pretensioned to 70% of ultimate tensile strength.
5. Nut retainer assemblies including nuts shall be installed to shear key housing prior to assembling housing to bushing and stub.
6. Machined washers at bolt heads shall be used if necessary at stiffener fillets.

REQUESTS FOR INFORMATION NOT ADDRESSED IN THIS CCO REMAIN IN FORCE

MARK	DATE	DESCRIPTIONS	BY	CH'D	CCO#
1	09/26/08	E2 CROSS BEAM	MN	NV	71

REVISIONS

CONTRACT CHANGE ORDER NO. ____
SHEET ___ OF ___

ALL DIMENSIONS ARE IN MILLIMETERS UNLESS OTHERWISE SHOWN

R. Valizadeh/V. Toan/Y.L./W.L./F.C.
DESIGN OVERSIGHT
Y. Liu
SIGN OFF DATE 09/26/08

	BY	CHECKED
DESIGN	M. Nader	J. Denis
DETAILS	N. Vo	J. Denis
QUANTITIES	N. Vo	J. Denis

PREPARED FOR THE STATE OF CALIFORNIA DEPARTMENT OF TRANSPORTATION

R. Manzanarez
PROJECT ENGINEER

BRIDGE NO. 34-0006L/R
KILOMETER POST 13.2/13.9

SAN FRANCISCO OAKLAND BAY BRIDGE
EAST SPAN SEISMIC SAFETY PROJECT
SELF-ANCHORED SUSPENSION BRIDGE
(SUPERSTRUCTURE & TOWER)

PIER E2 SHEAR KEY DETAILS NO. 2

Rev. Date: 5-18-98

ORIGINAL SCALE IN MILLIMETERS FOR REDUCED PLANS 0 10 20 30 40 50 60 70 80 90 100

CU 04
EA 0120F1

DISREGARD PRINTS BEARING EARLIER REVISION DATES

REVISION DATES (PRELIMINARY STAGE ONLY): 04/08/02 07/01/02 12/18/02 05/18/03 12/01/05

SHEET 47 OF 1R1

FILE => I:\bb\04-012001\sas\contract plans and cco\cco\in progress\cco#71\original 09-26-08\dgn\aksrd01b.dgn

100% PS&E

DATE PLOTTED => 08 OCT 2008 TIME PLOTTED => 15:40:47

USERNAME => ptom

DIST.	COUNTY	ROUTE	KILOMETER POST TOTAL PROJECT	SHEET NO.	TOTAL SHEETS
04	SF	80	13.2/13.9	981R2	1204

Caltrans Metric

REGISTERED ENGINEER - CIVIL

12-6-04

PLANS APPROVAL DATE

REGISTERED PROFESSIONAL ENGINEER John Sun No. C 54648 Exp. 12/31/05 CIVIL STATE OF CALIFORNIA

The State of California or its officers or agents shall not be responsible for the accuracy or completeness of electronic copies of this plan sheet.

T.Y. LIN / MOFFATT & NICHOL
825 BATTERY STREET
SAN FRANCISCO, CA 94111

To get to the web site, go to: http://www.dot.ca.gov

POST-TENSIONING CHARACTERISTICS ASSUMED FOR DESIGN

1. Prestressing strand
   - Friction curvature coefficient : 0.20
   - Friction wobble coefficient : 0.0007/m
   - Anchor set : 6 mm
2. Prestressing monostrand (Tie-down cables only)
   - Friction curvature coefficient : N/A
   - Friction wobble coefficient : 0.0007/m
   - Anchor set : 6 mm
3. High strength rods (where applicable)
   - Friction curvature coefficient : 0.25
   - Friction wobble coefficient : 0.0007/m
   - Anchor set : 2 mm
4. High strength PT rod (75 mm)
   - Friction curvature coefficient : 0.25
   - Friction wobble coefficient : 0.0012/m
   - Anchor set : 2 mm
5. Prestressing strands shall conform to ASTM A416, low relaxation, 7-wire strands, with guaranteed minimum ultimate strength of 1860 MPa.
6. Prestressing monostrands (Tie-down cables only) shall conform to ASTM A416, low relaxation, 7-wire strands, with guaranteed minimum ultimate strength of 1860 MPa.
7. High strength rods (ASTM A354 Grade BD) shall have a guaranteed minimum ultimate strength of 965 MPa.
8. High strength rods (ASTM A354 Grade BC) shall have a guaranteed minimum ultimate strength of 793 MPa.
9. High strength rods (ASTM A722) shall have a guaranteed minimum ultimate strength of 1030 MPa.
10. High strength PT rods (75 mm) shall have a guaranteed minimum ultimate strength of 1030 MPa.

PRETENSIONING/GROUTING SEQUENCE

1. The pretensioning and grouting sequence of the Pier W2 prestressing strand tendons and of the Pier W2 high strength anchor rods (anchor bolts) shall be included with the Contractor's erection plan. The Contractor shall submit the erection plan along with the pretensioning and grouting sequence to the Engineer for review and approval.
2. The pretensioning and grouting sequence of the Pier T1 (Tower) high strength anchor rods (anchor bolts) shall be included with the Contractor's erection plan. The Contractor shall submit the erection plan along with the pretensioning and grouting sequence to the Engineer for review and approval.
3. The pretensioning and grouting sequence of the Pier E2 prestressing strand tendons and of the Pier E2 Bearing and Pier E2 Shear Key high strength anchor rods (anchor bolts) shall be included with the Contractor's erection plan. The Contractor shall submit the erection plan along with the pretensioning and grouting sequence to the Engineer for review and approval.

STRESSING FORCE LIMITS

1. All high strength anchor rods (anchor bolts) shall be pretensioned by jacking to 70% of their ultimate tensile strength, unless noted otherwise.
2. Force in all permanent high strength prestressing tendons shall not exceed 70% of the guaranteed minimum ultimate strength of the tendon after seating.
3. Force in all permanent high strength rods (anchor bolts) shall not exceed 70% of the guaranteed minimum ultimate strength of the bar after seating.

CONCRETE

1. A minimum compressive strength of 36 MPa (f'ci) shall be attained in the concrete of Pier W2 and Pier E2 crossbeams prior to stressing.

HIGH STRENGTH NONSHRINK GROUT

1. All high strength nonshrink grout shall attain a minimum compressive strength of f'ci=75% f'c (MPa) prior to being subjected to subsequent loading and before pretensioning operations.

PT DUCTS

1. Ducts for prestressing strand tendons and high strength rods (anchor bolts) shall consist of galvanized corrugated steel ducts, unless noted otherwise.
2. Prebent ducts shall be used for prestressing tendons with radius less than 10 m.
3. Prestressing strand tendon suppliers shall provide and use extra strong steel pipes (ASTM A53 Type S, Grade B (fy = 240 MPa) and necessary hardware connecting the steel pipes to galvanized corrugated steel ducts where radius of PT ducts is less than 5000 mm.
4. Based on the Contractor's stressing sequence, local strengthening of PT ducts (e.g. extra strong steel pipes) at critical location's may be required.

GROUT FOR PT DUCTS/PIPE SLEEVES

1. Tie-down cables with monostrands shall not be grouted.
2. Ducts shall be grouted with nonshrink grout (f'c=60 MPa).
3. Nonshrink grout shall attain a strength of 36 MPa (f'ci) minimum before being subjected to stresses due t subseqent loading.

BLOCKOUT CONCRETE

1. After completion of all pretensioning and grouting operations, the blockout closure reinforcement shall be bent into place over the anchors before the blockouts are filled with concrete (f'c=60 MPa).

REGISTERED PROFESSIONAL ENGINEER Marwan N. Nader No. C 054426 Exp. 12/31/07 CIVIL STATE OF CALIFORNIA

FOR REVISIONS ONLY

MARK	DATE	DESCRIPTIONS	BY	CH'D	CCO#
2	02/28/07	TIE-DOWN CABLE PRESTRESSING NOTES	JD	AS	23
1	07/21/06	CONCRETE STRENGTH, ISD	MN	NV	23

REVISIONS

CONTRACT CHANGE ORDER NO. ____
SHEET ___ OF ___

ALL DIMENSIONS ARE IN MILLIMETERS UNLESS OTHERWISE SHOWN

SAN FRANCISCO OAKLAND BAY BRIDGE
EAST SPAN SEISMIC SAFETY PROJECT
SELF-ANCHORED SUSPENSION BRIDGE
(SUPERSTRUCTURE & TOWER)

PRESTRESSING NOTES

R. Valizadeh/V. Toan/Y.L./W.L./F.C.
DESIGN OVERSIGHT
SIGN OFF DATE 02/28/07

	BY	CHECKED
DESIGN	J. Sun	J. Duxbury
DETAILS	J. Sun	J. Duxbury
QUANTITIES	J. Sun	J. Duxbury

PREPARED FOR THE STATE OF CALIFORNIA DEPARTMENT OF TRANSPORTATION

R. Manzanarez
PROJECT ENGINEER

BRIDGE NO. 34-0006L/R
KILOMETER POST 13.2/13.9

Rev. Date: 5-18-98

ORIGINAL SCALE IN MILLIMETERS FOR REDUCED PLANS 0 10 20 30 40 50 60 70 80 90 100

CU 04
EA 0120F1

DISREGARD PRINTS BEARING EARLIER REVISION DATES

REVISION DATES (PRELIMINARY STAGE ONLY) 04/08/02 07/24/02 12/19/02

SHEET 564R2 OF

FILE => I:\bb\04-012001\sas\contract plans and cco\cco\cco#23\updates\agptn01.dgn

100% PS&E

DATE PLOTTED => 16 MAR 2007 TIME PLOTTED => 13:13:32

USERNAME => bkwok

July 23, 2007

PROJECT INFORMATION

04-0120F4
Self Anchored Suspension Bridge

SUBJECT

Office of Structural Materials (OSM) Audit of Dyson Company.

OVERVIEW

The Dyson Company successfully completed the Material Fabrication Self-Qualification Audit (MFSQA) on April 13, 2007, per Special Provisions section 8-4.01. The Department audited Dyson facilities on July 10, 2007. Present during the audit were representatives of OSM: Mr. John Kinsey, CALTRANS Senior Level III, and Mr. Markian Petrina, Structural Materials Representative; and representatives of American Bridge/Fluor, a Joint Venture (ABF): Mr. Dan Radu, ABF Steel Fabrication Manager and Mr. Charles Kanipicki, P.E., ABF Quality Control Manager. Representing the fabricator was Mr. Steve Marsh, Dyson Quality Assurance Manager.

DISCUSSION

The audit opened with opening remarks by Mr. Kinsey, who explained the function of OSM and the purpose of the audit. Mr. Marsh then provided a brief history of the Dyson Company. For more than a century (founded in 1884, according to Dyson promotional materials), Dyson Company has been producing fasteners for various purposes. Following a 1992 bankruptcy, Mr. Ted Wolfe, Sr., became the principal owner; various family members now occupy important positions within the company, including Mr. Ted Wolfe, Jr., General Manager; Ms. Kristin Wolfe, Sales Manager.

As constituted today, Dyson is comprised of four divisions:

1. Dyson Rod, the division of primary interest for this audit, which produces large-diameter anchor rods, primarily for the wind turbine market;
2. Dyson Fork, which produces lift truck forks;
3. Dyson, the division of secondary interest for this audit, which produces forgings and large fasteners;
4. Dyson Dependable, which fabricates ASME-certified fasteners and materials for stringent-specification military and nuclear applications.

According to Mr. Marsh, the distinction between the four Dyson divisions is largely administrative: equipment and the approximately 100 employees are shared between the four divisions interchangeably.

Apart from these divisions, Dyson purchased Texas Bolt & Nut out of bankruptcy. Texas Bolt is currently a distribution point for fasteners, particularly nuts, as well as stud production. Texas Bolt deals heavily with overseas business.

Following his historical and organizational summaries, Mr. Marsh described the process for material handling. He stated that material is often prequalified through mill certification (mill cert) review, eliminating the need for receiving inspectors to verify the suitability of raw material, primarily rod, for intended purpose. Mr. Marsh clarified by stating that only the mill certifications were pre-qualified for appropriate chemical and mechanical characteristics. Certifications are kept on record between one and seven years, typically leaning toward the longer period. Mr. Marsh explained that retention of records is to assist with Dyson's internal traceability.

Mr. Marsh also elaborated on the fact that records are maintained for longer periods in association with what he called "semi-finished" products, particularly A 325 bolts. A variety of material is forged and heat treated, then sent into stock as blanks. It is kept in storage, after which it is wheel abraded and finished. OSM auditors saw this material in storage bins during the tour. A significant proportion of such "semi-finished" product was heavily corroded (Picture 1) and covered with large amounts of rust; Mr. Marsh stated that the rust would be made irrelevant by machining down heavily-corroded bolt shafts and wheel-abrading corroded bolt heads. OSM did not observe any such operations.

Orders of raw materials are based on ASTM requirements, and any special requirements from a given contract. When those are determined, the manufacturing sequence is adapted to satisfy each situation. The customer is then provided the manufacturing sequence and any customer hold points are included in the process.

According to Mr. Marsh, ASTM A 354 BC and BD fasteners undergo full-size testing, i.e., full-diameter cross-section, as opposed to coupons machined from sampled fasteners and rods, as well as coating certification. Although Dyson does not have certified nondestructive testing (NDT) personnel, when the customer requests, Dyson personnel perform informal MT, particularly on the outside elbows of bent rods.

Mr. Marsh informed OSM auditors that NDT where it is part of the specification, such as for A 490 bolts, is sent to outside laboratories with qualified NDT personnel. For A 490 bolts, Dyson's preference is magnetic particle testing (MT). Stork-Herron laboratories, which was also audited on this trip (mechanical testing: pass; NDT: contingent pass; please see relevant report), was specified as the NDT laboratory with full capabilities for MT and liquid penetrant testing (PT). Mr. Marsh also mentioned Ultralabs, Inc., which he states are NADCAP-qualified and are capable of MT, PT, and radiographic testing (RT; RT is not relevant to Dyson's work for ABF).

Mr. Kinsey informed Mr. Marsh that if Dyson wishes to have NDT performed at Ultralabs, they must submit an MFSQA and be audited by the Department before being acceptable on the project; Mr. Marsh indicated that he would consider this, although he believed that Stork-Herron would be capable of handling any NDT by themselves, as NDT requirements are expected to be minor for relatively small orders of A 490 bolts,.

Rotational capacity (ro-cap) testing was also discussed. Mr. Marsh indicated that Dyson was seriously considering the purchase of a large, automated ro-cap machine manufactured by Skidmore, the primary manufacturer of ro-cap equipment. According to Mr. Marsh, this machine is superior to human testing on a standard, manual Skidmore because the automated machine holds a constant force and there is no start-and-stop associated with manual machines.

However, according to Mr. Marsh, apart from hardness, threading, and rotational capacity, all other tests, such as wedge testing, are farmed out to laboratories. Mr. Marsh mentioned laboratories in Pittsburgh (name not provided) that is capable of testing large A 354 BD rods whose testing requirements exceed the 400 kip capacity that Mr. Marsh says is possessed by Stork-Herron. However, Mr. Marsh believed that it will not be necessary to employ the Pittsburgh laboratory. It is believed by Dyson that facilities in the Cleveland area will be adequate for fasteners and shorter rods.

For galvanizing, North American Galvanizing (audited on this trip: Fail) and The Art Galvanizing (also audited on this trip: Conditional Pass). North American was characterized as Dyson's large-capacity galvanizer, while The Art is for smaller orders, and Mr. Marsh spoke positively about The Art's capabilities.

Mr. Kinsey discussed special requirements for galvanizing with Mr. Marsh, including the Department's prohibition of stripping/re-dipping material with inadequate galvanizing, as well as the requirements for blasting A 354 BD material as opposed to pickling, prior to galvanizing. Mr. Marsh expressed familiarity with the A 354 BD requirements, and indicated that this would be part of Dyson's purchase order for galvanizing. He also indicated that galvanizers would be informed that stripping/re-dipping would not be permitted.

In response to Mr. Kinsey's question about Dyson's ability to verify the work of galvanizers, Mr. Marsh indicated that Dyson has no capability for testing galvanizing thickness. Dyson was not anticipating such a requirement, and Mr. Marsh indicated that it would be something examined by Dyson management in light of OSM's emphasis that Dyson, not the subcontractor, was accountable for the proper thickness of coating on all fasteners.

In addition, OSM and ABF discussed the possibility of anchor rods being painted. Mr. Kinsey indicated that should this course of action be chosen, Dyson would be responsible for ensuring that whoever paints the rods must be certified.

Mr. Marsh expressed willingness to work with CALTRANS to perform sampling. He stated that Dyson is accustomed to such practices from what Mr. Marsh characterized as frequent previous work with the Pennsylvania and Missouri Departments of Transportation.

The necessity for ensuring lot and heat segregation was emphasized by Mr. Kinsey. Mr. Marsh indicated that his inspectors are not aware of "preapproved" mill certs, and that only Mr. Marsh and his Assistant QA manager, Ms. Diane Smith, are aware of this fact. Mr. Marsh also indicated that lots are physically separated to prevent mixing, and Dyson understands segregation to maintain integrity. Dyson's tracking system has a randomly-generated three-letter code for each separate purchase order. If more than one container is needed for an order, a number is added to the three-letter identifier, as shown in Picture 1.

Heat treatment was also discussed. Mr. Marsh indicated that Dyson is capable of heat treating rods up to approximately 12 feet in length; the longer rods required for the contract, some of them 30 to 40 feet long, will be shipped to T.C. Industries in the Chicago area. Mr. Marsh indicated that T.C. Industries will be capable of handling such lengths of rod.

As for shipment of product, Mr. Marsh indicated that this is a function of the product itself, taking into account fragility and coatings. Long rods will be burlap-wrapped and banded with metal strapping and sent on flatbed trucks. Dyson does possess shrink wrap capacity. Fasteners will be in cardboard half-keg boxes attached to pallets with nylon webbing. Mr. Marsh stated that no problems were encountered with shipment of fasteners to the Tacoma Narrows project in Washington. Preassembly of parts may be done if indicated in the contract, although Mr. Radu and Mr. Marsh pointed out that it is not standard practice to assemble mechanically-galvanized parts.

Mr. Radu indicated that ABF will not permit winter shipment, and that most products will be contained in enclosed trailers, and his confidence in Dyson's good record for shipping. Mr. Kinsey emphasized that Dyson is responsible for its vendors' methods.

Dyson is reports normal production capability of attaining hardness within ±2 on the Rockwell C scale. If a closer tolerance than ±2 is required, smaller lots and more careful monitoring is required. Mr. Marsh indicated that the maximum limit is generally on tensile strength, not hardness, and that the tensile requirements are generally adequate if the proper hardness is met. According to Mr. Marsh, subcontractors are held to the same standards that Dyson applies to itself.

When inspection was discussed, Mr. Marsh indicated that all required testing will be documented, including mechanical testing from suppliers, who will have to prove conformance to contract requirements as ordered by Dyson.

Mr. Marsh also indicated that Dyson has three inspectors. None of these inspectors are qualified to SNT-TC-1A standards for visual inspection. Mr. Marsh expressed a high degree of

confidence in his chief inspector, who performs calibrations and has been with Dyson for more than 20 years. The chief inspector's assistant has been with Dyson for approximately 6 months, and has previous forging experience and OSM was told also has a solid understanding of the process. The floor inspector is still learning his duties, and performs "spot" inspections at various places in the shop; Mr. Marsh indicated that although he is tested and qualified to Dyson's internal standards, the floor inspector's skills are in a state of being improved.

Ms. Debbie Smith, Mr. Marsh's personal assistant, holds the title of Assistant QA Manager and is not an inspector. Ms. Smith's functions are administrative in support of Mr. Marsh's duties as QA Manager, and she also reportedly handles some of the mill cert prequalification for incoming material. On the day of the audit, Ms. Smith was on scheduled vacation.

Mr. Kinsey discussed the METS green tag and orange tag processes for releasing material. It was emphasized to Dyson that METS must be given the opportunity to inspect material before it is released between facilities for various parts of the work.

During the course of the conversation Mr. Marsh stated that he is a part-owner of the Dyson Company. He expressed no concern about this possibly affecting his judgment as QA Manager. Mr. Marsh stated that he believed his part-ownership strengthened his desire for quality as someone directly concerned with the company's reputation.

During a tour of the Dyson Company facilities, the following areas were seen:

- Receiving
- Holding Area
- Forging and Bolt Production
- Heat Treatment
- Machining
- Inspection
- Nut Lubrication
- Shipping

Receiving

In the receiving area (Picture 2), it was noted that many pieces of rod and steel ingot stock rested on the ground (Picture 3), and a number of pieces had no traceability (Picture 3). The receiving clerk appeared unfamiliar with the concept of traceability, and indicated that the unmarked random pieces of stock were "never thrown away" and had "been here forever." He was not able to provide a link between this material and documentation. There was also no checklist, chart, or book for the receiving inspector to examine the material to certain specifications.

In response to Mr. Kinsey's question, the receiving inspector remarked that he had never seen the need to reject material. Both he and Mr. Marsh spoke repeatedly of "hardware" review, of the actual product, as opposed to "software" review, of the computerized certifications; the link between the two appeared tenuous at best on the material receiving end.

The receiving inspector remarked that if the heat number is mismarked or illegible, it is not a reason to reject. If the chemsistry and steel grade are correct, the material is accepted. Customer (Picture 4) and Dyson (Picture 5) tags on stock material identify most material.

Stock material, which OSM was told could be kept for many years, is kept in an area separate from immediate-use (1-2 weeks) material. The Dyson standard for straightness is one-eighth (1/8) inch distortion per five (5) feet of length, although numerous bundles were observed with visible "snaking" distortion, as well as large bends (Picture 6).

The receiving inspection is part of the forge shop, and not a QC function. QC appears to have little day-to-day contact with receiving and material actually stored in the stock yard.

Mr. Kinsey requested to verify the documentation on a randomly-selected bundle of rods (Picture 7). Dyson personnel were able to produce satisfactory records in a reasonable amount of time.

Holding Area

In the holding area, numerous bins of material were observed. One bin had no identification tag. Mr. Marsh was unable to identify this material. The bolts appeared to be ASTM F 568M. Mr. Marsh questioned one of the forge workers in the area; this individual identified the material to Mr. Marsh with what appeared to be a high level of confidence.

All other bins observed in this area by OSM, many of which contained similar F 568M bolts awaiting threading, were properly marked. However, many of the travelers appeared to be dirty and in some cases illegible. Mr. Marsh pointed out that there were duplicates in each envelope for such an eventuality. However, the second (clean) copy was not necessarily the version that was updated by production personnel.

Forging and Bolt Production

OSM observed forged materials, particularly large nuts. The forging ovens are depicted in Picture 8. Mr. Marsh initially stated that large nuts were completely identified by heat number; however, none such was found. Mr. Marsh later amended his statement to say that there will be no heat number added until after heat treatment. A picture of the nuts appears in Picture 9.

In addition, OSM observed the manual process of producing A 325 bolts (Picture 10). The bolt shafts were heated three at a time in an oven. A worker manually removed each shaft, inserted it into a press, and the head was forged on the shaft by four impacts. The bolts were then placed into a large holding bin. They subsequently move on to machining for threading.

The foreman's office is in the middle of the forging and bolt production area. There are no standards or specifications kept in the office. These are maintained in the inspection office.

In the outdoor storage area for what Dyson classifies “semi-finished” product, headed but unthreaded bolts await finishing. As previously mentioned, it was noted that many of these products (Picture 11) are heavily corroded, and Mr. Marsh indicated that the corrosion would be machined or abraded away,

Heat Treatment

The heat treatment area is one of the largest at Dyson. Dyson states that they have four temperature-surveyed, calibrated ovens in operation, along with a 12,000 gallon oil quench bath, and a 6,000 gallon water and synthetic oil quench bath.

Dimensional verification before heat treating is carried out by heat treating production personnel. The method for tracking verifications is apparently on a written record (Picture 12). It appears that Dyson does not have a method for marking tubs or buckets that have been checked. Mr. Kinsey remarked that soapstone is frequently employed by other facilities for such checks, but Mr. Marsh did not seem to regard the effort required for such tracking as worthwhile.

OSM observed ovens in operation, and inspected temperature records. It appears that temperature recording paper is not placed in the strip-chart recording thermometer at any consistent time. They are not replaced at midnight for the “next day,” but sometime between the end of the third (overnight) shift, which ends at 6 AM, and the first few hours of the first (day) shift (Picture 13).

OSM auditors observed that one of the strip charts appeared to be for the previous day. It transpired that the oven for which it was recording was down for maintenance, although this was not clearly indicated anywhere (Picture 13). In addition, the short-term “filing system” for recent graphs, some as old as two weeks, was under the desk blotter on the shift supervisor’s desk. Older graphs were filed in a drawer of the desk.

Mr. Kinsey pointed out these shortcomings in oven record keeping to Mr. Marsh. Mr. Marsh readily acknowledged these shortcomings and expressed willingness to correct them.

In the heat treatment area, OSM auditors observed a bin of nuts with no traceability paperwork. Neither Mr. Marsh nor the workers in the heat treatment area were able to identify these items, and no records were produced to explain their traceability by the end of the OSM tour approximately two hours later.

Except for the above instances, the heat treatment appeared to be organized and systematically run. The workers appeared to know their duties, and took care to insert and remove fastener components at the proper time from ovens (Picture 14). Picture 15 shows the heat treatment tracking method for various fastener lots.

Machining

In the machining area, OSM auditors observed numerous machine operators at lathes milling, threading, and tapping fasteners in various stages of completion. Mr. Marsh made a point of informing the auditors of the machine operators' numerous "in process" checks to ensure that the material was being properly made. However, upon closer examination, it appeared that many of the machine operators were relying exclusively on personally-owned calipers, which are not calibrated by Dyson. Dyson did indicate on their MFSQA that such personally-owned measurement equipment was used on the floor. On the audit, it was discovered that this was virtually the only in process measuring equipment for bolt manufacturing.

In one instance, OSM auditors found threaded rod where each piece was not marked. Identification of the group would have been obliterated by machining, because the bars were marked where thread would be cut.

With the process currently in place, there is no formal check on fasteners as they are machined, except by the production personnel. Dimensional problems would not be discovered until after heat treatment. However, Mr. Marsh stated that since it had never been a problem previously, he did not regard it as an item of major concern.

Inspection

The Dyson inspection team has an office near the shop floor. The chief inspector and assistant inspector have fasteners brought to them, although they often perform shop floor inspections as well. A third inspector does not sit in the office; he walks on the shop floor, randomly checking various processes. It was not clear where this individual sits, and where he prepares his reports, if any; OSM auditors did not meet this individual.

Threading "go/no-go" gauges are the most commonly-used (Picture 16). These are calibrated every year, although Dyson has an in-house one-month "grace period." This means that a six-month cycle is in reality seven months. The inspectors assured OSM auditors that the more frequently needed threading gauges are spot checked quite often, although this is not necessarily logged. However, this left open the issue of other measuring devices, such as calipers. Mr. Marsh remarked that standards do not prohibit a 30-day grace period, and that no one has ever questioned this practice before.

Calibration cycles are tracked on a spreadsheet, and printed out monthly. The printout indicated that a piece of equipment was due for calibration on June 5. This was moved to August 5 by the assistant inspector because the June 5 date was an error. Other than his own knowledge of the situation, there appeared to be no documentation to support this change.

Representative samples are drawn from production material. Dyson personnel are aware of, and have access to, ASTM F 1470 for sampling. According to Mr. Marsh and his inspectors, however, the number of samples is always provided by the client.

Standard final inspection procedure is to deburr, wash, sample, and inspect fasteners. Sample testing records are maintained for each lot on a sheet filled in by hand. Either the chief inspector or her assistant enter the ASTM or other specifications required for each lot of bolts. They then inspect bolts for dimensions and threading either on the shop floor or in their office. When they are in their office, the samples are apparently pulled and brought in by production personnel.

Mr. Marsh also demonstrated the optical comparator (Picture 17) and standard Brinnell hardness machine, as well as magnetic particle testing (MT) equipment (Picture 18). Although no one is qualified to ASNT standards for MT, Mr. Marsh indicated that he believes that Dyson personnel have sufficient knowledge of the procedures to satisfy Dyson and customers that the elbows of bent rods are acceptable.

Dyson has a standard Skidmore rocap testing machine (Picture 19). As previously discussed, Dyson intends to buy an automated, computerized rocap machine (brochure, enclosure). Dyson intends to perform all rocaps for SAS project A 325 galvanized bolts in-house.

Mr. Marsh also stated that any testing that his personnel are not qualified to perform for the record are sent to local laboratories. Turnaround is reportedly two to three days in most cases.

Nut Lubrication
In the nut lubrication area, OSM auditors viewed baths and baskets of nuts (Picture 20a). The baths consist of what Dyson describes as standard nut lubrication base fluid (Picture 20b) and admixtures. The fluid is periodically and automatically agitated.

Dyson Company is one of the few nut manufacturers who are able to lubricate just the inside face and threads of a nut. OSM auditors were shown the machine.

Shipping
OSM auditors reviewed shipping methods and procedures. Material was stacked in an orderly fashion, and appeared to have necessary accompanying paperwork (Picture 21).

Related Observation
Of note, OSM auditors visited three testing laboratories and three galvanizing facilities associated with Dyson during the trip that began at Dyson. Most of the facilities reported limited contact with Dyson, and Dyson had not actually audited any of these facilities. Mechanical Galv-Plating (MGP), submitted as a potential mechanical galvanizer, reported that Dyson had essentially severed their business relationship for upwards of a year, apparently due to cost decisions on Dyson's part, before asking MGP to fill out an MFSQA. MGP reports that during their extended association with Dyson, no one from the bolt manufacturer has visited their facility.

Information and requirements specific to the contract were not relayed to subcontractors by Dyson. Dyson answered "No" to Section M, item 10, "Did the manufacturer verify that all the

Secondary Processors have detailed QC plans and that they are certified to the QS 9000 standard?" Dyson's response implies that the only shortfall expected is in the area of QS 9000.

Dyson stated that suppliers are "well experienced and well-qualified" and that Caltrans visits and audits at "selected suppliers" have assured Dyson that "[Dyson is] capable of qualifying only those suppliers who can satisfy our and Caltrans quality expectations." Of the six Dyson subcontractors visited to date, only two received an unqualified passing grade: Tensile Testing Laboratories, and Mechanical Galv-Plating, which, as mentioned, has had no business contact with the latter for more than a year.

Dyson answered also responded "Yes" to Section M, item 11, "Have all the Secondary Processors (including zinc coating processors and heat treaters) been audited by the fastener manufacturer to verify compliance with Quality Control requirements?" The OSM audit of these facilities showed that this was not the case. Few of these facilities had the necessary Contract Documents (Standard Specifications and Special Provisions) and none were conversant with the requirements.

Two of the six Dyson subcontractors, North American Galvanizing (a major supplier), and Central Testing Laboratory have failed their audits for significant quality shortfalls. North American for material traceability, Central Testing for inadequate QC controls. Two others have received only a Contingent Pass: The Art Galvanizing for deficient QC, and Dyson's NDT laboratory, Stork-Herron, for significant NDT program shortfalls. This means that only two of six Dyson-submitted facilities satisfied contract requirements.

Exit Briefing
Several items were discussed with Dyson as items of concern that would be specifically mentioned in the audit report. MFSQA sections:
N, item 1. Receiving inspection is not adequate for reasons noted above.
N, item 6. Unidentified material in the storage yard requires guesswork as to origin and provenance; this must be corrected.
N, item 7. Material is in contact with the ground in the storage yard.
D, item 3. Written procedures are not put into practice.
Q, item 3. Strip charts are not well-organized and stored, and dates are inconsistent.
R, item 3. Calibration procedures are not consistent with industry standards, particularly with the 30-day "grace period."

In addition, during this time Dyson informed OSM and ABF that Technical Stamping will be the supplier for hardened F 436 washers. OSM indicated that Dyson should expect this facility to be audited.

FINDINGS

Dyson has not audited their subcontractors; in fact, Dyson's contact was arm's length. At least one facility reported no formal business association with Dyson for more than a year prior to the SAS project.

OBSERVATIONS

- Traceability is not completely reliable. Instances of material with questionable or no traceability were found both in the stock yard and on the shop floor.
- The receiving inspection is more check-in than inspection, and the receiving inspector is not well-versed in traceability. The receiving inspector indicated that in his four months in that position, he had never rejected any material because "it all complies."
- Material storage and handling shortfalls include: rod material without marking or documentation, rods twisted in storage piles, and substantial bending/bowing of material during storage and handling.
- Temperature record graphs for heat treating ovens are not consistently maintained.
- Machine operators rely almost exclusively on personal measuring equipment that is not calibrated or audited by Dyson.
- Dyson testing equipment is formally calibrated once per year, albeit with a 30-day "grace period," both of which (particularly the grace period) OSM finds questionable.
- Determination of production success in attaining necessary specifications is deferred until after heat treatment; in some cases, absence of negative customer feedback about product dimensional quality was cited as justification.
- Mr. Marsh, the Dyson Quality Assurance Manager, indicated that he is a part-owner of the Dyson Company.

RECOMMENDATIONS

- High-strength fasteners (A 325 and A 490) should be made fresh, not out of stored material, to ensure soundness. The "semi-finished" material was stored outdoors and was observed by OSM auditors to be, in many instances, heavily corroded.
- Require approval, in the form of a submittal, for the automated rotational capacity testing machine that Dyson intends to procure for this project.
- Dyson should ensure that all Dyson suppliers have necessary SAS documents and that they are conversant with requirements set forth by the contract.
- Dyson should have contingency plans for ensuring that product is supplied in a timely fashion should Dyson rely on galvanizers' certificates of compliance, if the galvanizing falls short of requirements.

ACTION ITEMS NOT OTHERWISE MENTIONED

- ABF should provide Dyson with Standard Specifications, Conformed Special Provisions, and (at ABF's discretion) contract drawings.

- Dyson should submit an MFSQA for Technical Stamping, Chesterfield Township, MI, the F 436 washer supplier, to ABF. OSM will schedule an audit when this MFSQA has been reviewed and accepted.

CONCLUSION

In the event that Dyson Company is considered for high-volume production of A 325 and A 490 bolts, Dyson's capacity for producing high-strength bolts should be closely reviewed in relation to that of larger manufacturers. Non-automated production methods in some areas may limit Dyson volume capabilities.

OSM recommends that the Dyson Company should be considered a **Contingent Pass.** The following issues need to be addressed to receive a passing grade:

- Traceability;
- Receiving procedures;
- Material storage and handling deficiencies;
- Calibration and improvement of record-keeping for calibrated instruments and process documents;
- Demonstration of proper tracking and auditing of requirements for subcontractors in accordance with Section M of the MFSQA.

Venkatesh S. Iyer, Ph.D., P.E.
Structural Materials Representative
Division of Engineering Services
Materials, Engineering and Testing Services
Office of Structural Materials

Document Number CAL 00

ILLUSTRATIONS (Pictures 1-21)

Picture 1. Unique, randomly-generated Dyson three-letter codes identify jobs; a numerical suffix as shown indicates a job consisting of more than one bin.

Picture 2. The Dyson Company storage yard has several aisles. Stock consists mainly of rods of various lengths and thicknesses, along with ingots for forging.

Picture 3. Numerous pieces of raw material were found on the ground in the Dyson Company storage yard.

Picture 4. Customer material tags provide information for receiving.

Picture 5. Dyson material tags are attached to stock material awaiting disposition. No 3-letter order identifier is assigned until material is associated with an order.

Picture 6. Closeup of the Dyson Storage Yard shows twisted (a) and bent (b) rod stock.

Picture 7. Randomly-selected material was chosen for record verification.

Picture 8. Dyson Company forging ovens are in the main facility.

Picture 9a. One of Dyson's specialties is large forged nuts.

Picture 9b. Closeup of a large forged nut shows the unique three-letter job identifier and The Dyson marking. Heat numbers are added after heat treatment.

Picture 10a. A worker produces A 325 high-strength bolts at Dyson Company. Note the shaft heating oven (circled). After the shaft reaches the necessary temperature, the worker manually holds each shaft in a press, where a hex head is attached to the shaft.

Picture 10b. A 325 bolts with heads attached await milling and threading.

Picture 11a. "Semi-finished" material that is stored outdoors at Dyson Company.

Picture 11b. A close-up view of 11a, showing heavy corrosion (circled).

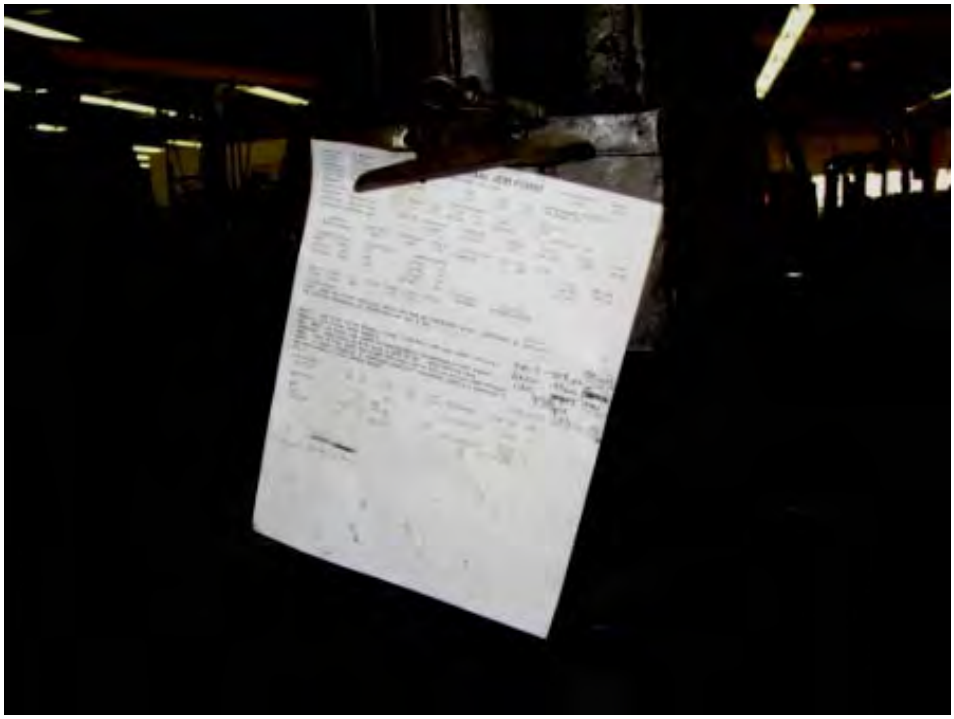

Picture 12. A tracking chart in the Dyson Company heat treating area shows various production operations.

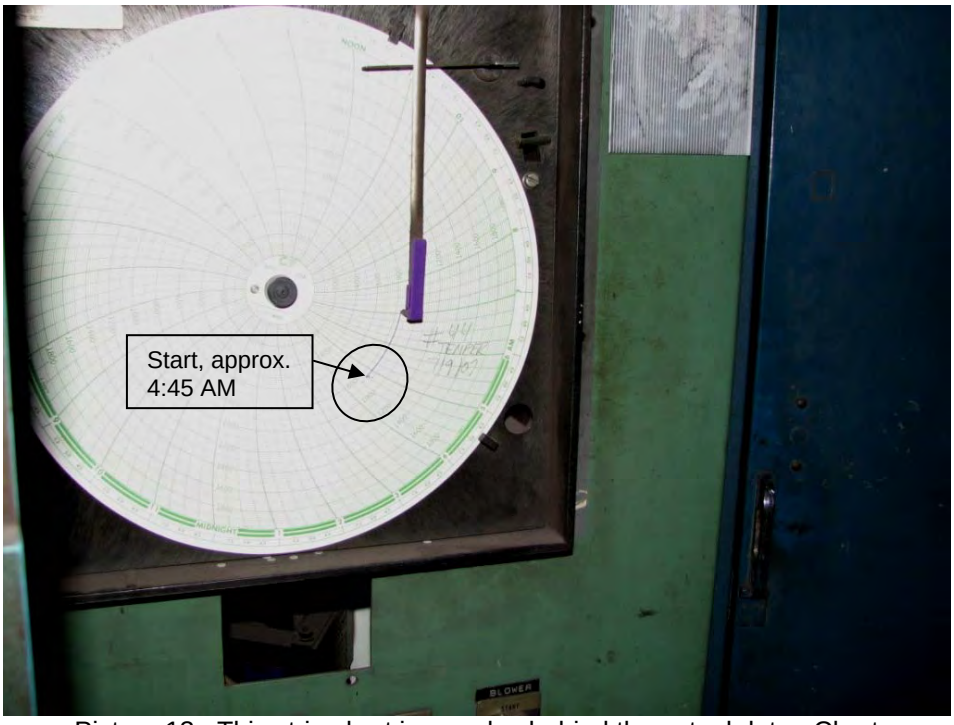

Picture 13. This strip chart is one day behind the actual date. Chart recording was stopped because the oven it monitored was shut down for maintenance, which is not clearly indicated. Recording for 7/9/07 starts at approximately 4:45 AM on 7/9/07(circled), not at midnight.

Picture 14. Dyson Company heat treating ovens operate on three shifts.

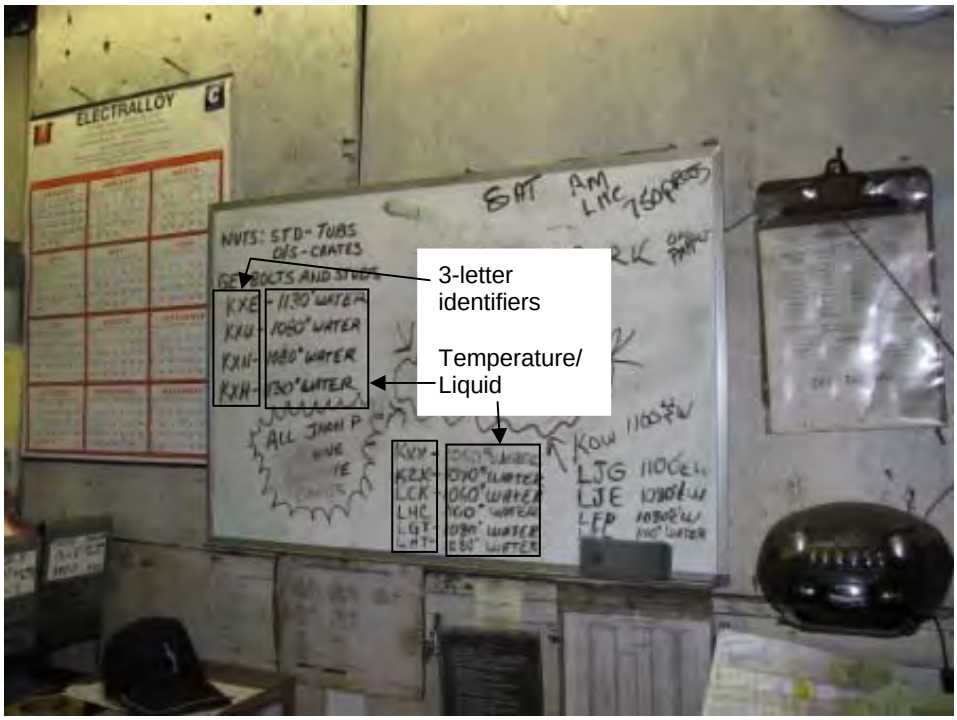

Picture 15. Dyson Company heat treatment tracking board shows 3-letter job codes and temperatures/liquids for heat treatment.

Picture 16. Dyson Company “go/no-go” gauges hang in the inspection office.

Picture 17. The Dyson Company optical comparometer displays bolt profiles for measurement.

Picture 18. Dyson Company wet magnetic particle testing (MT) equipment, including black light, is primarily to spot-check bent-rod elbows for cracks.

Picture 19. The Dyson Company Skidmore rocap testing machine may soon be replaced by a computerized, automated version.

Picture 20a. The Dyson Company lubricates most nuts by dipping them into a bath.

Picture 20b. Dyson's lubricant bath consists of an industry standard base fluid produced by Castrol, combined with admixtures.

Picture 21. Labels and packing lists appear on boxes in the Dyson Company shipping area.

July 23, 2007

PROJECT INFORMATION

04-0120F4
Self Anchored Suspension Bridge

SUBJECT

Office of Structural Materials (OSM) Audit of Art Galvanizing Works.

OVERVIEW

Art Galvanizing Works, in Cleveland, Ohio, a subcontractor for the Dyson Company, successfully completed the Material Fabrication Self-Qualification Audit (MFSQA) on June 12, 2007, per Special Provisions section 8-4.01.

The Department audited Art Galvanizing Works facilities on July 11, 2007. Present during the audit were representatives of OSM: Mr. John Kinsey, CALTRANS Senior Level III, and Mr. Markian Petrina, Structural Materials Representative; and representatives of American Bridge/Fluor, a Joint Venture (ABF): Mr. Dan Radu, ABF Steel Fabrication Manager and Mr. Charles Kanipicki, P.E., ABF Quality Control Manager. Representing the fabricator was Ms. Adrienne Klein, Vice President of Art Galvanizing Works.

DISCUSSION

The audit opened with opening remarks by Mr. Kinsey, who explained the function of OSM and the purpose of the audit. Ms. Klein then gave a brief history of the company.

Art Galvanizing Works (Picture 1) is a small family-owned company that performs hot-dip galvanizing. Art has been active in the Cleveland area for over 50 years; many employees have over 20 years of service with the company, and the night foreman has been with Art for 51 years. Ms. Klein, the Vice President, acts as both the production manager and the quality control (QC) manager, and is also the daughter of the owner.

Art's main work is small items for the electrical and fastening industries, as well as freight trailer latches. Structural galvanizing is limited to 15 feet in length due to kettle length, although Ms. Klein indicated that double-dipping is possible. Dyson apparently intends to send A 325M bolts and shorter rods to this facility.

There is no QC department as such; according to Ms. Klein, all production employees are trained to inspect galvanizing. Ms. Klein stated that galvanized material is randomly tested.

Ms. Klein indicated that products with excessive galvanizing are stripped and re-coated. Mr. Kinsey pointed out that the SAS contract prohibits this; Ms. Klein replied that in the case of overcoating, new components would have to be dipped.

Art has the ability to centrifuge components up to 3 feet long; anything longer than 3 feet is brushed with a natural-bristle brush while the galvanizing is hot, then allowed to air-dry. For galvanizing A 354 BD rods, Art does not have blasting capability. Any material for blasting must be sent to another facility, and Ms. Klein was apprised of the strict time limits and inspection criteria for such blast-and-dip operations.

OSM auditors were told that no standard written procedure exists for galvanizing. In general, a 2 to 5 minute galvanizing bath is usually considered sufficient, and according to Ms. Klein is often a matter of instinct on the part of the operators. In the event of large lots with stringent requirements, Art may perform trial coatings with small numbers of product to perfect procedures.

Ms. Klein discussed some of her QC procedures. She indicated that she calibrates the galvanizing thickness gage once per day, but that this is not recorded. She also showed auditors "Hold" slips for material that required additional attention or had unsatisfactory coating.

The auditors took a tour of The Art facilities. Auditors were asked to get permission to take pictures, as Ms. Klein stated that she was protecting trade secrets, in particular the centrifuging process. The following areas were seen:

- Shipping/Receiving
- Galvanizing
- Shipping Storage Area

Receiving

Inbound material appeared to be reasonably well segregated and traceability appeared adequate.

Galvanizing (Pictures 2-4)

OSM auditors viewed the galvanizing process, contained in a single bay at the rear of the Art facility. The acid bath (Picture 2) and buckets for hot-dip galvanizing (Picture 3) were in close proximity to each other and the molten zinc bath.

Although it had been indicated that galvanizing operators followed approximate time guidelines for duration in the galvanizing bath, no clock was visible from the hot-dipping station (Picture 4). When questioned about this, Ms. Klein stated that timing was a matter of adding additional baskets.

Apparently, the rationale is that another basket or two requires additional handling time, which causes an increase in the amount of time that each basket spends submerged in the zinc bath. However, Ms. Klein was not forthcoming when it was asked how galvanizing operators judge the actual time.

The hot-dipping process was observed for several baskets of components. The procedure appears to function purely by "seat of the pants" judgment by galvanizing operators, who follow the "first in, first out" method when dipping multiple buckets into the zinc bath. Following water quenching, components are placed in a bin. While OSM auditors were present, it appeared that components, which were cylinders with rounded ends weighing several pounds each, were dumped into the bins without any particular care being taken to prevent damage to the zinc coating.

Mr. Kinsey asked Ms. Klein about the thickness readings for components that had completed the galvanizing process. Ms. Klein went into the production office behind the hot-dip station and retrieved the thickness meter. She found numerous instances of inadequate thickness. Until Mr. Kinsey's inquiry, none of the production personnel were observed measuring thickness.

When galvanizing was completed on a second batch of components from the same lot, they were found to have adequate coating thickness. However, before these newly-dipped, acceptable components were even measured, they were placed in the same bin as the insufficiently-coated components.

There was no move by Ms. Klein or production personnel to segregate the non-conforming material. No "Hold" tag was placed in the bin containing the parts with insufficient galvanizing thickness.

Shipping Area

Outbound material was clearly identified and tagged. However, QC control for material suitability appears virtually nonexistent.

Components similar to those recently viewed in the galvanizing area were found in the bin marked "OK to ship." Mr. Kinsey inquired about the coating thickness; Ms. Klein indicated that these had not yet been tested for coating thickness, and stated that she had to return to the production area to retrieve her coating thickness gauge.

After an unexpectedly long absence, Ms. Klein returned and measured the components. The thickness readings were approximately 3 times higher than for those recently observed on the galvanizing line. Ms. Klein explained that there was no maximum limit for these components.

There did not appear to be any procedure in place for visual inspection or repair of non-compliant coatings. It was noted that several pieces marked as ready to ship had minor

blemishes that should have been corrected. No holding area for nonconforming material was observed, contrary to what was expected from previous Art representations.

Outbrief
Mr. Kinsey indicated to Ms. Klein that although Art Galvanizing Works appears capable of performing the hot-dip zinc coating as required, the apparent absence of QC would be noted on the audit. The fact that production schedule overrode quality control principles was a major shortfall, namely that low-coating thickness items were not segregated from acceptable items because Ms. Klein told auditors that the material needed to be kept moving for schedule purposes. It was also noted that uninspected material had been marked "OK to ship."

In order for Art to be recommended for acceptance, Mr. Kinsey indicated that third-party QC would have to oversee operations and inspections. Ms. Klein indicated that she was accustomed to third-party inspections through experience with the Pennsylvania and New York Departments of Transportation.

FINDING
Art Galvanizing Works does not have necessary quality control. The company's Vice President, who is the owner's daughter, primarily oversees production but is also the sole quality inspector; auditors observed an instance when production overrode quality control.

OBSERVATIONS
- The Dyson Company appears not to have provided guidance and auditing as required by contract documents.
- Art Galvanizing was not familiar with contract requirements prohibiting stripping and re-dipping.
- Art Galvanizing has no blasting facilities for ASTM A 354 BD components and appears to have limited resources to properly evaluate blast finish prior to galvanizing.
- Despite assurances that all personnel are trained in quality and measure galvanizing thickness, only the Vice President was observed measuring thickness of galvanized material and the only apparent gage was maintained in an office.
- Newly-galvanized components weighing several pounds each were dumped into a bin without apparent concern for protecting zinc coating.
- Material with acceptable galvanizing thickness was placed in the same container as material with known insufficient galvanizing thickness.
- OSM auditors were told that production schedule can override QC concerns, here in the context of not segregating compliant from non-compliant materials of different hot-dip batches from the same lot.
- Material that the Vice President indicated had not yet been inspected was marked "OK to ship" and apparently awaiting pickup by the customer.

CONCLUSION

OSM recommends that Art Galvanizing Works should be considered a **Contingent Pass.** To receive a passing grade, Dyson Company and Art must ensure that independent third-party quality control for processing, handling, and coating measurement, is in place for all galvanizing performed for the SAS project.

Art Galvanizing Works appears capable of performing small-volume galvanizing of fasteners and small rods to an acceptable level of quality, provided the above controls are instituted.

Venkatesh S. Iyer, Ph.D., P.E.
Structural Materials Representative
Division of Engineering Services
Materials, Engineering and Testing Services
Office of Structural Materials

ILLUSTRATIONS (Pictures 1-4)

Picture 1. Art Galvanizing Works, the Dyson Company's primary small-component galvanizer, is located in Cleveland, Ohio.

Picture 2. The acid pickling bath at Art Galvanizing Works can accommodate components up to 15 feet long.

Picture 3. Components are usually small, and hot-dipped in the buckets shown, up to 3 buckets at once.

Picture 4. Hot dip galvanizing at Art Galvanizing Works is nominally time-controlled, but no clock is visible from the galvanizing line.

July 23, 2007

PROJECT INFORMATION

04-0120F4
Self Anchored Suspension Bridge

SUBJECT

OSM Department Audit of Tensile Testing Metallurgical Laboratory (TTML) facilities based on the Manufacturing and Fabrication Self Qualification Audit (MFSQA) dated May 18, 2007.

OVERVIEW

Tensile Testing Metallurgical Laboratory (TTML), in Cleveland, Ohio, a subcontractor for the Dyson Corporation, successfully completed the Material Fabrication Self-Qualification Audit (MFSQA) on May 18, 2007, per Special Provisions section 8-4.01. The Office of Structural Materials (OSM) performed a department audit at TTML facilities in Cleveland, Ohio, on July 11, 2007. The audit team included Mr. John Kinsey and Mr. Markian Petrina.

On July 11, 2007, the audit team visited the TTML facility and met with Mr. Jeffry Smith of the TTML management team. Mr. Dan Radu, Steel Fabrication Manager and Mr. Charles Kanipicki, P.E., Quality Control Manager from American Bridge/Fluor, a Joint Venture (ABF) were present during the audit as well.

The overall scope of work to be provided by TTML facilities was discussed. TTML will perform destructive mechanical testing for Dyson Corporation.

AUDIT SUMMARY

The main objective of the department audit was to evaluate the overall capability of TTML to test fasteners and fastener steel for the Self-Anchored Suspension (SAS) Bridge, and to verify the accuracy of the responses to the MFSQA. TTML's understanding of the contract documents was also discussed.

Discussions of MFSQA

All sections of the completed MFSQA were reviewed with TTML during the audit, and TTML was given the opportunity to expand on their written responses. Only those sections of significant concern are discussed below.

Additional details were requested concerning traceability of materials. During an extensive brief presented by Mr. Smith, OSM auditors saw a detailed description of receiving and traceability. TTML policy is to inspect samples thoroughly when they have been received, and to match them

to accompanying documentation. If discrepancies are noted, samples are placed on hold until the discrepancies are resolved. Once released for testing, a computer-generated number along with Julian date and sample number (001 to 999) for a particular date is assigned. This number remains with the sample and work order.

TTML has trained on ASTM F 1470, and the specification is available to those who require it. However, almost all sample sizes are determined by customers, who send TTML the desired number of samples to be tested.

TTML has no need to verify subcontractor suitability for this contract, because TTML will perform all Dyson work in-house. TTML subcontracts nondestructive testing (NDT), but does not expect to be responsible for NDT. In any event, TTML uses the same NDT laboratory as Dyson, Stork-Herron, which is detailed in a separate report.

Observations during Facility Tour

Mr. Smith led the tour through the TTML facility (Photographs 1 and 2). At the receiving area, OSM auditors observed clearly-marked materials (Photograph 3) with appropriate documentation. Photograph 4 shows the holding area for samples that have been entered into the traceability system and are awaiting preparation (machining, heat treatment, etc.) and testing. Mr. Smith stated that unverifiable samples are rejected and sent back.

Most samples are prepared for testing in the machine shop, Photographs 5 through 7. Mr. Smith explained the TTML policy for cutting and machining samples large enough that ensures the necessary size remains for testing after all machining.

Everywhere at TTML, samples awaiting a procedure (machining or testing) were arranged in an orderly fashion that minimized the chances for confusion (Photograph 8). All samples were marked with paint or some form of engraving should they become separated from their paperwork.

Some samples are heated in calibrated ovens (Photograph 9) in preparation for testing. One calibration sticker (Photograph 10) was observed to be blank or the markings leached off, which was brought to Mr. Smith's attention.

In the actual testing areas, orderly arrangement of samples continues, as in the machine shop (Photograph 11). Tensile testing is performed on one of several computerized machines (Photograph 12) or one of many mechanical machines (Photograph 13). Calibration stickers were seen on all tensile testing equipment, and appeared to be calibrated within six months (Photograph 14). Hardness testing machinery (Photograph 15) is also available in adequate numbers.

When tests are completed, the test forms are reviewed (Photograph 16) for accuracy. Results are sent to clients, and a copy is filed (Photograph 17) in an easily-accessible area.

SUMMARY OF FINDINGS

Overall, the audit team generally found TTML facilities capable of testing fastener components and base steel as required by the contract. TTML's ongoing experience working for Dyson on fastener testing and wide-ranging experience in fasteners makes it apparent that they are capable of performing the work required.

In summary, the facility was able to demonstrate their capabilities are satisfactory to the contract requirements for performing this portion of the work. No Department Items of Concern (IOC) were noted for this facility.

CONCLUSION

Based on the Office of Structural Materials Department audit of TTML facilities, OSM recommends Tensile Testing Metallurgical Laboratory be approved as a facility capable of performing the work and should receive a pass audit.

If you have any questions, please call Venkatesh Iyer, Structure Materials Representative at (858) 967-6363, or Keith Hoffman at (510) 450-7765.

Venkatesh S. Iyer, Ph.D., P.E.
Structural Materials Representative
Division of Engineering Services
Materials, Engineering and Testing Services
Office of Structural Materials

Document Number CAL 00

APPENDIX

Photograph 1. View of TTML shop floor shows part of the machine shop ; receiving area is below and to the right.

Photograph 2. Back records are kept in a secure area at TTML.

Photograph 3. Clearly-marked samples with documentation
await disposition in the receiving area of TTML.

Photograph 4. Incoming samples have received work orders, traceability
numbers, and are staged to await machining and testing.

Photograph 5. The machine shop is neat and orderly, and is an important starting point for preparation of many test samples at TTML.

Photograph 6. Band saws in the machining area prepare samples for testing.

Photograph 7. Milling machine at TTML finishes sample preparation.

Photograph 8. Small samples have been cut and await milling at TTML.

Photograph 9. When required, samples are heat-treated in calibrated ovens

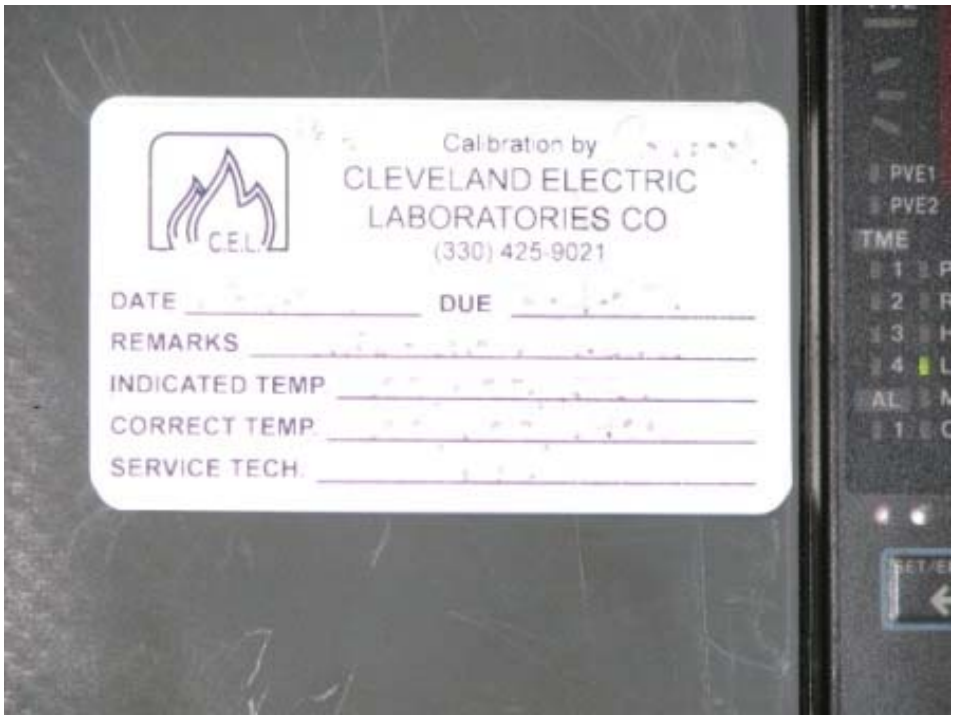

Photograph 10. Oven calibration sticker was observed with non-visible data.

Photograph 11. Machined samples await tensile testing on the TTML computerized tensile testing machine.

Photograph 12. The computerized tensile testing machine destructively tests a machined sample at TTML.

Photograph 13. Tinius-Olsen mechanical (non-computerized) tensile testing machine at TTML. Most of TTML's machines are of this type.

Photograph 14. Printer for mechanical tensile testing machine at TTML shows a current calibration sticker.

Photograph 15. Hardness testing machine awaits a sample at TTML.

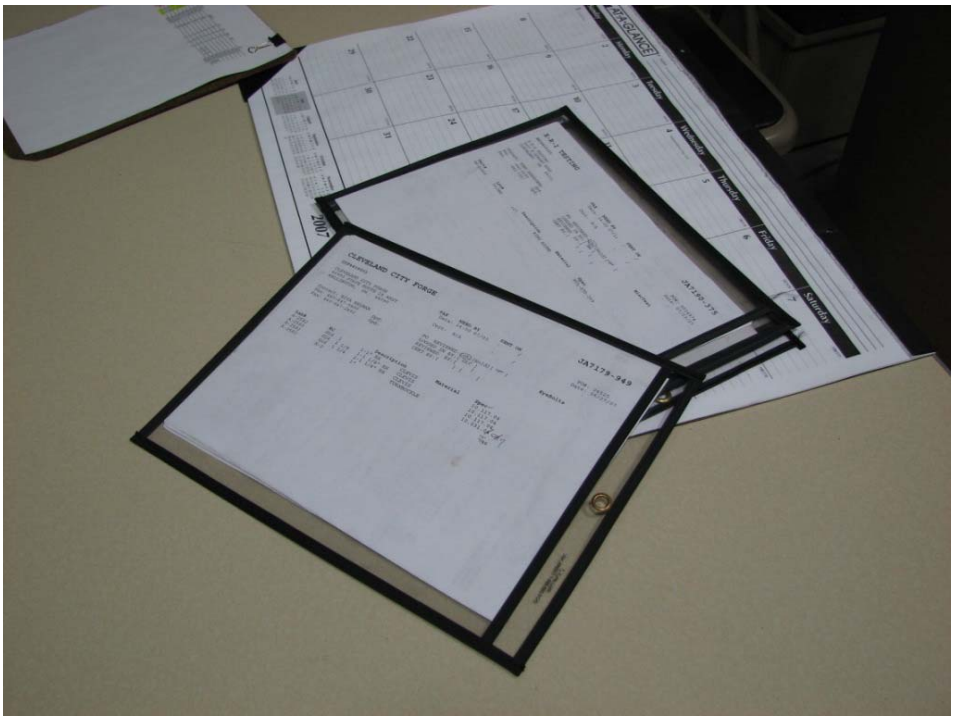

Photograph 16. Test result forms at TTML show traceability in the upper right hand corner: a unique identifier generated at receiving, Julian date, and job number for that date.

Photograph 17. TTML keeps testing records easily accessible and available for extended periods.

February 12, 2008

PROJECT INFORMATION

04-0120F4 - SFOBB Self Anchored Suspension (SAS) Bridge

SUBJECT

Department Audit of the TC Industries (TCI) Inc., Crystal Lake, IL, a heat treating subcontractor to The Dyson Corporation, who will provide special bolts, nuts, anchor rods and anchor bolts for bid items 45, 50, 52, 54, 56, 57, 60, 61, 66, 82 and 85.

OVERVIEW

The Dyson Corporation intends to manufacture long (more than 9 m) anchor rods for PWS cable system. For these long anchor rods, they would not be able to perform heat treatment within their facility. Therefore, they intend to use TCI as a sub to perform the heat treatment. TCI successfully completed the Manufacturing and Fabrication Self Qualification Audit (MFSQA) per Special Provisions, Section 8-4.01. The ABF-SUB-000183 was approved on July 09, 2007. Office of Structural Materials (OSM) scheduled a department audit of TCI facility in Crystal Lake, IL on January 25, 2008. The audit team included Mr. Ryan Smith P.E. and Mr. Jinesh Mehta P.E.

On the day of the audit, the audit team visited the TCI facility and met with Mr. Bill Weber (Division Manager, TCI), Mr. Pat Pipitone (Sales Manager, TCI), and Mr. Joshua Robach (6 Sigma Black Belt, TCI). Also in attendance from American Bridge/Fluor (ABF), was Mr. Charles Kanapicki (ABF Quality Control Manager (QCM)). It was noted that even though TCI was presented as a sub to Dyson, there was no representation from Dyson at the time of audit.

The overall scope of work was discussed and it was indicated that for this project, scope of TCI is limited to performing batch heat treatment for large anchor rods conforming to the relevant ASTM standards. They would perform testing to confirm hardness of material; however final testing and certification of anchor rods will be performed by Dyson. TCI Inc. has several other capabilities for variety of thermal processing, however with the limited scope, audit was limited to batch heat treatment for large anchor rods.

The audit began with a brief introduction of TCI history, experience and capacity. First established 1881, TCI is involved in several different segments of material processing. TCI's mill product division is performing commercial heat treatment for over 40 years. TCI is an ISO 9001 certified company and also possess A2LA certification for their lab. It was noted that they can perform heat treatment for up to 45' (13.5 m) long components. Thus, TCI is a leading commercial heat treater for large components.

Following the introduction, audit team provided brief information regarding uniqueness and high expectations associated with the SAS project and also briefly explained

Caltrans' process for Quality Assurance. This discussion was followed by a tour of the TCI facility, which was followed by a review of their responses to the MFSQA. An exit meeting was held during the afternoon to discuss the team's audit findings.

AUDIT SUMMARY

The main objective of the Department audit was to evaluate the overall capability of TCI to perform quality heat treating for large anchor rods for bid items 66. Their capability of processing these unique and large structural components was evaluated using the written responses to the MFSQA. Some of the related topics that were discussed with TCI included material control and traceability, in-process verifications, understanding of the material specifications and their quality control programs. The overall objective can be broken down in following segments.

- Their overall capability to perform quality heat treatment for large anchor rods
- Understanding of applicable specifications and maintain traceability
- Quality management system to provide consistent quality

The following summarizes our discussions, comments, and observations during the department audit:

Observations during Facility Tour

Mr. Bill Weber (Division Manager), Mr. Pat Pipitone (Sales Manager), and Mr. Joshua Robach (6 Sigma Black Belt), of TCI led the tour through the facility. In the beginning audit team inquired about the photography and TCI representative showed reservations towards taking pictures of their equipment. They requested not to take pictures of any equipment within their facility. Therefore, appendix includes pictures of their entire heat treatment facility except the operational equipment.

The audit team was first led to the material receiving area (Photograph 1 to 8). It was noted that TCI had very well organized shipping and receiving area. Received material was organized by sizes. Receiving inspection was performed, which even included verification of dimensional tolerances. To maintain proper traceability, in addition to regular tag, heat number were listed with permanent marker on the metal straps on both ends of the bundle. Once the reception inspection is complete material is issued a production order (Photograph 9). Production order is not issued until the reception inspection is clear.

Next, the audit team visited the entire heat treatment process. One of the heat treatment furnaces was in operation. A typical layout of the furnace is illustrated in photograph 10. Temperature compliance of different chambers was verified and was noted within their tolerances. It was also noted that various fixed parameter were posted next to different designated area for operator's benefit (Photographs 11 & 12). Organized and smooth

operations were observed at all equipment stations. It was also noted that strip charts for multiple thermocouples were being plotted.

During the tour, it was noted that there were two different heats being entered in the batch at the same time. One heat contained three bars and the other contained two bars and all five of them were of identical sizes (Photograph 15). The heat numbers were marked with some paint at the ends; however it appeared that marking can easily diminish during the heat treating/quenching process. Additionally, review of furnace report at that time did not show any note regarding location of different heats within the batch (Photograph 16). This raised a serious concern regarding mix-up of two different heats and loss of traceability.

Next the audit team inquired about calibrations of thermocouples. They indicated that they do not calibrate the furnace thermocouples but just perform verification of all furnace thermocouples every two weeks, using master thermocouples. Thermocouples are replaced when they deviate plus or minus ten degrees. However, this procedure was not documented and review of their work order did not confirm with stated variation. It appeared that it was left to electrician's discretion regarding when to replace the thermocouples. Audit team expressed that a procedure complying with manufacturer's recommendation and corresponding ASTM, for thermocouple calibration and verification, should be developed and enforced.

Upon inquiry it was noted that during any process, when non-conformance is found a non-conformance report is generated. The sales manager contacts the customer regarding the issue and determines whether QC needs to get involved. Based on customer's need necessary testing or modifications are made and finally they are resolved by the sales manager. Thus, QC's involvement in the process was determined and controlled by the sales department. Audit team expressed concern regarding handling of non-conformances by sales instead of quality department. They indicated that majority of their non-conformances are associated with quality of raw material and therefore they are better handled by sales. They also indicated that when non-conforming material is accepted by the customer, an exception note is made on the certification documenting that deviation.

At the end, the audit team visited the QC department and testing laboratory (Photographs 17 to 20). Several hardness testing equipment were available. All the equipment had current calibration stickers (Photograph 20) along with calibration block for hardness tester (Photograph 18). When asked, who signs off on the final report, it was indicated that QC Manager signs the report. However, based on review of typical report (which was forwarded to audit team at a later date), it was noted that the inspector performing the hardness testing is signing off on final inspection report and certificate of compliance (COC). No further review of his work was conducted. This appears to be violation of laboratory accreditation guideline ISO 17025, which requires authorizing person sign off on the report. Also, it is noted that the lack of review of inspector's report might increase chances of error in final report/COC.

Discussions of MFSQA

Following the plant tour, a detailed review of all relevant sections of the MFSQA was conducted in order to discuss and give the TCI representative the opportunity to expand on their written responses. Only the sections of significant concerns are discussed below:

- Section M, questions 14 and 15 asks if the fastener components were tested by a laboratory acknowledged by Caltrans or NIST (which follows ISO/IEC guide 25)? The response marked "NA", however they do perform hardness testing and they do have current A2LA lab accreditation. Therefore, their response to MFSQA was modified to "YES" instead of "NA."
- Under Section N, Material Receiving, it was noted that TCI has a very good and thorough system for material receiving. There is a very good system of multiple identification to avoid any lose in traceability during receiving or storage. This was also verified during the plant tour (Photograph 1 to 8).
- Section N, item 6 asks "Does the manufacturer have a material identification system to assure control of materials of different heats, lots and grade?" In response they marked "YES" and stated they mark heat numbers on bundles and bars. Audit team verified that they had a very good system for stored materials. However, when inquired about assigning lot numbers after each heat treatment batch, they indicated that they do not assign separate lot number after each batch. They assign one lot number to the entire heat of material, irrespective of number of heat treatment batches. They perform testing on the entire heat instead of testing each batch that is heat treated. They indicated that their method is in compliance with corresponding ASTM. However, based on review of material specification (ASTM A 354 section 9.4), it is noted that the a lot should be defined for each batch of heat treatment and testing should be performed accordingly for each lot.
- Section R, question 2 and 6 refers to organization chart, which would reflect commitment to the quality and independence of quality control from production. In the MFSQA TCI had attached an organization chart meeting this requirement. However, this chart was for the entire firm and therefore a facility specific chart was requested for their Mill Product Division (MPD). An organization chart for MPD was submitted at a later date. Based on review of the chart it was noted that the QA manager works for VP of operations. Also, it was noted that during the tour that items like non-conformance reports and furnace thermocouple verifications were primarily handled by other departments. It appeared that QC department works as an ancillary structure and gets involved in the issues only when consulted by production or sales.

SUMMARY OF FINDINGS

Overall, the audit team generally found that TCI has a good material receiving system, lots of experience and credentials; however during heat treatment processing the process of lot identification does not comply with ASTM requirements. Overall facility has

capability to perform heat treatment on large anchor rods; however there are Items of Concerns, as noted below, should be addressed before any of the project work is performed by TCI.

Items of Concern:

Lot Identification and Traceability – TCI should define lot as batch that is heat treated as required by ASTM A 354 and perform sampling and testing in accordance with those lots instead of heat lots. Additionally, TCI should take extra precaution to make sure that when two different heats are heat treated in the same batch, permanent identifications are made to avoid any mix-up in different heats. A procedure for such scenario should be documented and enforced.

Calibration of Thermocouples: For furnace thermocouple calibration and verification, a procedure complying with manufacturer's recommendation and corresponding ASTM tolerances, should be developed and enforced.

Certificate of Compliance: Even though it was stated that QC Manager signs off the final certificate, it was noted that final Certificate of Compliance was signed off by the inspector performing the testing on the material. TCI should clarify their standard practice and make sure that test results are reviewed and signed off by authorizing personnel, as stated during the audit.

Lack of Involvement of Quality Control: It was noted that involvement of quality department lacked in various quality functions like handling of non-conformances, verification of equipment etc. This poses a concern that a problem might remain undetected due to lack of review or involvement from quality. TCI shall address the Department's concern and submit it in writing for the Department's review.

Findings:

No findings were noted during the audit.

CONCLUSION

The audit team concluded the following:

- **Heat Treatment Capability:** TCI generally demonstrated to the audit team that they have the experience, engineering support, and equipment capacity to perform quality large component batch heat treatment for anchor rods for the project.
- **Sense of Commitment to Quality:** During the visit the audit team sensed the company has a strong commitment to produce a quality product. Company showed a quality conscious attitude, and maintains various quality certifications to support their practice. However, certain practices did not comply with the corresponding specifications or standards.

- **Management Team:** TCI management team has tremendous experience in the heat treatment however needs some changes in their system to comply with corresponding standards and maintain quality standards.

RECOMMENDATION

Based on the Department audit of TCI facility, OSM recommends TCI receive a Contingent Pass, the above mentioned item of concerns should be addressed via ABF and submitted to Caltrans for review and approval.

During the closing meeting, TCI acknowledged some of these concerns and showed willingness to work on the items of concerns.

If you have any questions, please call Mazen Wahbeh, Structure Materials Representative at (818) 292-0659, or Keith Hoffman at (510) 450-7765.

Signature on file

MAZEN WAHBEH, Ph.D., P.E.
Structural Materials Representative
Division of Engineering Services
Materials, Engineering and Testing Services
Office of Structural Materials

cc: Dan Speer, Keith Hoffman

APPENDIX A – PHOTOS

Photograph 1: Well organized shipping and receiving area

Photograph 2: Well stacked bundles of materials with proper IDs

Photograph 3: Proper stacking of materials to avoid any damage

Photograph 4: Tags were well secured and identifiable for all the materials

Photograph 5: Well organized materials as per sizes

Photograph 6: Proper labeling of materials

Photograph 7: Heat numbers marked on metals straps of each bundle

Photograph 8: Materials stored inside, waiting to be processed

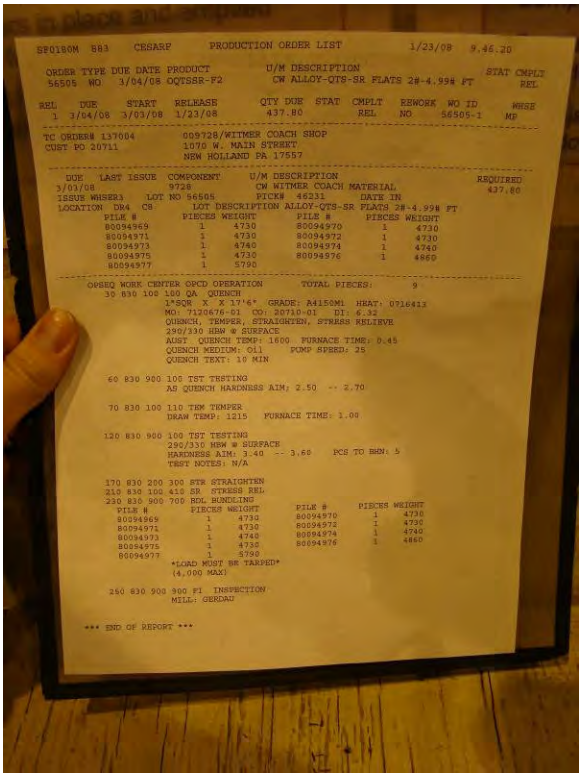

SF0180M 883 CESARF PRODUCTION ORDER LIST 1/23/08 9.46.20

ORDER	TYPE	DUE DATE	PRODUCT	U/M DESCRIPTION	STAT	CMPLT REL
56505	WO	3/04/08	OQTSSR-F2	CW ALLOY-QTS-SR FLATS 2#-4.99# FT		

REL	DUE	START	RELEASE	QTY DUE	STAT	CMPLT	REWORK	WO ID	WHSE
1	3/04/08	3/03/08	1/23/08	437.80		REL	NO	56505-1	MP

TC ORDER# 137004
CUST PO 20711

009728/WITMER COACH SHOP
1070 W. MAIN STREET
NEW HOLLAND PA 17557

DUE	LAST ISSUE	COMPONENT	U/M DESCRIPTION	REQUIRED
3/03/08		9728	CW WITMER COACH MATERIAL	437.80

ISSUE WHSE#3 LOT NO 56505 PICK# 46231 DATE IN
LOCATION DR4 C8 LOT DESCRIPTION ALLOY-QTS-SR FLATS 2#-4.99# FT

PILK #	PIECES	WEIGHT	PILK #	PIECES	WEIGHT
80094969	1	4730	80094970	1	4730
80094971	1	4730	80094972	1	4730
80094973	1	4740	80094974	1	4740
80094975	1	4730	80094976	1	4860
80094977	1	5790			

OPSEQ WORK CENTER OPCD OPERATION TOTAL PIECES: 9

30 830 100 100 QA QUENCH
1"SQR X X 17'6" GRADE: A4150M1 HEAT: 0716413
MO: 7120676-01 CO: 20710-01 DI: 6.32
QUENCH, TEMPER, STRAIGHTEN, STRESS RELIEVE
290/330 HBW @ SURFACE
AUST QUENCH TEMP: 1600 FURNACE TIME: 0.45
QUENCH MEDIUM: Oil PUMP SPEED: 25
QUENCH TEXT: 10 MIN

60 830 900 100 TST TESTING
A5 QUENCH HARDNESS AIM; 2.50 -- 2.70

70 830 100 110 TEM TEMPER
DRAW TEMP: 1215 FURNACE TIME: 1.00

120 830 900 100 TST TESTING
290/330 HBW @ SURFACE
HARDNESS AIM: 3.40 -- 3.60 PCS TO BEN: 5
TEST NOTES: N/A

170 830 200 300 STR STRAIGHTEN
210 830 100 410 SR STRESS REL
230 830 900 700 BDL BUNDLING

PILK #	PIECES	WEIGHT	PILK #	PIECES	WEIGHT
80094969	1	4732	80094970	1	4730
80094971	1	4730	80094972	1	4730
80094973	1	4740	80094974	1	4740
80094975	1	4730	80094976	1	4860
80094977	1	5790			

LOAD MUST BE TARPED
(4,000 MAX)

250 830 900 900 FI INSPECTION
MILL: GERDAU

*** END OF REPORT ***

Photograph 9: Typical production order, listing all the steps of processing

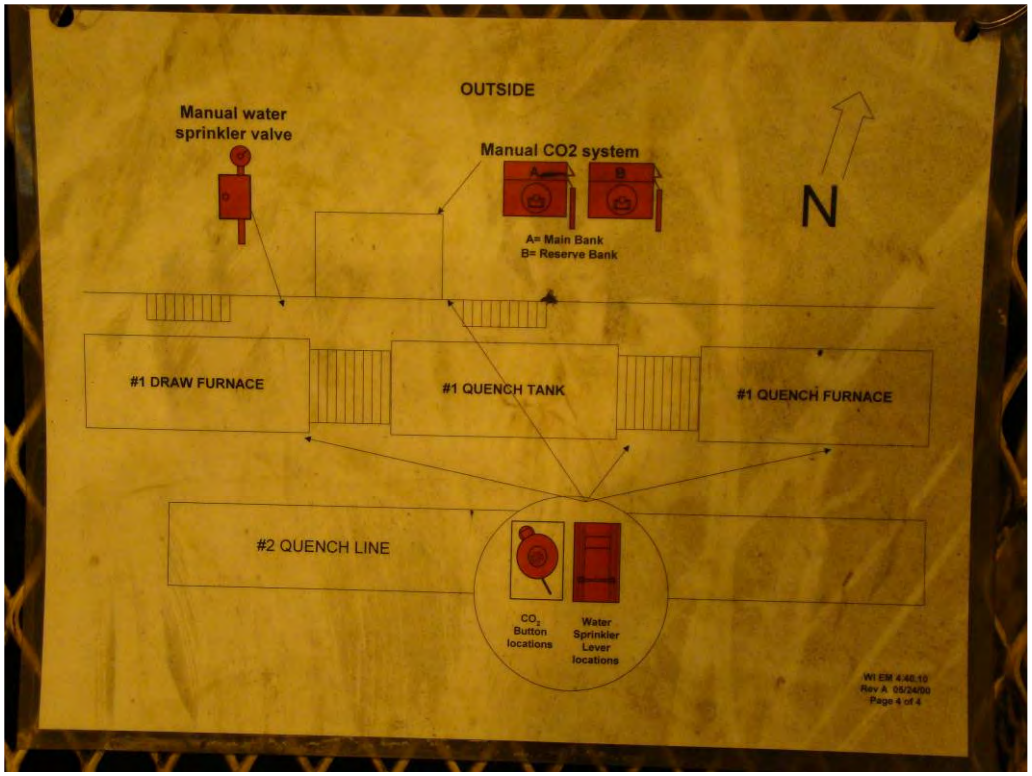

Photograph 10: Layout of a heat treatment furnace

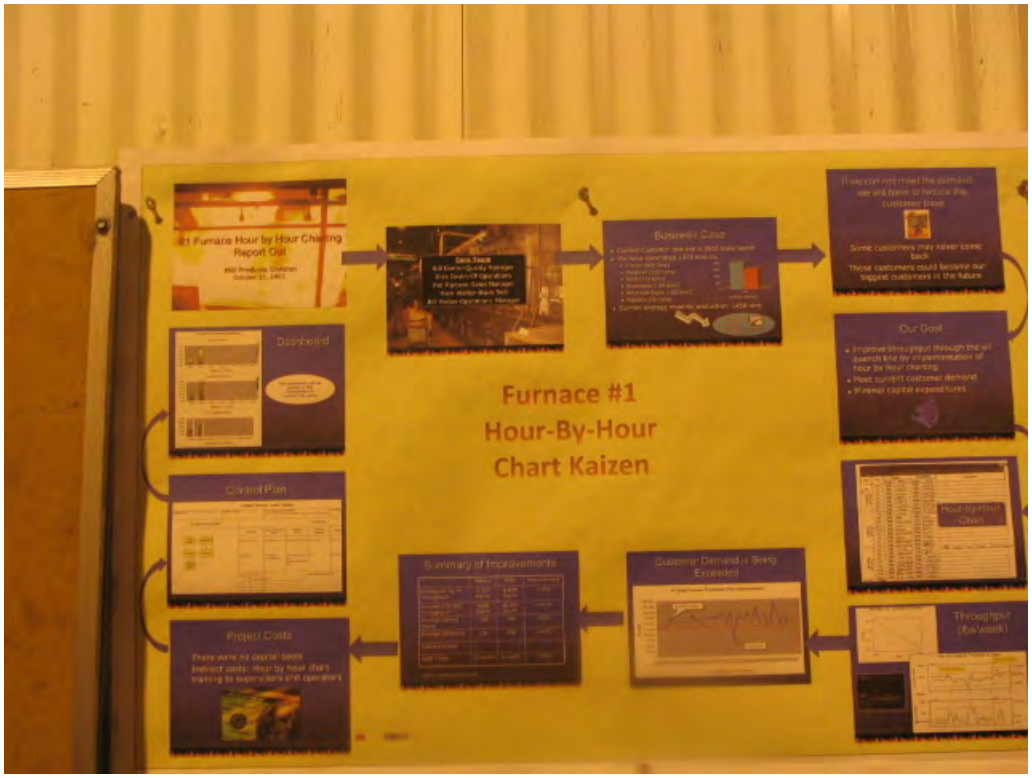

Photograph 11: Processing char for furnace no. 1

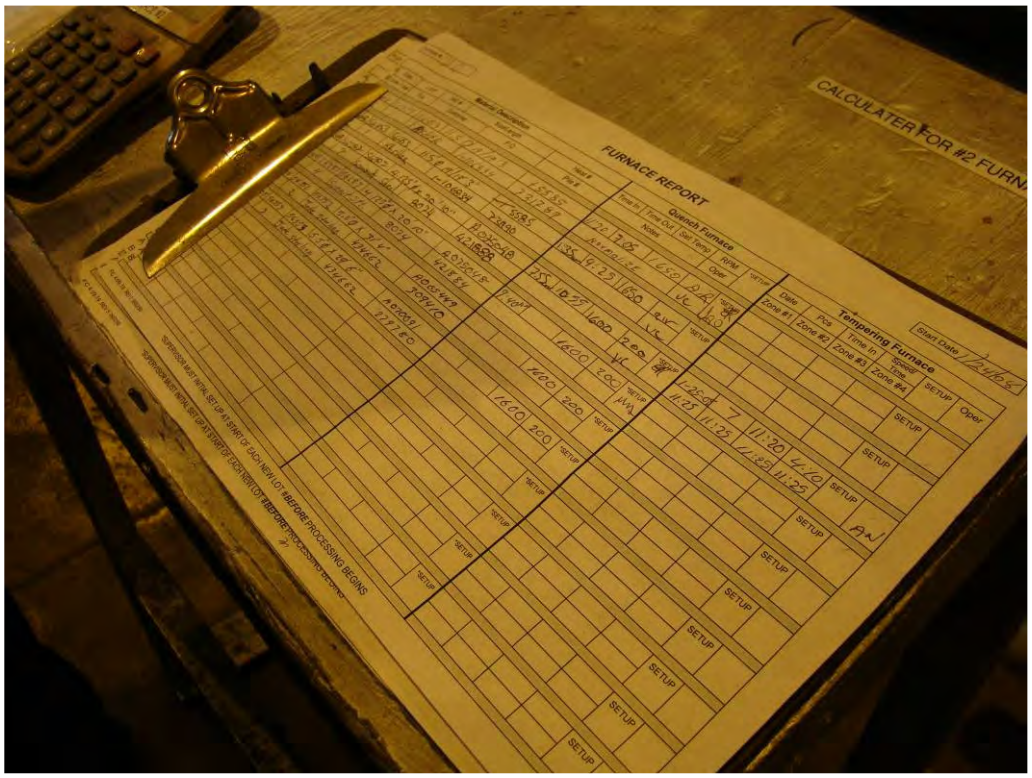

Photograph 12: Operator's furnace report, documenting various parameters

Photograph 13: Quench oil tank parameters posted

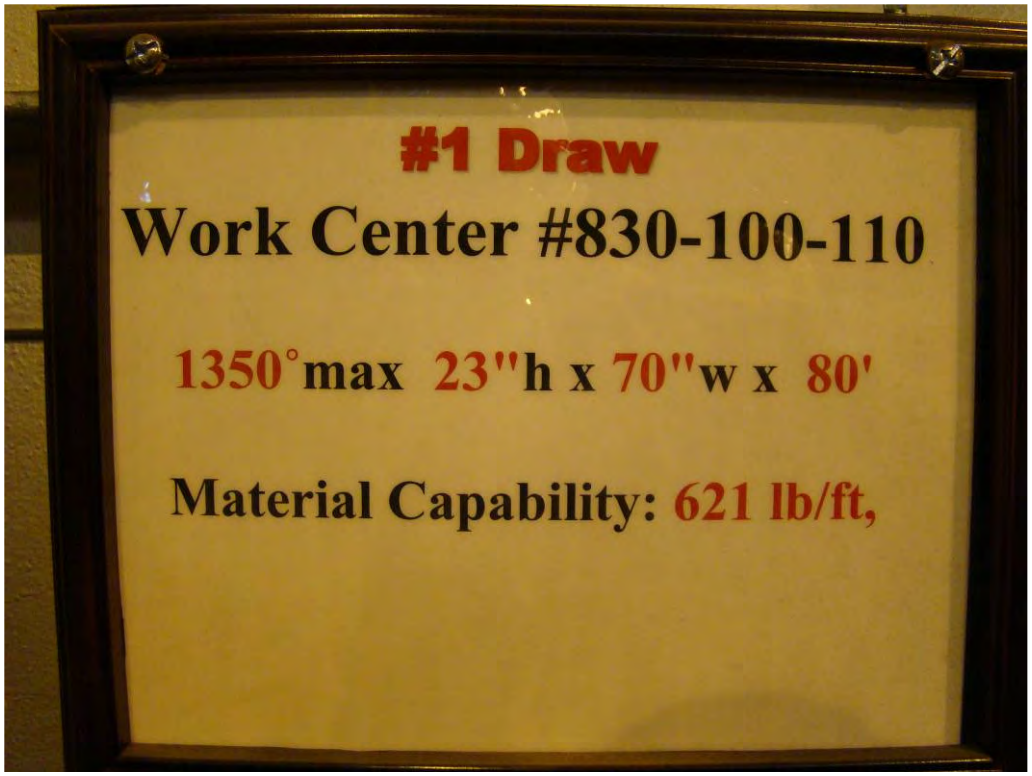

Photograph 14: Posted parameters for #1 draw

Photograph 15: Two different heats (identical sizes) being processed in single batch, without proper permanent marking

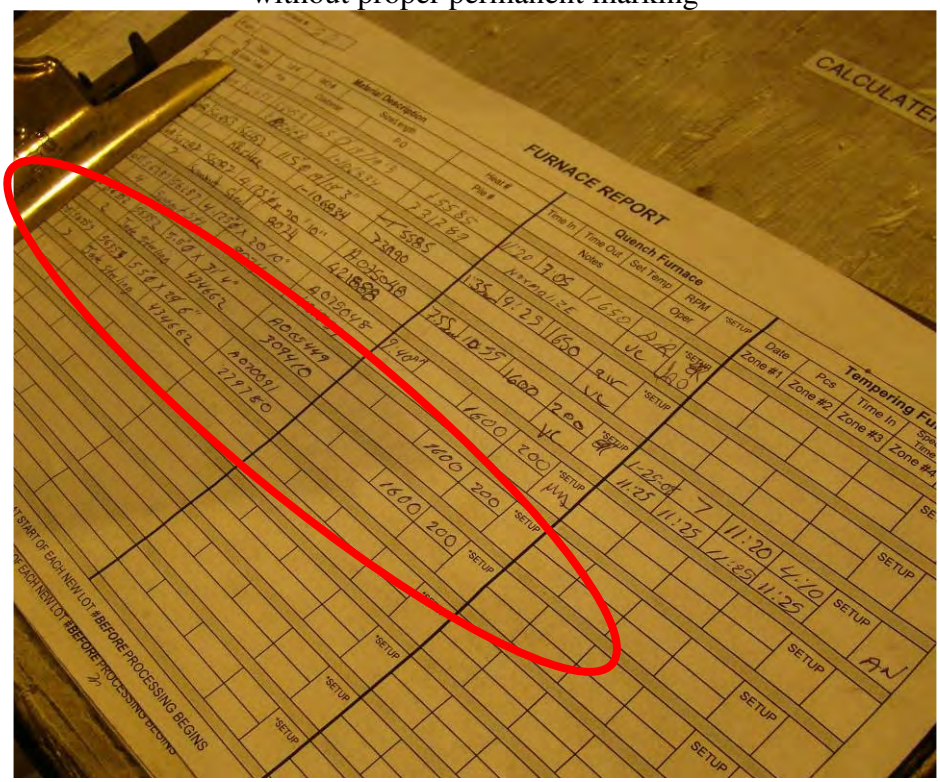

Photograph 16: Furnace report, when inquiry about above heats was made (Did not show position of two heats placed in the same batch)

Photograph 17: Digital hardness tester

Photograph 18: Standard blocks for hardness tester verification

Photograph 19: Hardness tester

Photograph 20: Calibration sticker showing current calibration

June 2, 2008

PROJECT INFORMATION

04-0120F4
Self Anchored Suspension Bridge

SUBJECT

The Office of Structural Materials (OSM) audit of Bob Monnig Industries (BMI), galvanizing facilities based on the Manufacturing and Fabrication Self Qualification Audit (MFSQA) dated April 17, 2008.

OVERVIEW

Bob Monnig Industries, in Glasgow, Missouri, a subcontractor for the Dyson Corporation, successfully completed the Material Fabrication Self-Qualification Audit (MFSQA) on April 17, 2008. The Office of Structural Materials (OSM) performed a Department audit at Bob Monnig Industries facilities in Glasgow, Missouri, on May 21, 2008. The audit also included Phoenix Industries, the on-site blasting subcontractor to Bob Monnig Industries. The OSM audit team included Structural Material Representatives (SMR) Dr. Venkatesh Iyer and Mr. Gary Thomas.

On May 21, 2008, the audit team visited the Monnig facilities and met with Mr. John Monnig, Owner and President; Mr. Jason Monnig, Quality Control Coordinator; and Mr. Ronald Wise, Quality Control Manager. Mr. Charles Kanipicki, P.E., Quality Control Manager from American Bridge/Flour, a Joint Venture (ABF) was also present during the audit.

The overall scope of work to be provided by Monnig Industries and Phoenix Industries was discussed. Monnig Industries is to perform hot-dip galvanizing of 3” diameter threaded anchor rods in lengths of 17’- 2” and 10’- 0” for the Dyson Corporation. Phoenix Industries will be sub-contracted to perform dry-grit blasting services prior to hot-dip galvanizing.

AUDIT SUMMARY

The main objective of the Department audit was to evaluate Bob Monnig Industries’ overall capabilities to hot-dip galvanize threaded anchor rods for the Self-Anchored Suspension (SAS) Bridge, and to verify the accuracy of the responses provided in the MFSQA.

Mr. John Monnig stated at the onset of the audit that Bob Monnig industries would provide all the QC inspections and documentation for the work performed by Phoenix Industries. The material will be in the control of Bob Monnig Industries, with Phoenix Industries providing only the equipment and personnel required for the dry-grit blasting operations.

Discussion of MFSQA

All sections of the completed MFSQA were reviewed with Bob Monnig Industries during the audit, and Bob Monnig Industries was given the opportunity to expand on their written responses. Only those sections of the MFSQA with significant discussion are addressed below:

Section A, Item 3. Monnig Industries will obtain a copy of ASTM E376 and retain on file. Pursuant to the Contract Special Provisions, fabricator will obtain and posses the latest copy of all applicable specification references.

Section E, Item 2. Certificate of Compliance from Zinc supplier will reflect conformity with ASTM B6. This requirement is referenced in ASTM 153.

Section P, Item 2. Monnig Industries quality control form will be revised to better identify the material throughout the process and document the galvanizing surface thickness. This form shall include heat numbers for traceability and galvanizing surface thickness with minimum and maximum limits as required in the contract.

Monnig industries will address process and procedures to test kettles for zinc composition in the Monnig Industries work plan.

Quality control measures shall address maintaining calibration records and written procedures to document these records.

Section R, Item 3c. Monnig Industries will address parameters for environmental concerns during blasting operation. These parameters include humidity, temperature and other environmental conditions that may affect the dry-grit blasting operation. These concerns and appropriate actions will be addressed in Monnig Industries work plan.

Section R, Item 3d. Adhering test results will be documented on the appropriate quality control form.

Observations during Facility Tour

The OSM Audit Team observed the following processes and conversations during the audit tour at Monnig Industries.

Mr. John Monnig conducted the tour of the Monnig Industries facilities; Mr. Jason Monnig provided the OSM audit team a diagram layout of Monnig Industries. The diagram was useful for identifying the different operations throughout the facility.

The entire facility is owned by Mr. John Monnig, which includes six large industrial units that are primarily used for galvanizing operations. Mr. Monnig also sub-leases space to Phoenix Industries in Unit 5 which is performing the blasting operation for the anchor rods on this contract.

The anchor rods will be shipped from the Dyson Corporation to the Monnig facility where it will be inspected by Monnig Industries QC personnel and stored in Unit 5. If the anchor rods are acceptable they will receive a Monnig Industries green identification tag, which indicates they were inspected and are approved to proceed to the next stage of galvanizing. Damaged anchor rods will receive a red identification tag. Red-tagged material is considered rejected and is not

allowed to proceed to the next stage of galvanizing; a non-conformance report will be written and the rejected anchor rods will be placed in a designated quarantine area.

Green-tagged anchor rods will be stored in Unit 5, where they will be dry-grit blasted. Unit 5 is an enclosed shop; however, limited environmental quality controls were noted during the tour. Additional controls would address contingency plans in the event of adverse weather conditions not conducive to dry-grit blasting.

Upon successful completion of the blasting operation by Phoenix Industries and inspection by Monnig Industries, the material will be transported to Unit 2 for the pre-flux process. The anchor rods will be transported by forklift using skids, hoists, and gantry cranes throughout the galvanizing process. Upon completion of the pre-flux process, the anchor rods will be submerged in one of three hot dip galvanizing kettles: two of the kettles are 25 feet long and the third is 32 feet long. The raw zinc material used for galvanizing is stored in Unit 3. Monnig Industries purchases the raw zinc material (Western Prime Grade) from Horsehead Corporation in Monaca, Pennsylvania.

During the morning audit meeting and during several stages of the tour, Monnig Industries was reminded that acid-pickling of the anchor rods is not permitted for this contract. Jason Monnig advised the OSM audit team that all personnel working on this project will be trained on the contract requirements as referenced in the Monnig work plans.

The contract provides a 4-hour time limit from blasting to initiation of hot-dip galvanizing. During the audit tour, Phoenix Industry and Monnig Industries workers were noted performing a dry run to resolve any issues prior to actual production. The SMR encouraged Mr. John Monnig to use a high grade of steel when performing the blasting dry run to better simulate the properties of the A354 BD rods.

Immediately after galvanizing the rods, QC personnel will brush the threads of the rods. The galvanized rods will be placed on racks adjacent to the galvanizing pits where QC personnel will check and record the galvanizing thickness, run a nut down the threaded portion of the rod, verify that lot identification is maintained, and perform an overall visual inspection of the final product. Conforming material will be identified by a QC tag and moved to Unit 2 or 3, where it will be stored until a Caltrans QA inspection. Following a successful QA inspection, the material will be released for shipment to the jobsite with Caltrans orange tags.

It should also be noted that Monnig Industries operates a mechanical galvanizing plant within this facility. The facility appears to be capable of producing galvanized products that meet the standards of the Department.

SUMMARY OF FINDINGS

Overall, the audit team generally found Monnig Industries capable of performing hot-dip galvanizing of threaded anchor rods as required by the contract.

In summary, the facility was able to demonstrate capabilities satisfactory to meet the contract requirements for performing hot-dip galvanizing provided the following Department Items of Concern (I.O.C.) for this facility are addressed:

1. *Documentation.* Pursuant to the requirements of the contract, Monnig Industries shall obtain and possess current copies of applicable specifications and required Certificates of Compliance. Monnig Industries has shown the ability to obtain this paperwork.

2. *Quality Control.* The policies and practices provided in the MFSQA appear to be adequate with some minor exceptions that were noted during the audit. Monnig Industries are aware of these concerns and are currently making revisions to their work plan to incorporate the necessary procedures to address these concerns. Monnig Industries shall incorporate the following in their revised work plan:
    a. Procedures for recording calibration records;
    b. Procedures and actions addressing environmental concerns during blasting operations;
    c. Procedures that will address documenting required QC test results on QC forms.

CONCLUSION

Based on the Office of Structural Materials Department audit of Monnig Industries and Phoenix Industries in Glasgow, Missouri, OSM recommends a **Contingent Pass** audit for hot-dip galvanizing of threaded anchor rods.

If you have any questions, please call Venkatesh Iyer, Structure Material Representative at (858) 967-6363, or Keith Hoffman at (510) 450-7765.

Signature on file

Venkatesh S. Iyer, Ph.D., P.E.
Structural Materials Representative
Division of Engineering Services
Materials, Engineering, and Testing Services

Office of Structural Materials

Photo 1. Automated control dry-grit blaster operated by Phoenix Industries in Unit 5.

Photo 2. Monnig Industries internal identification tags.

Photo 3. Galvanized components stored in the Monnig Industries yard. Material is supported by pallets, skids, and hoists while being transported by forklifts and gantry cranes through the facility.

Photo 4. A gantry crane transports components to the pickling area in one of the galvanizing units.

Photo 5. Components being pre-fluxed prior to hot-dip galvanizing.

Photo 6. Components being hot-dipped
in one of Monnig's three galvanizing kettles.

Photo 7. Components are placed on supports after hot-dip galvanizing.

Photo 8. Mechanical mill thickness gage used by Monnig Industries to measure galvanizing thickness on components.

Photo 9. Raw zinc material, supplied by Horsehead Industries, is stored in Unit 3.

Photo 10. Automated kettle controls.

ISG PLATE INC.

TO:
WARREN FABRICATING
HUBBARD SIDE (OLD GATX)
WEST END
HUBBARD OH 44452

TEST CERTIFICATE

PAGE NO: 01 OF 01
FILE NO: 8462-01-01
MILL ORDER NO: 71681-003
MELT NO: D4327
DATE: 03/20/07

SOLD TO:
WARREN FABRICATING
CORPORATION
P.O. BOX 1032
WARREN OH 44482

SEND TO:

01-C

CODE MIV

PLATE DIMENSIONS / DESCRIPTION

TOTAL QTY	GAUGE	WIDTH	LENGTH	DESCRIPTION	PIECE WEIGHT
5	3.25"	96"	240"	RECTANGLE	21236#

CUSTOMER INFORMATION

CUSTOMER PO: U.C.R. 4993

SPECIFICATION(S)

THIS MATERIAL HAS BEEN MANUFACTURED AND TESTED IN ACCORDANCE WITH PURCHASE ORDER REQUIREMENTS AND SPECIFICATION(S).

ASTM A709-GR50 YR 05 TYPE-2
IMPACTS WAIVED ASTM A572 04 GRADE 50 TYPE 2
MATERIAL PRODUCED UNDER A CERTIFIED QUALITY MGMT SYSTEM COMPLYING WITH ISO 9001 ABS-QE CERT. NO. 30130

CHEMICAL COMPOSITION

	C	MN	P	S	CU	SI	NI	CR	MO
MELT:D4327	.18	1.14	.011	.006	.21	.22	.13	.14	.05

	V	AL	CB
MELT:D4327	.038	.017	.001

TENSILE PROPERTIES

LOC	DIR	YIELD STRENGTH PSI X 100	TENSILE STRENGTH PSI X 100	ELONGATION GAGE LGTH	%
BOT.	TRANS.	515	807	2.00"	20.0
BOT.	TRANS.	542	813	2.00"	21.0

GENERAL INFORMATION

ALL STEEL HAS BEEN MELTED AND MANUFACTURED IN THE U.S.A.

B/L #65194 NW 190599

Sample Lot B87-007-08
TL-101 C725977

TAG 3381
PO 21958

WE HEREBY CERTIFY THE ABOVE INFORMATION IS CORRECT:

QUALITY ASSURANCE LABORATORY
COATESVILLE, PA 19320

Elinore Zaplitny
SUPERVISOR - TEST REPORTING
ELINORE ZAPLITNY

Coatesville/Conshohocken Test Report

SHIP TO:
TAYLOR EQUIPMENT & MACHINE
TOOL CORPORATION
ROUTE 1
HIGHWAY 15 NORTH
LOUISVILLE MS 39339

ISG ORDER NO : G377-9502C
FILE NO: 7805-01-0
MILL ORDER NO: 95219-003
MELT NO: D8402
SLAB NO: 10
DATE: 04/19/08

PO #22393
TMS #3982

SOLD TO:
TEMTCO STEEL
P O BOX 887
LOUISVILLE MS 39339

CODE MIW

PLATE DIMENSIONS / DESCRIPTION

TOTAL QTY	GAUGE	WIDTH	LENGTH	DESCRIPTION	PIECE WEIGHT
1	1.5"	96"	240"	RECTANGLE	9801#

CUSTOMER INFORMATION

CUSTOMER PO: L5379JP

Sample Cut B87-007-08
TL-101 C725977

SPECIFICATION(S)

THIS MATERIAL HAS BEEN MANUFACTURED AND TESTED IN ACCORDANCE WITH PURCHASE ORDER REQUIREMENTS AND SPECIFICATION(S).

ASTM A514 YR 05 GR H
MATERIAL PRODUCED UNDER A CERTIFIED QUALITY MGMT SYSTEM COMPLYING WITH ISO 9001 ABS-QE CERT. NO. 30130

CHEMICAL COMPOSITION

	C	MN	P	S	CU	SI	NI	CR	MO
MELT:D8402	.18	1.01	.012	.003	.18	.26	.35	.52	.25

	V	B	AL	CB
MELT:D8402	.045	.0022	.033	.002

MANUFACTURE

MCQUAID-EHN GRAIN SIZE PER E112 - 7-8

Q.A. REVIEWED
DATE 5/29/08
DYSON

HEAT TREAT CONDITION

Coatesville/Conshohocken Test Report

CODE MIW

MATL OR TEST	HEAT TREAT DESCRIPTION	NOM TEMP	HOLD MINS	COOL MTHD
PL/TEST	HARDEN	1675F	38	W.QUENCH
PL/TEST	TEMPER	1275F	66	W.QUENCH

TENSILE PROPERTIES

SLAB NO.	LOC	DIR	YIELD STRENGTH PSI X 100	TENSILE STRENGTH PSI X 100	ELONGATION GAGE LGTH	%	%R.A.
10	BOT.	TRANS.	1110	1194	2.00"	20.0	66.0

SLAB NO: 10

GENERAL INFORMATION

ALL STEEL HAS BEEN MELTED AND MANUFACTURED IN THE U.S.A.

IT IS IMPORTANT TO NOTE THAT THIS GRADE OF STEEL MAY BE SUSCEPTIBLE TO CRACKING IN THE HEAT AFFECTED ZONE OF WELDS DURING POST-WELD HEAT TREATMENT (STRESS RELIEF) OR ELEVATED TEMPERATURE SERVICE. ALSO POST-WELD HEAT TREATMENT OR ELEVATED TEMPERATURE SERVICE MAY DEGRADE HEAT AFFECTED ZONE TOUGHNESS.

WE RECOMMEND THAT CAREFUL CONSIDERATION BE GIVEN TO THESE PHENOMENA BY COMPETENT WELDING ENGINEERS BEFORE APPLICATION. IF THIS MATERIAL IS SUBJECT TO RESALE THIS WARNING SHOULD BE GIVEN TO EACH SUBSEQUENT USER.

Sample Lot B87-007-08
TL-101 C725977

Q.A. REVIEWED
DATE 5/29/08
DYSON

MIS

GERDAU AMERISTEEL

ST PAUL STEEL MILL
1678 RED ROCK ROAD
ST PAUL MN 55119 USA
(651) 731-5600

Chemical and Physical Test Report

MADE IN UNITED STATES

M-058938

PRODUCED IN: ST PAUL

CODE MIS

SHIP TO	INVOICE TO	SHIP DATE
DYSON CORPORATION, THE 53 FREEDOM ROAD PAINESVILLE, OH 44077	DYSON CORPORATION, THE 53 FREEDOM ROAD PAINESVILLE, OH 44077	05/27/08 CUST. ACCOUNT NO 70000111

SHAPE + SIZE	GRADE	SPECIFICATION	SALES ORDER	CUST P.O. NUMBER
R3SBQ	A4140	A322-07 A29/A29M-05	8058970-01	59895-01

HEAT I.D.	C	Mn	P	S	Si	Cu	Ni	Cr	Mo	V	Nb	N	Sn	Al	Ti	Ca	Zn	Co
M644912	.41	.92	.014	.034	.23	.20	.10	.98	.160	.030	.003	.0102	.019	.001	.00200	.00060	.00100	.007

Mechanical Test: Red R 5.99 Std Dev:0 Idl Diam: 5.46
Cleanliness Test
Grain Test: Grain Size Units Fine (5-8) Macro Etch:2
Hardness Test: HB 293.0
Customer Requirements SOURCE: GA-STP CASTING: STRAND CAST

Q.A. REVIEWED
DATE 5/29/08
DYSON

Customer Notes

NO WELD REPAIR MERCURY-BEARING INSTRUMENTS AND/OR EQUIPMENT ARE NOT USED IN THE MANUFACTURE OR TESTING OF THIS PRODUCT.

This material, including the billets, was produced and manufactured in the United States of America

THE ABOVE FIGURES ARE CERTIFIED EXTRACTS FROM THE ORIGINAL CHEMICAL AND PHYSICAL TEST RECORDS AS CONTAINED IN THE PERMANENT RECORDS OF COMPANY.

Bhaskar Yalamanchili
Quality Director
Gerdau Ameristeel

Mgr. Metallurg. Svcs.
ST PAUL STEEL MILL

Seller warrants that all material furnished shall comply with specifications subject to standard published manufacturing variations. NO OTHER WARRANTIES, EXPRESSED OR IMPLIED, ARE MADE BY THE SELLER, AND SPECIFICALLY EXCLUDED ARE WARRANTIES OF MERCHANTABILITY AND FITNESS FOR A PARTICULAR PURPOSE.
In no event shall seller be liable for indirect, consequential or punitive damages arising out of or related to the materials furnished by seller.
Any claim for damages for materials that do not conform to specifications must be made from buyer to seller immediately after delivery of same in order to allow the seller the opportunity to inspect the material in question.

M15

GERDAU AMERISTEEL

ST PAUL STEEL MILL
1678 RED ROCK ROAD
ST PAUL MN 55119 USA
(651) 731-5600

Chemical and Physical Test Report

MADE IN UNITED STATES

M-058938

PRODUCED IN: ST PAUL

CODE M152

SHIP TO	INVOICE TO	SHIP DATE
DYSON CORPORATION, THE 53 FREEDOM ROAD PAINESVILLE, OH 44077	DYSON CORPORATION, THE 53 FREEDOM ROAD PAINESVILLE, OH 44077	05/27/08 CUST. ACCOUNT NO 70000111

SHAPE + SIZE	GRADE	SPECIFICATION	SALES ORDER	CUST P.O. NUMBER
R3SBO	A4140	A322-07 A29/A29M-05	8058970-01	59695-01

HEAT I.D.	C	Mn	P	S	Si	Cu	Ni	Cr	Mo	V	Nb	N	Sn	Al	Ti	Ca	Zn	Co
M644912	.41	.92	.014	.034	.23	.20	.10	.98	.160	.030	.003	.0102	.019	.001	.00200	.00060	.00100	.007

Mechanical Test: Red R 5.99 Std Dev:0 Idl Diam: 5.46
Cleanliness Test
Grain Test: Grain Size Units Fine (5-8) Macro Etch:2
Hardness Test: HB 293.0
Customer Requirements SOURCE: GA-STP CASTING: STRAND CAST

Q.A. REVIEWED
DATE 5/29/08
DYSON

Customer Notes

NO WELD REPAIR MERCURY-BEARING INSTRUMENTS AND/OR EQUIPMENT ARE NOT USED IN THE MANUFACTURE OR TESTING OF THIS PRODUCT.

This material, including the billets, was produced and manufactured in the United States of America

THE ABOVE FIGURES ARE CERTIFIED EXTRACTS FROM THE ORIGINAL CHEMICAL AND PHYSICAL TEST RECORDS AS CONTAINED IN THE PERMANENT RECORDS OF COMPANY.

Bhaskar Yalamanchili
Quality Director
Gerdau Ameristeel

Mgr. Metallurg. Svcs.
ST PAUL STEEL MILL

Seller warrants that all material furnished shall comply with specifications subject to standard published manufacturing variations. NO OTHER WARRANTIES, EXPRESSED OR IMPLIED, ARE MADE BY THE SELLER, AND SPECIFICALLY EXCLUDED ARE WARRANTIES OF MERCHANTABILITY AND FITNESS FOR A PARTICULAR PURPOSE.
In no event shall seller be liable for indirect, consequential or punitive damages arising out of or related to the materials furnished by seller.
Any claim for damages for materials that do not conform to specifications must be made from buyer to seller immediately after delivery of same in order to allow the seller the opportunity to inspect the material in question.

MJF

GERDAU AMERISTEEL

ST PAUL STEEL MILL
1678 RED ROCK ROAD
ST PAUL MN 55119 USA
(651) 731-5600

Chemical and Physical Test Report

MADE IN UNITED STATES

M-058925

PRODUCED IN: ST PAUL

CODE MJF

SHIP TO	INVOICE TO	SHIP DATE
TC INDUSTRIES INC 3703 S RT 31 CRYSTAL LAKE, IL 60012	DYSON CORPORATION, THE 53 FREEDOM ROAD PAINESVILLE, OH 44077	05/27/08 CUST. ACCOUNT NO 70000111

SHAPE + SIZE	GRADE	SPECIFICATION	SALES ORDER	CUST P.O. NUMBER
R3SBQ	A4140	A322-07 A29/A29M-05, A304-05E2, E381-01(2008)	8051062-01	59895-01

HEAT I.D.	C	Mn	P	S	Si	Cu	Ni	Cr	Mo	V	Nb	N	Sn	Al	Ti	Ca	Zn	Co
M644914	.41	.92	.014	.034	.23	.20	.10	.98	.160	.030	.003	.0102	.019	.001	.00200	.00060	.00100	.007

Mechanical Test: Red R 5.99 Std Dev:0 Idl Diam: 5.46
Cleanliness Test

Grain Test: MACRO S-2, R-1, C-2 Macro Etch:2
Hardness Test: HB Grain Size Units Fine (5-8)
Jominy: JOMINY INFO ONLY 293.0

J1	J2	J3	J4	J5	J6	J7	J8	J9	J10	J12	J14	J16	J18	J20	J24	J28	J32
57	57	57	57	57	57	57	57	56	54	52	50	48	47	45	43	43	40

Customer Requirements SOURCE: GA-STP CASTING: STRAND CAST
Comment: Steel not exposed to mercury, no weld repairment performed
melt shop heat #81922M

Q.A. REVIEWED
DATE 6/4/08
DYSON

Customer Notes

NO WELD REPAIR MERCURY-BEARING INSTRUMENTS AND/OR EQUIPMENT ARE NOT USED IN THE MANUFACTURE OR TESTING OF THIS PRODUCT.

This material, including the billets, was produced and manufactured in the United States of America

THE ABOVE FIGURES ARE CERTIFIED EXTRACTS FROM THE ORIGINAL CHEMICAL AND PHYSICAL TEST RECORDS AS CONTAINED IN THE PERMANENT RECORDS OF COMPANY.

Bhaskar Yalamanchili
Quality Director
Gerdau Ameristeel

Mgr. Metallurg. Svcs.
ST PAUL STEEL MILL

Seller warrants that all material furnished shall comply with specifications subject to standard published manufacturing variations. NO OTHER WARRANTIES, EXPRESSED OR IMPLIED, ARE MADE BY THE SELLER, AND SPECIFICALLY EXCLUDED ARE WARRANTIES OF MERCHANTABILITY AND FITNESS FOR A PARTICULAR PURPOSE.
In no event shall seller be liable for indirect, consequential or punitive damages arising out of or related to the materials furnished by seller.
Any claim for damages for materials that do not conform to specifications must be made from buyer to seller immediately after delivery of same in order to allow the seller the opportunity to inspect the material in question.

CERTIFIED TEST REPORT

DYSON CORP.
DTN DOMESTIC NUT
53 Freedom Road
Painesville, OH 44077
440-946-3500
440-352-2700 fax

DYSON ORDER#	CUSTOMER ORDER#	ITEM NUMBER	QUANTITY SHIPPED	DATE SHIPPED
L 98972	660110-SA-017 CO9	2 of 13	4 pcs	8/13/08

CUSTOMER
American Bridge / Fluor JV
375 Burma Road
Oakland, CA 94607

USA

DRAWING
ANSI

PRODUCT DESCRIPTION
3.00"-4UNC-2B heavy hex spherical nut per Dyson Dwg. #3.00 Spherical Nut.ipt dated 3/25/08. HDG per ASTM-A153 & tapped .050" oversize with wax & dye.

SPECIFICATIONS
ASTM-A563 Grade DH with special provisions 10-1.59, 10-1.60, 10-1.61 std specifications 75-1.05

STARTING MATERIAL	DIA	GRADE	QTY	LOT CODE	HEAT NO.	ORIGINAL MILL
Round Bar	3.500	1045	4	LTZ13	A073667	Steel Dynamics

The product listed above was manufactured, tested, sampled, and inspected in accordance with the specification, purchase order, and any supplementary requirements and was found to meet those requirements unless otherwise noted.
Hardness Results: 269 HBW

Sample Lot BB7-007-08
TC-101 C725977

Attachments:
Mill Test Report
Galvanizing Certification

Deborah A. Smith
Q.A. Admin. Assistant
8/13/08

American Bridge / FLUOR
A JOINT VENTURE

375 Burma Road
Oakland, CA 94607 USA
Phone (510) 808-4600
Fax (510) 808-4601

SAN FRANCISCO OAKLAND BAY BRIDGE
EAST SPAN SEISMIC SAFETY PROJECT

SELF-ANCHORED SUSPENSION BRIDGE
(Superstructure and Tower)

Caltrans Contract No. 04-0120F4
Bridge No. 34-0006L/R
District 04 County SF Route 80 Kilometer Post 13.2 / 13.9

Submittal ABF- SUB-000689R01:
E2 Shear Key Embedded Anchor Rod Assemblies

Baseline Schedule Activity ID: N/A

Prepared By: American Bridge / Fluor Enterprises Inc., A Joint Venture

Date: May 14, 2008
Revision 1

TABLE OF CONTENTS

DESCRIPTION **PAGES**
E2 Shear Key High Strength Rod and Guide Pipe Details (DE 325A, Rev. 1)..... 1
E2 Bearing and Shear Key High Strength Rod and Guide Pipe Details (DE 326A, Rev. 0)..... 1
Spherical Nut and Washer Detail Sheets..... 3

☐ APPROVED
☒ APPROVED AS NOTED
☐ NOT APPROVED

Pursuant to Section 5-1.02
of the Standard Specifications
State of California
DEPARTMENT OF TRANSPORTATION

Signed Ron Matsuyoshi
Structure Representative
Date June 09 – 2008 RM

REGISTERED PROFESSIONAL ENGINEER
KEVIN M. SMITH
No. C 62218
Exp. 9/30/09
CIVIL
STATE OF CALIFORNIA

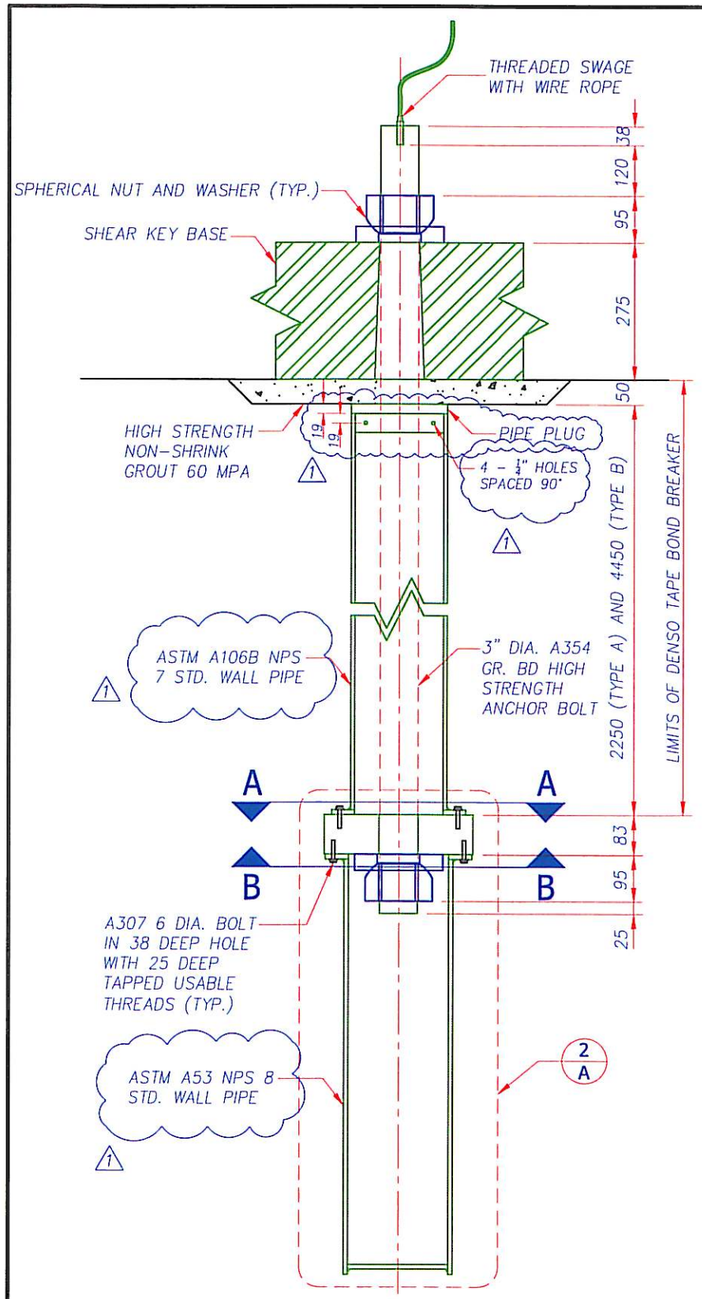

SHEAR KEY ROD ASSEMBLY

1/A TYPE A AND TYPE B

SCALE : 1:12

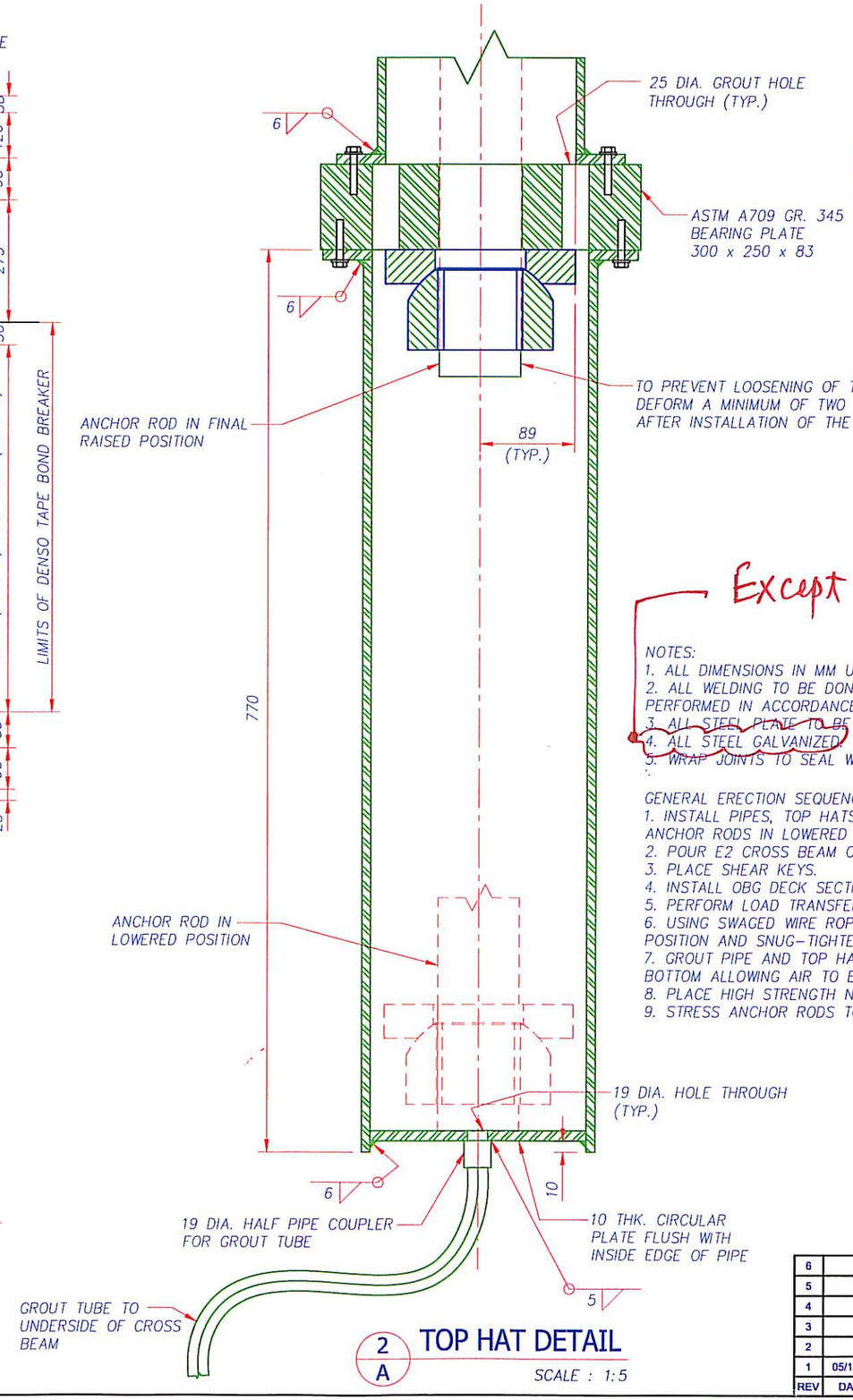

TOP HAT DETAIL

2/A

SCALE : 1:5

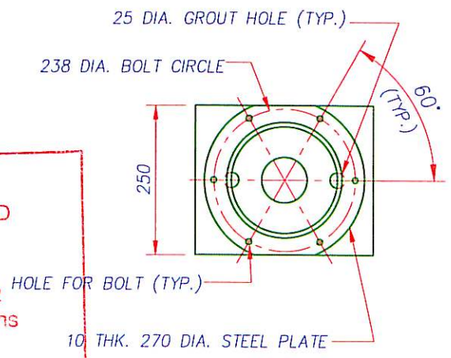

SECTION A-A

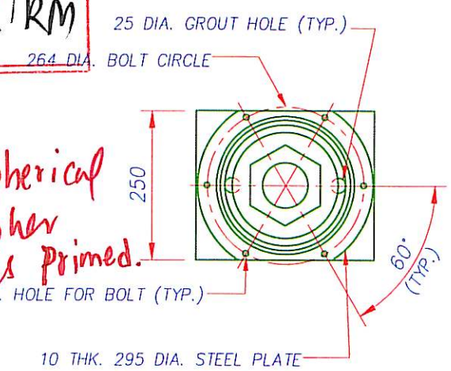

SECTION B-B

☐ APPROVED
☒ APPROVED AS NOTED
☐ NOT APPROVED

Pursuant to Section 5-1.02 of the Standard Specifications State of California DEPARTMENT OF TRANSPORTATION

Signed Ron Matson/for RM
Structure Representative

Date June 09-2008

Except for the A514 Spherical Plate Washer which is primed.

NOTES:
1. ALL DIMENSIONS IN MM UNLESS OTHERWISE NOTED.
2. ALL WELDING TO BE DONE USING E70XX ELECTRODES PERFORMED IN ACCORDANCE WITH AWS D1.1.
3. ~~ALL STEEL PLATE TO BE A36 UNLESS OTHERWISE NOTED.~~
4. ~~ALL STEEL GALVANIZED.~~
5. ~~WRAP JOINTS TO SEAL WITH TWO LAYERS OF DUCT TAPE.~~

GENERAL ERECTION SEQUENCE:
1. INSTALL PIPES, TOP HATS, ANCHOR RODS AND ACCESSORIES WITH ANCHOR RODS IN LOWERED POSITION.
2. POUR E2 CROSS BEAM CONCRETE.
3. PLACE SHEAR KEYS.
4. INSTALL OBG DECK SECTIONS
5. PERFORM LOAD TRANSFER.
6. USING SWAGED WIRE ROPE, LIFT ANCHOR RODS INTO RAISED POSITION AND SNUG-TIGHTEN TOP NUTS.
7. GROUT PIPE AND TOP HAT FOR THE SHEAR KEY RODS FROM THE BOTTOM ALLOWING AIR TO ESCAPE THROUGH THE TOP.
8. PLACE HIGH STRENGTH NON-SHRINK GROUT BENEATH BASE PLATE.
9. STRESS ANCHOR RODS TO 0.7Fu.

REGISTERED PROFESSIONAL ENGINEER KEVIN M. SMITH No. C 62218 Exp. 9/30/09 CIVIL STATE OF CALIFORNIA

REV	DATE	BY	DESCRIPTION
6			
5			
4			
3			
2			
1	05/13/08	ML	MATERIAL GRADE AND PIPE PLUG

STATE OF CALIFORNIA
DEPARTMENT OF TRANSPORTATION
CONTRACT NO. 04-0120F4
BRIDGE NO. 34-0006L/R

DISTRICT	COUNTY	ROUTE	KILOMETER POST
04	SF	80	13.2 / 13.9

SAN FRANCISCO OAKLAND BAY BRIDGE
EAST SPAN SEISMIC SAFETY PROJECT
SELF ANCHORED SUSPENSION BRIDGE
(SUPERSTRUCTURE AND TOWER)

E2 CROSS BEAM
SHEAR KEY
HIGH STRENGTH ROD GUIDE PIPE DETAILS

American Bridge / FLUOR
A JOINT VENTURE

Made By: M. LEWIS Date: 04/28/2008
Checked By: L. GATSOS Date: 04/29/2008
In Charge Of: K. SMITH

Job No. 660110
Sheet No. DE 325 A
Scale:
Revision: 1

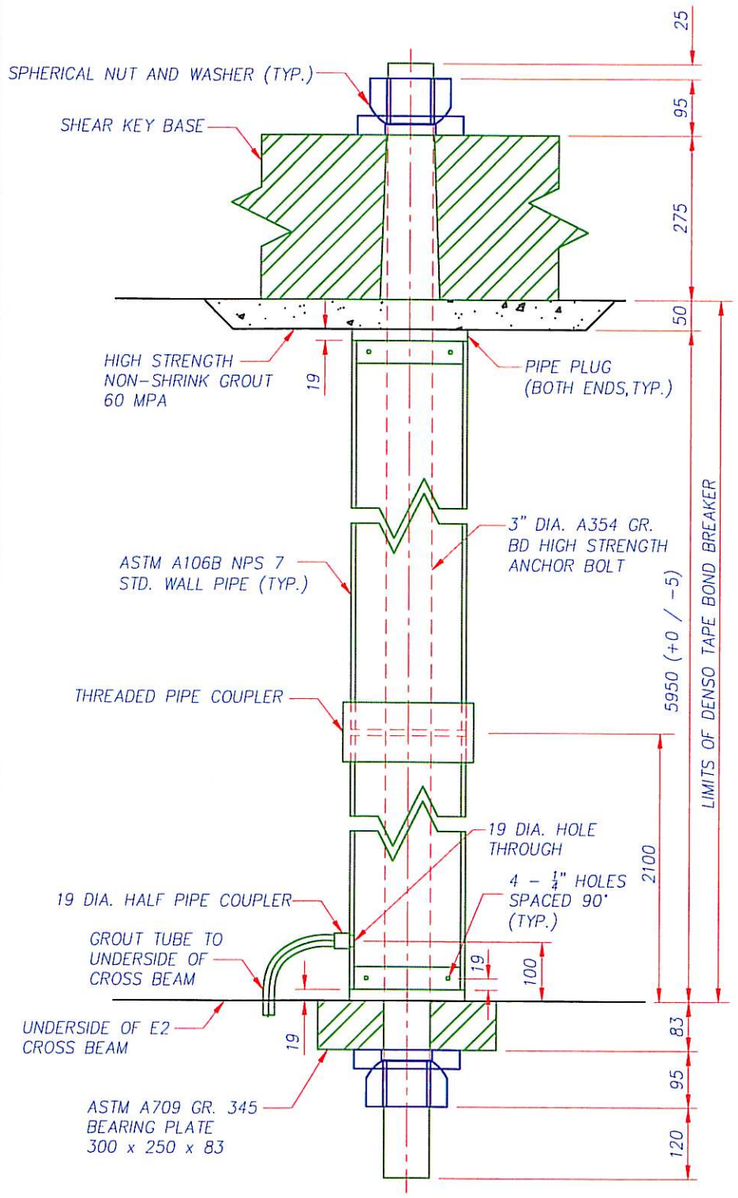

SHEAR KEY ROD ASSEMBLY

1/A

TYPE C

SCALE : 1:10

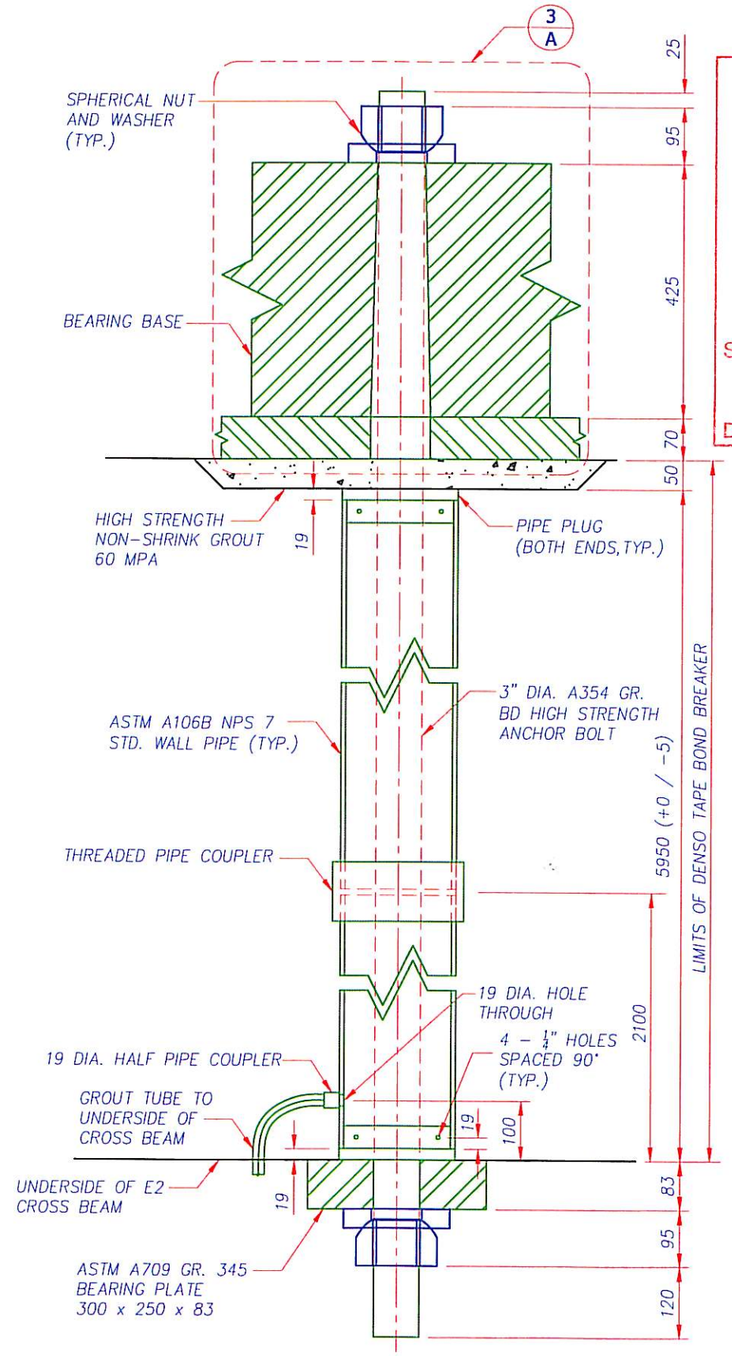

BEARING ROD ASSEMBLY

2/A

SCALE : 1:10

APPROVED

APPROVED AS NOTED

NOT APPROVED

Pursuant to Section 5-1.05 of the Standard Specifications State of California

DEPARTMENT OF TRANSPORTATION

Signed Ron Martinez/RM

Structure Representative

Date June 09-2008

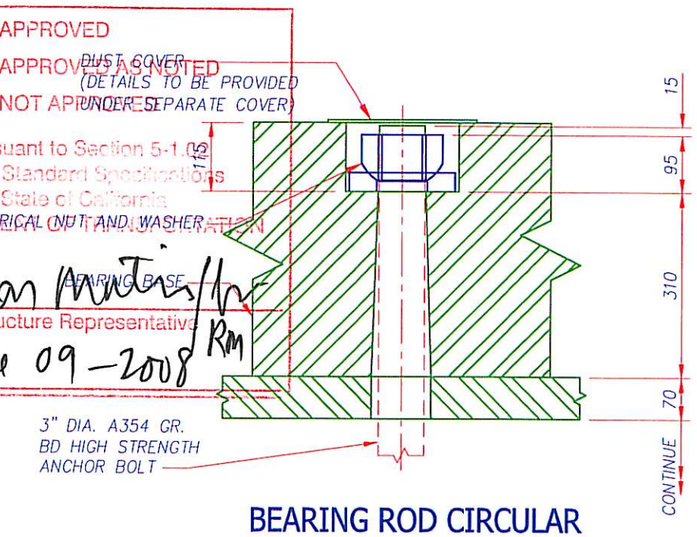

BEARING ROD CIRCULAR RECESS DETAIL

3/A

SCALE : 1:10

GENERAL ERECTION SEQUENCE:
1. INSTALL PIPE.
2. POUR E2 CROSS BEAM CONCRETE.
3. INSTALL BEARING AND SHEAR KEY RODS ON TEMP. FALSEWORK IN RETRACTED POSITION.
4. PLACE BEARINGS AND SHEAR KEYS.
5. INSTALL OBG DECK SECTIONS
6. PERFORM LOAD TRANSFER.
7. LIFT ANCHOR RODS INTO RAISED POSITION AND SNUG-TIGHTEN TOP NUTS.
8. GROUT PIPE FROM THE BOTTOM ALLOWING AIR TO ESCAPE THROUGH THE TOP.
9. PLACE HIGH STRENGTH NON-SHRINK GROUT BENEATH BASE PLATE.
10. STRESS ANCHOR RODS TO 0.7Fu.

NOTES:
1. ALL DIMENSIONS IN MM UNLESS OTHERWISE NOTED.
2. ALL PIPE, ANCHOR RODS, AND ACCESSORIES GALVANIZED.

REV	DATE	BY	DESCRIPTION
6			
5			
4			
3			
2			
1			

REGISTERED PROFESSIONAL ENGINEER KEVIN M. SMITH No. C 62218 Exp. 9/30/09 CIVIL STATE OF CALIFORNIA

STATE OF CALIFORNIA
DEPARTMENT OF TRANSPORTATION
CONTRACT NO. 04-0120F4
BRIDGE NO. 34-0006L/R

DISTRICT	COUNTY	ROUTE	KILOMETER POST
04	SF	80	13.2 / 13.9

SAN FRANCISCO OAKLAND BAY BRIDGE
EAST SPAN SEISMIC SAFETY PROJECT
SELF ANCHORED SUSPENSION BRIDGE
(SUPERSTRUCTURE AND TOWER)

E2 CROSS BEAM
BEARING AND SHEAR KEY ANCHOR RODS
HIGH STRENGTH ROD GUIDE PIPE DETAILS

American Bridge / FLUOR
A JOINT VENTURE

Made By: M. LEWIS Date: 05/13/2008
Checked By: L. GATSOS Date: 05/13/2008
In Charge Of: K. SMITH

Job No. 660110
Sheet No. DE 326 A
Scale:
Revision: 0

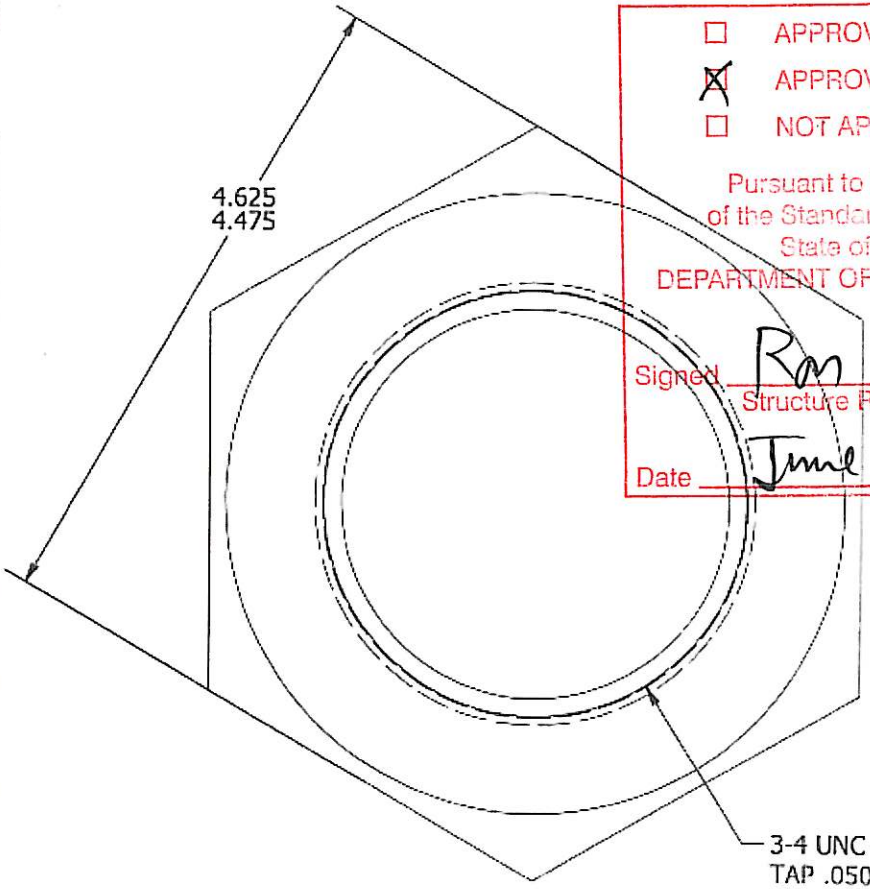

☐ APPROVED
☒ APPROVED AS NOTED
☐ NOT APPROVED

Pursuant to Section 5-1.02
of the Standard Specifications
State of California
DEPARTMENT OF TRANSPORTATION

Signed Ron Matin / for
Structure Representative

Date June 09-2008 RM

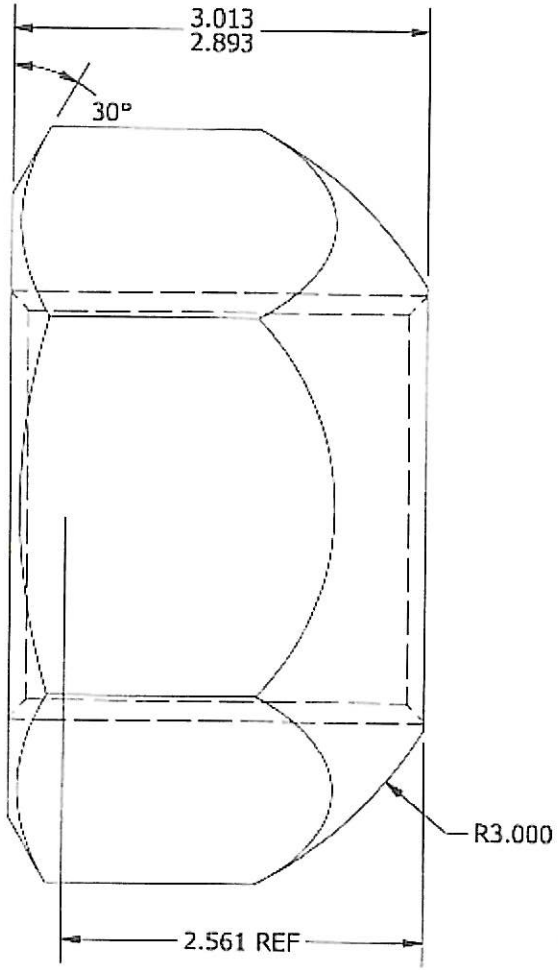

ENGINEERING
MAR 25 2008
DYSON CORP.

DRAFT

THE DYSON CORPORATION
53 FREEDOM RD. PAINESVILLE, OH 44077
440.946.3500 FAX 440.352.2700

TOLERANCES UNLESS OTHERWISE SPECIFIED	ASSIGNED BY		CUST: AMERICAN BRIDGE
.00, FRACTIONS ± N/A	KW	3/25/2008	PROJECT: 3.00"-4 UNC-2B +.050 O/S
.000 ± N/A	DRAWN BY		MATL: ASTM A563 GR DH (HDG)
ANGLES ± N/A	Pat	3/25/2008	
FINISH ± 250	APPROVED BY		PC # / SO #
CONCENTRICITY ± N/A			DWG. NAME: 3.00 Spherical Nut.ipt / REV

C:\PROJECTS\CUSTOMERS\American Bridge\American Bridge Oakland Bay\3.00 HHN Spherical Fasteners\3.00 Spherical Nut.ipt

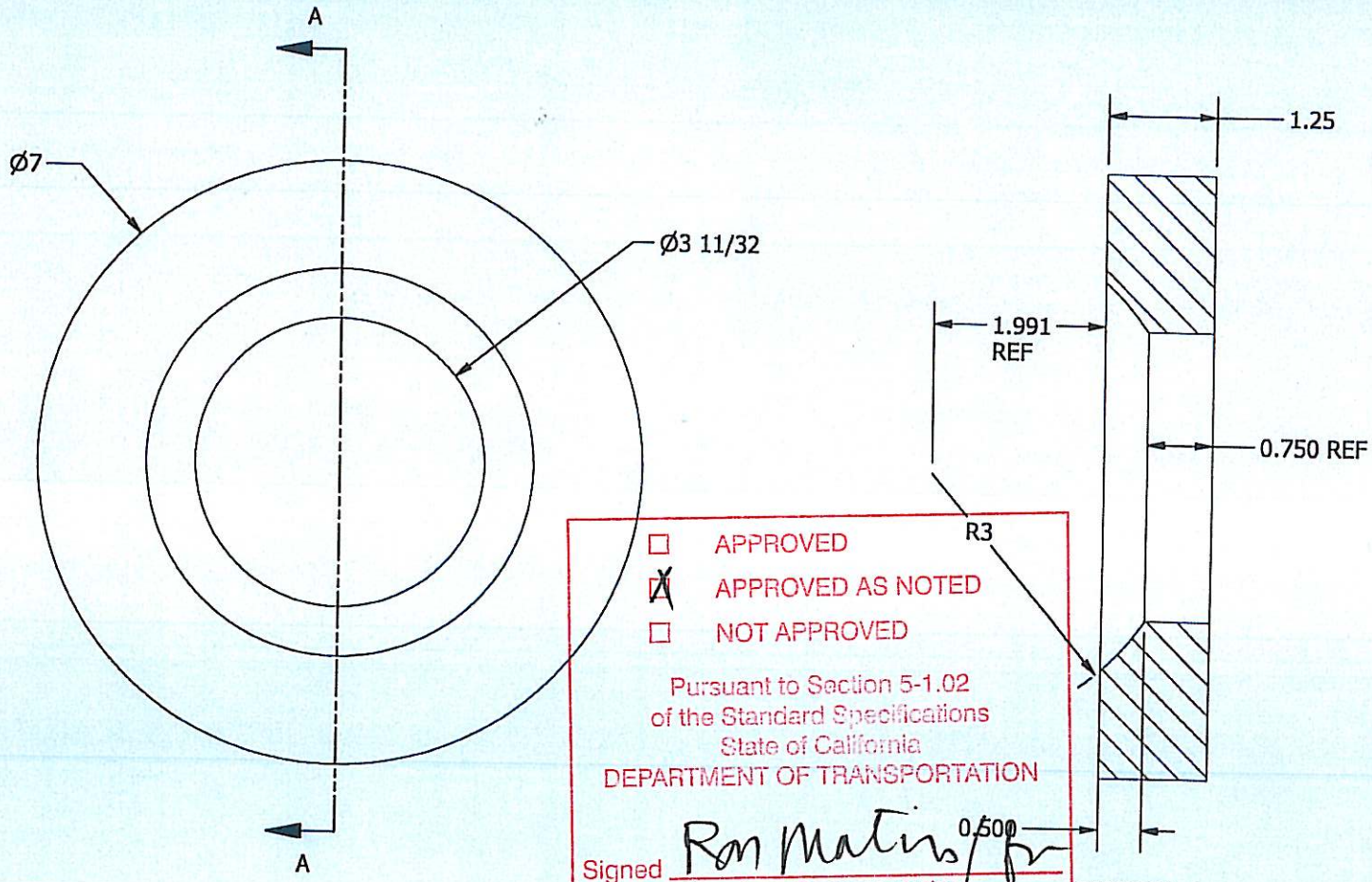

☐ APPROVED
☒ APPROVED AS NOTED
☐ NOT APPROVED

Pursuant to Section 5-1.02
of the Standard Specifications
State of California
DEPARTMENT OF TRANSPORTATION

Signed Ron Matias/for
Structure Representative

Date June 09-2008 RM

ENGINEERING
MAR 13 2008
DYSON CORP.

DRAFT

NAME	DATE
SIGNATURE APPROVAL	

TOLERANCES
UNLESS OTHERWISE SPECIFIED
.00, FRACTIONS ± 1/16
.000 ± 1/64
ANGLES ± N/A
FINISH ± 250
CONCENTRICITY ±

ASSIGNED BY	KW	3/13/2008
DRAWN BY	Pat	3/13/2008
APPROVED BY		

THE DYSON CORPORATION
53 FREEDOM RD. PAINESVILLE, OH 44077
440.946.3500 FAX 440.352.2700

CUST: AMERICAN BRIDGE
PROJECT: 3.00 SPHERICAL PLATE WASHER
MATL: ASTM ~~A572 Gr. 50 (HDG)~~
A514 - CHANGE BY ABF 4-30-2008
PO # SO #
DWG. NAME: Spherical Round Plate.ipt REV

C:\PROJECTS\CUSTOMERS\American Bridge\American Bridge Oakland Bay\3.00 HHN Spherical Fasteners\Spherical Round Plate.ipt

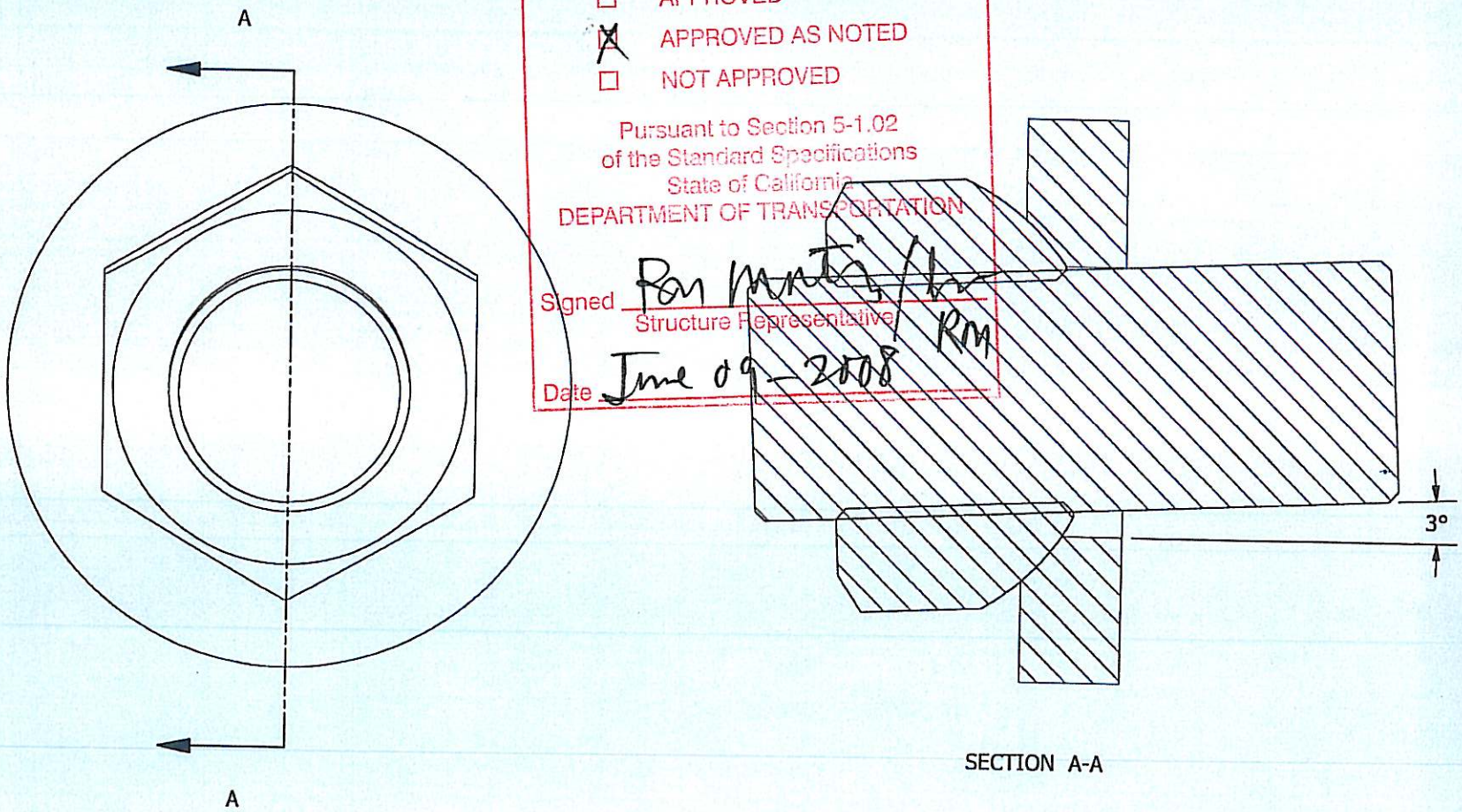

☐ APPROVED
☒ APPROVED AS NOTED
☐ NOT APPROVED

Pursuant to Section 5-1.02
of the Standard Specifications
State of California
DEPARTMENT OF TRANSPORTATION

Signed Ron Martin/Ln RM
Structure Representative

Date June 09 - 2008

ENGINEERING
MAR 13 2008
DYSON CORP.

DRAFT

THE DYSON CORPORATION
53 FREEDOM RD. PAINESVILLE, OH 44077
440.946.3500 FAX 440.352.2700

NAME	DATE
SIGNATURE APPROVAL	

TOLERANCES
UNLESS OTHERWISE SPECIFIED
.00, FRACTIONS ± N/A
.000 ± N/A
ANGLES ± N/A
FINISH ± N/A
CONCENTRICITY ± N/A

ASSIGNED BY	KW	3/13/2008
DRAWN BY	Pat	3/13/2008
APPROVED BY		

CUST: AMERICAN BRIDGE
PROJECT: 3" SPHERICAL ASSY
MATL: N/A
PO # SO #
DWG. NAME: 3.00 Round Spherical Assy.iam REV

C:\PROJECTS\CUSTOMERS\American Bridge\American Bridge Oakland Bay\3.00 HHN Spherical Fasteners\3.00 Round Spherical Assy.iam

REQUEST FOR INFORMATION (RFI)

RFI No.: ABF-RFI-001233R03 **Submitted By:** Gatsos, Levi **Pages:** 1
Pages Attached:

RFI Date: 19-June-2008 **Contact Name:** Gatsos, Levi **Phone No.** 510-808-4600

Subject: E2 Bearing and Shear Key Anchor Rod Spherical Washers

References:

Sub/Sup: DYS **Sub RFI #:**

Response Required by: 20-June-2008 **Response affects critical path activity?** Yes

Description:

Per WDC discussions on June 19, 2008, please approve the attached detail for the Proof Test Rod Assembly.

Contractor Disposition:

This RFI is being submitted for:

The Cost and Time Impact from this RFI is: Cost and/or time impacts in the performance of our Work will result.

Response:

Agreed Ext. Due Date:

Pages: 1
Pages Attached: 0

The Proof Test Rod Assembly is acceptable as presented in this RFI.

Administrative Action:

This response resolves the RFI.

Date: 19-June-2008	**Respondent:** Matin, Ron	**Phone No.:** 510-808-4611

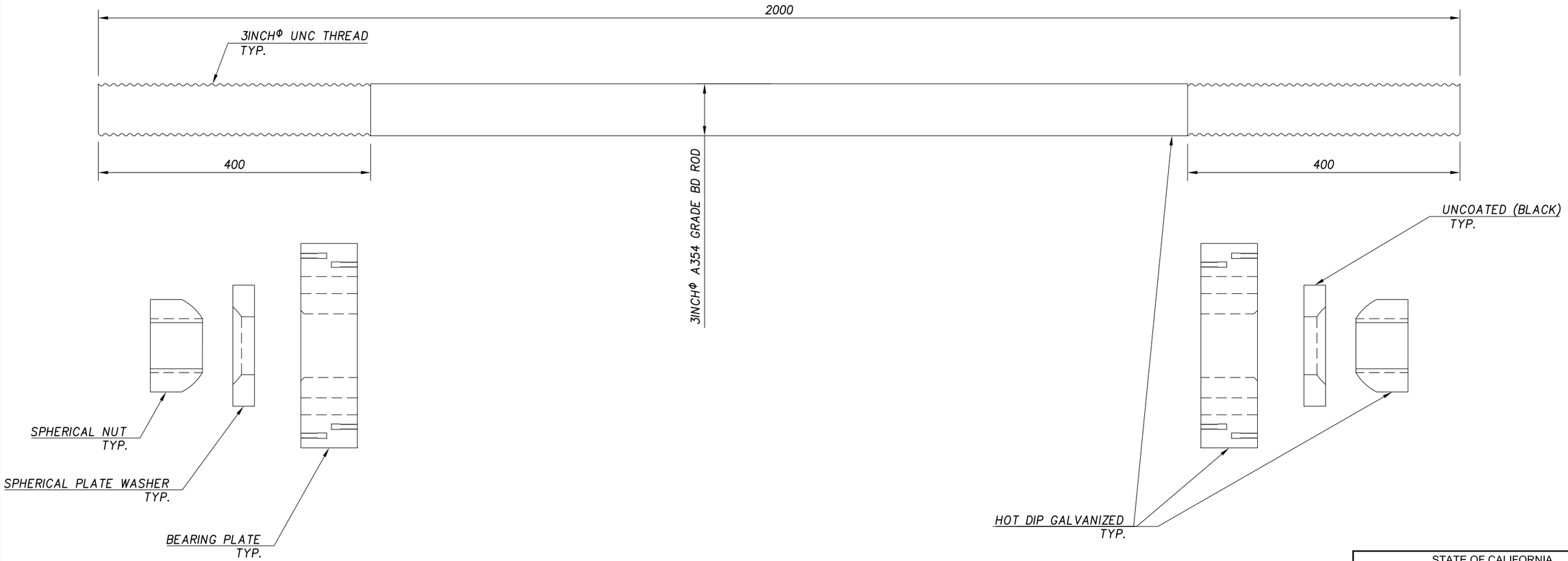

PROOF TEST ROD ASSEMBLY
(2 ASSEMBLIES REQUIRED)

NOTES:
1. ALL GALVANIZING SHALL BE PER CONTRACT REQUIREMENTS FOR A354 GRADE BD ROD.
2. PROOF TEST RODS TO BE PROVIDED PER CALTRAN'S REQUEST (REFERENCE DEPARTMENT'S RESPONSE TO ABF-SUB-000689R01).
3. GALVANIZING AND CUTTING OF THREADS SHALL BE PERFORMED IN THE SAME MANNER AS THE PRODUCTION RODS, NUTS, AND WASHERS.
4. ALL UNITS ARE IN MILLIMETERS UNLESS NOTED OTHERWISE.

REV	DATE	BY	DESCRIPTION
6			
5			
4			
3			
2			
1			

STATE OF CALIFORNIA
DEPARTMENT OF TRANSPORTATION
CONTRACT NO. 04-0120F4
BRIDGE NO. 34-0006L/R

DISTRICT	COUNTY	ROUTE	KILOMETER POST
04	SF	80	13.2 / 13.9

SAN FRANCISCO OAKLAND BAY BRIDGE
EAST SPAN SEISMIC SAFETY PROJECT
SELF ANCHORED SUSPENSION BRIDGE
(SUPERSTRUCTURE AND TOWER)

ABF-RFI-001233R03
PROOF TEST ROD ASSEMBLY

American Bridge / FLUOR
A JOINT VENTURE

Made By: L. Gatsos Date: 6/19/2008
Checked By: K. Smith Date: 6/19/2008
In Charge Of: R. CROCKETT

Job No. 660110
Sheet No. 1 OF 1
Scale: 1:6
Revision: 0

STORK
Materials Technology

Stork Herron Testing Laboratories

7/14/2008

Debbie Smith
Dyson Corp
53 Freedom Rd
Painesville, OH 44077-1232

Date Received: 7/11/2008

Test Report No.: DYS006-08-07-63280-1

Material Testing and Non-Destructive Testing

5405 E. Schaaf Road
Cleveland, OH 44131
USA

Telephone : (216) 524-1450
Fax : (216) 524-1459
Website : www.storkherron.com

TEST REPORT

P.O. No.: 60907

Sample Description: One (1) 3" Diameter Test Pc., Material: AISI 4140, ASTM A354, Grade BD, Job # L98971, Customer PO# 660110-SA-017 CO9, Heat Code:/Heat #: M644912/MIS2

TENSILE TEST PER ASTM E8-04, ASTM A370-07a

	Dia. (in.)	Yield Strength .2% offset (ksi)	Ultimate Strength (ksi)	Elongation in 4D (%)	Reduction of Area (%)
Results	.5030	127	152	14	40
Specification		115 Min.	140 Min.	14 Min.	40 Min.

CONFORMANCE

The sample meets the tensile requirements of ASTM A354, Grade BD.

QUALITY ASSURANCE STATEMENT
The above services were performed in accordance with Herron Testing Laboratories' Quality Assurance Program Edition #1, Revision 2 dated 1/30/07 as audited and approved by Dyson Corporation on 3/12/07.

This material was not contaminated by mercury or chlorinated solvents during the handling and processing at Stork-Herron Testing Laboratories facilities.

The reported results represent the actual attributes of the material tested and indicate full compliance with all applicable specification and contract requirements.

Sample Lot B87-007-08
TC-101 C725977

The above services were performed in accordance with Herron Testing Laboratories' Quality Assurance Program Edition 1, Revision 2 dated 1/30/07. Information and statements in this report are derived from material, information and/or specifications furnished by the client and exclude any expressed or implied warranties as to the fitness of the material tested or analyzed for any particular purpose or use. This report is the confidential property of our client and may not be used for advertising purposes. This report shall not be reproduced except in full, without written approval of this laboratory. The recording of false, fictitious or fraudulent statements or entries on this document may be punished as a felony under Federal Statutes including Federal Law Title 18, Chapter 47.
Sample remnants are held for a minimum of 30 days following issuance of test results, at which point they will be discarded unless notified in writing by the client. This material was not contaminated by mercury or chlorinated solvents during the handling and processing at Stork-Herron Testing Laboratories facilities.

Michael R. Gaydos
General Manager, COO

60907

STATE OF CALIFORNIA-BUSINESS, TRANSPORTATION AND HOUSING AGENCY ARNOLD SCHWARZENEGGER, Governor

DEPARTMENT OF TRANSPORTATION - District 4 Toll Bridge Program
333 Burma Rd.
Oakland, CA 94607
(510) 622-5660, (510) 286-0550 fax

Flex your power
Be energy efficient!

July 14, 2008

Contract No. 04-0120F4
04-SF-80-13.2 / 13.9
Self-Anchored Suspension Bridge
Letter No. 05.03.01-002360

Michael Flowers
Project Executive
American Bridge/Fluor, A JV
375 Burma Road
Oakland, CA 94607

Dear Michael Flowers,

Quality Assurance Testing of Externally Threaded Fasteners

This letter is issued in response to renewed discussions at the Working Drawing Campus (WDC) and ABF-RFI-001233R04, concerning the Quality Assurance (QA) testing regimen of externally threaded fasteners, nuts and washers (fastener assemblies) for the SAS Project.

Initial discussions concerning the QA sampling requirements took place at the WDC in June 2007 and predominately concentrated on the QA sampling quantity for specialized and large diameter fastener assemblies used on the Cable System and the E2 Bearing and Shear Keys. A spreadsheet quantifying the sample size was provided at that time in draft format for discussion purposes only.

In addition, the Contractor was reminded at these meetings that QA testing of fastener assemblies will be performed pursuant to Standard Specification Section 6-1.01, "Source of Supply and Quality of Materials," and that the sample quantity, per heat, will be in accordance with Contract Special Provision Section 10-1.59, "Steel Structures," subsection "Bolted Connections," as shown below:

Lot Size (No. of Bolts)	Sample Size (No. of Bolts)
2 to 15	3
16 to 25	4
26 to 50	5
51 to 90	7
91 to 150	8
151 to 280	9
281 to 10,000	12
10,001 to 500,000	16
500,001 and over	20

The spreadsheet attached to this letter titled "*QA Sampling – Cable System/E2 Bearings & Shear Keys*," modifies the sample size provided above for some of the Cable System and E2 Bearing and Shear Key fastener assemblies. Please provide test samples in accordance with the attachment.

Please contact Brian Boal at (510) 622-5191 should you have any questions.

Sincerely,

GARY PURSELL
Resident Engineer

Attachment

cc: Rick Morrow
Brian Boal
Mark Woods
Gary Lai
Venkatesh Iyer
Ryan Smith
file: 05.03.01

QA Sampling - Cable System/E2 Bearings & Shear Keys

Description	Size	Material & Grade	Coating	Dwg Quantity Required	Spare Fasteners	Finished Item (Notes 10, 11, 12)	Material Only (Notes 10 & 13)	Comments
						Bolt/Rod quantities to be sent to Translab	Material sample quantities to be sent to Translab	
Cable Band Bolts	51mm dia x 610	A354 BC	HD Galv	1260	20	5	0	30 Bolts are required in addition to those listed in the table pe Section 10-1.60 "Cable System," for tensile testing & load extension curves
Cable Band Bolts	51mm dia x 710	A354 BC	HD Galv	48	T.B.D. by ABF	1	0	
Cable Band Anchor Rods	75mm dia x ###	A354 BD	HD Galv	24	T.B.D. by ABF	1	2	In all cases, three (3) samples per heat are required. At the Contractor's option, 3 full size finishe items may be furnished.
Tower Saddle Tie Rods	4" dia x ###	A354 BD	HD Galv	24	T.B.D. by ABF	1	2	In all cases, three (3) samples per heat are required. At the Contractor's option, 3 full size finishe items may be furnished.
East Saddle Tie Rods	3" dia x ***	A354 BD	HD Galv	18	T.B.D. by ABF	1	2	In all cases, three (3) samples per heat are required. At the Contractor's option, 3 full size finishe items may be furnished.
East Saddle Anchor Rods	50mm dia x ***	A354 BD	HD Galv	32	T.B.D. by ABF	1	2	In all cases, three (3) samples per heat are required. At the Contractor's option, 3 full size finishe items may be furnished.
West Deviation Saddle Tie Rods	1.75" dia x ***	A354 BC	HD Galv	42	T.B.D. by ABF	1	2	In all cases, three (3) samples per heat are required. At the Contractor's option, 3 full size finishe items may be furnished.
West Deviation Saddle Anchor Rods	50mm dia x ***	A354 BC	HD Galv	168	T.B.D. by ABF	1	2	In all cases, three (3) samples per heat are required. At the Contractor's option, 3 full size finishe items may be furnished.
Jacking Saddle Tie Rods	1.5" dia x ***	A354 BC	HD Galv	8	T.B.D. by ABF	1	2	In all cases, three (3) samples per heat are required. At the Contractor's option, 3 full size finishe items may be furnished.
Suspender Socket Anchor Rods - Type I	90mm dia x ***	A354 BC	HD Galv	352	T.B.D. by ABF	1	2	In all cases, three (3) samples per heat are required. At the Contractor's option, 3 full size finishe items may be furnished.
Suspender Socket Anchor Rods - Type II	100mm dia x ***	A354 BC	HD Galv	48	T.B.D. by ABF	1	2	In all cases, three (3) samples per heat are required. At the Contractor's option, 3 full size finishe items may be furnished.
Tower Suspender Anchor Rod	90mm dia x ***	A354 BC	HD Galv	16	T.B.D. by ABF	Included with Type I Suspender	Included with Type I Suspender	
E2 Shear Key	76mm dia x ***	A354 BD	HD Galv	192	T.B.D. by ABF	1	2	In all cases, three (3) samples per heat are required. At the Contractor's option, 3 full size finishe items may be furnished.
E2 Shear Key	76mm dia x ***	A354 BD	HD Galv	336	T.B.D. by ABF	1	2	In all cases, three (3) samples per heat are required. At the Contractor's option, 3 full size finishe items may be furnished.
E2 Bearing	76mm dia x ***	A354 BD	HD Galv	96	T.B.D. by ABF	1	2	In all cases, three (3) samples per heat are required. At the Contractor's option, 3 full size finishe items may be furnished.
E2 Bearing	50mm dia x ***	A354 BD	HD Galv	224	T.B.D. by ABF	1	2	In all cases, three (3) samples per heat are required. At the Contractor's option, 3 full size finishe items may be furnished.
Main Cable Anchor Rods	90mm dia x ###	A354 BD	HD Galv	274	T.B.D. by ABF	1	2	In all cases, three (3) samples per heat are required. At the Contractor's option, 3 full size finishe items may be furnished.

Notes/Legend:

1) Quantities for testing are per Lot. (Lot implies same diameter, length, heat, as well as heat treatment batch)
2) The number of samples indicated will be for Caltrans Lab testing.
3) Quantities listed do not take into account re-testing criteria due to failure
4) This list is NOT all inclusive. Items not listed are to follow the sampling size table in Section 10-1.59 "Steel Stuctures" of the Contract Special Provisions
5) ### = Fastener length varies; length to be determined by ABF's Means & Methods; *** = Fastener length to be determined by ABF's Means & Methods
6) A354 does not have metric equivalent. All Fastener diameters will be in imperial. Those shown in imperial were requested in RFI #278R0 & #281R1. Contract Plans - General Note allows for size substitution as clarified in RFI #65R0
7) ASTM A354 requires that the number of tests conform to ASTM F1470 and performed in accordance with ASTM F606
8) Number of tests/requirements for ASTM F1470 not shown
9) Quantities assume that no ROCAP testing required.
10) Quantities provided are ONLY applicable if manufacturer passes Department Audit
11) Finished Items shall be fabricated full-size; the Engineer will select one at random, and the fabricator may send to Trans Lab either this sample OR a 1200 mm length cut from a threaded end of the sample.
12) Each Finished Item sample shall include the same number of washers, nuts, or similar components that will accompany an item's field installation.
13) "Material Only" denotes a sample 300 mm in length (minimum) which need not be threaded; it shall be from the same rod stock/heat treatment lots as the finished product.

Attachment: State Letter 05.03.01-002360 - 14th July 2008

DATE 7/24/2008

THE ART GALVANIZING WKS., INC.

3935 VALLEY ROAD-CLEVELAND,OHIO 44109 PHONE 216-749-0020

PACKING SLIP/CERTIFICATIONS

TO DYSON CORP. PO# 60959

NOTE: THE FOLLOWING MATERIAL HAS BEEN HOT DIP GALVANIZED TO ASTM A 153 OR ASTM A 123 (LATEST REVISION) SPECIFICATION AS APPLICABLE. A COPY OF OF THE ABOVE PURCHASE ORDER IS AN INTERRAL PART OF THIS CERTIFICATION AND SHOULD BE ATTACHED.

3.00" HVY HEX SPH.NUT LTZ-13

S/O L98972

GALV WEIGHT	38
INCHES	OZ/SQ FT
0.0054	3.18
0.0056	3.29
0.0058	3.41
0.006	3.53
0.0062	3.65
AVG	3.41

3.00-4UNC-2A X 2000 MM ROD

HT#M644912

S/O L98971

GALV WEIGHT	308
INCHES	OZ/SQ FT
0.008	4.71
0.0084	4.94
0.0086	5.06
0.009	5.29
0.0082	4.82
AVG	4.96

GALV WEIGHT	
INCHES	OZ/SQ FT
0	0.00
0	0.00
0	0.00
0	0.00
0	0.00
AVG	0.00

GALV WEIGHT	
INCHES	OZ/SQ FT
0	0.00
0	0.00
0	0.00
0	0.00
0	0.00
AVG	0.00

GALV WEIGHT	
INCHES	OZ/SQ FT
0	0.00
0	0.00
0	0.00
0	0.00
0	0.00
AVG	0.00

GALV WEIGHT	
INCHES	OZ/SQ FT
0	0.00
0	0.00
0	0.00
0	0.00
0	0.00
AVG	0.00

GALV WEIGHT	
INCHES	OZ/SQ FT
0	0.00
0	0.00
0	0.00
0	0.00
0	0.00
AVG	0.00

GALV WEIGHT	
INCHES	OZ/SQ FT
0	0.00
0	0.00
0	0.00
0	0.00
0	0.00
AVG	0.00

GALV WEIGHT	
INCHES	OZ/SQ FT
0	0.00
0	0.00
0	0.00
0	0.00
0	0.00
AVG	0.00

M. Fa

DEPARTMENT OF TRANSPORTATION
DIVISION OF ENGINEERING SERVICES
Office of Structural Materials
Quality Assurance and Source Inspection

Bay Area Branch
690 Walnut Ave.St. 150
Vallejo, CA 94592-1133
(707) 649-5453
(707) 649-5493

Contract #: 04-0120F4
Cty: SF/ALA Rte: 80 PM: 13.2/13.9
File #: 11.8

COMPONENT MATERIAL INSPECTION REPORT

Resident Engineer: Pursell, Gary
Address: 333 Burma Road
City: Oakland, CA 94607

Report No: CMI-000015
Date Inspected: 18-Aug-2008

Contractor: American Bridge/Fluor Enterprises, a JV
Location: T. C. Industries Inc.
Bridge No.: 34-0006

OSM Arrival Time: 1430
OSM Departure Time: 1845
Component:# Anchor rod assemblies

The following material has been inspected in accordance with Section 6 of the Standard Specifications at the above location. At this point in the fabrication process it appears to comply with contract plans and specifications.

To be shipped to the following vendor or locations: Dyson Corporation Painesville Ohio

Lot #	Bid Item #	Quantity		Material Description
B70-007-08	61	14	ea	3” diameter rod x 17’-2”, long, Heat # M644914, Gr. A4140, lot # 60828
B70-007-08	61	14	ea	3” diameter rod x 17’-2”, long Heat # M644914, Gr. A4140 lot # 60829
B70-007-08	61	14	ea	3” diameter rod x 17’-2”, long Heat # M644914, Gr. A4140 lot # 60830
B70-007-08	61	14	ea	3” diameter rod x 17’-2”, long Heat # M644914, Gr. A4140 lot # 60831
B70-007-08	61	14	ea	3” diameter rod x 17’-2”, long Heat # M644914, Gr. A4140 lot # 60832
B70-007-08	61	12	ea	3” diameter rod x 24’-1”, long Heat # M644912, Gr. A4140 lot # 60827
B70-007-08	61	13	ea	3” diameter rod x 24’-1”, long Heat # M644912, Gr. A4140 lot # 60826

Identification: one green tag was attached to one of the 95 anchor rods

Summary of Items Observed:

On this date CALTRANS OSM Quality Assurance (QA) Inspector Ricardo Medina was present at T. C. Industries Inc. (TCI) in Crystal Lake Illinois for the release of anchor rod assemblies to be shipped to Dyson Corporation located in Painesville Ohio. While at the facility the QA Inspector observed the following:

Prior to arrival the QA Inspector was notified by the Structures Material Representative (SMR) Jinesh Mehta that T. C. Industries Inc. (TCI) had failed to follow the project specifications, Quality Control (QC) in-process tracking system for traceability and lot number assignments were not in compliance. Jinesh Mehta requested the QA Inspector to verify TCI follow the specification requirements including proper material identification. Jinesh Mehta notified the QA Inspector the material was heat treated for the second time to resolve the above mentioned non-conformance issue.

At the time of arrival the QA Inspector met with TCI Quality Control Manager (QCM) Mark Walter which provided to QA Inspector with material documentation including Mill Test Reports (MTR), Certificate of Compliance (COC) and Hardness Test reports for review and verification. The QA Inspector reviewed material's documentation and performed a random visual verification of the heat treated material. The documentation and visual verification of the material listed above appeared to be in general compliance with the project plans and specifications. TCI QCM Mark Walter notified the QA Inspector the mechanical testing has already been completed at Dyson Corporation for these lots but the test results have not been submitted back to TC Industries. The QA Inspector notified SMR Jinesh Mehta of the observations and verification performed at this location. The QA Inspector attached a green tag to material and assigned a Caltrans lot number (B70-007-08) for tracking purposes.

Summary of Conversations:

As noted within the body of the report above.

Comments

This report is for the purpose of determining conformance with the contract documents and is not for the purpose of making repair or fit for purpose recommendations. Should you require recommendations concerning repairs or remedial efforts please contact Ryan Smith, (858) 232-6799, who represents the Office of Structural Materials for your project.

Inspected By:	Medina, Ricardo	Quality Assurance Inspector
Reviewed By:	Levell, Bill	QA Reviewer

TC Industries Test Center
3703 South Route 31
Crystal Lake, IL 60012-1412
Telephone 815/459/2400 Fax 815/459/3419

ACCREDITED
Certificate No. 1281-01

TEST REPORT

REPORT NO: 141218
DATE: August 18, 2008

TO: The Dyson Corp
53 Freedom Road
Painesville, OH 44077

SHIP TO:

DESC: 13	PCS 3"RD x 24'1" Code MIS PO: 59927		HEAT: M644912 MO: N/A	GRADE: A4140 CO: 59927	WT: 7552 LOT: 60826
SPEC:	Quench, Temper, Straighten and Stress Relieve Heat Treated to Meet Hardness Requirements of ASTM A354-BD-07				
PROCESS:	FURNACE TEMP: 1600 TEMPER TEMP: 1025 STRESS TEMP: 925		FURNACE TIME hh.mm: 2:00 TEMPER TIME hh.mm: 3:00 STRESS TIME hh.mm: 3:00	QUENCH: Oil	

PARAMETER	UNITS	LIMITS	TEST RESULTS	*(See notes at bottom of page)*
SURFACE HB	HBW	293 363	352\ 363	

ASTM test Methods and
TC Industries/A2LA Subcontracted Labs Used

Tensile, Standard Tensile, Full Secn Charpy V 10mmx10mm Microhardness,Knoop	Rockwell Brinell TC Leeb Macroetch	Micro Analysis Decarb Measure Chemistry
TC:TC Ind Test Center #1281-01 Expires 2/28/09	SS: Staveley Services #0286-01 Expires 06/30/08	MSI: Metallurgical Services #0510-01 Expires 12/31/08

**Not included in our scope of accreditation*

TIME:
DATE IN:
FC 4.12.16 F 6/20/08

Mark Walter
QA Manager

There are no deviations from test methods unless noted. It should not be assumed that mechanical properties of raw material heat treated to a fastener standard will have the same properties of a finished fastener whose original material characteristics may have been significantly altered.

No mercury was used/added and no welding/weld repair was performed on this material while in the possession of TC Industries, Inc.

This original test report displays a raised "TC Industries Test Center" seal. This test report relates only to the items tested and shall not be reproduced, except in full, without the written permission of TC Industries Test Center

TC Industries Test Center
3703 South Route 31
Crystal Lake, IL 60012-1412
Telephone 815/459/2400 Fax 815/459/3419

ACCREDITED
Certificate No. 1281-01

TEST REPORT

REPORT NO: 141219
DATE: August 18, 2008

TO: The Dyson Corp
53 Freedom Road
Painesville, OH 44077

SHIP TO:

DESC: 12	PCS Code MIS	3"RD x 24'1" PO: 59927	HEAT: M644912 MO: N/A	GRADE: A4140 CO: 59927	WT: 6971 LOT: 60827
SPEC:	Quench, Temper, Straighten and Stress Relieve Heat Treated to Meet Hardness Requirements of ASTM A354-BD-07				
PROCESS:	FURNACE TEMP: 1600 TEMPER TEMP: 1025 STRESS TEMP: 925		FURNACE TIME hh.mm: 2:00 TEMPER TIME hh.mm: 3:00 STRESS TIME hh.mm: 3:00	QUENCH: Oil	

PARAMETER	UNITS	LIMITS		TEST RESULTS	
SURFACE HB	HBW	293	363	331	363

(See notes at bottom of page)

ASTM test Methods and
TC Industries/A2LA Subcontracted Labs Used

Tensile, Standard Tensile, Full Secn Charpy V 10mmx10mm Microhardness,Knoop	Rockwell Brinell TC Leeb Macroetch	Micro Analysis Decarb Measure Chemistry
TC:TC Ind Test Center #1281-01 Expires 2/28/09	SS: Staveley Services #0286-01 Expires 06/30/08	MSI: Metallurgical Services #0510-01 Expires 12/31/08

**Not included in our scope of accreditation*

TIME:
DATE IN:
FC 4.12.16 F 6/20/08

Mark Walter
QA Manager

TEST REPORT WITH SHIPMENT

There are no deviations from test methods unless noted. It should not be assumed that mechanical properties of raw material heat treated to a fastener standard will have the same properties of a finished fastener whose original material characteristics may have been significantly altered.

No mercury was used/added and no welding/weld repair was performed on this material while in the possession of TC Industries, Inc.

This original test report displays a raised "TC Industries Test Center" seal. This test report relates only to the items tested and shall not be reproduced, except in full, without the written permission of TC Industries Test Center

TC Industries Test Center
3703 South Route 31
Crystal Lake, IL 60012-1412
Telephone 815/459/2400 Fax 815/459/3419

A2LA ACCREDITED
Certificate No. 1281-01

TEST REPORT
REPORT NO: 141220
DATE: August 18, 2008
PAGE 1 OF 1

TO: The Dyson Corp
53 Freedom Road
Painesville, OH 44077

SHIP TO:

DESC: 14 PCS 3"RD x 17'2" Code:MJF PO: 59927			HEAT: M644914 MO: 8051062-01	GRADE: A4140 CO: 59895-01	WT: 5892 LOT: 60828
SPEC:	Quench, Temper, Straighten and Stress Relieve Heat Treated to Meet Hardness Requirements of ASTM A354-BD-07				
PROCESS:	FURNACE TEMP: 1600 TEMPER TEMP: 1025 STRESS TEMP: 925		FURNACE TIME hh.mm: 2:00 TEMPER TIME hh.mm: 3:00 STRESS TIME hh.mm: 3:00	QUENCH: Oil	
PARAMETER	UNITS	LIMITS	TEST RESULTS	*(See notes at bottom of page)*	
SURFACE HB	HBW	293 363	363 363		

ASTM test Methods and
TC Industries/A2LA Subcontracted Labs Used

Tensile, Standard Tensile, Full Secn Charpy V 10mmx10mm Microhardness,Knoop	Rockwell Brinell TC Leeb Macroetch	Micro Analysis Decarb Measure Chemistry
TC:TC Ind Test Center #1281-01 Expires 2/28/09	SS: Staveley Services #0286-01 Expires 06/30/08	MSI: Metallurgical Services #0510-01 Expires 12/31/08

**Not included in our scope of accreditation*

TIME:
DATE IN:
FC 4.12.16 F 6/20/08

Mark Walter
Mark Walter
QA Manager

CALTRANS LOT #
570-007-08
RICARDO MEDINA
8-18-08.

There are no deviations from test methods unless noted. It should not be assumed that mechanical properties of raw material heat treated to a fastener standard will have the same properties of a finished fastener whose original material characteristics may have been significantly altered.

No mercury was used/added and no welding/weld repair was performed on this material while in the possession of TC Industries, Inc.

This original test report displays a raised "TC Industries Test Center" seal. This test report relates only to the items tested and shall not be reproduced, except in full, without the written permission of TC Industries Test Center

TC Industries Test Center
3703 South Route 31
Crystal Lake, IL 60012-1412
Telephone 815/459/2400 Fax 815/459/3419

ACCREDITED
Certificate No. 1281-01

TEST REPORT

REPORT NO: 141221
DATE: August 18, 2008

TO: The Dyson Corp
53 Freedom Road
Painesville, OH 44077

SHIP TO:

DESC:	14 PCS Code MJF	3"RD x 17'2" PO: 59927	HEAT: M644914 MO: 8051062-01	GRADE: A4140 CO: 59895-01	WT: 5892 LOT: 60829
SPEC:	Quench, Temper, Straighten and Stress Relieve Heat Treated to Meet Hardness Requirements of ASTM A354-BD-07				
PROCESS:	FURNACE TEMP: 1600 TEMPER TEMP: 1025 STRESS TEMP: 925		FURNACE TIME hh.mm: 2:00 TEMPER TIME hh.mm: 3:00 STRESS TIME hh.mm: 3:00	QUENCH: Oil	

PARAMETER	UNITS	LIMITS		TEST RESULTS	
SURFACE HB	HBW	293	363	363	363

(See notes at bottom of page)

ASTM test Methods and
TC Industries/A2LA Subcontracted Labs Used

Tensile, Standard Tensile, Full Secn Charpy V 10mmx10mm Microhardness,Knoop	Rockwell Brinell TC Leeb Macroetch	Micro Analysis Decarb Measure Chemistry
TC:TC Ind Test Center #1281-01 Expires 2/28/09	SS: Staveley Services #0286-01 Expires 06/30/08	MSI: Metallurgical Services #0510-01 Expires 12/31/08

**Not included in our scope of accreditation*

TIME:
DATE IN:
FC 4.12.16 F 6/20/08

Mark Walter
QA Manager

There are no deviations from test methods unless noted. It should not be assumed that mechanical properties of raw material heat treated to a fastener standard will have the same properties of a finished fastener whose original material characteristics may have been significantly altered.

No mercury was used/added and no welding/weld repair was performed on this material while in the possession of TC Industries, Inc.

This original test report displays a raised "TC Industries Test Center" seal. This test report relates only to the items tested and shall not be reproduced, except in full, without the written permission of TC Industries Test Center

TC Industries Test Center
3703 South Route 31
Crystal Lake, IL 60012-1412
Telephone 815/459/2400 Fax 815/459/3419

ACCREDITED
Certificate No. 1281-01

TEST REPORT

REPORT NO: 141222
DATE: August 18, 2008

TO: The Dyson Corp
53 Freedom Road
Painesville, OH 44077

SHIP TO:

DESC: 14	PCS 3"RD x 17'2" Code MJF PO: 59927		HEAT: M644914 MO: 8051062-01	GRADE: A4140 CO: 59895-01	WT: 5892 LOT: 60830
SPEC:	Quench, Temper, Straighten and Stress Relieve Heat Treated to Meet Hardness Requirements of ASTM A354-BD-07				
PROCESS:	FURNACE TEMP: 1600 TEMPER TEMP: 1025 STRESS TEMP: 925		FURNACE TIME hh.mm: 2:00 TEMPER TIME hh.mm: 3:00 STRESS TIME hh.mm: 3:00	QUENCH: Oil	

PARAMETER	UNITS	LIMITS		TEST RESULTS		*(See notes at bottom of page)*
SURFACE HB	HBW	293	363	341	363	

ASTM test Methods and
TC Industries/A2LA Subcontracted Labs Used

Tensile, Standard Tensile, Full Secn Charpy V 10mmx10mm Microhardness,Knoop	Rockwell Brinell TC Leeb Macroetch	Micro Analysis Decarb Measure Chemistry
TC:TC Ind Test Center #1281-01 Expires 2/28/09	SS: Staveley Services #0286-01 Expires 06/30/08	MSI: Metallurgical Services #0510-01 Expires 12/31/08

**Not included in our scope of accreditation*

TIME:
DATE IN:
FC 4.12.16 F 6/20/08

Mark Walter
QA Manager

There are no deviations from test methods unless noted. It should not be assumed that mechanical properties of raw material heat treated to a fastener standard will have the same properties of a finished fastener whose original material characteristics may have been significantly altered.

No mercury was used/added and no welding/weld repair was performed on this material while in the possession of TC Industries, Inc.

This original test report displays a raised "TC Industries Test Center" seal. This test report relates only to the items tested and shall not be reproduced, except in full, without the written permission of TC Industries Test Center

TC Industries Test Center
3703 South Route 31
Crystal Lake, IL 60012-1412
Telephone 815/459/2400 Fax 815/459/3419

ACCREDITED
Certificate No. 1281-01

TEST REPORT

REPORT NO: 141223
DATE: August 18, 2008

TO: The Dyson Corp
53 Freedom Road
Painesville, OH 44077

SHIP TO:

DESC: 14	PCS 3"RD x 17'2" Code MJF PO: 59927		HEAT: M644914 MO: 8051062-01	GRADE: A4140 CO: 59895-01	WT: 5892 LOT: 60831
SPEC:	Quench, Temper, Straighten and Stress Relieve Heat Treated to Meet Hardness Requirements of ASTM A354-BD-07				
PROCESS:	FURNACE TEMP: 1600 TEMPER TEMP: 1025 STRESS TEMP: 925		FURNACE TIME hh.mm: 2:00 TEMPER TIME hh.mm: 3:00 STRESS TIME hh.mm: 3:00	QUENCH: Oil	

PARAMETER	UNITS	LIMITS	TEST RESULTS	*(See notes at bottom of page)*
SURFACE HB	HBW	293 363	341 352	

ASTM test Methods and TC Industries/A2LA Subcontracted Labs Used		
Tensile, Standard Tensile, Full Secn Charpy V 10mmx10mm Microhardness,Knoop	Rockwell Brinell TC Leeb Macroetch	Micro Analysis Decarb Measure Chemistry
TC:TC Ind Test Center #1281-01 Expires 2/28/09	SS: Staveley Services #0286-01 Expires 06/30/08	MSI: Metallurgical Services #0510-01 Expires 12/31/08

**Not included in our scope of accreditation*

TIME:
DATE IN:
FC 4.12.16 F 6/20/08

Mark Walter
QA Manager

There are no deviations from test methods unless noted. It should not be assumed that mechanical properties of raw material heat treated to a fastener standard will have the same properties of a finished fastener whose original material characteristics may have been significantly altered.

No mercury was used/added and no welding/weld repair was performed on this material while in the possession of TC Industries, Inc.

This original test report displays a raised "TC Industries Test Center" seal. This test report relates only to the items tested and shall not be reproduced, except in full, without the written permission of TC Industries Test Center

TC Industries Test Center
3703 South Route 31
Crystal Lake, IL 60012-1412
Telephone 815/459/2400 Fax 815/459/3419

ACCREDITED
Certificate No. 1281-01

TEST REPORT

REPORT NO: 141224
DATE: August 18, 2008

TO: The Dyson Corp
53 Freedom Road
Painesville, OH 44077

SHIP TO:

DESC: 14	PCS 3"RD x 17'2" Code MJF PO: 59927		HEAT: M644914 MO: 8051062-01	GRADE: A4140 CO: 59895-01	WT: 5892 LOT: 60832
SPEC:	Quench, Temper, Straighten and Stress Relieve Heat Treated to Meet Hardness Requirements of ASTM A354-BD-07				
PROCESS:	FURNACE TEMP: 1600 TEMPER TEMP: 1025 STRESS TEMP: 925		FURNACE TIME hh.mm: 2:00 TEMPER TIME hh.mm: 3:00 STRESS TIME hh.mm: 3:00	QUENCH: Oil	

PARAMETER	UNITS	LIMITS*		TEST RESULTS		*(See notes at bottom of page)*
SURFACE HB	HBW	293	363	363	363	

ASTM test Methods and
TC Industries/A2LA Subcontracted Labs Used

Tensile, Standard Tensile, Full Secn Charpy V 10mmx10mm Microhardness,Knoop	Rockwell Brinell TC Leeb Macroetch	Micro Analysis Decarb Measure Chemistry
TC:TC Ind Test Center #1281-01 Expires 2/28/09	SS: Staveley Services #0286-01 Expires 06/30/08	MSI: Metallurgical Services #0510-01 Expires 12/31/08

**Not included in our scope of accreditation*

TIME:
DATE IN:
FC 4.12.16 F 6/20/08

Mark Walter
QA Manager

There are no deviations from test methods unless noted. It should not be assumed that mechanical properties of raw material heat treated to a fastener standard will have the same properties of a finished fastener whose original material characteristics may have been significantly altered.

No mercury was used/added and no welding/weld repair was performed on this material while in the possession of TC Industries, Inc.

This original test report displays a raised "TC Industries Test Center" seal. This test report relates only to the items tested and shall not be reproduced, except in full, without the written permission of TC Industries Test Center

TTML Results Averages (shipped from TC on 08/20/08, after heat treatment)							
			Tensile, ksi	**Yield .2% ksi**	**Elongation % in 4D**	**Red. Of Area, %**	**Core Hardness**
	Required		140	115	14	40	
	Heat #	Ref. WO ID#					
MIS	M644912	60826-1	163	142	14	50	37
MIS	M644912	60826-1	162	140	14	49	36
MIS	M644912	60827-1	171	149	14	48	38
MIS	M644912	60827-1	161	142	15	48	38
MJF	M644914	60828-1	162	134	14	49	35
MJF	M644914	60828-1	166	151	14	48	36
MJF	M644914	60829-1	161	140	14	50	36
MJF	M644914	60829-1	162	138	14	50	37
MJF	M644914	60830-1	171	153	14	49	36
MJF	M644914	60830-1	162	140	14	48	35
MJF	M644914	60831-1	169	148	14	46	35
MJF	M644914	60831-1	165	146	14	47	35
MJF	M644914	60832-1	159	137	15	48	35
MJF	M644914	60832-1	162	143	14	46	35
AVERAGE							
MIS	M644912		164.25	143.25	14.25	48.75	37.25
MJF	M644914		163.9	143	14.1	48.1	35.5

TTML TENSILE TESTING METALLURGICAL LABORATORY

A DIVISION OF J.T. ADAMS CO., INC.
4520 WILLOW PARKWAY
CLEVELAND, OHIO 44125
PHONE (216) 641-3290
FAX (216) 641-1223
www.tensile.com.

CERTIFIED TEST REPORT

Dyson Corporation
53 Freedom Road
Painesville OH 44077

Job No.: A8-232-736
Date: 8-20-08
Cust. PO#: 61470

Description: 5 samples 3" Dia. Specimen from each 6" Lg. test Pc.
SO# L97914 Cust PO# 660110-SA-017 CO7 Code# MIS
Ref. WO ID# 60826-1

Material: AISI 4140 Heat# M644912

Spec: ASTM-A354-07 GR. BD

TEST RESULTS

	Tensile, ksi	Yield, .2% ksi	Elong., % in 4D	Red. of Area, %	Core Hardness
Req. (Min.):	140	115	14	40	HRC
	163	142	14	50	37
	162	140	14	49	36
					37

Test Method: ASTM A370-08a

The above **conforms** to specifications listed.

This material tested in accordance with the Tensile Testing's Quality System Manual dated 2/15/07 Rev. D as audited and approved by Dyson. The reported results represent the actual attributes of the material tested and indicate full compliance with all applicable specification and contract requirements. We certify that the foregoing is a true copy of the data resulting from tests performed in the laboratory.

Tracey A. Waugaman
Authorized Signature
Tracey A. Waugaman, Lab Manager

ACCREDITED Cert No. 0101

This Report May Not Be Reproduced Except In Full
This report represents Tensile Testing interpretation of the results obtained from the test and is not to be construed as a Guaranty or Warranty of the condition of the materials tested. Tensile Testing shall not be held liable for misinterpretation of conditions, loss, damage, injury or death arising from or attributable to delay preceding a test or subsequent to performance of a test.

TTML TENSILE TESTING METALLURGICAL LABORATORY

A DIVISION OF J.T. ADAMS CO., INC.
4520 WILLOW PARKWAY
CLEVELAND, OHIO 44125
PHONE (216) 641-3290
FAX (216) 641-1223
www.tensile.com

CERTIFIED TEST REPORT

Dyson Corporation
53 Freedom Road
Painesville OH 44077

Job No.: A8-232-737
Date: 8-20-08
Cust. PO#: 61471

Description: 5 samples 3" Dia.
SO# L97914 Cust PO# 660110-SA-017 CO7 Code# MIS
Ref. WO ID# 60827-1

Material: AISI 4140 Heat# M644912

Spec: ASTM A354-07 GR. BD

TEST RESULTS

	Tensile, ksi	Yield, .2% ksi	Elong., % in 4D	Red. of Area, %	Core Hardness
Req. (Min.):	140	115	14	40	HRC
	171	149	14	48	37
	161	142	15	48	38
					38

Test Method: ASTM A370-08a

The above **conforms** to specifications listed.

This material tested in accordance with the Tensile Testing's Quality System Manual dated 2/15/07 Rev. D as audited and approved by Dyson. The reported results represent the actual attributes of the material tested and indicate full compliance with all applicable specification and contract requirements. We certify that the foregoing is a true copy of the data resulting from tests performed in the laboratory.

Tracey A. Waugaman
Authorized Signature

Tracey A. Waugaman, Lab Manager

ACCREDITED Cert No. 0161

This Report May Not Be Reproduced Except In Full

This report represents Tensile Testing interpretation of the results obtained from the test and is not to be construed as a Guaranty or Warranty of the condition of the materials tested. Tensile Testing shall not be held liable for misinterpretation of conditions, loss, damage, injury or death arising from or attributable to delay preceding a test or subsequent to performance of a test.

TTML TENSILE TESTING
METALLURGICAL LABORATORY

A DIVISION OF J.T. ADAMS CO., INC.
4520 WILLOW PARKWAY
CLEVELAND, OHIO 44125
PHONE (216) 641-3290
FAX (216) 641-1223
www.tensile.com

CERTIFIED TEST REPORT

Dyson Corporation
53 Freedom Road
Painesville OH 44077

Job No.: A8-232-738
Date: 8-20-08
Cust. PO#: 61472

Description: 5 samples 3" Dia. Specimen from each 6" Lg. test Pc.
SO# L97913 Cust PO# 660110-SA-017 CO7 Code# MJF
Ref. WO ID# 60828-1

Material: AISI 4140 Heat# M644914

Spec: ASTM-A354-07 GR. BD

TEST RESULTS

	Tensile, ksi	Yield, .2% ksi	Elong., % in 4D	Red. Of Area, %		Core Hardness
Req. (Min.):	140	115	14	40		HRC
	162	134	14	49	1	36
	166	151	14	48	2	35
					3	36

Test Method: ASTM A370-08a

The above **Conforms** to specifications listed.

This material tested in accordance with the Tensile Testing's Quality System Manual dated 2/15/07 Rev. D as audited and approved by Dyson. The reported results represent the actual attributes of the material tested and indicate full compliance with all applicable specification and contract requirements. We certify that the foregoing is a true copy of the data resulting from tests performed in the laboratory.

Authorized Signature

Timothy J. Adams, President

ACCREDITED Cert No. 0161

This Report May Not Be Reproduced Except In Full
This report represents Tensile Testing interpretation of the results obtained from the test and is not to be construed as a Guaranty or Warranty of the condition of the materials tested. Tensile Testing shall not be held liable for misinterpretation of conditions, loss, damage, injury or death arising from or attributable to delay preceding a test or subsequent to performance of a test.

TTML TENSILE TESTING
METALLURGICAL LABORATORY

A DIVISION OF J.T. ADAMS CO., INC.
4520 WILLOW PARKWAY
CLEVELAND, OHIO 44125
PHONE (216) 641-3290
FAX (216) 641-1223
www.tensile.com

CERTIFIED TEST REPORT

Dyson Corporation
53 Freedom Road
Painesville OH 44077

Job No.: A8-232-739
Date: 8-20-08
Cust. PO#: 61473

Description: 5 samples 3" Dia. Specimen from each 6" Lg. test Pc.
SO# L97913 Cust PO# 660110-SA-017 CO7 Code# MJF
Ref. WO ID# 60829-1

Material: AISI 4140 Heat# M644914

Spec: ASTM-A354-07 GR. BD

TEST RESULTS

	Tensile, ksi	Yield, .2% ksi	Elong., % in 4D	Red. of Area, %		Core Hardness HRC
Req. (Min.):	140	115	14	40		
	161	140	14	50	1	37
	162	138	14	50	2	36
					3	37

Test Method: ASTM A370-08a

The above **Conforms** to specifications listed.

This material tested in accordance with the Tensile Testing's Quality System Manual dated 2/15/07 Rev. D as audited and approved by Dyson. The reported results represent the actual attributes of the material tested and indicate full compliance with all applicable specification and contract requirements. We certify that the foregoing is a true copy of the data resulting from tests performed in the laboratory.

Timothy J. Adams

Authorized Signature

Timothy J. Adams, President

ACCREDITED
Cert No. 0161

This Report May Not Be Reproduced Except In Full
This report represents Tensile Testing interpretation of the results obtained from the test and is not to be construed as a Guaranty or Warranty of the condition of the materials tested. Tensile Testing shall not be held liable for misinterpretation of conditions, loss, damage, injury or death arising from or attributable to delay preceding a test or subsequent to performance of a test.

TTML TENSILE TESTING
METALLURGICAL LABORATORY

A DIVISION OF J.T. ADAMS CO., INC.
4520 WILLOW PARKWAY
CLEVELAND, OHIO 44125
PHONE (216) 641-3290
FAX (216) 641-1223
www.tensile.com

CERTIFIED TEST REPORT

Dyson Corporation
53 Freedom Road
Painesville OH 44077

Job No.: A8-232-740
Date: 8-20-08
Cust. PO#: 61474

Description: 5 samples 3" Dia.
SO# L97913 Cust PO# 660110-SA-017 CO7 Code# MJF
Ref. WO ID# 60830-1

Material: AISI 4140 Heat# M644914

Spec: ASTM A354-07 GR. BD

TEST RESULTS

	Tensile, ksi	Yield, .2% ksi	Elong., % in 4D	Red. of Area, %	Core Hardness
Req. (Min.):	140	115	14	40	HRC
	171	153	14	49	35
	162	140	14	48	36
					35

Test Method: ASTM A370-08a

The above **conforms** to specifications listed.

This material tested in accordance with the Tensile Testing's Quality System Manual dated 2/15/07 Rev. D as audited and approved by Dyson. The reported results represent the actual attributes of the material tested and indicate full compliance with all applicable specification and contract requirements. We certify that the foregoing is a true copy of the data resulting from tests performed in the laboratory.

Tracey Waugaman
Authorized Signature
Tracey A. Waugaman, Lab Manager

ACCREDITED
Cert No. 0161

This Report May Not Be Reproduced Except In Full
This report represents Tensile Testing interpretation of the results obtained from the test and is not to be construed as a Guaranty or Warranty of the condition of the materials tested. Tensile Testing shall not be held liable for misinterpretation of conditions, loss, damage, injury or death arising from or attributable to delay preceding a test or subsequent to performance of a test.

TTML TENSILE TESTING METALLURGICAL LABORATORY

A DIVISION OF J.T. ADAMS CO., INC.
4520 WILLOW PARKWAY
CLEVELAND, OHIO 44125
PHONE (216) 641-3290
FAX (216) 641-1223
www.tensile.com

CERTIFIED TEST REPORT

Dyson Corporation
53 Freedom Road
Painesville OH 44077

Job No.: A8-232-741
Date: 8-22-08
Cust. PO#: 61475

Description: 5 samples 3" Dia.
SO# L97913 Cust PO# 660110-SA-017 CO7 Code# MJF
Ref. WO ID# 60831-1

Material: AISI 4140 Heat# M644914

Spec: ASTM A354-07 GR. BD

TEST RESULTS

	Tensile, ksi	Yield, .2% ksi	Elong., % in 4D	Red. of Area, %	Core Hardness
Requirements (Min.):	140	115	14	40	HRC
	169	148	14	46	35
	165	146	14	47	35
					35

Test Method: ASTM A370-08a

The above **conforms** to specifications listed.

This material tested in accordance with the Tensile Testing's Quality System Manual dated 2/15/07 Rev. D as audited and approved by Dyson. The reported results represent the actual attributes of the material tested and indicate full compliance with all applicable specification and contract requirements. We certify that the foregoing is a true copy of the data resulting from tests performed in the laboratory.

Tracey A. Waugaman
Authorized Signature
Tracey A. Waugaman, Lab Manager

ACCREDITED Cert No. 0101

This Report May Not Be Reproduced Except In Full
This report represents Tensile Testing interpretation of the results obtained from the test and is not to be construed as a Guaranty or Warranty of the condition of the materials tested. Tensile Testing shall not be held liable for misinterpretation of conditions, loss, damage, injury or death arising from or attributable to delay preceding a test or subsequent to performance of a test.

TTML TENSILE TESTING /METALLURGICAL LABORATORY

A DIVISION OF J.T. ADAMS CO., INC.
4520 WILLOW PARKWAY
CLEVELAND, OHIO 44125
PHONE (216) 641-3290
FAX (216) 641-1223
www.tensile.com

CERTIFIED TEST REPORT

Dyson Corporation
53 Freedom Road
Painesville OH 44077

Job No.: A8-232-742
Date: 8-20-08
Cust. PO#: 61476

Description: 5 samples 3" Dia. Specimen from each 6" Lg. test Pc.
SO# L97913 Cust PO# 660110-SA-017 CO7 Code# MJF
Ref. WO ID# 60832-1

Material: AISI 4140 Heat# M644914

Spec: ASTM-A354-07 GR. BD

TEST RESULTS

	Tensile, ksi	Yield, .2% ksi	Elong., % in 4D	Red. of Area, %		Core Hardness HRC
Req. (Min.):	140	115	14	40		
	159	137	15	48	1	35
	162	143	14	46	2	35
					3	35

Test Method: ASTM A370-08a

The above **conforms** to specifications listed.

This material tested in accordance with the Tensile Testing's Quality System Manual dated 2/15/07 Rev. D has audited and approved by Dyson. The reported results represent the actual attributes of the material tested and indicate full compliance with all applicable specification and contract requirements. We certify that the foregoing is a true copy of the data resulting from tests performed in the laboratory.

Authorized Signature

Timothy J. Adams, President

ACCREDITED Cert No. 0161

This Report May Not Be Reproduced Except In Full
This report represents Tensile Testing interpretation of the results obtained from the test and is not to be construed as a Guaranty or Warranty of the condition of the materials tested. Tensile Testing shall not be held liable for misinterpretation of conditions, loss, damage, injury or death arising from or attributable to delay preceding a test or subsequent to performance of a test.

State of California
Department of Transportation

Structural Materials Testing Laboratory
5900 Folsom Boulevard, Sacramento, CA 95819

TEST REPORT

ACCREDITED
CERTIFICATE NO. 2364.01

Remarks ref: A354, A709, A514, A563, A153, TM03; Bolt Lot #MIS2, Plate Lot #MIV, Washer Lot #MIW, Nut Lot #LTZ13.

Sample No: SM-08-1088
Date Sampled: 08/14/08 **Date Rec'd:** 08/20/08 **Date Reported:** 08/26/08
Lot No: B8700708 **TL-101 / SIC No:** C725977
Contract No: 04-0120F4
Material: A354 3" Anchor Rod w/ Bearing Plate & Spherical Washers & Nuts
Manufacturer: Dyson
Sampler: Scott Croff

Results: SAMPLES SUBMITTED ARE SATISFACTORY FOR USE

SOURCE	CHARGE	E.A.	SUB JOB	SPECIAL DESIGNATION	OBJECT
59318	04	0120F3			1270

8/20

STATE OF CALIFORNIA • DEPARTMENT OF TRANSPORTATION
SAMPLE IDENTIFICATION CARD CARD NUMBER
TL-0101 (REV. 10/97) 08-1088 C725977

☐ PRELIMINARY TESTS
☐ PROCESS TESTS
☒ ACCEPTANCE TESTS
INDEPENDENT ASSURANCE TESTS
☐ DIST. LAB
☐ TRANS. LAB
☐ SPECIAL TESTS

SAMPLE SENT TO:
☐ HDQTRS. LAB
☐ BRANCH LAB
☐ DIST. LAB

FIELD NO.
DIST. LAB NO.
LOT NO. B87-007-08
SHIPMENT NO. P.O. OR REQ. NO.
AUTHORIZATION NO.

SAMPLE OF Rod Assemblies 3'dia. 2 meter length w/ washers
FOR USE IN F2 Bridge & Shear Key Anchor Rod Assemblies
SAMPLE FROM Supplier = DYSON, Ohio
DEPTH n/a
LOCATION OF SOURCE n/a
THIS SAMPLE IS SHIPPED IN (NO. CONTAINERS) 1 AND IS ON E OF A GROUP OF 1 SAMPLES REPRESENTING (TONS, GALS, BBLS, STA. ETC.)
OWNER-OR MANUFACTURER Dyson Corporation
TOTAL QUANTITY AVAILABLE 2
TEST RESULTS DESIRED ☒ NORMAL ☐ PRIORITY DATE NEEDED
REMARKS 2 assemblies each = 1 3"x2M A354 rod 2 A563 DH nuts 2 A709 50 plates. 4 washers
per ABF RFI-001232 R.04

COVER ADDITIONAL INFORMATION WITH LETTER
DATE SAMPLEED August 14, 2008
BY Scott Croff - B87 TITLE QA Inspector
DIST. CO. RTE. PM 04 SF/ALA 80 13.2/13.9
LIMITS
CONT. NO. 04-0120F4
FED. NO.
RES. ENGR. OR SUPT. Gary Purcell
ADDRESS 333 Burma Rd. Oakland CA 94607
CONTRACTOR ABF Inc.

ENCLOSE WITH SAMPLE

Print

A354 BD Rod Threaded Ends

Department of Transportation
Structural Materials Testing Laboratory

SM Number = 08-1088

Sample	Area	Peak Load	Load at Offset	Peak Stress	Stress at Offset	Comments	Tested By
	(in²)	(lbf)	(lbf)	(lbf)	(psi)		
1A	5.97	923940	337553	INVALID TEST	56542	bar broke; necking okay	EMccrory
1B	5.97	921160	892526		149502	bar broke; necking okay	EMccrory

STRUCTURAL MATERIALS TESTING LABORATORY
FORM TM-3 (REV. 2/05)

FASTENER ASSEMBLY WORKSHEET

APPROVED FOR USE BY SMTL QUALITY MANAGER:

SM Number 08-1088 Lot Number 68700708 Page 1 of ____

Contract 04-0120F4 TL-0101 Number 0725977 Date Rec'd. 8/20/08 Date Tested: 8/21/08

Bolts: A 354 BD HDG. Lab Technician: BRUCE

Sample No.	1A	1B								
Mfg. Lot No.	MIS 2	—								
Product Markings										
Size	3"	—								
Pitch Diameter										
Bolt Length	6'-7"	—								
Ring Gages/Go Nogo	2.858 2.874	2.844 2.840	— PITCH DIA.							
Zinc Coating Thick.	10.5	5.43								
Hardness (Rc) / Rb	36.97	—								
Wedge Tensile		—								

Nuts: ~~A 564~~ A 563 HDG

Sample No.	1A	1B	1C	1D						
Mfg. Lot No.	~~MIW~~ LTZ13	—	—	—						
Product Markings	LTZ13 BLUE DYED H	—	—	—						
Size	3"	—	—	—						
Go / No-Go										
Zinc Coating	3.34	3.38	3.56	6.44						
Hardness (Rc) / Rb	20.15 19.10 GW	23.80 20.50 GW	—	—						
Nut Proof Load	—	—	—	—						

Washer: A 514 A 709 GR. 50 BEARING PLATE

Sample No.	1A	1B	1C	1D			2A	2B	2C	2D
Mfg. Lot No.	MIW	—	—	—			MIV	—	—	—
Product Markings										
Zinc Coating	—	—	—	—			5.67	14.5	7.02	9.15
Hardness (Rc) / Rb	21.90	22.15	—	—						

A354BD Bar Threaded Ends

Department of Transportation
Structural Materials Testing Laboratory

SM Number = 08-1088

Sample	Area	Peak Load	Load at Offset	Peak Stress	Stress at Offset	Comments	Tested By
	(in²)	*(lbf)*	*(lbf)*	*(lbf)*	*(psi)*		
1A	5.97	923940	337553		56542	bar broke; necking okay	EMccrory

STRUCTURAL MATERIALS TESTING LABORATORY
FORM TL-652 (REV. 3/05)

TEST SPECIMEN PREPARATION AND RECORD

APPROVED FOR USE BY SMTL
QUALITY MANAGER: B Berger

SM No.	Contract No.	Requesting Lab Technician	Date Needed
08-1088	04-0120F4	Bruce	Routine
TL-0101 No.	**E.A./Spec. Desg./Object**	**Date Received**	**Date Tested/Provided**
C725977	04-0120F3	8/20/08	8/25/08

[X] Machine Shop

Work Requested

[ ] standard round tension test specimen, circle one: 0.500" 0.350" 0.250"

[ ] standard rectangular tension test specimen, circle one: 18" long, 8" gage length
8" long, 2" gage length

[ ] Charpy, circle one: 10mm x 10mm
10mm x 7.5mm

[X] hardness measurement sample (fasteners)

[ ] weld nugget

[ ] chemistry slug

[ ] other: _____

[ ] see instructions →

Instructions

Please machine samples for hardness testing

[ ] Chemistry Lab

type of material: _____

Work Requested

[ ] neoprene verification

[ ] oil swell

[ ] zinc coating weight

[ ] steel chemistry analysis

[ ] other: _____

← [ ] see instructions

[ ] Other (explain)

Comments or further instructions

The received service is acceptable

BCCB
Receiving Lab Technician

8/20/08
Date

DEPARTMENT OF TRANSPORTATION
DIVISION OF ENGINEERING SERVICES
Office of Structural Materials
Quality Assurance and Source Inspection

Bay Area Branch
690 Walnut Ave.St. 150
Vallejo, CA 94592-1133
(707) 649-5453
(707) 649-5493

Contract #: 04-0120F4
Cty: SF/ALA Rte: 80 PM: 13.2/13.9
File #: 76.8

COMPONENT MATERIAL INSPECTION REPORT

Resident Engineer: Pursell, Gary
Address: 333 Burma Road
City: Oakland, CA 94607

Report No: CMI-000016
Date Inspected: 27-Aug-2008

Contractor: Dyson Corp. & Subs
Location: Painesville, Ohio
Bridge No.: 34-0006

OSM Arrival Time: 1030
OSM Departure Time: 1330
Component:# DE Rod

The following material has been inspected in accordance with Section 6 of the Standard Specifications at the above location. At this point in the fabrication process it appears to comply with contract plans and specifications.

To be shipped to the following vendor or locations: Monnig Industries Inc.

Lot #	Bid Item #	Quantity		Material Description
B70-009-08	61	60	ea	Double end rod usable thread each end: 3”-4UNC-2A x 17’-2. 12”, Heat # M644914, Gr. A4140.
B70-009-08	61	36	ea	Double end rod usable thread each end: 3”-4UNC-2A x 9’-11. 51”, Heat # M644912, Gr. A4140.
B70-009-08	61	204	ea	NUT: 3”-4UNC-2B heavy hex spherical nut, Heat # A073667, Gr. 1025. HDG per ASTM-A153 & tapped .050” oversize with wax & dye.

Identification: one green tag was attached to one of the DE Rods

Summary of Items Observed:

On this date CALTRANS OSM Quality Assurance (QA) Inspector Ricardo Medina was present at The Dyson Corporation (DC) in Painesville, Ohio for the release of material listed above to be shipped to Monnig Industries Inc. in Glasgow Missouri. While at the facility the QA Inspector observed the following:

The QA Inspector arrived at The Dyson Corporation and met with Quality Control (QC) Inspector Antony Rabathly which provided the QA Inspector with material documentation including Mill Test Reports (MTR), Certificate of Compliance (COC), TTML Tensile Testing Metallurgical Laboratory hardness test reports and The Art Galvanizing WKS., Inc. COC for review and verification. The QA Inspector reviewed material’s documentation and performed a random visual verification of the material listed above. The documentation and visual verification of the material appeared to be in general compliance with the project specifications. The QA Inspector attached a green tag to material and assigned a Caltrans lot number B70-009-08 for tracking purposes

Summary of Conversations:

As noted in the body of the report above.

Comments

This report is for the purpose of determining conformance with the contract documents and is not for the purpose of making repair or fit for purpose recommendations. Should you require recommendations concerning repairs or remedial efforts please contact Ryan Smith, (858) 232-6799, who represents the Office of Structural Materials for

your project.

Inspected By:	Medina, Ricardo	Quality Assurance Inspector
Reviewed By:	Levell, Bill	QA Reviewer

DEPARTMENT OF TRANSPORTATION
DIVISION OF ENGINEERING SERVICES
Office of Structural Materials
Quality Assurance and Source Inspection

Bay Area Branch
690 Walnut Ave.St. 150
Vallejo, CA 94592-1133
(707) 649-5453
(707) 649-5493

Contract #: 04-0120F4
Cty: SF/ALA Rte: 80 PM: 13.2/13.9
File #: 01.15

SOURCE INSPECTION REPORT

Resident Engineer: Pursell, Gary
Address: 333 Burma Road
City: Oakland, CA 94607

Report No: SIR-000313
Date Inspected: 04-Sep-2008

Project Name: SAS Superstructure
Prime Contractor: American Bridge/Fluor Enterprises, a JV
Contractor: Monnig Industries, Inc.

OSM Arrival Time: 830
OSM Departure Time: 1100
Location: Glasgow, MO

Quality Control Contact: Jason Monnig
Quality Control Present: ☑ Yes ☐ No
Material transfer: ☐ Yes ☐ No ☑ N/A
Sampled Items: ☐ Yes ☐ No ☑ N/A
Stock Transfer: ☐ Yes ☐ No ☑ N/A
OK to Cut: ☐ Yes ☐ No ☑ N/A
Rebar Test Witness: ☐ Yes ☐ No ☑ N/A
Delayed/Cancelled: ☑ Yes ☐ No ☐ N/A
Other:
Bridge No: 34-0006
Component: Threaded Anchor Rods
Bid Item: 52F
Lot No: N/A

Summary of Items Observed:
Caltrans Quality Assurance (QA) Inspector Edward Leach arrived at Monnig Industries, Inc. in Glasgow Missouri for the purpose of performing sampling of in process inspection and QA sampling of galvanized threaded anchor rod assemblies.

Prior to arriving at the facility the QA Inspector was informed by Structural Materials Representative (SMR) Markian Petrina that Monnig industries will perform galvanizing for several different lots of threaded anchor rod assemblies that will be shipped to the jobsite. The QA Inspector was informed by Mr. Petrina that each lot will consist of a 1200 mm reduced length anchor rod that will specifically be used for QA testing at the Sacramento Caltrans testing facility.
Upon arriving to the facility on this date, the QA Inspector met with Monnig general manager Jason Monnig to discuss details of the process and to review pertinent documentation related to the project. Mr. Monnig stated that due to adverse weather conditions on this date Monnig will not be able to start shot blasting because the dew point and the temperature are within 3 degrees of each other and the continuous rain creates a concern for corrosion as the material has to be transported outside by forklift from the shot blasting facility to the galvanizing facility. Mr. Monnig stated that shot blasting will resume the following morning once the dew point and temperature have been verified and are not within 3 degrees of each other.
This information was relayed to SMR Markian Petrina.
Summary of Conversations:
As noted above in report.
Comments

SOURCE INSPECTION REPORT

(Continued Page 2 of 2)

This report is for the purpose of determining conformance with the contract documents and is not for the purpose of making repair or fit for purpose recommendations. Should you require recommendations concerning repairs or remedial efforts please contact Venkatesh Iyer, (858) 967-6363, who represents the Office of Structural Materials for your project.

Inspected By:	Leach,Ed	Quality Assurance Inspector
Reviewed By:	Levell,Bill	QA Reviewer

DEPARTMENT OF TRANSPORTATION
DIVISION OF ENGINEERING SERVICES
Office of Structural Materials
Quality Assurance and Source Inspection

Bay Area Branch
690 Walnut Ave.St. 150
Vallejo, CA 94592-1133
(707) 649-5453
(707) 649-5493

Contract #: 04-0120F4
Cty: SF/ALA Rte: 80 PM: 13.2/13.9
File #: 01.15

SOURCE INSPECTION REPORT

Resident Engineer: Pursell, Gary
Address: 333 Burma Road
City: Oakland, CA 94607

Report No: SIR-000311
Date Inspected: 05-Sep-2008

Project Name: SAS Superstructure
Prime Contractor: American Bridge/Fluor Enterprises, a JV
Contractor: Monnig Industries, Inc.

OSM Arrival Time: 845
OSM Departure Time: 1600
Location: Glasgow, MO

Quality Control Contact: Jason Monnig
Quality Control Present: ☑ Yes ☐ No
Material transfer: ☐ Yes ☐ No ☑ N/A
Sampled Items: ☐ Yes ☐ No ☑ N/A
Stock Transfer: ☐ Yes ☐ No ☑ N/A
OK to Cut: ☐ Yes ☐ No ☑ N/A
Rebar Test Witness: ☐ Yes ☐ No ☑ N/A
Delayed/Cancelled: ☐ Yes ☑ No ☐ N/A
Other:
Bridge No: 34-0006
Component: Threaded Anchor Rods
Bid Item: 52F
Lot No: N/A

Summary of Items Observed:

Caltrans Quality Assurance (QA) Inspector Edward Leach arrived at Monnig Industries, Inc. in Glasgow Missouri for the purpose of performing sampling of in process inspection and QA sampling of galvanized threaded A354, Gr.BD anchor rod assemblies.

The QA Inspector arrived at Monnig Industries and observed shot blasting in progress for the first of seven separate lots of material. The shot blasting was being performed by sub-contractor Phoenix Industries. The personnel were observed using fine iron grit particles to conduct this operation. The QA Inspector observed that the threaded ends of each rod were masked with a protective covering made from a thin plastic material that was secured by duct tape. The plastic material provided protection from the adhesive on the duct tape. The material was shot blasted until a near white color was achieved on the surface. The personnel were using a photographic color chart specification to determine when the right amount of shot blasting had been achieved. The QA Inspector was informed by General Manager Jason Monnig that the first lot is the largest of the seven lots and consists of twenty-four rods which includes the 1200 mm sample specimen. Mr. Monnig also stated that the temperature and dew point are verified each hour or when shot blasting is about to begin for another lot of material.

At this time the QA Inspector, along with Mr. Jason Monnig verified environmental conditions to determine that operations can proceed. Mr. Monnig stated that they have the forklift capacity to transport only twelve rods at once to the galvanizing facility, therefore the first lot will be divided into two groups and once the galvanizing is complete then the lots will remain separated so there is no mix up of material. Once the shot blasting was complete for the first lot the stop time was recorded onto the Quality Control (QC) traveler. The maximum time allowed between shot blasting and dipping is 4 hours. The QA Inspector observed personnel load the first twelve rods onto a steel rack before transport to the galvanizing facility.

Once the material arrived at the galvanizing facility Monnig personnel removed the protective coverings from the threads on each end and began a visual inspection and cleaning of the threads. The cleaning was performed by wire brush and soft buffer brushes to remove any loose grit. The QA Inspector also performed a random visual inspection of the steel threads and did not observe any discrepancies.

The material was then transported to a pre-flux bath where the material was dipped into a cleaning solution mixture combined with water that is heated to 106 degrees Fahrenheit. The purpose of this process was to clean the material and form an inner metallic layer to help the molten zinc adhere to the material surface. After this process the material was then transferred to a kettle drum of molten zinc that is superheated to 850 degrees Fahrenheit. The material was then dipped for approximately 1 minute.

The QA Inspector then observed personnel lifting the material from the kettle drum with a chain hoist and immediately cleaning off excess coating from the threaded areas and the main body of each anchor rod. The material was then allowed a cool down time before personnel began cleaning areas that were in contact with the chain hoist. Later in the shift the QA Inspector observed Monnig personnel install the 3” heavy hex nuts on each end of the anchor rods to make sure the threads were free of obstructions. The QA Inspector observed that the hex nuts were installed successfully. The QA Inspector was informed by Mr. Jason Monnig that personnel will spend the remainder of the day and most of the following day repeating these processes to galvanize the remaining lots. The following digital images below detail the work in progress.

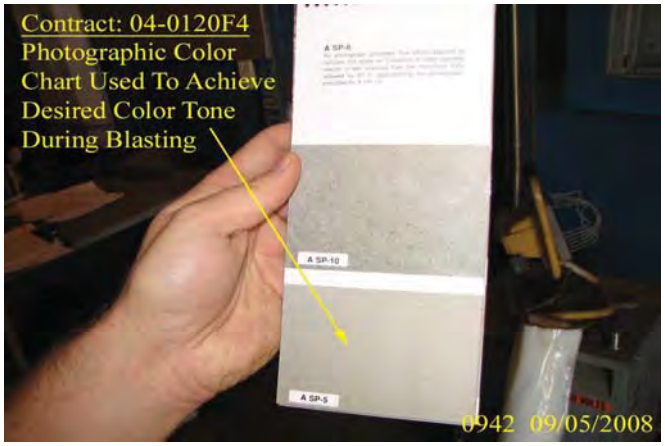

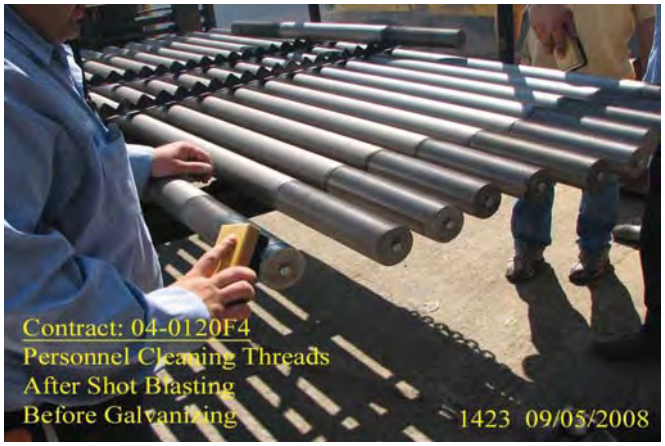

Summary of Conversations:

As noted above in report.

Comments

This report is for the purpose of determining conformance with the contract documents and is not for the purpose of making repair or fit for purpose recommendations. Should you require recommendations concerning repairs or remedial efforts please contact Venkatesh Iyer, (858) 967-6363, who represents the Office of Structural Materials for your project.

Inspected By:	Leach,Ed	Quality Assurance Inspector
Reviewed By:	Levell,Bill	QA Reviewer

DEPARTMENT OF TRANSPORTATION
DIVISION OF ENGINEERING SERVICES
Office of Structural Materials
Quality Assurance and Source Inspection

Bay Area Branch
690 Walnut Ave.St. 150
Vallejo, CA 94592-1133
(707) 649-5453
(707) 649-5493

Contract #: 04-0120F4
Cty: SF/ALA Rte: 80 PM: 13.2/13.9
File #: 76.25B

QUALITY ASSURANCE -- NON-CONFORMANCE REPORT

Location: Monnig Industries--Glasgow, Missouri **Report No:** NCR-000198
Prime Contractor: American Bridge/Fluor Enterprises, a JV **Date:** 05-Sep-2008
Submitting Contractor: Dyson Corp. & Subs **NCR #:** DYSN-0004

Type of problem:

Welding	☐	**Concrete**	☐	**Other**	☑		
Welding	☐	**Curing**	☐	**Procedural**	☐	**Bridge No:**	34-0006
Joint fit-up	☐	**Coating**	☐	**Other**	☐	**Component:**	E2 Shear Key Anchor Rod Assemblies
Procedural	☐	**Procedural**	☐	**Descripton:**	Shipment without release after late procurement		

Reference Description: ABF shipped E2 Shear Key Anchor Rod Assemblies without QA testing or release due to time constraints from late ordering

Description of Non-Conformance:

ABF procured ASTM A 354 BD anchor rod assemblies too late to allow normal release procedures. As a result, QA sampling and shipment occurred simultaneously, and A 354 Grade BD anchor rods and A 563 hex nuts for the E2 Shear Key were shipped to the jobsite without QA testing results or METS release. Time was constrained because these components were ordered on a schedule that led to completion of fabrication only several days before anticipated installation.

In addition, documentation was either missing or incomplete.

Applicable reference:

Caltrans Standard Specifications, July 1999, (SS) Section 5-1.13, "Final Inspection," p.28: "When the work has been completed, the Engineer will make the final inspection."

SS, Section 6-1.07, "Certificates of Compliance," para. 1, p. 33: "A Certificate of Compliance shall be furnished..."

Who discovered the problem: Edward Leach, METS QA Inspector
Name of individual from Contractor notified: Robert (Bob) Kick,
Time and method of notification: 1600, 9/16/08, personal conversation with ASMR
Name of Caltrans Engineer notified: Brian Boal
Time and method of notification: 1400, 9/16/08, personal conversation with SMR
QC Inspector's Name: Unknown
Was QC Inspector aware of the problem: ☐ **Yes** ☑ **No**
Contractor's proposal to correct the problem:
None at this time.
Comments:

QUALITY ASSURANCE -- NON-CONFORMANCE REPORT

This report is for the purpose of determining conformance with the contract documents and is not for the purpose of making repair or fit for purpose recommendations. Should you require recommendations concerning repairs or remedial efforts please contact Venkatesh Iyer, (858) 967-6363, who represents the Office of Structural Materials for your project.

Inspected By:	Petrina,Markian	SMR
Reviewed By:	Iyer,Venkatesh	SMR

Monnig Industries, Inc.

HOT DIP & MECHANICAL GALVANIZING
P.O. BOX 98
GLASGOW, MO 65254
PH. 660-338-2242 FAX: 660-338-5199

CERTIFICATE OF COMPLIANCE

SEPTEMBER 6, 2008

CUSTOMER: DYSON CORP.
53 FREEDOM ROAD
PAINESVILLE, OH 44077

P.O.: 61645

PRODUCT DESCRIPTION:

CALTRAN THREADED RODS LOT # MJF-28 13 PCS (3.00" X 17'-2.12"), MJF-29 7 PCS (3.00" X 17'-2.12"), MJF-30 11 PCS (3.00" X 17'-2.12"), MJF-31 12 PCS (3.00" X 17'-2.12"), MJF-32 13 PCS (3.00" X 17'-2.12"), MIS-26 23 PCS (3.00" X 9'11.51"), MIS-27 17 PCS (4 PCS 3.00" X 17'-2.12" & 13 PCS 3.00" X 9'11.51")

THE PRODUCT LISTED ABOVE WAS HOT-DIP GALVANIZED, TESTED, SAMPLED AND INSPECTED IN ACCORDANCE WITH THE SPECIFICATION, PURCHASE ORDER, AND ANY SUPPLEMENTARY REQUIREMENTS AND WAS FOUD TO MEET THOSE REQUIREMENTS UNLESS OTHERWISE NOTED.

PATRICIA S. WESTHUES
NOTARY PUBLIC STATE OF MISSOURI
HOWARD COUNTY
MY COMMISSION EXP. APR. 18, 2012

John Monnig
JOHN MONNIG, PRESIDENT

Patricia S Westhues
PATRICIA S. WESTHUES,
NOTARY PUBLIC

Monnig Industries, Inc.

HOT DIP & MECHANICAL GALVANIZING
P.O. BOX 98
GLASGOW, MO 65254
PH. 660-338-2242 FAX: 660-338-5199

SEPTEMBER 6, 2008

DYSON CORPORATION
50 FREEDOM ROAD
PAINESVILLE, OH 44077

RE: GALVANIZING CERTIFICATE
P.O. 61645 CALTRAN RODS
LOT # MJF-28 13 PCS (3.00" X 17'-2.12"), MJF-29 7 PCS (3.00" X 17'-2.12"), MJF-30 11 PCS (3.00" X 17'-2.12"), MJF-31 12 PCS (3.00" X 17'-2.12"), MJF-32 13 PCS (3.00" X 17'-2.12"), MIS-26 23 PCS (3.00" X 9'11.51"), MIS-27 17 PCS (4 PCS 3.00" X 17'-2.12" & 13 PCS 3.00" X 9'11.51")

THIS WILL CERTIFY THAT THE MATERIAL GALVANIZED ON THE ABOVE JOB MEETS OR EXCEEDS THE MINIMUM REQUIREMENTS OF ASTM A-153 SPECIFICATIONS.

MILL READINGS

7.0	7.5	7.1	5.2
8.2	6.7	8.5	7.1
8.6	9.2	6.7	5.1

John Monnig
JOHN MONNIG, PRESIDENT

PATRICIA S. WESTHUES
NOTARY PUBLIC STATE OF MISSOURI
HOWARD COUNTY
MY COMMISSION EXP. APR. 18, 2012

Patricia S Westhues
PATRICIA S. WESTHUES,
NOTARY PUBLIC

DEPARTMENT OF TRANSPORTATION
DIVISION OF ENGINEERING SERVICES
Office of Structural Materials
Quality Assurance and Source Inspection

Bay Area Branch
690 Walnut Ave.St. 150
Vallejo, CA 94592-1133
(707) 649-5453
(707) 649-5493

Contract #: 04-0120F4
Cty: SF/ALA Rte: 80 PM: 13.2/13.9
File #: 01.15

SOURCE INSPECTION REPORT

Resident Engineer: Pursell, Gary
Address: 333 Burma Road
City: Oakland, CA 94607

Report No: SIR-000312
Date Inspected: 06-Sep-2008

Project Name: SAS Superstructure
Prime Contractor: American Bridge/Fluor Enterprises, a JV
Contractor: Monnig Industries, Inc.

OSM Arrival Time: 800
OSM Departure Time: 1130
Location: Glasgow, MO

Quality Control Contact: Jason Monnig
Quality Control Present: ☑ Yes ☐ No
Material transfer: ☐ Yes ☐ No ☑ N/A
Sampled Items: ☑ Yes ☐ No ☐ N/A
Stock Transfer: ☐ Yes ☐ No ☑ N/A
OK to Cut: ☐ Yes ☐ No ☑ N/A
Rebar Test Witness: ☐ Yes ☐ No ☑ N/A
Delayed/Cancelled: ☐ Yes ☑ No ☐ N/A
Other:
Bridge No: 34-0006
Component: Threaded Anchor Rods
Bid Item: 52F
Lot No: B77-089-08

Summary of Items Observed:

Caltrans Quality Assurance (QA) Inspector Edward Leach arrived at Monnig Industries, Inc. in Glasgow Missouri for the purpose of performing sampling and in process inspection of galvanized threaded A354, Gr.BD anchor rod assemblies.

On this date the QA Inspector sampled 1ea, 1200mm A354, Gr.BD threaded anchor rod from each lot and 9ea 4UNC-2B heavy hex spherical nuts to be sent to Caltrans testing lab for QA testing. Caltrans Lot # B77-089-08 was assigned to TL-101 # C726047, Production lots sampled are designated as MIS-26, MIS-27, MJF-28, MJF-29, MJF-30, MJF-31, MJF-32 & LTZ-1. Anchor rod heat identifications are MIS-M644912, MJF-M644914 & hex nut heat identification is A073667.

As of this date this QA Inspector observed completion of lot #26 & #27. The remaining material was still in process at the time QA Inspector left the jobsite.

Summary of Conversations:

The QA Inspector was informed by Structural Materials Representative (SMR) Markian Petrina that ABF intends to ship the material to the jobsite as soon as Monnig Industries completes galvanizing and before QA testing is complete. Mr. Petrina also stated that Caltrans previously agreed with ABF that shipping will commence immediately after production.

Comments

This report is for the purpose of determining conformance with the contract documents and is not for the purpose of making repair or fit for purpose recommendations. Should you require recommendations concerning repairs or remedial efforts please contact Venkatesh Iyer, (858) 967-6363, who represents the Office of Structural Materials

for your project.

Inspected By:	Leach,Ed	Quality Assurance Inspector
Reviewed By:	Levell,Bill	QA Reviewer

State of California
Department of Transportation

Structural Materials Testing Laboratory
5900 Folsom Boulevard, Sacramento, CA 95819

TEST REPORT

ACCREDITED
CERTIFICATE NO. 2364.01

Remarks ref: ASTM A354 Grade BD, TM06. Heat #M644912 - Heat Treat Code MIS-26 & 27; Heat #M644914 Heat Treat Code MJF-28, 29, 30, 31 & 32

Sample No: SM-08-1158
Date Sampled: 08/26/08 **Date Rec'd:** 08/29/08 **Date Reported:** Unknown
Lot No: B7708908 / B6901308 **TL-101 / SIC No:** Unknown
Contract No: 04-0120F4
Material: 3"x 300mm 4140 Billet Material Test Samples For A354 Grade BD Anchor Bolts. 3" A354 BD HDG Anchor Bolts w/ Sperical Nuts & Washers.
Manufacturer: Dyson
Sampler: Ed Leach

9-18-08

Results: SAMPLES SUBMITTED ARE SATISFACTORY FOR USE

SOURCE	CHARGE	E.A.	SUB JOB	SPECIAL DESIGNATION	OBJECT
59318	04	0120F3			1270

STATE OF CALIFORNIA • DEPARTMENT OF TRANSPORTATION
SAMPLE IDENTIFICATION CARD
TL-0101 (REV. 10/97)
CARD NUMBER C726233

STATE OF CALIFORNIA • DEPARTMENT OF TRANSPORTATION
SAMPLE IDENTIFICATION CARD
TL-0101 (REV. 10/97)
CARD NUMBER C726047 7/19

SM08-1158

☑ PRELIMINARY TESTS
☐ PROCESS TESTS
☐ ACCEPTANCE TESTS
INDEPENDENT ASSURANCE TESTS
☐ DIST. LAB
☑ TRANS. LAB
☐ SPECIAL TESTS

SAMPLE SENT TO:
☑ HDQTRS. LAB
☐ BRANCH LAB
☐ DIST. LAB

FIELD NO.
DIST. LAB NO.
LOT NO. B77-08-08
P.O. OR REQ. NO.
SHIPMENT NO.
AUTHORIZATION NO.

SAMPLE OF A354 Threaded Anchor Rods Heavy Hex
FOR USE IN SAS Oakland Bay Bridge Spherical Nuts
SAMPLE FROM Lot 26, 27, 28, 29, 30, 31, 32
DEPTH
LOCATION OF SOURCE Morris Industries, Sloan, MD
THIS SAMPLE IS SHIPPED IN (NO. CONTAINERS) 1 Bundle
AND IS ON E OF A GROUP OF 1 Bundle
SAMPLES REPRESENTING (LONS, GALS, BBLS, STA, ETC.) Three Rods
OWNER OR MANUFACTURER Morris Industries
TOTAL QUANTITY AVAILABLE 1 Bundle
TEST RESULTS DESIRED ☐ NORMAL ☑ PRIORITY
DATE NEEDED ASAP
REMARKS Threaded anchor rods with Heavy Hex spherical nuts
GA

COVER ADDITIONAL INFORMATION WITH LETTER
DATE SAMPLEED 9-6-08
BY
DIST, CO, RTE, PM 04/SF/80/8.1-8.2
TITLE CA
LIMITS SFR Marker Pattern
CONT. NO. 04-0120F4
FED. NO.
RES. ENGR. OR SUPT. Gary Purcell
ADDRESS
CONTRACTOR Vote for Not Scaples Repairing Joints

ENCLOSE WITH SAMPLE

Print

4-12-08 test 15/15; Nuts & Washers

A354 BD

Caltrans

Department of Transportation
Structural Materials Testing Laboratory
Rebar Mechanical Couplers

SM Number = 08-1158

Sample	Area	Peak Load	Load at Offset	Peak Stress	Stress at Offset	Comments	Tested By
	(in²)	(lbf) 835800	(lbf) 686550	(lbf)	(psi)		
1	5.97	940290	106871 Invalid Yeild *		17902	bar broke; necking okay	EMccrory
2	5.97	941060	931020 ✓ OK		155950	bar broke; necking okay	EMccrory
3	5.97	951000	103620 Invalid Yield *		17357	bar broke; necking okay	EMccrory
4	5.97	941340	60519 Invalid Yield *		10137	bar broke; necking okay	EMccrory
5	5.97	955630	654768 Invalid Yield *		109676	bar broke; necking okay	EMccrory
6	5.97	953290	866568 ✓ OK		145154	bar broke; necking okay	EMccrory
7	5.97 OK	950180 OK	747503 ✓ OK		125210	bar broke; necking okay OK	EMccrory

* Invalid Yield Test Due to Grip Slip on Threads
Refer to Machined Sample Yield Strength

Date Received - 8-26-08 test 30 days
9-12-08 for Bolts, Nuts & Washers

A354 BD

Caltrans

Department of Transportation
Structural Materials Testing Laboratory
Rebar Mechanical Couplers

SM Number = 08-1158

Sample	Area	Peak Load	Load at Offset	Peak Stress	Stress at Offset	Comments	Tested By
	(in²)	(lbf) 835800	(lbf) 686550	(lbf)	(psi)		
1	5.97	940290	106871 Invalid Yeild *		17902	bar broke; necking okay	EMccrory
2	5.97	941060	931020 ✓ OK		155950	bar broke; necking okay	EMccrory
3	5.97	951000	103620 Invalid Yield *		17357	bar broke; necking okay	EMccrory
4	5.97	941340	60519 Invalid Yield *		10137	bar broke; necking okay	EMccrory
5	5.97	955630	654768 Invalid Yield *		109676	bar broke; necking okay	EMccrory
6	5.97	953290	866568 ✓ OK		145154	bar broke; necking okay	EMccrory
7	5.97 OK	950180 OK	747503 ✓ OK		125210	bar broke; necking okay OK	EMccrory

* Invalid Yield Test Due To Grip Slip on Threads
Refer to Machined Sample Yield Strength

STRUCTURAL MATERIALS TESTING LABORATORY
FORM TM-3 (REV. 2/05)

FASTENER ASSEMBLY WORKSHEET

APPROVED FOR USE BY SMTL QUALITY MANAGER:

SM Number 28 1158 Lot Number 377890E Page 1 of 1

Contract 37-C 3C 54 TL-0101 Number _____ Date Rec'd. 7/12/09 Date Tested: 7/16/09

Bolts: A 354 BD Lab Technician: EM

Sample No.	1	2	3	4	5	6	7			
Mfg. Lot No.	26	27	28	29	30	31	32			
Product Markings										
Size	3-4									
Pitch Diameter	2.849	2.838	2.839	2.849	2.846	2.844	2.840	✓		
Bolt Length	4"									
Ring Gages/Go Nogo	NA									
Zinc Coating Thick.	8.16	7.73	5.55	6.85	5.40	6.77	5.65	✓		
Hardness Rc / Rb	33.50 ✓						32.60 ✓			
Wedge Tensile										

Nuts: A 563 DH

Sample No.	1	2	3	4	5	6	7	8	9	10
Mfg. Lot No.	LTZ									
Product Markings	LTZ13	DH								
Size	3-4									
Go / No-Go	NA									
Zinc Coating	9.56	6.99	4.99	8.48	7.90	6.96	7.62	8.64	6.72	5.80 ✓
Hardness Rc / Rb		20.45 OK				22.05 OK		18.07 OK		
Nut Proof Load	Hardness Low But Proof Load Good ✓									

Washer: F436

Sample No.	1	2	3							
Mfg. Lot No.										
Product Markings										
Zinc Coating										
Hardness Rc / Rb	27.06	✓								

STRUCTURAL MATERIALS TESTING LABORATORY
FORM TL-652 (REV. 3/05)

TEST SPECIMEN PREPARATION AND RECORD

APPROVED FOR USE BY SMTL
QUALITY MANAGER: B Berger

SM No.	Contract No.	Requesting Lab Technician	Date Needed
08-1158	04-0120F4	Erin	Routine
TL-0101 No.	**E.A./Spec. Desg./Object**	**Date Received**	**Date Tested/Provided**
C726047	04-0120F4	9/12/08	9/16/08

[X] Machine Shop

Work Requested

[ ] standard round tension test specimen, circle one: 0.500" 0.350" 0.250"

[ ] standard rectangular tension test specimen, circle one: 18" long, 8" gage
8" long, 2" gage length

[ ] Charpy, circle one: 10mm x 10mm
10mm x 7.5mm

[ ] hardness measurement sample (fasteners)

[ ] weld nugget

[ ] chemistry slug

[X] other: Nut for Hardness

[ ] see instructions →

Please flat parallel sides. Min .025"

1.30"

[ ] Chemistry Lab

type of material: _____

Work Requested

[ ] neoprene verification

[ ] oil swell

[ ] zinc coating weight

[ ] steel chemistry analysis

[ ] other: _____

← [ ] see instructions

[ ] Other (explain)

Comments or further instructions

The received service is acceptable

Receiving Lab Technician

9/16/08
Date

.505 SAMPLES

Department of Transportation
Structural Materials Testing Laboratory
UTM: BALDWIN 60 Kip

SM Number = 08-1158

Sample	Heat Number	Diameter (in)	Area (in²)	Stress at Offset (psi) 115,000	Tensile Strength (psi) 140,000	Elongation in 4 x d (%) 14%	Tested By
28A	M644914	0.5	0.1963	150530	168020	14.2	BJohnson
28B	M644914	0.501	0.1971	151172 OK	167580 OK	14.1 OK	BJohnson
31A	M644914	0.5	0.1963	144914	163560	15.6 Avg 14.15	BJohnson
31b	M644914	0.5	0.1963	145528 OK	164510 OK	12.7 OK	BJohnson
32A	M644914	0.501	0.1971	144943	164170	14.8	BJohnson
32B	M644914	0.5	0.1963	142012 OK	161960 OK	14.4 OK	BJohnson
29A	M644914	0.5	0.1963	138196	159710	13.6 Avg 14.2	BJohnson
29B	M644914	0.5	0.1963	141973 OK	163220 OK	14.8 OK	BJohnson
26A	M644912	0.502	0.1979	151606	160730	12.5 Avg 13.45	BJohnson
26B	M644912	0.498	0.1948	147456 OK	165980 OK	14.4 OK Per RA Low	BJohnson
27A	M644912	0.5	0.1963	147530	165880	16	BJohnson
27B	M644912	0.499	0.1956	150974 OK	168010 OK	16.2 OK	BJohnson
30A	M644914	0.499	0.1956	153241	170080	13.6 Avg 13.45	BJohnson
30B	M644914	0.5	0.1963	157983 OK	173350 OK	13.3 Low OK Per RA	BJohnson

STATE OF CALIFORNIA • DEPARTMENT OF TRANSPORTATION

TRANSPORTATION LABORATORY
REPORT OF TESTS

TL - 619 (REV. 5/95)

S. M. NO. 08-1158	DATE RECEIVED 7-8-08
T 101 NO.	CONT., W.O., OR P.O. NO. 04-0120F4
LOT NO.	F.A.P. NO.

TEST NAME 505	DISTRICT	COUNTY	ROUTE	POST MILES
CONTRACTOR	SAMPLED BY		DATE SAMPLED	SUPPLY SOURCE
AGENCY	MANUFACTURER		MATERIAL TESTED FOR	

SAMPLE NO.	SAMPLE TYPE	HEAT NO.	SIZE	AREA BEFORE	AREA AFTER	YIELD ~~MPa~~ ACTUAL	YIELD PSI	ULTIMATE ~~PSI~~ ACTUAL	ULTIMATE ~~MPa~~	ELONG. ~~IN~~ %	RED. AREA %	COLD BEND	CHEMICAL ANALYSIS C	MN	P	S	SI	A OR E
28A		MJF M644914	.500	2.031	2.319 ~~2.031~~		150530		168020	14.2								
28B		"	.501	2.025	2.311		151172		167580	14.1								
							144914											
31A		MJF M644914	.501	2.024	2.340		~~163560~~ 152		163560	15.6								
31B		"	.500	2.032	2.291		145528		164570	12.7								
32A		MJF M644914	.501	2.033	2.333		144943		164170	14.8								
32B		"	.500	2.027	2.319		142012		161960	14.4								
29A		MJF M644914	.500	2.027	2.303		138906		159710	13.6								
29B		"	.500	2.024	2.328		141973		163220	14.8								

SPECIFICATIONS

REMARKS

DATE TESTED 7-8-08	TESTED BY BRAD	APPROVED BY

FM 3018 M 95

STATE OF CALIFORNIA • DEPARTMENT OF TRANSPORTATION

TRANSPORTATION LABORATORY
REPORT OF TESTS

TL - 619 (REV. 5/95)

S. M. NO. 08-1158	DATE RECEIVED 9-8-08
T 101 NO.	CONT., W.O., OR P.O. NO. 04-0120F4
LOT NO.	F.A.P. NO.

TEST NAME 505	DISTRICT	COUNTY	ROUTE	POST MILES
CONTRACTOR	SAMPLED BY	DATE SAMPLED	SUPPLY SOURCE
AGENCY	MANUFACTURER	MATERIAL TESTED FOR	

SAMPLE NO.	SAMPLE TYPE	HEAT NO.	SIZE	AREA BEFORE	AREA AFTER	YIELD MPa ACTUAL	YIELD PSI	ULTIMATE PSI ACTUAL	ULTIMATE MPa	ELONG. IN %	RED. AREA %	COLD BEND	CHEMICAL ANALYSIS C	MN	P	S	SI	A OR E
26A.		MIS M644912	.502	2.032	2.285		151604		160730	12.5								
26B.		"	.498	2.024	2.316		147456		165980	14.4								
							147530											
27A.		"	.500	2.028	2.353		~~147455~~ 152		165880	16.0								
27B.		"	.499	2.020	2.347		150974		168010	16.2								
30A.		MIS M644914	.499	2.033	2.310		153241		170080	13.6								
30B.		"	.500	2.033	2.304		157995		173350	13.3								

SPECIFICATIONS

REMARKS

DATE TESTED 9-8-08	TESTED BY JPAD	APPROVED BY

FM 3018 M 95

STRUCTURAL MATERIALS TESTING LABORATORY
FORM TL-652 (REV. 3/05)

TEST SPECIMEN PREPARATION AND RECORD

APPROVED FOR USE BY SMTL
QUALITY MANAGER: B Berger

SM No.	Contract No.	Requesting Lab Technician	Date Needed
08-1158	04-0120F4	Glen	Routine
TL-0101 No.	**E.A./Spec. Desg./Object**	**Date Received**	**Date Tested/Provided**
—	04-0120F3	8-29-08	

[X] Machine Shop

Work Requested

[X] standard round tension test specimen, circle one: 0.500" 0.350" 0.250"

[ ] standard rectangular tension test specimen, circle one: 18" long, 8" gage length
8" long, 2" gage length

[ ] Charpy, circle one: 10mm x 10mm
10mm x 7.5mm

[ ] hardness measurement sample (fasteners)

[ ] weld nugget

[ ] chemistry slug

[ ] other: _____

[ ] see instructions →

Instructions

Please machine 2 505's from each 3" Dia, Slugon ~~quarter~~ quater point, Heat Code MIS-26 MIS-27, MJF 28, MJF-29 MJF-30, MJF-31, MJF-32

[ ] Chemistry Lab

type of material: _____

Work Requested

[ ] neoprene verification

[ ] oil swell

[ ] zinc coating weight

[ ] steel chemistry analysis

[ ] other: _____

← [ ] see instructions

[ ] Other (explain)

Comments or further instructions

Completed 09.08-08 m.z.

The received service is acceptable

Receiving Lab Technician

9-8-08
Date

TRANSLAB

S.M. INSPECTION REPORT FOR HEAT # 28

COMPLETED BY M.Z.
DATE: 09-05-08

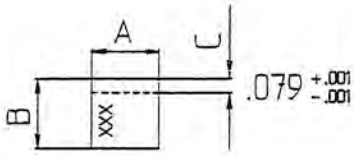

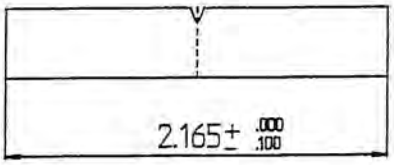

CHARPY IMPACT SPECIMENS

- [ ] FULL SIZE 10MM X 10MM
- [ ] REDUCED

MATERIAL SURFACE

NOTCH ORIENTATION

	OK
1	
2	
3	

	A	B	C	2.165	.010 R +.001 -.001
1					
2					
3					

NOTE: IMPACT SPECIMENS ARE TO BE GROUND TO .394 +.003 -.003 ON SURFACE GRINDER
ASTM E23 CALLS FOR 45 deg. V NOTCH WITH A .010 + or - .001 RADIUS

A DIA.

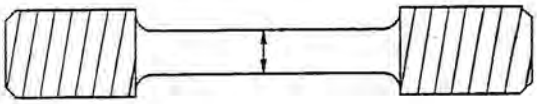

- [x] .500 +.010 -.010
- [ ] .350 +.007 -.007
- [ ] OTHER

A DIA. IS

A	.4996
B	.5009

NOTES / SPECIAL INSTRUCTIONS

TRANSLAB

S.M. INSPECTION REPORT FOR HEAT # 31

COMPLETED BY M.Z.
DATE: 09-08-08

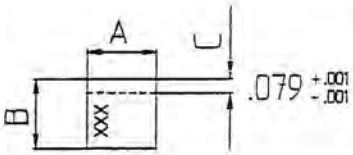

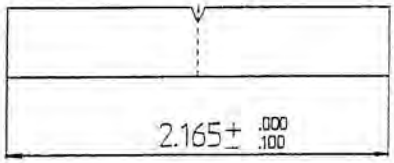

CHARPY IMPACT SPECIMENS

- [ ] FULL SIZE 10MM X 10MM
- [ ] REDUCED

MATERIAL SURFACE

NOTCH ORIENTATION

	OK
1	
2	
3	

	A	B	C	2.165	.010 R +.001 -.001
1					
2					
3					

NOTE: IMPACT SPECIMENS ARE TO BE GROUND TO .394 ±.003 -.003 ON SURFACE GRINDER
ASTM E23 CALLS FOR 45 deg. V NOTCH WITH A .010 + or - .001 RADIUS

A DIA.

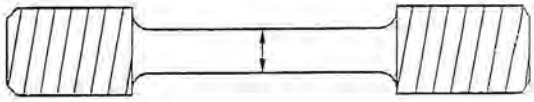

- [x] .500 +.010 -.010
- [ ] .350 +.007 -.007
- [ ] OTHER

A DIA. IS

A	.5014
B	.4997

NOTES / SPECIAL INSTRUCTIONS

TRANSLAB

S.M. INSPECTION REPORT FOR HEAT # 32

COMPLETED BY M.Z.
DATE: 09-08-08

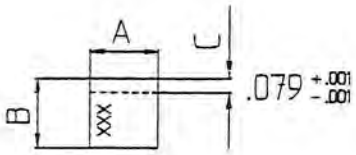

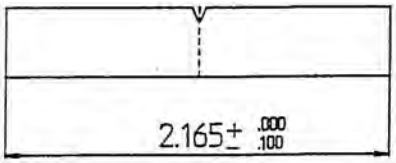

CHARPY IMPACT SPECIMENS

- [ ] FULL SIZE 10MM X 10MM
- [ ] REDUCED

MATERIAL SURFACE

NOTCH ORIENTATION

	OK
1	
2	
3	

	A	B	C	2.165	.010 R +.001 -.001
1					
2					
3					

NOTE: IMPACT SPECIMENS ARE TO BE GROUND TO .394 +.003 -.003 ON SURFACE GRINDER
ASTM E23 CALLS FOR 45 deg. V NOTCH WITH A .010 + or - .001 RADIUS

A DIA.

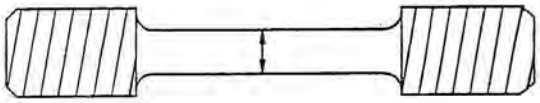

- [x] .500 +.010 -.010
- [ ] .350 +.007 -.007
- [ ] OTHER

A DIA. IS

A	.501
B	.501

NOTES / SPECIAL INSTRUCTIONS

TRANSLAB

S.M. INSPECTION REPORT FOR HEAT # 29

COMPLETED BY M.Z.
DATE: 09.08.08

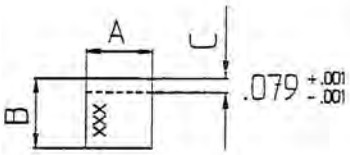

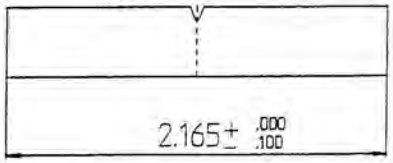

CHARPY IMPACT SPECIMENS

- [ ] FULL SIZE 10MM X 10MM
- [ ] REDUCED

MATERIAL SURFACE

NOTCH ORIENTATION

	OK
1	
2	
3	

	A	B	C	2.165	.010 R +.001 -.001
1					
2					
3					

NOTE: IMPACT SPECIMENS ARE TO BE GROUND TO .394 +.003 -.003 ON SURFACE GRINDER
ASTM E23 CALLS FOR 45 deg. V NOTCH WITH A .010 + or - .001 RADIUS

A DIA.

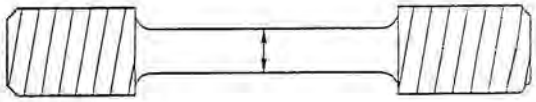

- [x] .500 +.010 -.010
- [ ] .350 +.007 -.007
- [ ] OTHER

A DIA. IS

A	.5006
B	.5003

NOTES / SPECIAL INSTRUCTIONS

TRANSLAB

S.M. INSPECTION REPORT FOR HEAT # 26

COMPLETED BY M.Z.
DATE: 09-08-08

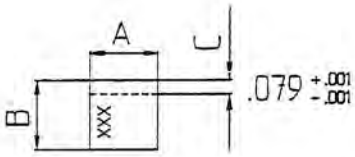

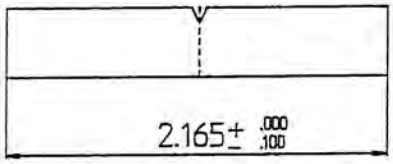

CHARPY IMPACT SPECIMENS

- [ ] FULL SIZE 10MM X 10MM
- [ ] REDUCED

MATERIAL SURFACE

NOTCH ORIENTATION

	OK
1	
2	
3	

	A	B	C	2.165	.010 R +.001 -.001
1					
2					
3					

NOTE: IMPACT SPECIMENS ARE TO BE GROUND TO .394 +.003 -.003 ON SURFACE GRINDER
ASTM E23 CALLS FOR 45 deg. V NOTCH WITH A .010 + or - .001 RADIUS

A DIA.

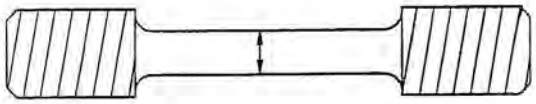

- [x] .500 +.010 -.010
- [ ] .350 +.007 -.007
- [ ] OTHER

A DIA. IS

A	.5021
B	.4981

NOTES / SPECIAL INSTRUCTIONS

TRANSLAB

S.M. INSPECTION REPORT FOR HEAT # 27

COMPLETED BY M.Z.
DATE: 09-08-08

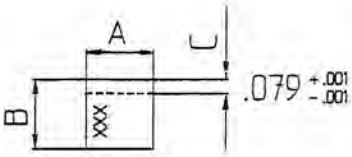

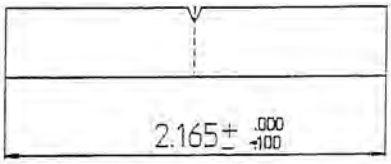

CHARPY IMPACT SPECIMENS

- [ ] FULL SIZE 10MM X 10MM
- [ ] REDUCED

MATERIAL SURFACE

NOTCH ORIENTATION

	OK
1	
2	
3	

	A	B	C	2.165	.010 R +.001 -.001
1					
2					
3					

NOTE: IMPACT SPECIMENS ARE TO BE GROUND TO .394 ±.003 ON SURFACE GRINDER
ASTM E23 CALLS FOR 45 deg. V NOTCH WITH A .010 + or - .001 RADIUS

A DIA.

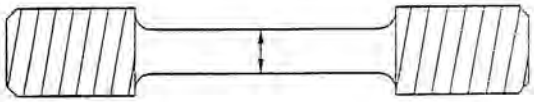

- [x] .500 +.010 -.010
- [ ] .350 +.007 -.007
- [ ] OTHER

A DIA. IS

A	.5001
B	.4985

NOTES / SPECIAL INSTRUCTIONS

TRANSLAB

S.M. INSPECTION REPORT FOR HEAT # 3A

COMPLETED BY M.Z.
DATE: 09-08-08

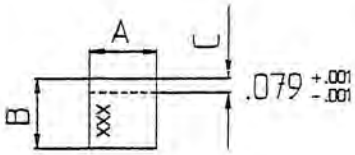

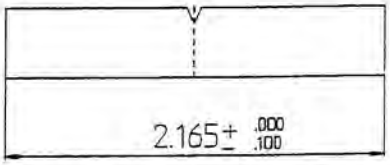

CHARPY IMPACT SPECIMENS

- [ ] FULL SIZE 10MM X 10MM
- [ ] REDUCED

MATERIAL SURFACE

NOTCH ORIENTATION

	OK
1	
2	
3	

	A	B	C	2.165	.010 R +.001 -.001
1					
2					
3					

NOTE: IMPACT SPECIMENS ARE TO BE GROUND TO .394 +.003 -.003 ON SURFACE GRINDER
ASTM E23 CALLS FOR 45 deg. V NOTCH WITH A .010 + or - .001 RADIUS

A DIA.

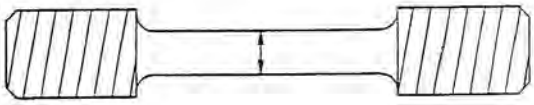

- [x] .500 +.010 -.010
- [ ] .350 +.007 -.007
- [ ] OTHER

A DIA. IS

A	.4994
B	.4996

NOTES / SPECIAL INSTRUCTIONS

DEPARTMENT OF TRANSPORTATION
DIVISION OF ENGINEERING SERVICES
Office of Structural Materials
Quality Assurance and Source Inspection

Bay Area Branch
690 Walnut Ave.St. 150
Vallejo, CA 94592-1133
(707) 649-5453
(707) 649-5493

Contract #: 04-0120F4
Cty: SF/ALA Rte: 80 PM: 13.2/13.9
File #: 76.25B

QUALITY ASSURANCE -- NON-CONFORMANCE REPORT

Location: Dyson Corporation, Painesville, OH **Report No:** NCR-000199
Prime Contractor: American Bridge/Fluor Enterprises, a JV **Date:** 16-Sep-2008
Submitting Contractor: Dyson Corp. & Subs **NCR #:** DYSN-0005

Type of problem:

Welding	☐	**Concrete**	☐	**Other**	☑		
Welding	☐	**Curing**	☐	**Procedural**	☐	**Bridge No:**	34-0006
Joint fit-up	☐	**Coating**	☐	**Other**	☐	**Component:**	E2 Shear Key Bearing Anchor Rod Assemblies
Procedural	☐	**Procedural**	☐	**Descripton:**	Nonconforming Material		

Reference Description: E2 Shear Key A 354 BD Bearing Anchor Rods, A 563 DH Nuts

Description of Non-Conformance:

Trans Lab QA testing determined that Dyson Corporation provided nonconforming material:

1) Anchor rods: 2 heats (of 7 total) did not meet ASTM A 354 Grade BD requirements for elongation, 14% in 2 inches required. Heat Treatment Lot MJF 26 two-sample average: 13.45% (one 14.4%, one 12.5%); Lot MJF 30 two-sample average: 13.45% (one 13.6%, one 13.3%).
2) Nuts: Spherical nuts fabricated to ASTM A 563 material standards had insufficient hardness. A 563 Grade DH nuts require hardness between 24 and 38 on the Rockwell C hardness scale (C24 to C38). The three-nut average hardness was approximately C20, with one as low as C18.07.

This is the third such instance with Dyson since November, 2007.

Applicable reference:
ASTM A 354
ASTM A 563

Who discovered the problem: Trans Lab
Name of individual from Contractor notified: Robert (Bob) Kick
Time and method of notification: 0910, 9/17/2008, telepohne call
Name of Caltrans Engineer notified: Brian Boal
Time and method of notification: 1500, 9/17/2008, face-to-face meeting
QC Inspector's Name: Unknown
Was QC Inspector aware of the problem: ☐ **Yes** ☑ **No**

Contractor's proposal to correct the problem:

Submit RFI to accept rods and nuts "as is." Design approved incorporation of rods with noncompliant elongation; nuts pass tensile test, which overrides the hardness test.

Comments:

QUALITY ASSURANCE -- NON-CONFORMANCE REPORT

This report is for the purpose of determining conformance with the contract documents and is not for the purpose of making repair or fit for purpose recommendations. Should you require recommendations concerning repairs or remedial efforts please contact Venkatesh Iyer,(510) 808-4542, who represents the Office of Structural Materials for your project.

Inspected By:	Petrina,Markian	SMR
Reviewed By:	Iyer,Venkatesh	SMR

REQUEST FOR INFORMATION (RFI)

RFI No.: ABF-RFI-001524R00 **Submitted By:** Kanapicki, Charles **Pages:** 3
Pages Attached: 2

RFI Date: 06-October-2008 **Contact Name:** Kanapicki, Charles **Phone No.** (510) 808-4600

Subject: E2 Shear Key A 354 BD Anchor Rods and A 563 DH Nuts			
References:			
Sub/Sup: DYS	**Sub RFI #:**		
Response Required by: 13-October-2008		**Response affects critical path activity?** No	

Description:

The referenced NCR (attached) identifies of anchor rods spherical nuts with noncompliant elongations and hardness respectively. ABFJV understands from the NCR that "Design approved incorporation of rods with noncompliant elongation; nuts pass tensile test, which overrides the hardness test."

Based on the above, ABFJV respectfully requests the Engineer's approval to accept the rods and nuts in question "as-is."

Contractor Disposition:

This RFI is being submitted for:

The Cost and Time Impact from this RFI is: Not selected

Response: **Agreed Ext. Due Date:**

Pages: 1
Pages Attached: 0

The Contractor's request for approval of the non-compliant rods and nuts in this RFI is granted "as-is."

The Contractor shall ensure that this recurring problem with Dyson non-conformant materials will not arise in the future. Any such noncompliant product furnished is subject to rejection by the Department. The Contractor is encouraged to specify methods, encompassing fabrication and testing, to prevent recurrence of this problem.

In addition, the Contractor is required to submit an NPR to close NCR # DYSN-0005.

Administrative Action:

This response resolves the RFI.

Date: 14-October-2008	**Respondent:** Matin, Ron	**Phone No.:** 510-808-4611

DEPARTMENT OF TRANSPORTATION
DIVISION OF ENGINEERING SERVICES
Office of Structural Materials
Quality Assurance and Source Inspection

Bay Area Branch
690 Walnut Ave.St. 150
Vallejo, CA 94592-1133
(707) 649-5453
(707) 649-5493

Contract #: 04-0120F4
Cty: SF/ALA Rte: 80 PM: 13.2/13.9
File #: xx.25A

QUALITY ASSURANCE -- NON-CONFORMANCE RESOLUTION

Location: Dyson Corporation, Painesville, OH
Prime Contractor: American Bridge/Fluor Enterprises, a JV
Submitting Contractor: Dyson Corp. & Subs

Report No: NCS-000104
Date: 15-Oct-2008
NCR #: DYSN-0005

Type of problem:

Welding	☐	**Concrete**	☐	**Other**	☑	
Welding	☐	**Curing**	☐	**Procedural**	☐	**Bridge No:** 34-0006
Joint fit-up	☐	**Coating**	☐	**Other**	☐	**Component:**
Procedural	☐	**Procedural**	☐	**Descripton:**		

Date the Non-Conformance Report was written: 16-Sep-2008

Description of Non-Conformance:

Trans Lab QA testing determined that Dyson Corporation provided nonconforming material:

1) Anchor rods: 2 heats (of 7 total) did not meet ASTM A 354 Grade BD requirements for elongation, 14% in 2 inches required. Heat Treatment Lot MJF 26 two-sample average: 13.45% (one 14.4%, one 12.5%); Lot MJF 30 two-sample average: 13.45% (one 13.6%, one 13.3%).
2) Nuts: Spherical nuts fabricated to ASTM A 563 material standards had insufficient hardness. A 563 Grade DH nuts require hardness between 24 and 38 on the Rockwell C hardness scale (C24 to C38). The three-nut average hardness was approximately C20, with one as low as C18.07.

This is the third such instance with Dyson since November, 2007.

Contractor's proposal to correct the problem:

Submit RFI to accept rods and nuts "as is."

Corrective action taken:

ABF responded in writing, requesting Department approval of non-conforming material. Design approved incorporation of rods with noncompliant elongation; METS was able to perform tensile test, which the nuts passed, overriding the hardness test per ASTM.

Did corrective action require Engineer's approval? ☑ **Yes** ☐ **No**

If so, name of Engineer providing approval: Brian Boal **Date:** 16-Sep-2008

Is Engineer's approval attached? ☐ **Yes** ☑ **No**

Comments:

This report is for the purpose of determining conformance with the contract documents and is not for the purpose of making repair or fit for purpose recommendations. Should you require recommendations concerning repairs or remedial efforts please contact Ryan Smith, (858) 232-6799, who represents the Office of Structural Materials for your project.

QUALITY ASSURANCE -- NON-CONFORMANCE RESOLUTION

(Continued Page 2 of 2)

Inspected By:	Petrina,Markian	Quality Assurance Inspector
Reviewed By:	Iyer,Venkatesh	QA Reviewer

DEPARTMENT OF TRANSPORTATION
DIVISION OF ENGINEERING SERVICES
Office of Structural Materials
Quality Assurance and Source Inspection

Bay Area Branch
690 Walnut Ave.St. 150
Vallejo, CA 94592-1133
(707) 649-5453
(707) 649-5493

Contract #: 04-0120F4
Cty: SF/ALA Rte: 80 PM: 13.2/13.9
File #: xx.25A

QUALITY ASSURANCE -- NON-CONFORMANCE RESOLUTION

Location: Monnig Industries--Glasgow, Missouri
Prime Contractor: American Bridge/Fluor Enterprises, a JV
Submitting Contractor: Dyson Corp. & Subs

Report No: NCS-000103
Date: 08-Oct-2008
NCR #: DYSN-0004

Type of problem:

Welding	☐	**Concrete**	☐	**Other**	☑	
Welding	☐	**Curing**	☐	**Procedural**	☐	**Bridge No:** 34-0006
Joint fit-up	☐	**Coating**	☐	**Other**	☐	**Component:**
Procedural	☐	**Procedural**	☐	**Descripton:**		

Date the Non-Conformance Report was written: 05-Sep-2008

Description of Non-Conformance:

ABF procured ASTM A 354 BD anchor rod assemblies too late to allow normal release procedures. As a result, QA sampling and shipment occurred simultaneously, and A 354 Grade BD anchor rods and A 563 hex nuts for the E2 Shear Key were shipped to the jobsite without QA testing results or METS release. Time was constrained because these components were ordered on a schedule that led to completion of fabrication only several days before anticipated installation.

In addition, documentation was either missing or incomplete.

Contractor's proposal to correct the problem:

Contractor states that the Department is responsible for schedule difficulties, citing response times for ABF-RFI-1233. Contractor to provide documentation once it is complete.

Corrective action taken:

None taken for lateness; however, METS review of Department response times for ABF-RFI-1233 does not bear out ABF's assertions. ABF aggregate time lapse between completion of Department reviews and ABF follow-up revisions total almost 3 months, including a 63-day lapse between Department return of R01 (4/11/08) and ABF submission of R02 (6/13/08). During the June-July period, ABF submitted R02 through R05, with three one-day and one four-day deadlines; in aggregate, the Department was only one (1) day late during this period, compared to the 17 days of lapses between Department responses and follow-on ABF RFIs. ABF's version of events was refuted in discussions between METS, Construction, and ABF.

ABF provided complete COC packages for all material several weeks following delivery of the components to the job site.

Did corrective action require Engineer's approval?

QUALITY ASSURANCE -- NON-CONFORMANCE RESOLUTION

(Continued Page 2 of 2)

☑ **Yes** ☐ **No**

If so, name of Engineer providing approval: Brian Boal **Date:**

Is Engineer's approval attached? ☐ **Yes** ☑ **No**

Comments:

This report is for the purpose of determining conformance with the contract documents and is not for the purpose of making repair or fit for purpose recommendations. Should you require recommendations concerning repairs or remedial efforts please contact Venkatesh Iyer, (858) 967-6363, who represents the Office of Structural Materials for your project.

Inspected By:	Petrina,Markian	Quality Assurance Inspector
Reviewed By:	Iyer,Venkatesh	QA Reviewer

STATE OF CALIFORNIA-BUSINESS, TRANSPORTATION AND HOUSING AGENCY ARNOLD SCHWARZENEGGER, Governor

DEPARTMENT OF TRANSPORTATION - District 4 Toll Bridge Program
333 Burma Rd.
Oakland, CA 94607
(510) 622-5660, (510) 286-0550 fax

Flex your power
Be energy efficient!

October 31, 2008

Contract No. 04-0120F4
04-SF-80-13.2 / 13.9
Self-Anchored Suspension Bridge
Letter No. 05.03.01-002906

Michael Flowers
Project Executive
American Bridge/Fluor, A JV
375 Burma Road
Oakland, CA 94607

Dear Michael Flowers,

Authority to Proceed – CCO 91 - Additional Magnetic Particle Testing of Anchor Rods/Bolts

In accordance with Section 4-1.03, "Extra Work," of the Standard Specifications, ABF is directed to perform additional Magnetic Particle Testing (MT) in accordance with ASTM specification A490, on cable bracket anchor rods, main cable anchor rods and other ASTM 354, Grade BD anchor rods and bolts to be tensioned in excess of 0.5Fu. This additional work will be covered under Contract Change Order (CCO) No. 91.

The items requiring additional MT include the following:

1. East Saddle tie rod
2. Pier E2 Shear Key - anchor rods connecting stub to the E2 concrete cross beam
3. Pier E2 Shear Key - anchor bolts connecting OBG with shear key housing
4. Spherical Bushing Bearings (Pier E2) - anchor rods connecting hold down to E2 concrete cross beam
5. Spherical Bushing Bearings (Pier E2) - anchor bolts to OBG
6. Spherical Bushing Bearings (Pier E2) -Spherical bushing assembly bolts
7. Cable bracket anchor rods
8. Main Cable anchor rods

Please contact Brian Boal at 510-622-5191 if you have any questions.

Sincerely,

for GARY PURSELL
Resident Engineer

cc: Rick Morrow, Brian Boal, Gary Lai, Scott Fabel, Jinesh Mehta
file: 05.03.01, 49.091

American Bridge / FLUOR
A JOINT VENTURE

375 Burma Road
Oakland, CA 94607 USA
Phone 510-808-4600
Fax 510-808-4601

03-Nov-2008

ABF-CAL-LTR-000731

Mr. Gary Pursell
Resident Engineer
California Department of Transportation
333 Burma Road
Oakland, CA 94607

PROJECT: **San Francisco Oakland Bay SAS Bridge Superstructure**
Caltrans Contract No. 04-0120F4
ABF Job No. 660110

SUBJECT: **AUTHORITY TO PROCEED CCO-091**
ADDITIONAL MAGNETIC PARTICLE TESTING OF ANCHOR RODS/BOLTS
CONFIRMATION OF SCOPE REGARDING EXISTING E2 SHEAR KEY RODS

Gentlemen:

American Bridge/Fluor Enterprises, Inc., Joint Venture (ABFJV) is in receipt of Department Letter No. 05.03.01-002906 dated October 31, 2008 providing Authority to Proceed for CCO-091 regarding additional magnetic particle testing of certain anchor rods/bolts as described therein.

Confirming informal communications between the parties on this date respective to the scope of the above noted CCO, the Department does NOT require the existing ninety (96) Pier E2 Shear Key anchor rods that are already installed within the E2 crossbeam to have the additional testing directed under this CCO to be performed on them.

Should you find anything in the above to the contrary, please advise our office immediately noting the current status of the E2 crossbeam and the intent to place concrete on December 05, 2008.

Sincerely,

AMERICAN BRIDGE/FLUOR ENTERPRISES, INC. A JOINT VENTURE

for Michael D. Flowers
Project Director

File: 01.05.0091, 02.01

American Bridge / FLUOR
A JOINT VENTURE

375 Burma Road
Oakland, CA 94607 USA
Phone (510) 808-4600
Fax (510) 808-4601

SAN FRANCISCO OAKLAND BAY BRIDGE
EAST SPAN SEISMIC SAFETY PROJECT

SELF-ANCHORED SUSPENSION BRIDGE
(Superstructure and Tower)

Caltrans Contract No. 04-0120F4
Bridge No. 34-0006L/R
District 04 County SF Route 80 Kilometer Post 13.2 / 13.9

Submittal ABF- SUB-002756R00:
Pier E2 Bearing and Shear Key Erection Plan: Grout Plan

Prepared By: American Bridge / Fluor Enterprises Inc., A Joint Venture

Date: October 15, 2012
Revision 0

TABLE OF CONTENTS

DESCRIPTION	PAGES
Pier E2 Bearing and Shear Key Grout Plan Written Outline	1
Pier E2 Bearing and Shear Key Grout Plan Drawings (DE352AJ through DE352J)	9
Grouting Material and Equipment Catalog Cuts	14
Skyway and SAS Structure Loading Calculations	49

REGISTERED PROFESSIONAL ENGINEER
KEVIN M. SMITH
No. C 62218
Exp. 9/30/13
CIVIL
STATE OF CALIFORNIA

American Bridge / FLUOR
A JOINT VENTURE

PROJECT: San Francisco Oakland Bay SAS Bridge Superstructure

SUBJECT: Pier E2 Bearing and Shear Key Erection Plan: Grout Plan

In accordance with Special Provisions Section 10-1.56, "High Strength Nonshrink Grout", subsection "Working Drawings", American Bridge / Fluor Enterprises, Inc., A Joint Venture (ABFJV) provides herein the E2 Bearing and Shear Key grouting plan.

The intent of this plan is to provide the plan for grouting the anchor rod ducts and baseplates of all E2 Bearings and Shear Keys.

Section 1: General Overview

1.1. The Self Anchored Suspension Bridge (SAS) consists of four (4) Shear Keys and four (4) Bearings. One (1) Shear Key and two (2) Bearings are centered about both E and W Lines and two (2) Shear Keys are centered about the centerline of Crossbeam 18.

1.2. Bearing and Shear Key grouting will consist of two (2) separate stages required to place grout at both the anchor rods and baseplates of all Bearings and Shear Keys.

1.2.1. Stage 1: Anchor rod grouting.

1.2.2. Stage 2: Baseplate grouting.

Section 2: General Notes

2.1. See SWPPP (Storm Water Pollution Prevention Plan) future amendment for applicable SWPPP measures.

Section 3: Grouting Plan

Refer to sheets DE352AJ – DE352J for Grouting Plan and details.

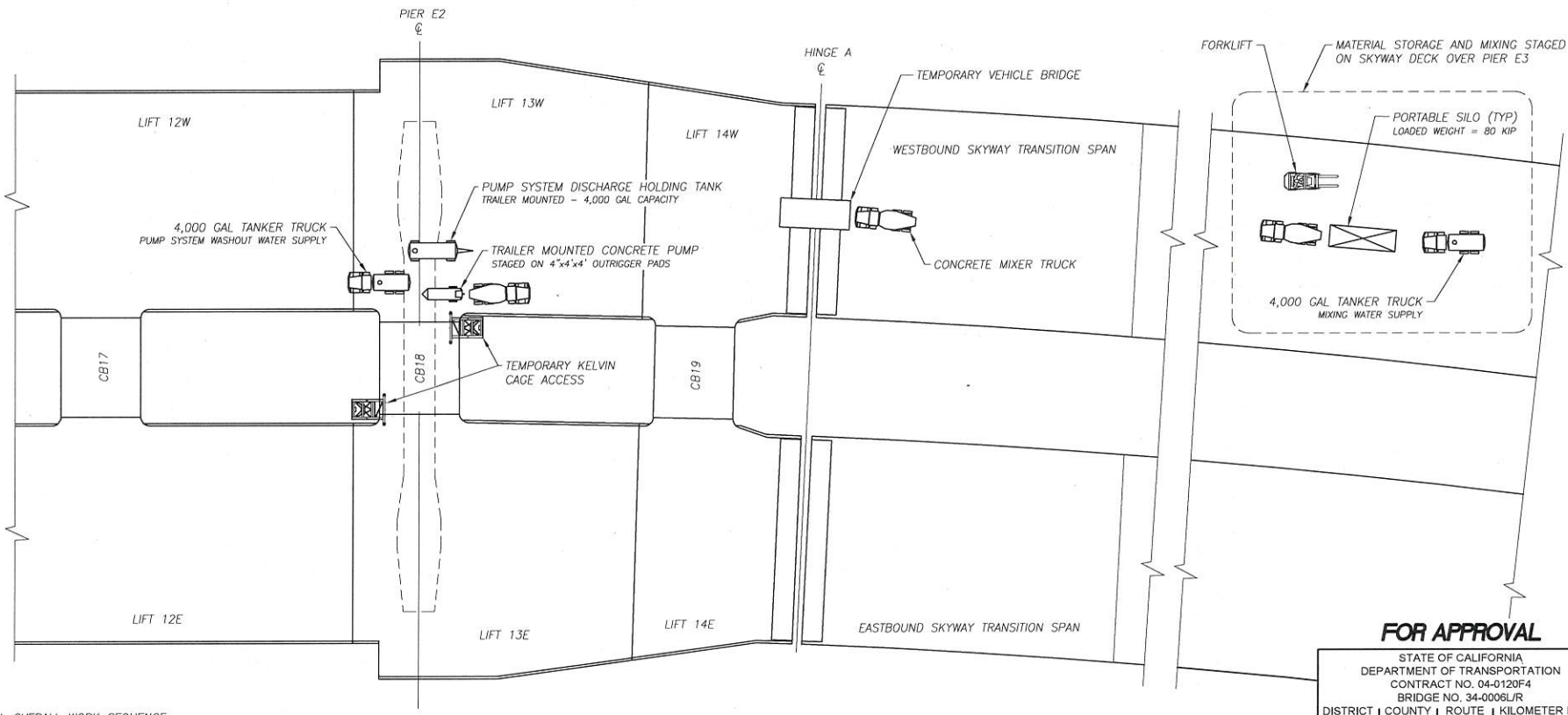

GENERAL OVERALL WORK SEQUENCE:

1. ALIGN AND INSTALL HINGE A PIPE BEAMS (REFERENCE SUBMITTAL ABF-SUB-002039).
2. PERFORM FINAL MEASUREMENT AND ELEVATION ALIGNMENT OF E2 SHEAR KEY STUBS ACCORDING TO ABF-SUB-002677 AND ABF-RFI-003006.
   2.1. INSTALL SHIMS BETWEEN BEARING AND SHEAR KEY BASEPLATES AND TOP OF PIER E2 CONCRETE TO MAINTAIN VERTICAL ALIGNMENT.
2. RAISE AND INSTALL E2 BEARING AND SHEAR KEY ANCHOR RODS.
3. INSTALL ALL GROUT INJECTION SYSTEMS FOR ALL ANCHOR ROD LOCATIONS.
4. STAGE AND LOAD ALL MATERIAL STORAGE, MIXING, AND PUMPING EQUIPMENT ON SKYWAY AND SAS TOP DECK.
5. MIX AND PLACE GROUT AT ALL BEARING AND SHEAR KEY ANCHOR ROD DUCT LOCATIONS.
   5.1. FOR ANCHOR ROD GROUTING PROCEDURE SEE SHEET DE352CJ.
6. INSTALL FORMWORK AROUND ALL BEARING AND SHEAR KEY BASEPLATES.
7. MIX AND PLACE GROUT AT ALL BEARING AND SHEAR KEY BASEPLATE LOCATIONS.
   7.1. FOR BASEPLATE GROUTING PROCEDURE SEE SHEET DE352J.
8. STRESS ALL BEARING AND SHEAR KEY ANCHOR RODS (REFERENCE SUBMITTAL ABF-SUB-002757).

GENERAL NOTES:

1. ALL EQUIPMENT LOCATIONS AND TYPES SHOWN IN THIS PLAN ARE SCHEMATIC. EQUIPMENT LOCATIONS, ARRANGEMENTS, AND TYPES MAY BE MODIFIED TO SUIT FIELD CONDITIONS (WITH APPROVAL OF ABFJV ENGINEER OF RECORD).

E2 BEARING AND SHEAR KEY GROUTING PLAN

GENERAL PLAN VIEW AND EQUIPMENT LAYOUT

REV	DATE	DWG BY	DWG CHK	DSGN BY	DSGN CHK	DESCRIPTION
6						
5						
4						
3						
2						
1						

REGISTERED PROFESSIONAL ENGINEER
KELVIN M. SMITH
No. C 62218
Exp. 9/30/13
CIVIL
STATE OF CALIFORNIA

FOR APPROVAL

STATE OF CALIFORNIA
DEPARTMENT OF TRANSPORTATION
CONTRACT NO. 04-0120F4
BRIDGE NO. 34-0006L/R

DISTRICT	COUNTY	ROUTE	KILOMETER POST
04	SF	80	13.2 / 13.9

SAN FRANCISCO OAKLAND BAY BRIDGE
EAST SPAN SEISMIC SAFETY PROJECT
SELF ANCHORED SUSPENSION BRIDGE
(SUPERSTRUCTURE AND TOWER)

E2 BEARING AND SHEAR KEY
ERECTION PLAN: GROUTING
GENERAL PLAN LAYOUT

American Bridge / FLUOR
A JOINT VENTURE

Design By:	Z. LAURIA	Date:	9/21/12
Design Chk:	K. SMITH	Date:	10/2/12
Drawn By:	Z. LAURIA	Date:	9/23/12
Drawing Chk:	K. SMITH	Date:	10/2/12
In Charge Of:	R. KICK		
Job No.	660110	Sheet No.	DE352AJ
Scale:	NTS	Revision:	0

Oct 15, 2012 – 9:27am Y:\D300 E2 and W2\Submittals\Submittal 002756R00 – E2 Bearing and Shear Key Erection Plan – GROUT PLAN\Drawings\DWG\DE352A-R00.dwg

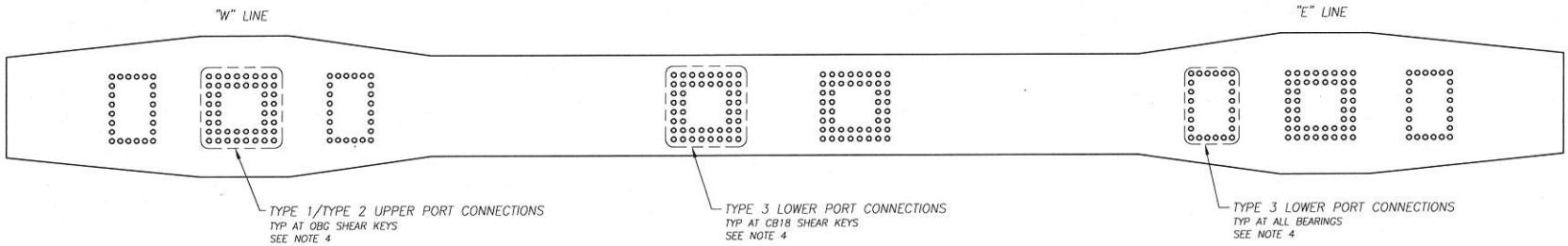

E2 BEARING AND SHEAR KEY ANCHOR ROD DUCT LAYOUT

PIER E2 PLAN AT TOP OF CONCRETE

GROUT MATERIAL DETAILS:

1. ANCHOR ROD DUCT GROUT MATERIAL: BASF MASTERFLOW 1205.
   1.1. INITIAL TARGET EFFLUX: 15 sec.
   1.2. EFFLUX TIME MAY BE ADJUSTED TO SUIT JOBSITE CONDITIONS AT TIME OF PLACEMENT IN ACCORDANCE WITH MANUFACTURER'S PRODUCT DATA.
2. BASEPLATE GROUT MATERIAL: BASF MASTERFLOW 928.
   2.1. INITIAL TARGET EFFLUX: 25 sec.
   2.2. EFFLUX TIME MAY BE ADJUSTED TO SUIT JOBSITE CONDITIONS AT TIME OF PLACEMENT IN ACCORDANCE WITH MANUFACTURER'S PRODUCT DATA.
3. SAMPLING SCHEDULE:
   3.1. A REPRESENTATIVE SAMPLE OF BATCHED GROUT MATERIAL WILL BE TAKEN FOR EACH BEARING AND SHEAR KEY ANCHOR ROD PATTERN AND BASEPLATE.
   3.2. REPRESENTATIVE SAMPLES WILL CONSIST OF (12) COMPRESSIVE STRENGTH SPECIMENS.
   3.3. A TOTAL OF (96) COMPRESSIVE STRENGTH SPECIMENS WILL BE CAST FOR ANCHOR ROD GROUT MATERIAL.
   3.4. A TOTAL OF (96) COMPRESSIVE STRENGTH SPECIMENS WILL BE CAST FOR BASEPLATE GROUT MATERIAL.
4. COMPRESSIVE STRENGTH TESTING SCHEDULE (FOR EACH REPRESENTATIVE SAMPLE):
   4.1. (3) AT 3 DAYS
   4.2. (3) AT 7 DAYS
   4.3. (3) AT 56 DAYS
   4.4. (3) HOLD

NOTES:

1. SEE GENERAL NOTES ON SHEET DE352AJ.
2. FOR STAGE 1: ANCHOR ROD DUCT GROUTING DETAILS SEE SHEETS DE352CJ–DE352GJ.
3. FOR STAGE 2: BASEPLATE GROUTING DETAILS SEE SHEETS DE352HJ–DE352J.
4. FOR TYPE 1, 2, AND 3 PORT CONNECTION DETAILS SEE SHEET DE352DJ.

FOR APPROVAL

STATE OF CALIFORNIA
DEPARTMENT OF TRANSPORTATION
CONTRACT NO. 04-0120F4
BRIDGE NO. 34-0006L/R

DISTRICT	COUNTY	ROUTE	KILOMETER POST
04	SF	80	13.2 / 13.9

SAN FRANCISCO OAKLAND BAY BRIDGE
EAST SPAN SEISMIC SAFETY PROJECT
SELF ANCHORED SUSPENSION BRIDGE
(SUPERSTRUCTURE AND TOWER)

E2 BEARING AND SHEAR KEY
ERECTION PLAN: GROUTING
LAYOUT AND MATERIAL DETAILS

REGISTERED PROFESSIONAL ENGINEER
KEVIN M. SMITH
No. C 62218
Exp. 7/30/13
CIVIL
STATE OF CALIFORNIA

American Bridge / FLUOR
A JOINT VENTURE

Design By:	Z. LAURIA	Date:	9/21/12
Design Chk:	K. SMITH	Date:	10/2/12
Drawn By:	Z. LAURIA	Date:	9/28/12
Drawing Chk:	K. SMITH	Date:	10/2/12
In Charge Of:	R. KICK		
Job No. 660110		Sheet No. DE352BJ	
Scale: NTS		Revision: 0	

REV	DATE	DWG BY	DWG CHK	DSGN BY	DSGN CHK	DESCRIPTION
6						
5						
4						
3						
2						
1						

Oct 15, 2012 – 9:22am Y:\0300 E2 and W2\Submittals\Submittal 002756R00 – E2 Bearing and Shear Key Erection Plan – GROUT PLAN\Drawings\DWG\DE352A–R00.dwg

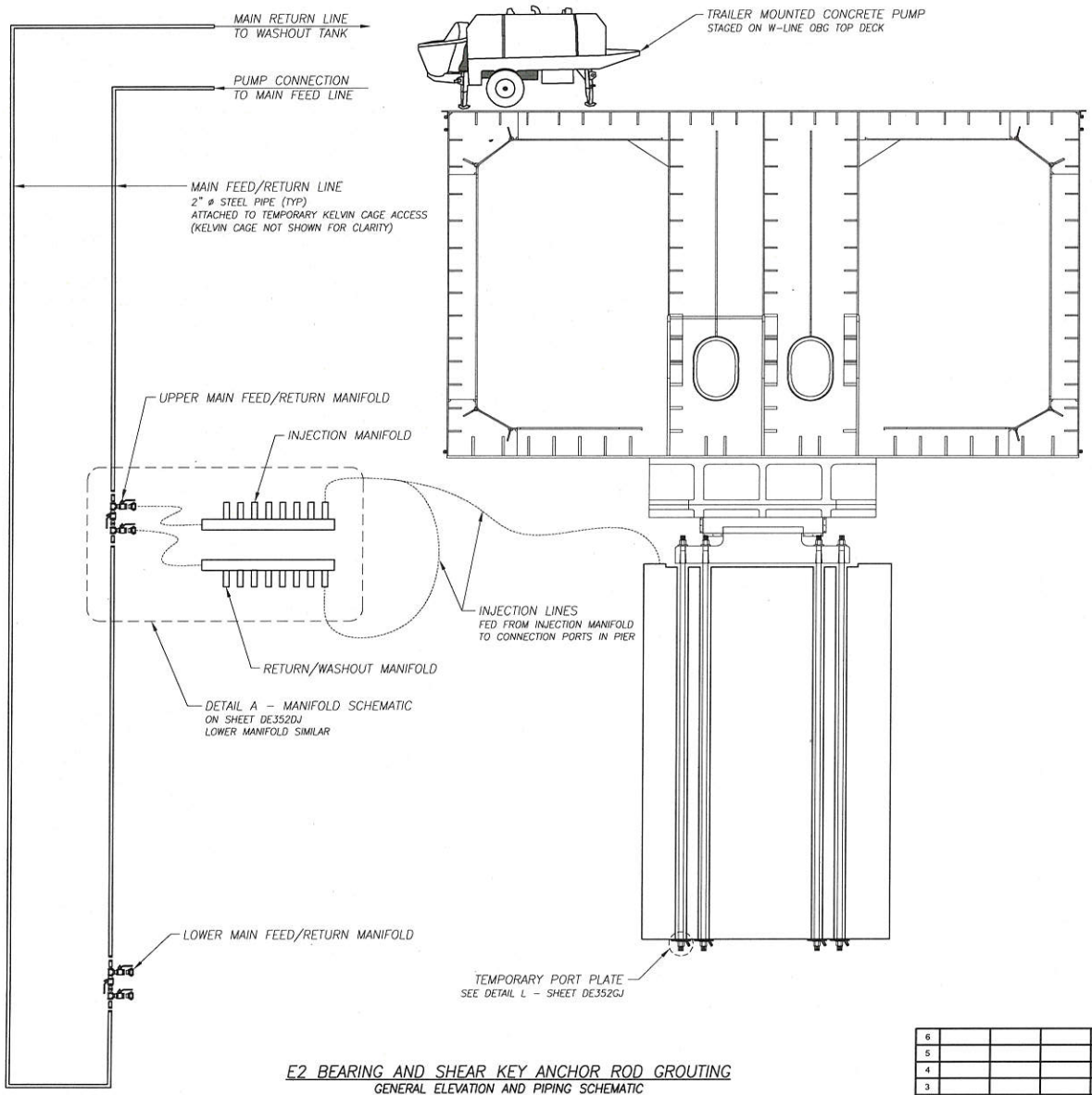

E2 BEARING AND SHEAR KEY ANCHOR ROD GROUTING

GENERAL ELEVATION AND PIPING SCHEMATIC

ANCHOR ROD GROUTING PROCEDURE:

1. ERECT MAIN FEED/RETURN LINES AND MANIFOLDS.
2. INSTALL ALL INJECTION AND RETURN MANIFOLDS COMPLETE WITH ALL INJECTION HOSE AND PORT CONNECTION HARDWARE.
3. REMOVE PERMANENT BEARING BLOCKS AND INSTALL TEMPORARY PORT PLATE ON LOWER END OF ALL EXPOSED ANCHOR RODS.
4. STAGE AND LOAD ALL MATERIAL STORAGE, MIXING, PUMPING, AND WATER STORAGE EQUIPMENT ACCORDING TO LAYOUT ON SHEET DE352AJ.
5. BEGIN MIXING AND PUMPING GROUT INTO MAIN FEED LINE AND THROUGH INJECTION EQUIPMENT TO FILL ANCHOR ROD DUCTS.
   - 5.1. ALL DUCTS WILL BE FILLED TO ~2 INCHES BELOW TOP OF DUCT.
   - 5.2. EACH DUCT WILL BE COMPLETELY FILLED TO REQUIRED LEVEL CONTINUOUSLY IN ONE POUR.
   - 5.3. UP TO (8) DUCTS MAY BE FILLED SIMULTANEOUSLY WITH INJECTION EQUIPMENT.
   - 5.4. TOP OF DUCTS BEING FILLED WILL BE VISUALLY MONITORED FOR FILL LEVEL. ONCE REQUIRED LEVEL HAS BEEN REACHED IN A DUCT, THE CORRESPONDING INJECTION LINE WILL BE CLOSED. DO NOT OVERFILL DUCTS.
6. UPON COMPLETION OF INJECTION OPERATION, INJECTION LINES WILL BE CONNECTED TO RETURN MANIFOLD AND ENTIRE SYSTEM WILL BE FLUSHED WITH WATER THROUGH RETURN/WASHOUT SYSTEM.
   - 6.1. FLUSHED GROUT MATERIAL AND WASHOUT WATER WILL BE PUMPED INTO WASHOUT TANKS STAGED ON OBG TOP DECK THROUGH MAIN RETURN/WASHOUT LINE.
7. REMOVE TEMPORARY PORT PLATE AND RE-INSTALL PERMANENT BEARING BLOCKS ON LOWER END OF ALL EXPOSED ANCHOR RODS.

NOTES:

1. SEE GENERAL NOTES ON SHEET DE352AJ.
2. SEE SHEET DE352BJ FOR GROUT MATERIAL DETAILS.
3. WATER SOAKING OR FLUSHING OF ANCHOR ROD DUCTS PRIOR TO PLACEMENT WILL NOT BE REQUIRED FOR ANCHOR ROD GROUT PLACEMENT.

FOR APPROVAL

STATE OF CALIFORNIA
DEPARTMENT OF TRANSPORTATION
CONTRACT NO. 04-0120F4
BRIDGE NO. 34-0006L/R

DISTRICT	COUNTY	ROUTE	KILOMETER POST
04	SF	80	13.2 / 13.9

SAN FRANCISCO OAKLAND BAY BRIDGE
EAST SPAN SEISMIC SAFETY PROJECT
SELF ANCHORED SUSPENSION BRIDGE
(SUPERSTRUCTURE AND TOWER)

E2 BEARING AND SHEAR KEY
ERECTION PLAN: GROUTING
ANCHOR ROD ELEVATION

American Bridge / FLUOR
A JOINT VENTURE

REGISTERED PROFESSIONAL ENGINEER
KELVIN M. SMITH
No. C 62218
Exp. 9/30/13
CIVIL
STATE OF CALIFORNIA

6						
5						
4						
3						
2						
1						
REV	DATE	DWG BY	DWG CHK	DSGN BY	DSGN CHK	DESCRIPTION

Design By:	Z. LAURIA	Date:	9/21/12
Design Chk:	K. SMITH	Date:	10/2/12
Drawn By:	Z. LAURIA	Date:	9/28/12
Drawing Chk:	K. SMITH	Date:	10/2/12
In Charge Of:	R. KICK		
Job No. 660110		Sheet No. DE352CJ	
Scale: NTS		Revision: 0	

Oct 15, 2012 – 9:29am Y:\D300 E2 and W2\Submittals\Submittal 002756R00 – E2 Bearing and Shear Key Erection Plan – GROUT PLAN\Drawings\DWG\DE352A-R00.dwg

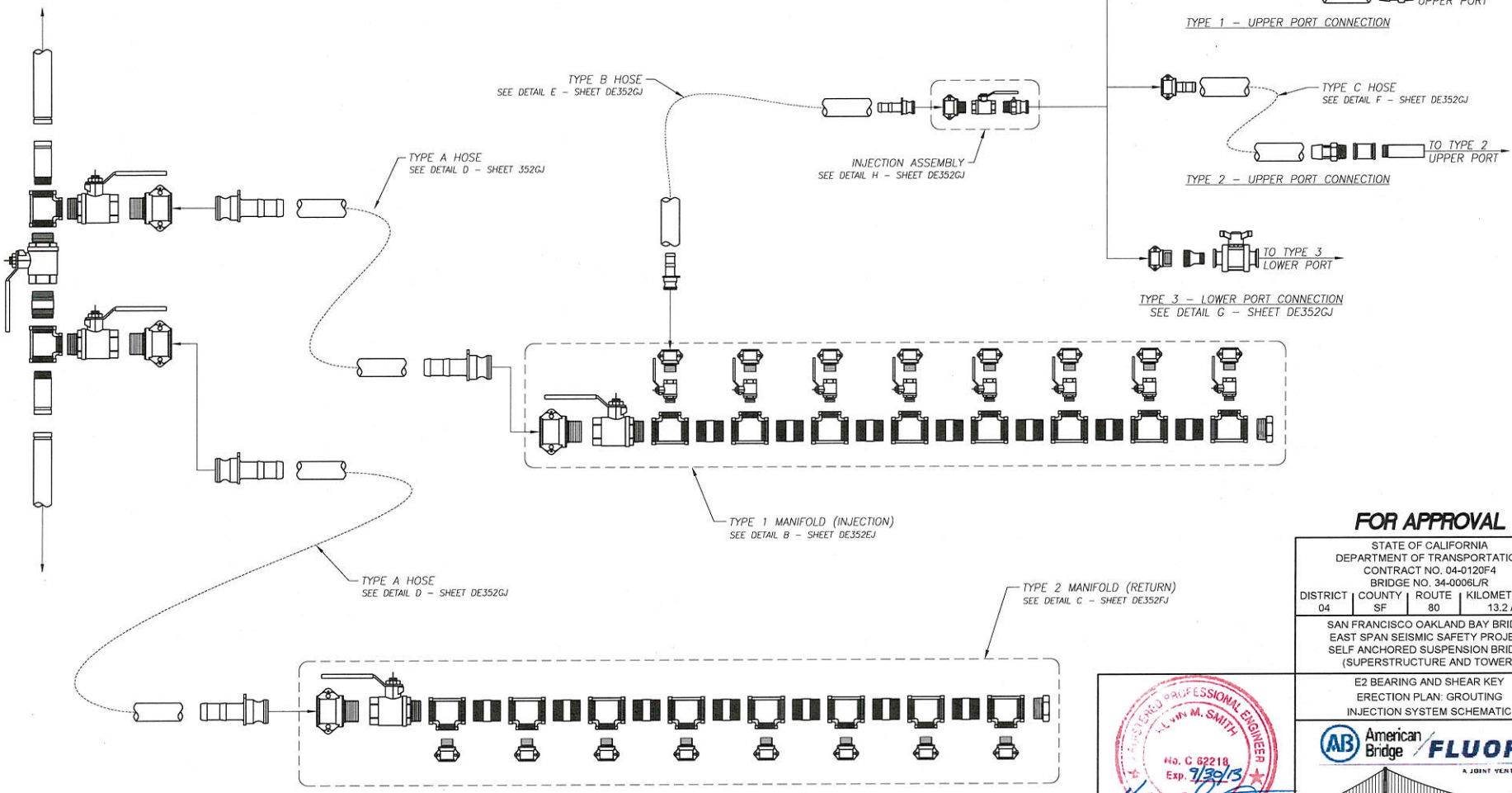

DETAIL A – MANIFOLD SCHEMATIC
(FROM SHEET DE352CJ)

FOR APPROVAL

STATE OF CALIFORNIA
DEPARTMENT OF TRANSPORTATION
CONTRACT NO. 04-0120F4
BRIDGE NO. 34-0006L/R

DISTRICT	COUNTY	ROUTE	KILOMETER POST
04	SF	80	13.2 / 13.9

SAN FRANCISCO OAKLAND BAY BRIDGE
EAST SPAN SEISMIC SAFETY PROJECT
SELF ANCHORED SUSPENSION BRIDGE
(SUPERSTRUCTURE AND TOWER)

E2 BEARING AND SHEAR KEY
ERECTION PLAN: GROUTING
INJECTION SYSTEM SCHEMATIC

REGISTERED PROFESSIONAL ENGINEER
KEVIN M. SMITH
No. C 62218
Exp. 9/30/13
CIVIL
STATE OF CALIFORNIA

American Bridge / FLUOR
A JOINT VENTURE

Design By:	Z. LAURIA	Date:	9/21/12
Design Chk:	K. SMITH	Date:	10/2/12
Drawn By:	Z. LAURIA	Date:	9/28/12
Drawing Chk:	K. SMITH	Date:	10/2/12
In Charge Of:	R. KICK		
Job No.	660110	Sheet No.	DE352DJ
Scale:	NTS	Revision:	0

REV	DATE	DWG BY	DWG CHK	DSGN BY	DSGN CHK	DESCRIPTION
6						
5						
4						
3						
2						
1						

Oct 15, 2012 – 7:46am Y:\300 E2 and W2\Submittals\Submittal 002756R00 – E2 Bearing and Shear Key Erection Plan – GROUT PLAN\Drawings\DWG\DE352A-R00.dwg

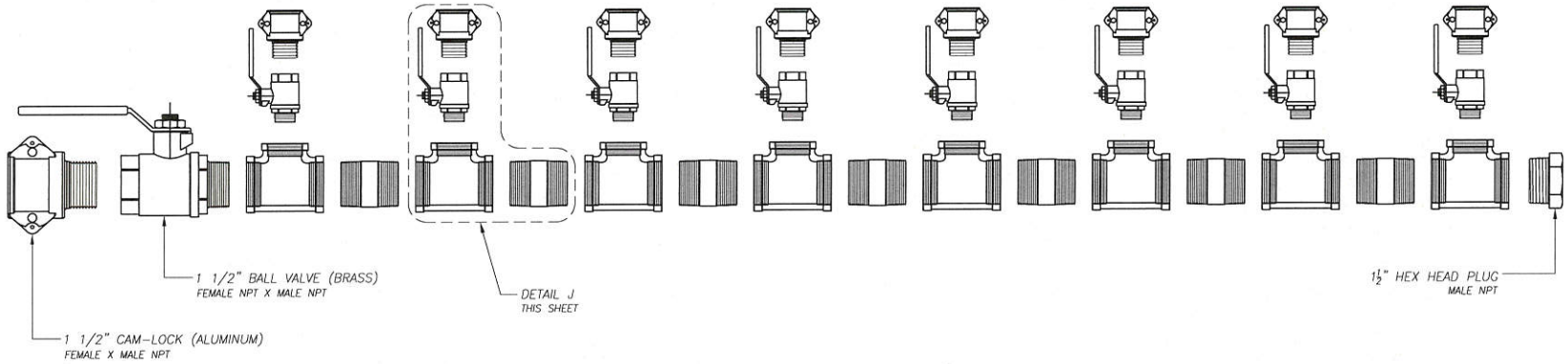

DETAIL B – TYPE 1 MANIFOLD [QTY=2]
(FROM SHEET DE352DJ)

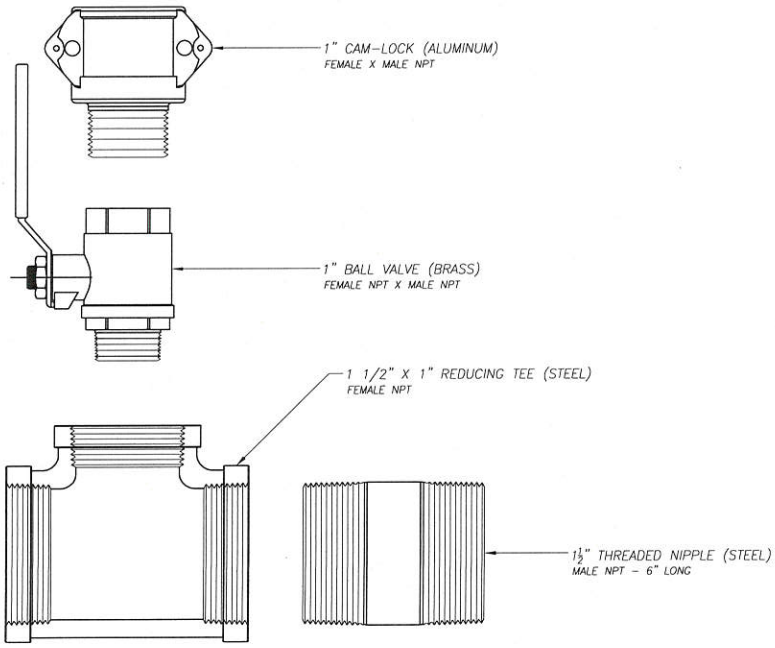

DETAIL J – MANIFOLD CONNECTION ASSEMBLY
(TYPICAL ALL LOCATIONS FOR TYPE 1 MANIFOLD)

FOR APPROVAL

STATE OF CALIFORNIA
DEPARTMENT OF TRANSPORTATION
CONTRACT NO. 04-0120F4
BRIDGE NO. 34-0006L/R

DISTRICT	COUNTY	ROUTE	KILOMETER POST
04	SF	80	13.2 / 13.9

SAN FRANCISCO OAKLAND BAY BRIDGE
EAST SPAN SEISMIC SAFETY PROJECT
SELF ANCHORED SUSPENSION BRIDGE
(SUPERSTRUCTURE AND TOWER)

E2 BEARING AND SHEAR KEY
ERECTION PLAN: GROUTING
TYPE 1 MANIFOLD DETAILS

REGISTERED PROFESSIONAL ENGINEER
KEVIN M. SMITH
No. C 62218
Exp. 9/30/13
CIVIL
STATE OF CALIFORNIA

American Bridge / FLUOR
A JOINT VENTURE

6						
5						
4						
3						
2						
1						
REV	DATE	DWG BY	DWG CHK	DSGN BY	DSGN CHK	DESCRIPTION

Design By:	Z. LAURIA	Date:	9/21/12
Design Chk:	K. SMITH	Date:	10/2/12
Drawn By:	Z. LAURIA	Date:	9/28/12
Drawing Chk:	K. SMITH	Date:	10/2/12
In Charge Of:	R. KICK		
Job No.	660110	Sheet No.	DE352EJ
Scale:	NTS	Revision:	0

Oct 15, 2012 – 7:47am Y:\300 E2 and W2\Submittals\Submittal 002756R00 – E2 Bearing and Shear Key Erection Plan – GROUT PLAN\Drawings\DWG\DE352A-R00.dwg

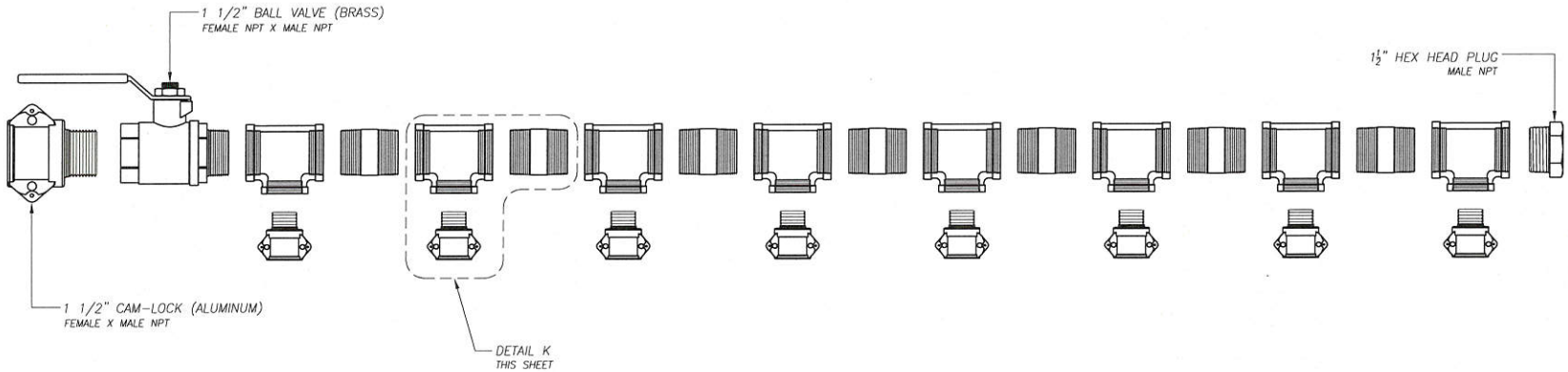

DETAIL C – TYPE 2 MANIFOLD [QTY=1]
(FROM SHEET DE352DJ)

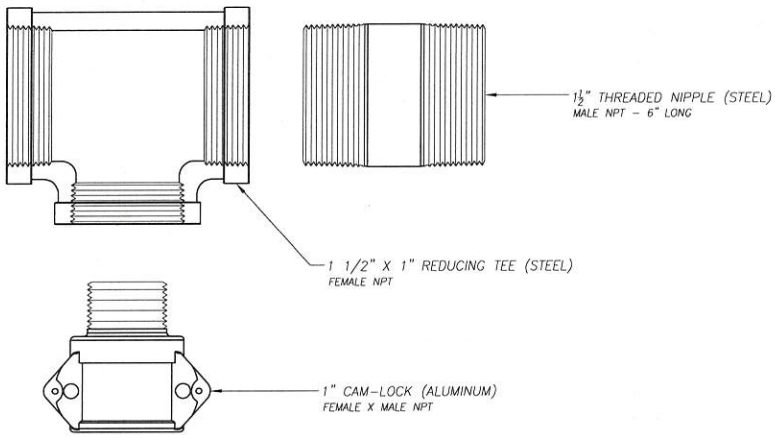

DETAIL K – MANIFOLD CONNECTION ASSEMBLY
(TYPICAL ALL LOCATIONS FOR TYPE 2 MANIFOLD)

FOR APPROVAL

STATE OF CALIFORNIA
DEPARTMENT OF TRANSPORTATION
CONTRACT NO. 04-0120F4
BRIDGE NO. 34-0006L/R

DISTRICT	COUNTY	ROUTE	KILOMETER POST
04	SF	80	13.2 / 13.9

SAN FRANCISCO OAKLAND BAY BRIDGE
EAST SPAN SEISMIC SAFETY PROJECT
SELF ANCHORED SUSPENSION BRIDGE
(SUPERSTRUCTURE AND TOWER)

E2 BEARING AND SHEAR KEY
ERECTION PLAN: GROUTING
TYPE 2 MAINFOLD DETAILS

REGISTERED PROFESSIONAL ENGINEER
KELVIN M. SMITH
No. C 62218
Exp. 9/30/13
CIVIL
STATE OF CALIFORNIA

American Bridge / FLUOR
A JOINT VENTURE

Design By:	Z. LAURIA	Date:	9/21/12
Design Chk:	K. SMITH	Date:	10/2/12
Drawn By:	Z. LAURIA	Date:	9/28/12
Drawing Chk:	K. SMITH	Date:	10/2/12
In Charge Of:	R. KICK		

Job No.	Sheet No.
660110	DE352FJ
Scale: NTS	Revision: 0

REV	DATE	DWG BY	DWG CHK	DSGN BY	DSGN CHK	DESCRIPTION
6						
5						
4						
3						
2						
1						

Oct 15, 2012 – 7:48am Y:\300 E2 and W2\Submittals\Submittal 002756R00 – E2 Bearing and Shear Key Erection Plan – GROUT PLAN\Drawings\DWG\DE352A-R00.dwg

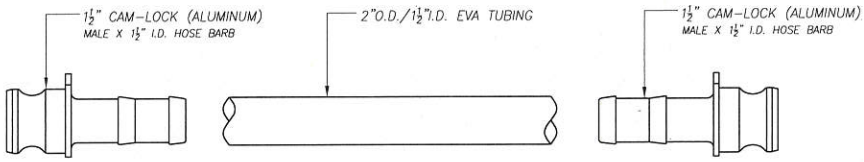

DETAIL D – TYPE A HOSE
[QTY=4] @ 50' LONG

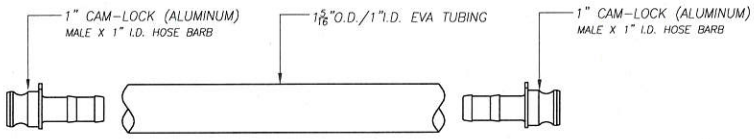

DETAIL E – TYPE B HOSE
[QTY=16] @ 10' LONG

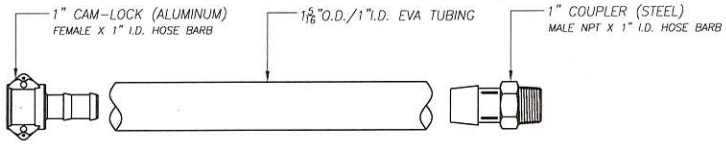

DETAIL F – TYPE C HOSE
[QTY=24] @ 1' LONG

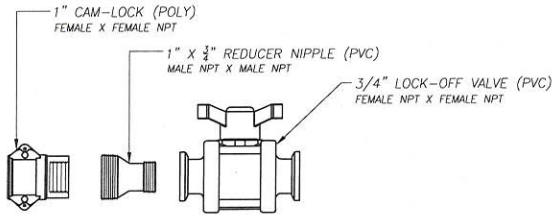

DETAIL G – TYPE 3 LOWER PORT CONNECTOR
[QTY=210] ASSEMBLIES

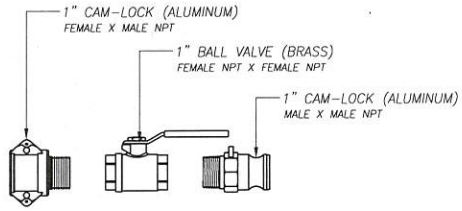

DETAIL H – INJECTION ASSEMBLY
[QTY=16] ASSEMBLIES

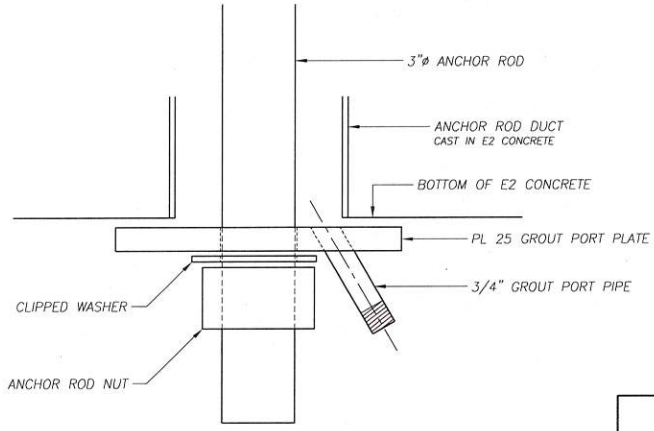

DETAIL L –TYPE 3 LOWER PORT PLATE ASSEMBLY
[QTY=200] ASSEMBLIES

FOR APPROVAL

STATE OF CALIFORNIA
DEPARTMENT OF TRANSPORTATION
CONTRACT NO. 04-0120F4
BRIDGE NO. 34-0006L/R

DISTRICT	COUNTY	ROUTE	KILOMETER POST
04	SF	80	13.2 / 13.9

SAN FRANCISCO OAKLAND BAY BRIDGE
EAST SPAN SEISMIC SAFETY PROJECT
SELF ANCHORED SUSPENSION BRIDGE
(SUPERSTRUCTURE AND TOWER)

E2 BEARING AND SHEAR KEY
ERECTION PLAN: GROUTING
PIPING COMPONENT DETAILS

REGISTERED PROFESSIONAL ENGINEER
KEVIN M. SMITH
No. C 62218
Exp. 9/30/13
CIVIL
STATE OF CALIFORNIA

American Bridge / FLUOR
A JOINT VENTURE

Design By:	Z. LAURIA	Date:	9/21/12
Design Chk:	K. SMITH	Date:	10/2/12
Drawn By:	Z. LAURIA	Date:	9/28/12
Drawing Chk:	K. SMITH	Date:	10/2/12
In Charge Of:	R. KICK		
Job No. 660110		Sheet No. DE352GJ	
Scale: NTS		Revision: 0	

REV	DATE	DWG BY	DWG CHK	DSGN BY	DSGN CHK	DESCRIPTION
6						
5						
4						
3						
2						
1						

Oct 15, 2012 – 7:48am Y:\300 E2 and W2\Submittals\Submittal 002756R00 – E2 Bearing and Shear Key Erection Plan – GROUT PLAN\Drawings\DWG\DE352A-R00.dwg

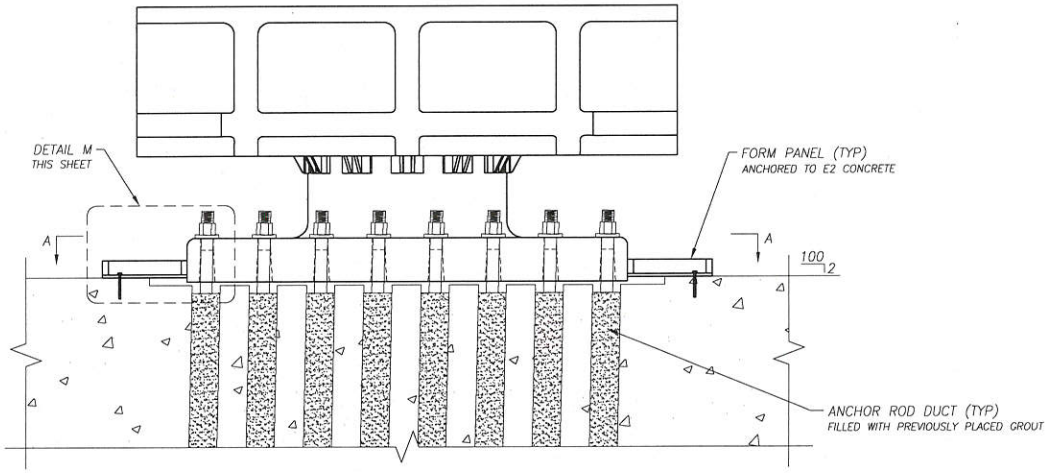

E2 SHEAR KEY – BASEPLATE GROUTING

TYPICAL ELEVATION DETAIL AT TOP OF PIER E2 CONCRETE

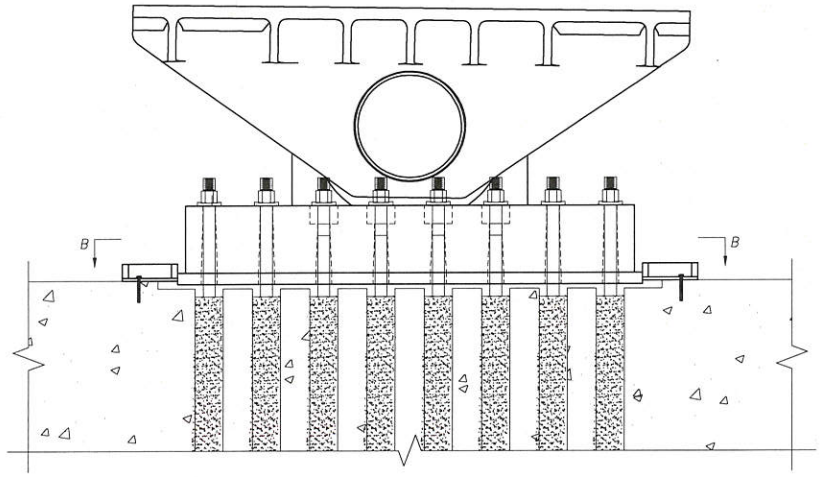

E2 BEARING – BASEPLATE GROUTING

TYPICAL ELEVATION DETAIL AT TOP OF PIER E2 CONCRETE

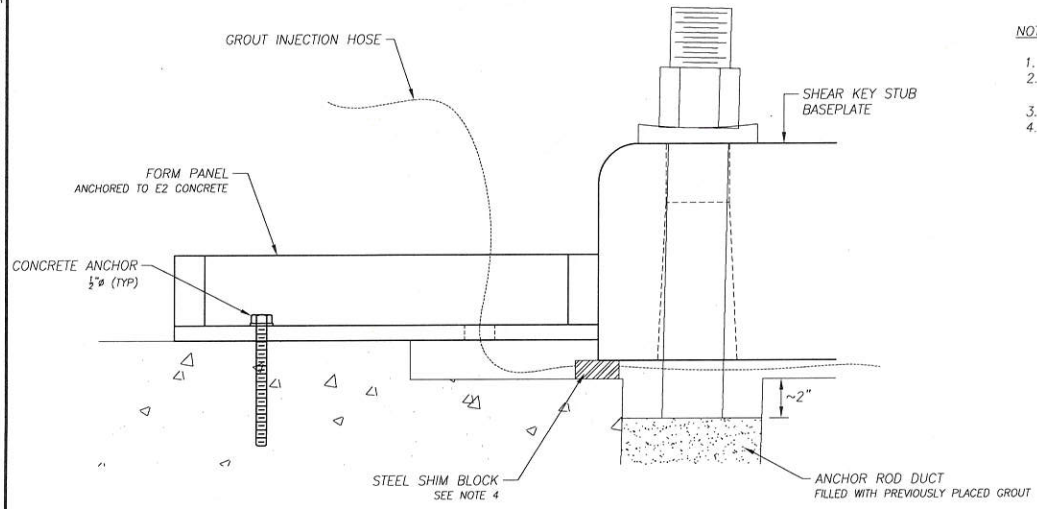

DETAIL M – HIGH SIDE FORM PANEL

NOTES:

1. SEE GENERAL NOTES ON SHEET DE352AJ
2. BASEPLATE GROUTING WILL BE PERFORMED AFTER ANCHOR ROD GROUTING IS COMPLETED.
3. FOR SECTION "A–A" AND "B–B" SEE SHEET DE352J
4. STEEL SHIM REQUIRED BETWEEN BOTTOM OF BASEPLATE AND TOP OF E2 CONCRETE TO MAINTAIN VERTICAL ADJUSTMENT DURING ROD INSTALLATION AND GROUTING OPERATION. SHIMS WILL BE LEFT IN PLACE DURING GROUTING AND CAST IN BASEPLATE GROUT PAD.

FOR APPROVAL

STATE OF CALIFORNIA
DEPARTMENT OF TRANSPORTATION
CONTRACT NO. 04-0120F4
BRIDGE NO. 34-0006L/R

DISTRICT	COUNTY	ROUTE	KILOMETER POST
04	SF	80	13.2 / 13.9

SAN FRANCISCO OAKLAND BAY BRIDGE
EAST SPAN SEISMIC SAFETY PROJECT
SELF ANCHORED SUSPENSION BRIDGE
(SUPERSTRUCTURE AND TOWER)

E2 BEARING AND SHEAR KEY
ERECTION PLAN: GROUTING
BASEPLATE GROUTING DETAILS

REGISTERED PROFESSIONAL ENGINEER
KEVIN M. SMITH
No. C 62218
Exp. 9/30/13
CIVIL
STATE OF CALIFORNIA

American Bridge / FLUOR
A JOINT VENTURE

Design By:	Z. LAURIA	Date:	9/21/12
Design Chk:	K. SMITH	Date:	10/2/12
Drawn By:	Z. LAURIA	Date:	9/28/12
Drawing Chk:	K. SMITH	Date:	10/2/12
In Charge Of:	R. KICK		
Job No.	660110	Sheet No.	DE352HJ
Scale:	NTS	Revision:	0

REV	DATE	DWG BY	DWG CHK	DSGN BY	DSGN CHK	DESCRIPTION
6						
5						
4						
3						
2						
1						

Oct 15, 2012 – 9:30am Y:\300 E2 and W2\Submittals\Submittal 002756R00 – E2 Bearing and Shear Key Erection Plan – GROUT PLAN\Drawings\DWG\DE352A-R00.dwg

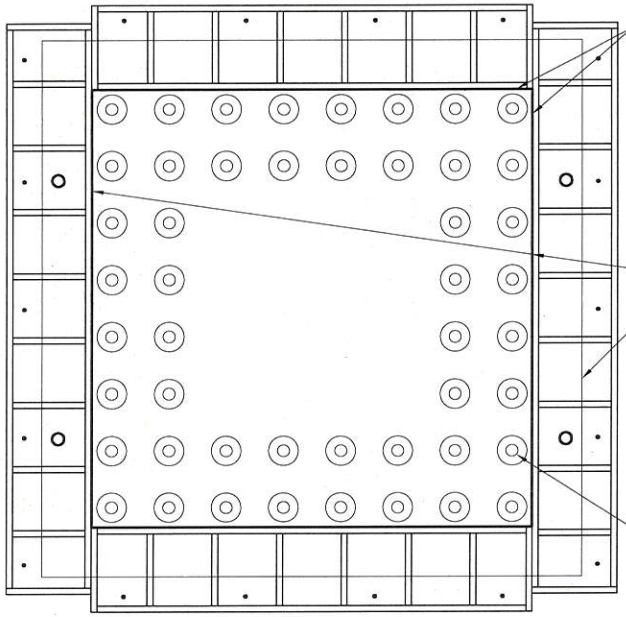

SECTION A – SHEAR KEY BASEPLATE GROUT FORM LAYOUT
PLAN VIEW AT TOP OF PIER E2 CONCRETE
(FROM SHEET DE352HJ)

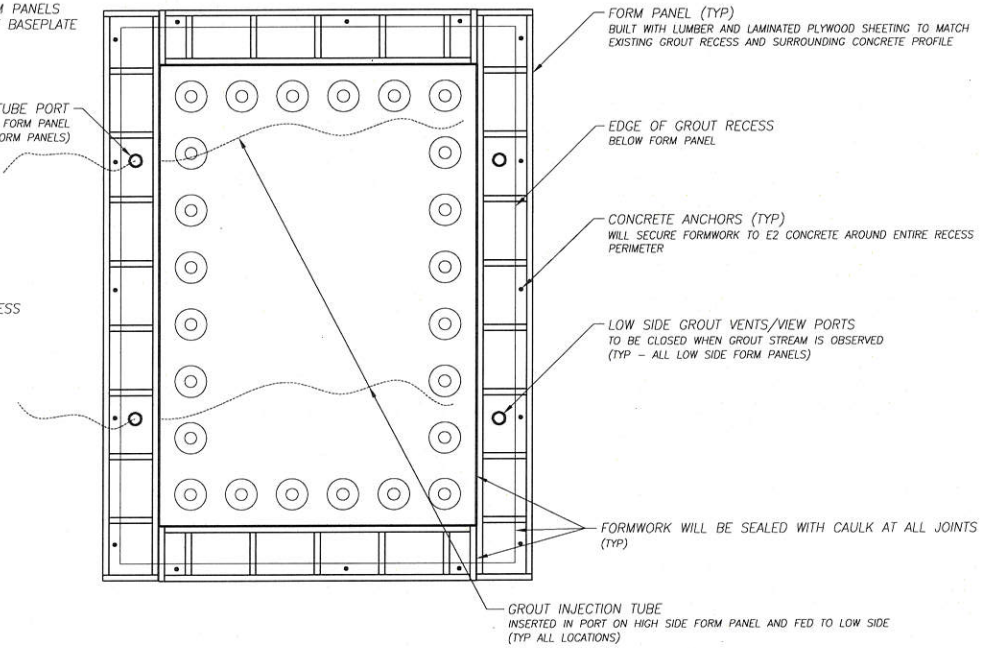

SECTION B – BEARING BASEPLATE GROUT FORM LAYOUT
PLAN VIEW AT TOP OF PIER E2 CONCRETE
(FROM SHEET DE352HJ)

FORMWORK HIGH SIDE — PIER E2 CROSS-SLOPE / DIRECTION OF GROUT FLOW → FORMWORK LOW SIDE

BASEPLATE GROUTING PROCEDURE:

1. COMPLETE ANCHOR ROD GROUTING.
   1.1. GROUT PLACED IN ANCHOR ROD DUCTS WILL BE CURED MINIMUM (3) DAYS BEFORE PLACING BASEPLATE GROUT.
2. CONSTRUCT FORMWORK AROUND BEARING AND SHEAR KEY BASEPLATES AND SEAL ALL JOINTS WITH CAULK.
3. FILL FORMWORK WITH WATER AND SOAK AREA TO RECEIVE GROUT FOR (24) HOURS.
4. DRAIN/VACUUM WATER FROM FORMWORK AND PLACE INJECTION HOSES THROUGH PORTS.
   4.1. INJECTION HOSES WILL BE INSERTED IN PORTS IN HIGH SIDE FORMWORK PANELS AND PUSHED TO LOW SIDE OF RECESS.
5. MIX GROUT AND BEGIN PUMPING THROUGH INJECTION LINES.
   5.1. INJECTION LINES WILL BEGIN FILLING LOW SIDE OF RECESS FIRST.
   5.2. HOSES WILL BE PULLED BACK THROUGH PORTS IN HIGH SIDE FORMWORK PANELS AS LOW SIDE BEGINS TO FILL.
6. CONTINUE FILLING FROM LOW SIDE OF RECESS TO HIGH SIDE UNTIL ENTIRE RECESS IS FILLED.
7. SEAL ALL VENT AND INJECTION PORTS AND LEAVE FORMWORK IN PLACE FOR A MINIMUM OF (24) HOURS BEFORE STRIPPING.

NOTES:

1. SEE GENERAL NOTES ON SHEET DE352AJ.
2. SEE SHEET DE352BJ FOR GROUT MATERIAL DETAILS.
3. SEE SHEETS DE352DJ – DE352GJ FOR INJECTION EQUIPMENT DETAILS.

REGISTERED PROFESSIONAL ENGINEER
KEVIN M. SMITH
No. C 62218
Exp. 7/30/13
CIVIL
STATE OF CALIFORNIA

REV	DATE	DWG BY	DWG CHK	DSGN BY	DSGN CHK	DESCRIPTION
6						
5						
4						
3						
2						
1						

FOR APPROVAL

STATE OF CALIFORNIA
DEPARTMENT OF TRANSPORTATION
CONTRACT NO. 04-0120F4
BRIDGE NO. 34-0006L/R

DISTRICT	COUNTY	ROUTE	KILOMETER POST
04	SF	80	13.2 / 13.9

SAN FRANCISCO OAKLAND BAY BRIDGE
EAST SPAN SEISMIC SAFETY PROJECT
SELF ANCHORED SUSPENSION BRIDGE
(SUPERSTRUCTURE AND TOWER)

E2 BEARING AND SHEAR KEY
ERECTION PLAN: GROUTING
BASEPLATE GROUTING FORMWORK DETAILS

American Bridge / FLUOR
A JOINT VENTURE

Design By:	Z. LAURIA	Date:	9/21/12
Design Chk:	K. SMITH	Date:	10/2/12
Drawn By:	Z. LAURIA	Date:	9/28/12
Drawing Chk:	K. SMITH	Date:	10/2/12
In Charge Of:	R. KICK		

Job No.	Sheet No.
660110	DE352J
Scale: NTS	Revision: 0

Oct 15, 2012 – 9:30am Y:\D300 E2 and W2\Submittals\Submittal 002756R00 – E2 Bearing and Shear Key Erection Plan – GROUT PLAN\Drawings\DWG\DE352A-R00.dwg

SP 750-15 / SP 750-18 / SP 1000

Trailer Mounted
Concrete Pumps

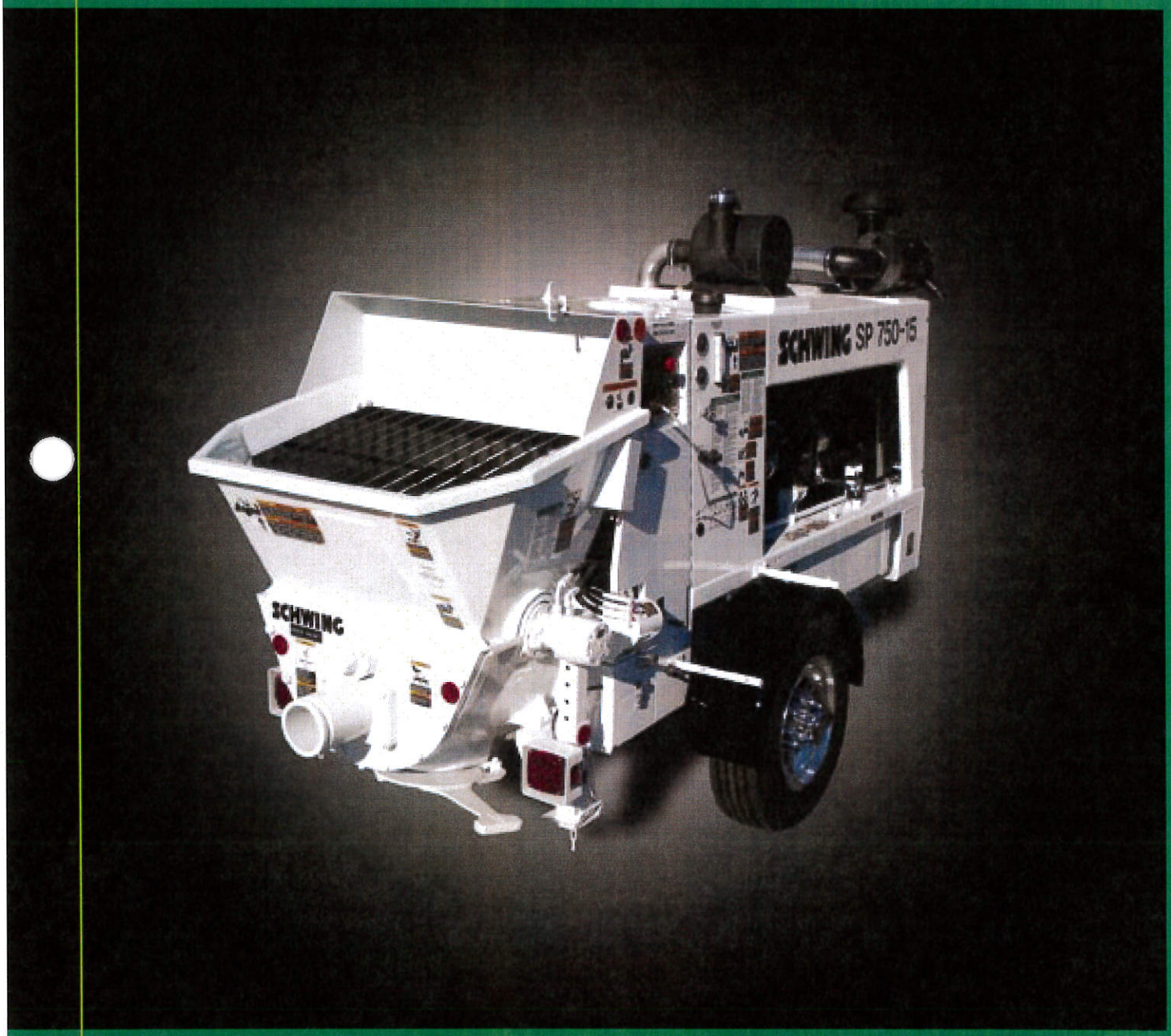

SCHWING

SPECIFICATIONS

PUMP SPECIFICATIONS	SP 750-15		SP 750-18		SP 1000	
	U.S.	Metric	U.S.	Metric	U.S.	Metric
Concrete Output Per Hour (cubic yards-cubic meters)	50	38	70	54	70	54
Maximum Pressure on Concrete (psi-bar)	1100	76	1100	76	1100	76
Maximum Aggregate Size (in.-mm)	1.5	38	1.5	38	1.5	38
Maximum Horizontal Pumping Distance* (feet-meters)	1160	354	1160	354	1160	354
Maximum Vertical Pumping Distance* (feet-meters)	330	100	330	100	330	100
Concrete Cylinder Diameter (in.-mm)	6	150	7	180	7	180
Differential Cylinder Diameter (in.-mm)	3.14/1.97	80/50	3.54/1.97	90/50	3.54/1.97	90/50
Concrete Cylinder Stroke Length (in.-mm)	39	1000	39	1000	39	1000
Maximum Pump Strokes Per Minute	35		35		35	
Main Hydraulic Pump	A11V095		A11V095		A11V095	
Volume Control	0 to Maximum		0 to Maximum		0 to Maximum	
Concrete Valve Type	Long Rock™		Long Rock™		Long Rock™	
Shifting Cylinders	2		2		2	
Hydraulic Tank Capacity (gallon-liters)	70	265	70	265	70	265
Hydraulic System	Open Loop		Open Loop		Open Loop	
Hopper-Height (in.-mm)	51	1300	51	1300	51	1300
Hopper Capacity (cubic feet-cubic meters)	11	.31	11	.31	11	.31
Outlet Diameter (in.-mm)	5	125	5	125	5	125
Engine Model - Tier II	Deutz BF4M2012		Deutz BF4M2012		Deutz BF4M2012C	
Engine Model - Tier III	Deutz TCD2012-100		Deutz TCD2012-100		Deutz TCD2012-133	
Engine Power (horsepower-kilowatt)	100	75	100	75	133	99
Fuel Tank Capacity (gallon-liter)	30	114	30	114	30	114
Axle	Single Standard		Single Standard		Single Standard	
Axle Capacity Rating (pounds-kilograms)	8000	3628	8000	3628	8000	3628
Tires	ST 215/75 R17.5		ST 215/75 R17.5		ST 215/75 R17.5	
Dual Axle Tires	LT 215/85 R16		LT 215/85 R16		LT 215/85 R16	
Brakes	Electric		Electric		Electric	
Outrigger Legs	Manual Standard		Manual Standard		Manual Standard	
Length (in.-cm)	184	468	184	468	184	468
Width (in.-cm)	66	168	66	168	66	168
Height (in.-cm)	83	211	83	211	83	211
Trailer Units Weight (pounds-kilograms)	7100	3220	7350	3334	7500	3402
Remote Control Cable (feet-meters)	100	30	100	30	100	30

*Pumping distances shown are to be used as a guide only since they have been considerably exceeded on specific projects. Maximum attainable distances depend upon concrete mix design and pipeline diameter. Maximum output and distance cannot be achieved simultaneously.

**Pump specifications are for standard units. Other units are available.

Specifications are subject to change without prior notice.

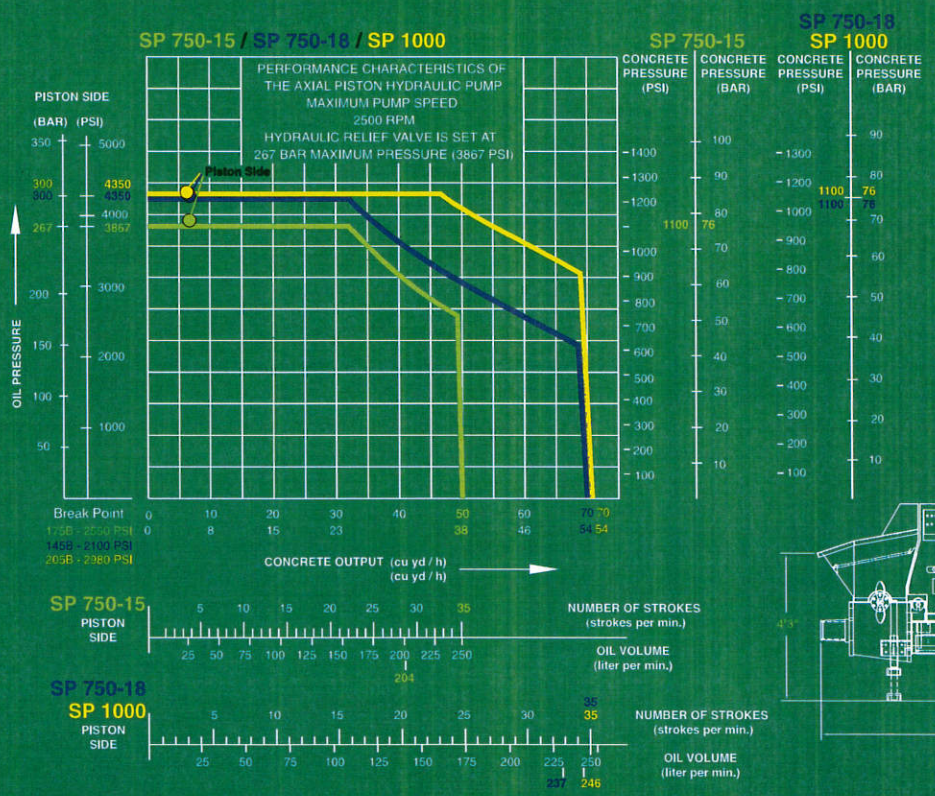

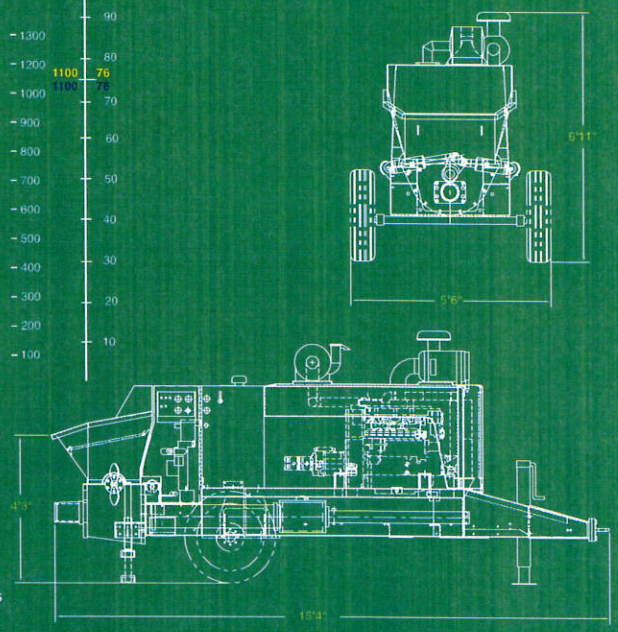

SCHWING-STETTER MOVES CONCRETE. WORLDWIDE.

Wherever concrete is produced and moved is where you will find Schwing-Stetter machinery.

With plants in Germany, Austria, USA, Brazil, Russia, China and India as well as with more than 100 sales and service facilities, the group of companies is always close to the customer.

Our wide range of products with something for every application is what makes Schwing-Stetter the No. 1 system supplier for concrete machinery worldwide.

CONCRETE BATCHING PLANTS | TRUCK MIXERS | TRUCK-MOUNTED CONCRETE PUMPS | STATIONARY CONCRETE PUMPS | SEPARATE PLACING BOOMS | CONCRETE RECYCLERS

1/08- 3M

SCHWING

1300 Gresham Road | Marietta, GA 30062 | TEL 800-237-8960
FAX 678-560-1269 | www.schwing.com

DIVERSIFIED STORAGE SYSTEMS
(888) SILO-SYS (888) 745-6797

PORTABLE LO-PROFILE BATCHING SILOS

Height 13'-10" Width 8'-6" Length 26'-0"

Portable Lo-Pro batching silo

- 800 CF. capacity (30 ton) **Cement
- Low-Pro design.
- 10 HP screw conveyor 12cu. ft. per minute discharge capacity.
- Loss weight batching computer.
- Cone fluidizer system with distribution tank.
- 4– speed jacks.
- Overload protection with high level alarm.

***Cement can weigh between 88-94 lbs. per cubic foot depending on how aerated it is.*

1135 E. Wooley Rd. Ph # 805-247-0418
Oxnard CA, 93030 Fax # 805-247-0246

www.CementSilos.com

PRODUCT DATA SHEET
January, 2007

4000 GALLON TRAILER POLY

GENERAL INFORMATION

These tanks feature a standard G.I. trailer hitch, and heavy-duty axles and tires designed to support the tank when it's fully loaded.

WEIGHTS AND MEASURES

» Capacity:	4000 gallons (nominal)
» Height:	10'-2" (grade to top of tank)
» Width :	8'-0" (wheel to wheel) 6'-4" (tank only)
» Length:	24'-3" (rear platform to tip of tongue) 18'-0" (tank only)
» Weight:	6,200 lbs.

STRUCTURAL DESIGN

» Tank Material:	High density cross-linked polyethylene
» Design Pressure:	0 psi – vented to atmosphere
» Design Vacuum:	0 psi – vented to atmosphere

RESTRICTIONS

» Sulfuric Acid Storage:	• 80% concentration maximum • Previously repaired tank cannot be used for H_2SO_4 – equipment number should have "W" at the end, meaning water service only. • 100°F maximum temperature • Top fill only • Top manway must be open during pneumatic filling of tank • Use flexible plumbing fixtures resistant to sulfuric acid

FEATURES

» Top Opening:	1 - 22" outside diameter covered manway
» Valves:	One rear 3" Asahi PVC butterfly valve
» Ladder:	One each at front and rear of tank
» Wheels:	40" outside diameter

MISCELLANEOUS

» Temperature Limit:	150°F

BAKERCORP™

To the best of our knowledge the technical data contained herein are true and accurate at the date of issuance and are subject to change without prior notice. No guarantee of accuracy is given or implied because variations can and do exist. NO WARRANTY OR GUARANTEE OF ANY KIND IS MADE BY BAKERCORP, EITHER EXPRESSED OR IMPLIED.

3020 OLD RANCH PARKWAY • SUITE 220 • SEAL BEACH, CA • 562-430-6262

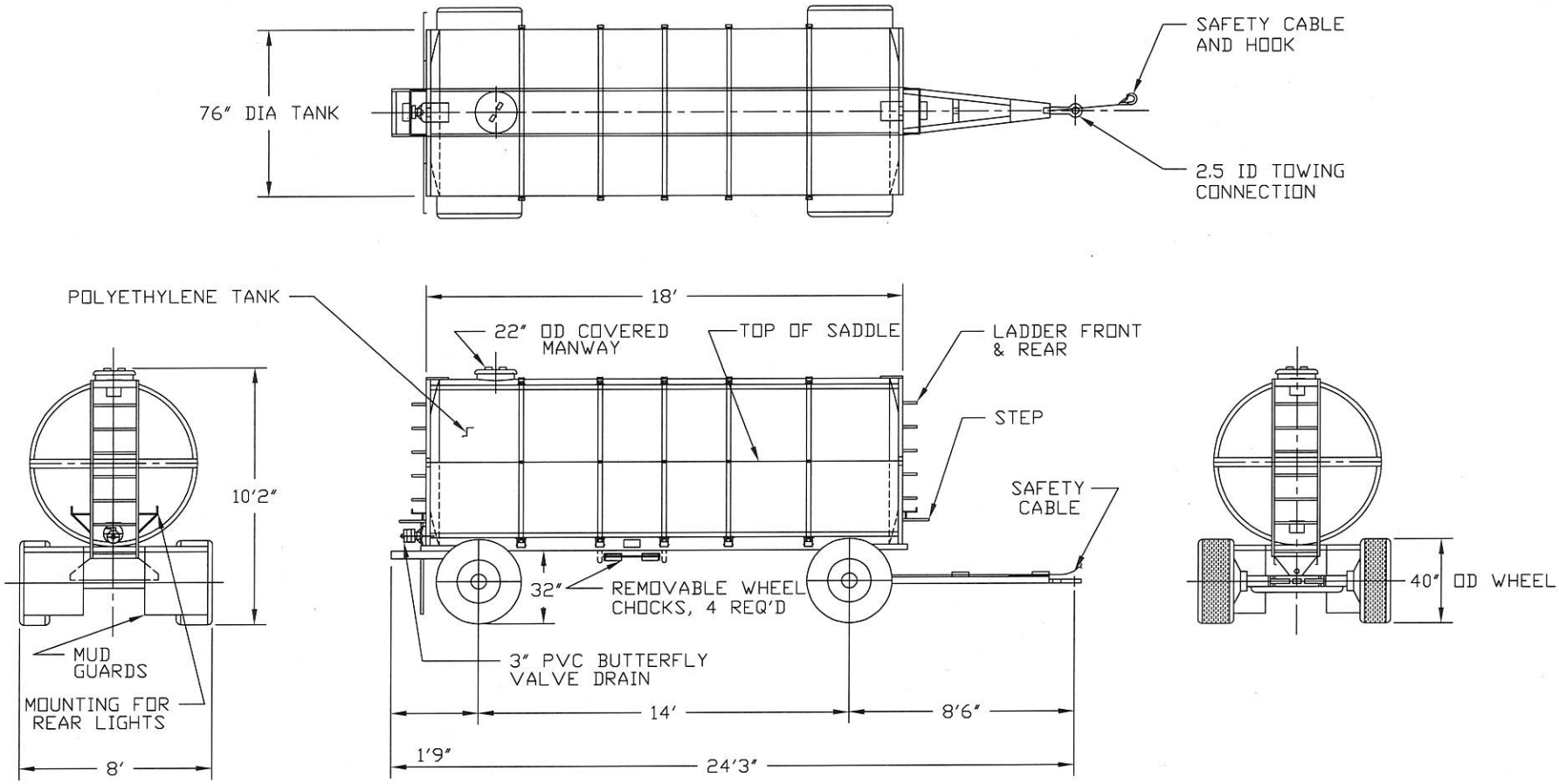

SPECIFICATIONS:

1) Tank Capacity: 4,000 gallons (95 BBL)
2) Tank Weight: 6,200 lbs. (empty)
3) Design pressure: 0 psig

NOTES:

1. This drawing is a baseline representation for this model of tank. Variations between this drawing and the actual equipment in the field can and do exist, primarily with appurtenance locations, sizes and quantities. Consult your local BakerCorp representative if specific needs exist.
2. THIS TANK MUST NOT BE TOWED BEHIND ANY VEHICLE OVER PUBLIC ROADS. This tank must be transported on a trailer over public roads.
3. Poly tank sulfuric acid restrictions apply to this tank.

The information contained herein is proprietary to Baker Tanks and shall not be reproduced or disclosed in whole or in part, or used for any design or manufacture except when user obtains direct written authorization from Baker Tanks.

REV.	DESCRIPTION	DATE	BY
G			
F			
E			
D			
C			
B			
A	Corrected rear valve size	12/18/06	PJB

BAKER CORP
3020 OLD RANCH PARKWAY
SEAL BEACH, CA 90740-2751

SCALE: To Scale	SIZE B	ORIGINAL DWG. DATE 31OCT03
DRAWN BY: A. R.	APPROVED BY: –	CAT/CLASS --
TITLE 4000 GALLON TRAILER POLY		SHEET 1 OF 1
DRAWING NO. S-3-M0003-1-		REV. A

BASF

The Chemical Company

PRODUCT DATA

3 03 62 13 **Non-Metallic Non-Shrink Grouting**

MASTERFLOW® 1205

High-performance duct grout for highly stressed steel

Description

Masterflow® 1205 is a cement-based pumpable grout with specially graded aggregate. It produces a pumpable, nonbleeding, high-strength fluid grout with an extended working time. The specially graded spherical aggregate mitigates chloride migration while still allowing the product to be easily pumped over long distances through small openings. Masterflow® 1205 meets all the compressive strength and "nonshrink" requirements ASTM C 1107 (CRD C621) at a fluid consistency.

Yield

One 55 lb (25 kg) bag yields approximately 0.55 ft^3 (0.016 m^3)

Packaging

55 lb (25 kg) multi-wall paper bags

2,500 lb (1,134 kg) bulk bags available by special order

Shelf Life

6 months in 55 lb (25 kg) bags when properly stored.

Storage

Store in unopened packaging in a clean, dry environment.

Features	Benefits
• High strength grout	Provides anchorage for subsequent tensioning
• Hardens without bleeding, settlement, segregation, shrinkage or formation of voids	Ensures optimal performance in hardened state, thus providing maximum bond and long-term protection against corrosion
• Prepackaged and pretested	Easy to mix. Assures uniform performance with consistent quality
• Compatible with high-strength steel	Protects stressed tendons, bolts, and bars from corrosion induced by chlorides and carbonation
• No added chlorides	Inhibits corrosion
• Easy to pump or pour	Ease of placement
• Can be pumped or re-circulated for relatively long periods of time	Adds flexibility to construction scheduling
• Can be used over a wide range of mixed grout temperatures from 45 to 90° F (7 to 32° C)	Lessens weather dependency
• Does not use aluminum powder as an expansion agent	Eliminates hydrogen embrittlement or bubble channel formation
• Complies with the PTI Specification for Grouting of Post-Tensioned Structures	High performance grout verified by both independent and lot performance testing

Where to Use

Application

- Pumping around post-tensioned tendons, cables, and high-strength rods to encapsulate and protect highly stressed steel from corrosion
- Placing around end sections of unanchored cables and rods for subsequent tensioning
- Filling voids in restricted spaces between wall panels, beams, and columns where grout will contact highly stressed steel
- Grouting cable anchor-plates or other plates where grout will contact highly stressed anchorages

How to Apply

Preparation

1. Clean strands and bars of all oxidation, dirt, oil, or any loose materials. Ducts should be clean and free of any defects.

2. Check proposed method of mixing and pumping to ensure continuous placement once pumping starts. Have a source of high-pressure water with connections for flushing grout hoses or partially grouted ducts in case the pumping is interrupted.

3. Test the pump and grout lines with water or pressurized oil-free air. Confirm that they are capable of withstanding the required pressure and that all connections are tight, without leaks. Loss of water from slow or nonmoving grout can result in a blocked line.

Protection and Repair

Technical Data

Composition

Masterflow® 1205 is a hydraulic, cement-based, pumpable grout with specially graded aggregate.

Compliances

- Meets all compressive strength and settlement shrinkage requirements at a fluid consistency per ASTM C 1107 (CRD C 621)
- Post Tensioning Institute (PTI) recommendations for a prepackaged post-tensioned steel-duct grout for horizontal and inclined tendons

Test Data based on 1.95 gal (7.4 L) of water per 55 lb (25 kg) bag

PROPERTY	RESULTS[1]	TEST METHODS
Wet Density lb/ft³ (g/cm³)	122 – 131 (1.95 – 2.1)	ASTM C 138 or per PTI spec Section 4.4.8
Flow, sec		
Immediately after Mixing	11 - 30	ASTM C 939
30 Minutes after Mixing with 30 sec Remix	11 - 30	
Modified Flow, sec		
Immediately after Mixing	7 - 20	Per PTI spec Section 4.4.5.2
30 Minutes after Mixing with 30 sec Remix	7 - 20	
Final Set, hrs	< 10	ASTM C 953
Volume Change, %		ASTM C 1090
1 day	> 0.0	
28 days	> 0.0 and < 0.2	
Prehardened Expansion height, % change, at 3 hours	< 0.2	ASTM C 940
Compressive Strength, psi (MPa)		ASTM C 942
1 day	> 2,000 (13.8)	
3 days	> 4,000 (27.6)	
7 days	> 5,500 (37.9)	
28 days	> 8,000 (55.2)	
Chloride Permeability, coulombs, at 28 days moist cure	< 2,500	ASTM C 1202 Modified PTI, 30 V
Acid Soluble Chloride Content, % by weight of cement	< 0.08	ASTM C 1152
Schupack-Gelman Pressure Bleed, % 10 min at 30 psi at vertical rise of 6 ft (1.6 m) maximum pressure	< 2	Per PTI spec Section 4.4.6.2 Table 4.1 type B
Wick Induced Bleeding, %, at 3 hrs	0	Per PTI spec Section 4.4.6.1 Wick induced bleed test
Electrical Resistivity, Ω-cm, at 28 days	> 9,000	ASTM C 1202
PTI Accelerated Corrosion Test, hrs	> 1,600 (greater than control)	Per PTI spec Section 4.4.7 corrosion test

[1]Results assume a temperature of 70° F (21° C)

Expect reasonable variations from the results shown above. Control field and laboratory tests on the basis of the desired placing consistency rather than strictly on water content.

4. Provide plug, ball, or gate valves at the pump outlet, the inlet ends of vertical ducts, and at both ends of the horizontal ducts. Also use a valved by-pass hose or pipe from the pump discharge line back to its hopper. This will ensure that the grout continues to recirculate from pump to hopper during connection changes and other pumping delays. Draped tendons typically also require venting at the crests and troughs as well as slightly uphill of crests. See the Post-Tensioning Institute Specification for Grouting of Post-Tensioned Structures for more complete information.

5. The inside diameter of the pipe, hose, and valves through which Masterflow® 1205 is pumped should be at least 1/2 – 2" (12.5 – 51 mm) and consistent throughout the system. Avoid connector elbows if possible.

6. The pump lines and grout line, if needed, may be flushed with high pH lime-saturated water to lubricate and cool the ducts. The oncoming grout will displace and discharge this water at the outlet end before accessing the air-free mixed grout. Collect the lime-saturated water and use as mix water if needed. Discard the transitional grout.

Temperature

1. The recommended temperature of the mixed grout should be 45 to 90° F (7 to 32° C). The duct temperatures should also be within the same temperature range. Follow special precautions for hot or cold weather. Higher temperatures increase the amount of mixing water needed for a given fluidity and limit working time. Lower temperatures induce bleeding, retard set, and impede early strength gain, but permit reducing the mixing-water content for a given fluidity and increase ultimate strength.

HOT-WEATHER GROUTING

When duct temperatures are above 90° F (32° C), use techniques to produce a lower mixed-grout temperature. Cool bags of Masterflow® 1205 by storing them in a shaded or cool area. Use cold potable water to obtain the proper temperature for the mixed grout. If ice chips are added to the mixing water, verify removal on the 1/8" screen over the pump hopper. Do not let the grout temperature drop below 50° F (4° C). Circulating cold water can also cool ducts. Lime [Ca $(OH)_2$] can be added to the circulating water to increase pH; this will help passivate the steel and reduce the potential for steel oxidation before grouting.

COLD-WEATHER GROUTING

When duct temperatures are 40° F (4° C), the temperature of the mixed grout should be increased by mixing in warm potable water. Ducts can be heated by circulating warm water throughout the ducts. Lime [Ca $(OH)_2$] may be added to the mixing water to increase pH and lubricate the duct. Do not exceed 90°F (32° C) temperatures when warming both the mixed grout and the duct.

Mixing

1. Masterflow® 1205 is a ready-to-use product requiring only the addition of potable water. Normal mixing water content should be from 1.8 to 2.1 gallon (6.8 - 7.9 Liters) of water per 55 lb (25 Kg) bag. Mix until wet density is equal or greater than 121.7 lb/ft^3 (1.95 g/cm^3) and produces "0" bleeding in the Post-Tensioning Institute ASTM C 940-based Wick Induced Bleeding Test, using the specified mixer for mixing the grout at the job. A flow between 15 and 25 seconds (ASTM C 939) should produce a pumpable consistency. Consult your BASF representative for special mixing instructions.

2. Do not use water in an amount or at a temperature that will produce a flow immediately after mixing of less than 15 seconds on the flow cone (ASTM C 939) or cause mixed grout to bleed or segregate. Jobsite conditions such as the size and complexity of the grouted space, pumping-line diameters, height, mixing and pumping methods, and temperatures are all factors that determine the actual amount of water needed.

3. Have one or more mixers available with the capacity to allow mixing and pumping to proceed simultaneously and continuously.

4. Place water in the mixer first, then steadily add the grout with mixer operating. Mix until the grout is homogeneous and free of lumps, approximately 1 – 2 minutes, scraping all of the dry material from the mixer sides. Convey the mixed grout into the pump surge hopper and pass through a screen with 0.125 – 0.188" (3 – 5 mm) openings to catch possible lumps; then start pumping grout, after verifying grout efflux, into the duct.

NOTE: Do not mix more grout than can be placed through a pump in 60 minutes, depending on temperature.

Application

Place Masterflow® 1205 in accordance with section C 5.6.3 Grouting Operations as stated in the PTI Specification for Grouting of Post-Tensioned Structures.

For Best Performance

- Do not add plasticizers, accelerators, retarders, or other additives unless advised in writing by BASF Technical Service.
- The water requirement may vary with mixing efficiency, temperature, and other variables.
- A colloidal mixer is preferred to optimize mixing and pumping efficiency.
- The walls of the space grouted should be between 45 and 90° F (7 and 32° C) and saturated with lime water for optimum results. For use at temperatures above the range, consult BASF Technical Service.
- If used in non-duct grout applications, cure all exposed grout areas by wet curing for 24 hours with clean, wet rags (do not use burlap), followed by the application of an ASTM C 309 or preferably ASTM C 1315 compliant curing compound.
- In cold weather, keep grout temperature above 45° F (7° C) until final set. Thereafter, keep temperature above freezing until grout attains a compressive strength of 1,500 psi (10.3 MPa).
- Hold a pre-job conference with your local representative to plan the installation. Hold conferences as early as possible. Conferences are important for applying the recommendations in this product bulletin to a given project and they help ensure a placement of highest quality and lowest cost.
- BASF is not responsible for corrosion caused by ingredients in the flushout, saturation, or mixing water or by contaminants in the space being grouted or in other materials used in the system.
- Make certain the most current versions of product data sheet and MSDS are being used; call Customer Service (1-800-433-9517) to verify the most current versions.
- Proper application is the responsibility of the user. Field visits by BASF personnel are for the purpose of making technical recommendations only and not for supervising or providing quality control on the jobsite.

Health and Safety

MASTERFLOW® 1205

WARNING!

Masterflow® 1205 contains silica, crystalline quartz; portland cement; calcium oxide; limestone; silica, amorphous; magnesium oxide.

Risks

Product is alkaline on contact with water and may cause injury to skin or eyes. Ingestion or inhalation of dust may cause irritation. Contains small amount of free respirable quartz which has been listed as a suspected human carcinogen by NTP and IARC. Repeated or prolonged overexposure to free respirable quartz may cause silicosis or other serious and delayed lung injury.

Precautions

Avoid contact with skin, eyes and clothing. Prevent inhalation of dust. Wash thoroughly after handling. Keep container closed when not in use. DO NOT take internally. Use only with adequate ventilation. Use impervious gloves, eye protection and if the TLV is exceeded or used in a poorly ventilated area, use NIOSH/MSHA approved respiratory protection in accordance with applicable Federal, state and local regulations.

First Aid

In case of eye contact, flush thoroughly with water for at least 15 minutes. In case of skin contact, wash affected areas with soap and water. If irritation persists, SEEK MEDICAL ATTENTION. Remove and wash contaminated clothing. If inhalation causes physical discomfort, remove to fresh air. If discomfort persists or any breathing difficulty occurs or if swallowed, SEEK IMMEDIATE MEDICAL ATTENTION.

Waste Disposal Method

This product when discarded or disposed of is not listed as a hazardous waste in federal regulations. Dispose of in a landfill in accordance with local regulations.

For additional information on personal protective equipment, first aid, and emergency procedures, refer to the product Material Safety Data Sheet (MSDS) on the job site or contact the company at the address or phone numbers given below.

Proposition 65

This product contains material listed by the State of California as known to cause cancer, birth defects or other reproductive harm.

VOC Content

0 g/L or 0 lbs/gal less water and exempt solvents.

For medical emergencies only, call ChemTrec (1-800-424-9300).

BASF Construction Chemicals, LLC – Building Systems

889 Valley Park Drive
Shakopee, MN, 55379

www.BuildingSystems.BASF.com

Customer Service 800-433-9517
Technical Service 800-243-6739

LIMITED WARRANTY NOTICE Every reasonable effort is made to apply BASF exacting standards both in the manufacture of our products and in the information which we issue concerning these products and their use. We warrant our products to be of good quality and will replace or, at our election, refund the purchase price of any products proved defective. Satisfactory results depend not only upon quality products, but also upon many factors beyond our control. Therefore, except for such replacement or refund, BASF MAKES NO WARRANTY OR GUARANTEE, EXPRESS OR IMPLIED, INCLUDING WARRANTIES OF FITNESS FOR A PARTICULAR PURPOSE OR MERCHANTABILITY, RESPECTING ITS PRODUCTS, and BASF shall have no other liability with respect thereto. Any claim regarding product defect must be received in writing within one (1) year from the date of shipment. No claim will be considered without such written notice or after the specified time interval. User shall determine the suitability of the products for the intended use and assume all risks and liability in connection therewith. Any authorized change in the printed recommendations concerning the use of our products must bear the signature of the BASF Technical Manager.

This information and all further technical advice are based on BASF's present knowledge and experience. However, BASF assumes no liability for providing such information and advice including the extent to which such information and advice may relate to existing third party intellectual property rights, especially patent rights. In particular, BASF disclaims all CONDITIONS AND WARRANTIES, WHETHER EXPRESS OR IMPLIED, INCLUDING THE IMPLIED WARRANTIES OF FITNESS FOR A PARTICULAR PURPOSE OR MERCHANTABILITY. BASF SHALL NOT BE RESPONSIBLE FOR CONSEQUENTIAL, INDIRECT OR INCIDENTAL DAMAGES (INCLUDING LOSS OF PROFITS) OF ANY KIND. BASF reserves the right to make any changes according to technological progress or further developments. It is the customer's responsibility and obligation to carefully inspect and test any incoming goods. Performance of the product(s) described herein should be verified by testing and carried out only by qualified experts. It is the sole responsibility of the customer to carry out and arrange for any such testing. Reference to trade names used by other companies is neither a recommendation, nor an endorsement of any product and does not imply that similar products could not be used.

For professional use only. Not for sale to or use by the general public.

Form No. 1019403 8/09
Printed on recycled paper including 10% post-consumer fiber.

© 2009 BASF
Printed in U.S.A.

BASF

The Chemical Company

PRODUCT DATA

3 03 62 13 **Non-Metallic Non-Shink Grouting**

MASTERFLOW® 928

High-precision mineral-aggregate grout with extended working time

Description

Masterflow® 928 grout is a hydraulic cement-based mineral-aggregate grout with an extended working time. It is ideally suited for grouting machines or plates requiring precision load-bearing support. It can be placed from fluid to damp pack over a temperature range of 45 to 90° F (7 to 32° C). Masterflow® 928 grout meets the requirements of ASTM C1107 and US Army Corps of Engineers CRD C621 (ASTM C1107-93a, Grades B and C), at a fluid consistency over a 30-minute working time and is ANSI/NSF 61 approved Suitable for use with potable water.

Yield

One 55 lb (25 kg) bag of Masterflow® 928 grout mixed with approximately 10.5 lbs (4.8 kg) or 1.26 gallons (4.8 L) of water, yields approximately 0.50 ft^3 (0.014 m^3) of grout.

The water requirement may vary due to mixing efficiency, temperature, and other variables.

Packaging

55 lb (25 kg) multi-wall paper bags

3,300 lb (1,500 kg) bulk bags

Shelf Life

55 lb bags: 1 year when properly stored

3,300 lb bulk bags: 6 months when properly stored

Storage

Store in unopened bags in clean, dry conditions.

Features / Benefits

Features	Benefits
• Extended working time	Ensures sufficient time for placement
• Can be mixed at a wide range of consistencies	Ensures proper placement under a variety of conditions
• Freeze/thaw resistant	Suitable for exterior applications
• Hardens free of bleeding, segregation, or settlement shrinkage	Provides a maximum effective bearing area for optimum load transfer
• Contains high-quality, well-graded quartz aggregate	Provides optimum strength and workability
• Sulfate resistant	For marine, wastewater, and other sulfate-containing environments
• ANSI / NSF 61 approved	Suitable for use with potable water

Where to Use

INDUSTRIES

- Power generation
- Pulp and paper mills
- Steel and cement mills
- Stamping and machining
- Water and waste treatment
- General construction

APPLICATIONS

- Where a nonshrink grout is required for maximum effective bearing area for optimum load transfer
- Where high one-day and later-age compressive strengths are required
- Applications requiring a pumpable grout
- Compressors and generators
- Pump bases and drive motors
- Tank bases
- Conveyors
- Grouting anchor bolts, rebar and dowel rods
- Nonshrink grouting of precast well panels, beams, columns, curtain walls, concrete systems and other structural and non-structural building components
- Repairing concrete, including grouting voids and rock pockets

LOCATIONS

- Interior or exterior
- Marine applications
- Freeze/thaw environments

How to Apply

Surface Preparation

1. Steel surfaces must be free of dirt, oil, grease, or other contaminants.

2. The surface to be grouted must be clean, SSD, strong, and roughened to a CSP of 5 – 9 following ICRI Guideline 03732 to permit proper bond. For freshly placed concrete, consider using Liquid Surface Etchant (see Form No. 1020198) to achieve the required surface profile.

3. When dynamic, shear or tensile forces are anticipated, concrete surfaces should be chipped with a "chisel-point" hammer, to a roughness of (plus or minus) 3/8" (10 mm). Verify the absence of bruising following ICRI Guideline 03732.

4. Concrete surfaces should be saturated (ponded) with clean water for 24 hours just before grouting.

5. All freestanding water must be removed from the foundation and bolt holes immediately before grouting.

Protection and Repair

Technical Data

Composition

Masterflow® 928 is a hydraulic cement-based mineral-aggregate grout.

Compliances

- ASTM C 1107, Grades B and C, and CRD 621, Grades B and C, requirements at a fluid consistency over a temperature range of
- ANSI / NSF 61 for use with potable water

Test Data

PROPERTY	RESULTS			TEST METHODS
Compressive strengths, psi (MPa)				ASTM C 942, according to ASTM C 1107
		Consistency		
	Plastic[1]	**Flowable**[2]	**Fluid**[3]	
1 day	4,500 (31)	4,000 (28)	3,500 (24)	
3 days	6,000 (41)	5,000 (34)	4,500 (31)	
7 days	7,500 (52)	6,700 (46)	6,500 (45)	
28 days	9,000 (62)	8,000 (55)	7,500 (52)	
Volume change*				ASTM C 1090
		% Requirement		
	% Change	**of ASTM C 1107**		
1 day	> 0	0.0 – 0.30		
3 days	0.04	0.0 – 0.30		
14 days	0.05	0.0 – 0.30		
28 days	0.06	0.0 – 0.30		
Setting time, hr:min				ASTM C 191
		Consistency		
	Plastic[1]	**Flowable**[2]	**Fluid**[3]	
Initial set	2:30	3:00	4:30	
Final set	4:00	5:00	6:00	
Flexural strength,* psi (MPa)				ASTM C 78
3 days	1,000 (6.9)			
7 days	1,050 (7.2)			
28 days	1,150 (7.9)			
Modulus of elasticity,* psi (MPa)				ASTM C 469, modified
3 days	2.82×10^6 (1.94×10^4)			
7 days	3.02×10^6 (2.08×10^4)			
28 days	3.24×10^6 (2.23×10^4)			
Coefficient of thermal expansion,* in/in/° F (mm/mm/° C)	6.5×10^{-6} (11.7×10^{-6})			ASTM C 531
Split tensile and tensile strength,* psi (MPa)				ASTM C 496 (splitting tensile) ASTM C 190 (tensile)
	Splitting Tensile	**Tensile**		
3 days	575 (4.0)	490 (3.4)		
7 days	630 (4.3)	500 (3.4)		
28 days	675 (4.7)	500 (3.4)		
Punching shear strength,* psi (MPa), 3 by 3 by 11" (76 by 76 by 279 mm) beam				BASF Method
3 days	2,200 (15.2)			
7 days	2,260 (15.6)			
28 days	2,650 (18.3)			
Resistance to rapid freezing and thawing	300 Cycles RDF 99%			ASTM C 666, Procedure A

[1]100 – 125% flow on flow table per ASTM C 230

[2]125 – 145% flow on flow table per ASTM C 230

[3]25 to 30 seconds through flow cone per ASTM C 939

*Test conducted at a fluid consistency

Test results are averages obtained under laboratory conditions. Expect reasonable variations.

Test Data, continued

PROPERTY	RESULTS		TEST METHODS
Ultimate tensile strength and bond stress			ASTM E 488, tests*
Diameter in (mm)	**Depth in (mm)**	**Tensile strength lbs (kg)**	**Bond stress psi (MPa)**
5/8 (15.9)	4 (101.6)	23,500 (10,575)	2,991 (20.3)
3/4 (19.1)	5 (127.0)	30,900 (13,905)	2,623 (18.1)
1 (25.4)	6.75 (171.5)	65,500 (29,475)	3,090 (21.3)

*Average of 5 tests in ≥ 4,000 psi (27.6 MPa) concrete using 125 ksi threaded rod in 2" (51mm) diameter, damp, core-drilled holes.

Notes:

1. Grout was mixed to a fluid consistency.
2. Recommended design stress: 2,275 psi (15.7 MPa).
3. Refer to the "Adhesive and Grouted Fastener Capacity Design Guidelines" for more detailed information.
4. Tensile tests with headed fasteners were governed by concrete failure.

Jobsite Testing

If strength tests must be made at the jobsite, use 2" (51 mm) metal cube molds as specified by ASTM C 942 and ASTM C 1107. DO NOT use cylinder molds. Control field and laboratory tests on the basis of desired placement consistency rather than strictly on water content.

6. Anchor bolt holes must be grouted and sufficiently set before the major portion of the grout is placed.

7. Shade the foundation from sunlight 24 hours before and 24 hours after grouting.

Forming

1. Forms should be liquid tight and nonabsorbent. Seal forms with putty, sealant, caulk, polyurethane foam.

2. Moderately sized equipment should utilize a head form sloped at 45 degrees to enhance the grout placement. A moveable head box may provide additional head at minimum cost.

3. Side and end forms should be a minimum 1" (25 mm) distant horizontally from the object grouted to permit expulsion of air and any remaining saturation water as the grout is placed.

4. Leave a minimum of 2" between the bearing plate and the form to allow for ease of placement.

5. Use sufficient bracing to prevent the grout from leaking or moving.

6. Eliminate large, nonsupported grout areas wherever possible.

7. Extend forms a minimum of 1" (25 mm) higher than the bottom of the equipment being grouted.

8. Expansion joints may be necessary for both indoor and outdoor installation. Consult your local BASF field representative for suggestions and recommendations.

Temperature

1. For precision grouting, store and mix grout to produce the desired mixed-grout temperature. If bagged material is hot, use cold water, and if bagged material is cold, use warm water to achieve a mixed-product temperature as close to 70° F (21°C) as possible.

Recommended Temperature Guidelines for Precision Grouting

	MINIMUM °F (°C)	PREFERRED °F (°C)	MAXIMUM °F (°C)
Foundation and plates	45 (7)	50 – 80 (10 – 27)	90 (32)
Mixing water	45 (7)	50 – 80 (10 – 27)	90 (32)
Grout at mixed and placed temp	45 (7)	50 – 80 (10 – 27)	90 (32)

2. If temperature extremes are anticipated or special placement procedures are planned, contact your local BASF representative for assistance.

3. When grouting at minimum temperatures, see that the foundation, plate, and grout temperatures do not fall below 40° F (7° C) until after final set. Protect the grout from freezing (32° F or 0° C) until it has attained a compressive strength of 3,000 psi (21 MPa).

Mixing

1. Place estimated water (use potable water only) into the mixer, then slowly add the grout. For a fluid consistency, start with 9 lbs (4 kg) (1.1 gallon [4.2L]) per 55 lb bag.

2. The water demand will depend on mixing efficiency, material, and ambient-temperature conditions. Adjust the water to achieve the desired flow. Recommended flow is 25 – 30 seconds using the ASTM C 939 Flow-Cone Method. Use the minimum amount of water required to achieve the necessary placement consistency.

3. Moderately sized batches of grout are best mixed in one or more clean mortar mixers. For large batches, use ready-mix trucks and 3,300 lb (1,500 kg) bags for maximum efficiency and economy.

4. Mix grout a minimum of 5 minutes after all material and water is in the mixer. Use mechanical mixer only.

5. Do not mix more grout than can be placed in approximately 30 minutes.

6. Transport by wheelbarrow or buckets or pump to the equipment being grouted. Minimize the transporting distance.

7. Do not retemper grout by adding water and remixing after it stiffens.

8. DO NOT VIBRATE GROUT TO FACILITATE PLACEMENT.

9. For aggregate extension guidelines, refer to Appendix MB-10: Guide to Cementitious Grouting.

Application

1. Always place grout from only one side of the equipment to prevent air or water entrapment beneath the equipment. Place Masterflow® 928 in a continuous pour. Discard grout that becomes unworkable. Make sure that the material fills the entire space being grouted and that it remains in contact with plate throughout the grouting process.

2. Immediately after placement, trim the surfaces with a trowel and cover the exposed grout with clean wet rags (not burlap). Keep rags moist until grout surface is ready for finishing or until final set.

3. The grout should offer stiff resistance to penetration with a pointed mason's trowel before the grout forms are removed or excessive grout is cut back. After removing the damp rags, immediately coat with a recommended curing compound com-pliant with ASTM C 309 or preferably ASTM C 1315.

4. Do not vibrate grout. Use steel straps inserted under the plate to help move the grout.

5. Consult your BASF representative before placing lifts more than 6" (152 mm) in depth.

Curing

Cure all exposed grout with an approved membrane curing compound compliant with ASTM C 309 or preferably ASTM C 1315. Apply curing compound immediately after the wet rags are removed to minimize potential moisture loss.

For Best Performance

- For guidelines on specific anchor-bolt applications, contact BASF Technical Service.
- Do not add plasticizers, accelerators, retarders, or other additives unless advised in writing by BASF Technical Service.
- The water requirement may vary with mixing efficiency, temperature, and other variables.
- Hold a pre-job conference with your local representative to plan the installation. Hold conferences as early as possible before the installation of equipment, sole plates, or rail mounts. Conferences are important for applying the recommendations in this product data sheet to a given project, and they help ensure a placement of highest quality and lowest cost.
- The ambient and initial temperature of the grout should be in the range of 45 to 90° F (7 to 32° C) for both mixing and placing. Ideally the amount of mixing water used should be that which is necessary to achieve a 25 – 30 second flow according to ASTM C 939 (CRD C 611). For placement outside of the 45 to 90° F (7 to 32° C) range, contact your local BASF representative.
- For pours greater than 6" (152 mm) deep, consult your local BASF representative for special precautions and installation procedures.
- Use Embeco® 885 grout for dynamic load-bearing support and similar application conditions as Masterflow® 928.
- Use Masterflow® 816, Masterflow® 1205, or Masterflow® 1341 post-tensioning cable grouts when the grout will be in contact with steel stressed over 80,000 psi (552 MPa).
- Masterflow® 928 is not intended for use as a floor topping or in large areas with exposed shoulders around baseplates. Where grout has exposed shoulders, occasional hairline cracks may occur. Cracks may also occur near sharp corners of the baseplate and at anchor bolts. These superficial cracks are usually caused by temperature and moisture changes that affect the grout at exposed shoulders at a faster rate than the grout beneath the baseplate. They do not affect the structural, nonshrink, or vertical support provided by the grout if the foundation-preparation, placing, and curing procedures are properly carried out.
- The minimum placement depth is 1" (25 mm).
- Make certain the most current versions of product data sheet and MSDS are being used; call Customer Service (1-800-433-9517) to verify the most current version.
- Proper application is the responsibility of the user. Field visits by BASF personnel are for the purpose of making technical recommendations only and not for supervising or providing quality control on the jobsite.

Health and Safety

MASTERFLOW® 928

WARNING!

Masterflow® 928 contains silica, crystalline quartz; portland cement; limestone; calcium oxide; gypsum; silica, amorphous; magnesium oxide.

Risks

Product is alkaline on contact with water and may cause injury to skin or eyes. Ingestion or inhalation of dust may cause irritation. Contains small amount of free respirable quartz which has been listed as a suspected human carcinogen by NTP and IARC. Repeated or prolonged overexposure to free respirable quartz may cause silicosis or other serious and delayed lung injury.

Precautions

Avoid contact with skin, eyes and clothing. Prevent inhalation of dust. Wash thoroughly after handling. Keep container closed when not in use. DO NOT take internally. Use only with adequate ventilation. Use impervious gloves, eye protection and if the TLV is exceeded or used in a poorly ventilated area, use NIOSH/MSHA approved respiratory protection in accordance with applicable Federal, state and local regulations.

First Aid

In case of eye contact, flush thoroughly with water for at least 15 minutes. In case of skin contact, wash affected areas with soap and water. If irritation persists, SEEK MEDICAL ATTENTION. Remove and wash contaminated clothing. If inhalation causes physical discomfort, remove to fresh air. If discomfort persists or any breathing difficulty occurs or if swallowed, SEEK IMMEDIATE MEDICAL ATTENTION.

Waste Disposal Method

This product when discarded or disposed of, is not listed as a hazardous waste in federal regulations. Dispose of in a landfill in accordance with local regulations.

For additional information on personal protective equipment, first aid, and emergency procedures, refer to the product Material Safety Data Sheet (MSDS) on the job site or contact the company at the address or phone numbers given below.

Proposition 65

This product contains material listed by the State of California as known to cause cancer, birth defects or other reproductive harm.

VOC Content

0 g/L or 0 lbs/gal less water and exempt solvents.

For medical emergencies only, call ChemTrec (1-800-424-9300).

BASF Corporation
Building Systems

889 Valley Park Drive
akopee, MN, 55379

www.BuildingSystems.BASF.com

Customer Service 800-433-9517
Technical Service 800-243-6739

LIMITED WARRANTY NOTICE Every reasonable effort is made to apply BASF exacting standards both in the manufacture of our products and in the information which we issue concerning these products and their use. We warrant our products to be of good quality and will replace or, at our election, refund the purchase price of any products proved defective. Satisfactory results depend not only upon quality products, but also upon many factors beyond our control. Therefore, except for such replacement or refund, BASF MAKES NO WARRANTY OR GUARANTEE, EXPRESS OR IMPLIED, INCLUDING WARRANTIES OF FITNESS FOR A PARTICULAR PURPOSE OR MERCHANTABILITY, RESPECTING ITS PRODUCTS, and BASF shall have no other liability with respect thereto. Any claim regarding product defect must be received in writing within one (1) year from the date of shipment. No claim will be considered without such written notice or after the specified time interval. User shall determine the suitability of the products for the intended use and assume all risks and liability in connection therewith. Any authorized change in the printed recommendations concerning the use of our products must bear the signature of the BASF Technical Manager.

This information and all further technical advice are based on BASF's present knowledge and experience. However, BASF assumes no liability for providing such information and advice including the extent to which such information and advice may relate to existing third party intellectual property rights, especially patent rights. In particular, BASF disclaims all CONDITIONS AND WARRANTIES, WHETHER EXPRESS OR IMPLIED, INCLUDING THE IMPLIED WARRANTIES OF FITNESS FOR A PARTICULAR PURPOSE OR MERCHANTABILITY. BASF SHALL NOT BE RESPONSIBLE FOR CONSEQUENTIAL, INDIRECT OR INCIDENTAL DAMAGES (INCLUDING LOSS OF PROFITS) OF ANY KIND. BASF reserves the right to make any changes according to technological progress or further developments. It is the customer's responsibility and obligation to carefully inspect and test any incoming goods. Performance of the product(s) described herein should be verified by testing and carried out only by qualified experts. It is the sole responsibility of the customer to carry out and arrange for any such testing. Reference to trade names used by other companies is neither a recommendation, nor an endorsement of any product and does not imply that similar products could not be used.

For professional use only. Not for sale to or use by the general public.

Form No. 1019303 03/12
Printed on recycled paper including 10% post-consumer fiber.

© 2012 BASF
Printed in U.S.A.

American Bridge / FLUOR
A JOINT VENTURE

CONCRETE TRUCK AND WASH WATER LOADING ON BOX GIRDER DECK (SAS) AFTER LOAD TRANSFER

U-RIB CONTINUOUS BEAM ANALYSIS

U-RIB ROLLING LOADS (AFTER LOAD TRANSFER)

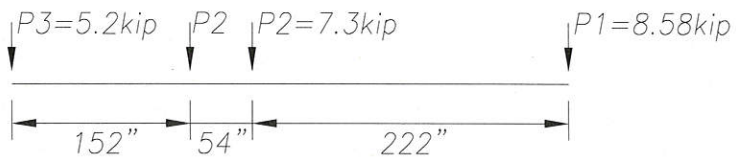

CASE 1 - CONCRETE TRUCK UNLOADED

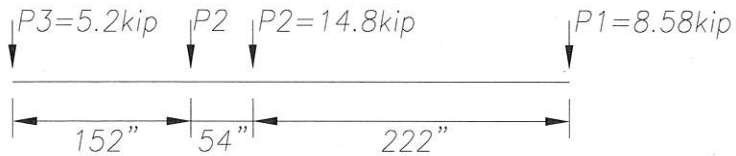

CASE 2 - CONCRETE TRUCK LOADED

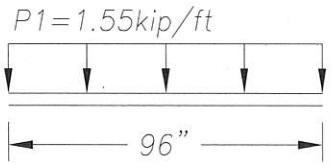

CASE 3 - 4000 GAL. WATER TANK LOADING

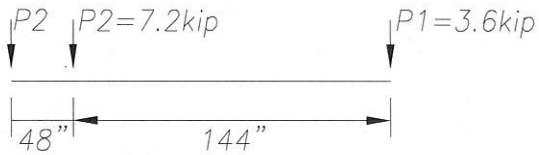

CASE 4 - WATER TRUCK LOADED (HS20-44)

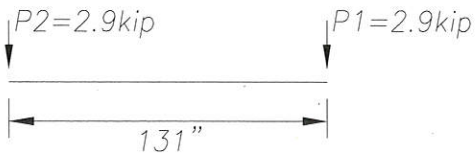

CASE 5 - CONCRETE PUMP LOADED

P =WL*(1+IM)*DF
WL=WHEEL LOAD
IM=IMPACT FACTOR
(10% CASES 1-4)
(100% CASE 5)
DF=DISTRIBUTION FACTOR
(78% TRUCK LOAD ON TIRES)
(100% WATER TANK ON PAD OR MATS)

FOR APPROVAL

SAN FRANCISCO OAKLAND BAY BRIDGE
EAST SPAN SEISMIC SAFETY PROJECT
SELF ANCHORED SUSPENSION BRIDGE
(SUPERSTRUCTURE AND TOWER)

STATE OF CALIFORNIA
DEPARTMENT OF TRANSPORTATION
CONTRACT NO. 04-0120F4
BRIDGE NO. 34-0006L/R

DISTRICT	COUNTY	ROUTE	KILOMETER POST
04	SF	80	13.2 / 13.9

American Bridge FLUOR A JOINT VENTURE

gn By:	K. SMITH	Date:	10/2/12
Design Chk:	Z. LAURIA	Date:	10/4/12
Drawn By:	K. SMITH	Date:	10/2/12
Drawing Chk:	Z. LAURIA	Date:	10/4/12
In Charge Of:	R. KICK		
AB Job No.	660110		

U-RIB LOADING FROM PIER E2 GROUTING OPERATIONS
AFTER PHASE 1 OF LOAD TRANSFER

Scale: NONE

Sheet No. 1 OF 1

Oct 04, 2012 – 3:41pm C: Documents and Settings ksmith Desktop E2 Bearing and Shear Key Grouting Plan Calculations Drawings DWG Concrete Truck OBG Deck Loading.dwg

Section Properties

Prop	Section	Area (in^2)	I_{yy} (in^4)	I_{zz} (in^4)	J (in^4)	Material
1	Prismatic General	33.108	1.09E+3	1.09E+3	727.270	STEEL

Materials

Mat	Name	E (kip/in^2)	ν	Density (kip/in^3)	α (1/°F)
1	STEEL	29E+3	0.300	0.000	6.5E -6
2	STAINLESSSTEEL	28E+3	0.300	0.000	9.9E -6
3	ALUMINUM	10E+3	0.330	0.000	12.8E -6
4	CONCRETE	3.15E+3	0.170	0.000	5.5E -6

Moving Load Definition : Type 1

Width (in)
-

Force (kip)	Distance (in)
5.200	-
7.300	152.000
7.300	54.000
8.580	222.000

Moving Load Definition : Type 2

Width (in)
-

Force (kip)	Distance (in)
5.200	-
14.800	152.000
14.800	54.000
8.580	222.000

Moving Load Definition : Type 3

Width (in)
-

Force (kip)	Distance (in)
1.550	-
1.550	12.000
1.550	12.000
1.550	12.000
1.550	12.000
1.550	12.000
1.550	12.000
1.550	12.000

Moving Load Definition : Type 4

Width (in)
-

Force (kip)	Distance (in)
7.200	-
7.200	48.000
3.600	144.000

Moving Load Definition : Type 5

Width (in)
-

Force (kip)	Distance (in)
2.900	-
2.900	131.000

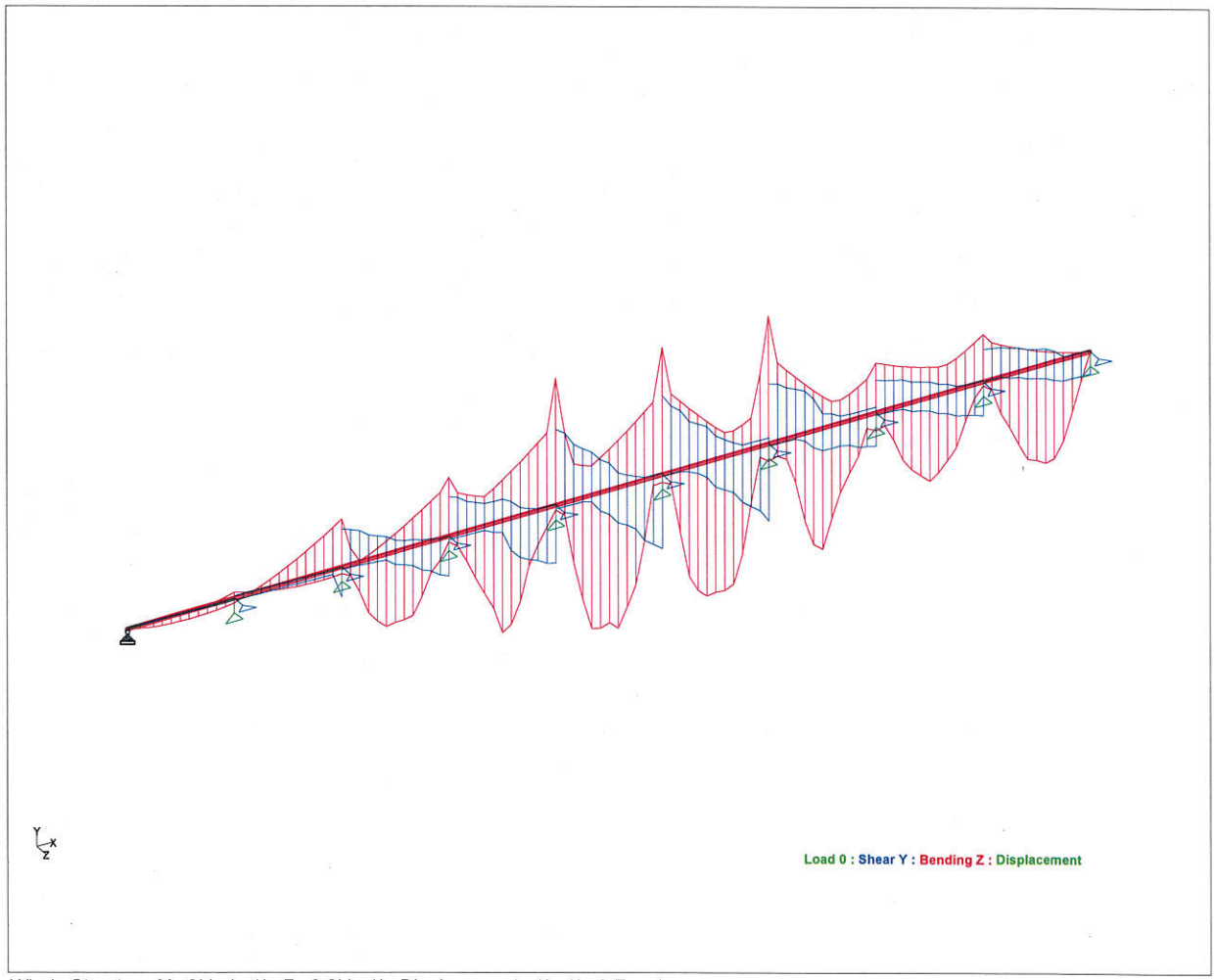

Whole Structure Mz 2kip-in:1in Fy 0.3kip:1in Displacements 1in:1in 0 Envelope

Beam Force Detail Summary

Sign convention as diagrams:- positive above line, negative below line except Fx where positive is compression. Distance d is given from beam end A.

				Axial	Shear		Torsion	Bending	
	Beam	L/C	d (in)	Fx (kip)	Fy (kip)	Fz (kip)	Mx (kip-in)	My (kip-in)	Mz (kip-in)
Max Fx	1	1:SELF WEIGH	0.000	**0.000**	0.307	0.000	0.000	0.000	0.000
Min Fx	1	1:SELF WEIGH	0.000	**0.000**	0.307	0.000	0.000	0.000	0.000
Max Fy	6	66:LOAD GENI	0.000	0.000	**21.563**	0.000	0.000	0.000	104.192
Min Fy	6	73:LOAD GENI	98.500	0.000	**-21.274**	0.000	0.000	0.000	121.951
Max Fz	1	1:SELF WEIGH	0.000	0.000	0.307	**0.000**	0.000	0.000	0.000
Min Fz	1	1:SELF WEIGH	0.000	0.000	0.307	**0.000**	0.000	0.000	0.000
Max Mx	1	1:SELF WEIGH	0.000	0.000	0.307	0.000	**0.000**	0.000	0.000
Min Mx	1	1:SELF WEIGH	0.000	0.000	0.307	0.000	**0.000**	0.000	0.000
Max My	1	1:SELF WEIGH	0.000	0.000	0.307	0.000	0.000	**0.000**	0.000
Min My	1	1:SELF WEIGH	0.000	0.000	0.307	0.000	0.000	**0.000**	0.000
Max Mz	6	78:LOAD GENI	98.500	0.000	-13.082	0.000	0.000	0.000	**232.912**
Min Mz	5	50:LOAD GENI	57.130	0.000	-9.186	0.000	0.000	0.000	**-256.945**

American Bridge / FLUOR
A JOINT VENTURE

CONCRETE TRUCK AND WASH WATER LOADING ON BOX GIRDER DECK (SAS) AFTER LOAD TRANSFER

BOX GIRDER DECK CAPACITY

Pier E2 Grouting Equipment Loading on OBG Deck - URib Check After Load Transfer

PURPOSE:

To check the stresses on the OBG Deck Plate and U-Ribs due to use of the Pier E2 Bearing and Shear Key grouting equipment on the OBG deck after load transfer in the configurations shown on drawing DE352AJ.

DESIGN APPROACH:

The applied demands to the bridge deck from the grouting equipment will be compared against the capacity of the deck using AASHTO LRFD Edition, 2005.

These calcs look at the load onto the OBG deck from a concrete truck loaded with 10 cubic yards of grout, a grout pump, a water truck and a water tank.

DESIGN STANDARD:

AASHTO LRFD Edition, 2005

REFERENCES:

STAAD model "URib Continuous Beam Analysis After Load Transfer" and attached report.
ABF-SUB-000457R02 - "Box Girder Section Properties"
ABF-SUB-001376R00 - "Final Bridge Geometry and Forces Calculations"
Drawing DE352AJ

CONTENTS LISTED BY SECTION:

1. Material Properties and Basic Member Dimensions
2. Loads
3. Design Checks

1. Material Properties and Basic Member Dimensions:

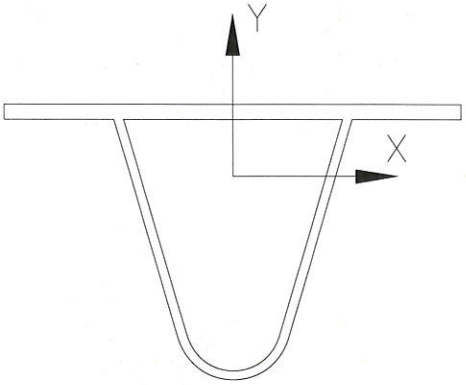

Area:	21360.0900
Perimeter:	2775.0295
Bounding box:	X: -300.0000 -- 300.0000
	Y: -269.5721 -- 95.4279
Centroid:	X: 0.0000
	Y: 0.0000
Moments of inertia:	X: 302713267.9920
	Y: 452880101.4938
Product of inertia:	XY: 0.0000
Radii of gyration:	X: 119.0458
	Y: 145.6096

Yield Strength of OBG steel: $F_y := 345 \cdot MPa$

Modulus of Elasticity: $E := 29000 \cdot ksi$

Area of Urib: $A_{Urib} := 21360 \cdot mm^2$

Shear Area of Urib: $A_{Urib_shear} := 6968 \cdot mm^2$

Strong Axis Moment of Inertia: $I_{xxUrib} := 302713268 mm^4 = 727.27 \cdot in^4$

Weak Axis Moment of Inertia: $I_{yyUrib} := 452880101 mm^4 = 1088.05 \cdot in^4$

Minimum Radius of Gyration: $r_x := 119 \cdot mm = 4.69 \cdot in$

Distance from Neutral Axis to Top Fiber: $y_{top} := 95.4 \cdot mm = 3.76 \cdot in$

Distance from Neutral Axis to Bottom Fiber: $y_{bot} := 270 \cdot mm = 10.63 \cdot in$

Box Girder Moment of Inertia: $I_{xx} := 14.455 \cdot m^4$

Box Girder Cross-Sectional Area: $A := 2.53189 m^2$

Box Girder Neutral Axis: $c_y := 2.606 \cdot m$

Box Girder section chosen (PP124W) has section properties Ixx, A, and cy that produce the greatest Axial load (P.h1, P.h2) in one U-rib due to the global dead loads (see sections 2.1,2.2) (Ref. ABF-SUB-000457R02)

Load Factor: $LF := 1.4$

2. Calculate Loads

2.1. Factored Axial Demand in U-Rib from Global Axial Demand:

Max Nominal Axial Demand in Deck (ref. Figure 18 (Part 2) of Load Transfer Submittal Supplement): $P := 200MN$ $\quad P = 44961.79 \cdot kip$

Factored Axial load in one U-rib: $P_{h1} := LF \cdot \left(\frac{A_{Urib}}{A}\right) \cdot P$ $\quad P_{h1} = 531.04 \cdot kip$

2.2. Factored Axial Demand in U-Rib from Global Moment:

Global Moment (ref. Table 11) of the Final Bridge Geometry and Forces Calculations Submittal (ABF-SUB-001376R00): $M := (-279.14MN \cdot m)$ $\quad M = -279.14 \cdot MN \cdot m$

(negative moment implies tension in the top deck)

Flexural Stress in OBG equates to axial stress in top deck: $\sigma_f := \frac{M \cdot c_y}{I_{xx}}$ $\quad \sigma_f = -7.3 \cdot ksi$

Factored Axial load in one U-rib: $P_{h2} := LF \cdot \sigma_f \cdot A_{Urib}$ $\quad P_{h2} = -338.32 \cdot kip$

2.3. Factored Demands in Deck and U-Ribs from Grouting Equipment

Notes:

1. Input loads are from STAAD model "URib Continuous Beam Analysis After Load Transfer" and include a 10% Dynamic impact factor.
2. Moments and shear forces are determined from the STAAD model, which applies a percentage of the total wheel load to one U-RIb as demonstrated in the FEA analysis.

Max Total Negative Moment in deck (from STAAD): $M1_{max} := 234kip \cdot in$ $\quad M1_{max} = 19.5 \cdot kip \cdot ft$

Max Total Positive Moment in deck (from STAAD): $M2_{max} := 257kip \cdot in$ $\quad M2_{max} = 21.42 \cdot kip \cdot ft$

Max Total Shear in deck (from STAAD): $V_{max} := 21.6 \cdot kip$ $\quad V_{max} = 21.6 \cdot kip$

Maximum Negative Local Moment in one U-rib : $M1_{URib} := LF \cdot (M1_{max})$ $\quad M1_{URib} = 27.3 \cdot kip \cdot ft$

Maximum Positive Local Moment in one U-rib : $M2_{URib} := LF \cdot (M2_{max})$ $\quad M2_{URib} = 29.98 \cdot kip \cdot ft$

Maximum Local Shear in one U-rib : $V_{URib} := LF \cdot (V_{max})$ $\quad V_{URib} = 30.24 \cdot kip$

3. Design Checks

3.1. Check Combined Axial and Flexural Demands at Floorbeam:

Compression Resistance Factor: $\Phi_c := 0.9$

Effective Length Factor: $k := 1.0$

Unbraced Length: $l_{span} := 2500 \cdot mm = 98.43 \cdot in$

Allowable Axial Strength : $\lambda := \left(\frac{k \cdot l_{span}}{r_x \cdot \pi}\right)^2 \cdot \frac{F_y}{E} = 0.08$

Compressive Strength: $P_n := 0.66^{\lambda} \cdot F_y \cdot A_{Urib} = 7.14 \cdot MN$ $\quad P_n = 1604.39 \cdot kip$

Available Compressive Strength: $P_r := \Phi_c \cdot P_n = 6.42 \cdot MN$ $\quad P_r = 1443.95 \cdot kip$

Sum of Plate Slenderness Ratios: $BT := 2 \cdot \frac{150}{20} + \frac{300}{20} + 2 \cdot \frac{330}{12} = 85$

Flexural Resistance Factor: $\Phi_f := 1.0$

Open Rib Area: $A_{open} := 69524 \cdot mm^2$ $\quad A_{open} = 107.76 \cdot in^2$

Flexural Strength Bottom: $M_{nbot} := \frac{F_y \cdot I_{xxUrib}}{y_{bot}} \cdot \left[1 - \frac{.064 \cdot F_y \cdot I_{xxUrib} \cdot l_{span}}{y_{bot} \cdot A_{open} \cdot E} \cdot \left(\frac{BT}{I_{yyUrib}}\right)^{0.5}\right] = 0.39 \cdot MN \cdot m$

$M_{nbot} = 284.74 \cdot kip \cdot ft$

Available Flexural Strength Bottom: $M_{pbot} := \Phi_f \cdot M_{nbot} = 284.74 \cdot kip \cdot ft$

Unity Check Bottom Fiber at Floorbeam: $\frac{P_{h1}}{P_r} = 0.37$ $\quad \frac{P_{h2}}{P_r} = -0.23$ $\quad \frac{M1_{URib}}{M_{pbot}} = 0.1$

$DCR := \frac{P_{h1} + P_{h2}}{P_r} + \frac{8}{9}\left(\frac{M1_{URib}}{M_{pbot}}\right)$ $\quad DCR = 0.219$

3.2. Check Combined Axial and Flexural Demands at Midspan:

Flexural Strength Top: $M_{ntop} := \frac{F_y \cdot I_{xxUrib}}{y_{top}} \cdot \left[1 - \frac{.064 \cdot F_y \cdot I_{xxUrib} \cdot l_{span}}{y_{top} \cdot A_{open} \cdot E} \cdot \left(\frac{BT}{I_{yyUrib}} \right)^{0.5} \right] = 1.09 \cdot MN \cdot m$

$M_{ntop} = 803.01 \cdot kip \cdot ft$

Available Flexural Strength Top: $M_{ptop} := \Phi_f \cdot M_{ntop} = 803.01 \cdot kip \cdot ft$

Unity Check Top Fiber at Midspan: $\frac{P_{h1}}{P_r} = 0.37$ $\frac{P_{h2}}{P_r} = -0.23$ $\frac{M2_{URib}}{M_{ptop}} = 0.04$

$DCR := \frac{P_{h1} + P_{h2}}{P_r} + \frac{8}{9} \left(\frac{M2_{URib}}{M_{ptop}} \right)$ $DCR = 0.17$

3.3. Check Shear Demand:

Shear Resistance Factor: $\Phi_v := 1.0$

Allowable Shear Strength : $V_n := 0.58 F_y \cdot A_{Urib_shear}$ $V_n = 313.45 \cdot kip$

Available Shear Strength : $V_r := \Phi_v \cdot V_n = 1.39 \cdot MN$ $V_r = 313.45 \cdot kip$

Unity Check : $DCR := \frac{V_{URib}}{V_n}$ $DCR = 0.1$

American Bridge / FLUOR
A JOINT VENTURE

CONCRETE TRUCK
LOADING ON BOX GIRDER DECK (SAS)
AFTER LOAD TRANSFER

FINITE ELEMENT ANALYSIS LOAD DISTRIBUTION
AND DEFLECTION EVALUATION

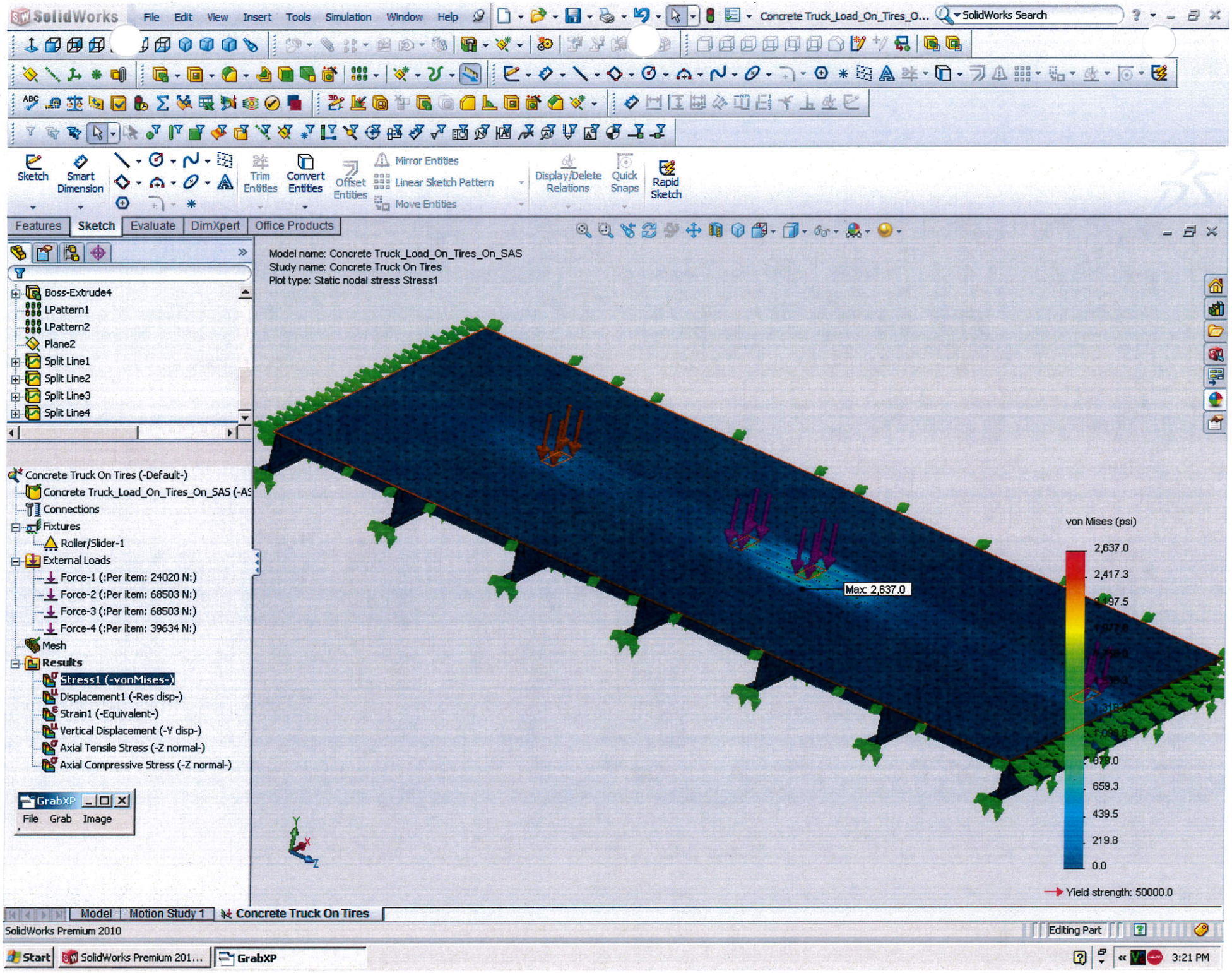
SolidWorks
File Edit View Insert Tools Simulation Window Help
Concrete Truck_Load_On_Tires_O...
SolidWorks Search
Sketch
Smart Dimension
Trim Entities
Convert Entities
Offset Entities
Mirror Entities
Linear Sketch Pattern
Move Entities
Display/Delete Relations
Quick Snaps
Rapid Sketch
Features
Sketch
Evaluate
DimXpert
Office Products
Model name: Concrete Truck_Load_On_Tires_On_SAS
Study name: Concrete Truck On Tires
Plot type: Static nodal stress Stress1
Boss-Extrude4
LPattern1
LPattern2
Plane2
Split Line1
Split Line2
Split Line3
Split Line4
Concrete Truck On Tires (-Default-)
Concrete Truck_Load_On_Tires_On_SAS (-AS
Connections
Fixtures
Roller/Slider-1
External Loads
Force-1 (:Per item: 24020 N:)
Force-2 (:Per item: 68503 N:)
Force-3 (:Per item: 68503 N:)
Force-4 (:Per item: 39634 N:)
Mesh
Results
Stress1 (-vonMises-)
Displacement1 (-Res disp-)
Strain1 (-Equivalent-)
Vertical Displacement (-Y disp-)
Axial Tensile Stress (-Z normal-)
Axial Compressive Stress (-Z normal-)
GrabXP
File Grab Image
Max: 2,637.0
von Mises (psi)
2,637.0
2,417.3
659.3
439.5
219.8
0.0
Yield strength: 50000.0
Model
Motion Study 1
Concrete Truck On Tires
SolidWorks Premium 2010
Editing Part
Start
SolidWorks Premium 201...
GrabXP
3:21 PM

Study name: Conc..te Truck On Tires
Plot type: Static displacement Vertical Displacement

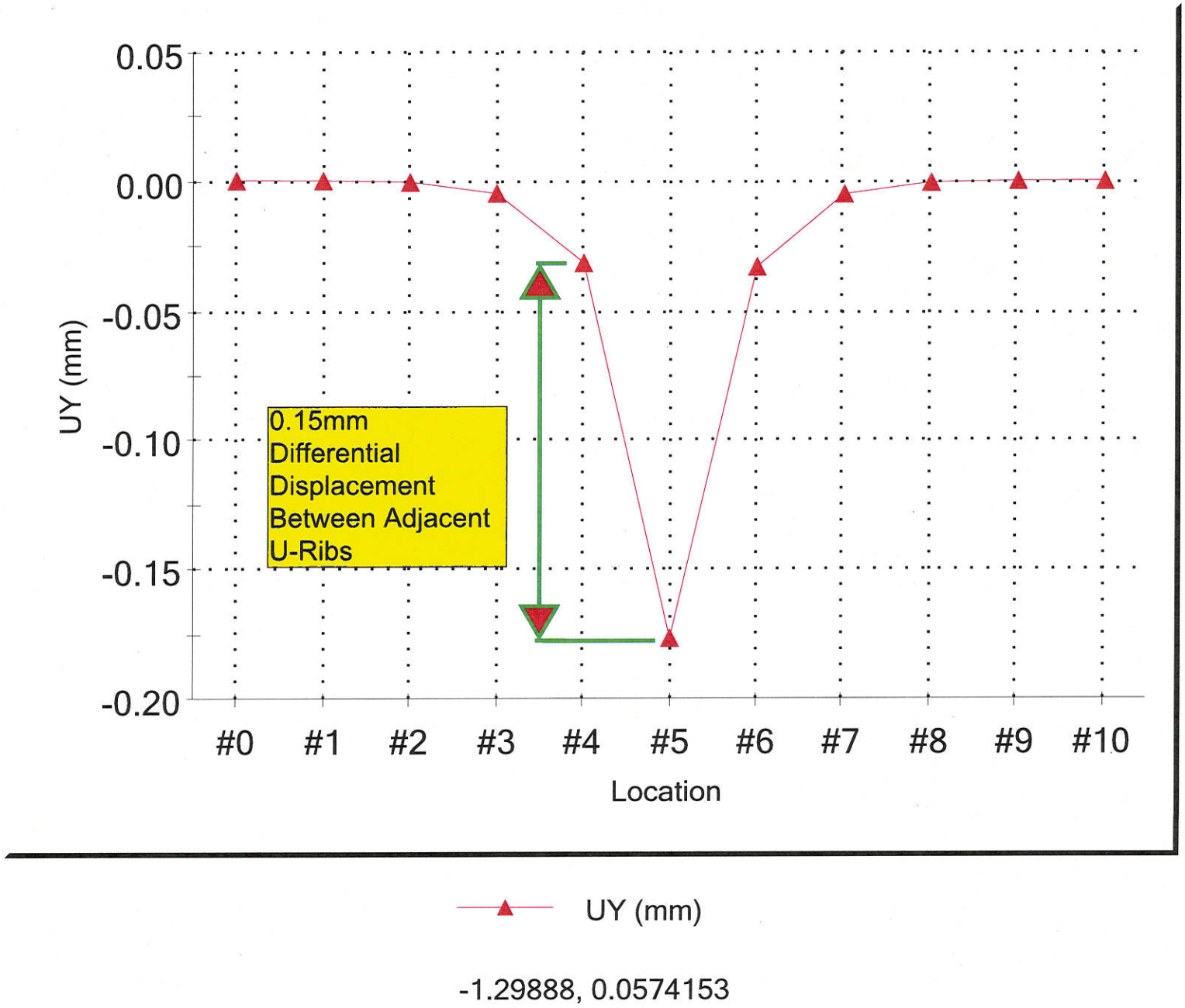

-1.29888, 0.0574153

Study name: Conc..te Truck On Tires
Plot type: Static nodal stress Axial Compressive Stress

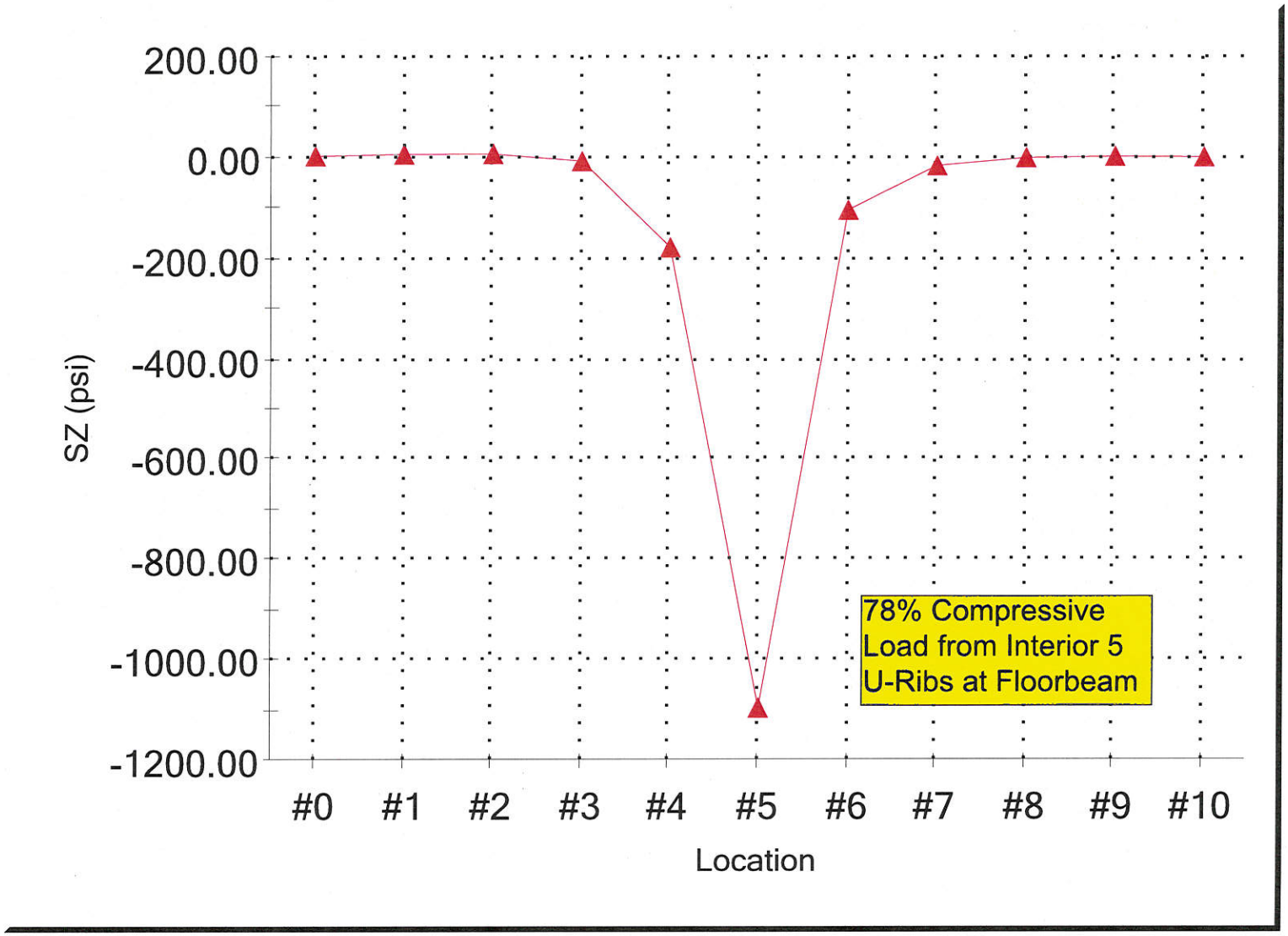

SZ (psi)

-0.695846, 33.8983

Study name: Conc..ste Truck On Tires
Plot type: Static nodal stress Axial Tensile Stress

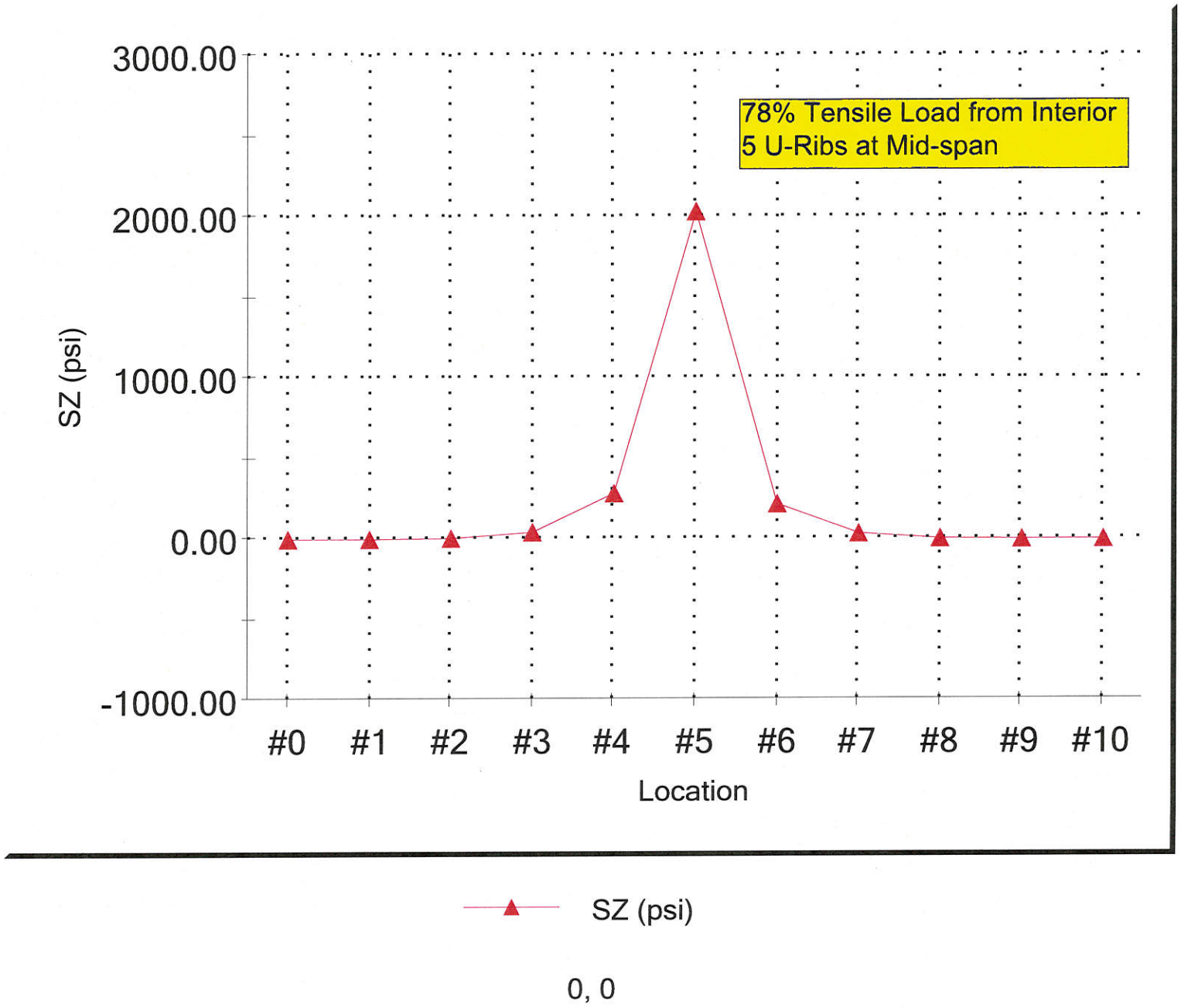

0, 0

American Bridge / FLUOR
A JOINT VENTURE

CONCRETE TRUCK AND WASH WATER LOADING ON TRANSITION SPAN DECK (SKYWAY)

U-RIB CONTINUOUS BEAM ANALYSIS

SKYWAY U-RIB ROLLING LOADS

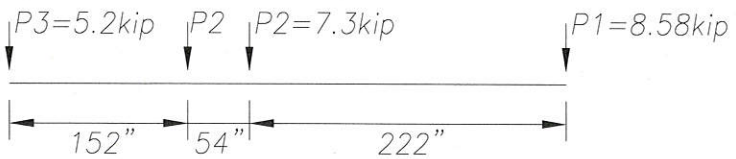

CASE 1 - CONCRETE TRUCK UNLOADED

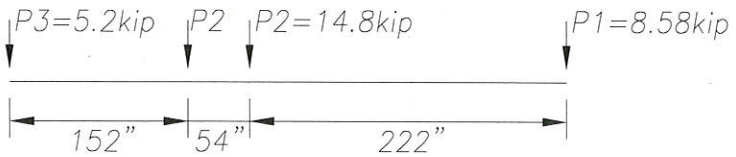

CASE 2 - CONCRETE TRUCK LOADED

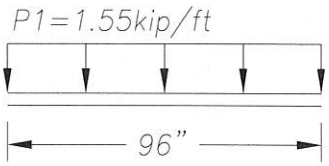

CASE 3 - 4000 GAL. WATER TANK LOADING

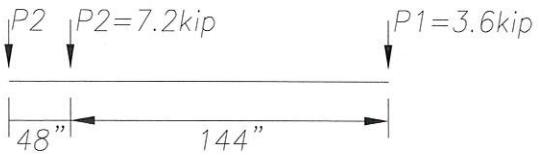

CASE 4 - WATER TRUCK LOADED (HS20-44)

P =WL*(1+IM)*DF
WL=WHEEL LOAD
IM=IMPACT FACTOR
(10% CASES 1-4)
DF=DISTRIBUTION FACTOR
(78% TRUCK LOAD ON TIRES)
(100% WATER TANK ON PAD OR MATS)

FOR APPROVAL

SAN FRANCISCO OAKLAND BAY BRIDGE
EAST SPAN SEISMIC SAFETY PROJECT
SELF ANCHORED SUSPENSION BRIDGE
(SUPERSTRUCTURE AND TOWER)

STATE OF CALIFORNIA
DEPARTMENT OF TRANSPORTATION
CONTRACT NO. 04-0120F4
BRIDGE NO. 34-0006L/R

DISTRICT	COUNTY	ROUTE	KILOMETER POST
04	SF	80	13.2 / 13.9

American Bridge FLUOR

Design By:	K. SMITH	Date:	10/2/12
Design Chk:	Z. LAURIA	Date:	10/4/12
Drawn By:	K. SMITH	Date:	10/2/12
Drawing Chk:	Z. LAURIA	Date:	10/4/12
In Charge Of:	R. KICK		
AB Job No.	660110		

U-RIB LOADING FROM PIER E2 GROUTING OPERATIONS
ON THE SKYWAY TRANSITION STRUCTURE

Scale:
NONE

Sheet No.
1 OF 1

Oct 05, 2012 - 1:32pm C: Documents and Settings ksmith Desktop E2 Bearing and Shear Key Grouting Plan Calculations Drawings DWG Concrete Truck OBG Deck Loading.dwg

Section Properties

Prop	Section	Area (in^2)	I_{yy} (in^4)	I_{zz} (in^4)	J (in^4)	Material
1	Prismatic General	29.920	1.92E+3	1.92E+3	524.690	STEEL

Materials

Mat	Name	E (kip/in^2)	ν	Density (kip/in^3)	α (1/°F)
1	STEEL	29E+3	0.300	0.000	6.5E -6
2	STAINLESSSTEEL	28E+3	0.300	0.000	9.9E -6
3	ALUMINUM	10E+3	0.330	0.000	12.8E -6
4	CONCRETE	3.15E+3	0.170	0.000	5.5E -6

Moving Load Definition : Type 1

Width (in)
-

Force (kip)	Distance (in)
5.200	-
7.300	152.000
7.300	54.000
8.580	222.000

Moving Load Definition : Type 2

Width (in)
-

Force (kip)	Distance (in)
5.200	-
14.800	152.000
14.800	54.000
8.580	222.000

Moving Load Definition : Type 3

Width (in)
-

Force (kip)	Distance (in)
1.550	-
1.550	12.000
1.550	12.000
1.550	12.000
1.550	12.000
1.550	12.000
1.550	12.000
1.550	12.000

Moving Load Definition : Type 4

Width (in)
-

Force (kip)	Distance (in)
7.200	-
7.200	48.000
3.600	144.000

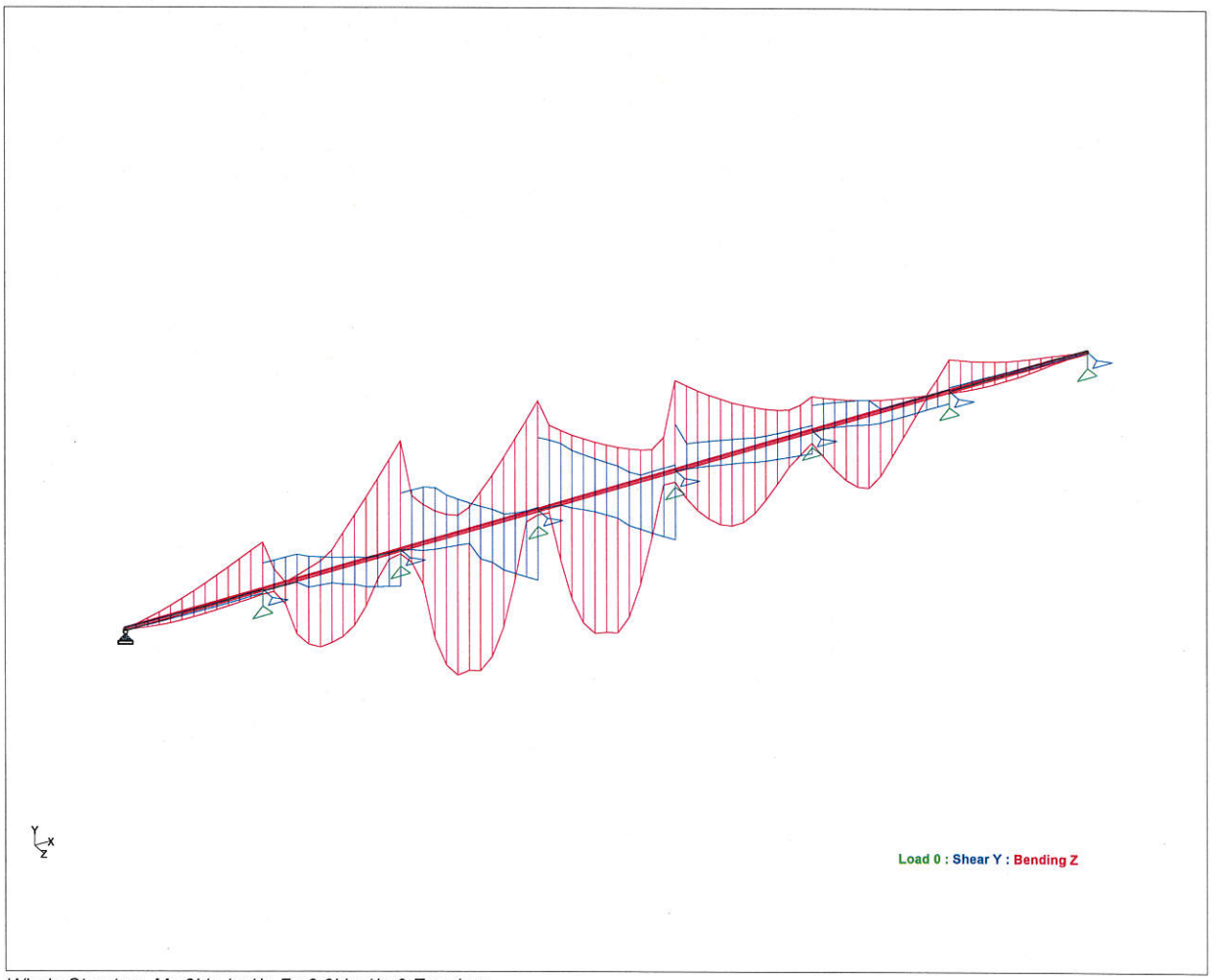

Whole Structure Mz 3kip-in:1in Fy 0.3kip:1in 0 Envelope

Beam Force Detail Summary

Sign convention as diagrams:- positive above line, negative below line except Fx where positive is compression. Distance d is given from beam end A.

				Axial	Shear		Torsion	Bending	
	Beam	L/C	d (in)	Fx (kip)	Fy (kip)	Fz (kip)	Mx (kip-in)	My (kip-in)	Mz (kip-in)
Max Fx	1	1:SELF WEIGH	0.000	**0.000**	0.444	0.000	0.000	0.000	0.000
Min Fx	1	1:SELF WEIGH	0.000	**0.000**	0.444	0.000	0.000	0.000	0.000
Max Fy	4	63:LOAD GENI	0.000	0.000	**24.739**	0.000	0.000	0.000	215.798
Min Fy	3	53:LOAD GENI	157.500	0.000	**-23.924**	0.000	0.000	0.000	191.586
Max Fz	1	1:SELF WEIGH	0.000	0.000	0.444	**0.000**	0.000	0.000	0.000
Min Fz	1	1:SELF WEIGH	0.000	0.000	0.444	**0.000**	0.000	0.000	0.000
Max Mx	1	1:SELF WEIGH	0.000	0.000	0.444	0.000	**0.000**	0.000	0.000
Min Mx	1	1:SELF WEIGH	0.000	0.000	0.444	0.000	**0.000**	0.000	0.000
Max My	1	1:SELF WEIGH	0.000	0.000	0.444	0.000	0.000	**0.000**	0.000
Min My	1	1:SELF WEIGH	0.000	0.000	0.444	0.000	0.000	**0.000**	0.000
Max Mz	3	70:LOAD GENI	157.500	0.000	-4.176	0.000	0.000	0.000	**372.076**
Min Mz	4	69:LOAD GENI	91.350	0.000	2.873	0.000	0.000	0.000	**-497.375**

American Bridge / FLUOR
A JOINT VENTURE

CONCRETE TRUCK AND WASH WATER LOADING ON TRANSITION SPAN DECK (SKYWAY)

U-RIB DECK CAPACITY

Pier E2 Grouting Equipment Loading on Skyway Transition Structure - URib Check

PURPOSE:

To check the stresses on the Skyway Transition Structure Deck Plate and U-Ribs due to use of the Pier E2 Bearing and Shear Key grouting equipment in the configurations shown on drawing DE352AJ.

DESIGN APPROACH:

The applied demands to the Skyway Transition Structure deck from the grouting equipment will be compared against the capacity of the deck using AASHTO LRFD Edition, 2005.

These calcs look at the loads onto the deck from a concrete truck loaded with 10 cubic yards of grout, a water truck and a water tank.

DESIGN STANDARD:

AASHTO LRFD Edition, 2005

REFERENCES:

STAAD model "URib Continuous Beam Analysis, Skyway U-Rib" and attached report.
Skyway model provided in the response to ABF-RFI-002451R00.
Skyway Reaction provided in ABF-CAL-TRN-004798R00.
Drawing DE352AJ

CONTENTS LISTED BY SECTION:

1. Material Properties and Basic Member Dimensions
2. Loads
3. Design Checks

1. Material Properties and Basic Member Dimensions:

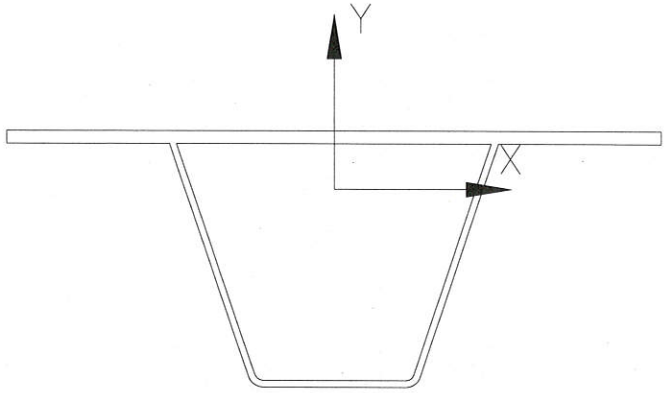

Area:	19302.9399
Perimeter:	3240.8695
Bounding box:	X: -400.0000 -- 400.0000
	Y: -243.8664 -- 72.1336
Centroid:	X: 0.0000
	Y: 0.0000
Moments of inertia:	X: 218392847.5918
	Y: 798288510.9273
Product of inertia:	XY: 0.0000
Radii of gyration:	X: 106.3671
	Y: 203.3613

Yield Strength of OBG steel: $F_y := 345 \cdot MPa$

Modulus of Elasticity: $E := 29000 \cdot ksi$

Area of Urib: $A_{Urib} := 19303 \cdot mm^2$

Shear Area of Urib: $A_{Urib_shear} := 4800 \cdot mm^2$

Strong Axis Moment of Inertia: $I_{xxUrib} := 218392847 mm^4 = 524.69 \cdot in^4$

Weak Axis Moment of Inertia: $I_{yyUrib} := 798288511 mm^4 = 1917.9 \cdot in^4$

Minimum Radius of Gyration: $r_x := 106.36 \cdot mm = 4.19 \cdot in$

Distance from Neutral Axis to Top Fiber: $y_{top} := 72.1 \cdot mm = 2.84 \cdot in$

Distance from Neutral Axis to Bottom Fiber: $y_{bot} := 243.9 \cdot mm = 9.6 \cdot in$

Skyway Transition Structure Moment of Inertia: $I_{xx} := 7.33 \cdot m^4$

Skyway Transition Structure Cross-Sectional Area: $A := 1.733 m^2$

Skyway Transition Structure Neutral Axis: $c_y := 2.03 \cdot m$

The Skyway Transition Section 78m from Pier E3 has section properties Ixx, A, and cy that produce the greatest Axial load (P.h1, P.h2) in one deck rib due to the global dead loads (see sections 2.1,2.2)

Load Factor: $LF := 1.4$

2. Calculate Loads

2.1. Factored Axial Demand in one deck rib from Post-Tensioning Tendons:

Max Nominal Axial Demand in Deck (ref. Skyway Contract Drawing No. 580, Cantilever Tendon Layout E3E(1)): $P := 82.6MN$ $\quad P = 18569.22 \cdot kip$

Factored Axial load in one U-rib: $P_{h1} := LF \cdot \left(\frac{A_{Urib}}{A}\right) \cdot P$ $\quad P_{h1} = 289.57 \cdot kip$

2.2. Factored Axial Demand in one deck rib from Global Moment:

Global Moment is calculated by combining the moments from the self weight of the transition structure and the measured reaction on Temporary Tower A (ref. ABF-CAL-TRN-004798R00). $M := 16MN \cdot m$ $\quad M = 16 \cdot MN \cdot m$

(negative moment implies tension in the top deck)

Flexural Stress in OBG equates to axial stress in top deck: $\sigma_f := \frac{M \cdot c_y}{I_{xx}}$ $\quad \sigma_f = 0.64 \cdot ksi$

Factored Axial load in one U-rib: $P_{h2} := LF \cdot \sigma_f \cdot A_{Urib}$ $\quad P_{h2} = 26.92 \cdot kip$

2.3. Factored Demands in Deck and U-Ribs from Grouting Equipment

Notes:

1. Input loads are from STAAD model "Continuous Beam Analysis, Skyway U-Rib" and include a 10% Dynamic impact factor.
2. Moments and shear forces are determined from the STAAD model, which applies a percentage of the total wheel load to one U-RIb as demonstrated in the FEA analysis.

Max Total Negative Moment in deck (from STAAD): $M1_{max} := 372kip \cdot in$ $\quad M1_{max} = 31 \cdot kip \cdot ft$

Max Total Positive Moment in deck (from STAAD): $M2_{max} := 497.4kip \cdot in$ $\quad M2_{max} = 41.45 \cdot kip \cdot ft$

Max Total Shear in deck (from STAAD): $V_{max} := 24.74 \cdot kip$ $\quad V_{max} = 24.74 \cdot kip$

Maximum Negative Local Moment in one U-rib : $M1_{URib} := LF \cdot (M1_{max})$ $\quad M1_{URib} = 43.4 \cdot kip \cdot ft$

Maximum Positive Local Moment in one U-rib : $M2_{URib} := LF \cdot (M2_{max})$ $\quad M2_{URib} = 58.03 \cdot kip \cdot ft$

Maximum Local Shear in one U-rib : $V_{URib} := LF \cdot (V_{max})$ $\quad V_{URib} = 34.64 \cdot kip$

3. Design Checks

3.1. Check combined Axial and Flexural Demands at Floorbeam:

Compression Resistance Factor: $\Phi_c := 0.9$

Effective Length Factor: $k := 1.0$

Unbraced Length: $l_{span} := 4000 \cdot mm = 157.48 \cdot in$

Allowable Axial Strength : $\lambda := \left(\frac{k \cdot l_{span}}{r_x \cdot \pi}\right)^2 \cdot \frac{F_y}{E} = 0.25$

Compressive Strength: $P_n := 0.66^{\lambda} \cdot F_y \cdot A_{Urib} = 6.01 \cdot MN$ $\quad P_n = 1350.94 \cdot kip$

Available Compressive Strength: $P_r := \Phi_c \cdot P_n = 5.41 \cdot MN$ $\quad P_r = 1215.85 \cdot kip$

Sum of Plate Slenderness Ratios: $BT := 2 \cdot \frac{200}{16} + \frac{400}{16} + 2 \cdot \frac{316}{8} + \frac{200}{8} = 154$

Flexural Resistance Factor: $\Phi_f := 1.0$

Open Rib Area: $A_{open} := 83404 \cdot mm^2$ $\quad A_{open} = 129.28 \cdot in^2$

Flexural Strength Bottom: $M_{nbot} := \frac{F_y \cdot I_{xxUrib}}{y_{bot}} \cdot \left[1 - \frac{.064 \cdot F_y \cdot I_{xxUrib} \cdot l_{span}}{y_{bot} \cdot A_{open} \cdot E} \cdot \left(\frac{BT}{I_{yyUrib}}\right)^{0.5}\right] = 0.31 \cdot MN \cdot m$

$M_{nbot} = 227.37 \cdot kip \cdot ft$

Available Flexural Strength Bottom: $M_{pbot} := \Phi_f \cdot M_{nbot} = 227.37 \cdot kip \cdot ft$

Unity Check Bottom Fiber at Floorbeam: $\frac{P_{h1}}{P_r} = 0.24$ $\quad \frac{P_{h2}}{P_r} = 0.02$ $\quad \frac{M1_{URib}}{M_{pbot}} = 0.19$

$DCR := \frac{P_{h1} + P_{h2}}{P_r} + \frac{8}{9}\left(\frac{M1_{URib}}{M_{pbot}}\right)$ $\quad DCR = 0.43$

3.2. Check Combined Axial and Flexural Demands at Midspan:

Flexural Strength Top: $M_{ntop} := \frac{F_y \cdot I_{xxUrib}}{y_{top}} \cdot \left[1 - \frac{.064 \cdot F_y \cdot I_{xxUrib} \cdot l_{span}}{y_{top} \cdot A_{open} \cdot E} \cdot \left(\frac{BT}{I_{yyUrib}} \right)^{0.5} \right] = 1.04 \cdot MN \cdot m$

$M_{ntop} = 765.33 \cdot kip \cdot ft$

Available Flexural Strength Top: $M_{ptop} := \Phi_f \cdot M_{ntop} = 765.33 \cdot kip \cdot ft$

Unity Check Top Fiber at Midspan: $\frac{P_{h1}}{P_r} = 0.24$ $\frac{P_{h2}}{P_r} = 0.02$ $\frac{M2_{URib}}{M_{ptop}} = 0.08$

$DCR := \frac{P_{h1} + P_{h2}}{P_r} + \frac{8}{9} \left(\frac{M2_{URib}}{M_{ptop}} \right)$ $DCR = 0.33$

3.3. Check Shear Demand:

Shear Resistance Factor: $\Phi_v := 1.0$

Allowable Shear Strength : $V_n := 0.58 F_y \cdot A_{Urib_shear}$ $V_n = 215.92 \cdot kip$

Available Shear Strength : $V_r := \Phi_v \cdot V_n = 0.96 \cdot MN$ $V_r = 215.92 \cdot kip$

Unity Check : $DCR := \frac{V_{URib}}{V_n}$ $DCR = 0.16$

American Bridge / FLUOR
A JOINT VENTURE

CONCRETE TRUCK LOADING ON TRANSITION SPAN DECK (SKYWAY)

U-RIB FINITE ELEMENT ANALYSIS LOAD DISTRIBUTION AND DEFLECTION EVALUATION

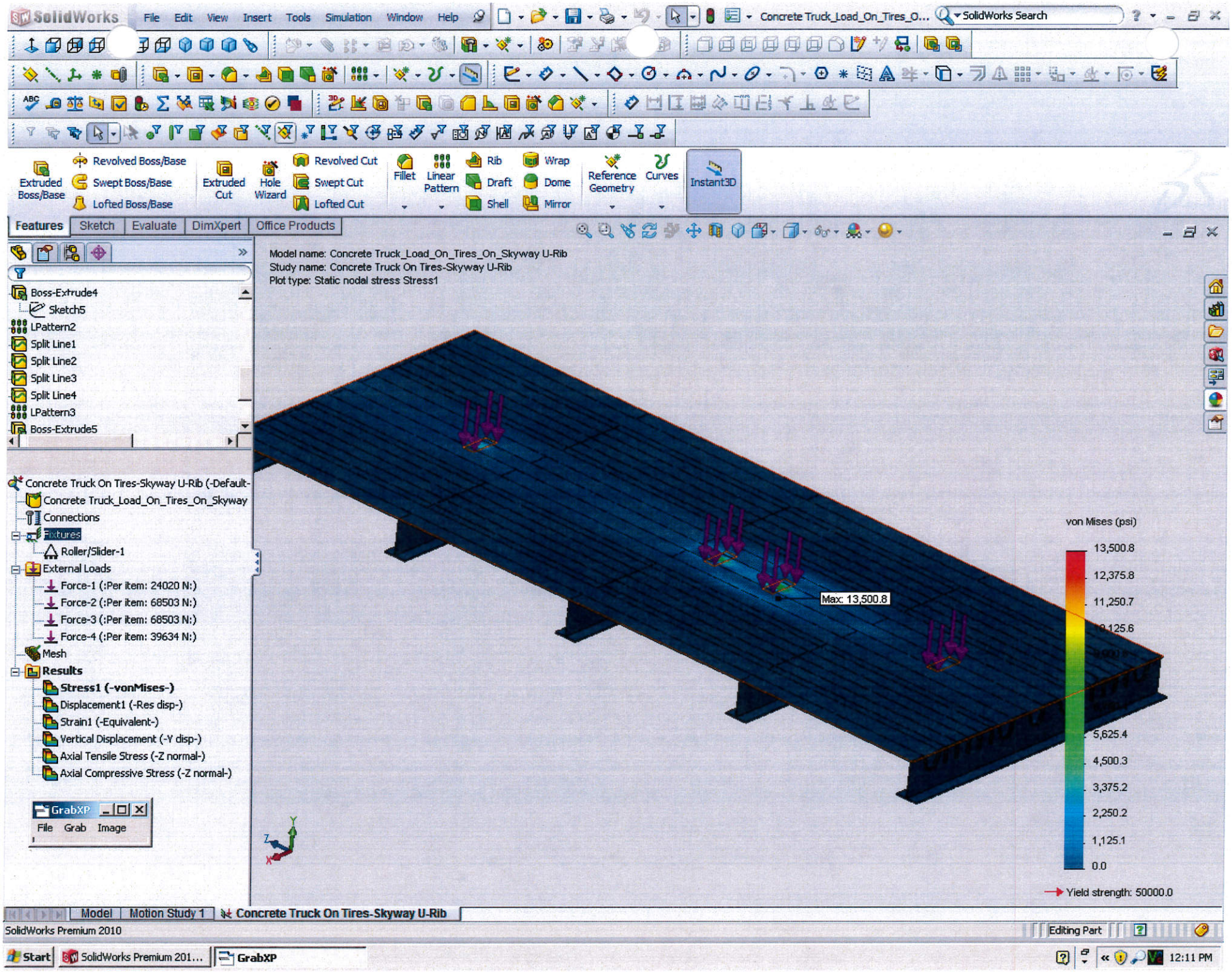
SolidWorks
File Edit View Insert Tools Simulation Window Help
Concrete Truck_Load_On_Tires_O...
SolidWorks Search
Extruded Boss/Base
Revolved Boss/Base
Swept Boss/Base
Lofted Boss/Base
Extruded Cut
Hole Wizard
Revolved Cut
Swept Cut
Lofted Cut
Fillet
Linear Pattern
Rib
Draft
Shell
Wrap
Dome
Mirror
Reference Geometry
Curves
Instant3D
Features
Sketch
Evaluate
DimXpert
Office Products
Model name: Concrete Truck_Load_On_Tires_On_Skyway U-Rib
Study name: Concrete Truck On Tires-Skyway U-Rib
Plot type: Static nodal stress Stress1
Boss-Extrude4
Sketch5
LPattern2
Split Line1
Split Line2
Split Line3
Split Line4
LPattern3
Boss-Extrude5
Concrete Truck On Tires-Skyway U-Rib (-Default-
Concrete Truck_Load_On_Tires_On_Skyway
Connections
Fixtures
Roller/Slider-1
External Loads
Force-1 (:Per item: 24020 N:)
Force-2 (:Per item: 68503 N:)
Force-3 (:Per item: 68503 N:)
Force-4 (:Per item: 39634 N:)
Mesh
Results
Stress1 (-vonMises-)
Displacement1 (-Res disp-)
Strain1 (-Equivalent-)
Vertical Displacement (-Y disp-)
Axial Tensile Stress (-Z normal-)
Axial Compressive Stress (-Z normal-)
GrabXP
File Grab Image
Max: 13,500.8
von Mises (psi)
13,500.8
12,375.8
11,250.7
5,625.4
4,500.3
3,375.2
2,250.2
1,125.1
0.0
Yield strength: 50000.0
Model
Motion Study 1
Concrete Truck On Tires-Skyway U-Rib
SolidWorks Premium 2010
Editing Part
Start
SolidWorks Premium 201...
GrabXP
12:11 PM

Study name: Concrete Truck On Tires-Skyway U-Rib
Plot type: Static displacement Vertical Displacement

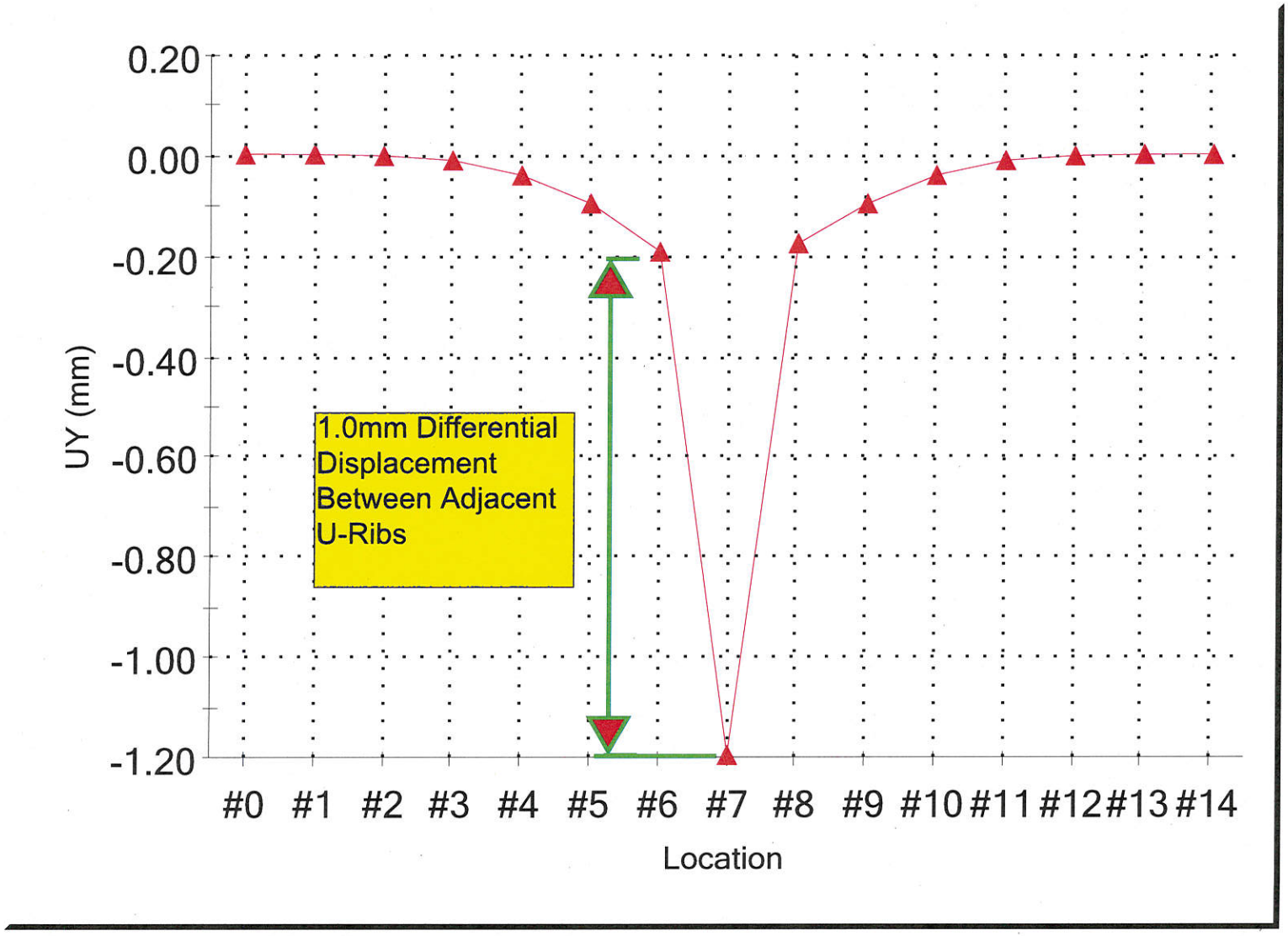

UY (mm)

-2.55307, 0.229661

Study name: Concrete Truck On Tires-Skyway U-Rib
Plot type: Static nodal stress Axial Tensile Stress

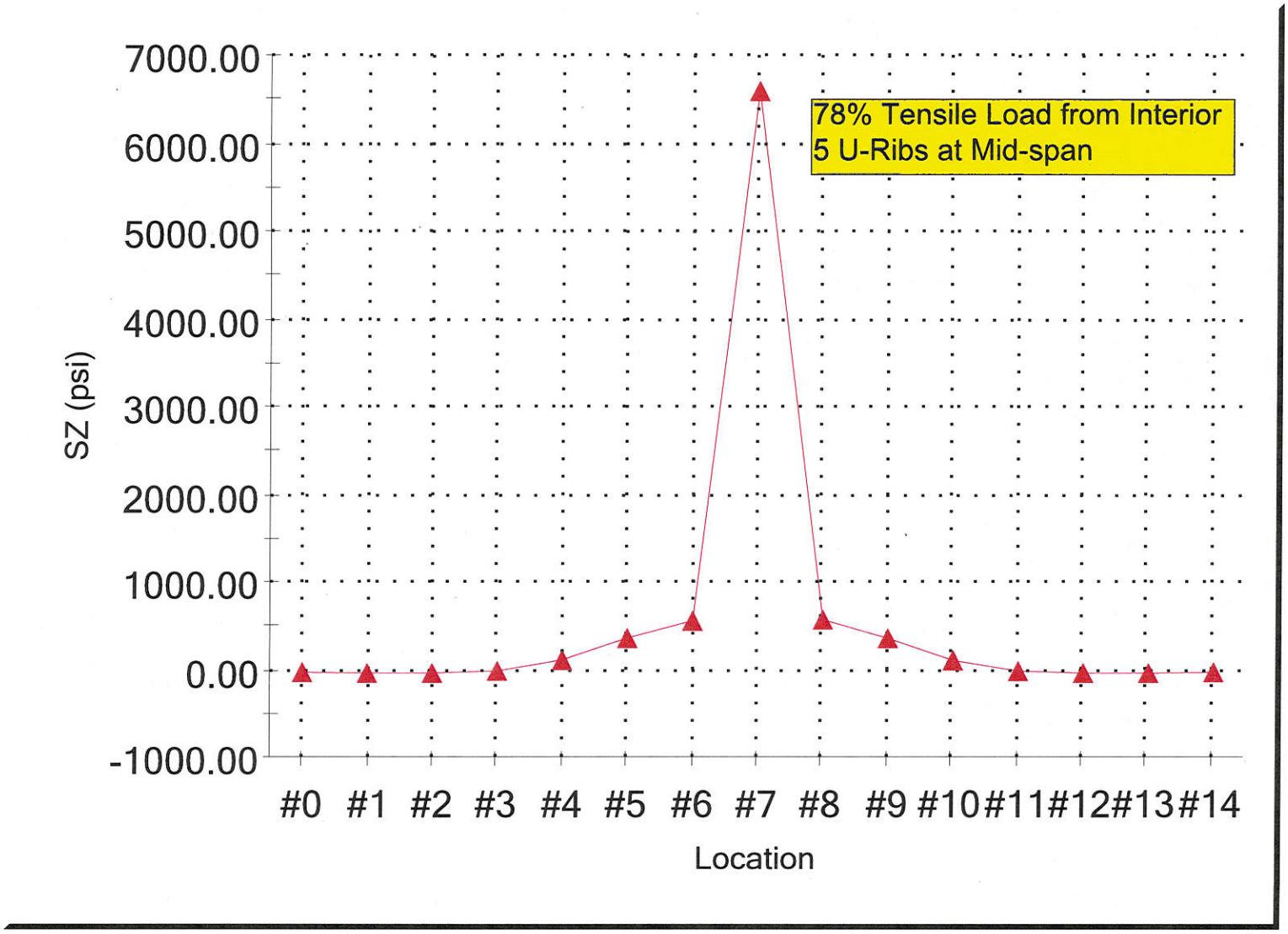

SZ (psi)

-0.945104, 6457.63

American Bridge / FLUOR
A JOINT VENTURE

CONCRETE TRUCK AND WASH WATER LOADING ON TRANSITION SPAN DECK (SKYWAY)

PLATE STIFFENER CONTINUOUS BEAM ANALYSIS

SKYWAY STIFFENER ROLLING LOADS

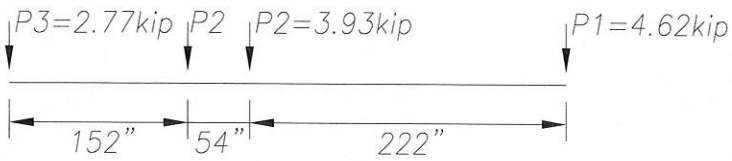

CASE 1 - CONCRETE TRUCK UNLOADED

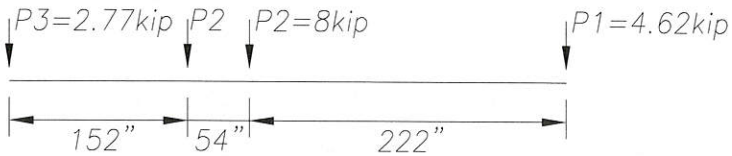

CASE 2 - CONCRETE TRUCK LOADED

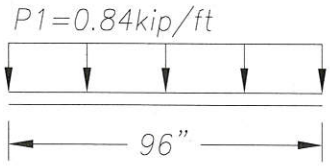

CASE 3 - 4000 GAL. WATER TANK LOADING

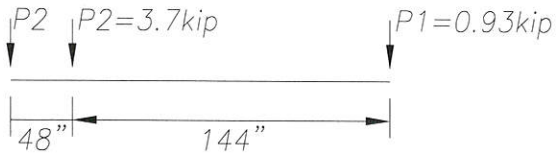

CASE 4 - WATER TRUCK LOADED (HS20-44)

P =WL*(1+IM)*DF
WL=WHEEL LOAD
IM=IMPACT FACTOR
(10% CASES 1-4)
DF=DISTRIBUTION FACTOR
(42% TRUCK LOAD ON TIRES)
(100% WATER TANK ON PAD OR MATS)

FOR APPROVAL

SAN FRANCISCO OAKLAND BAY BRIDGE
EAST SPAN SEISMIC SAFETY PROJECT
SELF ANCHORED SUSPENSION BRIDGE
(SUPERSTRUCTURE AND TOWER)

STATE OF CALIFORNIA
DEPARTMENT OF TRANSPORTATION
CONTRACT NO. 04-0120F4
BRIDGE NO. 34-0006L/R

DISTRICT	COUNTY	ROUTE	KILOMETER POST
04	SF	80	13.2 / 13.9

American Bridge FLUOR A JOINT VENTURE

Design By:	K. SMITH	Date:	10/2/12
Design Chk:	Z. LAURIA	Date:	10/4/12
Drawn By:	K. SMITH	Date:	10/2/12
Drawing Chk:	Z. LAURIA	Date:	10/4/12
In Charge Of:	R. KICK		
AB Job No.	660110		

PLATE STIFFENER LOADING FROM PIER E2 GROUTING OPERATIONS ON THE SKYWAY TRANSITION STRUCTURE

Scale: NONE

Sheet No. 1 OF 1

Oct 05, 2012 – 5:02pm C: Documents and Settings ksmith Desktop E2 Bearing and Shear Key Grouting Plan Calculations Drawings DWG Concrete Truck OBG Deck Loading.dwg

Section Properties

Prop	Section	Area (in^2)	I_{yy} (in^4)	I_{zz} (in^4)	J (in^4)	Material
1	Prismatic General	14.880	86.740	86.740	230.680	STEEL

Materials

Mat	Name	E (kip/in^2)	ν	Density (kip/in^3)	α (1/°F)
1	STEEL	29E+3	0.300	0.000	6.5E -6
2	STAINLESSSTEEL	28E+3	0.300	0.000	9.9E -6
3	ALUMINUM	10E+3	0.330	0.000	12.8E -6
4	CONCRETE	3.15E+3	0.170	0.000	5.5E -6

Moving Load Definition : Type 1

Width (in)
-

Force (kip)	Distance (in)
2.770	-
3.930	152.000
3.930	54.000
4.620	222.000

Moving Load Definition : Type 2

Width (in)
-

Force (kip)	Distance (in)
2.770	-
8.000	152.000
8.000	54.000
4.620	222.000

Moving Load Definition : Type 3

Width (in)
-

Force (kip)	Distance (in)
0.840	-
0.840	12.000
0.840	12.000
0.840	12.000
0.840	12.000
0.840	12.000
0.840	12.000
0.840	12.000

Moving Load Definition : Type 4

Width (in)
-

Force (kip)	Distance (in)
3.700	-
3.700	48.000
0.930	144.000

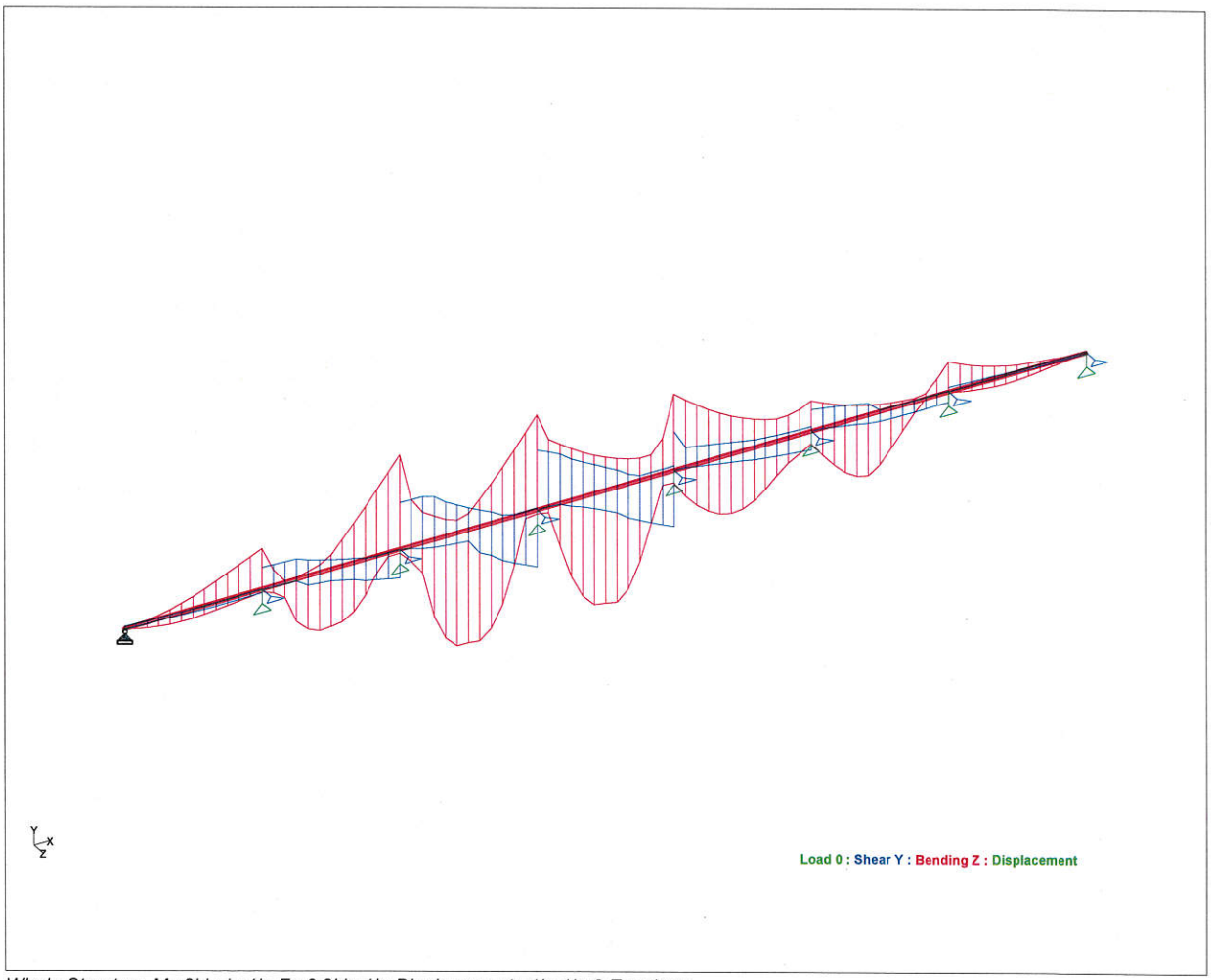

Whole Structure Mz 2kip-in:1in Fy 0.2kip:1in Displacements 1in:1in 0 Envelope

Beam Force Detail Summary

Sign convention as diagrams:- positive above line, negative below line except Fx where positive is compression. Distance d is given from beam end A.

				Axial	Shear		Torsion	Bending	
	Beam	L/C	d (in)	Fx (kip)	Fy (kip)	Fz (kip)	Mx (kip-in)	My (kip-in)	Mz (kip-in)
Max Fx	1	1:SELF WEIGH	0.000	**0.000**	0.440	0.000	0.000	0.000	-0.000
Min Fx	1	1:SELF WEIGH	0.000	**0.000**	0.440	0.000	0.000	0.000	-0.000
Max Fy	4	63:LOAD GENI	0.000	0.000	**13.566**	0.000	0.000	0.000	123.285
Min Fy	3	53:LOAD GENI	157.500	0.000	**-12.968**	0.000	0.000	0.000	105.443
Max Fz	1	1:SELF WEIGH	0.000	0.000	0.440	**0.000**	0.000	0.000	-0.000
Min Fz	1	1:SELF WEIGH	0.000	0.000	0.440	**0.000**	0.000	0.000	-0.000
Max Mx	1	1:SELF WEIGH	0.000	0.000	0.440	0.000	**0.000**	0.000	-0.000
Min Mx	1	1:SELF WEIGH	0.000	0.000	0.440	0.000	**0.000**	0.000	-0.000
Max My	1	1:SELF WEIGH	0.000	0.000	0.440	0.000	0.000	**0.000**	-0.000
Min My	1	1:SELF WEIGH	0.000	0.000	0.440	0.000	0.000	**0.000**	-0.000
Max Mz	3	70:LOAD GENI	157.500	0.000	-2.504	0.000	0.000	0.000	**216.443**
Min Mz	4	69:LOAD GENI	91.350	0.000	1.474	0.000	0.000	0.000	**-262.441**

American Bridge / FLUOR
A JOINT VENTURE

CONCRETE TRUCK AND WASH WATER LOADING ON TRANSITION SPAN DECK (SKYWAY)

PLATE STIFFENER DECK CAPACITY

Pier E2 Grouting Equipment Loading on Skyway Transition Structure - Plate Stiffener Check

PURPOSE:

To check the stresses on the Skyway Transition Structure Deck Plate and plate stiffeners due to use of the Pier E2 Bearing and Shear Key grouting equipment in the configurations shown on drawing DE352AJ.

DESIGN APPROACH:

The applied demands to the Skyway Transition Structure deck from the grouting equipment will be compared against the capacity of the deck using AASHTO LRFD Edition, 2005.

These calcs look at the loads onto the deck from a concrete truck loaded with 10 cubic yards of grout, a water truck and a water tank.

DESIGN STANDARD:

AASHTO LRFD Edition, 2005

REFERENCES:

STAAD model "URib Continuous Beam Analysis, Skyway Plate Stiffener" and attached report.
Skyway model provided in the response to ABF-RFI-002451R00.
Skyway Reaction provided in ABF-CAL-TRN-004798R00.
Drawing DE352AJ

CONTENTS LISTED BY SECTION:

1. Material Properties and Basic Member Dimensions
2. Loads
3. Design Checks

1. Material Properties and Basic Member Dimensions:

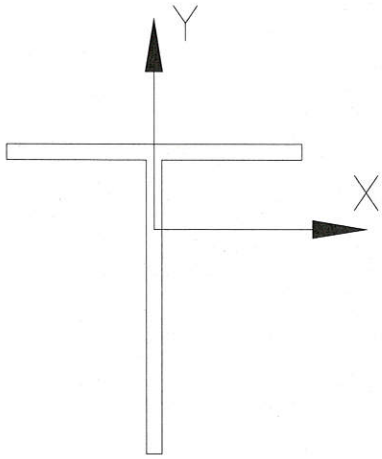

Area:	9600.0000
Perimeter:	1232.0000
Bounding box:	X: −150.0000 -- 150.0000
	Y: −229.0000 -- 87.0000
Centroid:	X: 0.0000
	Y: 0.0000
Moments of inertia:	X: 96016000.0000
	Y: 36102400.0000
Product of inertia:	XY: 0.0000
Radii of gyration:	X: 100.0083
	Y: 61.3243

Yield Strength of OBG steel: $F_y := 345 \cdot MPa$

Modulus of Elasticity: $E := 29000 \cdot ksi$

Area of Tee: $A_{Tee} := 9600 \cdot mm^2$

Shear Area of Urib: $A_{Tee_shear} := 4800 \cdot mm^2$

Strong Axis Moment of Inertia: $I_{xxTee} := 96016000 mm^4 = 230.68 \cdot in^4$

Weak Axis Moment of Inertia: $I_{yyTee} := 36102400 mm^4 = 86.74 \cdot in^4$

Minimum Radius of Gyration: $r_x := 100 \cdot mm = 3.94 \cdot in$

Distance from Neutral Axis to Top Fiber: $y_{top} := 87 \cdot mm = 3.43 \cdot in$

Distance from Neutral Axis to Bottom Fiber: $y_{bot} := 229 \cdot mm = 9.02 \cdot in$

Plastic Section Modulus: $Z_x := 758400 \cdot mm^3 = 46.28\, in^3$

Skyway Transition Structure Moment of Inertia: $I_{xx} := 7.33 \cdot m^4$

Skyway Transition Structure Cross-Sectional Area: $A := 1.733 m^2$

Skyway Transition Structure Neutral Axis: $c_y := 2.03 \cdot m$

The Skyway Transition Section 78m from Pier E3 has section properties Ixx, A, and cy that produce the greatest Axial load (P.h1, P.h2) in one deck rib due to the global dead loads (see sections 2.1,2.2)

Load Factor: $LF := 1.4$

2. Calculate Loads

2.1. Factored Axial Demand in one deck rib from Post-Tensioning Tendons:

Max Nominal Axial Demand in Deck (ref. Skyway Contract Drawing No. 580, Cantilever Tendon Layout E3E(1)): $P := 82.6MN$ $\quad P = 18569.22 \cdot kip$

Factored Axial load in one Tee: $P_{h1} := LF \cdot \left(\frac{A_{Tee}}{A}\right) \cdot P$ $\quad P_{h1} = 144.01 \cdot kip$

2.2. Factored Axial Demand in one deck rib from Global Moment:

Global Moment is calculated by combining the moments from the self weight of the transition structure and the measured reaction on Temporary Tower A (ref. ABF-CAL-TRN-004798R00). $M := 16MN \cdot m$ $\quad M = 16 \cdot MN \cdot m$

(negative moment implies tension in the top deck)

Flexural Stress in OBG equates to axial stress in top deck: $\sigma_f := \frac{M \cdot c_y}{I_{xx}}$ $\quad \sigma_f = 0.64 \cdot ksi$

Factored Axial load in one Tee: $P_{h2} := LF \cdot \sigma_f \cdot A_{Tee}$ $\quad P_{h2} = 13.39 \cdot kip$

2.3. Factored Demands in Deck and U-Ribs from Grouting Equipment

Notes:

1. Input loads are from STAAD model "Continuous Beam Analysis, Skyway Stiffener" and include a 10% Dynamic impact factor.
2. Moments and shear forces are determined from the STAAD model, which applies a percentage of the total wheel load to one Tee section as demonstrated in the FEA analysis.

Max Total Negative Moment in deck (from STAAD): $M1_{max} := 216kip \cdot in$ $\quad M1_{max} = 18 \cdot kip \cdot ft$

Max Total Positive Moment in deck (from STAAD): $M2_{max} := 262kip \cdot in$ $\quad M2_{max} = 21.83 \cdot kip \cdot ft$

Max Total Shear in deck (from STAAD): $V_{max} := 13.6 \cdot kip$ $\quad V_{max} = 13.6 \cdot kip$

Maximum Negative Local Moment in one Tee : $M1_{URib} := LF \cdot (M1_{max})$ $\quad M1_{URib} = 25.2 \cdot kip \cdot ft$

Maximum Positive Local Moment in one Tee : $M2_{URib} := LF \cdot (M2_{max})$ $\quad M2_{URib} = 30.57 \cdot kip \cdot ft$

Maximum Local Shear in one Tee : $V_{URib} := LF \cdot (V_{max})$ $\quad V_{URib} = 19.04 \cdot kip$

3. Design Checks

3.1. Check combined Axial and Flexural Demands at Floorbeam:

Compression Resistance Factor: $\Phi_c := 0.9$

Effective Length Factor: $k := 1.0$

Unbraced Length: $l_{span} := 4000 \cdot mm = 157.48 \cdot in$

Allowable Axial Strength : $\lambda := \left(\frac{k \cdot l_{span}}{r_x \cdot \pi}\right)^2 \cdot \frac{F_y}{E} = 0.28$

Compressive Strength: $P_n := 0.66^{\lambda} \cdot F_y \cdot A_{Tee} = 2.95 \cdot MN$ $\quad P_n = 662.87 \cdot kip$

Available Compressive Strength: $P_r := \Phi_c \cdot P_n = 2.65 \cdot MN$ $\quad P_r = 596.58 \cdot kip$

Flange Slenderness Ratio: $\lambda_f := \frac{150}{16} = 9.38$

Limiting Slenderness Ratio for Compact Flange: $\lambda_{pf} := 0.38 \sqrt{\frac{E}{F_y}} = 9.15$

Limiting Slenderness Ratio for Non-Compact Flange: $\lambda_{rf} := 0.83 \sqrt{\frac{E}{F_y}} = 19.98$

Flexural Resistance Factor: $\Phi_f := 1.0$

Flexural Strength Bottom:

$$M_{nbot} := \left[1 - \left(1 - \frac{I_{xxTee}}{y_{bot} \cdot Z_x}\right) \cdot \left(\frac{\lambda_f - \lambda_{pf}}{0.45 \cdot \sqrt{\frac{E}{F_y}}}\right)\right] \cdot F_y \cdot Z_x = 0.26\, MN \cdot m$$

$$M_{nbot} = 191.17 \cdot kip \cdot ft$$

Available Flexural Strength Bottom: $M_{pbot} := \Phi_f \cdot M_{nbot} = 191.17 \cdot kip \cdot ft$

Unity Check Bottom Fiber at Floorbeam: $\frac{P_{h1}}{P_r} = 0.24$ $\quad \frac{P_{h2}}{P_r} = 0.02$ $\quad \frac{M1_{URib}}{M_{pbot}} = 0.13$

$$DCR := \frac{P_{h1} + P_{h2}}{P_r} + \frac{8}{9}\left(\frac{M1_{URib}}{M_{pbot}}\right) \qquad DCR = 0.381$$

3.2. Check Combined Axial and Flexural Demands at Midspan:

Flexural Strength Top:

$$M_{ntop} := \left[1 - \left(1 - \frac{I_{xxTee}}{y_{top} \cdot Z_x}\right) \cdot \left(\frac{\lambda_f - \lambda_{pf}}{0.45 \cdot \sqrt{\frac{E}{F_y}}}\right)\right] \cdot F_y \cdot Z_x = 0.26\, MN \cdot m$$

$$M_{ntop} = 194.82 \cdot kip \cdot ft$$

Available Flexural Strength Top:

$$M_{ptop} := \Phi_f \cdot M_{ntop} = 194.82 \cdot kip \cdot ft$$

Unity Check Top Fiber at Midspan:

$$\frac{P_{h1}}{P_r} = 0.24 \qquad \frac{P_{h2}}{P_r} = 0.02 \qquad \frac{M2_{URib}}{M_{ptop}} = 0.16$$

$$DCR := \frac{P_{h1} + P_{h2}}{P_r} + \frac{8}{9}\left(\frac{M2_{URib}}{M_{ptop}}\right) \qquad DCR = 0.4$$

3.3. Check Shear Demand:

Shear Resistance Factor:

$$\Phi_v := 1.0$$

Allowable Shear Strength :

$$V_n := 0.58 F_y \cdot A_{Tee_shear} \qquad V_n = 215.92 \cdot kip$$

Available Shear Strength :

$$V_r := \Phi_v \cdot V_n = 0.96 \cdot MN \qquad V_r = 215.92 \cdot kip$$

Unity Check :

$$DCR := \frac{V_{URib}}{V_n} \qquad DCR = 0.09$$

American Bridge / FLUOR
A JOINT VENTURE

CONCRETE TRUCK LOADING ON TRANSITION SPAN DECK (SKYWAY)

PLATE STIFFENER FINITE ELEMENT ANALYSIS LOAD DISTRIBUTION AND DEFLECTION EVALUATION

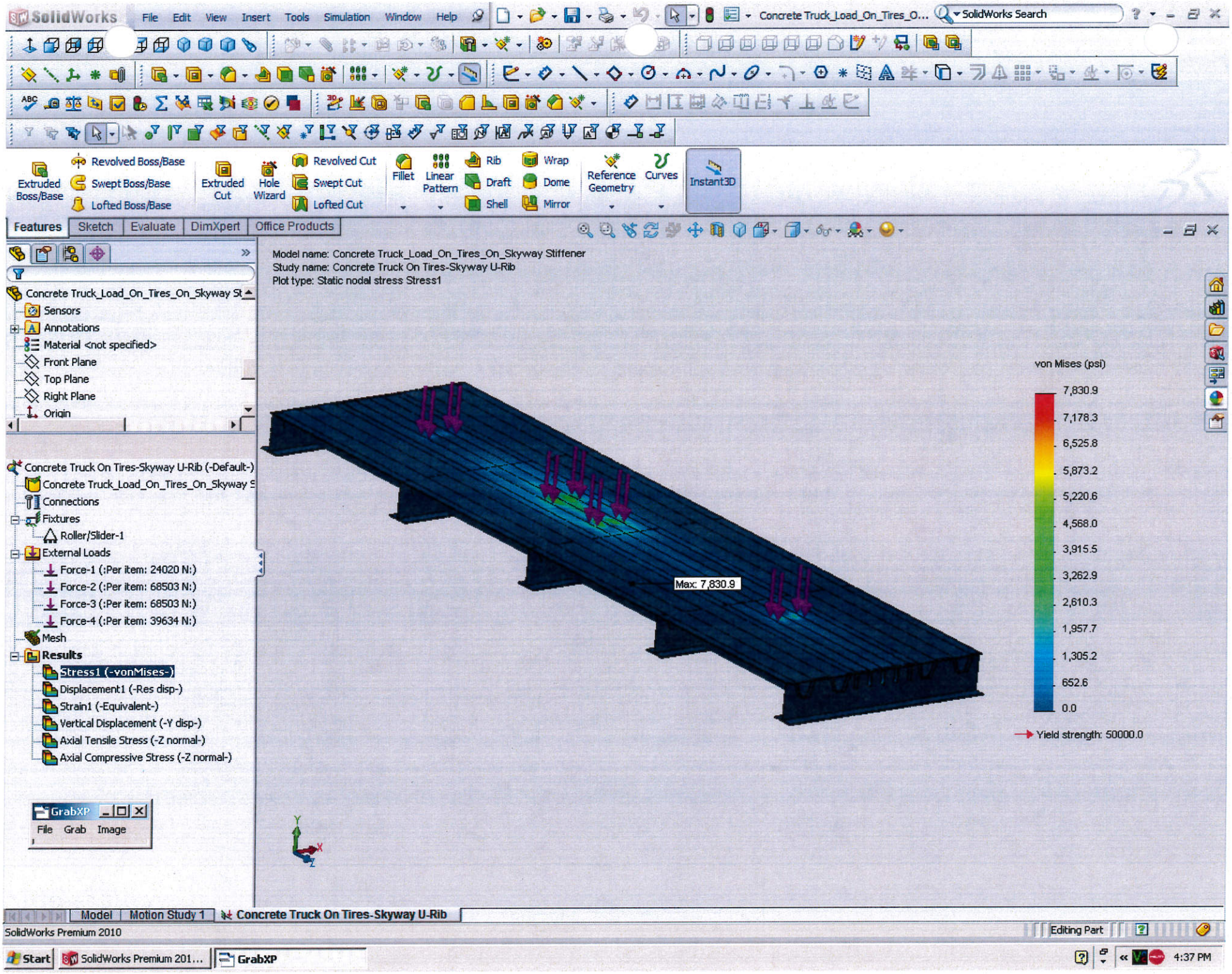
SolidWorks
File Edit View Insert Tools Simulation Window Help
Concrete Truck_Load_On_Tires_O...
SolidWorks Search
Extruded Boss/Base
Revolved Boss/Base
Swept Boss/Base
Lofted Boss/Base
Extruded Cut
Hole Wizard
Revolved Cut
Swept Cut
Lofted Cut
Fillet
Linear Pattern
Rib
Draft
Shell
Wrap
Dome
Mirror
Reference Geometry
Curves
Instant3D
Features
Sketch
Evaluate
DimXpert
Office Products
Model name: Concrete Truck_Load_On_Tires_On_Skyway Stiffener
Study name: Concrete Truck On Tires-Skyway U-Rib
Plot type: Static nodal stress Stress1
Concrete Truck_Load_On_Tires_On_Skyway St
Sensors
Annotations
Material <not specified>
Front Plane
Top Plane
Right Plane
Origin
Concrete Truck On Tires-Skyway U-Rib (-Default-)
Concrete Truck_Load_On_Tires_On_Skyway S
Connections
Fixtures
Roller/Slider-1
External Loads
Force-1 (:Per item: 24020 N:)
Force-2 (:Per item: 68503 N:)
Force-3 (:Per item: 68503 N:)
Force-4 (:Per item: 39634 N:)
Mesh
Results
Stress1 (-vonMises-)
Displacement1 (-Res disp-)
Strain1 (-Equivalent-)
Vertical Displacement (-Y disp-)
Axial Tensile Stress (-Z normal-)
Axial Compressive Stress (-Z normal-)
GrabXP
File Grab Image
Max: 7,830.9
von Mises (psi)
7,830.9
7,178.3
6,525.8
5,873.2
5,220.6
4,568.0
3,915.5
3,262.9
2,610.3
1,957.7
1,305.2
652.6
0.0
Yield strength: 50000.0
Model
Motion Study 1
Concrete Truck On Tires-Skyway U-Rib
SolidWorks Premium 2010
Editing Part
Start
SolidWorks Premium 201...
GrabXP
4:37 PM

Study name: Concrete Truck On Tires-Skyway U-Rib
Plot type: Static displacement Vertical Displacement

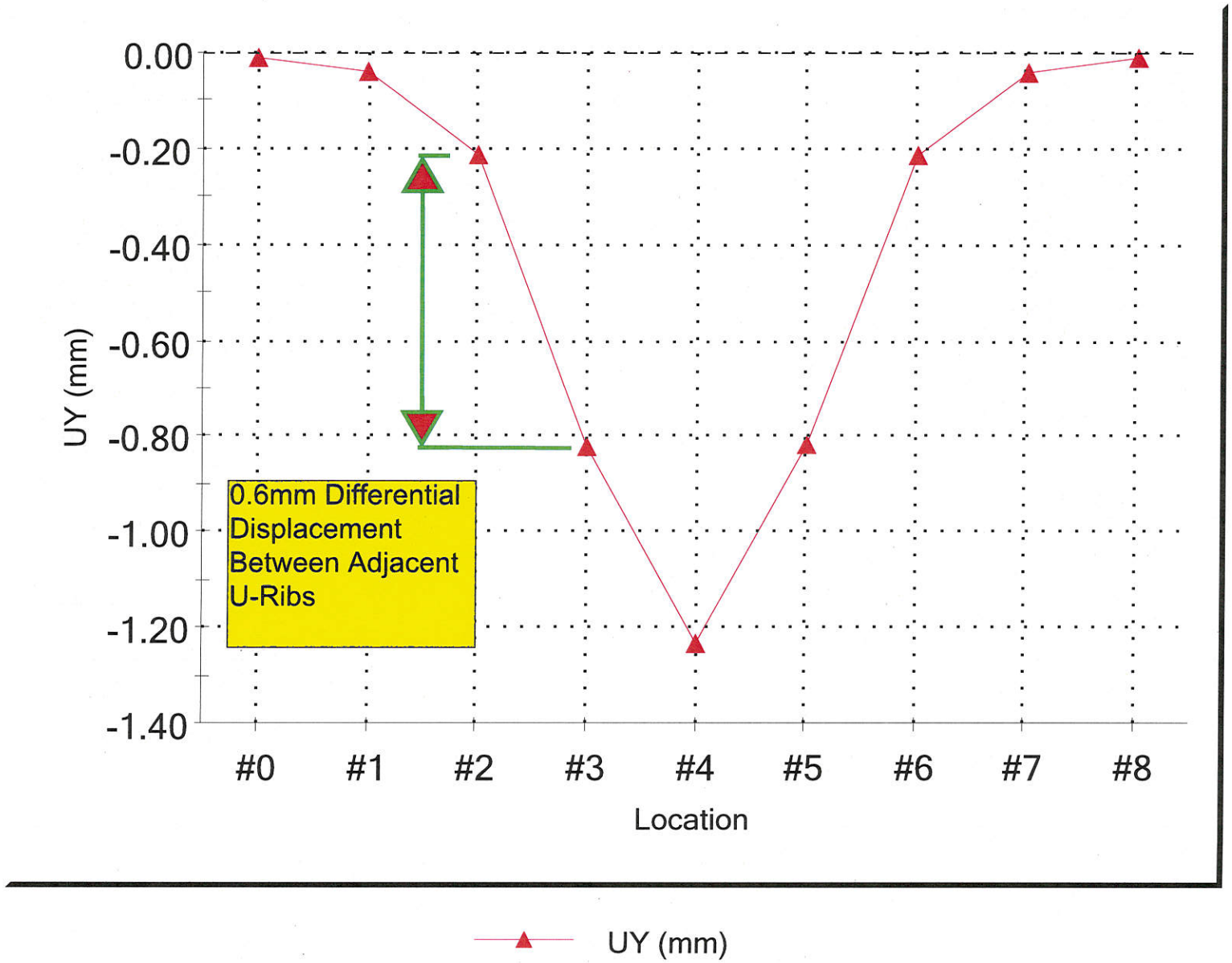

0, 0

Study name: Concrete Truck On Tires-Skyway U-Rib
Plot type: Static nodal stress Axial Tensile Stress

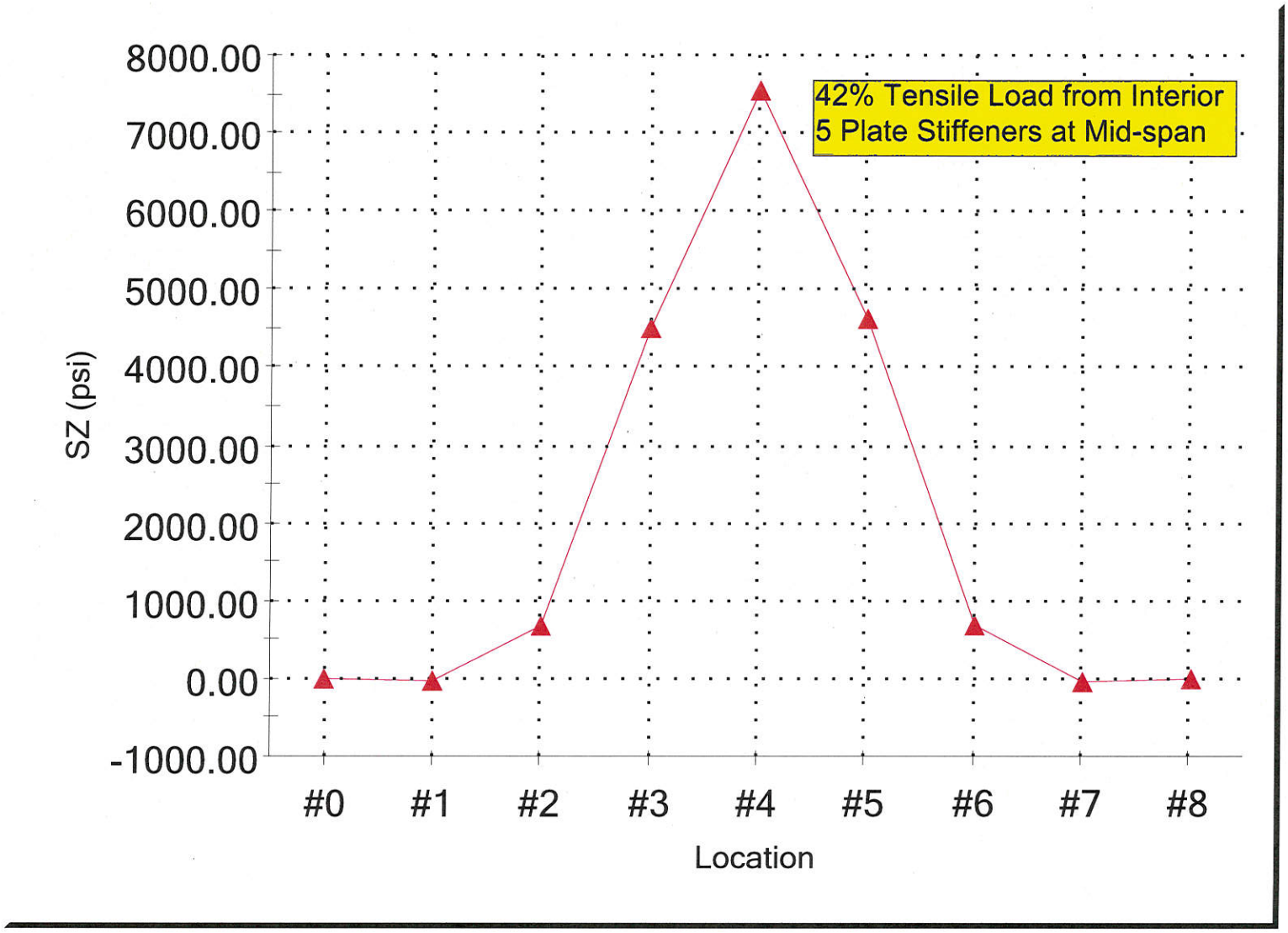

SZ (psi)

-2.55638, -1491.53

American Bridge / FLUOR
A JOINT VENTURE

375 Burma Road
Oakland, CA 94607 USA
Phone (510) 808-4600
Fax (510) 808-4601

SAN FRANCISCO OAKLAND BAY BRIDGE
EAST SPAN SEISMIC SAFETY PROJECT

SELF-ANCHORED SUSPENSION BRIDGE
(Superstructure and Tower)

Caltrans Contract No. 04-0120F4
Bridge No. 34-0006L/R
District 04 County SF Route 80 Kilometer Post 13.2 / 13.9

Submittal ABF-SUB-002757R00: PIER E2 BEARING AND SHEAR KEY ERECTION PLAN: 3" DIAMETER ANCHOR ROD STRESSING PLAN

Prepared By: American Bridge / Fluor Enterprises Inc., A Joint Venture
Date: October 15, 2012
Revision 0

TABLE OF CONTENTS

DESCRIPTION	PAGES
Pier E2 Bearing and Shear Key Stressing Plan Written Outline	1
Pier E2 Bearing and Shear Key Stressing Plan Drawings (DE353AF through DE353F)	6
Boltight TPT-4000-02-00 Tensioning System Technical Data	5
Tensioning Load and Jacking Pressure Calculations	1

REGISTERED PROFESSIONAL ENGINEER
KELVIN M. SMITH
No. C 62218
Exp. 9/30/13
CIVIL
STATE OF CALIFORNIA

American Bridge / FLUOR
A JOINT VENTURE

PROJECT: San Francisco Oakland Bay SAS Bridge Superstructure

SUBJECT: PIER E2 BEARING AND SHEAR KEY ERECTION PLAN: 3" DIAMETER ANCHOR ROD STRESSING PLAN

In accordance with Special Provisions Sections 10-1.47, "Spherical Bushing Bearing (PIER E2)" and 10-1.50 "Shear Key (PIER E2)", subsections "Working Drawings" and Department response to ABF-RFI-003046R00, American Bridge / Fluor Enterprises, Inc., A Joint Venture (ABFJV) provides herein the Pier E2 Bearing and Shear Key Erection Plan: 3" Diameter Anchor Rod Stressing Plan.

The intent of this submittal is to provide the plan for stressing of the 3" diameter anchor rods connecting each Bearing and Shear Key to Pier E2. Grouting of anchor rod ducts and Bearing and Shear Key baseplates has been submitted under separate cover in ABF-SUB-002756R00.

Section 1: General Overview

1.1. The Self Anchored Suspension Bridge (SAS) consists of four (4) Spherical Bushing Bearings, two (2) OBG Shear Keys, and two (2) Crossbeam Shear Keys.

1.2. Each Bearing consists of twenty four (24) anchor rods and each Shear Key consists of forty eight (48) anchor rods for a total of two hundred eighty eight (288) anchor rods to be stressed.

Section 2: Stressing Sequence and Details

Refer to sheets DE353AF – DE353F for stressing sequences and details.

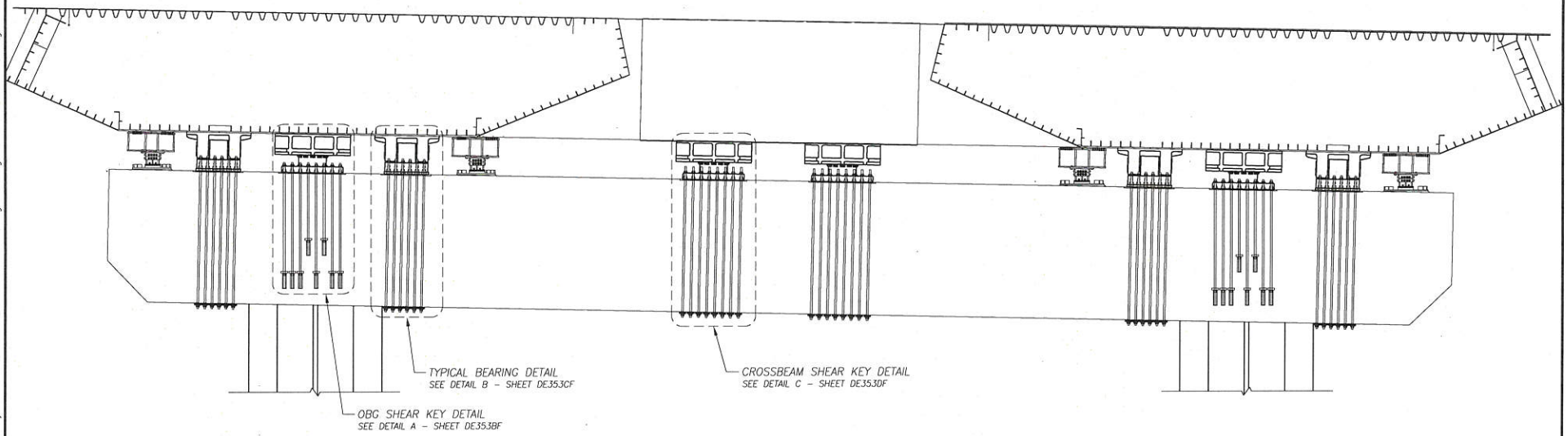

E2 BEARING AND SHEAR KEY ANCHOR ROD STRESSING

GENERAL ELEVATION AT PIER E2 (LOOKING EAST)

GENERAL NOTES:

1. STRESSING OF ANCHOR RODS WILL NOT BEGIN UNTIL ALL GROUT PLACEMENT (PER ABF-SUB-002756R00) HAS BEEN COMPLETED.
   1.1. BASEPLATE GROUT MUST ACHIEVE COMPRESSIVE STRENGTH OF 39MPa (5,600psi) BEFORE BEGINNING ANCHOR ROD STRESSING.
2. TEMPORARY TRUSS AND TEMPORARY E2 ACCESS NOT SHOWN FOR CLARITY.

STRESSING DATA:

1. TENSIONING DEVICE: BOLTIGHT HYDRAULIC TENSIONER – MODEL No. TPT-4000-02-00
   1.1. HYDRAULIC PRESSURE AREA = 20769mm² (32.19in²)
   1.2. MAXIMUM PRESSURE = 1500bar (21,750psi)
   1.3. MAXIMUM LOAD = 3,115kN (700kip)
2. ANCHOR RODS: 3"ø ASTM A354 GRADE BD
   2.1. STRESS AREA = 3852mm² (5.97in²)
   2.2. TENSILE STRESS, fu = 965MPa (140ksi)
3. ALL ANCHOR RODS WILL BE TENSIONED TO MAXIMUM ALLOWABLE LOAD (.75fu)
   3.1. SEE ATTACHED CALCULATION SHEET AND HYDRAULIC TENSIONER DATA SHEETS FOR DETAILS
   3.2. TENSIONING LOAD = 2789kN (627kip)
   3.3. TENSIONING PRESSURE = 19,480psi (TO BE READ FROM GAUGE ON BOLTIGHT EQUIPMENT)

REGISTERED PROFESSIONAL ENGINEER
KEVIN M. SMITH
No. C 62218
Exp. 9/30/13
CIVIL
STATE OF CALIFORNIA

REV	DATE	DWG BY	DWG CHK	DSGN BY	DSGN CHK	DESCRIPTION
6						
5						
4						
3						
2						
1						

FOR APPROVAL

STATE OF CALIFORNIA
DEPARTMENT OF TRANSPORTATION
CONTRACT NO. 04-0120F4
BRIDGE NO. 34-0006L/R

DISTRICT	COUNTY	ROUTE	KILOMETER POST
04	SF	80	13.2 / 13.9

SAN FRANCISCO OAKLAND BAY BRIDGE
EAST SPAN SEISMIC SAFETY PROJECT
SELF ANCHORED SUSPENSION BRIDGE
(SUPERSTRUCTURE AND TOWER)

E2 BEARING AND SHEAR KEY
ERECTION PLAN: ANCHOR ROD STRESSING
GENERAL ELEVATION AND INFORMATION

American Bridge / FLUOR
A JOINT VENTURE

Design By:	Z. LAURIA	Date:	9/28/12
Design Chk:	K. SMITH	Date:	10/15/12
Drawn By:	Z. LAURIA	Date:	10/2/12
Drawing Chk:	K. SMITH	Date:	10/15/12
In Charge Of:	R. KICK		
Job No.	660110	Sheet No.	DE353AF
Scale:	NTS	Revision:	0

Oct 15, 2012 – 4:40pm Y:\D300 E2 and W2\Submittals\Submittal 002757R00 – E2 Bearing and Shear Key Erection Plan – Anchor Rod Stressing\Drawings\DWG\DE353A-R00.dwg

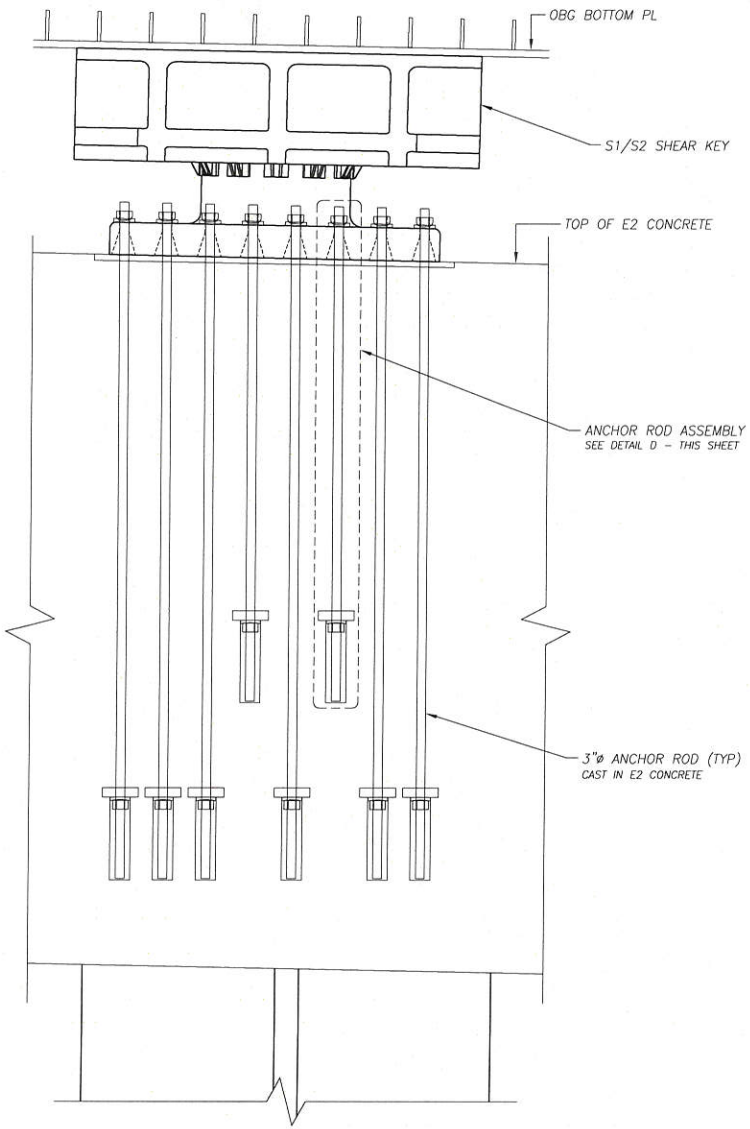

DETAIL A – OBG SHEAR KEY
FROM SHEET DE353AF
(ANCHOR ROD DUCTS NOT SHOWN FOR CLARITY)

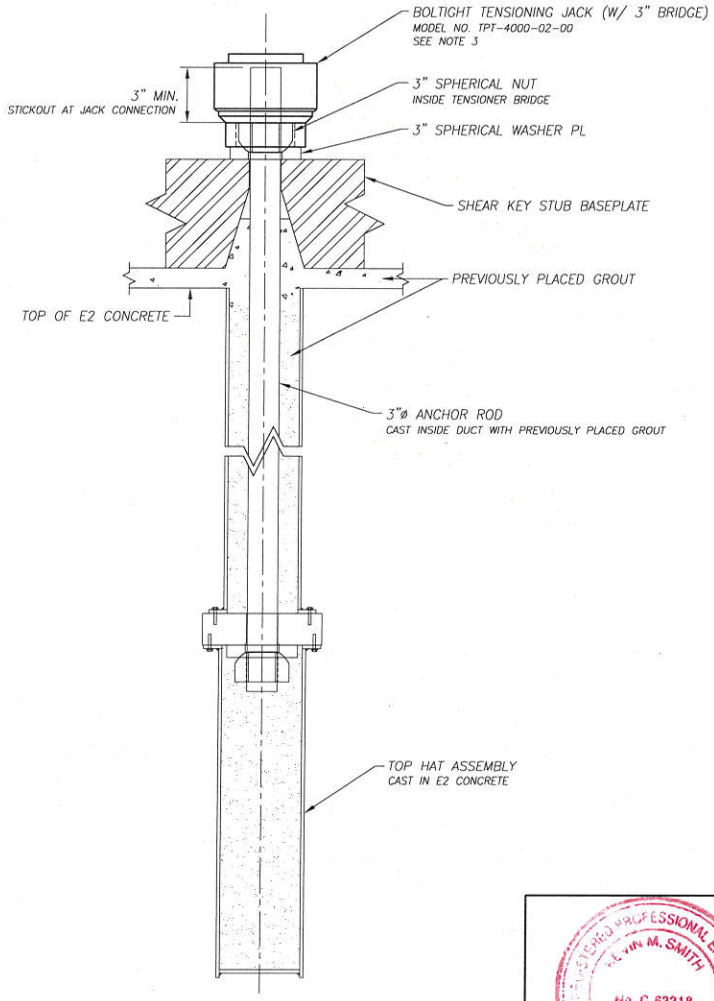

DETAIL D – OBG SHEAR KEY ANCHOR ROD ASSEMBLY

NOTES:

1. SEE GENERAL NOTES ON SHEET DE353AF.
2. SEE PRESTRESSING DATA ON SHEET DE353AF.
3. ALL OBG SHEAR KEY ANCHOR RODS WILL BE STRESSED FROM TOP OF ANCHOR ROD.

FOR APPROVAL

STATE OF CALIFORNIA
DEPARTMENT OF TRANSPORTATION
CONTRACT NO. 04-0120F4
BRIDGE NO. 34-0006L/R

DISTRICT	COUNTY	ROUTE	KILOMETER POST
04	SF	80	13.2 / 13.9

SAN FRANCISCO OAKLAND BAY BRIDGE
EAST SPAN SEISMIC SAFETY PROJECT
SELF ANCHORED SUSPENSION BRIDGE
(SUPERSTRUCTURE AND TOWER)

E2 BEARING AND SHEAR KEY
ERECTION PLAN: ANCHOR ROD STRESSING
OBG SHEAR KEY ELEVATION

American Bridge / FLUOR
A JOINT VENTURE

REGISTERED PROFESSIONAL ENGINEER
KEVIN M. SMITH
No. C 62218
Exp. 9/30/13
CIVIL
STATE OF CALIFORNIA

Design By:	Z. LAURIA	Date:	9/28/12
Design Chk:	K. SMITH	Date:	10/15/12
Drawn By:	Z. LAURIA	Date:	10/2/12
Drawing Chk:	K. SMITH	Date:	10/15/12
In Charge Of:	R. KICK		
Job No.	660110	Sheet No.	DE353BF
Scale:	NTS	Revision:	0

REV	DATE	DWG BY	DWG CHK	DSGN BY	DSGN CHK	DESCRIPTION
6						
5						
4						
3						
2						
1						

Oct 15, 2012 – 4:29pm Y:\D300 E2 and W2\Submittals\Submittal 00275\R00 – E2 Bearing and Shear Key Erection Plan – Anchor Rod Stressing\Drawings\DWG\DE353A-R00.dwg

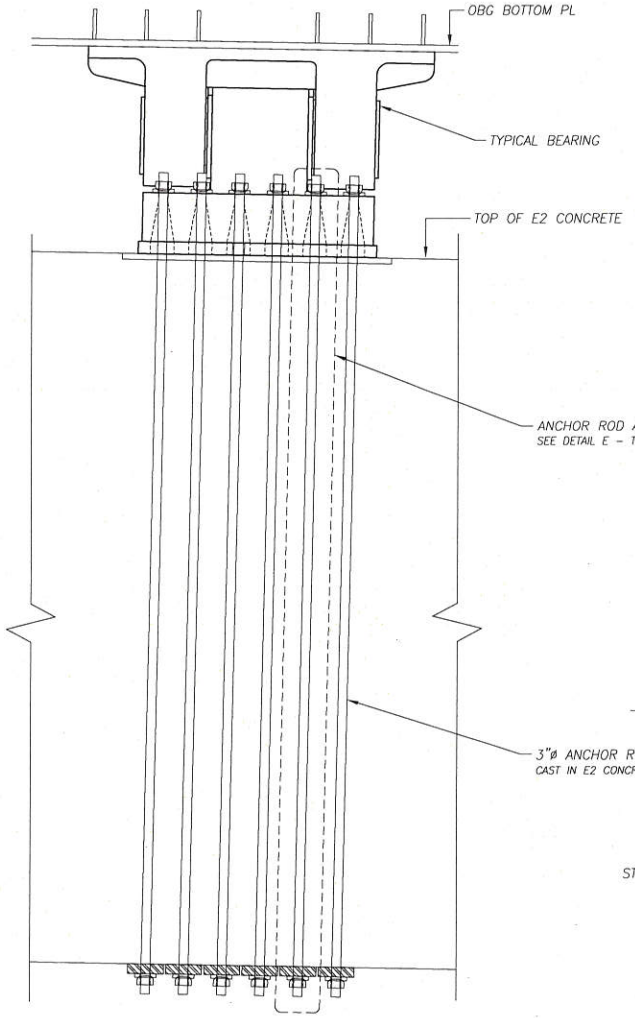

DETAIL B – TYPICAL BEARING
FROM SHEET DE353AF
(ANCHOR ROD DUCTS NOT SHOWN FOR CLARITY)

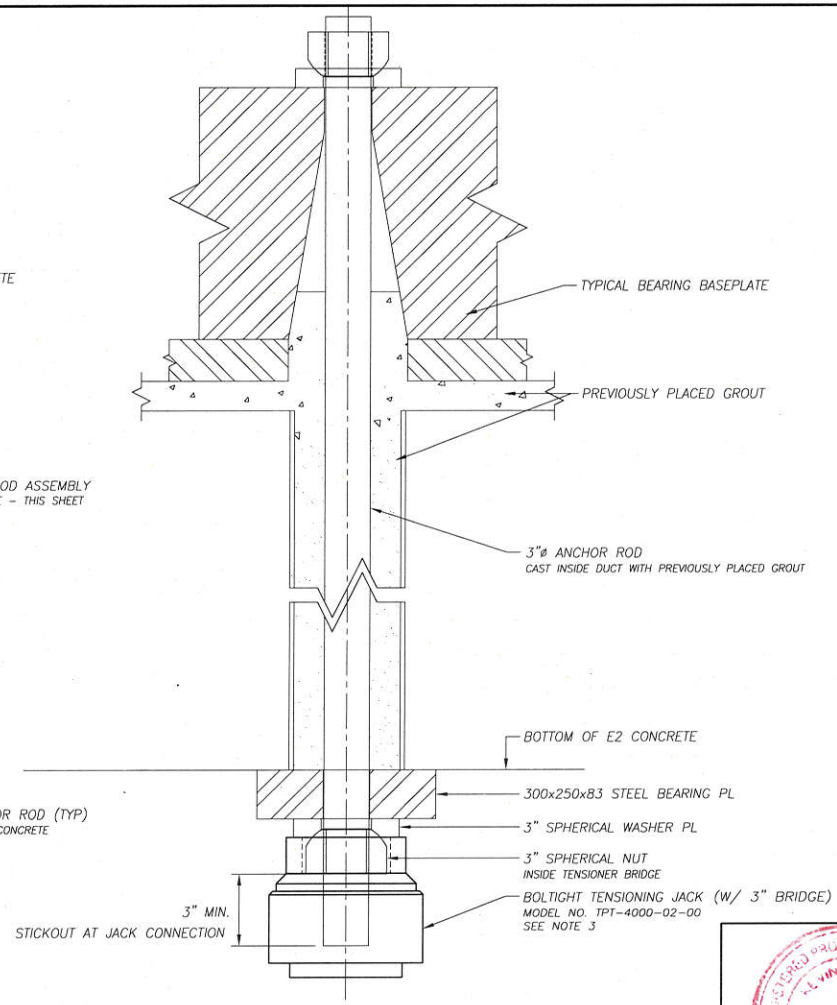

DETAIL E – TYPICAL BEARING ANCHOR ROD ASSEMBLY

NOTES:

1. SEE GENERAL NOTES ON SHEET DE353AF.
2. SEE PRESTRESSING DATA ON SHEET DE353AF.
3. ALL TYPICAL BEARING ANCHOR RODS WILL BE STRESSED FROM BOTTOM OF ANCHOR ROD.

FOR APPROVAL

STATE OF CALIFORNIA
DEPARTMENT OF TRANSPORTATION
CONTRACT NO. 04-0120F4
BRIDGE NO. 34-0006L/R

DISTRICT	COUNTY	ROUTE	KILOMETER POST
04	SF	80	13.2 / 13.9

SAN FRANCISCO OAKLAND BAY BRIDGE
EAST SPAN SEISMIC SAFETY PROJECT
SELF ANCHORED SUSPENSION BRIDGE
(SUPERSTRUCTURE AND TOWER)

E2 BEARING AND SHEAR KEY
ERECTION PLAN: ANCHOR ROD STRESSING
TYPICAL BEARING ELEVATION

American Bridge / FLUOR
A JOINT VENTURE

REGISTERED PROFESSIONAL ENGINEER
KELVIN M. SMITH
No. C 62218
Exp. 9/30/13
CIVIL
STATE OF CALIFORNIA

Design By:	Z. LAURIA	Date:	9/28/12
Design Chk:	K. SMITH	Date:	10/15/12
Drawn By:	Z. LAURIA	Date:	10/2/12
Drawing Chk:	K. SMITH	Date:	10/15/12
In Charge Of:	R. KICK		
Job No.	660110	Sheet No.	DE353CF
Scale:	NTS	Revision:	0

REV	DATE	DWG BY	DWG CHK	DSGN BY	DSGN CHK	DESCRIPTION
6						
5						
4						
3						
2						
1						

Oct 15, 2012 – 4:30pm Y:\300 E2 and W2\Submittals\Submittal 002757R00 – E2 Bearing and Shear Key Erection Plan – Anchor Rod Stressing\Drawings\DWG\DE353A-R00.dwg

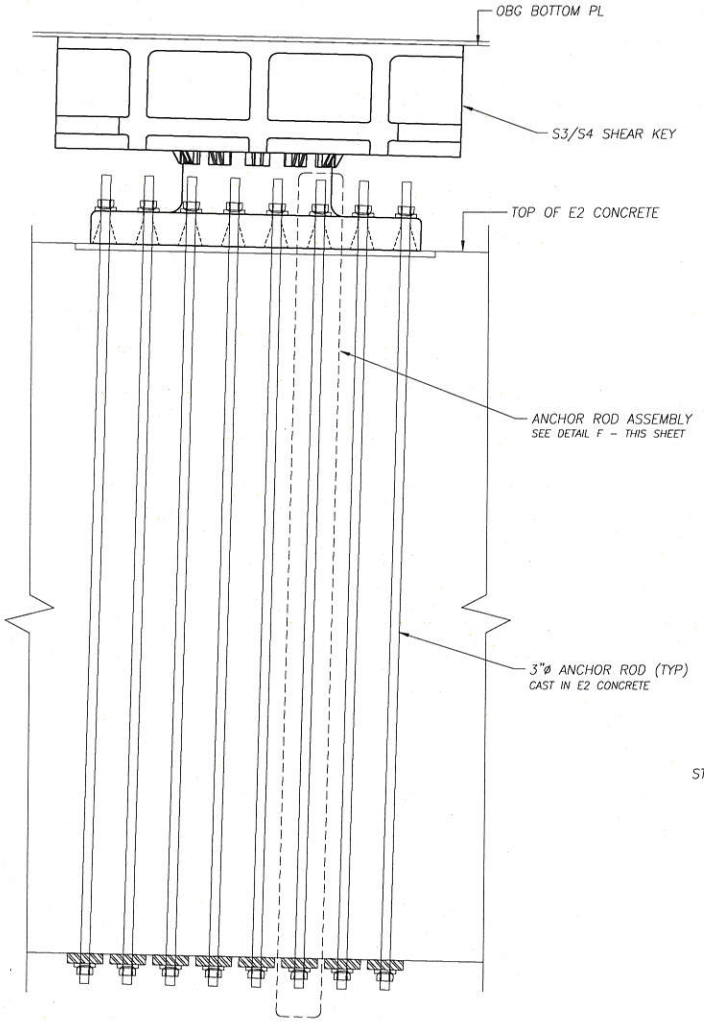

DETAIL C – CROSSBEAM SHEAR KEY
FROM SHEET DE353AF
(ANCHOR ROD DUCTS NOT SHOWN FOR CLARITY)

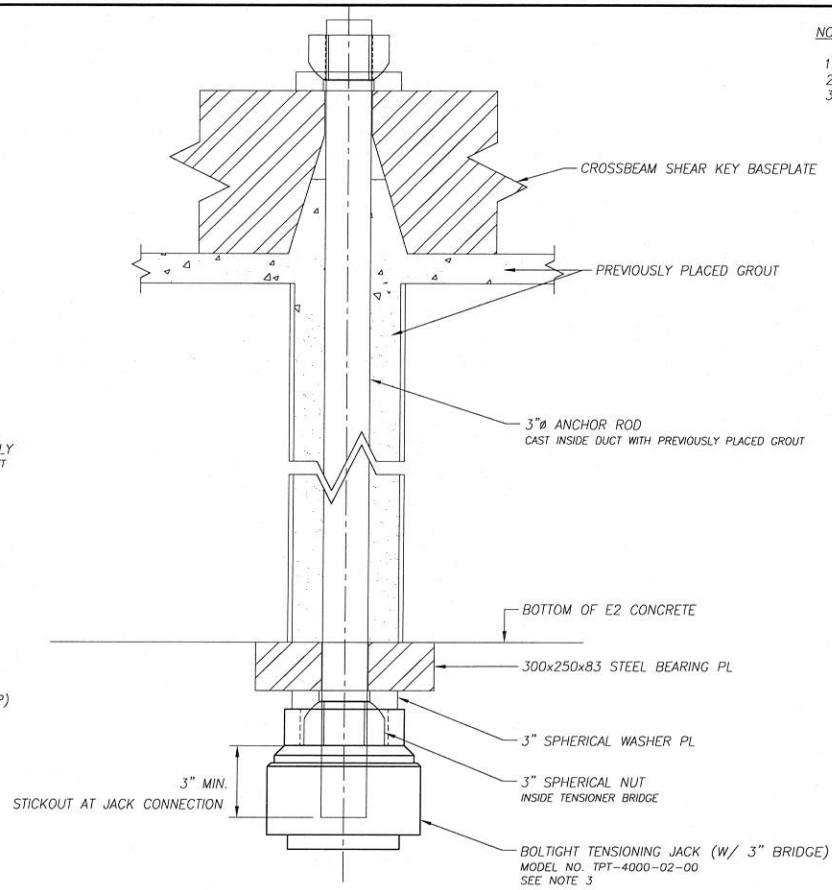

DETAIL F – CROSSBEAM SHEAR KEY ANCHOR ROD ASSEMBLY

NOTES:

1. SEE GENERAL NOTES ON SHEET DE353AF.
2. SEE PRESTRESSING DATA ON SHEET DE353AF.
3. ALL CROSSBEAM SHEAR KEY ANCHOR RODS WILL BE STRESSED FROM BOTTOM OF ANCHOR ROD.

FOR APPROVAL

STATE OF CALIFORNIA
DEPARTMENT OF TRANSPORTATION
CONTRACT NO. 04-0120F4
BRIDGE NO. 34-0006L/R

DISTRICT	COUNTY	ROUTE	KILOMETER POST
04	SF	80	13.2 / 13.9

SAN FRANCISCO OAKLAND BAY BRIDGE
EAST SPAN SEISMIC SAFETY PROJECT
SELF ANCHORED SUSPENSION BRIDGE
(SUPERSTRUCTURE AND TOWER)

E2 BEARING AND SHEAR KEY
ERECTION PLAN: ANCHOR ROD STRESSING
CROSSBEAM SHEAR KEY ELEVATION

American Bridge / FLUOR
A JOINT VENTURE

REGISTERED PROFESSIONAL ENGINEER
KELVIN M. SMITH
No. C 62218
Exp. 9/30/13
CIVIL
STATE OF CALIFORNIA

REV	DATE	DWG BY	DWG CHK	DSGN BY	DSGN CHK	DESCRIPTION
6						
5						
4						
3						
2						
1						

Design By:	Z. LAURIA	Date:	9/28/12
Design Chk:	K. SMITH	Date:	10/15/12
Drawn By:	Z. LAURIA	Date:	10//12
Drawing Chk:	K. SMITH	Date:	10/15/12
In Charge Of:	R. KICK		
Job No.	660110	Sheet No.	DE353DF
Scale:	NTS	Revision:	0

Oct 15, 2012 – 4:30pm Y:D300 E2 and W2DSubmittalsDSubmittal 002757R00 – E2 Bearing and Shear Key Erection Plan – Anchor Rod StressingDDrawingsDDWGDDE353A-R00.dwg

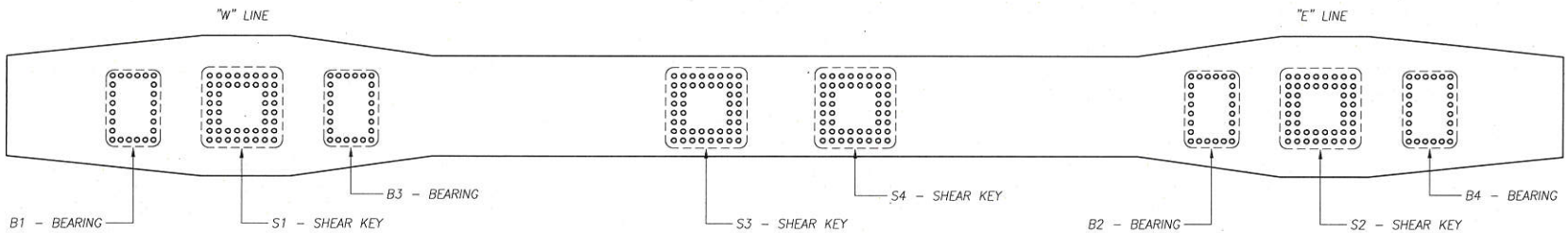

E2 BEARING AND SHEAR KEY ANCHOR ROD LAYOUT

PIER E2 PLAN AT TOP OF CONCRETE

NORTH (SEE NOTE 4)

BEARING AND SHEAR KEY ANCHOR ROD I.D. KEY

B1–E8

- B1 – BEARING/SHEAR KEY PIECE MARK
- E – ROD GRID LETTER
- 8 – ROD GRID NUMBER

GRID LETTER →

GRID NUMBER ↓

	A	B	C	D	E	F
1	○	○	○	○	○	○
2	○					○
3	○					○
4	○					○
5	○					○
6	○					○
7	○					○
8	○	○	○	○	○	○

BEARING ROD I.D. GRID
PLAN VIEW (LOOKING DOWN)

GRID LETTER →

GRID NUMBER ↓

	A	B	C	D	E	F	G	H
1	○	○	○	○	○	○	○	○
2	○	○	○	○	○	○	○	○
3	○	○					○	○
4	○	○					○	○
5	○	○					○	○
6	○	○					○	○
7	○	○	○	○	○	○	○	○
8	○	○	○	○	○	○	○	○

SHEAR KEY ROD I.D. GRID
PLAN VIEW (LOOKING DOWN)

NOTES:

1. SEE GENERAL NOTES ON SHEET DE353AF.
2. FOR STRESSING SEQUENCE AND PROCEDURE SEE SHEET DE353F.
3. ANCHOR ROD I.D. LOCATIONS APPLY TO ALL RODS FOR ALL BEARINGS AND SHEAR KEYS.
4. ORIENTATION OF ANCHOR ROD I.D. KEY, AND CORRESPONDING ROD I.D. IS CONSISTENT FOR ALL BEARING AND SHEAR KEY ANCHOR ROD PATTERNS.

FOR APPROVAL

REGISTERED PROFESSIONAL ENGINEER KEVIN M. SMITH No. C 62218 Exp. 9/30/13 CIVIL STATE OF CALIFORNIA

REV	DATE	DWG BY	DWG CHK	DSGN BY	DSGN CHK	DESCRIPTION
6						
5						
4						
3						
2						
1						

STATE OF CALIFORNIA
DEPARTMENT OF TRANSPORTATION
CONTRACT NO. 04-0120F4
BRIDGE NO. 34-0006L/R

DISTRICT	COUNTY	ROUTE	KILOMETER POST
04	SF	80	13.2 / 13.9

SAN FRANCISCO OAKLAND BAY BRIDGE
EAST SPAN SEISMIC SAFETY PROJECT
SELF ANCHORED SUSPENSION BRIDGE
(SUPERSTRUCTURE AND TOWER)

E2 BEARING AND SHEAR KEY
ERECTION PLAN: ANCHOR ROD STRESSING
ANCHOR ROD I.D. KEY DETAILS

American Bridge / FLUOR
A JOINT VENTURE

Design By:	Z. LAURIA	Date:	9/28/12
Design Chk:	K. SMITH	Date:	10/15/12
Drawn By:	Z. LAURIA	Date:	10/2/12
Drawing Chk:	K. SMITH	Date:	10/15/12
In Charge Of:	R. KICK		
Job No.	660110	Sheet No.	DE353EF
Scale:	NTS	Revision:	0

Oct 15, 2012 – 4:31pm Y:\0300 E2 and W2\Submittals\Submittal 00275\R00 – E2 Bearing and Shear Key Erection Plan – Anchor Rod Stressing\Drawings\DWG\DE353A-R00.dwg

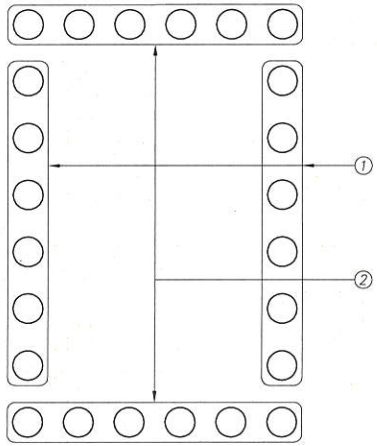

TYPICAL BEARING ANCHOR ROD STRESSING SEQUENCE

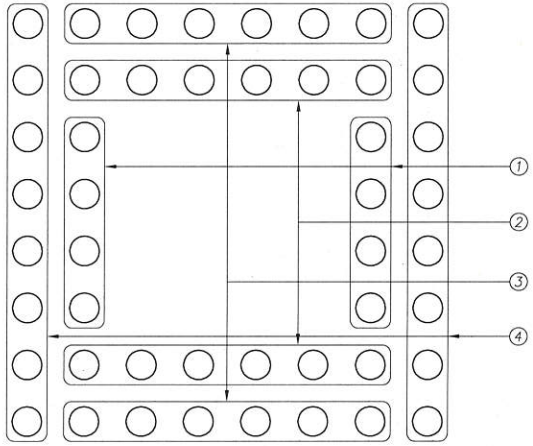

TYPICAL SHEAR KEY ANCHOR ROD STRESSING SEQUENCE

STRESSING PROCEDURE:

1. ATTACH TENSIONING JACKS AND HYDRAULIC CONNECTIONS AT ALL RODS TO BE TENSIONED AS SHOWN FOR STEP 1.
   1.1. FOR JACK ATTACHMENT ARRANGEMENTS AND STRESSING LOCATIONS SEE SHEETS DE353BF – DE353DF.
2. ENGAGE PUMP AND INCREASE PRESSURE TO "TENSIONING PRESSURE" AS SPECIFIED ON SHEET DE353AF.
   2.1. ENSURE ALL JACKS ARE ENGAGED AND EXTENDING AT ALL RODS BEING TENSIONED.
3. ONCE TARGET PRESSURE HAS BEEN ACHIEVED, STOP/DISENGAGE PUMP AND SEAT NUTS OF ALL TENSIONED RODS USING GEARBOX IN TENSIONER BRIDGE.
   3.1. LOG OBSERVED PRESSURE FOR EACH ROD GROUP TENSIONED ACCORDING TO "ANCHOR ROD I.D. KEY" ON SHEET DE353EF.
4. SLOWLY RELEASE PRESSURE UNTIL TENSIONER IS FULLY RETRACTED.
5. REMOVE JACKS FROM TENSIONED RODS.
6. REPEAT STEPS 1 – 5 FOR ALL RODS IN EACH ANCHOR ROD PATTERN ACCORDING TO SEQUENCE SHOWN.

STRESSING SEQUENCE NOTES:

1. TYPICAL SEQUENCES SHOWN FOR BEARINGS AND SHEAR KEYS WILL BE APPLIED TO ALL ANCHOR ROD PATTERNS FOR EACH TYPE.
2. ALL RODS SHOWN FOR EACH SEQUENCE STEP WILL BE TENSIONED SIMULTANEOUSLY WITHIN THAT STEP USING LINKED HYDRAULIC CONNECTIONS.
3. FOR STRESSING DATA SEE SHEET DE353AF.

REGISTERED PROFESSIONAL ENGINEER
KEVIN M. SMITH
No. C 62218
Exp. 9/30/13
CIVIL
STATE OF CALIFORNIA

REV	DATE	DWG BY	DWG CHK	DSGN BY	DSGN CHK	DESCRIPTION
6						
5						
4						
3						
2						
1						

FOR APPROVAL

STATE OF CALIFORNIA
DEPARTMENT OF TRANSPORTATION
CONTRACT NO. 04-0120F4
BRIDGE NO. 34-0006L/R

DISTRICT	COUNTY	ROUTE	KILOMETER POST
04	SF	80	13.2 / 13.9

SAN FRANCISCO OAKLAND BAY BRIDGE
EAST SPAN SEISMIC SAFETY PROJECT
SELF ANCHORED SUSPENSION BRIDGE
(SUPERSTRUCTURE AND TOWER)

E2 BEARING AND SHEAR KEY
ERECTION PLAN: ANCHOR ROD STRESSING
STRESSING SEQUENCE AND PROCEDURE

American Bridge / FLUOR
A JOINT VENTURE

Design By:	Z. LAURIA	Date:	9/28/12
Design Chk:	K. SMITH	Date:	10/15/12
Drawn By:	Z. LAURIA	Date:	10/2/12
Drawing Chk:	K. SMITH	Date:	10/15/12
In Charge Of:	R. KICK		

Job No.	Sheet No.
660110	DE353F
Scale: NTS	Revision: 0

Oct 15, 2012 – 4:32pm Y:\D300 E2 and W2\Submittals\Submittal 002757R00 – E2 Bearing and Shear Key Erection Plan – Anchor Rod Stressing\Drawings\DWG\DE353A-R00.dwg

THIS DRAWING AND THE DESIGN IS THE PROPERTY OF BOLTIGHT LTD AND MUST NOT BE COPIED OR DISCLOSED TO ANY THIRD PARTY WITHOUT THE WRITTEN CONSENT OF THE COMPANY

ALL DIMS MM U.S.O.

DO NOT SCALE

700 KIP TENSIONER & 4" BRIDGE

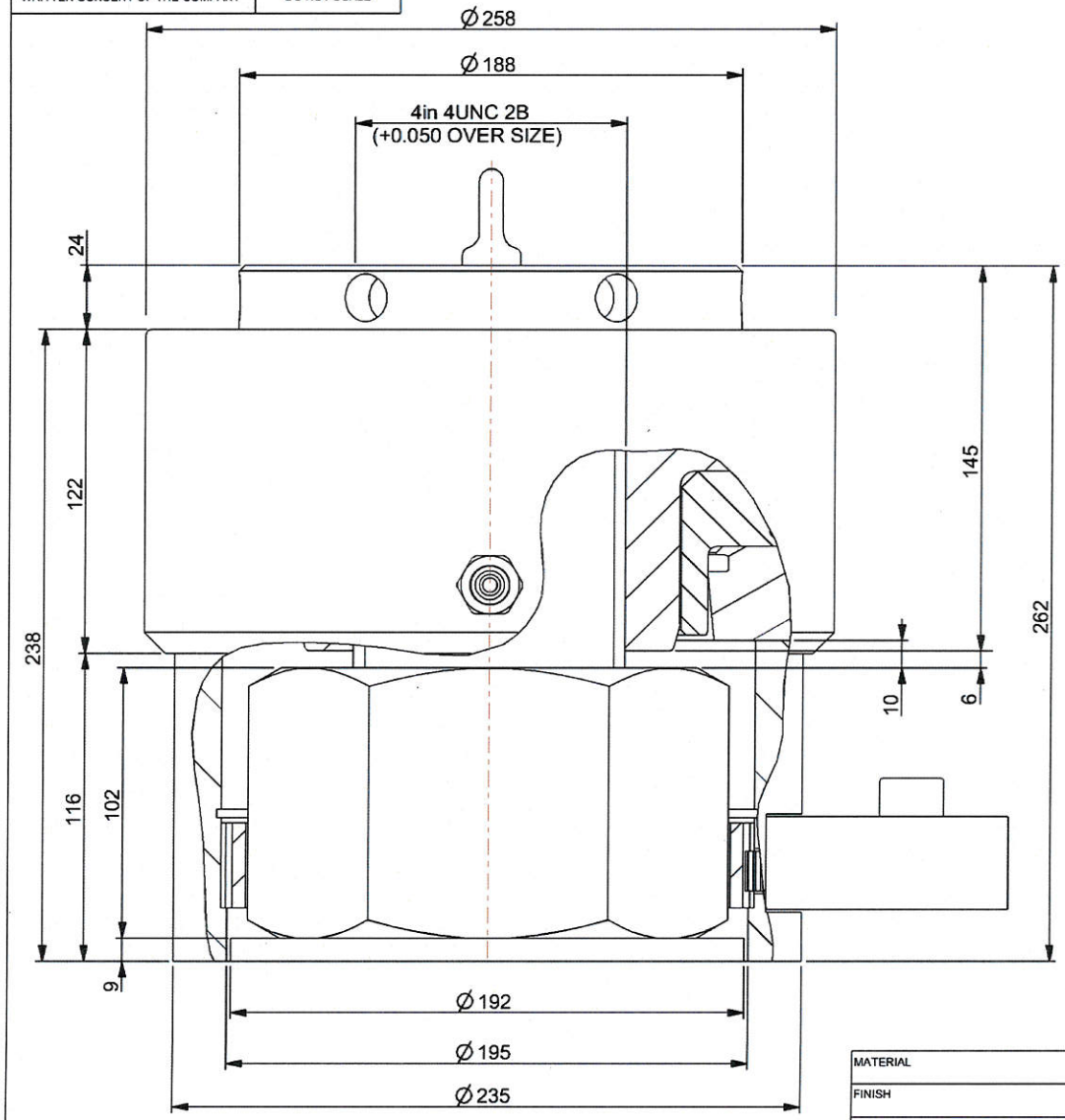

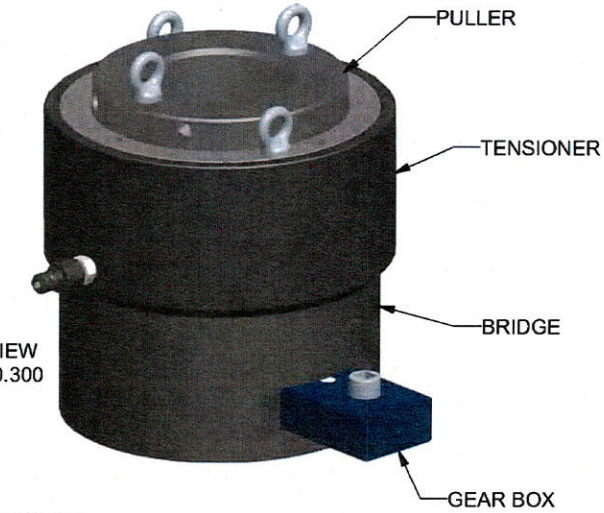

GENERAL VIEW
SCALE 0.300

TOOL FEATURES:
- -MAXIMUM STROKE INDICATOR
- -LONG LIFE COMPOSITE SEALS
- -ANTI OVERSTROKE MECHANISM
- -LOW MAINTENANCE GEAR BOX FOR NUT ROTATION
- -SPRING PISTON RETURN

SPECIFICATION				
MAX PRESSURE	1500	bar	21750	psi
HYDRAULIC PRESSURE AREA	20769	mm2	32.19	in2
MAX LOAD	3115	kN	700	kibf
MAXIMUM STROKE	10	mm	0.394	in
BRIDGE WEIGHT 4in	14.9	kg	32.9	lb
BRIDGE WEIGHT 3-1/2in	13.8	kg	30.4	lb
BRIDGE WEIGHT 3in	13.8	kg	30.4	lb
PULLER WEIGHT 4in	16.6	kg	36.6	lb
PULLER WEIGHT 3-1/2in	18.5	kg	40.8	lb
PULLER WEIGHT 3in	20	kg	44.1	lb
HYD.CYLINDER WEIGHT	24.7	kg	54.5	lb

NUT DIMENSIONS:
6.125" ACROSS FLATS
7.073" ACROSS CORNERS
4.014" THICK

WASHER DIMENSIONS:
7.532" OUTSIDE DIMENSION
0.34" THICK

MATERIAL						
FINISH						
SURFACE FINISH	1.6	C	10043	DW	DM	280510
LIMITS U.S.O.	±0.25 ± 0.25 °	B	10041	DW	DM	270510
SIZE A3	SCALE 0.600	A	-	UL		
		REV	CNN	DRAWN	CHECKED	DATE

BOLTIGHT

TITLE: SPRING RETURN COMBINED TENSIONER 1/3

DRAWING NO. TPT-4000-02-00

ISSUE C

Copyright Boltight Ltd 2010

Copyright Boltight Ltd 2010

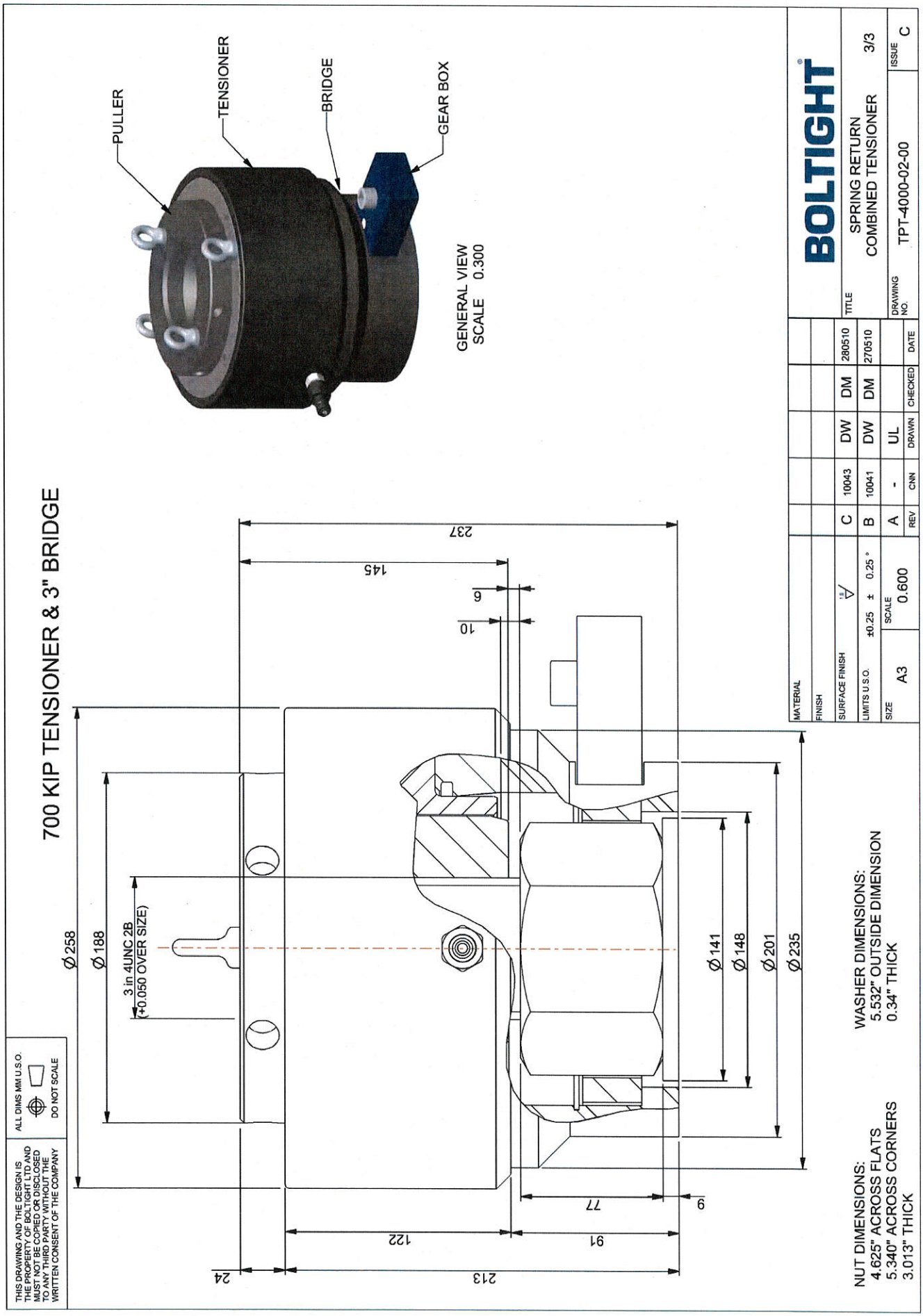

Copyright Boltight Ltd 2010

Tool Specification TPT-4000-02-00
700 KIP TENSIONER & 3" BRIDGE

Hydraulic Pressure Area	20769 mm^2	32.19 in^2
Maximum Working Pressure *	1500 bar	21750 psi
Maximum Load*	3115 kN	700 klbf
Maximum Stroke	10 mm	0.394 in
Footprint Area	14528mm^2	22.52 in^2
Maximum Footprint Stress	215 MPa	31180 psi
Approx Cylinder Weight	24.7kg	54.5 lb
Approx Puller Weight	20.0 kg	44.1 lb
Approx Bridge Weight	13.8 kg	30.4 lb

* **Warning**: Max Pressure and Max Load should be verified by a competent engineer relative to the stud size and material being used.

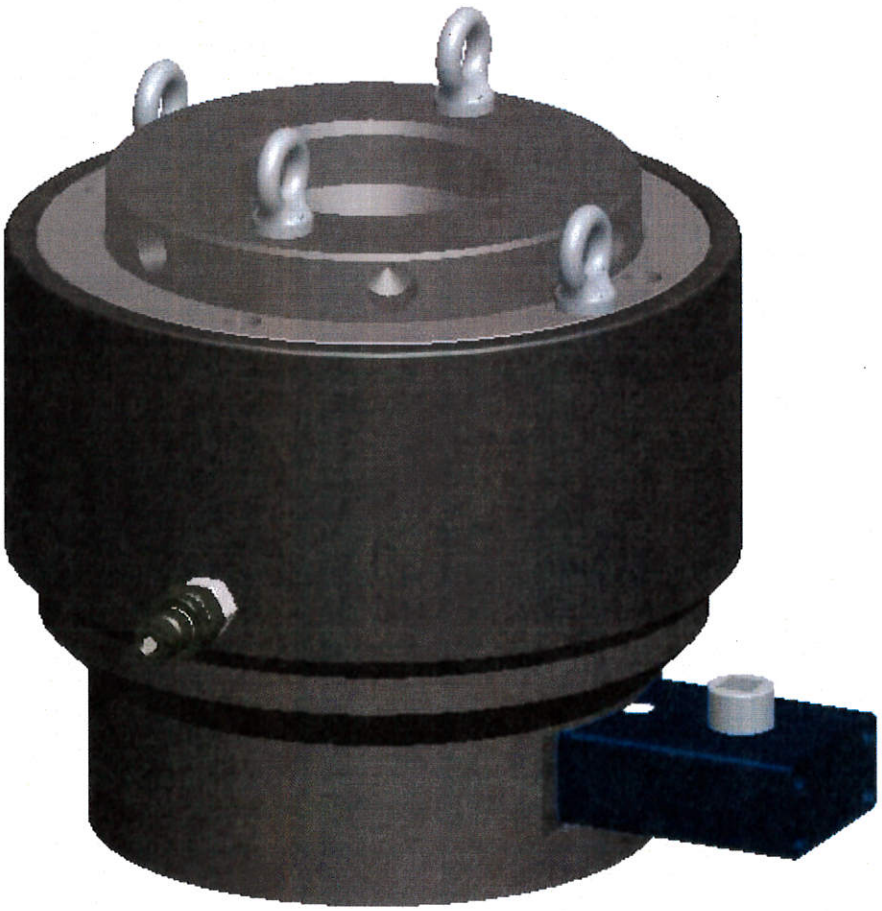

Copyright Boltight Ltd 2010

OIL PRESSURE CALCULATION AND GRAPHS

The formula used to calculate the Oil Pressure to be used with a bolt tensioning tool are given below along with definitions of the terms used :-

Bolt Load
Residual Bolt Load required when the tensioning operation is complete

Tensioning Force
The load that will be applied by the bolt tensioner during the tensioning operation

Load Loss Allowance
The ratio of ***Tensioning Force*** to ***Bolt Load***

$$\textbf{\textit{Load Loss Allowance}} = \frac{\textbf{\textit{Tensioning Force}}}{\textbf{\textit{Bolt Load}}} = 1.01 + \frac{\text{Bolt Diameter}}{\text{Grip Length}}$$

If the ***Load Loss Allowance*** calculates to less than 1.10 then use 1.10.

Tensioning Force = Bolt Load x Load Loss Allowance

Always check that the tensioning force will not exceed 90% of the yield strength of the bolt material. If it does, the grip length of the bolt must be increased. Contact Boltight Ltd. for advice on this.

$$\textbf{\textit{Oil Pressure}}\ (\text{bar}) = \frac{\textbf{10 x \textit{Tensioning Force}}\ (\text{Newtons})}{\textbf{\textit{Tool Pressure Area}}\ (\text{mm}^2)}$$

Oil pressure graphs are provided for each bolt size.

One graph shows the theoretical tensioning force developed by the tool against the oil pressure applied.

The next graphs show the initial bolt stress developed by the tool against the oil pressure applied for each bolt size. This graph is provided to assist with the check that the tensioning force does not exceed 95% of the yield strength of the bolt material.

Users who require highly accurate residual bolt stresses should perform a bolt extension measurement before and after tensioning. In this way residual bolt stresses can be calculated from the actual bolt extensions measured.

Copyright Boltight Ltd 2010

Bolt Tensioning Tool TPT-4000-02-00

Oil Pressure vs Theoretical Tensioning Force

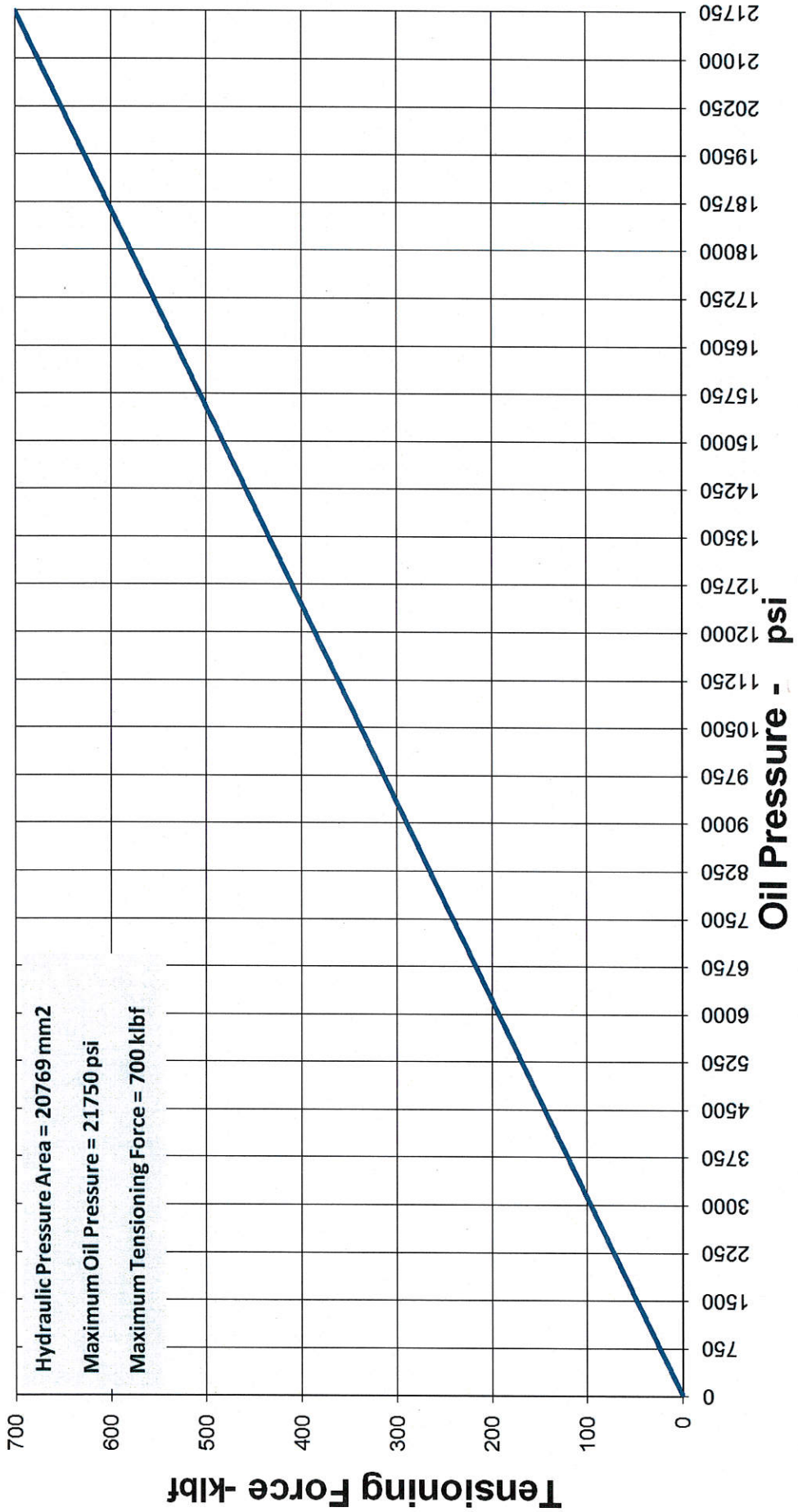

E2 BEARING AND SHEAR KEY – ANCHOR ROD STRESSING

TENSIONING LOAD AND JACKING PRESSURE CALCULATIONS

Tension Load Calculation:

$f_u = 965\ MPa\ (140\ ksi)$

$Stress\ Area\ (A) = 5.97\ in^2$

$Target\ Pretension\ Load\ (F_T) = 0.7 f_u A$

$$F_T = 0.7(140\ ksi)(5.97\ in^2) = 585\ kip$$

$Seating\ Loss\ Factor\ (SL) = 1.10\ \ [per\ Boltight\ Specification]$

$Target\ Jacking\ Load\ (F_J) = (SL)(F_T)$

$$F_J = (1.10)(585\ kips) = 643.5\ kip$$

$Maximum\ Allowable\ Jacking\ Load\ (F_{max}) = 0.75 f_u A$

$$F_{max} = 0.75(140\ ksi)(5.97\ in^2) = 626.9\ kip$$

$$F_{max} < F_J$$

$\therefore\ F_{max}\ governs\ and\ Actual\ Pretension\ Load\ (F_{Actual}) = \dfrac{F_{max}}{SL}$

$$F_{Actual} = \frac{626.9\ kip}{1.10} = 569.9\ kip$$

Hydraulic Jacking Pressure Calculation:

$Hydraulic\ Pressure\ Area\ (A_{jack}) = 32.19\ in^2\ [per\ Boltight\ Specification]$

$Jacking\ Pressure\ (P_{jack}) = \dfrac{F_{max}}{A_{jack}}$

$$P_{jack} = \frac{626.9\ kip}{32.19\ in^2} = 19{,}480\ psi$$

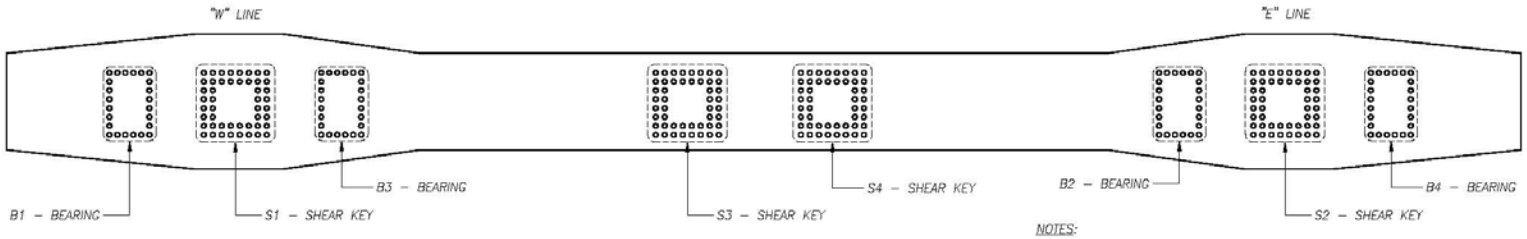

E2 BEARING AND SHEAR KEY ANCHOR ROD LAYOUT

PIER E2 PLAN AT TOP OF CONCRETE

NORTH (SEE NOTE 3)

NOTES:

1. FOR GENERAL NOTES AND INFORMATION NOT SHOWN SEE SHEET DE353A OF ABF–SUB–002757R0.
2. ANCHOR ROD I.D. LOCATIONS APPLY TO ALL RODS FOR ALL BEARINGS AND SHEAR KEYS.
3. ORIENTATION OF ANCHOR ROD I.D. KEY, AND CORRESPONDING ROD I.D. IS CONSISTENT FOR ALL BEARING AND SHEAR KEY ANCHOR ROD PATTERNS.
4. A REFERENCE MARK IS PROVIDED FOR GENERAL ORIENTATION OF THE ANCHOR ROD. THE REFERENCE MARK LOCATION MAY VARY SLIGHTLY FROM THE ORIENTATION AT FAILURE DUE TO ROTATION OF THE ROD AS IT WAS PULLED UP THROUGH THE HOLE.
5. ON 03–14–13, THE TENSION IN SHEAR KEY S1 RODS WAS REDUCED BY JACKING TO 0.45Fy (307kips) AFTER SEATING LOSSES. ROD A2 BROKE AT ABOUT 12:15pm PRIOR TO JACKING OPERATIONS. ROD B2 BROKE DURING JACKING AT ABOUT 612kips (19,000psi).
6. ON 03–15–13, THE TENSION IN SHEAR KEY S2 RODS WAS REDUCED BY JACKING TO 0.45Fy (307kips) AFTER SEATING LOSSES. ROD A8 BROKE DURING JACKING AT ABOUT 547kips (17,000psi).

CURRENT STRESSING STATUS (AS OF 3–15–2013):

– FINAL TENSIONING ON ALL RODS:
  S1 SHEAR KEY (03–02–13, COLUMNS B–G, AND 03–05–13, COLUMNS A AND H)
  S2 SHEAR KEY (03–01–13, ALL COLUMNS)

– TENSION REDUCTION TO 0.45Fy (307kips) AFTER SEATING LOSSES:
  S1 SHEAR KEY (03–14–13, TENSION IN ALL UNBROKEN RODS WAS REDUCED EXCEPT FOR G6 AND H5 WHICH WERE RELEASED ON 03–15–13)
  S2 SHEAR KEY (03–15–13, TENSION IN ALL UNBROKEN RODS WAS REDUCED EXCEPT FOR H1 WHICH COULD NOT BE RELEASED WITH THE JACKING EQUIPMENT)

– ALL REMAINING BEARINGS (B1–B4) AND SHEAR KEYS (S3–S4) HAVE NOT BEEN STRESSED.

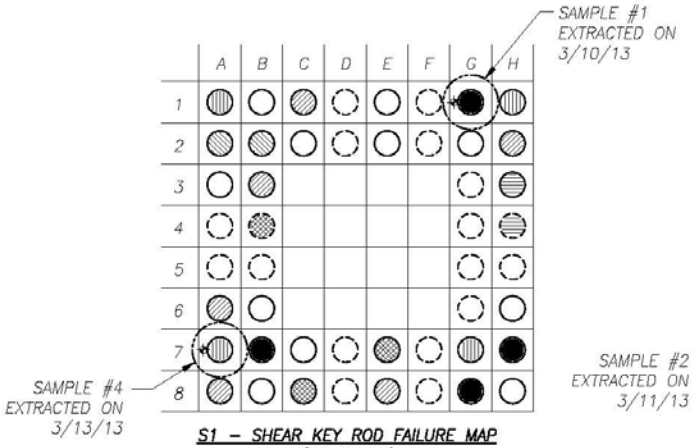

S1 – SHEAR KEY ROD FAILURE MAP (21 OF 48)

PLAN VIEW (LOOKING DOWN)

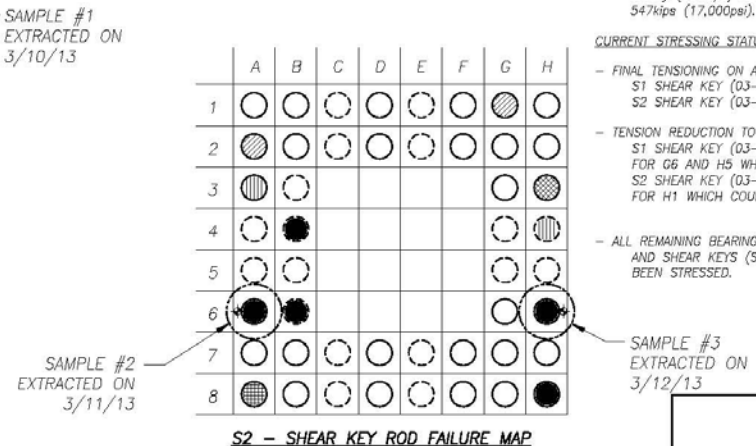

S2 – SHEAR KEY ROD FAILURE MAP (11 OF 48)

PLAN VIEW (LOOKING DOWN)

LEGEND

ANCHOR ROD LENGTH

- ANCHOR ROD LENGTH = 17'–2⅛"
- ANCHOR ROD LENGTH = 9'–1½"
- REFERENCE MARK LOCATION (SEE NOTE 4)

DATE ROD BREAK DISCOVERED

- 3/08/13
- 3/09/13
- 3/11/13
- 3/12/13
- 3/13/13
- 3/14/13 (SEE NOTE 5)
- 3/15/13 (SEE NOTE 6)

REV	DATE	DWG BY	DWG CHK	DSGN BY	DSGN CHK	DESCRIPTION
6						
5	03/15/13	KMS				03/15/13 UPDATE, S2 ROD TENSION REDUCED
4	03/14/13	KMS				03/14/13 UPDATE, S1 ROD TENSION REDUCED
3	03/13/13	KMS				03/13/13 UPDATE
2	03/12/13	ECB				03/12/13 UPDATE
1	03/11/13	ECB				03/11/13 UPDATE

FOR INFORMATION

STATE OF CALIFORNIA
DEPARTMENT OF TRANSPORTATION
CONTRACT NO. 04-0120F4
BRIDGE NO. 34-0006L/R

DISTRICT	COUNTY	ROUTE	KILOMETER POST
04	SF	80	13.2 / 13.9

SAN FRANCISCO OAKLAND BAY BRIDGE
EAST SPAN SEISMIC SAFETY PROJECT
SELF ANCHORED SUSPENSION BRIDGE
(SUPERSTRUCTURE AND TOWER)

E2 BEARING AND SHEAR KEY
ERECTION PLAN: ANCHOR ROD STRESSING
ANCHOR ROD FAILURE MAP

American Bridge / FLUOR — A JOINT VENTURE

Design By: Date:
Design Chk: Date:
Drawn By: Z. LAURIA Date: 3/11/13
Drawing Chk: K. SMITH Date: 3/11/13
In Charge Of: R. KICK

Job No. 660110 | Sheet No. SK-20130311
Scale: NTS | Revision: 5

Mar 15, 2013 – 4:58pm D:\Abfjv02\Jobfdot\010_Common\E2 Anchor Rod Failure\Failure Maps\E2 Anchor Rod Failure Map REV5.dwg

State of California
Department of Transportation

Structural Materials Testing Laboratory
5900 Folsom Boulevard, Sacramento, CA 95819

TEST REPORT

ACCREDITED
CERTIFICATE NO. 2364.01

Remarks ref: ASTM A354 BD, TM03. Heat Numbers Not Available. Test Results Attached.

Sample No: SM-13-0251
Date Sampled: 03/12/13 **Date Rec'd:** 03/12/13 **Date Reported:** 03/13/13
Lot No: B21203513 **TL-101 / SIC No:** C710506
Contract/Permit No: 04-0120F4
Material: 3" A354 BD Shear Key Anchor Bolts
Manufacturer: Unknown
Sampler: Scott Croff

3-13

Results: Report ONLY!

SOURCE	DISTRICT	E.A.	SUB JOB	SPECIAL DESIGNATION	OBJECT
59318	04	0120F3			1270

TL-101

Reviewed by: Glen Weldon
Lab Manager

Approved by:
Quality Manager

Print

.500 SAMPLES

Department of Transportation
Structural Materials Testing Laboratory
UTM: BALDWIN 60 Kip

SM Number = 13-0251

Temperature 70°

Sample	Heat Number	Diameter (in)	Area (in²)	Stress at Offset (psi)	Tensile Strength (psi)	Elongation in 4 x d (%)	Tested By
A6A	S2-A6	0.506	0.2011	137185	162600	13.6	ddrane
A6B	S2-A6	0.506	0.2011	137038 OK	162440 OK	14.4 OK	ddrane
G1A	S1-G1	0.506	0.2011	131419	156520	15.7	ddrane
G1B	S1-G1	0.505	0.2003	137319 OK	161660 OK	14.6 OK	ddrane
H6A	S2-H6	0.505	0.2003	144989	167570	14.5	ddrane
H6B	S2-H6	0.505	0.2003	131042 OK	156370 OK	14.6 OK	ddrane