REQUEST TO CPUC STAFF FOR AUTHORIZATION TO ALTER HIGHWAY-RAIL CROSSING PURSUANT TO GENERAL ORDER 88-B

1. Date Submitted: September 9, 2010

2. Applicant Info

Organization Name:	California Department of Transportation
Contact Person:	Denny Fong, P.E.
Title:	Senior Transportation Engineer
Street Address:	1120 N Street, MS-37
City:	Sacramento, CA
Zip:	95814
Phone:	(916) 654-3070
Email:	Denny_fong@dot.ca.gov

3. Crossing proposed to be altered

PUC Crossing Number:	001BM-513.40-A
U.S. DOT Crossing Number:	761634W
Street Name:	Orange FWY (SR 57) OH, known as Douglass OH
City:	Anaheim
County:	Orange
Railroad Responsible for Crossing:	Union Pacific Railroad
Other Railroads Operating on Tracks:	N/A

4. Describe Proposed Alterations (including any temporary reduced clearance variance requests):

The California Department of Transportation, in cooperation with the Orange County Transportation Authority (OCTA), proposes to widen the northbound State Route (SR) 57, between 0.31 miles south of Katella Avenue and 0.31 miles north of Lincoln Avenue within the city of Anaheim in Orange County, California. Douglass Overhead (OH) is within the project limits and will be widened approximately 20'6" to accommodate the widening of the SR 57. Douglass OH crosses over the single track mainline of the Union Pacific Railroad (UPRR) and Cerritos Avenue.

A CPUC G.O. 26-D variance is required for this location for the temporary construction vertical clearance of 21'0" in order to construct temporary falsework.

EXAMPLE A

Permanent vertical clearance is 23'0", which is in compliance with CPUC G.O. 26-D requirements.

UPRR is in agreement with the temporary horizontal and vertical clearances.

OCTA/Metrolink, Stadium (SR 57) OH, CPUC 1010R-170.80-A, US DOT 026976W, is within the project limits but there will be no involvement.

5. Describe the public benefits to be achieved by the proposed alterations:

The project is needed to relieve congestion. Existing northbound daily traffic conditions experience substantial congestion in the peak hour period and is forecasted to get worse. Projected northbound daily traffic volumes within the project limits for the design year of 2035 are expected to increase by more than 25 percent with the peak hour volumes expected to increase by nearly 75 percent. This project will reduce corridor delay, thereby providing a substantial benefit to the corridor and regional traffic circulation.

6. Explain why a separation of grades is not practicable:

N/A – This is an existing grade separated crossing.

7. Describe crossing warning devices

Current:	N/A – this is an existing grade separation
Proposed:	N/A – the crossing is to remain grade separated

8. Temporary Traffic Controls - Include a statement of temporary traffic controls to be provided during construction:

The temporary traffic controls shall be in accordance with the California Manual of Uniform Traffic Control Devices. UPRR will provide flagging for rail traffic during construction.

9. Signature

I, Denny Fong, P.E., am an employee of the State of California, Department of Transportation and authorized to sign this GO 88-B authorization request letter on its behalf.

Denny Fong 9/9/10

Denny Fong, P.E. Signature and date
Senior Transportation Engineer

EXAMPLE B

Attachments:

1. Exhibit A – Vicinity Map and Title Sheet
2. Exhibit B – Structure General Plan
3. Exhibit C – Negative Declaration

EXAMPLE C

10. Evidence of Agreement:

I, Freddy Cheung, P.E., am an employee of Union Pacific Railroad Company and authorized to sign this letter of agreement on its behalf, hereby declare that Union Pacific Railroad Company concurs with the proposed project described above as the SR 57 northbound widening project between Katella Avenue and Lincoln Avenue in Orange County, CA.

Freddy Cheung 9/10/2010

Freddy Cheung, P.E. Signature and date

2015 South Willow Avenue
Bloomington, CA 92316
Address

EXAMPLE D

INDEX OF PLANS

STATE OF CALIFORNIA
DEPARTMENT OF TRANSPORTATION

PROJECT PLANS FOR CONSTRUCTION ON
STATE HIGHWAY
IN ORANGE COUNTY
IN ANAHEIM
FROM 0.3 MILE SOUTH OF KATELLA AVENUE UNDERCROSSING TO 0.3 MILE NORTH OF LINCOLN AVENUE OVERCROSSING

TO BE SUPPLEMENTED BY STANDARD PLANS DATED MAY 2006

Dist	COUNTY	ROUTE	POST MILES TOTAL PROJECT	SHEET No.	TOTAL SHEETS
12	Ora	57	12.2/15.2		

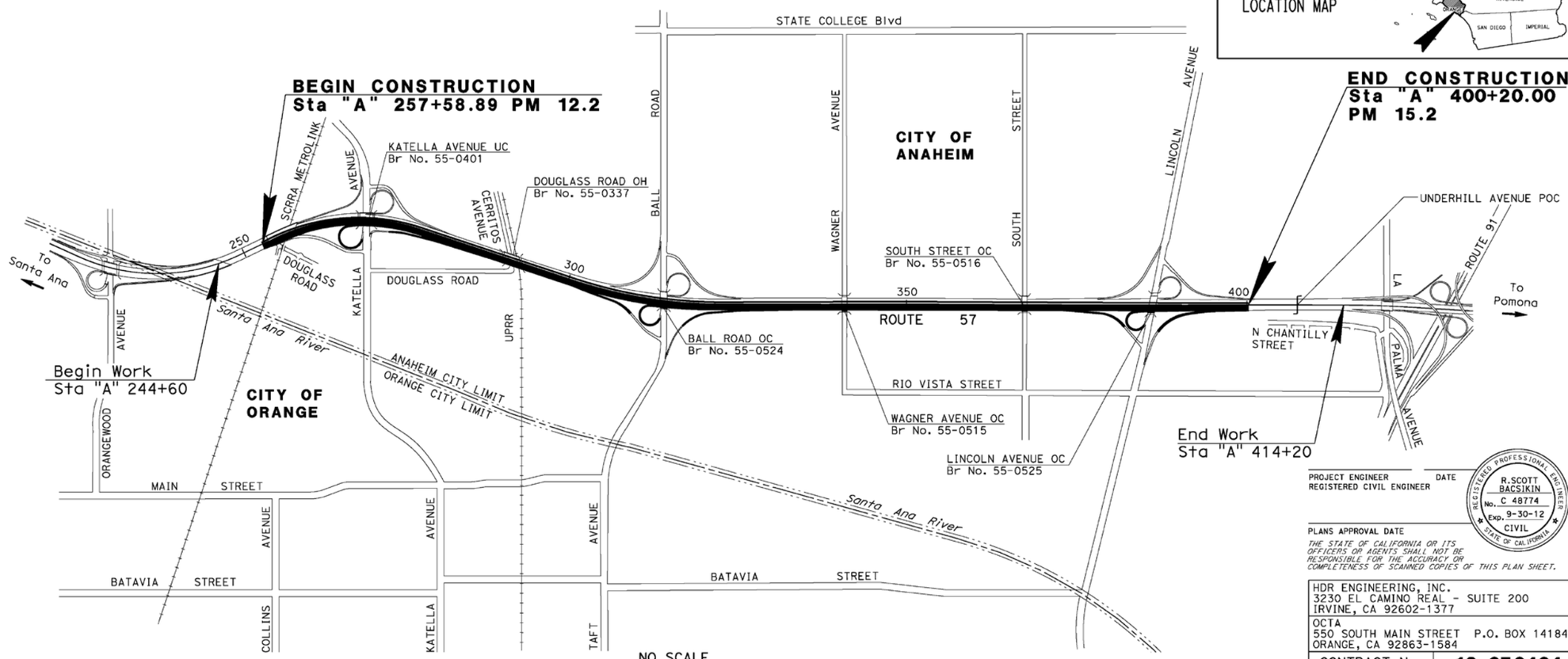

THE CONTRACTOR SHALL POSSESS THE CLASS (OR CLASSES) OF LICENSE AS SPECIFIED IN THE "NOTICE TO BIDDERS."

APPROVED AS TO IMPACT ON STATE FACILITIES AND CONFORMANCE WITH APPLICABLE STATE STANDARDS AND PRACTICES AND THAT TECHNICAL OVERSIGHT WAS PERFORMED.

CONSULTANT DESIGN ENGINEER	CALTRANS DESIGN OVERSIGHT APPROVAL	REGISTRATION No.	LICENSE Exp DATE	DATE SIGNED
R. SCOTT BACSIKIN	KAMRAN MAZHAR	C 48436	6-30-12	

PROJECT ENGINEER REGISTERED CIVIL ENGINEER — DATE

REGISTERED PROFESSIONAL ENGINEER — R.SCOTT BACSIKIN — No. C 48774 — Exp. 9-30-12 — CIVIL — STATE OF CALIFORNIA

PLANS APPROVAL DATE

THE STATE OF CALIFORNIA OR ITS OFFICERS OR AGENTS SHALL NOT BE RESPONSIBLE FOR THE ACCURACY OR COMPLETENESS OF SCANNED COPIES OF THIS PLAN SHEET.

HDR ENGINEERING, INC.
3230 EL CAMINO REAL - SUITE 200
IRVINE, CA 92602-1377

OCTA
550 SOUTH MAIN STREET P.O. BOX 14184
ORANGE, CA 92863-1584

CONTRACT No.	12-0F0404
PROJECT ID	1200000109

LAST REVISION 10-11-10 | DATE PLOTTED => 23-APR-2015 | TIME PLOTTED => 10:11

BORDER LAST REVISED 7/2/2010 | CALTRANS WEB SITE IS: HTTP//WWW.DOT.CA.GOV/ | RELATIVE BORDER SCALE IS IN INCHES 0 1 2 3 | USERNAME => s121614 DGN FILE => c0f040ab001.dgn | UNIT 12-2998 | PROJECT NUMBER & PHASE 12000001091

EXHIBIT A

DIST	COUNTY	ROUTE	POST MILES TOTAL PROJECT	SHEET No	TOTAL SHEETS
12	Ora	57	12.2/15.2		

REGISTERED CIVIL ENGINEER DATE

PLANS APPROVAL DATE

REGISTERED PROFESSIONAL ENGINEER ERIC A. JOHNSON No. C57355 Exp. 12/31/11 CIVIL STATE OF CALIFORNIA

The State of California or its officers or agents shall not be responsible for the accuracy or completeness of scanned copies of this plan sheet.

OCTA
550 S. MAIN STREET
ORANGE, CA 92863

HDR ENGINEERING, INC.
3230 EL CAMINO REAL, SUITE 200
IRVINE, CA 92602-1377

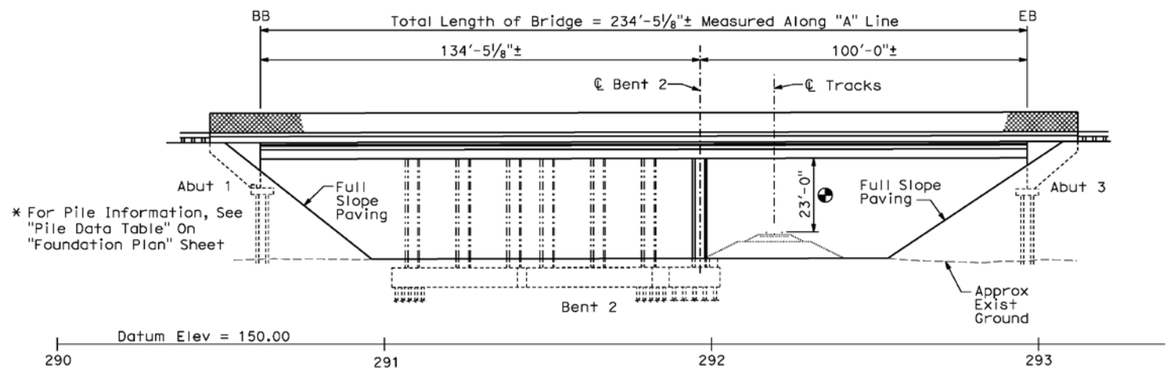

ELEVATION

SCALE 1"=20'

LEGEND

1. Structure Approach Slab Type N(30D)
2. Structure Approach Slab Type R(30D)
3. Remove Exist Type 9 Barrier And Salvage Metal Railing
4. Paint "DOUGLASS OVERHEAD"
5. Paint "BRIDGE No. 55-0337" And Year Constructed
6. Joint Seal Replacement (Exist)
7. Paving Notch Extension

Indicates Bridge Removal (Portion)
Indicates New Construction
Indicates Foundation or Hidden Lines
Indicates Existing Structure
Min Vert Clearance 23'-0" (Structure)

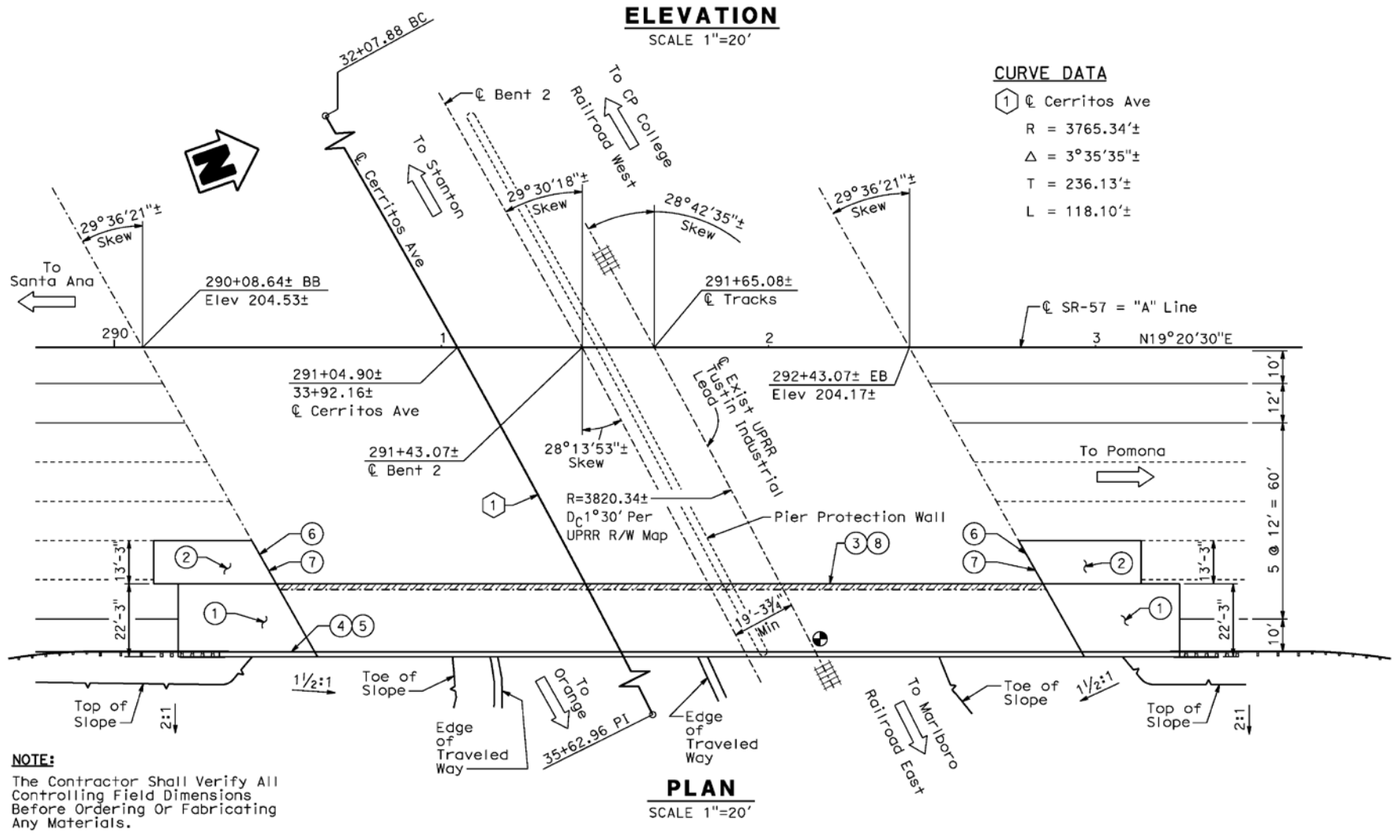

CURVE DATA

(1) ℄ Cerritos Ave
R = 3765.34'±
Δ = 3°35'35"±
T = 236.13'±
L = 118.10'±

NOTE:
The Contractor Shall Verify All Controlling Field Dimensions Before Ordering Or Fabricating Any Materials.

PLAN

SCALE 1"=20'

Vehicular Traffic

1. ___New alignment. No traffic at the site.
2. ___Traffic will be detoured away from the site.
3. X Traffic will be carried on the structure. Stage construction will/will not be required.
4. X Traffic will pass under the structure on Douglass Rd
   A. ___No falsework allowed over traffic.
   B. X Falsework opening(s) required:

		Temporary Vertical Clearance	Width of Traffic Opening
___	Bnd	___	___
___	Bnd	___	___
X	Two-way	15'-0"	48'-0"

   C. ___Temporary traffic lane reduction needed for footing excavation.

Pedestrian Traffic

Falsework opening required on Cerritos Ave

Location	Height	Width
EB	7'-0"	5'-0"

Railroad Traffic

Falsework opening required over UPRR

Vertical Clearance	Horizontal Clear Width
21'-0"	12'-0"

DESIGN OVERSIGHT	DESIGN	BY J. Ramirez	CHECKED W. Chu	LOAD & RESISTANCE FACTOR DESIGN	LIVE LOADING: HL93 W/"LOW-BOY"; PERMIT DESIGN VEHICLE
SIGN OFF DATE	DETAILS	BY E. Gray	CHECKED W. Chu	LAYOUT	BY J. Ramirez / CHECKED W. Chu
	QUANTITIES	BY J. Ramirez	CHECKED Z. Daniel	SPECIFICATIONS	BY E. Johnson / PLANS AND SPECS COMPARED

PREPARED FOR THE STATE OF CALIFORNIA DEPARTMENT OF TRANSPORTATION

ERIC A. JOHNSON
PROJECT ENGINEER

BRIDGE NO. 55-0337
POST MILES 13.0

DOUGLASS OH (WIDEN)
GENERAL PLAN NO. 1

DESIGN GENERAL PLAN SHEET (ENGLISH) (REV. 06-01-09)

ORIGINAL SCALE IN INCHES FOR REDUCED PLANS 0 1 2 3

CU 12231
EA 0F0401

FILE => 55-0337r-a-gp01.dgn

DISREGARD PRINTS BEARING EARLIER REVISION DATES

REVISION DATES (PRELIMINARY STAGE ONLY) 11/09 2/10 3/10 5/10 8/10

SHEET 1 OF 27

USERNAME => s12614 DATE PLOTTED => 23-APR-2015 TIME PLOTTED => 10:12

EXHIBIT B

DIST	COUNTY	ROUTE	POST MILES TOTAL PROJECT	SHEET No	TOTAL SHEETS
12	Ora	57	12.2/15.2		

REGISTERED CIVIL ENGINEER DATE

PLANS APPROVAL DATE

REGISTERED PROFESSIONAL ENGINEER ERIC A. JOHNSON No. C57355 Exp. 12/31/11 CIVIL STATE OF CALIFORNIA

The State of California or its officers or agents shall not be responsible for the accuracy or completeness of scanned copies of this plan sheet.

OCTA
550 S. MAIN STREET
ORANGE, CA 92863

HDR ENGINEERING, INC.
3230 EL CAMINO REAL, SUITE 200
IRVINE, CA 92602-1377

LEGEND

(3) Remove Exist Type 9 Barrier And Salvage Metal Railing

(4) Paint "DOUGLASS OVERHEAD"

(5) Paint "BRIDGE No. 55-0337" And Year Constructed

Indicates Bridge Removal (Portion)

Indicates New Construction

Indicates Foundation or Hidden Lines

Indicates Existing Structure

Min Vert Clearance 23'-0" (Structure)

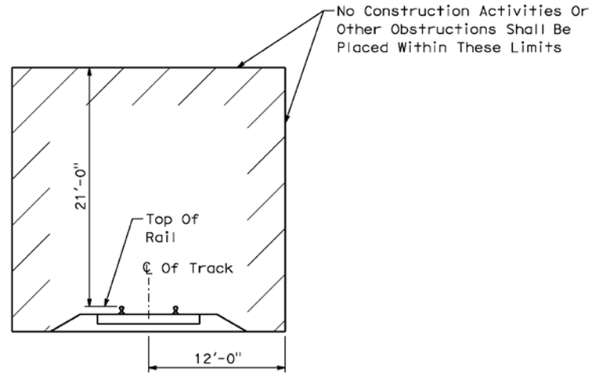

MINIMUM CONSTRUCTION CLEARANCE ENVELOPE

NTS

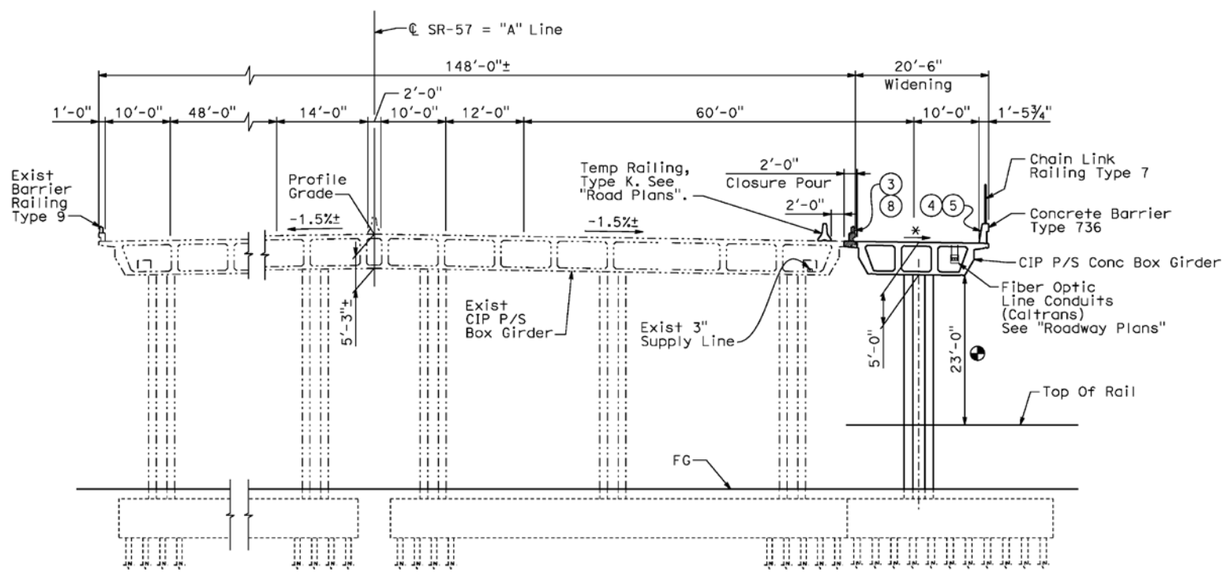

TYPICAL SECTION

SCALE 1"=10'

* Match Existing

NOTE:

The Contractor Shall Verify All Controlling Field Dimensions Before Ordering Or Fabricating Any Materials.

FINAL PAY QUANTITIES

STRUCTURE EXCAVATION (BRIDGE)	239	CY
STRUCTURE BACKFILL (BRIDGE)	148	CY
STRUCTURAL CONCRETE, BRIDGE FOOTING	70	CY
STRUCTURAL CONCRETE, BRIDGE	394	CY
STRUCTURAL CONCRETE, APPROACH SLAB N(TYPE 30D)	46	CY
STRUCTURAL CONCRETE, APPROACH SLAB R(TYPE 30D)	33	CY
PAVING NOTCH EXTENSION	1	CY
BAR REINFORCING STEEL (BRIDGE)	118,458	LB
SLOPE PAVING (CONCRETE)	22	CY
CONCRETE BARRIER (TYPE 736)	195	LF
CHAIN LINK RAILING (TYPE 7)	267	LF

APPROXIMATE QUANTITIES

TEMPORARY RAILING (TYPE K)	520	LF
SALVAGE METAL BRIDGE RAILING	267	LF
REMOVE CONCRETE (WINGWALL)	4	CY
BRIDGE REMOVAL (PORTION),	LUMP	SUM
FURNISH STEEL PILING (HP 10 X 42)	564	LF
DRIVE STEEL PILE (HP 10 X 42)	11	EA
FURNISH PILING (CLASS 90)	1,212	LF
DRIVE PILE (CLASS 90)	33	EA
PRESTRESSING STEEL	23,617	LB
DRILL AND BOND DOWEL	47	LF
JOINT SEAL (MR 2")	82	LF
SHORING	2,760	SF
WELDED STEEL PIPE CASING	79	LF

DESIGN OVERSIGHT	DESIGN	BY J. Ramirez	CHECKED W. Chu	LOAD & RESISTANCE FACTOR DESIGN	LIVE LOADING: HL93 W/"LOW-BOY"; PERMIT DESIGN VEHICLE
	DETAILS	BY E. Gray	CHECKED W. Chu	LAYOUT BY J. Ramirez	CHECKED W. Chu
SIGN OFF DATE	QUANTITIES	BY J. Ramirez	CHECKED Z. Daniel	SPECIFICATIONS BY E. Johnson	PLANS AND SPECS COMPARED

PREPARED FOR THE STATE OF CALIFORNIA DEPARTMENT OF TRANSPORTATION

ERIC A. JOHNSON
PROJECT ENGINEER

BRIDGE NO. 55-0337
POST MILES 13.0

DOUGLASS OH (WIDEN)
GENERAL PLAN NO. 2

DESIGN GENERAL PLAN SHEET (ENGLISH) (REV. 06-01-09)

ORIGINAL SCALE IN INCHES FOR REDUCED PLANS 0 1 2 3

CU 12231
EA 0F0401

DISREGARD PRINTS BEARING EARLIER REVISION DATES

REVISION DATES (PRELIMINARY STAGE ONLY) 11/09 2/10 5/10 6/10 8/10

SHEET 2 OF 27

FILE => 55-0337r-a-gp02.dgn

USERNAME => s121614 DATE PLOTTED => 23-APR-2015 TIME PLOTTED => 10:12

EXHIBIT B

Dist	COUNTY	ROUTE	POST MILES TOTAL PROJECT	SHEET No.	TOTAL SHEETS
12	Ora	57	12.2/15.2		

REGISTERED CIVIL ENGINEER DATE

PLANS APPROVAL DATE

REGISTERED PROFESSIONAL ENGINEER R.SCOTT BACSIKIN No. C 48774 Exp. 9-30-12 CIVIL STATE OF CALIFORNIA

THE STATE OF CALIFORNIA OR ITS OFFICERS OR AGENTS SHALL NOT BE RESPONSIBLE FOR THE ACCURACY OR COMPLETENESS OF SCANNED COPIES OF THIS PLAN SHEET.

HDR ENGINEERING, INC.
3230 EL CAMINO REAL
SUITE 200
IRVINE, CA 92602-1377

OCTA
550 SOUTH MAIN STREET
P.O. BOX 14184
ORANGE, CA 92863-1584

NOTE:

FOR ACCURATE RIGHT OF WAY DATA, CONTACT RIGHT OF WAY ENGINEERING AT THE DISTRICT OFFICE.

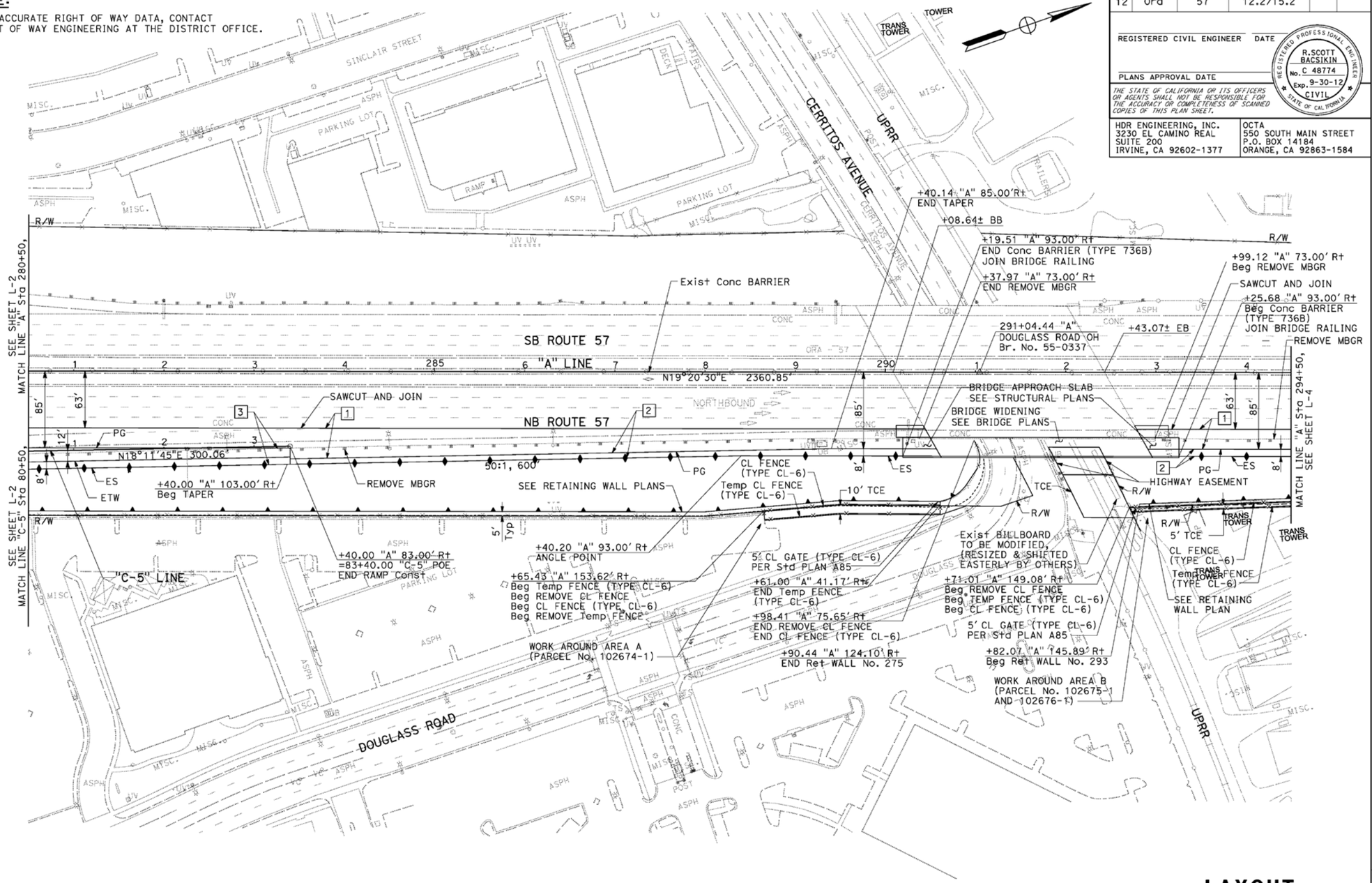

NOT FOR CONSTRUCTION

LAYOUT
SCALE: 1" = 50' **L-3**

STATE OF CALIFORNIA - DEPARTMENT OF TRANSPORTATION
Caltrans

CONSULTANT FUNCTIONAL SUPERVISOR: R. SCOTT BACSIKIN
CALCULATED-DESIGNED BY: SHIVA BOUSTANI
CHECKED BY: LIEM A. NGUYEN
REVISED BY
DATE REVISED

LAST REVISION 3-14-11
DATE PLOTTED => 23-APR-2015
TIME PLOTTED => 10:11

BORDER LAST REVISED 7/2/2010
USERNAME => s121614
DGN FILE => c0F040ea003.dgn
RELATIVE BORDER SCALE IS IN INCHES 0 1 2 3
UNIT 12-2998
PROJECT NUMBER & PHASE 12000001091

EXHIBIT B

DIST	COUNTY	ROUTE	POST MILES TOTAL PROJECT	SHEET No	TOTAL SHEETS
12	Ora	57	12.2/15.2		

REGISTERED CIVIL ENGINEER DATE

PLANS APPROVAL DATE

REGISTERED PROFESSIONAL ENGINEER ERIC A. JOHNSON No. C57355 Exp. 12/31/11 CIVIL STATE OF CALIFORNIA

The State of California or its officers or agents shall not be responsible for the accuracy or completeness of scanned copies of this plan sheet.

OCTA
550 S. MAIN STREET
ORANGE, CA 92863

HDR ENGINEERING, INC.
3230 EL CAMINO REAL, SUITE 200
IRVINE, CA 92602-1377

LEGEND

- Indicates New Construction
- Indicates Existing
- XXX.XX Indicates Bottom Of Footing Elevation
- XXX.XX± Indicates Bottom Of Exist Footing Elevation

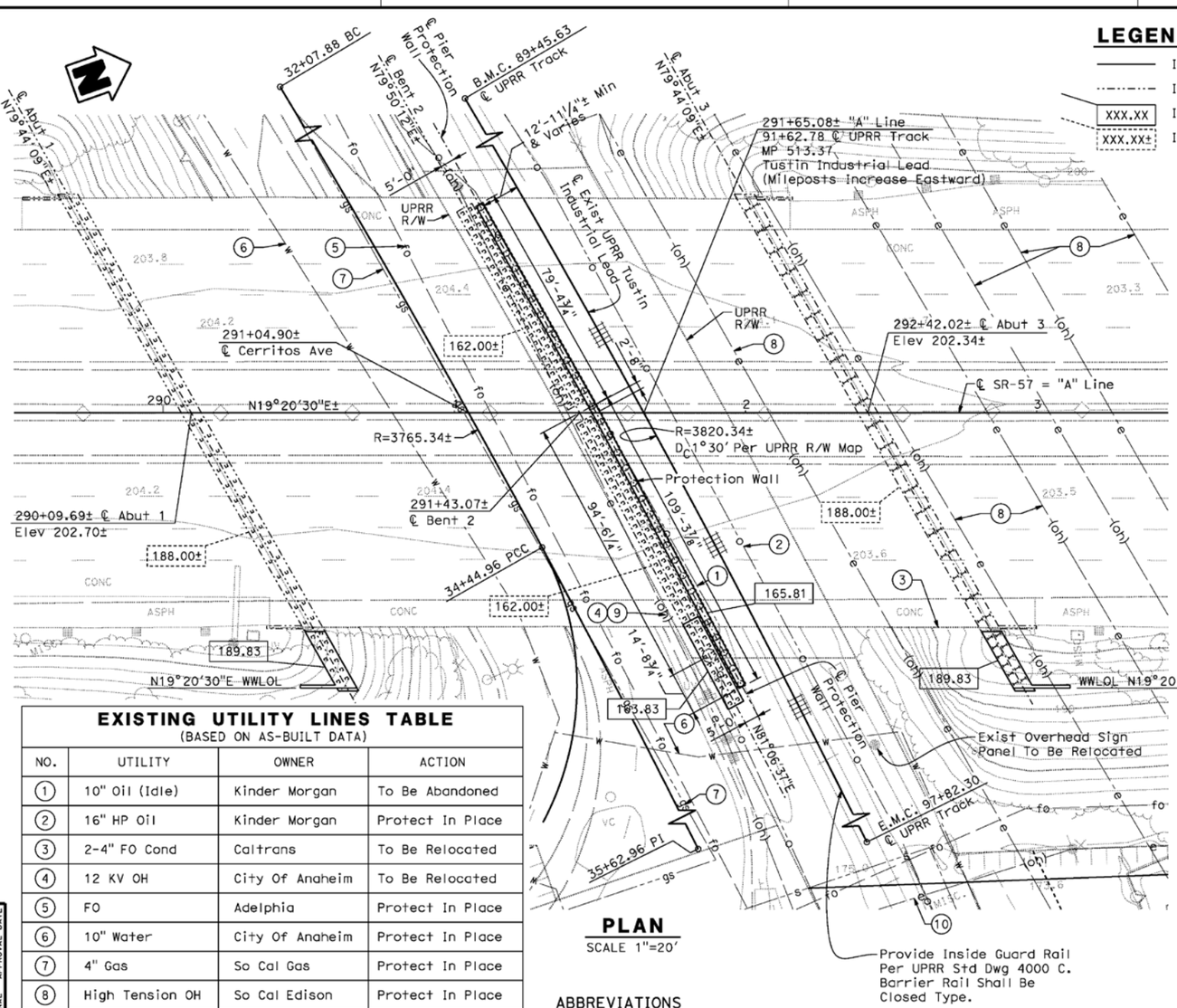

PLAN
SCALE 1"=20'

PILE DATA TABLE (DRIVEN PILES)

Location	Pile Type	Nominal Resistance (kips)		Design Tip Elevation (ft)	Specified Tip Elevation (ft)	Nominal Driving Resistance (kips)
		Compression	Tension			
Abut 1	Conc Pile, Class 90 Alt X	170	-	141.0(a) 144.0(c) 169.0(d)	141.0	170
Bent 2	Conc Pile, Class 90 Alt X	180	-	122.0(a) 132.0(c) 143.0(d)	122.0	180
Abut 3	HP 10x42 Steel Pile	140	-	134.0(a) 139.0(c) 169.0(d)	134.0	140

Notes:
1. Design Tip Elevations Are Controlled By:
   (a) Compression; (c) Settlement; (d) Lateral Load.
2. The Specified Tip Elevation Shall Not Be Raised Above The Design Tip Elevations For Lateral And Tolerable Settlement.

PILE DATA TABLE (CIDH PILES)

Location	Pile Type	Cut-off Elevation (ft)	Nominal Resistance (kips)		Design Tip Elevation (ft)	Specified Tip Elevation (ft)
			Compression	Tension		
Protection Wall	24" Dia CIDH	166.06	35	-	159.0(a) 159.0(c) 139.0(d)	139.0

Notes:
1. Design Tip Elevations Are Controlled By:
   (a) Compression; (c) Settlement; (d) Lateral Load.
2. The Specified Tip Elevation Shall Not Be Raised Above The Design Tip Elevations For Compression, Lateral, And Tolerable Settlement.

EXISTING UTILITY LINES TABLE
(BASED ON AS-BUILT DATA)

NO.	UTILITY	OWNER	ACTION
1	10" Oil (Idle)	Kinder Morgan	To Be Abandoned
2	16" HP Oil	Kinder Morgan	Protect In Place
3	2-4" FO Cond	Caltrans	To Be Relocated
4	12 KV OH	City Of Anaheim	To Be Relocated
5	FO	Adelphia	Protect In Place
6	10" Water	City Of Anaheim	Protect In Place
7	4" Gas	So Cal Gas	Protect In Place
8	High Tension OH	So Cal Edison	Protect In Place
9	CATV OH	Adelphia	To Be Relocated
10	12 KV OH	City Of Anaheim	Protect In Place

NOTE:
The Contractor Shall Verify All Controlling Field Dimensions Before Ordering Or Fabricating Any Materials.

ABBREVIATIONS

HP = High Pressure
FO = Fiber Optic
KV = Kilovolts

GEOTECHNICAL PROFESSIONAL APPROVAL DATE

DESIGN OVERSIGHT
SIGN OFF DATE

SCALE: 1"=20' | VERT.DATUM | HORZ.DATUM
PHOTOGRAMMETRY AS OF: | ALIGNMENT TIES
SURVEYED BY E. Martinez | DRAFTED BY
FIELD CHECKED BY D. Williams | CHECKED BY

DESIGN BY J. Ramirez CHECKED W. Chu
DETAILS BY E. Gray CHECKED W. Chu
QUANTITIES BY J. Ramirez CHECKED Z. Daniel

PREPARED FOR THE STATE OF CALIFORNIA DEPARTMENT OF TRANSPORTATION

ERIC A. JOHNSON
PROJECT ENGINEER

BRIDGE NO. 55-0337
POST MILE 13.0

DOUGLASS OH (WIDEN)
FOUNDATION PLAN

FOUNDATION PLAN SHEET (ENGLISH) (REV. 06-01-09)

ORIGINAL SCALE IN INCHES FOR REDUCED PLANS 0 1 2 3

EA 0F0404

DISREGARD PRINTS BEARING EARLIER REVISION DATES
REVISION DATES (PRELIMINARY STAGE ONLY) 10/05 2/10 3/10 5/10 8/10

SHEET 4 OF 27

FILE => 55-0337r-e-fp101.dgn

USERNAME => s121614 DATE PLOTTED => 23-APR-2015 TIME PLOTTED => 10:12

EXHIBIT B

DIST	COUNTY	ROUTE	POST MILES TOTAL PROJECT	SHEET No	TOTAL SHEETS
12	Ora	57	12.2/15.2		

REGISTERED CIVIL ENGINEER DATE

PLANS APPROVAL DATE

REGISTERED PROFESSIONAL ENGINEER ERIC A. JOHNSON No. C57355 Exp. 12/31/11 CIVIL STATE OF CALIFORNIA

The State of California or its officers or agents shall not be responsible for the accuracy or completeness of scanned copies of this plan sheet.

OCTA
550 S. MAIN STREET
ORANGE, CA 92863

HDR ENGINEERING, INC.
3230 EL CAMINO REAL, SUITE 200
IRVINE, CA 92602-1377

FINAL PAY QUANTITIES

STRUCTURE EXCAVATION (RETAINING WALL)	410 CY
STRUCTURE BACKFILL (RETAINING WALL)	190 CY
STRUCTURE CONCRETE (RETAINING WALL)	362 CY
BAR REINFORCING STEEL (RETAINING WALL)	135,561 LB

APPROXIMATE QUANTITIES

SHORING	2,723 SF

INDEX TO PLANS

SHEET No.	DESCRIPTION	SHEET No.	DESCRIPTION
1	GENERAL PLAN	6	SHORING DETAIL
2	FOUNDATION PLAN	7	LOG OF TEST BORINGS - SHEET 1 OF 4
3	PARTIAL PLAN AND ELEVATION	8	LOG OF TEST BORINGS - SHEET 2 OF 4
4	TYPICAL SECTION	9	LOG OF TEST BORINGS - SHEET 3 OF 4
5	TYPICAL WALL DETAILS	10	LOG OF TEST BORINGS (AS-BUILT) - SHEET 4 OF 4

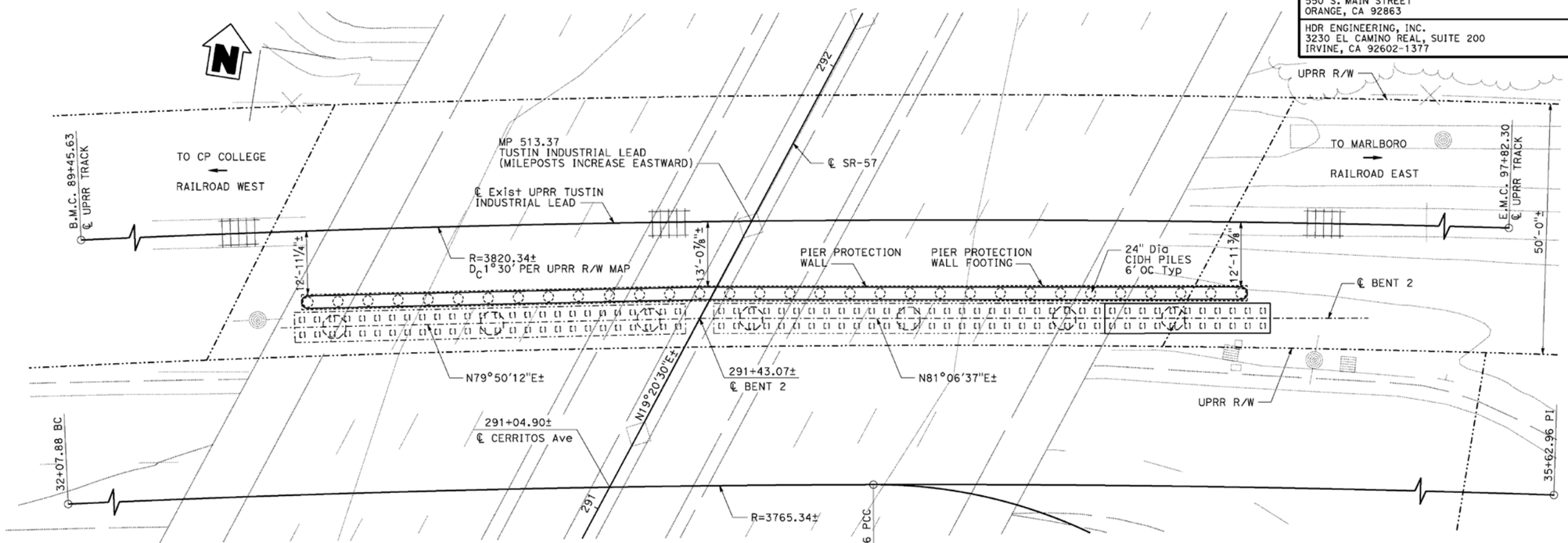

PLAN

DESIGN CRITERIA

DESIGN: UPRR GUIDELINES FOR DESIGN OF HIGHWAY SEPARATION STRUCTURES OVER RAILROAD, 1999; AND AASHTO LRFD BRIDGE DESIGN SPECIFICATIONS, 2007

SEISMIC DESIGN: MANUAL FOR RAILWAY ENGINEERING, 2009; AND CALTRANS SEISMIC DESIGN CRITERIA (SDC), VERSION 1.4, JUNE 2006

LIVE LOAD: LOAD OF 400 kips-[AASHTO 3.6.5.2]

SEISMIC LOADING:
CALTRANS MTD 20-1, SDC APPENDIX B (SEPTEMBER, 2009)
ARS: AS SHOWN
SOIL PROFILE: INITIAL V_{S30} = 880 (ft/sec), LIQUEFACTION: ___YES, _X_NO
NON-LIQUEFACTION CASE: PGA = 0.48 (in g), M (FOR PGA) = 6.6 (M_{mode})

REINFORCED CONCRETE: f'c = 4,000 psi
fy = 60,000 psi

PILES: 24" CIDH CONCRETE PILES

NOTE:
The Contractor shall verify all controlling field dimensions before ordering or fabricating any materials.

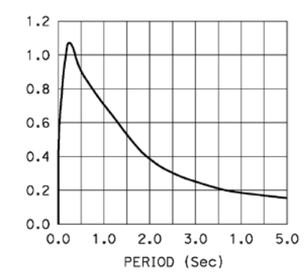

ARS CURVE FOR SAFETY EARTHQUAKE EVENTS (NON-LIQUEFACTION CASE)

DESIGN OVERSIGHT	DESIGN	BY J. Ramirez	CHECKED W. Chu	LOAD & RESISTANCE FACTOR DESIGN	LIVE LOADING: HL93 W/"LOW-BOY"; PERMIT DESIGN VEHICLE
	DETAILS	BY E. Gray	CHECKED W. Chu	LAYOUT BY J. Ramirez	CHECKED W. Chu
SIGN OFF DATE	QUANTITIES	BY J. Ramirez	CHECKED Z. Daniel	SPECIFICATIONS BY E. Johnson	PLANS AND SPECS COMPARED

PREPARED FOR THE STATE OF CALIFORNIA DEPARTMENT OF TRANSPORTATION

ERIC A. JOHNSON
PROJECT ENGINEER

BRIDGE NO. 55-0337
POST MILES 13.0

DOUGLASS OH (WIDEN)
GENERAL PLAN NO. 1

DESIGN GENERAL PLAN SHEET (ENGLISH) (REV. 08-01-09)

ORIGINAL SCALE IN INCHES FOR REDUCED PLANS 0 1 2 3

CU 12231
EA 0F0401

DISREGARD PRINTS BEARING EARLIER REVISION DATES

REVISION DATES (PRELIMINARY STAGE ONLY) 12/09 3/10 5/10 6/10 8/10

SHEET 1 OF 27

FILE => 55-0337r-s-gp01.dgn

USERNAME => s121614 DATE PLOTTED => 28-APR-2015 TIME PLOTTED => 08:05

EXHIBIT B

EXHIBIT C

12-ORA-57-PM 12.2/15.2
EA No.: 0F0400
SCH No. 2009031085

State Route 57 (SR-57), widen the northbound side between 0.31 mile south of Katella Avenue to 0.31 mile north of Lincoln Avenue (Post Mile [PM] 12.2 to PM 15.2) within the City of Anaheim in Orange County, California.

INITIAL STUDY WITH NEGATIVE DECLARATION

Submitted Pursuant to: Division 13, California Public Resources Code

THE STATE OF CALIFORNIA
Department of Transportation

Nov 24, 2009
Date of Approval

CINDY QUON
District Director, District 12
California Department of Transportation

EXHIBIT C

NEGATIVE DECLARATION

SCH No. 2009031085

STATE OF CALIFORNIA
DEPARTMENT OF
TRANSPORTATION

12-ORA-57-PM 12.2/15.2
EA No.: 0F0400

NEGATIVE DECLARATION

Pursuant to: Division 13, Public Resources Code

Description

The California Department of Transportation District 12 (the Department), in cooperation with the Orange County Transportation Authority (OCTA), proposes to widen northbound State Route 57 (SR-57) between Katella Avenue and Lincoln Avenue within the City of Anaheim in Orange County, California. This project would reduce traffic congestion and maximize mainline mobility.

Determination

An Initial Study and Supplemental Initial Study have been prepared by the Department, District 12. On the basis of these studies it is determined that the proposed action will not have a significant effect upon the environment for the following reasons:

The Proposed Project would have no effect on: Farmland/Timberlands, Relocations, Floodplains, Paleontological Resources, Natural Communities, Plant Species, Threatened and Endangered Species, and Invasive Species.

In addition, the Proposed Project would have no significant effect on: Land Use, Growth, Community Character and Cohesion, Environmental Justice, Utilities/Emergency Services, Traffic/Transportation/Pedestrian and Bicycle Facilities, Visual/Aesthetics, Cultural Resources, Water Quality and Storm Water Runoff, Geology/Soils/Seismicity/Topography, Hazardous Waste/Materials, Air Quality, Noise, Wetlands and Other Waters, and Animal Species.

Cindy Quon
District Director
District 12
California Department of Transportation

Nov 24 2009
Date