REVISION			
LTR	DESCRIPTION	DATE	BY

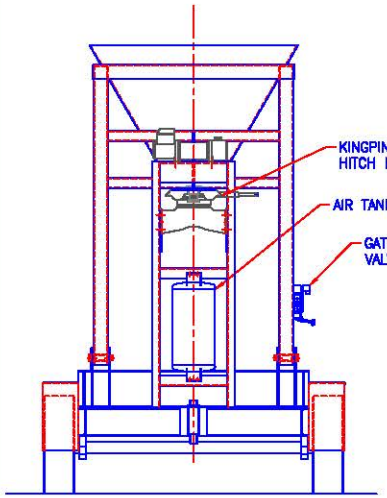

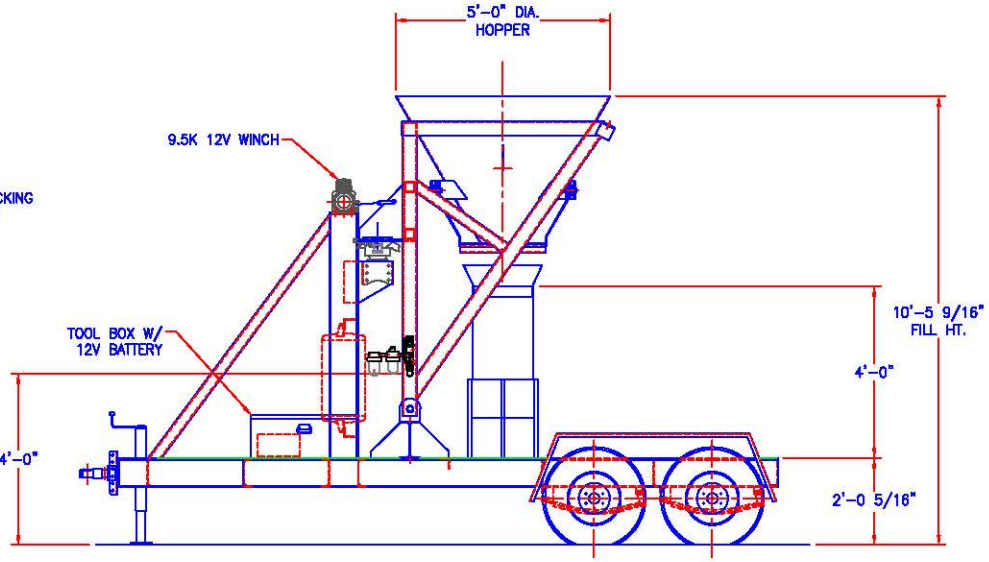

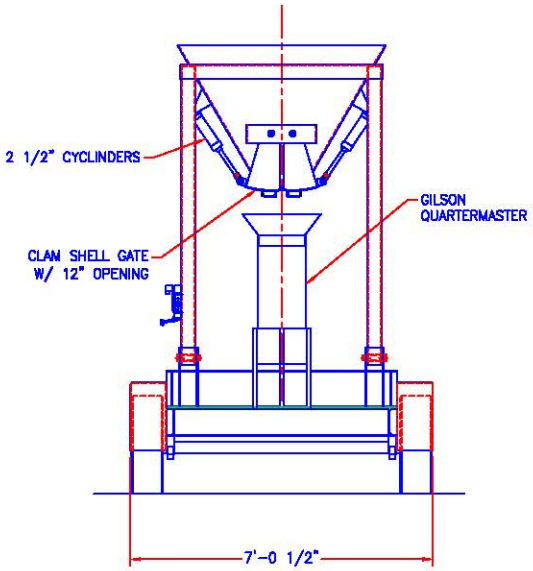

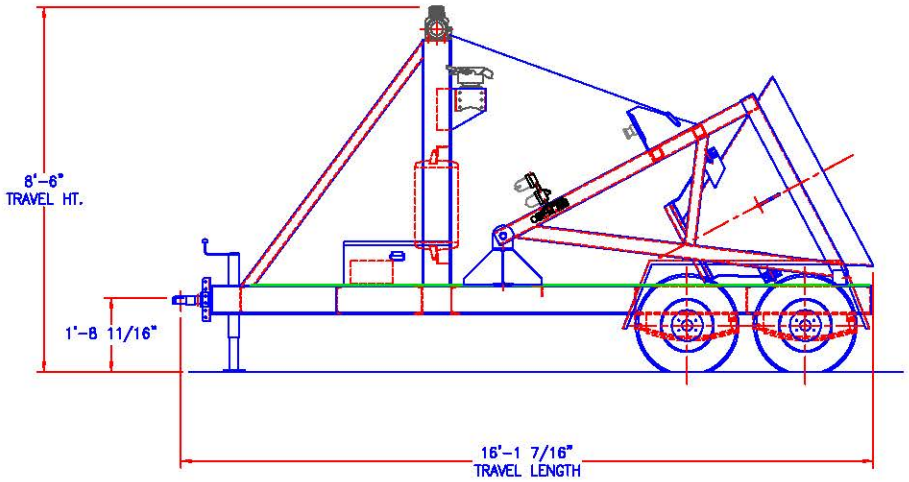

UNLESS OTHERWISE SPECIFIED DIMENSIONS ARE IN INCHES
TOLERANCES:

DECIMAL	FRACTION	OVERALL
.XX± .03	±1/16	<120±3/8
.XXX±.005		>120± 1

COPYRIGHT, 2015 MAXAM EQUIPMENT

DRAWN BY	DATE
ML	5/7/15
CHECKED	DATE
SCALE	
NONE	

Asphalt
Plant
Specialists

MAXAM EQUIPMENT, INC.
6501 E. COMMERCE AVE
Kansas City, Missouri 64120

CUSTOMER

DESCRIPTION
CALIFORNIA
BULK SAMPLER

SHEET NO.	DRAWING NO.	REV.
1 OF 1	CBS-001	0