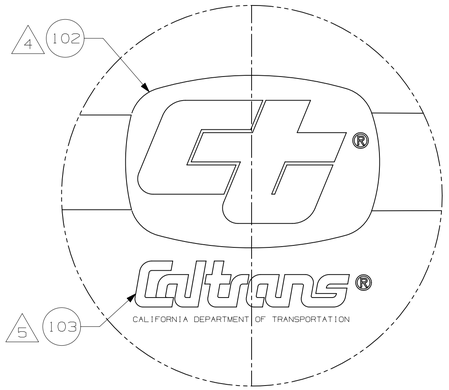

DETAIL A

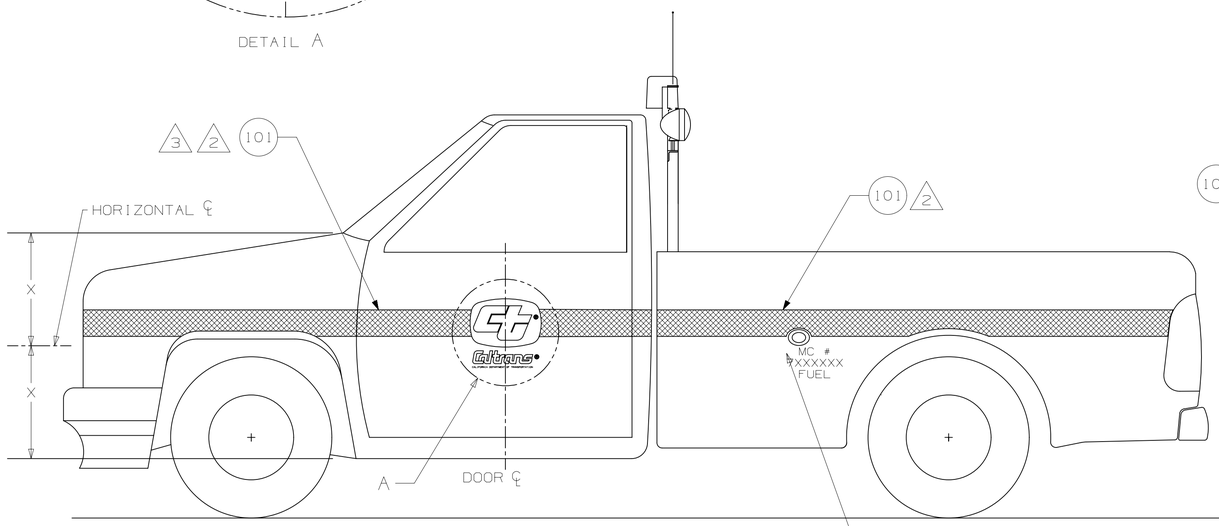

DRIVER SIDE VIEW

PASSENGER SIDE - SAME DECALS

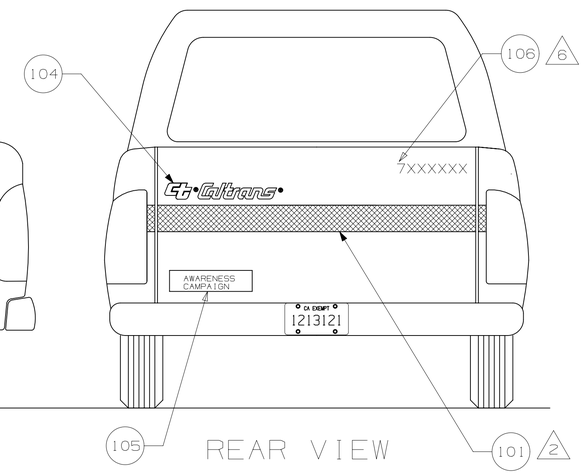

REAR VIEW

BILL OF MATERIALS

	ITEM	QTY	DESCRIPTION	CT DWG # / MF'R #	CT STK #
3 4	101	AS REQ'D	DECAL, REFLECTIVE SHEET, ORANGE, 4" WIDE	MATERIAL PER SPECIFICATION	053-4767
4	102	2	DECAL, 'CT' DOOR, WHITE REFLECTIVE, 9" X 12"	03-D004-01	053-4760
5	103	2	DECAL, 'CALTRANS' BLACK SCRIPT, 2.5"	03-D005-01	053-4763
	104	1	DECAL, 'CT CALTRANS' ORANGE SCRIPT, 4"	03-D014-01	053-4801
	105	1	APPROVED PUBLIC AWARENESS CAMPAIGN BUMPER STICKER	-	*
6 7	106	1	EQ. ID # & MC # DECALS - SPECIAL ORDER	-	053-4892
7	107	1	APPROPRIATE FUEL TYPE DECAL: 'UNLEADED FUEL ONLY' 'E-85 OR GASOLINE'	-	053-1510 053-4990

NOTES:

1 ALL DELINEATION WILL BE IN COMPLIANCE WITH CALTRANS EQUIPMENT QUALITY STANDARDS. GO TO www.dot.ca.gov/hq/eqsc AND CLCK ON THE LINK "EQUIPMENT QUALITY STANDARDS" THEN "FLEET IDENTIFICATION"

2 STRIPING APPLICATION: ALL STICKERS, LABELS AND STRIPING SHALL BE LEVEL, STRAIGHT, BUBBLE-FREE AND DEBRIS-FREE. NO SPLICING OF TAPE OR STRIPING SHALL BE ACCEPTABLE. ALL EDGES ON STRIPING SHALL BE TRIMMED 1/8-3/8 INCH FROM THE EDGES OF DOORS, PANELS, FENDERS, LIGHTS, EMBLEMS, ETC. ORANGE REFLECTIVE SHEETS (ITEM 101) AND STRIPING SHALL BE TRIMMED TO MATCH BODY CONTOURS AND CREASES WHEN IT WILL NOT LAY HORIZONTAL. ANY REFLECTIVE TYPE OF STRIPE OR STICKER SHALL NOT BE PULLED FROM THE VEHICLE AND REAPPLIED DURING APPLICATION, SINCE THE REFLECTIVE MATERIAL WILL BE COMPROMISED.

3 PLACE LOWER EDGE OF ITEM 101 APPROXIMATELY 1/2 WAY BETWEEN THE BOTTOM OF THE WINDOW AND THE BOTTOM OF DOOR. MAKE ADJUSTMENT SLIGHTLY AS REQUIRED TO CLEAR FENDER CUTOUTS AND OTHER FEATURES TO IMPROVE EASE OF INSTALLATION. ITEM 101 POSITION MAY BE ADJUSTED SLIGHTY TO ALIGN WITH BODY STRIPE IF POSSIBLE

4 ITEM 102: LOCATE SUCH THAT THE LOGO IS CENTERED ON THE VERTICAL CENTERLINE OF THE DOOR AND ON THE STRIPE (ITEM 101). STRIPE 101 TO BE TRIMMED TO MATCH EDGES OF ITEM 102

5 ITEM 103 TO BE LOCATED BELOW THE "CT" LOGO AND ALONG THE VERTICAL CENTERLINE OF THE DOOR.

6 SEVEN-DIGIT EQUIPMENT IDENTIFICATION NUMBER (EQ. ID #) ALWAYS STARTS WITH A "7" AND SHALL BE AFFIXED TO THE REAR OF THE VEHICLE IN THE UPPER RIGHT CORNER.

7 THE FOLLOWING DECAL GROUP SHALL BE PLACED DIRECTLY ABOVE OR NEXT TO EACH FUEL FILLER IN ORDER FROM TOP TO BOTTOM: FUEL TYPE, EQ. ID, MC#

REV	DATE	DESCRIPTION	BY
H	June 2015	UPDATE TO DECALS W/HIGH REFLECTIVITY	J Payne
G	July 2014	UPDATE PER 7-18-14 MEMO	J Payne
F	05/09	REMOVE CLEAN AIR DECAL ITEM 105 INSERT 'R' LOGO & ITEM 107, DETAIL VIEWS	ORTEGA
E	12/06	ADDED ITEMS 109 & 110	SPARTZ
D	07/06	CORRECTED NOTES, ID SYMBOLS	SPARTZ
C	09/05	STANDARDIZED LAYOUT, NOTES	SPARTZ
B	11/04	DECAL AND ANNOTATION EDITING	JJ

NEXT ASSEMBLY

TOLERANCE-UNLESS OTHERWISE SPECIFIED
DECIMAL ±
FRACTIONAL ±
ANGULAR ±
DRILLED HOLES +
REAMED HOLES ±

STATE OF CALIFORNIA
DEPARTMENT OF TRANSPORTATION

DIVISION OF EQUIPMENT

MC #: 00400, 00404, 00420, 10404
DELINEATION

SCALE NONE	DATE 30 Apr 02	I-004PU-DE
DRAWN Downin/Payne	DESIGNED CAL	
CHECKED	APPROVED	SHEET 1 OF 1 SHEETS