Status Report No. 1,Retrofit Pilot Program, Caltrans District 7

March 30, 1998
CTSW-RT-98-098

Prepared by:

Robert Bein, William Frost & Associates

Table of Contents

1.0 Introduction 1
1.1 Background and Purpose 1
1.2 Report Organization and Content 1
2.0 BMP Retrofit Pilot Program Siting 3
2.1 Background 3
2.2 Objectives of the Retrofit Pilot Program 5
2.3 Siting Process 5
2.4 Siting Problems and Solutions 6
2.4.1 Trapping Catch Basins 6
2.4.2 Catch Basin Inserts 7
2.4.3 Extended Detention Basins 7
2.4.4 Infiltration Basins 8
2.4.5 Infiltration Trenches 8
2.4.6 Biofilters 9
2.4.7 Media Filters 9
2.4.8 Oil/Water Separator 9
3.0 BMP Pilot Program Siting Costs 10
4.0 Conclusions 10
4.1 Siting 10
5.0 BMP Retrofit Pilot Program Design 11
5.1 Background 11
5.2 Objectives 11
5.3 Design Process 12
5.4 Construction Plans 13
5.5 Basis of Design 13
5.6 Consultation with Experts and Regulatory Agencies on Special Issues 13
5.7 Conclusions 14
6.0 Schedule 14
6.1 Detailed Project Schedule 14

Appendix

Appendix A.1 BMP Pilot Design Information
Appendix A.2 Geotechnical Reports
Appendix A.3 Construction Plans
Appendix A.4 Site Listings
Appendix A.5 Detailed Project Calendar and Staging Plan

Status Report #1
BMP Retrofit Pilot Program
District 7

1.0 Introduction

1.1 Background and Purpose

Periodic status reports and meetings are specified in the District 7 *Scoping Study* as a vehicle to update NRDC on the progress of the BMP Retrofit Pilot Program and receive input as to appropriate changes or modifications to the program. The status meetings have been scheduled on a regular basis to coincide with general project milestones and periods of significant activity. Scheduled dates for the periodic status meetings are given in the *Scoping Study.*

The *Scoping Study* also requires the preparation of status reports for each meeting to provide a background for the meeting discussion. Per agreement with the Plaintiff, the status reports will be prepared two weeks in advance of the status meeting to allow for adequate review time.

The scope of the status reports includes the activities of the program that precede the status meetings. Status reports will include information regarding the Pilot Program siting, design, operation and maintenance program, monitoring reports, program costs and correspondence with special consultants. Each of these topics will be addressed as the information becomes available over the scheduled course of the program. The program Master Schedule is contained in the *Scoping Study.*

1.2 Report Organization and Content

The BMP Retrofit Pilot Program was formally initiated in October 1997. Since that time, siting of the pilot projects has been substantially completed and significant progress has been made in design of the Pilots. Consequently, this status report contains information relative to siting and design of the BMP Retrofit Pilot Program in District 7.

The report is organized into two primary sections and an Appendix. The first section discusses the siting process, the problems encountered during siting of the Pilots and solutions developed for the identified problems. Cost information is also provided for the siting phase of the program.

The second report section provides information relative to the design phase of the program. Currently, design is only partially complete. A complete discussion of the designs, and design assumptions will be provided in a Basis of Design Report to be published per the detailed project design schedule contained in the Appendix.

The Appendix is divided into five sections. Appendix A.1 contains a synopsis of information relative to the design of each Retrofit Pilot Project. The data is formatted as 'information sheets' for each pilot site, and contains the basic design information and design references in support of the construction plans.

Appendix A.2 contains the geotechnical report. A geotechnical evaluation was prepared for each site to provide an assessment as to the suitability of the site for the construction of the selected BMP as well as to screen the site for potential construction problems.

Appendix A.3 contains the construction plans for each pilot project. Some of the construction plans are nearly final where as some remain in the preliminary stage.

Appendix A.4 contains spreadsheets describing the pilot projects. The spreadsheets list each pilot project as well as its location and estimated construction cost (preliminary).

Appendix A.5 contains project schedules. A detailed project schedule is provided indicating significant project dates through the end of the year. The project Staging Plan is also provided in this Appendix, indicating the decision points and criteria to be used to determine whether pilot projects will proceed according to the master project primary or contingency schedule.

2.0 BMP Retrofit Pilot Program Siting

2.1 Background

As a result of litigation between Caltrans and the National Resources Defense Council (NRDC), a Stipulation was reached outlining the development of a Best Management Practice (BMP) Retrofit Pilot Program in Caltrans District 7. The Retrofit Pilot Program includes the design, construction and monitoring of 38 discrete BMP pilot projects. The District 7 Stipulation permits 10 pilot projects, involving six types of best management practices, to be located within Caltrans District 11, San Diego. The types of devices proposed for possible siting of pilot projects pursuant to the Stipulation include trapping catchbasins, drain inlet inserts, biofiltration strips, biofiltration swales, infiltration basins, infiltration trenches, media filters, extended detention basins, and oil/water separators.

The various retrofit pilot projects have been sited so that retrofit options permit observations pertaining to technical feasibility, costs of retrofitting and benefits. Sites were originally selected based on their being common or typical along Caltran's right-of –way, including interchanges, park and rides and maintenance facilities. Each site for a retrofit pilot project has been selected to be appropriate to the type of best management practice to be evaluated and without pre-judgment about the outcome of the associated retrofit pilot study.

Sites have been considered along Caltrans freeways and highways, maintenance stations and park and ride lots within District 7 and selected locations within District 11. The specific retrofit BMPs, and location by Caltrans District per the Stipulation are as shown in Table 1-1.

Table 1-1
Stipulation Proposed Sites

Retrofit Pilot Project	Number of Installations District 7	Number of Installations District 11
Trapping Catch Basin	2	0
Catch Basin Insert	6	0
Extended Detention Basin	2	0
Infiltration Basin	1	2
Infiltration Trench	4	2
Biofiltration Swale	4	2
Biofiltration Strip	2	1
Media Filter	4	2
Oil/Water Separator	3	1
Totals	**28**	**10**

The siting process was scheduled to occur from October 16, 1997 through January 16, 1998. Siting proceeded with field reconnaissance and visits in October 1997 and November 1997, and with the development of individual siting reports in December of 1997 for review by the Plaintiff. The siting process culminated in January 1998 with the publication of the Composite Siting Study (dated January 30, 1998). An update of the Composite Siting Study will be issued to incorporate additional comments received from the Plaintiff, and an additional chapter devoted to the Multi Chambered Treatment Train MCTT) BMP.

Thirty sites have been selected for the 38 projects listed above. Some of the sites contain multiple BMPs (such as the Carlsbad Maintenance Station with an infiltration trench and a biofilter) and some of the BMPs were not sited (3 oil/water separators). Difficulty was encountered in siting the infiltration BMP devices. One infiltration basin and four infiltration trenches were not sited due to lack of locations with suitable infiltration. Three Multi-Chambered Treatment Train (MCTT) and one compost filter were substituted for the unsited infiltration trenches. No substitutions are proposed for the unsited oil/water separator BMPs. The oil/water separator pilots were not sited due to lack of sites with sufficiently high concentrations of free oil and grease in the runoff. A detention basin is proposed to be substituted for the unsited infiltration basin. A complete listing of the BMP Pilot sites in both District 7 and those that were sited in District 11 is contained in the Appendix (A.4).

2.2 *Objectives of the Retrofit Pilot Program*

The pilot projects have been sited to support the overall objectives of the Retrofit Pilot Program which are to:

1. Determine the feasibility of design, construction and maintenance of the selected BMPs;
2. Evaluate the performance of the selected BMPs in removing constituents of concern in highway stormwater runoff; and
3. Evaluate the frequency and magnitude of operational problems associated with maintenance of the structures, including the projected design life of the structure (extrapolated from the operational period) and maintenance and safety concerns specific to transportation facilities and determine solutions to such problems that may be encountered.

The objective of the siting process was to select sites that were suitable for each of the stipulated types of BMPs, and through this process note the issues and constraints with the siting of each type of device.

2.3 *Siting Process*

Specific siting criteria for each BMP is described in detail in the report entitled, *BMP Retrofit Pilot Program, Composite Siting Study, District 7,* dated January 1998. The site selection process involved a multi-disciplinary approach to evaluating potential sites for suitability for the pilot projects. After preliminary reconnaissance, siting was focused initially on the more difficult pilot projects to locate. The first pilot projects to be sited were the oil/water separator projects which required monitoring of oil and grease in stormwater runoff before a final decision on whether or not to construct and operate such pilot projects could be made. Monitoring of four selected locations (three in District 7 and one in District 11) was completed from October 1997 through January 1998. Siting of Oil/Water separator locations was followed by Catch Basin Inserts, Media Filters and Infiltration BMPs. Siting of catch basin inserts required two inlets at a maintenance facility due to the nature of the research program specified in the Stipulation. The infiltration BMPs were difficult to site since they must meet space, safety, distance to existing structures and maintenance access requirements as well as soil infiltration criteria. Media filters require an existing storm drain system. Lastly, Detention Basins, Biofilters and Trapping Catchbasins were sited. Detention basins have most of the criteria associated with infiltration basins relative to space and maintenance access requirements. Biofilters have fewer space and access criteria providing relatively greater opportunities for siting. Trapping catchbasins, unlike all other BMPs are sited in the roadway shoulder and do not require additional space, as do the other BMPs.

By following a tiered approach siting the most difficult BMPs (those with the most stringent criteria) first followed by those that are progressively easier to site, the selected sites received the type of BMP most suited to each location.

Individual siting reports were published for each type of BMP as siting was completed. Nine individual siting reports were published. These individual siting reports were subsequently published as a *Composite Siting Study* (Op. Cit.) which included the associated background information relative to siting criteria and preliminary and detailed geotechnical investigations. The siting process had a nominal duration of 3 months. Refinements to the Siting Study are continuing to ensure a comprehensive documentation of this process.

2.4 Siting Problems and Solutions

Several problems were encountered in siting the various BMPs. A methodical criteria-based approach was used for each type of device. The site selection criteria was used to screen sites for suitability. Siting problems, and the solutions to the problems are discussed for each type of BMP in the following paragraphs.

2.4.1 Trapping Catch Basins

Problems in siting the trapping catch basin Pilot principally involved the nature of the required monitoring program as opposed to the physical constraints of the BMP. The monitoring program required a control system and a test system, each proximate to each other and serving between four and ten drain inlets. Further the drain inlets could not be in median areas where access would be difficult and potentially require lane closures. It was highly desirable for the control and test groups to have the same average daily traffic count and hydrologic characteristics to reduce uncertainties in interpreting the monitoring data. The two trapping catch basin Pilot Projects (each with two locations, a test location and a control location) were located along a single reach of Interstate 210.

In general siting of this BMP would be inappropriate where a lane closure is required for maintenance. The monitoring portion of this program will accurately define the maintenance interval required, however it is not practical to initiate a lane closure for routine maintenance procedures. Consequently, use of this BMP is limited to areas with an adequate shoulder (10 feet) to allow for maintenance. No other solution to this constraint was identified.

2.4.2 Catch Basin Inserts

Catch basin inserts were identified in the Stipulation as a BMP suitable for installation at Caltrans Maintenance facilities. A significant siting problem for inserts was the requirement that the maintenance station to have an existing onsite storm drain system with drain inlets. Many of the Caltrans maintenance facilities do not have an onsite storm drain system but rather drain by sheet and overland flow to adjacent city streets. Consequently, this type of BMP was not appropriate for many of the facilities in District 7. Further, the Stipulation required a comparison of two types of inserts (different manufacturers) at each maintenance station, resulting in the requirement of two drain inlets at the selected facility.

In general siting of this BMP, the primary constraint is the existence of an on-site drainage system.

2.4.3 Extended Detention Basins

Extended detention basins were identified in the Stipulation as appropriately located along Caltrans freeways and highways. Siting problems encountered with this BMP focused on 1) available right-of-way, 2) tributary area and 3) maintenance access. Field review of potential extended detention basin sites in District 7 and District 11 showed existing right-of-way is available for the construction of the pilot detention basins. However, the number of viable sites were limited primarily by the total available area and the area tributary to the site. Extended detention basins typically require about 1 to 2 percent of the tributary area (FHWA, 1996), however this 'rule of thumb' appears to significantly under estimate the space requirements in practical application where space requirements were as high as 50%.

Two issues were responsible for the apparent increase in space requirements as compared to published data. First, many of the sites were located in areas with extremely low relief. The difference in elevation between the basin inlet and outlet was generally very small. This required a relatively shallow detention depth in the basin to avoid a backwater condition on the site storm drain. Secondly, Caltrans requires a 30' clear recovery zone from the edge of traveled way to the basin. The clear recovery zone is a standard design practice when locating horizontal obstructions adjacent to the right-of-way.

Area tributary to the basin site was also a primary limiting criteria. Available right-of-way must also be located in a watershed low point to collect site runoff. Much of the available right-of-way is in locations where site storm drain nor highway runoff is tributary. Maintenance access is also an important criteria. Safe maintenance access from the freeway/highway must be available.

The general siting of this BMP must account for a clear recovery zone when located adjacent to the highway, and must be located in an area where highway runoff is tributary. Since, Caltrans generally does not maintain surplus right-of-way along the mainline portions of roadways, application of this BMP appears to be most suitable in interchanges.

2.4.4 Infiltration Basins

Infiltration basins were identified in the Stipulation as appropriately located along Caltrans freeways and highways. Siting problems encountered with this BMP focused on 1) available right-of-way, 2) tributary area 3) maintenance access and 4) soil infiltration capacity . Field review of potential infiltration basin sites in District 7 and District 11 showed existing right-of-way is available for the construction of the pilot infiltration basins. However, the number of viable sites were limited primarily by the infiltration capacity of soils. Much of the soil in both District 7 and District 11 has varying levels of clay content which are not suitable for an infiltration BMP. Requirements relative to safety setback, right-of-way, and tributary area previously discussed for extended detention basins also apply here. Further, application of this BMP was also excluded where the basin was located within 100 feet of a bridge column or abutment due to structural considerations.

Solutions to the problems noted above, other than incorporating them as siting constraints, were not determined. The lack of suitable soil conditions appears to be the primary constraint associated with siting this BMP. Soils that do not possess adequate drainage result in basin drain times that exceed an acceptable time limit (a maximum of 72 hours).

2.4.5 Infiltration Trenches

Infiltration trenches were identified in the Stipulation as appropriately located in Caltrans Maintenance Yards. The primary siting constraints associated with infiltration trenches were the required 100 foot structural setback and suitable soil infiltration rate. Many Caltrans maintenance facilities are located beneath existing highway bridges. Locating an infiltration device within 100 feet of a bridge column or abutment was a significant constraint that limited the applicability of this BMP. Applicability was further limited by the generally low incidence of soils with a suitable infiltration rate, as discussed for infiltration basins. Infiltration trenches are effective in collecting surface flow and do not require a site storm drain; this characteristic made them more suitable for application at maintenance stations.

There were no solutions identified to the problems described for siting infiltration trenches other than establishing the problems as identified siting constraints. Site

infiltration testing would be a mandatory step due to the heterogeneous nature of the soils throughout each District and within each site.

2.4.6 Biofilters

Biofilters were identified in the Stipulation as appropriately sited at either Caltrans Maintenance Stations or along freeways and highways. The primary siting constraint for biofilters was right-of-way availability. Generally biofilters were found to be not suitable in urban areas where the edge of shoulder was often contained by a sound wall or some other adjacent structure. Biofilters are also generally not suitable in fill situations where a fill slope occurs at or near the edge of shoulder. Questions relative to the requirement for irrigation and the availability of irrigation were also an issue with this BMP.

Solutions were determined for irrigation and maintenance concerns as a part of the siting process. Vegetation that does not require irrigation was specified as well as vegetation that does not require mowing. Mowing adds a significant maintenance expense and if the clippings are left in place, would tend to increase organic nitrogen load to the receiving waters.

2.4.7 Media Filters

Media filters were identified in the Stipulation as appropriately placed at Caltrans Maintenance Stations and Park and Ride lots. The use of media filters requires a site storm drain, a constraint similar to that identified for catch basin inserts. Media filters may be constructed either above or below grade. Many of the maintenance stations and park and ride lots did not have surplus area to construct an above ground filter. This constrain was overcome by constructing a below grade (Delaware) type media filter. Media filters also require about 3 feet of head to operate. Where sufficient head was not available to operate the filter, the site was considered infeasible. Two possible solutions were identified for this constraint. The site storm drain in some cases could be rebuilt to provide additional head at the selected location. The second solution specified a pump at the filter outlet to lift the discharge to the required outlet elevation.

2.4.8 Oil/Water Separator

Oil/water separator units were specified by the Stipulation to be sited at Caltrans Maintenance Stations. Constraints relative to siting of the oil/water separator are similar to those cited for media filters. Applicability of the oil/water separator for the Pilot Program was generally driven by the concentration of free oil and grease in storm water runoff from the maintenance stations. Oil/water separators can reduce the free oil and

grease concentration in storm water to a range from about 10 mg/l to 20 mg/l. Free oil and grease concentrations from the maintenance sites tested ranged from 2 mg/l to 135 mg/l with an average of about 10 mg/l to 15 mg/l. As a result, the applicability of this BMP is most likely limited to specific sites where excessive free oil and grease has been identified as a problem that good housekeeping BMPs can not address.

3.0 BMP Pilot Program Siting Costs

Siting for the Pilot Program was carried out via site reconnaissance of Caltrans facilities, and through a refinement process wherein siting criteria was applied successively for sites suitable for given types of BMPs. Consequently, it is not practical to develop siting costs for individual sites but rather a generalized cost developed through a pro rata basis can be estimated.

Infiltration BMPs require substantially more investigation and siting resources as compared to the other types of BMPs. Site screening for infiltration basins and trenches first must apply criteria relative to space, maintenance and drainage. Next the site must be investigated for a suitable infiltration rate. It is apparent that a site boring must be taken followed by an in-drill hole permeability test to determine soil permeability rates. Laboratory permeability rates were shown to vary by as much as a factor of 100 compared to in-drill hole rates, and soil heterogeneity even within a site is a significant variable.

The average siting cost for non-infiltration BMPs is $ 5,100 per site. The average siting cost of infiltration BMPs is $ 25,300 per site. The total cost for siting of all projects required by the Stipulation and as modified herein was $ 260,300. These costs include Consultant staff time and expenses only.

4.0 Conclusions

4.1 Siting

The siting phase of the Retrofit Pilot Program is complete. A Composite Siting Study has been published and refinements to the text are ongoing. The Composite Siting study will be revised to reflect the final site selections for the Multi-Chambered Treatment Train (MCTT) BMP that was substituted for the unsited infiltration trenches. The Composite Siting Study may also be updated to reflect the final disposition of the un-sited infiltration basin.

No further documentation of the siting process is anticipated. The final report for the BMP Retrofit Pilot Program will include this status report describing the siting process, as well as the Composite Siting Study as an Appendix.

5.0 BMP Retrofit Pilot Program Design

5.1 Background

Design of the pilot projects followed the siting phase. The design phase is scheduled to occur from January 16, 1998 through May 30, 1998. Project bidding and construction will be completed using two different pathways, a procurement system and a standard Caltrans bid-build process. Some of the BMP Pilot Projects are proprietary devices or contain proprietary materials. It is difficult for the State to bid projects with proprietary materials since State procedures require alternate materials and suppliers. To avoid this problem, a direct purchase of these materials and the construction services to install them will be made.

Plans completed under the Caltrans design-bid-build process will be bid through a public process using Caltrans procedures. Projects build using this model (referred to as 'PS&E' for plans, specifications and estimates), require a more formalized plan package. Each of the plan packages, both direct procurement and PS&E will be checked by the local Caltrans District for conformance with State standards and criteria prior to construction.

The Retrofit Pilot Projects were designed using the guidance provided in the document entitled, *Scoping Study, Retrofit Pilot Program, Caltrans District 7* dated January 23, 1998. Further design guidance is referenced to the Caltrans Planning and Design Staff Guide, dated September 1997.

5.2 Objectives

The objectives of the design process are to develop plans, specifications and estimates packages for the Retrofit Pilot Projects using Caltrans design practices and design guidance manuals while maintaining state-of-the-art design practices. State-of-the-art design practices includes using the most recent published guidance on the design of structural BMPs. One of the objectives of the Scoping Study was to define the design references to be used for the Retrofit projects. The literature consulted in the development of the design guidance for the Retrofit projects is contained in the Scoping Study Bibliography. The primary design references used are the *Caltrans Planning and Design Staff Guide,* the FHWA publication, *Evaluation and Management of Highway Runoff Water Quality,* and several design guidance manuals from the City of Austin, Texas, City of Portland, Oregon, King County, Washington, Washington State Department of Transportation and the Denver Urban Drainage and Flood Control District.

5.3 Design Process

Design (PS&E and procurement) packages have been completed and submitted for review for all of the projects in District 11. A portion of the projects (PS&E) have been completed in District 7. The projects indicated on the project site listings located in the Appendix (A.4) as 'procurement' in District 7 remain a work-in-progress. These plan packages will be available on 4/22/98 and 4/29/98. Some of the plan packages for District 11 and District 7 PS &E are provided in the Appendix (A.3) for information. The submittal and review schedule for each of the plan packages is provided in the Appendix (A.5).

The design process completed to date included several phases. The initial phase consisted of obtaining topographic information for each site. Topographic information was compiled using site survey techniques. Topographic information was also obtained using aerial photography where this approach was cost-justified. Site topography was collected in digital format and used as base design information. All design is being completed in CADD using a Microstation Intergraph System.

Following compilation of the topographic base information to CADD format, hydrology studies were completed to compute both water quality and design storm discharges for the subject storm drain systems. Development of the PS & E package includes the following elements:

- Standard plans list
- Construction staking and survey information
- Contour grading and drainage plan
- Drainage profiles, details and quantities
- Traffic handling plan
- Miscellaneous quantities
- Drainage cross sections

Specifications and an Engineer's Estimate are also a part of the PS&E package. The Engineer's Estimate is completed based on Caltrans Cost Data and the quantities estimated from the construction drawings. Specialty items not in the Caltrans Cost data base are priced using manufacturer's information and construction cost data from other projects.

5.4 Construction Plans

The construction plans completed to date are included in the Appendix (A.3) for information. The plans have defined approval process that must be maintained to ensure that the subsequent bid and construction schedules are met. The review dates are given in the Appendix (A.5).

The plans will be revised as appropriate to reflect review comments received from Caltrans and the Plaintiff. Once the plans have been approved by the District, they will be signed by the Engineer and forwarded to Caltrans Headquarters for finalization of the bid package and the bid listing process for formal solicitation of construction bids. Once plans have been bid, changes to the plans must be made through an addendum process which can be cumbersome. Once a final bidder is selected, further changes if necessary must be made through a change order process. Plans may not be changed without the approval of the Engineer of Record.

5.5 Basis of Design

Basis of Design Reports will be completed for each Pilot project following approval of the plans. This will be a documentation process whereby the design guidance, assumptions and exceptions to standard criteria or design will be noted. Outlines of these basis of design reports have been prepared and are provided in the Appendix (A.1). The design basis outlines provide most of the information that will be used to develop the Basis of Design Reports. Changes may be required to this information as the Pilot projects move through and complete the design phase. These changes, as appropriate, will be made when the information is incorporated into the Basis of Design Reports. The Basis of Design Reports will be submitted to the Plaintiff in a staged fashion during the month of June. The formal submittal dates are identified on the project calendar given in the Appendix (A.5).

5.6 Consultation with Experts and Regulatory Agencies on Special Issues

Vector and mosquito control have emerged as significant issues relative to the design and operation of the Pilot Projects. An expert in the field of mosquito and vector control (Dr. Bill Walton) has been retained to advise Caltrans on control and abatement issues. Dr. Walton has provided input relative to design of the pilots to minimize mosquito problems and abatement requirements. Some of Dr. Walton's suggestions for the design phase of the project include:

- Limit growth of aquatic plants and standing water. Concrete lining may be used for detention basins.

- Maintain the width of ponds to a maximum of 100' to allow for the application of abatement practices such as bacteria and insect growth regulators (IGRs).

A meeting has been scheduled (April 1, 1998) with the regional vector control districts to discuss issues relative to vector control and abatement. The Plaintiff is invited to attend this meeting to participate in the discussion.

5.7 Conclusions

The design process is about 50% complete. Procurement projects are staged to be finalized about 1 month behind PS&E packages. Significant further information will be obtained as the design packages move through the plan check process.

6.0 Schedule

6.1 Detailed Project Schedule

Caltrans has agreed to provide a detailed project schedule to be published as a part of each status meeting. The detailed project schedule will incorporate significant dates from both the BMP Retrofit Pilot Program as well as other projects that also require the Plaintiff's participation. The detailed project schedule will have a 3-month window where dates may be assumed to be accurate, although revisions may be put forth due to unforeseen circumstances. Dates for subsequent quarters will also be projected beyond the 3-month window for information. The dates indicated beyond the 3-month window are understood to be less certain, and subject to reassessment when the schedule is published at each status meeting. In general, the calendar notes major decision points, deliverables to the Plaintiff, internal project deadlines that drive major decision points and dates for requested responses from the Plaintiff.

The detailed project schedule includes dates for the following events associated with the Retrofit Pilot Program:

- Preparation of the Basis of Design Reports
- Construction Status Reports
- Operation and Maintenance Plan
- Operation Status Reports

The detailed project schedule is contained in the Appendix (A.5). *Project Staging Plan*

A plan has been developed to define the decision points and the criteria to be applied at the decision points to determine how the Pilot projects are staged between the primary and contingency schedule. The purpose of the staging plan is to recognize that technical or construction issues may arise during the program that would require a delay in a Pilot project. Three 'decision points' have been identified where Pilot projects may be shifted from the primary schedule to the contingency schedule. The three decision points are:

- June 10, 1998, Post Design, Preconstruction
- November 18, 1998, Pre-monitoring
- June 1, 1999, End of first year monitoring

The decision points are shown on the detailed schedule. The criteria to be applied at each decision point is defined in the project staging plan included in the Appendix (A.5).

Appendix

Appendix A.1
BMP Pilot Project Design Information

Retrofit Pilot Program
District 7 Sites

3/2/98

PROJECT	CONSULTANT	DESCRIPTION	LOCATION	CONSTRUCTION COST (Caltrans PS&E)	CONSTRUCTION COST (Procurement)
1	MW	**Trapping Catchbasins and Infiltration Basin**			
PS&E		Site 1: Trapping Catchbasins	I-210 E&W, west of Orcas Ave.	320,000	
			I-210 W, east of Orcas Ave.		
		Site 2: Trapping Catchbasins	I-210 E&W, east of Filmore St.	320,000	
			I-210 E&W, east of Van Nuys Blvd.		
		Site 3: Infiltration Basin	I-605 NB/SR 91 WB Connector	355,000	
			PROJECT 1 SUBTOTALS	**995,000**	
2	B&C	**Extended Detention Basins**			
PS&E		Site 1: Extended Detention Basin	I-5/I-605 Interchange, between I-5 SB and	282,000	
			I-5 SB/I-605 SB connector ramps		
		Site 2: Extended Detention Basin	I-605/SR 91 Interchange, between I-605 SB and	282,000	
			SR 91EB /I-605 SB connector ramp		
			PROJECT 2 SUBTOTALS	**564,000**	
3	MW	**Infiltration Trench, Biofilters, and Catchbasin Inserts**			
Procurement		Site 1: Infiltration Trench	Altadena Maintenance Station		50,000
		Site 2: Biofiltration Strip	Altadena Maintenance Station		105,000
		Site 3: Biofiltration Strip	I-605 NB, south of SR 91 WB Connector		105,000
		Site 4: Biofiltration Swale	Cerritos Maintenance Station		75,000
		Site 5: Biofiltration Swale	I-605 NB/SR 91 WB Connector		75,000
		Site 6: Biofiltration Swale	I-5 SB/I-605 SB Onramp		75,000
		Site 7: Biofiltration Swale	I-605 SB between Carson St. and Del Amo Blvd.		75,000
		Site 8: Catchbasin Inserts	Foothill Maintenance Station		7,500
		Site 9: Catchbasin Inserts	Las Flores Maintenance Station		7,500
		Site 10: Catchbasin Inserts	Rosemead Maintenance Station		7,500
			PROJECT 3 SUBTOTALS		**582,500**
4	B&C	**Media Filters,Oil/Water Separator, MCTTs**			
Procurement		Site 1: Media Filter	Eastern Regional Maintenance Station		150,000
		Site 2: Media Filter	Foothill Maintenance Station		150,000
		Site 3: Media Filter	Termination Park & Ride (I-105/I-605 Interchange)		150,000
		Site 4: Media Filter	Paxton Park & Ride (I-210/SR118)		150,000
		Site 5: Oil/Water Separator	Alameda Maintenance Station		75,000
		Site 6: MCTT	Lakewood Park & Ride (I-5 & Lakewood)		85,000
		Site 7: MCTT	Metro Maintenance Station		85,000
		Site 8: MCTT	Via Verde Park & Ride (I-210 & Via Verde)		85,000
			PROJECT 4 SUBTOTALS		**930,000**
			TOTAL	**1,559,000**	**1,512,500**

Retrofit Pilot Program
District 11 Sites

3/11/98

PACKAGE No. (Design)	PROJECT No. (District 11 Program)	District 7 Stipulation Site	DESCRIPTION	LOCATION	CONSTRUCTION COST (PS&E - Package 1)	CONSTRUCTION COST (Procurement - Package 2)
	1		**Extended Detention Basins and Biofilter**			
1			Site 1: Extended Detention Basin	I-15/SR78 Interchange	282,000	
1			Site 2: Extended Detention Basin	I-5 NB at Manchester Avenue	282,000	
2		X	Site 3: Biofiltration Swale	I-5 SB at Palomar Airport Road		75,000
	2		**Infiltration Trench and Biofilters**			
2		X	Site 1: Infiltration Trench	Carlsbad Maintenance Station		50,000
2		X	Site 2: Biofiltration Strip	Carlsbad Maintenance Station		105,000
2		X	Site 3: Biofiltration Swale	SR 78 EB at Melrose Place		75,000
	3		**Extended Detention/Infiltration Basins**			
1			Site 1: Extended Detention Basin	I-5/SR 56	282,000	
1		X	Site 2: Infiltration Basin	I-5 SB at La Costa Blvd.	355,000	
	4		**Wet Basin**			
1			Site 1: Wet Basin	I-5 SB at Manchester Avenue	355,000	
	5		**Media Filters**			
2		X	Site 1: Media Sand Filter	Escondido Maintenance Station		150,000
2		X	Site 2: Media Sand Filter	I-5 SB/SR 78 Park & Ride		150,000
2			Site 3: Media Sand Filter	I-5 NB at La Costa Blvd. Park & Ride		150,000
2			Site 4: Compost Filter	Kearny Mesa Maintenance Station		200,000
				TOTAL PACKAGE COST	**1,556,000**	**955,000**

BMP Retrofit Pilot Program
Pilot Project Design Information Summary
District 7, Package 1

General

Site No. :	1
Project Location:	I-210 Eastbound and Westbound shoulders, approx. 850 ft west of Orcas Ave.
Project Type :	Trapping Catch Basin - Control
Design References :	Scoping Study, Planning and Design Staff Guide
General Description :	This control site includes runoff collected from 2 drain inlets located along the Westbound I-210 shoulder and 2 drain inlets located along the Eastbound I-210 shoulder.

Design Data

Water Quality Discharge :	3.2 cfs peak flow
Tributary Area :	4,386 square meters (1.1 acres)
Design Rainfall or Volume :	25 year storm
Design Average Detention Time :	N/A
Design Average Residence Time :	N/A

Design Discussion

a) Site constraints/special problems

Electricity can not be obtained from freeway electrical wiring, and there are no nearby power sources. Therefore power will be provided by batteries. Maintenance pullout area requires Type 1 retaining wall.

b) Exceptions to standard criteria

None

c) Major design assumptions

20 pipe diameters of straight pipe is used upstream of Palmer-Bowlus flume to establish normal flow. 5 pipe diameters of straight pipe is used downstream of flume to prevent backwater conditions. Emergency overflow weir is provided in junction structure to avoid possible freeway flooding. All samples taken will be refrigerated at 4 degrees centigrade using ice.

BMP Retrofit Pilot Program
Pilot Project Design Information Summary
District 7, Package 1

General

Site No. :	1a
Project Location:	I-210 Westbound shoulder, approx. 150 ft east of Orcas Ave.
Project Type :	Trapping Catch Basin - Retrofit
Design References :	Scoping Study, Planning and Design Staff Guide, City of Portland DPW Standard Plan 4-32-5
General Description :	This retrofit site includes runoff collected from 4 drain inlets located along the Westbound I-210 shoulder.

Design Data

Water Quality Discharge :	8.8 cfs peak flow
Tributary Area :	13,806 square meters (3.4 acres)
Design Rainfall or Volume :	25 year storm
Design Average Detention Time :	N/A
Design Average Residence Time :	N/A

Design Discussion

a) Site constraints/special problems

The drain inlets are located against a soundwall which can not be removed/altered. Therefore, monitoring will be accomplished at the bottom of the slope and access will occur from Orcas Ave. The downslope monitoring area requires a retaining wall.

b) Exceptions to standard criteria

Ladders will be used for access in lieu of step rings.

c) Major design assumptions

A standard Caltrans G1 inlet will be modified to accomodate the TCB. Each TCB is discharged to a common collector pipe to prevent upstream basin from obstructing stormwater flow. The depth of the permanent pool will be 1.2 m. 20 pipe diameters of straight pipe is used upstream of Palmer-Bowlus flume to establish normal flow. 5 pipe diameters of straight pipe is used downstream of flume to prevent backwater conditions. Emergency overflow weir is provided in junction structure to avoid possible freeway flooding. All samples taken will be refrigerated at 4 degrees centigrade using refrigerated samplers and electric power from a nearby utility pole.

BMP Retrofit Pilot Program
Pilot Project Design Information Summary
District 7, Package 1

General

Site No. :	2
Project Location:	I-210 Eastbound and Westbound shoulders, east of Filmore Street.
Project Type :	Trapping Catch Basin - Control
Design References :	Scoping Study, Planning and Design Staff Guide
General Description :	This control site includes runoff collected from 5 drain inlets located along the Westbound I-210 shoulder, 1 drain inlet located along the Eastbound I-210 shoulder, and 1 drain inlet located on the median between the Eastbound SR-118 / Eastbound I-210 connector and the Eastbound I-210.

Design Data

Water Quality Discharge :	7.4 cfs peak flow
Tributary Area :	10,200 square meters (2.5 acres)
Design Rainfall or Volume :	25 year storm
Design Average Detention Time :	N/A
Design Average Residence Time :	N/A

Design Discussion

a) Site constraints/special problems

This site was initially selected to be the retrofit site, but it is being proposed as the control site due to the drain inlet located on the median between the Eastbound SR 118 / Eastbound I-210 connector and the Eastbound I-210. Electricity can not be obtained from freeway electrical wiring, and there are no nearby power sources. Therefore power will be provided by batteries. Maintenance pullout area requires Type 1 retaining wall.

b) Exceptions to standard criteria

None

c) Major design assumptions

20 pipe diameters of straight pipe is used upstream of Palmer-Bowlus flume to establish normal flow. 5 pipe diameters of straight pipe is used downstream of flume to prevent backwater conditions. Emergency overflow weir is provided in junction structure to avoid possible freeway flooding. All samples taken will be refrigerated at 4 degrees centigrade using ice.

BMP Retrofit Pilot Program
Pilot Project Design Information Summary
District 7, Package 1

General

Site No. :	2a
Project Location:	I-210 Eastbound and Westbound shoulders, east of Van Nuys Blvd.
Project Type :	Trapping Catch Basin - Retrofit
Design References :	Scoping Study, Planning and Design Staff Guide, City of Portland DPW Standard Plan 4-32-5
General Description :	This retrofit site includes 3 drain inlets located along the Westbound I-210 shoulder, 4 drain inlets located along the Eastbound I-210 shoulder, and 1 non-freeway runoff inlet located in a ditch section to the east of the I-210.

Design Data

Water Quality Discharge :	10.8 cfs peak flow
Tributary Area :	14,834 square meters (3.7 acres)
Design Rainfall or Volume :	25 year storm
Design Average Detention Time :	N/A
Design Average Residence Time :	N/A

Design Discussion

a) Site constraints/special problems

This site was initially selected to be the control site due to the non-grate inlet, but it is being proposed as the control site due to the conditions at Site 3. Electricity can not be obtained from freeway electrical wiring, and there are no nearby power sources. Therefore power will be provided by batteries. Maintenance pullout area requires Type 1 retaining wall.

b) Exceptions to standard criteria

Ladders will be used for access in lieu of step rings.

c) Major design assumptions

A standard Caltrans G1 inlet will be modified to accomodate the TCB. Each TCB is discharged to a common collector pipe to prevent upstream basin from obstructing stormwater flow. The depth of the permanent pool will be 1.2 m. 20 pipe diameters of straight pipe is used upstream of Palmer-Bowlus flume to establish normal flow. 5 pipe diameters of straight pipe is used downstream of flume to prevent backwater conditions. Emergency overflow weir is provided in junction structure to avoid possible freeway flooding. All samples taken will be refrigerated at 4 degrees centigrade using ice.

BMP Retrofit Pilot Program
Pilot Project Design Information Summary
District 7, Package 1

General

Site No. :	3
Project Location:	Cloverleaf connector between Northbound I-605 and Westbound SR-91.
Project Type :	Infiltration Basin
Design References :	Scoping Study, Caltrans Planning and Design Staff Guide, FHWA Evaluation and Management of Highway Runoff Water Quality.
General Description :	The Infiltration basin is located within a cloverleaf connector and receives runoff from 4 point sources and the interior of the cloverleaf. The majority of the runoff is from impervious areas, with 10% being pre-treated by a proposed Biofiltration Swale.

Design Data

Water Quality Discharge :	11.2 cfs peak flow for design 25 year storm
Tributary Area :	19,137 square meters (4.7 acres)
Basin Volume :	313 cubic meters
Maximum Drain Time :	42 hours
Design Average Residence Time :	N/A

Design Discussion

a) Site constraints/special problems

Occasionally flooding to a depth of 0.1 m may occur in the Cerritos Maintenance Station during a design 25 year, 24 hour storm. However, as a result of this project, the general drainage will be substantially improved and the occasional flooding will be of short duration. Insufficient differences in elevation is available to adequately drain this area. The ability to measure depth of sediment deposits in the basin will be difficult. Electricity can not be obtained from freeway electrical wiring, and there are no nearby power sources. Therefore power for the bubblers will be provided by batteries.

b) Exceptions to standard criteria

An off-line basin in this location will require some type of mechanical gate to control flows. To avoid the need for such equipment, the basin has been designed to receive the design water quality runoff volume, continue to fill, and then recede to a predetermined water elevation from which drop in water levels may be measured.

c) Major design assumptions

Of the 4 point source inlets, the flow from two of them are being diverted to the basin. The outlet pipe (F.L. 98.84 m) is expected to flow at full hydraulic capacity. The basin will capture the first 12 mm of runoff.

General – Project 2, Brown and Caldwell, Site 1

Project Location: District 7, adjacent to Southbound I-5 at southbound I-605.

Project Type: Extended Detention basin

Design References: Project Scoping Study; Evaluation and Management of highway Runoff Water Quality *(Federal Highway Administration, June 1996)*

General Description: The pilot BMP is an in-line extended detention basin with a tributary area that contains freeway roadway areas, cloverleaf areas, and local streets. Flow is diverted to the basin from an existing box culvert entering to site. Outlet from the basin consists of a perforated riser pipe and large storm overflow. Basin depth is 4 feet. Emergency spillway is provided at the diversion structure. Pipe discharges into and out of the basin is protected from erosion by riprap.

Storm water samples will be taken and flow measured using automated equipment at both the basin inlet and outlet. Access is provided to the basin monitoring points by a paved road for wet weather use. Gently sloping sides of the embankment provide maintenance access around the basin. The basin side slopes are stabilized with the seed mix identified in the specifications. The basin has a length to width ratio of 3.5:1.

Design Data

Water Quality Discharge: Average discharge rate for full basin (3 feet depth) is 37 gpm.

Tributary Area: 6.8 acres.

Design Rainfall or Volume: The 1-year 24 hour design storm (1") yields a volume of 12900 cubic feet.

Design Average Detention Time or Residence Time: Basin is designed to discharge a full basin (3 feet) in 72 hours.

Design Discussion

a) Site constraints/special problems and considerations. Site is adjacent to freeway to a 30 foot setback was maintained. Very small elevation differential between inlet pipe to site and outlet pipe required the depth of the basin to be small and will result is some backwater in the inlet pipe during high flows. Flow from a second culvert feeding the site had to be excluded from the basin because the invert entering the site was very close to the invert leaving the site, making depth in a detention basin impossible without pumping. Existing site is unpaved, therefore paved road was needed to allow access during storms.

b) Exceptions to standard criteria. Pond depth is slightly less than the 4 to 6 feet in the scoping study due to the hydraulic constraints of the site.

c) Major design assumptions. Detention basin is actually offline with the flow of the water entering the site being diverted up to 4 feet of depth, but acts much like an inline basin. An emergency overflow weir is provided at the diversion box at the existing culvert, so that the basin embankment will not be overtopped. The overflow weir allowing most of the water to flow through the basin providing partial treatment of all but the largest storms.

General - Project 2, Brown and Caldwell, Site 2

Project Location: District 7, adjacent to Southbound I-605 at eastbound SR 91

Project Type: Detention basin

Design References: Project Scoping Study; Evaluation and Management of highway Runoff Water Quality *(Federal Highway Administration, June 1996)*

General Description: The pilot BMP is an in-line extended detention basin with a tributary area that contains exclusively freeway roadway areas. Flow is directed to the basin from two 12-inch diameter freeway downdrains. Outlet from the basin consists of a perforated riser pipe and overflow for large storms. Basin depth is 4 feet maximum. Emergency spillway is provided in basin embankment. Pipe discharges into and out of the basin are protected from erosion by riprap.

Storm water samples will be taken and flow measured using automated equipment at both the basin inlet and outlet. Access is provided to the basin monitoring points by a paved road for wet weather use. Gently sloping sides of the embankment provide maintenance access around the basin. The basin side slopes are stabilized with the seed mix identified in the specifications. The basin has a length to width ratio of 5:1.

Design Data

Water Quality Discharge: Average discharge rate for full basin (3 feet depth) is 8 gpm.

Tributary Area: 0.8 acres.

Design Rainfall or Volume: The 1-year 24 hour design storm (1") yields a water volume of 2500 cubic feet.

Design Average Detention Time or Residence Time: Basin is designed to discharge a full basin (3 feet) in 72 hours.

Design Discussion

a) Site constraints/special problems and considerations. Site is adjacent to freeway to a 30 foot setback was maintained. The small tributary area required the depth of the basin to be small to maintain the required side slopes and other criteria. Existing site is unpaved, therefore paved road was needed to allow access during storms. Access to the site is from Artesia Blvd.

b) Exceptions to standard criteria. Pond depth is slightly less than the 4 to 6 feet in the scoping study due to the hydraulic constraints of the site.

c) Major design assumptions. Detention basin is online allowing most of the water to flow through the basin. An emergency overflow weir is provided at the diversion box at the existing culvert, so that the basin embankment will not be overtopped. Inline will allow partial treatment of all largest storms. The steep slopes of the tributary pipes do not allow for flow diversion outside of the basin.

General – Project 4, Brown and Caldwell, Site 1

Project Location: Eastern Regional Maintenance Station, on Workman Road near the SR 60/ I605 interchange.

Project Type: Media Filter

Design References: Scoping Study; City of Austin design guidelines

General Description: The pilot is a sand filter with water quality volume. Flow is collected in a drain inlet from a portion of the paved Caltrans maintenance yard. It is directed to a sediment chamber from where it flows into a sand filter. An underdrain collects the filter water and discharges it to a sump from where it is pumped to the existing discharge location. An overflow is provided from the sediment chamber to bypass flow when the storage volume has been filled. The sediment chamber and filter areas are not covered to allow regular maintenance. Access is provided around the unit for maintenance.

Flow will be measured and water quality samples taken at both the inlet to the sediment chamber and the outlet to the filter. The structure will be constructed of cast-in-place concrete. The sand gradation will be as specified.

Design Data

Water Quality Discharge: Flow rate from the filter will be about 0.8 cfm.

Tributary Area: 1.45 acres.

Design Rainfall or Volume: The 1-year 24 hour design storm (1") yields a water volume of 2500 cubic feet.

Design Average Detention Time or Residence Time: Filter is designed to treat the water quality volume in 24 hours.

Design Discussion

a) Site constraints/special problems and considerations. Limited head requires pumping of treated stormwater, which in turn necessitates more complicated electrical system. The Austin design, as described in the Scoping Study, has storage capacity for the entire water quality volume, which requires increased depth to maintain a surface area reasonable for the site. Site frequented by various people requires fencing to discourage theft and vandalism. Location of the filter is chosen to match the existing drainage pattern of the station.

b) Exceptions to standard criteria. None.

c) Major design assumptions. System is designed around the Austin filter design due to the larger tributary area.

General – Project 4, Brown and Caldwell, Site 2

Project Location: Foothill Maintenance Station, on Mountain Avenue north of I-210.

Project Type: Media Filter

Design References: Scoping Study; City of Austin design guidelines

General Description: The pilot is a sand filter with water quality volume. Flow is collected in an existing drain inlet from a portion of the paved Caltrans maintenance yard. It is directed to a sediment chamber from where it flows into a sand filter. An underdrain collects the filter water and discharges it to a sump from where it is pumped to the existing discharge location. An overflow is provided from the sediment chamber to bypass flow when the storage volume has been filled. The sediment chamber and filter areas are not covered to allow regular maintenance. Access is provided around the unit for maintenance.

Flow will be measured and water quality samples taken at both the inlet to the sediment chamber and the outlet to the filter. The structure will be constructed of cast-in-place concrete. The sand gradation will be as specified.

Design Data

Water Quality Discharge: Flow rate from the filter will be about 2 cfm.

Tributary Area: 4.1 acres.

Design Rainfall or Volume: The 1-year 24 hour design storm (1") yields a water volume of 17,900 cubic feet.

Design Average Detention Time or Residence Time: Filter is designed to treat the water quality volume in 24 hours.

Design Discussion

a) Site constraints/special problems and considerations. Limited head requires pumping of treated stormwater, which in turn necessitates more complicated electrical system. The Austin design, as described in the Scoping Study, has storage capacity for the entire water quality volume, which requires increased depth to maintain a surface area reasonable for the site. Site frequented by various people requires fencing to discourage theft and vandalism. Location of the filter is chosen to match the existing drainage pattern of the station.

b) Exceptions to standard criteria. None.

c) Major design assumptions. System is designed around the Austin filter design due to the larger tributary area.

General – Project 4, Brown and Caldwell, Site 3

Project Location: Termination Park and Ride near the I-105/I-605 interchange.

Project Type: Media Filter

Design References: Scoping Study; City of Austin design guidelines

General Description: The pilot is a sand filter with water quality volume. Flow is collected in an existing drain inlet from a portion of the parking facility (about 30%) at the south end of the facility. It is directed to a sediment chamber from where it flows into a sand filter. An underdrain collects the filter water and discharges it to a sump from where it is pumped to the existing discharge location. An overflow is provided from the sediment chamber to bypass flow when the storage volume has been filled. The sediment chamber and filter areas are not covered to allow regular maintenance. Access is provided around the unit for maintenance.

Flow will be measured and water quality samples taken at both the inlet to the sediment chamber and the outlet to the filter. The structure will be constructed of cast-in-place concrete. The sand gradation will be as specified.

Design Data

Water Quality Discharge: Flow rate from the filter will be about 2 cfm.

Tributary Area: 4.1 acres.

Design Rainfall or Volume: The 1-year 24 hour design storm (1") yields a water volume of 17,900 cubic feet.

Design Average Detention Time or Residence Time: Filter is designed to treat the water quality volume in 24 hours.

Design Discussion

a) Site constraints/special problems and considerations. Limited head requires pumping of treated stormwater, which in turn necessitates more complicated electrical system. The Austin design, as described in the Scoping Study, has storage capacity for the entire water quality volume, which requires increased depth to maintain a surface area reasonable for the site. Site frequented by various people requires fencing to discourage theft and vandalism. Location of the filter is chosen to match the existing drainage pattern of the station. Parking is of high demand at this location, so space utilized was minimized. About 18 parking spaces will be taken for the facility.

b) Exceptions to standard criteria. None.

c) Major design assumptions. System is designed around the Austin filter design due to the larger tributary area.

General – Project 4, Brown and Caldwell, Site 4

Project Location: Paxton Park and Ride near the I-210/SR 118 interchange.

Project Type: Media Filter

Design References: Scoping Study; City of Austin design guidelines

General Description: The pilot is a sand filter with water quality volume. Flow is collected in a new trench drains and directed to a collection box. Most of the site is contained. Flow is then directed to a sediment chamber from where it flows into a sand filter. An underdrain collects the filter water and discharges it to a sump from where it is pumped to the existing drain inlet. An overflow is provided from the sediment chamber to bypass flow when the storage volume has been filled. The sediment chamber and filter areas are not covered to allow regular maintenance. Access is provided around the unit for maintenance.

Flow will be measured and water quality samples taken at both the inlet to the sediment chamber and the outlet to the filter. The structure will be constructed of cast-in-place concrete. The sand gradation will be as specified.

Design Data

Water Quality Discharge: Flow rate from the filter will be about 0.7 cfm.

Tributary Area: 1.34 acres.

Design Rainfall or Volume: The 1-year 24 hour design storm (1") yields a water volume of 3800 cubic feet.

Design Average Detention Time or Residence Time: Filter is designed to treat the water quality volume in 24 hours.

Design Discussion

a) Site constraints/special problems and considerations. Limited head requires pumping of treated stormwater, which in turn necessitates more complicated electrical system. The Austin design, as described in the Scoping Study, has storage capacity for the entire water quality volume, which requires increased depth to maintain a surface area reasonable for the site. Site frequented by various people requires fencing to discourage theft and vandalism. Location of the filter is chosen to match the existing drainage pattern of the station. Parking is of high demand at this location, so space utilized was minimized. About 18 parking spaces will be taken for the facility.

b) Exceptions to standard criteria. None.

c) Major design assumptions. System is designed around the Austin filter design due to the larger tributary area.

General – Project 4, Brown and Caldwell, Site 5

Project Location: Alameda Maintenance Station, on Mountain Avenue north of I-210.

Project Type: Oil-Water Separator

Design References: Scoping Study; vendor catalogs

General Description: The pilot is an underground oil-water separator consisting of an sedimentation area and a coalescing plate unit to assist in the removal of oil. These will be housed in a cathodically protected steel cylindrical underground tank. Trench drains will be installed to collect flow from a portion of the maintenance yard, including in front of the maintenance bays. Flow will be channeled to a drain inlet from when it will flow to the oil-water separator. Access manholes will be the only access to the inside of the separator. The sediment chamber and filter areas are not covered to allow regular maintenance. Access is provided around the unit for maintenance.

Flow will be measured and water quality samples taken at both the inlet and the outlet of the oil-water separator. A fence will be provided around the sampling and monitoring equipment.

Design Data

Water Quality Discharge: Peak flow rate is estimated be about 500 gpm.

Tributary Area: 0.75 acres

Design Rainfall or Volume: The 1-year 24 hour design storm is used for design calculations.

Design Average Detention Time or Residence Time: Not applicable criteria. Units are sized by the manufacturer to achieve oil removal.

Design Discussion

a) Site constraints/special problems and considerations. Site frequented by various people requires fencing to discourage theft and vandalism. Location of the oil-water separator is chosen to match the existing drainage pattern of the station.

b) Exceptions to standard criteria. None.

c) Major design assumptions. System is designed around commercially available units specially designed by the manufacturer for underground installation.

Appendix A.2
Geotechnical Information

THE L·K·R GROUP

CONSULTING GEOTECHNICAL ENGINEERS

GEOTECHNICAL ENGINEERING SERVICES
LKR Project No. 97-1019C
March 20, 1998

REVISED
PRE-CONSTRUCTION GEOTECHNICAL EVALUATION REPORT

Caltrans Storm Water Runoff Study
Retrofit Facilities, District 7,
Los Angeles County
California

Prepared for:

Robert Bein, William Frost and Associates
14725 Alton Parkway
Irvine, CA 92618-2069

Prepared By:

The L.K.R. Group, Inc.
2341 W. 205th Street
Suite 103
Torrance, CA 90501

THE L·K·R GROUP
CONSULTING GEOTECHNICAL ENGINEERS

ROBERT BEIN, WILLIAM FROST AND ASSOCIATES
14725 Alton Parkway
Irvine, CA 92618-2069

March 20, 1998
97-1019C

Attention: Mr. Scott Taylor

Subject: **GEOTECHNICAL PRE-CONSTRUCTION REPORT**
Caltrans Storm Water Runoff Retrofit Study
Los Angeles County, California

Mr. Taylor:

The L.K.R. Group, Inc. (LKR) is herewith submitting this pre-construction Geotechnical Evaluation Report for the subject sites. The authorized scope of services included site reconnaissance, evaluation of any geotechnical constraints that could inhibit construction or change the design of the proposed devices, engineering and geological analysis, plus the preparation of this report. This report includes site descriptions and general conclusions and recommendations to help assist in the design and bidding process of the storm water retrofit facilities.

We appreciate the opportunity to provide geotechnical services for this project. If you have any questions pertaining to this report, or if we can be of further service, please do not hesitate to contact The LKR Group.

Respectfully submitted,
THE L.K.R. GROUP, INC.

REGISTERED PROFESSIONAL ENGINEER
MICHAEL DAVID READER
No. GE2259
Exp. 3-31-02
GEOTECHNICAL
STATE OF CALIFORNIA

Michael D. Reader, RCE 44918, GE 2259
President, Project Manager

Steven H. Kolthoff CEG 1965
Project Geologist

REGISTERED GEOLOGIST
STEVEN HARM KOLTHOFF
NO. 1965
CERTIFIED ENGINEERING GEOLOGIST
STATE OF CALIFORNIA

sk\project\971019rpc.doc

Table of Contents

Section **Page No.**

1.0 INTRODUCTION 1
Table 1: Retrofit Pilot Study Sites 1
2.0 SITE EVALUATION 2
2.1 Altadena Maintenance Station 2
2.1.1 Conclusions and Recommendations 3
2.2 Foothill Maintenance Station 5
2.2.1 Conclusions and Recommendations 6
2.3 Cerritos Maintenance Station 7
2.3.1 Conclusions and Recommendations 8
2.4 Alameda Maintenance Station 10
2.4.1 Conclusions and Recommendations 10
2.5 Termination Park and Ride 12
2.5.1 Conclusions and Recommendations 12
2.6 Paxton Park and Ride 14
2.6.1 Conclusions and Recommendations 14
2.7 North I-605 / West SR-91 Interchange 16
2.7.1 Conclusions and Recommendations 16
2.8 North I-605 / West SR-91 Interchange 18
2.8.1 Conclusions and Recommendations 19
2.9 South I-605 / East SR-91 Connector 21
2.9.1 Conclusions and Recommendations 22
2.10 South I-5 / South I–605 Connector 23
2.10.1 Conclusions and Recommendations 24
2.11 South I-5 / South I–605 Connector 26
2.11.1 Conclusions and Recommendations 27
2.12 North I-605 Between Carson Street 28
and Del Amo Boulevard 28
2.12.1 Conclusions and Recommendations 29
2.13 Sites Along The I-210 30
2.13.1 Conclusions and Recommendations 31
2.14 East Regional Maintenance Station 32
2.14.1 Conclusions and Recommendations 33
3.0 CLOSURE 35
4.0 FIGURES 36

1.0 INTRODUCTION

This report presents the conclusions and recommendations for the geotechnical portion for the Storm Water Runoff Study performed for selected sites by **THE L.K.R. GROUP, INC. (LKR)** for proposed Caltrans Retrofit Facilities in Los Angeles County, California. Site location map and selected site plans that were available at the time of this report are depicted as figures in the back of this report. The site plans that are not included with this report will be submitted upon completion.

To improve the potential quality of storm water runoff from Caltrans facilities, several types of storm water controls have been designed by RBF as part of the Best Management Practice (BMP) in the Los Angeles area.

As part of the BMP, the 21 sites were selected for the Facilities Retrofit Pilot Study after an evaluation by RBF. A site reconnaissance was performed by both LKR and RBF to evaluate constructibility of the proposed storm water runoff retrofit structures.

The following sites are part of this study:

Table 1: Retrofit Pilot Study Sites

Altadena M.S.	N 605/91W Interchange*	E 210/Orcas Ave.*
Foothill M.S.	S 605/91E Connector	East Regional M.S.
Cerritos M.S.*	S 5/605 S Connector*	Los Flores M.S.**
Alameda M.S.	S 605/605 N Interchange*	Rosemead M.S.**
Termination P & R	N 605/Carson & Del Amo*	Metro M.S.**
Paxton P & R	W 210/Van Nuys Blvd.*	Via Verde P & R**
N 605/91W Interchange*	E 210/Carl St.*	I-5/Lakewood Blvd.**

* Site Plans were not completed at the time of this report submittal.
** Not Evaluated in this report.
M. S. = Maintenance Station
P & R = Park and Ride

Refer to Figure 1, Vicinity Map, for a generalized description of the location of the sites.

The following sites are arranged in the order of Maintenance Stations, Park and Rides and others that were visited during the site evaluation reconnaissance on February 9, 1998. The sites were evaluated by conducting limited field exploration, literature searches and/or site visits. Earthwork or grading is not necessary for Catch Basin Insert (CI) retrofits at the Los Flores M. S., Foothill M. S. and Rosemead M. S. sites. The Media Filter portion of the Foothill M. S. is evaluated in this report.

At the Metro M.S., Via Verde P & R or I-5/Lakewood sites where Multi-Chambered Treatment Train (MCTT) retrofit facilities are proposed but not a part of this report.

A field reconnaissance or exploration program was not conducted at the East Regional M. S. All geotechnical data for this site was based on literature searches only. The elevation datum for ground water levels are not known at this time. The site Vicinity map and limited site Plans are in the back of this report (**Figures 1 through 8**).

2.1 Altadena Maintenance Station

The Altadena Maintenance Station is located at 2122 North Windsor Avenue at the west bound I-210 Windsor north off ramp in the City of Altadena. At the Altadena yard, a retrofit facility is proposed along an asphalt parking area near where the yard drains along a swale to a curb and storm drain inlet near the I-210 westbound Windsor Avenue off ramp. During past feasibility studies, a 13.5 foot (4.1 m) deep exploration boring encountered alluvial gravels and cobbles with a fine- to coarse sand matrix. No ground water was encountered in the boring during the exploration phase.

Records from a nearby Los Angeles County Department of Public Works (DPW) water well 4031A were examined. The depth to ground water was found to be 121.2 feet (37 m) from the surface or at an elevation of 964 feet (293 m) on 10/24/95. From the DPW Deep Aquifer depth to ground water map, the depth to ground water was determined to be approximately 150 feet (45.7 m) from the surface or at an elevation of 900 feet (74 m).

The proposed BMP facility will consist of an Infiltration Trench (IT) and a Biofiltration Strip (BSt). Values of the in-drill hole permeability test performed in the exploration boring for the feasibility study were 3.5×10^{-5} ft/s or 1.1×10^{-3} cm/s.

2.1.1 Conclusions and Recommendations

Based on the feasibility study and site visit, it was concluded that this site is feasible for the construction of an IT facility in conjunction with a BSt. During construction of the IT, large cobble and possible boulder size material could be encountered. Ground water should not be a problem during construction except after or during a rain storm. Groundwater was found to be greater than 100 feet (30.5) from the surface and a municipal water well is approximately 200 feet (60.9 m) from the IT. With the lack of clays or cementation within the on site alluvial materials, excavations could be subject to caving.

The following is recommended.

The grading contractor is responsible for notifying the appropriate governmental agency and the engineer of a pre-grading meeting, prior to the start of site cleanup, grading operations and anytime that grading operations are resumed after an interruption. Each step of the operations described below must be approved in a specific area by the engineer and, where required, by the appropriate governmental agency or agencies before proceeding with subsequent work. Where such approval is not obtained, the contractor, at his own expense, will re-do the work at the discretion of the engineering geologist/geotechnical engineer.

All site cleanup and grading will be subject to the approval of the engineer and must conform to the requirements of the pertinent governmental agencies and the following recommendations.

Prior to the start of grading, all trash, asphalt concrete and debris, shall be removed and disposed of or hauled off-site. If possible the deleterious material should be recycled.

During construction of the IT, all excavations, trenches and earthwork shall follow the California Code of Regulations Title 8, Construction Safety Orders Sections 1504, 1539 – 1543. This would include shoring of the excavation and setting up areas of exit before a worker enters.

Unless otherwise specified, all earthwork and grading will be performed under the continuous observation of the engineer.

Large cobble and/or boulder size material could be encountered inhibiting excavating with standard earthwork equipment.

If during the course of the grading, conditions are encountered which, in the opinion of the engineer, differ significantly from those described in the geotechnical report, work shall be stopped and the condition(s) evaluated. Revaluation might include further investigations.

If, in the opinion of the engineer, contractor or owner, an unsafe condition is created or encountered during grading, all work in the area will be stopped until measures can be taken to mitigate the unsafe condition. An unsafe condition shall be considered any condition that creates a danger to workers, on-site structures or construction, or any off-site properties or persons.

Existing active or abandoned underground utilities or other structures should be removed, destroyed, decommissioned or rerouted from the IT in accordance with requirements of the appropriate governing agencies. Any concrete or tile lines should be removed or rerouted away from the IT or plugged to prevent drainage.

Prior to placing the filtering media into the IT, a geofabric should be installed along the excavation wall and bottom to prevent natural materials from migrating into the filtering media. After installing the geofabric, the filtering media can be placed.

No material greater than 3-inches (7.6 cm) in diameter shall be used as backfill.

All backfill, except for the bedding, filter media and six (6) inches of cover, should be compacted to at least 90 percent of maximum density as determined by CTM 216.

A swale freeboard shall be installed to prevent organics (leaves, trash, etc.) from entering the BSt.

Root barriers should be installed to prevent nearby trees and/or bushes from invading into the IT.

In areas of new construction, where topsoil is of good quality, it should be stockpiled during construction and respread during the final stages of construction per Caltrans Highway Design Manual Topic 706.2.

All excess excavated material if found to be within Caltrans standards can be recycled for other Caltrans Projects. If Caltrans decides not to use the excavated material or the material is found to be sub-standard, the spoils can be hauled off site to an appropriate refuse or landfill location.

Since the proposed storm water retrofit facility will utilize natural on site materials as an infiltration media and the site is within 200 feet (60.9 m) of a municipal drinking water well, it is advised that a ground water monitoring wells be installed.

Installation of a ground water monitoring well should be constructed following California Well Standards. The well casing and screened sections shall be constructed out of 4-inch diameter schedule 40 PVC or better. The screen section shall have .020-inch slots or smaller with a filter pack per design.

The monitoring well shall be installed down gradient from the IT into the water table for not more than 15 feet (4.6 m). Care should be taken to prevent drilling through aquicludes or into other aquifers below the upper most water table. The well will need to be developed to achieve low turbidity and help set the filter pack.

Sampling waters from the monitoring well should be taken prior to constructing the IT for an initial screening. After the infiltration facility is constructed, a sampling schedule should be assigned for periodic sampling prior to and after the rainy season.

2.2 Foothill Maintenance Station

The Foothill Maintenance Station is located at 850 East Huntington Drive near the I-210 and Mountain Avenue off ramp in the City of Monrovia. At the Foothill yard, the retrofit facility is proposed in two areas in the asphalt parking area near where the yard drains along a swale to storm drain inlet structures. During the site reconnaissance it was noted that surface soil material consists of alluvial gravels and cobbles with a fine- to coarse-grained sand matrix. Surface cobbles and gravels with a sandy matrix were abundant in nearby open spaces.

After examining Los Angeles County Department of Public Works (DPW) water well records, no ground water well information was found for near this site. From the DPW Deep Aquifer depth to ground water map, the estimated depth to ground water was estimated to be 190 feet (57.9 m) from the surface or at the 250 foot (76.2 m) elevation. In the adjacent concrete open box channel of the Sawpit Wash, an estimated 2-inch (5 cm) sheet flow of water was present at the time of the reconnaissance on 2/9/98.

The proposed BMP facility will consist of constructing a Media Filter (MF) in conjunction with a Catch Basin Insert (CI). No geotechnical exploration or testing was performed for this site.

2.2.1 Conclusions and Recommendations

Based on a site visit, it was concluded that this site is feasible for the construction of a MF facility and the installation of a CI. During construction of the MF excavation, large cobble and possible boulder size material could be encountered. Ground water should not be a problem during construction except after or during a rain storm or possibly near the Sawpit Wash during the rainy season. With the lack of clays or cementation within the on site alluvial materials, excavations could be subject to caving. Since the storm water run off will be contained within the propose BMP devices prior to entering a storm drain, ground water monitoring, at this time, is not necessary.

The following is recommended.

The grading contractor is responsible for notifying the appropriate governmental agency and the engineer of a pre-grading meeting, prior to the start of site cleanup, grading operations and anytime that grading operations are resumed after an interruption. Each step of the operations described below must be approved in a specific area by the engineer and, where required, by the appropriate governmental agency or agencies before proceeding with subsequent work. Where such approval is not obtained, the contractor, at his own expense, will re-do the work at the discretion of the engineering geologist/geotechnical engineer.

All site cleanup and grading will be subject to the approval of the engineer and must conform to the requirements of the pertinent governmental agencies and the following recommendations.

Prior to the start of grading, all trash, asphalt concrete and debris, shall be removed and disposed of or hauled off-site. If possible the deleterious material should be recycled.

During construction of the MF, all excavations, trenches and earthwork shall follow the California Code of Regulations Title 8, Construction Safety Orders Sections 1504, 1539 – 1543. This would include shoring of the excavation and setting up areas of exit before a worker enters.

Unless otherwise specified, all earthwork and grading will be performed under the continuous observation of the engineer.

Large cobble and/or boulder size material could be encountered inhibiting excavating with standard earthwork equipment.

If during the course of the grading, conditions are encountered which, in the opinion of the engineer, differ significantly from those described in the geotechnical report, work shall be stopped and the condition(s) evaluated. Revaluation might include further investigations.

If, in the opinion of the engineer, contractor or owner, an unsafe condition is created or encountered during grading, all work in the area will be stopped until measures can be taken to mitigate the unsafe condition. An unsafe condition shall be considered any condition that creates a danger to workers, on-site structures or construction, or any off-site properties or persons.

Existing active or abandoned underground utilities or other structures should be removed, destroyed, decommissioned or rerouted from the MF in accordance with requirements of the appropriate governing agencies. Any concrete or tile lines should be removed or rerouted away from the MF.

All backfill, except for the bedding, media filter and six (6) inches of cover, should be compacted to at least 90 percent of maximum density as determined by CTM 216.

No material greater than 3-inches (7.6 cm) in diameter shall be used as backfill.

All excess excavated material if found to be within Caltrans standards can be recycled for other Caltrans Projects. If Caltrans decides not to use the excavated material or the material is found to be sub-standard, the spoils can be hauled off site to an appropriate refuse or landfill location.

2.3 Cerritos Maintenance Station

The Cerritos Maintenance Station is located off the west bound SR-91 at the end of the Studebaker offramp in the City of Cerritos. At the Cerritos yard, the retrofit facility is proposed along the southern end of an asphalt parking area outside the yard's fence. At the proposed location two inlet and outlet culvert structures are present. The culverts are connected by an asphalt swale.

During the site feasibility geotechnical investigation, sandy material was encountered from about 3 to 10 feet (.9 to 3.0 m). From the surface to about 3 feet (.9 m) and from 10 feet to 30 feet (3.0 to 9.1m), the material was sandy silt to clayey silt. This material will be less permeable than what was encountered in the 3 to 10 feet (.9 to 3.0 m) interval.

Shallow ground water was encountered in the exploration boring at approximately 30 feet (9.1 m). The water level rose to 24 feet (7.3 m) below the surface after 30 minutes in the open bore hole. After reviewing As-Built plans for the nearby Studebaker Road Undercrossing, the log of test borings showed ground water levels measured from boring (B-3) to be at 27 feet (8.2 m) below the surface or at the 93.2 foot (28.4 m) elevation on 1/18/62.

Records from a nearby Los Angeles County Department of Public Works (DPW) water well 982D were examined. The depth to water was 54 feet (16.4 m) from the surface or at an elevation of 9 feet (2.7 m) on 10/31/95. From the DPW Deep Aquifer depth to ground water map, the depth to ground water was estimated to be 105 feet (32.0 m) or at an elevation of - 20 feet (- 6.9) from the surface.

The proposed BMP facility will consist of a Biofiltration Swale (BSw).

2.3.1 Conclusions and Recommendations

Based on a feasibility study and site visit, it was concluded that this site is feasible for the construction of a BSw facility. During construction, there should be minimal excavating. Excavating should consist of brushing existing vegetation, removal of the existing asphalt swale and the construction of new impact walls at existing culvert outlets. Shallow ground water should not be a problem during construction except after or during a rain storm where ponding on the surface and saturation of the sub-grade could develop. Ground water was found to be at approximately 24 to 30 feet (7.3 to 9.1 m) from the surface. With the lack of abundant clays or cementation within the on site alluvial materials, excavations could be subject to caving.

The following is recommended.

The grading contractor is responsible for notifying the appropriate governmental agency and the engineer of a pre-grading meeting, prior to the start of site cleanup, grading operations and anytime that grading operations are resumed after an interruption. Each step of the operations described below must be approved in a specific area by the engineer and, where required, by the appropriate governmental agency or agencies before proceeding with subsequent work. Where such approval is not obtained, the contractor, at his own expense, will re-do the work at the discretion of the engineering geologist/geotechnical engineer.

All site cleanup and grading will be subject to the approval of the engineer and must conform to the requirements of the pertinent governmental agencies and the following recommendations.

Prior to the start of grading, all trash, asphalt concrete and debris, shall be removed and disposed of or hauled off-site. If possible the deleterious material should be recycled.

During construction of the BSw, all excavations, trenches and earthwork shall follow the California Code of Regulations Title 8, Construction Safety Orders Sections 1504, 1539 – 1543. This should include shoring if needed.

Unless otherwise specified, all earthwork and grading will be performed under the continuous observation of the engineer.

If during the course of the grading, conditions are encountered which, in the opinion of the engineer, differ significantly from those described in the geotechnical report, work shall be stopped and the condition(s) evaluated. Revaluation might include further investigations.

If, in the opinion of the engineer, contractor or owner, an unsafe condition is created or encountered during grading, all work in the area will be stopped until measures can be taken to mitigate the unsafe condition. An unsafe condition shall be considered any condition that creates a danger to workers, on-site structures or construction, or any off-site properties or persons.

Existing active or abandoned underground utilities or other structures should be removed, destroyed, decommissioned or rerouted from the BSw in accordance with requirements of the appropriate governing agencies. Any concrete or tile lines should be removed or rerouted away from the BSw.

Fill to be placed on slopes should be benched into competent fills or native soils.

All backfill, except for the bedding and six (6) inches of cover, should be compacted to at least 90 percent of maximum density as determined by CTM 216.

In areas of new construction, where topsoil is of good quality, it should be stockpiled during construction and respread during the final stages of construction per Caltrans Highway Design Manual Topic 706.2.

All excess excavated material if found to be within Caltrans standards can be recycled for other Caltrans Projects. If Caltrans decides not to use the excavated material or the material is found to be sub-standard, the spoils can be hauled off site to an appropriate refuse or landfill location.

2.4 Alameda Maintenance Station

The Alameda Maintenance Station is located at 1740 East 15th Street near the Alameda Street and I-10 offramp in the City of Los Angeles. At the Alameda yard, two retrofit facility locations were examined. One site was near Long Beach Boulevard to the west and the other was at the south east section of the yard near 16th Street between Staunton Avenue and Alameda Street. Both locations were near storm drain inlets. During the site reconnaissance, natural materials were not exposed for evaluation due to site paving. After reviewing geologic maps of this area, the site is shown to be built on surficial alluvium deposits of silt, sand and gravel.

Records from a nearby Los Angeles County Department of Public Works (DPW) water well 2757 were examined and found to have a questionable measured depth to water of 152 feet (46.3 m) from the surface or at the 70 foot (21.3 m) elevation on 7/4/32.

The proposed BMP facility will consist of an Oil/Water Separator (O/WS). No geotechnical exploration or testing was performed for this site.

2.4.1 Conclusions and Recommendations

Based on a site visit, it was concluded that this site is feasible for the construction of the O/WS facility. During construction of the O/WS excavation, silt, sand and/or gravels could be encountered. Shallow ground water should not be a problem during construction except after or during a rain storm. On site natural materials could be subject to caving. Since the storm water run off will be contained within the propose BMP devices prior to entering a storm drain, ground water monitoring, at this time, is not necessary.

The following is recommended.

The grading contractor is responsible for notifying the appropriate governmental agency and the engineer of a pre-grading meeting, prior to the start of site cleanup, grading operations and anytime that grading operations are resumed after an interruption. Each step of the operations described below must be approved in a specific area by the engineer and, where required, by the appropriate governmental agency or agencies before proceeding with subsequent work. Where such approval is not obtained, the contractor, at his own expense, will re-do the work at the discretion of the engineering geologist/geotechnical engineer.

All site cleanup and grading will be subject to the approval of the engineer and must conform to the requirements of the pertinent governmental agencies and the following recommendations.

Prior to the start of grading, all trash, asphalt concrete and debris, shall be removed and disposed of or hauled off-site. If possible the deleterious material should be recycled.

During construction of the O/WS, all excavations, trenches and earthwork shall follow the California Code of Regulations Title 8, Construction Safety Orders Sections 1504, 1539 – 1543. This would include shoring of the excavation and setting up areas of exit before a worker enters.

Unless otherwise specified, all earthwork and grading will be performed under the continuous observation of the engineer.

If during the course of the grading, conditions are encountered which, in the opinion of the engineer, differ significantly from those described in the geotechnical report, work shall be stopped and the condition(s) evaluated. Revaluation might include further investigations.

If, in the opinion of the engineer, contractor or owner, an unsafe condition is created or encountered during grading, all work in the area will be stopped until measures can be taken to mitigate the unsafe condition. An unsafe condition shall be considered any condition that creates a danger to workers, on-site structures or construction, or any off-site properties or persons.

Existing active or abandoned underground utilities or other structures should be removed, destroyed, decommissioned or rerouted from the O/WS in accordance with requirements of the appropriate governing agencies. Any concrete or tile lines should be removed or rerouted away from the O/WS excavation.

All backfill, except for the bedding and six (6) inches of cover, should be compacted to at least 90 percent of maximum density as determined by CTM 216.

All excess excavated material if found to be within Caltrans standards can be recycled for other Caltrans Projects. If Caltrans decides not to use the excavated material or the material is found to be sub-standard, the spoils can be hauled off site to an appropriate refuse or landfill location.

2.5 Termination Park and Ride

The Termination Park and Ride is located at the eastern terminus of the I-105 at the I-605 interchange in the City of Norwalk. At the Termination parking area, a storm water retrofit facility is proposed in the southern portion of the complex in the area of a large storm drain inlet facility. During the site reconnaissance, natural materials were not exposed for evaluation due to site paving. After examining the materials at nearby areas where natural materials were exposed, it was determined that the area consists of silty and sandy surficial alluvium deposits.

Records from a nearby Los Angeles County Department of Public Works (DPW) water well 1598K were examined. The depth to water from the surface was found to be 111 feet (33.8 m) or at the –13.5 foot (- 4.1 m) elevation on an undisclosed date. From the DPW Deep Aquifer depth to ground water map, the depth to ground water was determined to be 60 feet (18.2 m) from the surface or at the 20 foot (6.1 m) elevation.

The proposed BMP facility will consist of constructing Media Filter (MF). No geotechnical exploration or testing was performed for this site.

2.5.1 Conclusions and Recommendations

Based on a site visit, it was concluded that this site is feasible for the construction of a MF facility. During construction of the MF excavation, silt and/or sand could be encountered. Shallow ground water should not be a problem during construction except after or during a rain storm. On site natural materials could be subject to caving. Since the storm water run off will be contained within the propose BMP devices prior to entering a storm drain, ground water monitoring, at this time, is not necessary.

The following is recommended.

The grading contractor is responsible for notifying the appropriate governmental agency and the engineer of a pre-grading meeting, prior to the start of site cleanup, grading operations and anytime that grading operations are resumed after an interruption. Each step of the operations described below must be approved in a specific area by the engineer and, where required, by the appropriate governmental agency or agencies before proceeding with subsequent work. Where such approval is not obtained, the contractor, at his own expense, will re-do the work at the discretion of the engineering geologist/geotechnical engineer.

All site cleanup and grading will be subject to the approval of the engineer and must conform to the requirements of the pertinent governmental agencies and the following recommendations.

Prior to the start of grading, all trash, asphalt concrete and debris, shall be removed and disposed of or hauled off-site. If possible the deleterious material should be recycled.

During construction of the MF, all excavations, trenches and earthwork shall follow the California Code of Regulations Title 8, Construction Safety Orders Sections 1504, 1539 – 1543. This would include shoring of the excavation and setting up areas of exit before a worker enters.

Unless otherwise specified, all earthwork and grading will be performed under the continuous observation of the engineer.

If during the course of the grading, conditions are encountered which, in the opinion of the engineer, differ significantly from those described in the geotechnical report, work shall be stopped and the condition(s) evaluated. Revaluation might include further investigations.

If, in the opinion of the engineer, contractor or owner, an unsafe condition is created or encountered during grading, all work in the area will be stopped until measures can be taken to mitigate the unsafe condition. An unsafe condition shall be considered any condition that creates a danger to workers, on-site structures or construction, or any off-site properties or persons.

Existing active or abandoned underground utilities or other structures should be removed, destroyed, decommissioned or rerouted from the MF in accordance with requirements of the appropriate governing agencies. Any concrete or tile lines should be removed or rerouted away from the MF.

All backfill, except for the bedding and six (6) inches of cover, should be compacted to at least 90 percent of maximum density as determined by CTM 216.

All excess excavated material if found to be within Caltrans standards can be recycled for other Caltrans Projects. If Caltrans decides not to use the excavated material or the material is found to be sub-standard, the spoils can be hauled off site to an appropriate refuse or landfill location.

2.6 Paxton Park and Ride

The Paxton Park and Ride is located at I-210 and Paxton Street in the City of Lake View Terrace. At the Paxton parking area, a storm water retrofit facility is proposed at the south west portion of the parking area near a storm drain outlet. During the site reconnaissance, on site natural materials were found to consist of cobbles and gravels with silty sand to sand matrix. After further evaluation, the site is shown to be built on surficial alluvium deposits or fill. A boring from As-Built plans for the Paxton-Foothill Undercrossing Connector encountered slightly compact to compacted brown gravely sand to a maximum depth of approximately 50 feet (15.2 m) below the surface. No water was encountered.

Large longitude fractures in the pavement were present throughout the parking area. At the proposed site, a concrete slurry trench is present. This may indicate the presents of a utility line that was repaired.

No Los Angeles County Department of Public Works (DPW) water well information was found for this site.

The proposed BMP facility will consist of constructing a Media Filter (MF). No geotechnical exploration or testing was performed for this site.

2.6.1 Conclusions and Recommendations

Based on a site visit, it was concluded that this site is feasible for the construction of a MF facility. During construction of the MF excavation, silt, sand, gravels, cobbles and an occasional boulder could be encountered. Shallow ground water is not common in this area but should not be a problem during construction except after or during a rain storm. On site natural materials could be subject to caving. Since the storm water run off will be contained within the propose BMP devices prior to entering a storm drain, ground water monitoring, at this time, is not necessary.

The following is recommended.

The grading contractor is responsible for notifying the appropriate governmental agency and the engineer of a pre-grading meeting, prior to the start of site cleanup, grading operations and anytime that grading operations are resumed after an interruption. Each step of the operations described below must be approved in a specific area by the engineer and, where required, by the appropriate governmental agency or agencies before proceeding with subsequent work. Where such approval is not obtained, the contractor, at his own expense, will re-do the work at the discretion of the engineering geologist/geotechnical engineer.

All site cleanup and grading will be subject to the approval of the engineer and must conform to the requirements of the pertinent governmental agencies and the following recommendations.

Prior to the start of grading, all trash, asphalt concrete and debris, shall be removed and disposed of or hauled off-site. If possible the deleterious material should be recycled.

During construction of the MF, all excavations, trenches and earthwork shall follow the California Code of Regulations Title 8, Construction Safety Orders Sections 1504, 1539 – 1543. This would include shoring of the excavation and setting up areas of exit before a worker enters.

Unless otherwise specified, all earthwork and grading will be performed under the continuous observation of the engineer.

Large cobble and/or boulder size material could be encountered inhibiting excavating with standard earthwork equipment.

If during the course of the grading, conditions are encountered which, in the opinion of the engineer, differ significantly from those described in the geotechnical report, work shall be stopped and the condition(s) evaluated. Revaluation might include further investigations.

If, in the opinion of the engineer, contractor or owner, an unsafe condition is created or encountered during grading, all work in the area will be stopped until measures can be taken to mitigate the unsafe condition. An unsafe condition shall be considered any condition that creates a danger to workers, on-site structures or construction, or any off-site properties or persons.

Existing active or abandoned underground utilities or other structures should be removed, destroyed, decommissioned or rerouted from the MF in accordance with requirements of the appropriate governing agencies. Any concrete or tile lines should be removed or rerouted away from the MF.

All backfill, except for the bedding and six (6) inches of cover, should be compacted to at least 90 percent of maximum density as determined by CTM 216.

No material greater than 3-inches (7.6 cm) in diameter shall be used as backfill.

All excess excavated material if found to be within Caltrans standards can be recycled for other Caltrans Projects. If Caltrans decides not to use the excavated material or the material is found to be sub-standard, the spoils can be hauled off site to an appropriate refuse or landfill location.

2.7 North I-605 / West SR-91 Interchange

The North I-605 / West SR-91 Interchange is located between I-605 northbound, west SR-91 and south I-605 connector and the north I-605 and west SR-91 connector in the City of Cerritos. At the interchange, the retrofit facility is proposed within the undeveloped open space within the connectors. At the proposed location two culvert structures are present. These inlet and outlet culverts are connected by an open area dirt swale. The open area is covered with tree cuttings and mulch.

Feasibility studies at Cerritos Maintenance Station and at the north I-605 west SR-91 connector, encountered a 3 foot (.9 m) layer of fill on the surface with alluvial fine- to medium-grained sand with silt and minor fractions of clay below the fill to 10 feet (3.0 m). Shallow ground water was encountered in exploration borings at approximately 24 to 30 feet (7.3 to 9.1 m). After reviewing As-Built plans for the nearby Studebaker Road Undercrossing, the log of test borings showed ground water levels measured from boring (B-3) to be at 27 feet (2.7 m) below the surface or at the 93.2 foot (19.3 m) elevation on 1/18/62. The ground water data is not expected to change considerably on-site from what was encountered at the aforementioned locations.

Records from a nearby Los Angeles County Department of Public Works (DPW) water well 982D were examined. The depth to water was estimated to be 54 feet from the surface or at the 9 foot (2.7 m) elevation on 10/31/95. From the DPW Deep Aquifer depth to ground water map, the depth to ground water was estimated to be 105 feet (32.0 m) from the surface or at the - 40 foot (- 12.2 m) elevation.

The proposed BMP facility will consist of a Biofiltration Strip (BSt) and a Biofiltration Swale (BSw).

2.7.1 Conclusions and Recommendations

Based on a feasibility geotechnical investigation study and site visit, it was concluded that this site is feasible for the construction of a BSt in conjunction with a BSw facility. During construction, there should be minimal excavating. Excavating should consist of brushing existing vegetation, removal of the existing tree cuttings and mulch and the removal of the upper few feet of existing material. There should be minimal impact to the existing connector fills. Ground water was found to be approximately 30 feet (9.1 m) from the surface. Shallow ground water should not be a problem during construction except after or during a rain storm where ponding on the surface and saturation of the sub-grade could develop. With the lack of abundant clays or cementation within the alluvium materials matrix, any excavations could be subject to caving.

The following is recommended.

The grading contractor is responsible for notifying the appropriate governmental agency and the engineer of a pre-grading meeting, prior to the start of site cleanup, grading operations and anytime that grading operations are resumed after an interruption. Each step of the operations described below must be approved in a specific area by the engineer and, where required, by the appropriate governmental agency or agencies before proceeding with subsequent work. Where such approval is not obtained, the contractor, at his own expense, will re-do the work at the discretion of the engineering geologist/geotechnical engineer.

All tree cuttings and mulch must be removed from the proposed area prior to construction.

All site cleanup and grading will be subject to the approval of the engineer and must conform to the requirements of the pertinent governmental agencies and the following recommendations.

Prior to the start of grading, all trash, asphalt concrete and debris, shall be removed and disposed of or hauled off-site. If possible the deleterious material should be recycled.

During construction of the BSt and the BSw, all excavations, trenches and earthwork shall follow the California Code of Regulations Title 8, Construction Safety Orders Sections 1504, 1539 – 1543.

Unless otherwise specified, all earthwork and grading will be performed under the continuous observation of the engineer.

If during the course of the grading, conditions are encountered which, in the opinion of the engineer, differ significantly from those described in the geotechnical report, work shall be stopped and the condition(s) evaluated. Revaluation might include further investigations.

If, in the opinion of the engineer, contractor or owner, an unsafe condition is created or encountered during grading, all work in the area will be stopped until measures can be taken to mitigate the unsafe condition. An unsafe condition shall be considered any condition that creates a danger to workers, on-site structures or construction, or any off-site properties or persons.

Existing active or abandoned underground utilities or other structures should be removed, destroyed, decommissioned or rerouted from the BSt or the BSw in accordance with requirements of the appropriate governing agencies. Any concrete or tile lines should be removed or rerouted away from the BST or BSw.

Fill to be placed on slopes should be benched into competent fills or native soils.

All backfill, except for the bedding and six (6) inches of cover, should be compacted to at least 90 percent of maximum density as determined by CTM 216.

In areas of new construction, where topsoil is of good quality, it should be stockpiled during construction and respread during the final stages of construction per Caltrans Highway Design Manual Topic 706.2.

All excess excavated material if found to be within Caltrans standards can be recycled for other Caltrans Projects. If Caltrans decides not to use the excavated material or the material is found to be sub-standard, the spoils can be hauled off site to an appropriate refuse or landfill location.

2.8 North I-605 / West SR-91 Interchange

The North I-605 / West SR-91 Interchange is located in the middle of the northbound I-605, west SR-91 cloverleaf connector in the City of Cerritos. At the interchange, the retrofit facility is proposed within the undeveloped open space within the connectors. At the proposed location, three culvert structures are present. Inlet and outlet culverts entering and exiting the proposed site are connected by an unimproved open dirt area. The open area is covered with tree cuttings and mulch.

Borings drilled for the geotechnical feasibility studies at Cerritos Maintenance Station and at this location encountered sandy material was encountered from about 3 to 10 feet (.9 to 3.0 m). From the surface to about 3 feet (.9 m) and from 10 feet to 30 feet (3.0 to 9.1 m), the material was sandy silt to clayey silt. This material will be less permeable than what was encountered in the 3 to 10 feet (.9 to 3.0 m) interval.

Shallow ground water was encountered in the exploration boring at approximately 32 feet (9.7 m). After 30 minutes, the ground water rose to 30 feet (9.1 m) below the surface. After reviewing As-Built plans for the nearby Studebaker Road Undercrossing, the log of test borings showed ground water levels measured from boring (B-3) to be at 27 feet (8.2 m) below the surface or at the 93.2 foot (28.4 m) elevation on 1/18/62.

Records from a nearby Los Angeles County Department of Public Works (DPW) water well 982D were examined. The depth to water was determined to be was 54 feet (16.4 m) from the surface or at the 9 foot (2.7 m) elevation on 10/31/95. From the DPW Deep Aquifer depth to ground water map, the depth to ground water was estimated to be 105 feet (32.0 m) from the surface or at the - 45 foot (- 13.7 m) elevation.

The proposed BMP facility will consist of an Infiltration Basin (IB). Value of the feasibility in-drill hole permeability test was 5.4×10^{-6} ft/s or 1.6×10^{-4} cm/s.

2.8.1 Conclusions and Recommendations

Based on a feasibility geotechnical investigation study and site visit, it was concluded that this site is feasible for the construction of an IB facility. During construction, there should be minimal excavating. Excavating should consist of brushing existing vegetation, removal of the existing tree cuttings and mulch and the removal of the upper few feet of existing material. Ground water was found to be approximately 30 feet (9.1 m) from the surface. Shallow ground water should not be a problem during construction except after or during a rain storm where ponding on the surface and saturation of the sub-grade could develop. With the lack of abundant clays or cementation within the on site natural materials matrix, any excavations could be subject to caving.

The following is recommended.

The grading contractor is responsible for notifying the appropriate governmental agency and the engineer of a pre-grading meeting, prior to the start of site cleanup, grading operations and anytime that grading operations are resumed after an interruption. Each step of the operations described below must be approved in a specific area by the engineer and, where required, by the appropriate governmental agency or agencies before proceeding with subsequent work. Where such approval is not obtained, the contractor, at his own expense, will re-do the work at the discretion of the engineering geologist/geotechnical engineer.

All tree cuttings and mulch must be removed from the proposed area prior to construction.

All site cleanup and grading will be subject to the approval of the engineer and must conform to the requirements of the pertinent governmental agencies and the following recommendations.

For lane closure, Caltrans Standard Plans Traffic Control System for Lane Closure on Freeways and Expressways shall be followed.

Prior to the start of grading, all trash, asphalt concrete and debris, shall be removed and disposed of or hauled off-site. If possible the deleterious material should be recycled.

During construction of the IB, all excavations, trenches and earthwork shall follow the California Code of Regulations Title 8, Construction Safety Orders Sections 1504, 1539 – 1543.

Unless otherwise specified, all earthwork and grading will be performed under the continuous observation of the engineer.

If during the course of the grading, conditions are encountered which, in the opinion of the engineer, differ significantly from those described in the geotechnical report, work shall be stopped and the condition(s) evaluated. Revaluation might include further investigations.

If, in the opinion of the engineer, contractor or owner, an unsafe condition is created or encountered during grading, all work in the area will be stopped until measures can be taken to mitigate the unsafe condition. An unsafe condition shall be considered any condition that creates a danger to workers, on-site structures or construction, or any off-site properties or persons.

All cut or fill slopes shall not be greater than 2:1 horizontal to vertical or greater than 20 feet in height.

Existing active or abandoned underground utilities or other structures should be removed, destroyed, decommissioned or rerouted from the IB in accordance with requirements of the appropriate governing agencies. Any concrete or tile lines should be removed or rerouted away from the IB or plugged to prevent drainage.

Fill to be placed on slopes should be benched into competent fills or native soils.

All backfill, except for the bedding and six (6) inches of cover, should be compacted to at least 90 percent of maximum density as determined by CTM 216.

In areas of new construction, where topsoil is of good quality, it should be stockpiled during construction and respread during the final stages of construction per Caltrans Highway Design Manual Topic 706.2.

All excess excavated material if found to be within Caltrans standards can be recycled for other Caltrans Projects. If Caltrans decides not to use the excavated material or the material is found to be sub-standard, the spoils can be hauled off site to an appropriate refuse or landfill location.

Since the proposed BMP storm water retrofit facility is subject to infiltration into natural on site materials and the ground water was found to be approximately 30 feet (9.1 m) below the surface, it is highly advisable that a ground water monitoring well be installed.

Installation of a ground water monitoring well shall be constructed following California Well Standards. The well casing and screened sections shall be constructed out of 4-inch diameter schedule 40 PVC or better. The screen section shall have .020-inch slots or smaller with a filter pack per design.

The monitoring well shall be installed down gradient from the IB into the water table for not more than 15 feet (4.6 m). Care should be taken to prevent drilling through aquicludes or into aquifers below the upper most water table. The well will need to be developed to achieve low turbidity and help set the filter pack.

Sampling waters from the monitoring well should be taken prior to constructing the IB for an initial screening. After the infiltration facility is constructed, a sampling schedule should be assigned for periodic sampling prior to and after the rainy season.

2.9 South I-605 / East SR-91 Connector

The South I-605 / East SR-91 Interchange is located between southbound I-605 and the south I-605 and east SR-91 connector in the City of Cerritos. At the interchange, the retrofit facility is proposed within the undeveloped open space within the connectors. At the proposed location stockpiles of fill, a small tractor and a small grove of trees are present. The inlet and outlet culverts entering and exiting the proposed site are connected by an open area dirt swale. The open area is covered with fill, grasses and trees.

Since the area is used for fill storage, surficial fill slough from the stockpiles could be thick within the proposed area. Shallow ground water was encountered in nearby exploration borings at approximately 24 to 30 feet (7.3 to 9.1 m) below the surface at the Cerritos Maintenance Station and the I-605 northbound / SR-91 eastbound interchange. After reviewing As-Built plans for the nearby Studebaker Road Undercrossing, the log of test borings showed ground water levels measured from boring (B-3) to be at 27 feet (8.2 m) below the surface or a t 93.2 elevation (28.4 m) on 1/18/62. The ground water data should not change considerably than what was encountered at the aforementioned locations.

Records from a nearby Los Angeles County Department of Public Works (DPW) water well 982D were evaluated. The depth to water was 54 feet (16.5 m) from the surface or at the 9 foot (2.7 m) elevation on 10/31/95. From the DPW Deep Aquifer depth to ground water map, the depth to ground water was estimated to be 105 feet (32.0 m) from the surface or at the - 45 foot (- 13.7 m) elevation.

The proposed BMP facility will consist of an Extended Detention Basin (EDB). No geotechnical exploration or testing was performed for this site.

2.9.1 Conclusions and Recommendations

Based on a site visit and nearby feasibility studies, it was concluded that this site is feasible for the construction of an EDB facility. During construction, there should be minimal excavating. Excavating should consist of brushing existing vegetation and removal of the existing fill sough in the upper few feet of existing material. There should be minimal impact to the existing connector fills. Ground water was found to be from approximately 30 feet (9.1 m) from the surface. Shallow ground water should not be a problem during construction except after or during a rain storm where ponding on the surface and saturation of the sub-grade could develop. With the lack of abundant clays or cementation within the on site fill and alluvium materials matrix, any excavations could be subject to caving.

The following is recommended.

The grading contractor is responsible for notifying the appropriate governmental agency and the engineer of a pre-grading meeting, prior to the start of site cleanup, grading operations and anytime that grading operations are resumed after an interruption. Each step of the operations described below must be approved in a specific area by the engineer and, where required, by the appropriate governmental agency or agencies before proceeding with subsequent work. Where such approval is not obtained, the contractor, at his own expense, will re-do the work at the discretion of the engineering geologist/geotechnical engineer.

All fill stockpiles shall be removed from the area of the proposed EDB. All other deleterious material must be removed from the proposed area prior to construction.

All site cleanup and grading will be subject to the approval of the engineer and must conform to the requirements of the pertinent governmental agencies and the following recommendations.

Prior to the start of grading, all trash, asphalt concrete and debris, shall be removed and disposed of or hauled off-site. If possible the deleterious material should be recycled.

During construction of the EDB, all excavations, trenches and earthwork shall follow the California Code of Regulations Title 8, Construction Safety Orders Sections 1504, 1539 – 1543.

Unless otherwise specified, all earthwork and grading will be performed under the continuous observation of the engineer.

If during the course of the grading, conditions are encountered which, in the opinion of the engineer, differ significantly from those described in the geotechnical report, work shall be stopped and the condition(s) evaluated. Revaluation might include further investigations.

If, in the opinion of the engineer, contractor or owner, an unsafe condition is created or encountered during grading, all work in the area will be stopped until measures can be taken to mitigate the unsafe condition. An unsafe condition shall be considered any condition that creates a danger to workers, on-site structures or construction, or any off-site properties or persons.

All cut or fill slopes shall not be greater than 2:1 horizontal to vertical or greater than 20 feet (6.1 m) in height.

Existing active or abandoned underground utilities or other structures should be removed, destroyed, decommissioned or rerouted from the EDB in accordance with requirements of the appropriate governing agencies. Any concrete or tile lines should be removed or rerouted away from the EDB or plugged to prevent drainage.

Fill to be placed on slopes should be benched into competent fills or native soils.

All backfill, except for the bedding and six (6) inches of cover, should be compacted to at least 90 percent of maximum density as determined by CTM 216.

In areas of new construction, where topsoil is of good quality, it should be stockpiled during construction and respread during the final stages of construction per Caltrans Highway Design Manual Topic 706.2.

All excess excavated material if found to be within Caltrans standards can be recycled for other Caltrans Projects. If Caltrans decides not to use the excavated material or the material is found to be sub-standard, the spoils can be hauled off site to an appropriate refuse or landfill location.

2.10 South I-5 / South I–605 Connector

The South I-5 / South I-605 Connector is located between southbound I-605 and the south I-5 and south I-605 connector in the City of Downey. At the interchange, the retrofit facility is proposed within the undeveloped open space between the freeway and the connector. The culverts entering and exiting the proposed site are connected by an open area dirt swale. The open area is covered with grasses and trees.

After reviewing As-Built plans for the I-605 and I-5 interchange, the log of test borings showed near surface natural material to be loose to compact medium- to coarse-grained sands and interbeds of fine-grained sands, silty sand and silts. Ground water levels measured from As-Built exploration boring (B-2) south of the proposed project to be approximately 26 feet (7.9 m) below the surface or at the 90.2 foot (27.5 m) elevation on 12/11/61. Boring (B-3) to the north found ground water to be approximately 18 feet (5.5 m) below the surface or at the 100.3 foot (30.6 m) elevation on 12/15/61. Since this area of the nearby San Gabriel River is a recharge area, ground water fluctuations could develop between the rainy and dry seasons.

Records from two nearby Los Angeles County Department of Public Works (DPW) records were evaluated. The records showed that water wells 1605N and 1606U had measured depth to ground water to be 41 and 54 feet (12.5m and 16.5 m) from the surface or at the 86 and 61.5 foot (26.2 m and 18.7 m) elevations in 1995 and 1996 respectfully. From the DPW Deep Aquifer depth to ground water map, the depth to ground water was estimated to be 65 feet (19.8 m) from the surface or at the 42 foot (12.8 m) elevation.

The proposed BMP facility will consist of an Extended Detention Basin (EDB). No geotechnical exploration or testing was performed for this site.

2.10.1 Conclusions and Recommendations

Based on a site visit and reviewing As-Built plans, it was concluded that this site is feasible for the construction of an EDB facility. During construction, there should be minimal excavating. Excavating should consist of brushing existing vegetation and removal of the existing fill sough in the upper few feet of existing material. There should be minimal impact to the existing connector fills. Ground water was found to be 26 feet (7.9 m) from the surface. Shallow ground water should not be a problem during construction except after or during a rain storm where ponding on the surface and saturation of the sub-grade could develop. With the projected lack of abundant clays or cementation within the on site alluvium materials matrix, any excavations could be subject to caving.

The following is recommended.

The grading contractor is responsible for notifying the appropriate governmental agency and the engineer of a pre-grading meeting, prior to the start of site cleanup, grading operations and anytime that grading operations are resumed after an interruption. Each step of the operations described below must be approved in a specific area by the engineer and, where required, by the appropriate governmental agency or agencies before proceeding with subsequent work. Where such approval is not obtained, the contractor, at his own expense, will re-do the work at the discretion of the engineering geologist/geotechnical engineer.

All fill stockpiles, if not suitable for the proposed EDB construction, shall be removed from the area. All other deleterious material must be removed from the proposed area prior to construction.

If the fill is determined to be suitable for the use of the EDB construction, the material shall be free of all deleterious material before using as backfill.

All site cleanup and grading will be subject to the approval of the engineer and must conform to the requirements of the pertinent governmental agencies and the following recommendations.

Prior to the start of grading, all trash, asphalt concrete and debris, shall be removed and disposed of or hauled off-site. If possible the deleterious material should be recycled.

During construction of the EDB, all excavations, trenches and earthwork shall follow the California Code of Regulations Title 8, Construction Safety Orders Sections 1504, 1539 – 1543.

Unless otherwise specified, all earthwork and grading will be performed under the continuous observation of the engineer.

If during the course of the grading, conditions are encountered which, in the opinion of the engineer, differ significantly from those described in the geotechnical report, work shall be stopped and the condition(s) evaluated. Revaluation might include further investigations.

If, in the opinion of the engineer, contractor or owner, an unsafe condition is created or encountered during grading, all work in the area will be stopped until measures can be taken to mitigate the unsafe condition. An unsafe condition shall be considered any condition that creates a danger to workers, on-site structures or construction, or any off-site properties or persons.

All cut or fill slopes shall not be greater than 2:1 horizontal to vertical or greater than 20 feet in height.

Existing active or abandoned underground utilities or other structures should be removed, destroyed, decommissioned or rerouted from the EDB in accordance with requirements of the appropriate governing agencies. Any concrete or tile lines should be removed or rerouted away from the EDB and plugged to prevent drainage.

Fill to be placed on slopes should be benched into competent fills or native soils.

All backfill, except for the bedding and six (6) inches of cover, should be compacted to at least 90 percent of maximum density as determined by CTM 216.

In areas of new construction, where topsoil is of good quality, it should be stockpiled during construction and respread during the final stages of construction per Caltrans Highway Design Manual Topic 706.2.

All excess excavated material if found to be within Caltrans standards can be recycled for other Caltrans Projects. If Caltrans decides not to use the excavated material or the material is found to be sub-standard, the spoils can be hauled off site to an appropriate refuse or landfill location.

2.11 South I-5 / South I–605 Connector

The South I-5 / South I-605 Connector is located between southbound I-605 and the south I-5 and south I-605 connector in the City of Downey. At the interchange, the retrofit facility is proposed within the undeveloped open space between the freeway and the connector. The culverts entering and exiting the proposed site are connected by an open area dirt swale to a large box structure. The open area is covered with grasses and trees.

After reviewing As-Built plans for the I-605 and I-5 interchange, the log of test borings showed near surface natural material to be loose to compact medium- to coarse-grained sands and interbeds of fine-grained sands, silty sand and silts. Ground water levels measured from As-Built exploration boring (B-2) south of the proposed project to be approximately 26 feet (7.9 m) below the surface or at the 90.2 foot (27.5 m) elevation on 12/11/61. Boring (B-3) to the north found ground water to be approximately 18 feet (5.5 m) below the surface or at the 100.3 foot (30.6 m) elevation on 12/15/61. Since this area of the nearby San Gabriel River recharge area, ground water fluctuations could develop between the rainy and dry seasons.

Records from nearby Los Angeles County Department of Public Works (DPW) water wells 1605N and 1606U were examined. The depth to ground water was 41 and 54 feet (12.5 m and 16.5 m) from the surface or at elevations of 86 and 61.5 foot (26.2 m and 18.7 m) in 1995 and 1996 respectfully. From the DPW Deep Aquifer depth to ground water map, the depth to ground water was determined to be 65 feet (19.8 m) from the surface or at the 42 foot (12.8 m) elevation.

The proposed BMP facility will consist of a Biofiltration Swale (BSw). No geotechnical exploration or testing was performed for this site.

2.11.1 Conclusions and Recommendations

Based on a site visit and a review of As-Built plans, it was concluded that this site is feasible for the construction of a BSw facility. During construction, there should be minimal excavating. Excavating should consist of brushing existing vegetation and removal of the existing fill sough in the upper few feet of existing material. There should be minimal impact to the existing connector fills. Ground water was found to be at approximately 26 feet (7.9 m) from the surface. Shallow ground water should not be a problem during construction except after or during a rain storm where ponding on the surface and saturation of the sub-grade could develop. With the projected lack of abundant clays or cementation within the on site natural materials matrix, any excavations could be subject to caving.

The following is recommended.

The grading contractor is responsible for notifying the appropriate governmental agency and the engineer of a pre-grading meeting, prior to the start of site cleanup, grading operations and anytime that grading operations are resumed after an interruption. Each step of the operations described below must be approved in a specific area by the engineer and, where required, by the appropriate governmental agency or agencies before proceeding with subsequent work. Where such approval is not obtained, the contractor, at his own expense, will re-do the work at the discretion of the engineering geologist/geotechnical engineer.

All site cleanup and grading will be subject to the approval of the engineer and must conform to the requirements of the pertinent governmental agencies and the following recommendations.

Prior to the start of grading, all trash, asphalt concrete and debris, shall be removed and disposed of or hauled off-site. If possible the deleterious material should be recycled.

During construction of the BSw, all excavations, trenches and earthwork shall follow the California Code of Regulations Title 8, Construction Safety Orders Sections 1504, 1539 – 1543.

Unless otherwise specified, all earthwork and grading will be performed under the continuous observation of the engineer.

If during the course of the grading, conditions are encountered which, in the opinion of the engineer, differ significantly from those described in the geotechnical report, work shall be stopped and the condition(s) evaluated. Revaluation might include further investigations.

If, in the opinion of the engineer, contractor or owner, an unsafe condition is created or encountered during grading, all work in the area will be stopped until measures can be taken to mitigate the unsafe condition. An unsafe condition shall be considered any condition that creates a danger to workers, on-site structures or construction, or any off-site properties or persons.

Existing active or abandoned underground utilities or other structures should be removed, destroyed, decommissioned or rerouted from the BSw in accordance with requirements of the appropriate governing agencies. Any concrete or tile lines should be removed or rerouted away from the BSw.

Fill to be placed on slopes should be benched into competent fills or native soils.

All backfill, except for the bedding and six (6) inches of cover, should be compacted to at least 90 percent of maximum density as determined by CTM 216.

In areas of new construction, where topsoil is of good quality, it should be stockpiled during construction and respread during the final stages of construction per Caltrans Highway Design Manual Topic 706.2.

All excess excavated material if found to be within Caltrans standards can be recycled for other Caltrans Projects. If Caltrans decides not to use the excavated material or the material is found to be sub-standard, the spoils can be hauled off site to an appropriate refuse or landfill location.

2.12 North I-605 Between Carson Street and Del Amo Boulevard

The proposed site is located along the shoulder of northbound I-605 between the Carson Street and Del Amo Boulevard offramps in the City of Lakewood. Within the area, the retrofit facility is proposed along a strip of undeveloped open space between the freeway and a sound wall. The inlet and outlet culverts are connected by an open area swale. The open area is covered with grasses, iceplant, ivy and trees.

Records of nearby Los Angeles County Department of Public Works (DPW) water wells 1605N and 1606U were examined. The depth to ground water was found to be 41 and 54 feet (12.5 m and 16.5 m) from the surface or at the 9 and – 4 feet (2.7 m and – 1.2 m) elevation in 1995 and 1996 respectfully. From the DPW Deep Aquifer depth to ground water map, the depth to ground water was estimated to be 92 feet (28.0 m) from the surface or the - 42 foot (- 12.8 m) elevation. Experience in the area suggests that a shallow perched water condition at approximately 10 feet (3.0 m) from the surface should exist.

The proposed BMP facility will consist of a Biofiltration Swale (BSw). No geotechnical exploration or testing was performed for this site.

2.12.1 Conclusions and Recommendations

Based on site visit and a review of As-Built plans, it was concluded that this site is feasible for the construction of a BSw facility. During construction, there should be minimal excavating. Excavating should consist of brushing existing vegetation and removal of the existing fill sough in the upper few feet of existing material. There should be minimal impact to the existing connector fills. Ground water was found to be 92 feet (28.0 m) from the surface or at the - 42 foot (-12.8 m) elevation. Shallow ground water should not be a problem during construction except after or during a rain storm where ponding on the surface and saturation of the sub-grade could develop. With the projected lack of abundant clays or cementation within the on site natural materials matrix, any excavations could be subject to caving.

The following is recommended.

The grading contractor is responsible for notifying the appropriate governmental agency and the engineer of a pre-grading meeting, prior to the start of site cleanup, grading operations and anytime that grading operations are resumed after an interruption. Each step of the operations described below must be approved in a specific area by the engineer and, where required, by the appropriate governmental agency or agencies before proceeding with subsequent work. Where such approval is not obtained, the contractor, at his own expense, will re-do the work at the discretion of the engineering geologist/geotechnical engineer.

All site cleanup and grading will be subject to the approval of the engineer and must conform to the requirements of the pertinent governmental agencies and the following recommendations.

For lane closure, Caltrans Standard Plans Traffic Control System for Lane Closure on Freeways and Expressways shall be followed.

Prior to the start of grading, all trash, asphalt concrete and debris, shall be removed and disposed of or hauled off-site. If possible the deleterious material should be recycled.

During construction of the BSw, all excavations, trenches and earthwork shall follow the California Code of Regulations Title 8, Construction Safety Orders Sections 1504, 1539 – 1543.

Unless otherwise specified, all earthwork and grading will be performed under the continuous observation of the engineer.

If during the course of the grading, conditions are encountered which, in the opinion of the engineer, differ significantly from those described in the geotechnical report, work shall be stopped and the condition(s) evaluated. Revaluation might include further investigations.

If, in the opinion of the engineer, contractor or owner, an unsafe condition is created or encountered during grading, all work in the area will be stopped until measures can be taken to mitigate the unsafe condition. An unsafe condition shall be considered any condition that creates a danger to workers, on-site structures or construction, or any off-site properties or persons.

Existing active or abandoned underground utilities or other structures should be removed, destroyed, decommissioned or rerouted from the BSw in accordance with requirements of the appropriate governing agencies. Any concrete or tile lines should be removed or rerouted away from the BSw and plugged to prevent drainage.

Fill to be placed on slopes should be benched into competent fills or native soils.

All backfill, except for the bedding and six (6) inches of cover, should be compacted to at least 90 percent of maximum density as determined by CTM 216.

In areas of new construction, where topsoil is of good quality, it should be stockpiled during construction and respread during the final stages of construction per Caltrans Highway Design Manual Topic 706.2.

All excess excavated material if found to be within Caltrans standards can be recycled for other Caltrans Projects. If Caltrans decides not to use the excavated material or the material is found to be sub-standard, the spoils can be hauled off site to an appropriate refuse or landfill location.

2.13 Sites Along The I-210

Four sites along the I-210 are proposed for the installation of Trapping Catch Basin (TC) type facilities. These sites include; 1) four inlets approximately 850 feet west of Orcas Avenue; 2) four inlets approximately 150 feet east of Orcas Avenue; 3) five inlets approximately 600 feet west of Van Nuys Boulevard; and 4) seven outlets just north of Carl Street. All proposed locations are in the City of Lakeview Terrace.

During the site reconnaissance, on site natural materials were found to consist of cobbles and gravels with silty sand to sand matrix. After further evaluation, the site is shown to be built on surficial alluvium deposits or fill. Borings from selected As-Built plans at the I-210 Van Nuys Boulevard, Paxton Street and other selected As-Builts along the I-210 route encountered slightly compact to compact brown gravely sand to a maximum depth of approximately 50 feet (15.4 m) below the surface. Boulders and cobbles were noted close to the surface. No water was encountered in these borings.

Los Angeles County Department of Public Works (DPW) water well information was found for this site.

Since the storm water run off will be contained within the propose BMP devices prior to entering a storm drain, ground water monitoring, at this time, is not necessary. No geotechnical exploration or testing was performed for these sites.

2.13.1 Conclusions and Recommendations

Based on site visits at the Van Nuys Boulevard and the Carl Street site, it was concluded that the sites are similar in geotechnical properties and are feasible for the construction of TC facilities. During construction of the TC excavation, silt, sand, gravels, cobbles and an occasional boulder could be encountered. Shallow ground water is not common in this area but should not be a problem during construction except after or during a rain storm. On site natural materials could be subject to caving. Since the storm water run off will be contained within the propose devices for this site prior to entering a storm drain, ground water monitoring, at this time, is not necessary. The following is recommended.

The grading contractor is responsible for notifying the appropriate governmental agency and the engineer of a pre-grading meeting, prior to the start of site cleanup, grading operations and anytime that grading operations are resumed after an interruption. Each step of the operations described below must be approved in a specific area by the engineer and, where required, by the appropriate governmental agency or agencies before proceeding with subsequent work. Where such approval is not obtained, the contractor, at his own expense, will re-do the work at the discretion of the engineering geologist/geotechnical engineer.

All site cleanup and grading will be subject to the approval of the engineer and must conform to the requirements of the pertinent governmental agencies and the following recommendations.

Prior to the start of grading, all trash, asphalt concrete and debris, shall be removed and disposed of or hauled off-site. If possible the deleterious material should be recycled.

During construction of the TC, all excavations, trenches and earthwork shall follow the California Code of Regulations Title 8, Construction Safety Orders Sections 1504, 1539 – 1543. This would include shoring of the excavation and setting up areas of exit before a worker enters.

Unless otherwise specified, all earthwork and grading will be performed under the continuous observation of the engineer.

If during the course of the grading, conditions are encountered which, in the opinion of the engineer, differ significantly from those described in the geotechnical report, work shall be stopped and the condition(s) evaluated. Revaluation might include further investigations.

If, in the opinion of the engineer, contractor or owner, an unsafe condition is created or encountered during grading, all work in the area will be stopped until measures can be taken to mitigate the unsafe condition. An unsafe condition shall be considered any condition that creates a danger to workers, on-site structures or construction, or any off-site properties or persons.

Existing active or abandoned underground utilities or other structures should be removed, destroyed, decommissioned or rerouted from the TC in accordance with requirements of the appropriate governing agencies. Any concrete or tile lines should be removed or rerouted away from the TC.

All backfill, except for the bedding and six (6) inches of cover, should be compacted to at least 90 percent of maximum density as determined by CTM 216.

All excess excavated material if found to be within Caltrans standards can be recycled for other Caltrans Projects. If Caltrans decides not to use the excavated material or the material is found to be sub-standard, the spoils can be hauled off site to an appropriate refuse or landfill location.

2.14 East Regional Maintenance Station

The East Regional Maintenance Station is located at 19405 Workman Mill Road just of the SR-60 Freeway in the County of Los Angeles area of Avocado Heights / Whittier. At the East Regional yard, a retrofit facility is proposed along an asphalt parking area near the Crossroads Parkway north and Workman Mill Road intersection. Since no feasibility study or site visit was conducted by the engineer, the information pertaining to this proposed BMP site is based on literature searches and past studies performed in this area. The evaluation of this area alluvial gravels and cobbles with a fine- to coarse sand matrix.

Records from a nearby Los Angeles County Department of Public Works (DPW) water well 2966P was evaluated. The depth to ground water was found to be 77 feet (23.5 m) from the surface or at the 233 foot (71.0 m) elevation in 1995. From the DPW Deep Aquifer depth to ground water map, the depth to ground water was estimated to be 60 feet (18.3 m) from the surface or at the 200 foot (61.0 m) elevation.

The proposed BMP facility will consist of a Media Filter (MF) facility. No geotechnical exploration or testing was performed for this site.

2.14.1 Conclusions and Recommendations

Based on in house research, it was concluded that this site is feasible for the construction of a MF facility. During construction of the MF excavation, large cobble and possible boulder size material could be encountered. Ground water from DPW data base determined the depth of water to be approximately 60 feet in depth. Past experiences in this area and the proximity to both the San Gabriel River recharge area and the San Jose Creek, it can be concluded that ground water depths at the proposed site may be less than 60 feet. Ground water should not be a problem during construction except after or during a rain storm. With the lack of clays or cementation within the on site alluvial materials, excavations could be subject to caving. Since the storm water run off will be contained within the propose MF devices prior to entering a storm drain, ground water monitoring, at this time, is not necessary.

The following is recommended.

The grading contractor is responsible for notifying the appropriate governmental agency and the engineer of a pre-grading meeting, prior to the start of site cleanup, grading operations and anytime that grading operations are resumed after an interruption. Each step of the operations described below must be approved in a specific area by the engineer and, where required, by the appropriate governmental agency or agencies before proceeding with subsequent work. Where such approval is not obtained, the contractor, at his own expense, will re-do the work at the discretion of the engineering geologist/geotechnical engineer.

All site cleanup and grading will be subject to the approval of the engineer and must conform to the requirements of the pertinent governmental agencies and the following recommendations.

Prior to the start of grading, all trash, asphalt concrete and debris, shall be removed and disposed of or hauled off-site. If possible the deleterious material should be recycled.

During construction of the MF, all excavations, trenches and earthwork shall follow the California Code of Regulations Title 8, Construction Safety Orders Sections 1504, 1539 – 1543. This would include shoring of the excavation and setting up areas of exit before a worker enters.

Unless otherwise specified, all earthwork and grading will be performed under the continuous observation of the engineer.

Large cobble and/or boulder size material could be encountered inhibiting excavating with standard earthwork equipment.

If during the course of the grading, conditions are encountered which, in the opinion of the engineer, differ significantly from those described in the geotechnical report, work shall be stopped and the condition(s) evaluated. Revaluation might include further investigations.

If, in the opinion of the engineer, contractor or owner, an unsafe condition is created or encountered during grading, all work in the area will be stopped until measures can be taken to mitigate the unsafe condition. An unsafe condition shall be considered any condition that creates a danger to workers, on-site structures or construction, or any off-site properties or persons.

Existing active or abandoned underground utilities or other structures should be removed, destroyed, decommissioned or rerouted from the MF in accordance with requirements of the appropriate governing agencies. Any concrete or tile lines should be removed or rerouted away from the MF.

All backfill, except for the bedding, media filter and six (6) inches of cover, should be compacted to at least 90 percent of maximum density as determined by CTM 216.

No material greater than 3-inches (7.6 cm) in diameter shall be used as backfill.

All excess excavated material if found to be within Caltrans standards can be recycled for other Caltrans Projects. If Caltrans decides not to use the excavated material or the material is found to be sub-standard, the spoils can be hauled off site to an appropriate refuse or landfill location.

3.0 CLOSURE

The findings and recommendations contained in this report are based upon specific limited field exploration, literature searches and/or site visits. The materials immediately adjacent to or beneath those observed may have different characteristics and no representations are made as to the quality or extent of materials not observed.

This report has not been prepared for use by parties or projects other than those named or described above. It may not contain sufficient information for other parties or other purposes. It has been prepared in accordance with generally accepted geotechnical practice and makes no other warranties, either expressed or implied, as to the professional advice or data included in it.

Evaluation of the sites where plans were not available during the preparation of this report were based on verbal and written descriptions, and the analysis during a site visit and/or limited field exploration programs.

4.0 FIGURES

The following **Figures 1 through 8** consist of a site Vicinity Map and selected site Plans. At the time that this report was submitted, not all of the site Plans were complete. The Plans within this report are what was completed at the time of submittal.

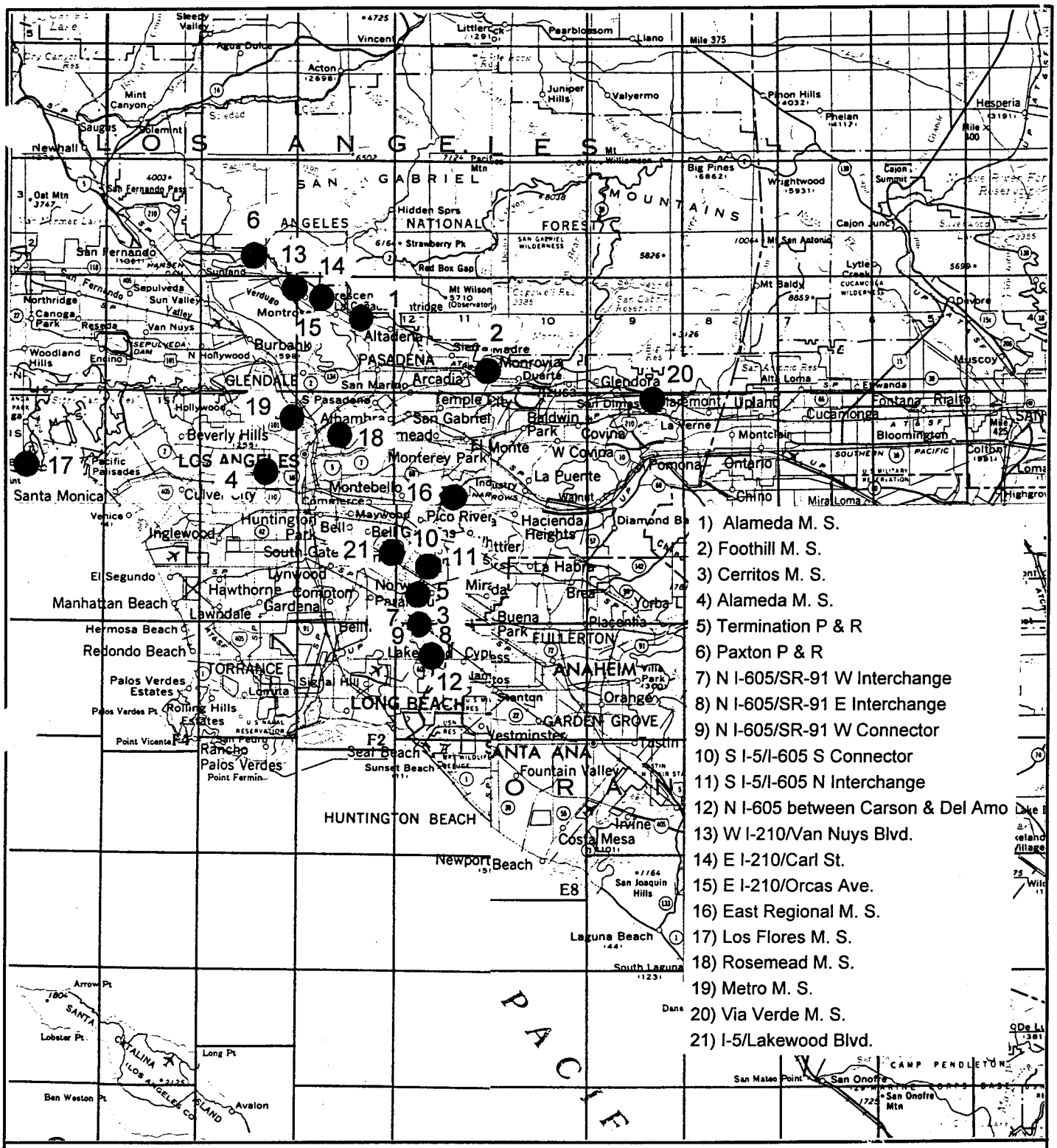

VICINITY MAP

Reference: U.S.G.S. Index to California Topographic Maps

The L.K.R. Group, Inc.

Project Number: 97-1019C

Project Name: RBF-Caltrans Storm Water Runoff Study

Date: 03/10/98

Figure 1

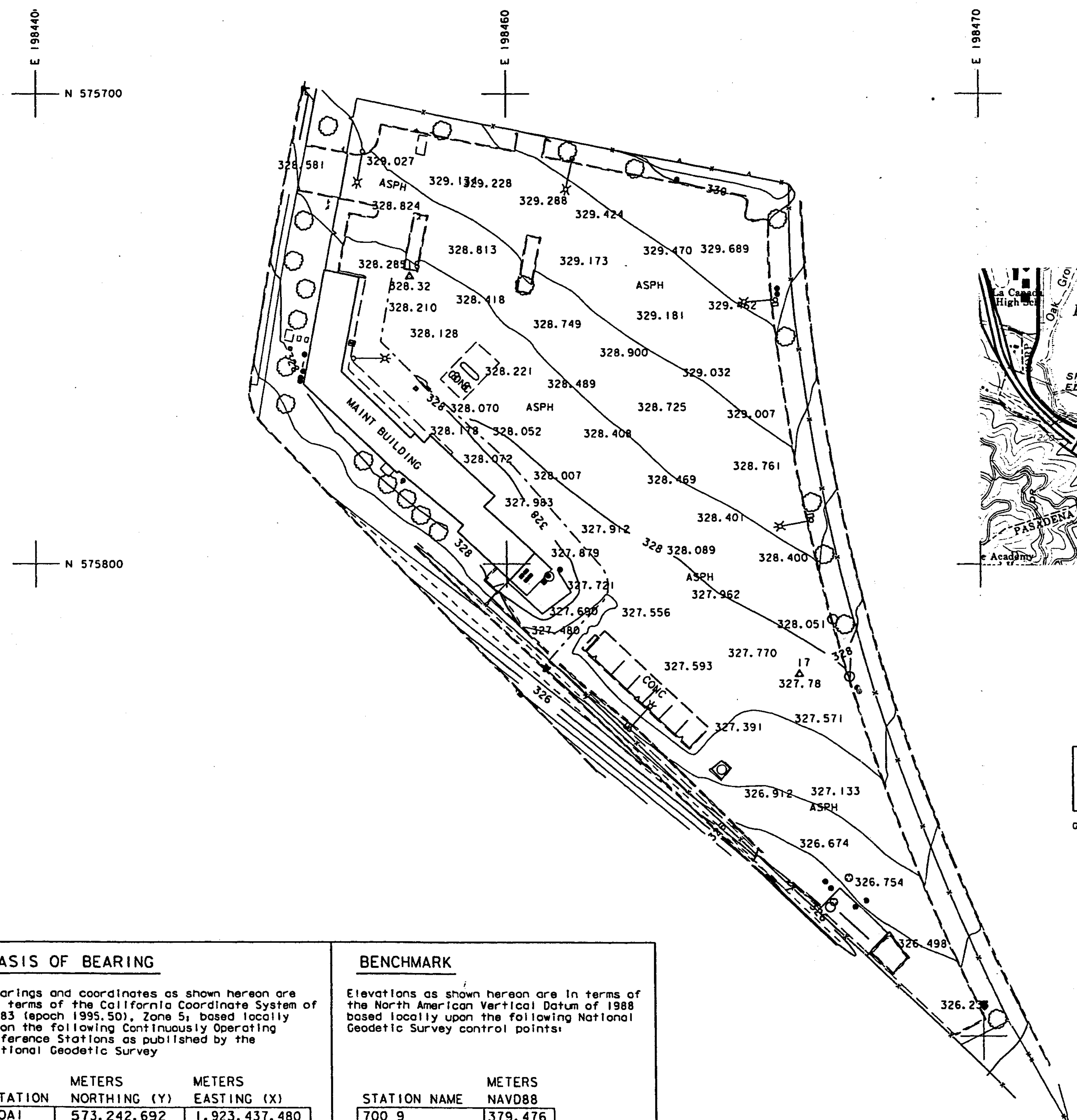

SCALE 1:500

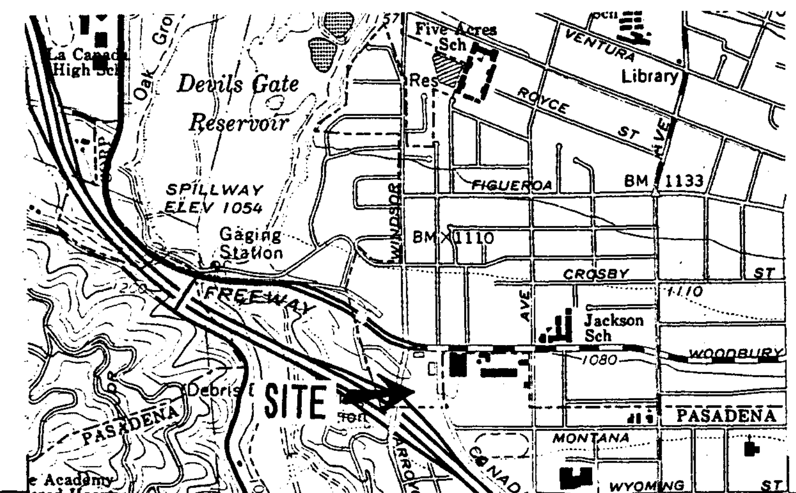

COORDINATE SYSTEM: CCS ZONE
NATIONAL GEODETIC VERTICAL
DATUM OF

STATE OF CALIFORNIA DEPARTMENT OF TRANSPORTATION 1.2 ALTADENA MAINETNANCE STATION SCALE: 1 m=500 m CONTOUR INTERVAL = .5m	ASC Photography Date ASC Compiled by ROBERT BEIN, WILLIAM FROST AND ASSOC.	SHEET 1 OF 1 Completed 1-28-98

Global Origin: GO= 1609251.6352 410251.6352 -214748.3648 Plane No. 25W File Name: 34278ES06.DGN

BASIS OF BEARING

Bearings and coordinates as shown hereon are in terms of the California Coordinate System of 1983 (epoch 1995.50), Zone 5; based locally upon the following Continuously Operating Reference Stations as published by the National Geodetic Survey

STATION	METERS NORTHING (Y)	METERS EASTING (X)
AOA1	573,242.692	1,923,437.480
CIT1	570,633.993	1,988,261.458
CLAR	567,694.931	2,026,867.926
LBCH	531,939.993	1,981,168.043
LEEP	570,440.253	1,970,323.973
LONG	567,874.717	1,999,686.948
OAT2	592,220.446	1,944,662.114

BENCHMARK

Elevations as shown hereon are in terms of the North American Vertical Datum of 1988 based locally upon the following National Geodetic Survey control points:

STATION NAME	METERS NAVD88
700 9	379.476
MF 365	128.077
OAKS	243.481
TIDAL8	4.131
UF 629	310.305
Y 609	269.558

FIGURE 2

1.2 ALTADENA MAINTENANCE STATION

THE LKR GROUP
The L.K.R. Group, Inc.
Geotechnical Engineers
2341 205th Street, Suite 103
Torrance, CA 90501
Phone 310/320-5100

Robert Bein, William Frost & Associates
PROFESSIONAL ENGINEERS, PLANNERS & SURVEYORS
P.O. BOX 57057 14725 ALTON PARKWAY, IRVINE, CALIFORNIA 92619-7057
(714) 472-3505

REVISED BY | DATE REVISED | DATE | CALCULATED/ DESIGNED BY | CHECKED BY | PROJECT ENGINEER

STATE OF CALIFORNIA - DEPARTMENT OF TRANSPORTATION

Caltrans

FOR REDUCED PLANS ORIGINAL 0 20 40 60 80

USERNAME => $USER

DIST	COUNTY	ROUTE	KILOMETER POST TOTAL PROJECT	SHEET NO.	TOTAL SHEETS
X	LA	605.91	X.XX		

REGISTERED CIVIL ENGINEER

PLANS APPROVAL DATE

X

REGISTERED PROFESSIONAL ENGINEER No. Exp. CIVIL STATE OF CALIFORNIA

BROWN AND CALDWELL
16735 VON KARMAN
IRVINE, CA 92606

The State of California or its officers or agents shall not be responsible for the accuracy or completeness of electronic copies of this plan sheet.

Caltrans Metric

ALL DIMENSIONS ARE IN METERS UNLESS OTHERWISE SHOWN

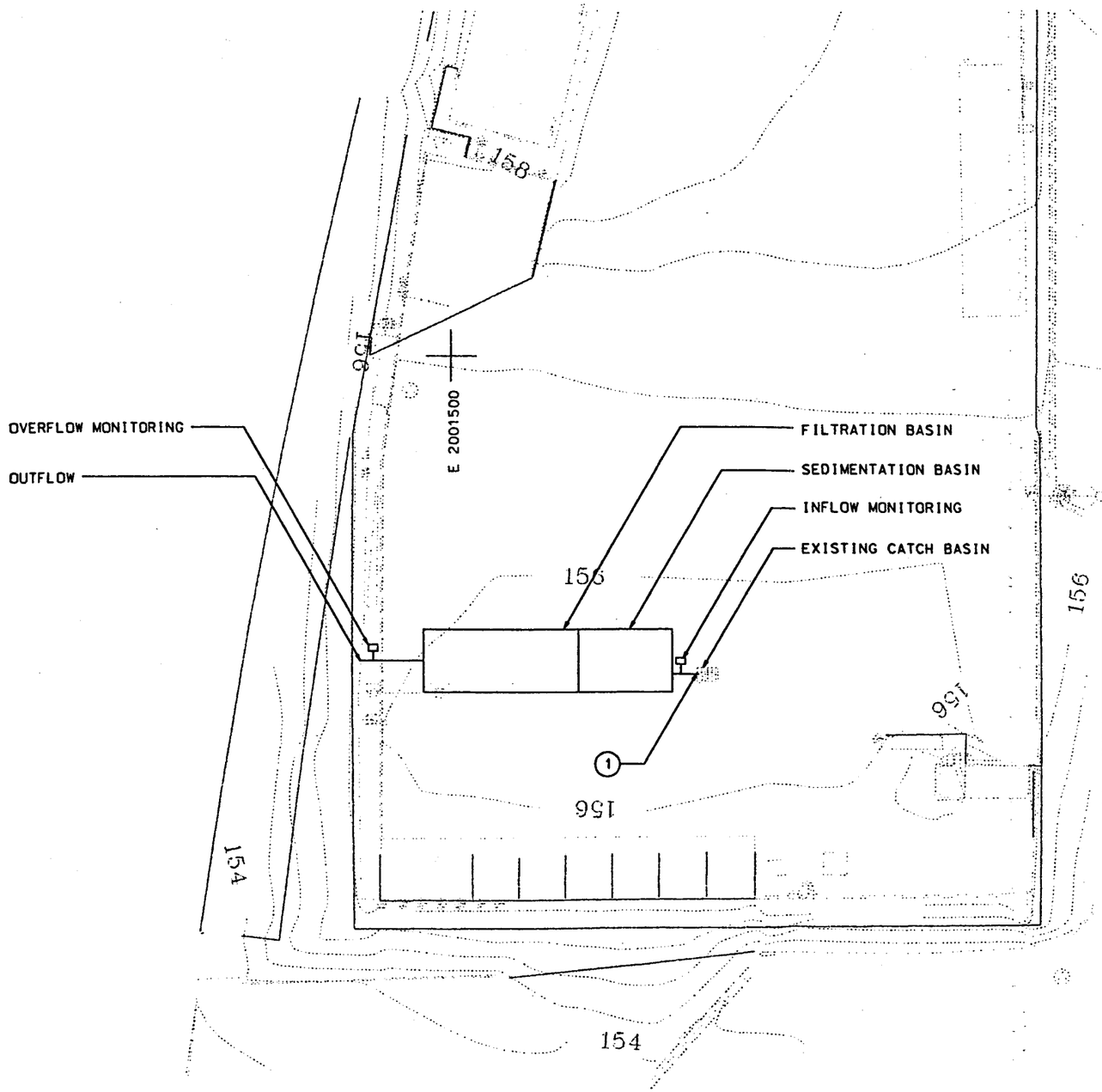

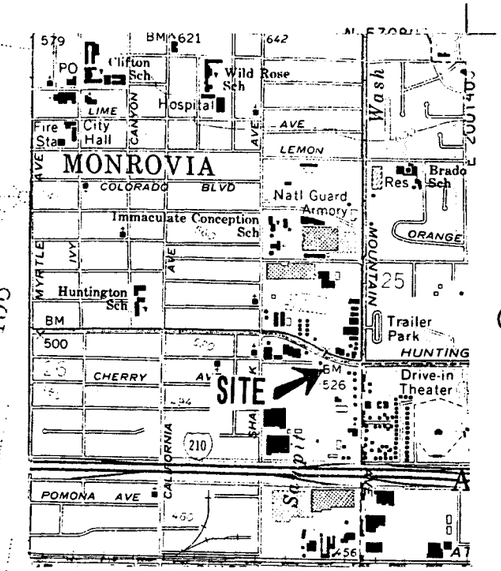

CONSTRUCTION NOTES

1. CONNECT TO EXISTING CATCH BASIN

THE LKR GROUP
The L.K.R. Group, Inc.
Geotechnical Engineers
2341 205th Street, Suite 103
Torrance, CA 90501
Phone 310/320-5100

FIGURE 3

FOOTHILL MAINTENANCE STATION

SCALE 1:500

DATE	REVISED BY	DATE REVISED
2/97		2/97

CALCULATED/DESIGNED BY
CHECKED BY
DESIGN OVERSIGHT

STATE OF CALIFORNIA - DEPARTMENT OF TRANSPORTATION
Caltrans

DATES STIME FILES

ALL DIMENSIONS ARE IN METERS UNLESS OTHERWISE SHOWN

Caltrans Metric

DIST	COUNTY	ROUTE	KILOMETER POST TOTAL PROJECT	SHEET NO.	TOTAL SHEETS
X	LA	605.91	X.XX		

REGISTERED CIVIL ENGINEER

PLANS APPROVAL DATE

X

REGISTERED PROFESSIONAL ENGINEER No. Exp. CIVIL STATE OF CALIFORNIA

BROWN AND CALDWELL
16735 VON KARMAN
IRVINE, CA 92606

The State of California or its officers or agents shall not be responsible for the accuracy or completeness of electronic copies of this plan sheet.

CONSTRUCTION NOTES

1. REGRADE SHADED AREA

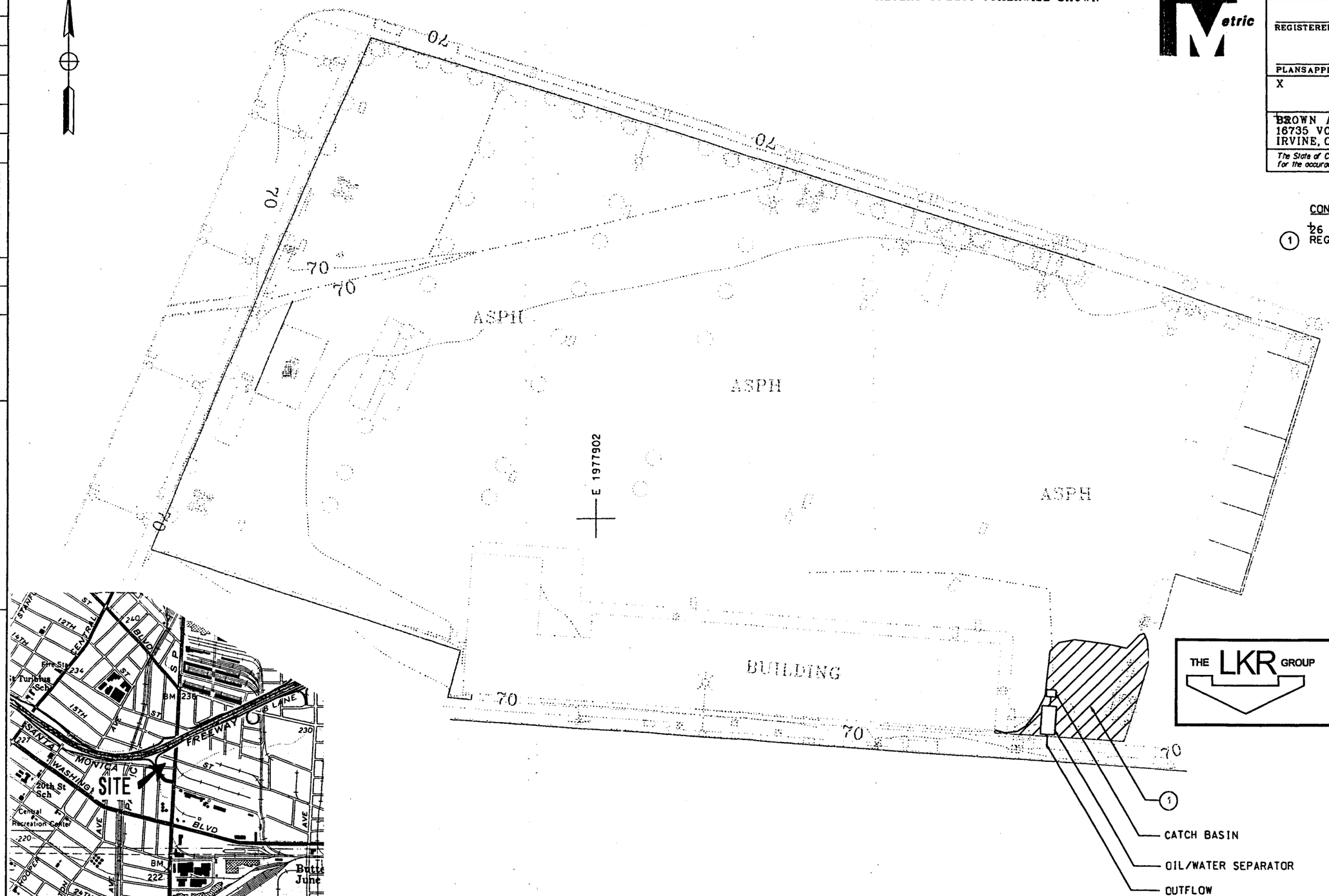

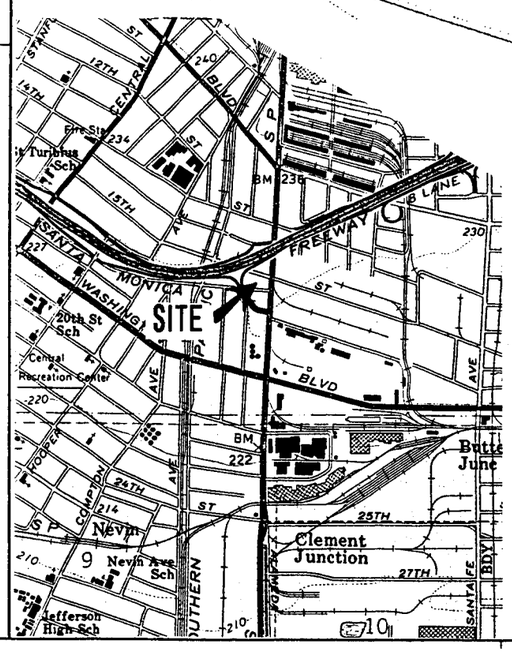

THE LKR GROUP
The L.K.R. Group, Inc.
Geotechnical Engineers
2341 205th Street, Suite 103
Torrance, CA 90501
Phone 310/320-5100

FIGURE 4

ALAMEDA MAINTENANCE STATION

SCALE 1:500

DATE	REVISED BY	DATE REVISED
2/97		2/97

CALCULATED/DESIGNED BY

CHECKED BY

DESIGN OVERSIGHT

STATE OF CALIFORNIA - DEPARTMENT OF TRANSPORTATION

Caltrans

DATES STIME FILES

DIST	COUNTY	ROUTE	KILOMETER POST TOTAL PROJECT	SHEET NO.	TOTAL SHEETS
X	LA	605.91	X.XX		

REGISTERED CIVIL ENGINEER

PLANS APPROVAL DATE

X

REGISTERED PROFESSIONAL ENGINEER No. Exp. CIVIL STATE OF CALIFORNIA

BROWN AND CALDWELL
16735 VON KARMAN
IRVINE, CA 92606

The State of California or its officers or agents shall not be responsible for the accuracy or completeness of electronic copies of this plan sheet.

ALL DIMENSIONS ARE IN METERS UNLESS OTHERWISE SHOWN

Caltrans Metric

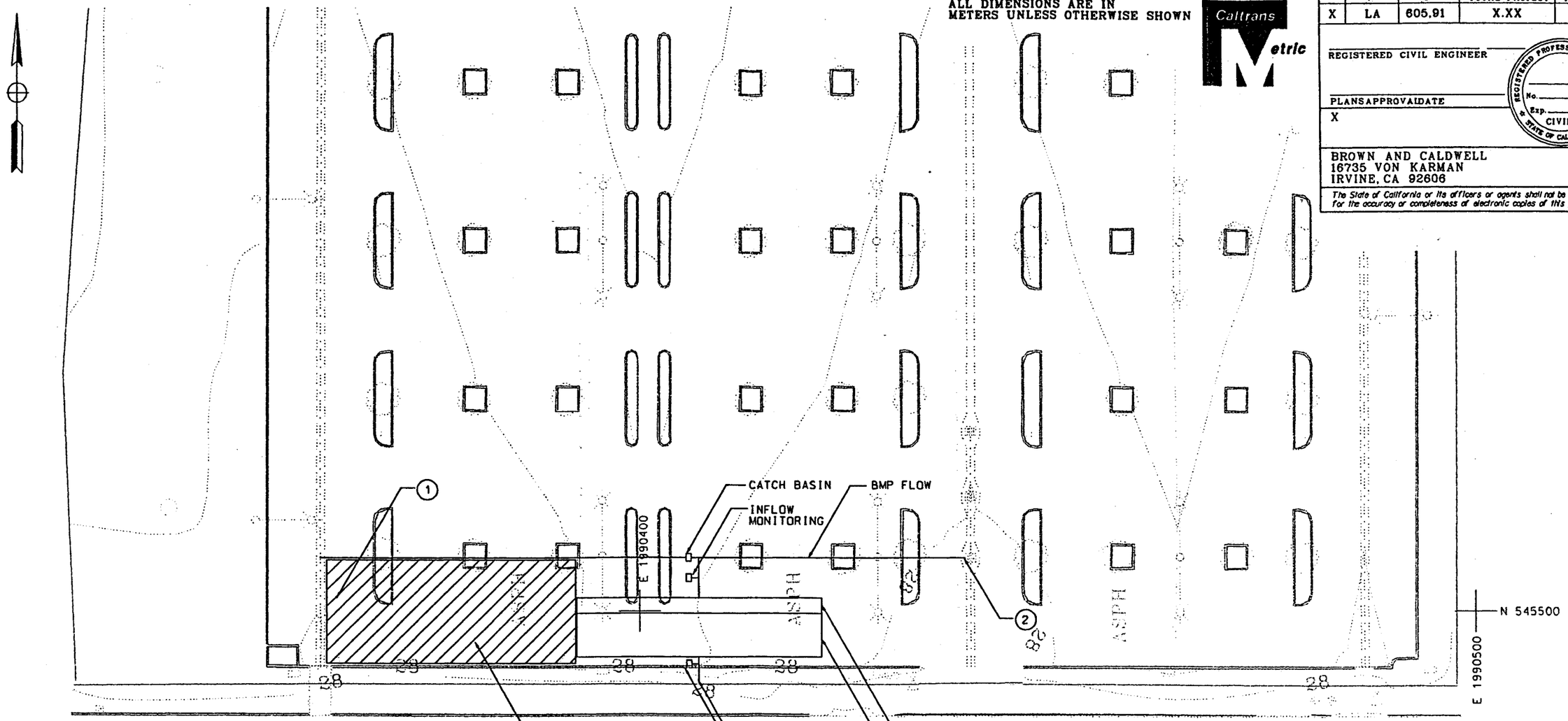

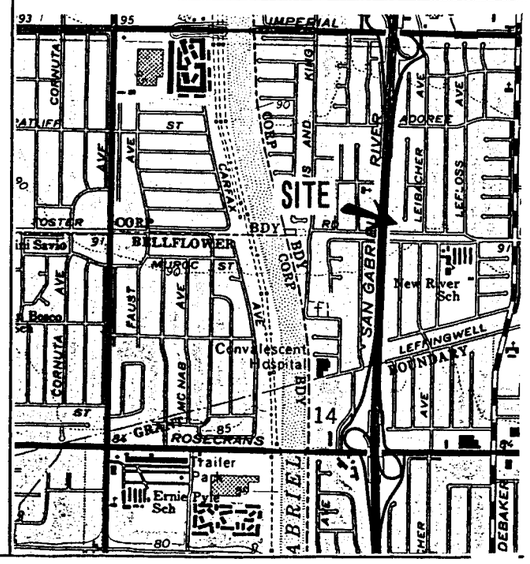

CONSTRUCTION NOTES

1. CONSTRUCT NEW V-DITCH AND CONNECT TO EXISTING V-DITCH
2. CONNECT TO EXISTING CATCH BASIN
3. REGRADE SHADED AREA

THE LKR GROUP
The L.K.R. Group, Inc.
Geotechnical Engineers
2341 205th Street, Suite 103
Torrance, CA 90501
Phone 310/320-5100

TERMINATION PARK AND RIDE

SCALE 1:500

FIGURE 5

DATE	REVISED BY	DATE REVISED
2/97		2/97

CALCULATED/DESIGNED BY
CHECKED BY

DESIGN OVERSIGHT

Caltrans

$DATES $TIME $FILES

ALL DIMENSIONS ARE IN METERS UNLESS OTHERWISE SHOWN

Caltrans Metric

DIST	COUNTY	ROUTE	KILOMETER POST TOTAL PROJECT	SHEET NO.	TOTAL SHEETS
X	LA	605,91	X.XX		

REGISTERED CIVIL ENGINEER

PLANS APPROVAL DATE

X

REGISTERED PROFESSIONAL ENGINEER No. Exp. CIVIL STATE OF CALIFORNIA

BROWN AND CALDWELL
16735 VON KARMAN
IRVINE, CA 92606

The State of California or its officers or agents shall not be responsible for the accuracy or completeness of electronic copies of this plan sheet.

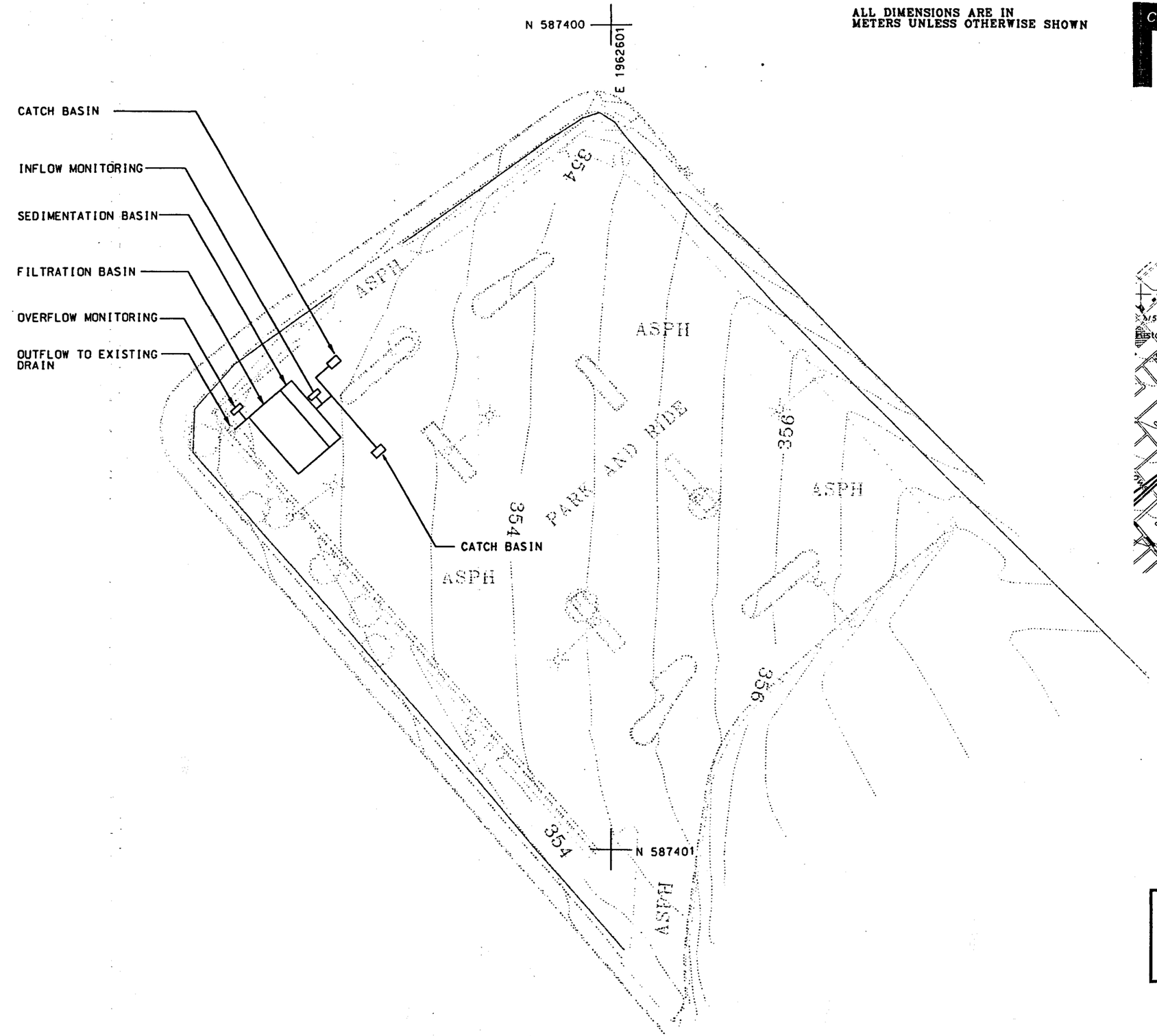

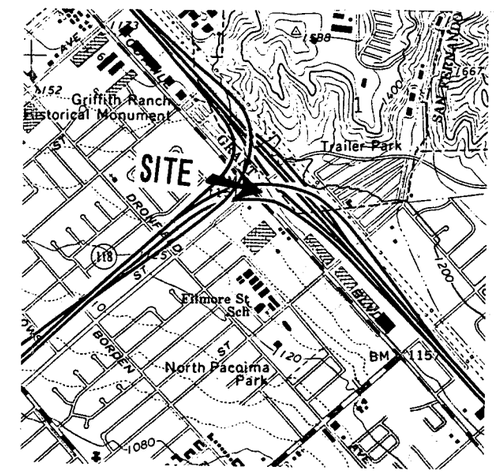

THE LKR GROUP
The L.K.R. Group, Inc.
Geotechnical Engineers
2341 205th Street, Suite 103
Torrance, CA 90501
Phone 310/320-5100

PAXTON PARK AND RIDE

SCALE 1:1000

FIGURE 6

DATE	REVISED BY	DATE	REVISED BY
2/97		2/97	

CALCULATED/DESIGNED BY
CHECKED BY
DESIGN OVERSIGHT

STATE OF CALIFORNIA - DEPARTMENT OF TRANSPORTATION
Caltrans

DIST	COUNTY	ROUTE	KILOMETER POST TOTAL PROJECT	SHEET NO.	TOTAL SHEETS
X	LA	605,91	X.XX		

REGISTERED CIVIL ENGINEER

PLANS APPROVAL DATE

X

REGISTERED PROFESSIONAL ENGINEER No. Exp. CIVIL STATE OF CALIFORNIA

BROWN AND CALDWELL
16735 VON KARMAN
IRVINE, CA 92606

The State of California or its officers or agents shall not be responsible for the accuracy or completeness of electronic copies of this plan sheet.

Caltrans Metric

	DATE	REVISED BY
	2/97	DATE REVISED

CALCULATED/DESIGNED BY

CHECKED BY

DESIGN OVERSIGHT

STATE OF CALIFORNIA - DEPARTMENT OF TRANSPORTATION

Caltrans

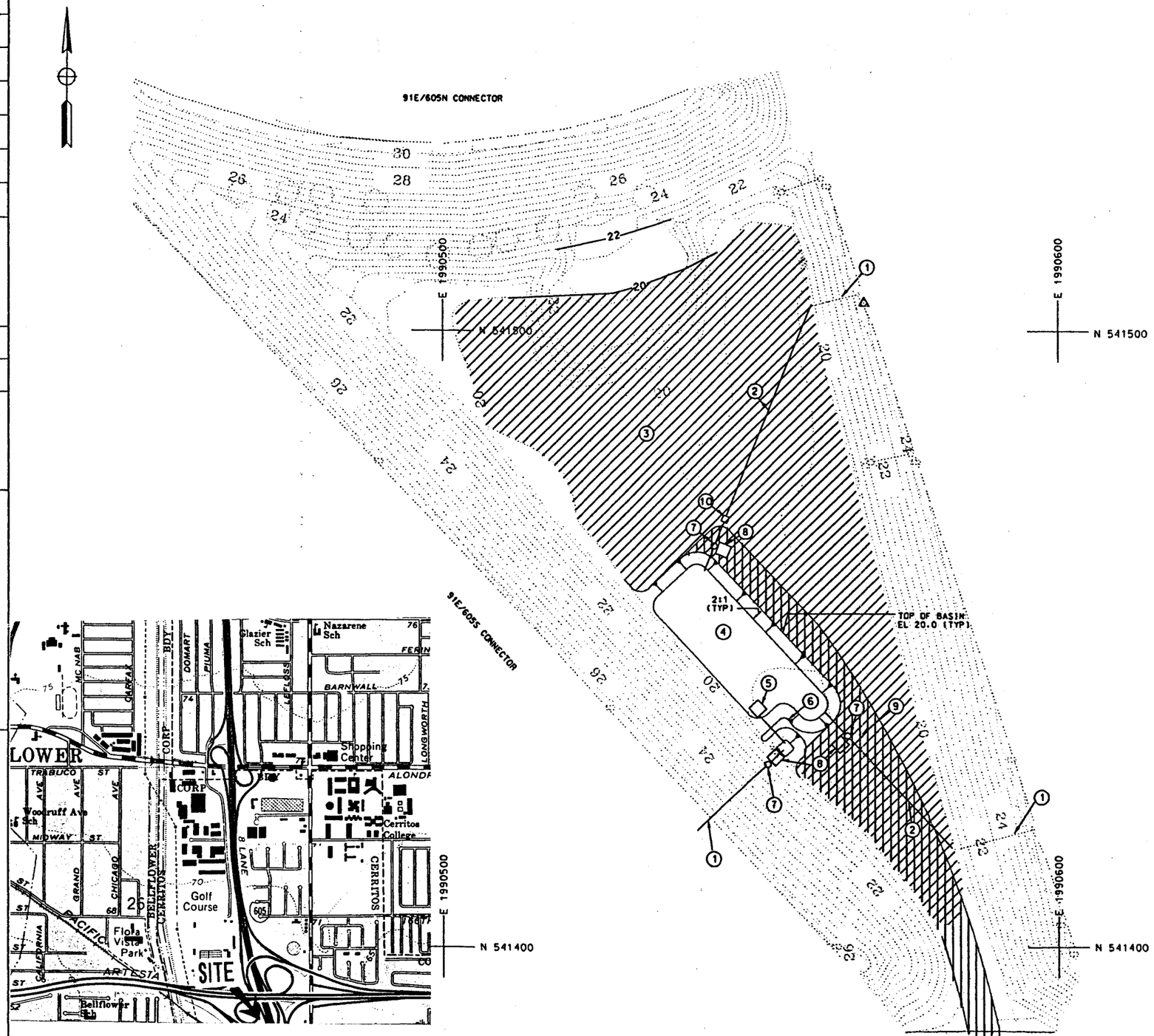

CONSTRUCTION NOTES

1. EXISTING DRAIN
2. EXTEND EXISTING DRAIN
3. PLACE APPROX .75M FILL TO THE APPROXIMATE LIMITS SHOWN. GRADE AT 1% MIN SLOPE TO BASIN.
4. DETENTION BASIN. APPROX 1M DEEP
5. OUTLET STRUCTURE
6. EMERGENCY SPILLWAY TO EXIST OUTLET
7. SAMPLING MANHOLE
8. CONCRETE PAD FOR SAMPLER
9. GRAVEL ACCESS ROAD
10. CATCH BASIN FOR ON-SITE RUNOFF

THE LKR GROUP

The L.K.R. Group, Inc.
Geotechnical Engineers
2341 205th Street, Suite 103
Torrance, CA 90501
Phone 310/320-5100

FIGURE 7

I-605/I-91 EXTENDED DETENTION BASIN

ALL DIMENSIONS ARE IN METERS UNLESS OTHERWISE SHOWN

Caltrans Metric

DIST	COUNTY	ROUTE	KILOMETER POST TOTAL PROJECT	SHEET NO.	TOTAL SHEETS
X	LA	605.91	X.XX		

REGISTERED CIVIL ENGINEER

PLANS APPROVAL DATE

X

REGISTERED PROFESSIONAL ENGINEER No. Exp. CIVIL STATE OF CALIFORNIA

BROWN AND CALDWELL
16735 VON KARMAN
IRVINE, CA 92606

The State of California or its officers or agents shall not be responsible for the accuracy or completeness of electronic copies of this plan sheet.

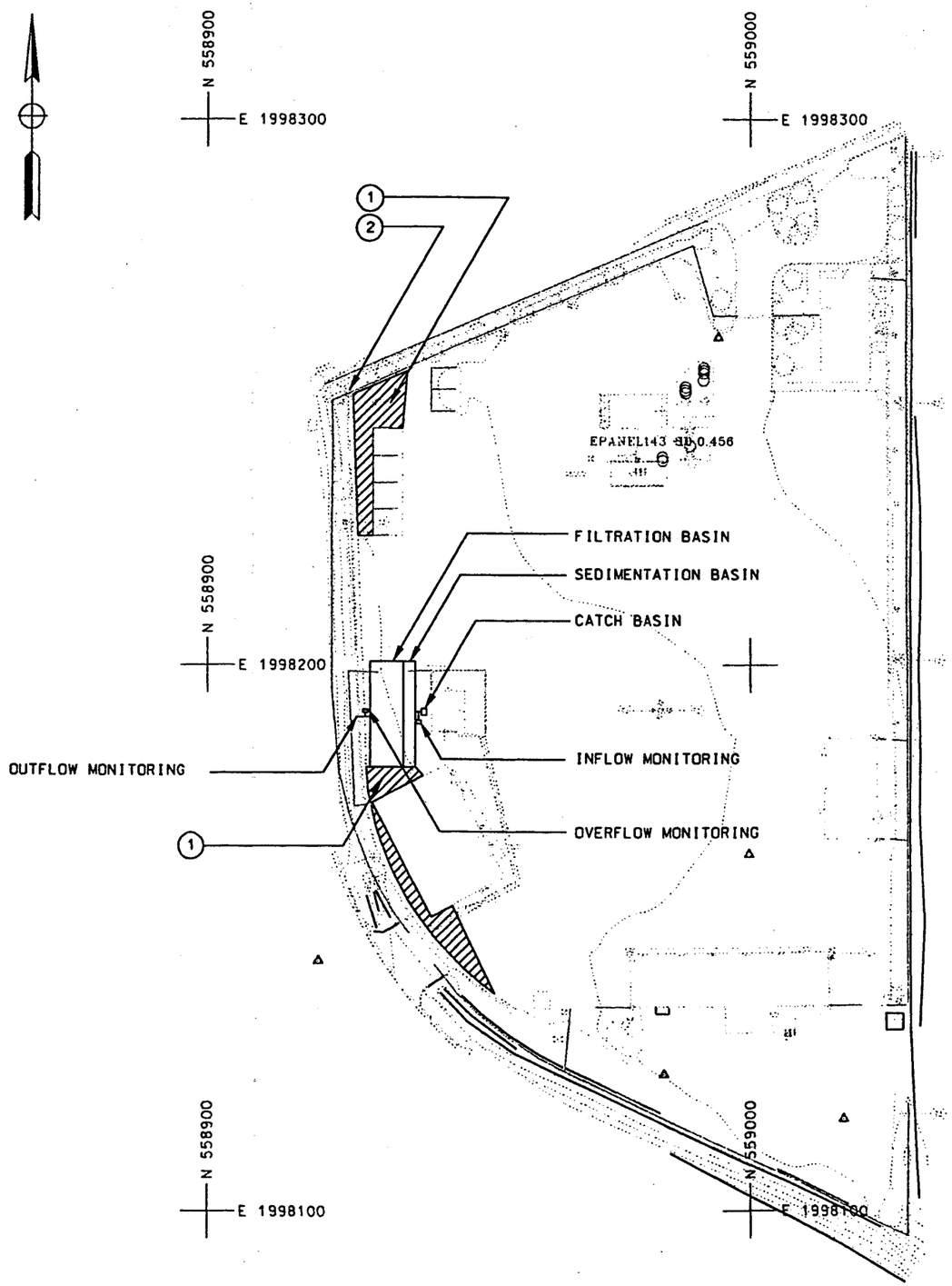

CONSTRUCTION NOTES

1. REGRADE SHADED AREA
2. PLUG EXISTING OUTLET TO STORMDRAIN

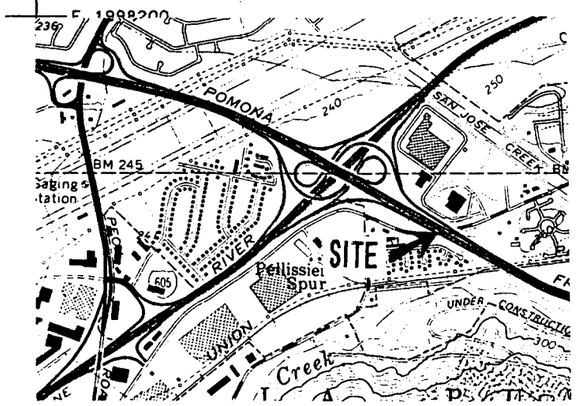

THE LKR GROUP
The L.K.R. Group, Inc.
Geotechnical Engineers
2341 205th Street, Suite 103
Torrance, CA 90501
Phone 310/320-5100

FIGURE 8

EASTERN REGIONAL MAINTENANCE STATION

SCALE 1:1000

STATE OF CALIFORNIA - DEPARTMENT OF TRANSPORTATION

Caltrans

DESIGN OVERSIGHT

CALCULATED/DESIGNED BY | DATE 2/97 | REVISED BY

CHECKED BY | 2/97 | DATE REVISED

EMAX
LABORATORIES, INC.
630 Maple Ave.
Torrance, CA 90503
Telephone: (310) 618-8889
Fax: (310) 618-0818

Date: 02-18-1998
EMAX Batch No.: 98B040

Attn: Mr. Steven Kolhoff

The L.K.R. Group, Inc.
2341 W. 205th. St., Suite 103
Torrance CA 90501

Subject: Laboratory Report
Project: Caltrans Dist. 11 SWR

Enclosed is the Laboratory report for samples received on 02/11/98. The data reported include :

Sample ID	Control #	Col Date	Matrix	Analysis
2SD PALOMAR/I-5	B040-02	02/10/98	Soil	Lead Dissolved Lead
3SD LACOSTA OFF	B040-03	02/10/98	Soil	Lead Dissolved Lead
4SD LACOSTA P&R	B040-04	02/10/98	Soil	Lead Dissolved Lead
5SD MANCHESTER E	B040-05	02/10/98	Soil	Lead Dissolved Lead
6D MANCHESTER W	B040-06	02/10/98	Soil	Lead Dissolved Lead
7D CARMEL V. RD.	B040-07	02/10/98	Soil	Lead Dissolved Lead
8D I-5/I-15	B040-08	02/10/98	Soil	Lead Dissolved Lead
9D MELROSE/78	B040-09	02/10/98	Soil	Lead Dissolved Lead
1SD CARLSBAD M.S.	B040-01	02/10/98	Soil	Lead Dissolved Lead

The results are summarized on the following pages.

Please feel free to call if you have any questions concerning these results.

Sincerely yours,

Kam Y. Pang, Ph.D.
Laboratory Director

98 B040 D1

CHAIN OF CUSTODY RECORD
REQUEST FOR ANALYSIS

DATE: 2/11/98
PAGE 1 OF 1

CKY incorporated
Environmental Services
1177 Quarry Lane, Suite-C
Pleasanton, CA 94566
Tel: 510-846-3188
Fax: 510-846-1236

CLIENT NAME: The LKR Group
ADDRESS: 2341 205th Street
Torrance, CA.
PHONE NO. 320-5100 FAX NO. 320-2118
PROJECT NAME: Caltrans Dist. 11 SWR
SEND REPORT TO: Steven Kolthoff

SAMPLER NAME/SIGNATURE

TURN AROUND TIME
NORMAL ☒
RUSH ☐

ANALYSES REQUIRED

	SAMPLE NUMBER	SAMPLING DATE/TIME		PRESER-VATIVE	CONTAINER SIZE/TYPE	SAMPLE DESCRIPTION WATER	SOIL	OTHER	418.1	M8015	8010/601	8020/602	8080/608	8240/624	8270/625	CAM Metals	6010 Lead							
1	1SD Carlsbad M.S.	2/10/98	11:35				X										X							
2	2SD Palomar/I-5	" "	11:50				X										X							
3	3SD Lacosta off	" "	13:25				X										X							
4	4SD Lacosta P&R	" "	14:00				X										X							
5	5SD Manchester E	" "	14:20				X										X							
6	6D Manchester W	" "	14:30				X										X							
7	7D Carmel V. Rd	" "	14:55				X										X							
8	8D I-5/I-15	" "	16:30				X										X							
9	9D Melrose/78	" "	17:00				X										X							

COMMENTS: T=3°C

Relinquished by: (Signature)	Date:	Received by: (Signature)	Date:	Relinquished by: (Signature)	Date:	Received by: (Signature)	Date:
[signature]	2/11/98	Thomas P Bailey	2/11/98	[signature]	2/11/98		
Company: LKR Group	Time: 8:10	Company: LKR GRP	Time: 8:10 AM	Company: CMAK	Time: 8:25	Company:	Time:

Storage/Disposal of Samples: Sample will be stored at CKY for 30 days at no charge and at $10/sample/month thereafter. Disposal of sample by the Laboratory will be charged at $10/sample.

SAMPLE RECEIPT FORM

				Reviews	
BCN:	98 BC4P	Date	2.11.98		
Client	LAR GROUP	Time	8:25 AM.	Sample Labeling	S. SITNIKOV
Project	Caltrans DIST. 11	Recipient	Celia Crave	SRF	CT 2-11-98.
				CRO	2/11/98

Type of Sample Delivery to EMAX		
☐ EMAX Courier	☑ Client Delivery	☐ Third Party/Airbill No.
By :		
Date :	SEE C.O.C.	
Time :		
Comments:		

COC Inspection (Check for presence)		
☑ Client Name	☑ Sampler Name/Signature	☑ Sampling Date/Time
☑ Address	☑ Courier Signature w/ Date & Time	☑ Analysis Required
☑ Tel # / FAX #	☑ TAT	☑ Sample Container
☑ Prj Name/Contact Person	☑ Sample ID	☑ Matrix
Safety Issue(s) ☑ None ☐	☐ High concentrations expected	☐ Superfund Site Samples
Comments:		

Packaging Inspection				
Container :	☑ Cooler ONE	☑ Box	☐	
Condition :	☐ Custody Seal NONE	☑ Intact	☐ Damaged	☐
Packaging:	☐ Bubble Pack	☐ Styro Foam	☐	☑ Sufficient
Temperature(s)	☑ ox. 3°C	☐	☐	☐
Comments:				

Sample Inspection				
Container:	☐ Custody Seal NONE	☑ Intact	☐ Damaged	☑ Appropriate
Identity:	☑ Client Sample ID	☑ Sampling Date/Time	☑ Sampler Initial	☑ Analysis
Preservation:	☐ NaOH [pH≥12]	☐ HNO_3 [pH≤2]	☐ H_2SO_4 [pH≤2]	☑ Holding Time OK
Sample:	☑ Sufficient	☐ Not enough(see comment)	☑ Appropriate	☐
Comment:				

Sample Control #	Client ID	Discrepancy	Corrective Action

METHOD 3050A/6010A
TOTAL LEAD BY ICP

CLIENT:	LKR	DATE COLLECTED:	02/10/98
PROJECT:	Caltrans Dist. 11 SWR	DATE RECEIVED:	02/11/98
BATCH NO.:	98B040	DATE EXTRACTED:	02/11/98
MATRIX:	SOIL	DATE ANALYZED:	02/11/98

SAMPLE ID	CONTROL NO	RESULT (mg/kg)	DL FACTOR	MOIST (%)	RL (mg/kg)
1SD CARLSBAD M.S.	B040-01	18.0	1	14.9	11.8
2SD PALOMAR/I-5	B040-02	ND	1	8.1	10.9
3SD LACOSTA OFF	B040-03	ND	1	16.8	12
4SD LACOSTA P&R	B040-04	150	1	14.9	11.8
5SD MANCHESTER E	B040-05	41.4	1	8.9	11
6D MANCHESTER W	B040-06	21.9	1	16.8	12
7D CARMEL V. RD.	B040-07	ND	1	12.0	11.4
8D I-5/I-15	B040-08	13.5	1	10.5	11.2
9D MELROSE/78	B040-09	ND	1	13.1	11.5
MBLK1S	IPB005SB	ND	1	NA	10

RL: Reporting Limit

EMAX QUALITY CONTROL DATA
MS ANALYSIS

CLIENT: LKR
PROJECT: Caltrans Dist. 11 SWR
METHOD: METHOD 3050A/6010A
MATRIX: SOIL
% MOISTURE: 13.1

BATCH NO.: 98B040
SAMPLE ID: I-5/I-605, SE
CONTROL NO.: B034-07

DATE RECEIVED: NA
DATE EXTRACTED: 02/11/98
DATE ANALYZED: 02/11/98

ACCESSION:

PARAMETER	SMPL RSLT (mg/kg)	SPIKE AMT (mg/kg)	MS RSLT (mg/kg)	MS % REC	QC LIMIT (%)
Lead	92.50	115.10	196.20	90	75-125

EMAX QUALITY CONTROL DATA
DUPLICATE ANALYSIS

CLIENT: LKR
PROJECT: Caltrans Dist. 11 SWR
THOD: METHOD 3050A/6010A
ΓRIX: SOIL
% MOISTURE: 13.1

BATCH NO.: 98B040
SAMPLE ID: I-5/I-605, SE
CONTROL NO.: B034-07

DATE RECEIVED: NA
DATE EXTRACTED: 02/11/98
DATE ANALYZED: 02/11/98

ACCESSION:

PARAMETER	SAMPLE (mg/kg)	DUP. SAMPLE (mg/kg)	RPD (%)	RPD LIMIT (%)
Lead	92.50	74.70	21	30

EMAX QUALITY CONTROL DATA
LCS/LCD ANALYSIS

CLIENT: LKR
PROJECT: Caltrans Dist. 11 SWR
THOD: METHOD 3050A/6010A
.TRIX: SOIL
% MOISTURE: NA

BATCH NO.: 988040
SAMPLE ID: LCS1S/LCD1S
CONTROL NO.: IPB005SL/C

DATE RECEIVED: NA
DATE EXTRACTED: 02/11/98
DATE ANALYZED: 02/11/98

ACCESSION:

PARAMETER	BLNK RSLT (mg/kg)	SPIKE AMT (mg/kg)	BS RSLT (mg/kg)	BS % REC	SPIKE AMT (mg/kg)	BSD RSLT (mg/kg)	BSD % REC	RPD %	QC LIMIT %	RPD LIMIT %
Lead	ND	100.00	88.70	89	100.00	89.80	90	1	75-125	30

METHOD 3005A/6010A
DISSOLVED LEAD BY ICP

CLIENT:	LKR	DATE COLLECTED:	02/10/98
PROJECT:	Caltrans Dist. 11 SWR	DATE RECEIVED:	02/11/98
BATCH NO.:	98B040	DATE EXTRACTED:	02/13/98
MATRIX:	WATER	DATE ANALYZED:	02/14/98

SAMPLE ID	CONTROL NO	RESULT (ug/L)	DILUTION FACTOR	RL (ug/L)
1SD CARLSBAD M.S.	B040-01	ND	1	100
2SD PALOMAR/I-5	B040-02	ND	1	100
3SD LACOSTA OFF	B040-03	ND	1	100
4SD LACOSTA P&R	B040-04	ND	1	100
5SD MANCHESTER E	B040-05	ND	1	100
6D MANCHESTER W	B040-06	ND	1	100
7D CARMEL V. RD.	B040-07	ND	1	100
8D I-5/I-15	B040-08	ND	1	100
9D MELROSE/78	B040-09	ND	1	100
MBLK1W	IPB007WB	ND	1	100

RL: Reporting Limit

EMAX QUALITY CONTROL DATA
LCS/LCD ANALYSIS

CLIENT: LKR
PROJECT: Caltrans Dist. 11 SWR
THOD: METHOD 3005A/6010A
ATRIX: WATER
% MOISTURE: NA

BATCH NO.: 98B040
SAMPLE ID: LCS1W/LCD1W
CONTROL NO.: IPB007WL/C

DATE RECEIVED: NA
DATE EXTRACTED: 02/13/98
DATE ANALYZED: 02/14/98

ACCESSION:

PARAMETER	BLNK RSLT (ug/L)	SPIKE AMT (ug/L)	BS RSLT (ug/L)	BS % REC	SPIKE AMT (ug/L)	BSD RSLT (ug/L)	BSD % REC	RPD %	QC LIMIT %	RPD LIMIT %
Lead	ND	1000.00	1140.00	114	1000.00	1090.00	109	4	75-125	20

EMAX QUALITY CONTROL DATA
MS ANALYSIS

CLIENT: LKR
PROJECT: Caltrans Dist. 11 SWR
METHOD: METHOD 3005A/6010A
MATRIX: WATER
% MOISTURE: NA

BATCH NO.: 98B040
SAMPLE ID: I-5/I-605, SE
CONTROL NO.: B034-07

DATE RECEIVED: NA
DATE EXTRACTED: 02/13/98
DATE ANALYZED: 02/14/98

ACCESSION:

PARAMETER	SMPL RSLT (ug/L)	SPIKE AMT (ug/L)	MS RSLT (ug/L)	MS % REC	QC LIMIT (%)
Lead	ND	1000.00	1050.00	105	75-125

EMAX QUALITY CONTROL DATA
DUPLICATE ANALYSIS

CLIENT: LKR
PROJECT: Caltrans Dist. 11 SWR
METHOD: METHOD 3005A/6010A
MATRIX: WATER
% MOISTURE: NA

BATCH NO.: 98B040
SAMPLE ID: I-5/I-605, SE
CONTROL NO.: B034-07

DATE RECEIVED: NA
DATE EXTRACTED: 02/13/98
DATE ANALYZED: 02/14/98

ACCESSION:

PARAMETER	SAMPLE (ug/L)	DUP. SAMPLE (ug/L)	RPD (%)	RPD LIMIT (%)
Lead	ND	ND	0	20

EMAX
LABORATORIES, INC.
630 Maple Ave.
Torrance, CA 90503
Telephone: (310) 618-8889
Fax: (310) 618-0818

Date: 02-18-1998
EMAX Batch No.: 98B034

Attn: Mr. Steven Kolhoff

The L.K.R. Group, Inc.
2341 W. 205th. St., Suite 103
Torrance CA 90501

Subject: Laboratory Report
Project: Caltrans Dist. 7 SWR

Enclosed is the Laboratory report for samples received on 02/10/98. The data reported include :

Sample ID	Control #	Col Date	Matrix	Analysis
CERRITOS M.S.	B034-01	02/09/98	Soil	Lead Dissolved Lead
CERRITOS FIRST	B034-02	02/09/98	Soil	Lead Dissolved Lead
CERRITOS 2ND.	B034-03	02/09/98	Soil	Lead Dissolved Lead
CERRITOS S.W.	B034-04	02/09/98	Soil	Lead Dissolved Lead
DEL AMO/CARSON	B034-05	02/09/98	Soil	Lead Dissolved Lead
I-5/I-605, SW	B034-06	02/09/98	Soil	Lead Dissolved Lead
I-5/I-605, SE	B034-07	02/09/98	Soil	Lead Dissolved Lead
VAN NUYS/I-210	B034-08	02/09/98	Soil	Lead Dissolved Lead
CARL/I-210	B034-09	02/09/98	Soil	Lead Dissolved Lead

The results are summarized on the following pages.

Please feel free to call if you have any questions concerning these results.

Sincerely yours,

Kam Y. Pang, Ph.D.
Laboratory Director

98B034 D6

CHAIN OF CUSTODY RECORD
REQUEST FOR ANALYSIS

DATE: Feb. 10, 1998
PAGE 1 OF 1

CKY incorporated
Environmental Services
1177 Quarry Lane, Suite-C
Pleasanton, CA 94566
Tel: 510-846-3188
Fax: 510-846-1236

CLIENT NAME: The LKR Group
ADDRESS: 2341 205th Street
Torrance CA.
PHONE NO. 320-5100 FAX NO. 320-2118
PROJECT NAME: Caltrans Dist. 7 SWR
SEND REPORT TO: Steven Kolthoff

SAMPLER NAME/SIGNATURE

TURN AROUND TIME: NORMAL ☒ RUSH ☐

ANALYSES REQUIRED

	SAMPLE NUMBER	SAMPLING DATE/TIME		PRESERVATIVE	CONTAINER SIZE/TYPE	SAMPLE DESCRIPTION WATER	SOIL	OTHER	418.1	M8015	8010/601	8020/602	8080/608	8240/624	8270/625	CAM Metals	6010 Lead
1	1 Cerritos M.S.	2/9/98	9:55		4 oz glass		X										X
2	2 Cerritos ~~Bad~~ First	" "	10:00		"		X										X
3	3 Cerritos 2nd	" "	10:10		"		X										X
4	4 Cerritos S.W.	" "	10:30		"		X										X
5	5 DeLAno/Carson	" "	10:45		"		X										X
6	6 I-5/I605 SW	" "	11:35		"		X										X
7	7 I-5/I-605 SE	" "	11:45		"		X										X
8	8) Van Nuys/I-210	" "	14:40		"		X										X
9	9) Carl /I-210	" "	15:15		"		X										X

COMMENTS:

FRESH FROM REFRIGERATOR - RTUS

Relinquished by: (Signature)	Date:	Received by: (Signature)	Date:	Relinquished by: (Signature)	Date:	Received by: (Signature)	Date:
[signature]	2/10/98	Mike Todd	2/10/98	Mike Todd	2/10/98	[signature]	2-10-98
Company: LKR Group	Time: 9:20	Company: LKR Group	Time: 9:20	Company: LKR Group	Time: 10:00	Company: EMAX	Time: 10:00

Storage/Disposal of Samples: Sample will be stored at CKY for 30 days at no charge and at $10/sample/month thereafter. Disposal of sample by the Laboratory will be charged at $10/sample.

SAMPLE RECEIPT FORM

BCN:	98B034	Date	2-10-98	Reviews	
Client	The LKR Group	Time	10:00 AM	Sample Labeling	[illegible]
Project	Caltrans DIST. 7 SWR	Recipient	CLINTON, T.	SRF	[illegible] 2-10-98
				CRO	[illegible] 2/10/98

Type of Sample Delivery to EMAX		
☐ EMAX Courier	☑ Client Delivery	☐ Third Party/Airbill No.
By :	SEE COC	
Date :		
Time :		
Comments:		

COC Inspection (Check for presence)		
☑ Client Name	☑ Sampler Name/Signature	☑ Sampling Date/Time
☑ Address	☑ Courier Signature w/ Date & Time	☑ Analysis Required
☑ Tel # / FAX #	☑ TAT	☑ Sample Container
☑ Prj Name/Contact Person	☑ Sample ID	☑ Matrix
Safety Issue(s) ☑ None ☐	☐ High concentrations expected	☐ Superfund Site Samples
Comments:		

Packaging Inspection				
Container :	☐ Cooler	☑ Box	☐	
Condition :	☐ Custody Seal NONE	☑ Intact	☐ Damaged	☐
Packaging:	☐ Bubble Pack	☐ Styro Foam	☐ NONE	☑ Sufficient
Temperature(s)	☑ RT.	☐	☐	☐
Comments: FRESH FROM. REFRIGERATOR - COLD				

Sample Inspection				
Container:	☐ Custody Seal NONE	☑ Intact	☐ Damaged	☑ Appropriate
Identity:	☑ Client Sample ID	☑ Sampling Date/Time	☑ Sampler Initial	☑ Analysis
Preservation:	☐ NaOH [pH≥12]	☐ HNO_3 [pH≤2]	☐ H_2SO_4 [pH≤2]	☑ Holding Time OK
Sample:	☑ Sufficient	☐ Not enough(see comment)	☑ Appropriate	☐
Comment:				

Sample Control #	Client ID	Discrepancy	Corrective Action

METHOD 3050A/6010A
TOTAL LEAD BY ICP

CLIENT:	LKR	DATE COLLECTED:	02/09/98
PROJECT:	Caltrans Dist. 7 SWR	DATE RECEIVED:	02/10/98
BATCH NO.:	98B034	DATE EXTRACTED:	02/11/98
MATRIX:	SOIL	DATE ANALYZED:	02/11/98

SAMPLE ID	CONTROL NO	RESULT (mg/kg)	DL FACTOR	MOIST (%)	RL (mg/kg)
CERRITOS M.S.	B034-01	132	1	19.9	12.5
CERRITOS FIRST	B034-02	29.0	1	19.1	12.4
CERRITOS 2ND.	B034-03	16.0	1	23.6	13.1
CERRITOS S.W.	B034-04	11.6	1	9.6	11.1
DEL AMO/CARSON	B034-05	120	1	17.3	12.1
I-5/I-605, SW	B034-06	54.0	1	11.8	11.3
I-5/I-605, SE	B034-07	92.5	1	13.1	11.5
VAN NUYS/I-210	B034-08	ND	1	16.0	11.9
CARL/I-210	B034-09	20.3	1	20.0	12.5
MBLK1S	IPB005SB	ND	1	NA	10

RL: Reporting Limit

EMAX QUALITY CONTROL DATA
DUPLICATE ANALYSIS

CLIENT: LKR
PROJECT: Caltrans Dist. 7 SWR
METHOD: METHOD 3050A/6010A
MATRIX: SOIL
% MOISTURE: 13.1

BATCH NO.: 98B034
SAMPLE ID: I-5/I-605, SE
CONTROL NO.: B034-07

DATE RECEIVED: 02/10/98
DATE EXTRACTED: 02/11/98
DATE ANALYZED: 02/11/98

ACCESSION:

PARAMETER	SAMPLE (mg/kg)	DUP. SAMPLE (mg/kg)	RPD (%)	RPD LIMIT (%)
Lead	92.50	74.70	21	30

EMAX QUALITY CONTROL DATA
MS ANALYSIS

CLIENT: LKR
PROJECT: Caltrans Dist. 7 SWR
METHOD: METHOD 3050A/6010A
MATRIX: SOIL
% MOISTURE: 13.1

==========

BATCH NO.: 98B034
SAMPLE ID: I-5/I-605, SE
CONTROL NO.: B034-07

DATE RECEIVED: 02/10/98
DATE EXTRACTED: 02/11/98
DATE ANALYZED: 02/11/98

ACCESSION:

PARAMETER	SMPL RSLT (mg/kg)	SPIKE AMT (mg/kg)	MS RSLT (mg/kg)	MS % REC	QC LIMIT (%)
Lead	92.50	115.10	196.20	90	75-125

EMAX QUALITY CONTROL DATA
LCS/LCD ANALYSIS

CLIENT: LKR
PROJECT: Caltrans Dist. 7 SWR
METHOD: METHOD 3050A/6010A
MATRIX: SOIL
% MOISTURE: NA

BATCH NO.: 988034
SAMPLE ID: LCS1S/LCD1S
CONTROL NO.: IPB005SL/C

DATE RECEIVED: NA
DATE EXTRACTED: 02/11/98
DATE ANALYZED: 02/11/98

ACCESSION:

PARAMETER	BLNK RSLT (mg/kg)	SPIKE AMT (mg/kg)	BS RSLT (mg/kg)	BS % REC	SPIKE AMT (mg/kg)	BSD RSLT (mg/kg)	BSD % REC	RPD %	QC LIMIT %	RPD LIMIT %
Lead	ND	100.00	88.70	89	100.00	89.80	90	1	75-125	30

METHOD 3005A/6010A
DISSOLVED LEAD BY ICP

CLIENT:	LKR	DATE COLLECTED:	02/09/98
PROJECT:	Caltrans Dist. 7 SWR	DATE RECEIVED:	02/10/98
BATCH NO.:	98B034	DATE EXTRACTED:	02/13/98
MATRIX:	WATER	DATE ANALYZED:	02/14/98

SAMPLE ID	CONTROL NO	RESULT (ug/L)	DILUTION FACTOR	RL (ug/L)
CERRITOS M.S.	B034-01	ND	1	100
CERRITOS FIRST	B034-02	ND	1	100
CERRITOS 2ND.	B034-03	ND	1	100
CERRITOS S.W.	B034-04	ND	1	100
DEL AMO/CARSON	B034-05	ND	1	100
I-5/I-605, SW	B034-06	ND	1	100
I-5/I-605, SE	B034-07	ND	1	100
VAN NUYS/I-210	B034-08	ND	1	100
CARL/I-210	B034-09	ND	1	100
MBLK1W	IPB007WB	ND	1	100

RL: Reporting Limit
DATE DIGESTED: 02/13/98

EMAX QUALITY CONTROL DATA
DUPLICATE ANALYSIS

CLIENT: LKR
PROJECT: Caltrans Dist. 7 SWR
METHOD: METHOD 3005A/6010A
MATRIX: WATER
% MOISTURE: NA

BATCH NO.: 98B034
SAMPLE ID: I-5/I-605, SE
CONTROL NO.: B034-07

DATE RECEIVED: 02/10/98
DATE EXTRACTED: 02/13/98
DATE ANALYZED: 02/14/98

ACCESSION:

PARAMETER	SAMPLE (ug/L)	DUP. SAMPLE (ug/L)	RPD (%)	RPD LIMIT (%)
Lead	ND	ND	0	20

EMAX QUALITY CONTROL DATA
MS ANALYSIS

CLIENT: LKR
PROJECT: Caltrans Dist. 7 SWR
METHOD: METHOD 3005A/6010A
MATRIX: WATER
% MOISTURE: NA

==========

BATCH NO.: 98B034
SAMPLE ID: I-5/I-605, SE
CONTROL NO.: B034-07

DATE RECEIVED: 02/10/98
DATE EXTRACTED: 02/13/98
DATE ANALYZED: 02/14/98

ACCESSION:

PARAMETER	SMPL RSLT (ug/L)	SPIKE AMT (ug/L)	MS RSLT (ug/L)	MS % REC	QC LIMIT (%)
Lead	ND	1000.00	1050.00	105	75-125

EMAX QUALITY CONTROL DATA
LCS/LCD ANALYSIS

CLIENT: LKR
PROJECT: Caltrans Dist. 7 SWR
THOD: METHOD 3005A/6010A
.TRIX: WATER
% MOISTURE: NA

BATCH NO.: 98B034
SAMPLE ID: LCS1W/LCD1W
CONTROL NO.: IPB007WL/C

DATE RECEIVED: NA
DATE EXTRACTED: 02/13/98
DATE ANALYZED: 02/14/98

ACCESSION:

PARAMETER	BLNK RSLT (ug/L)	SPIKE AMT (ug/L)	BS RSLT (ug/L)	BS % REC	SPIKE AMT (ug/L)	BSD RSLT (ug/L)	BSD % REC	RPD %	QC LIMIT %	RPD LIMIT %
Lead	ND	1000.00	1140.00	114	1000.00	1090.00	109	4	75-125	20

Appendix A.3
Construction Plans

Project No. 1
District 7

INDEX OF SHEETS

DIST	COUNTY	ROUTE	KILOMETER POST TOTAL PROJECT	SHEET No	TOTAL SHEETS
07	LA	210, 605	VAR	1	38

STATE OF CALIFORNIA

DEPARTMENT OF TRANSPORTATION

PROJECT PLANS FOR CONSTRUCTION ADJACENT TO

STATE HIGHWAY

IN LOS ANGELES COUNTY AT VARIOUS LOCATIONS

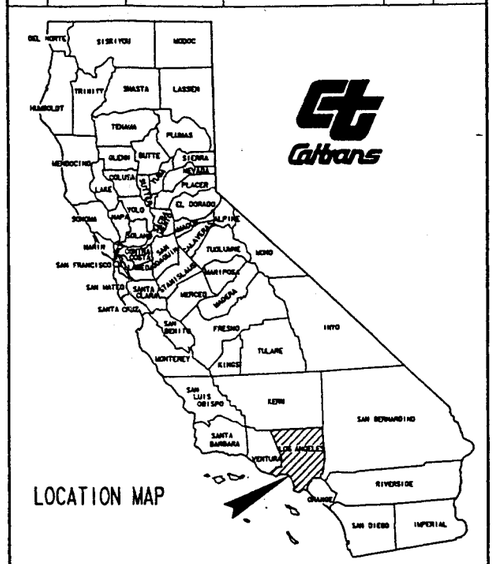

The State of California or its officers or agents shall not be responsible for the accuracy or completeness of electronic copies of this plan sheet.

Caltrans Metric

To be supplemented by Standard Plans dated July, 1997

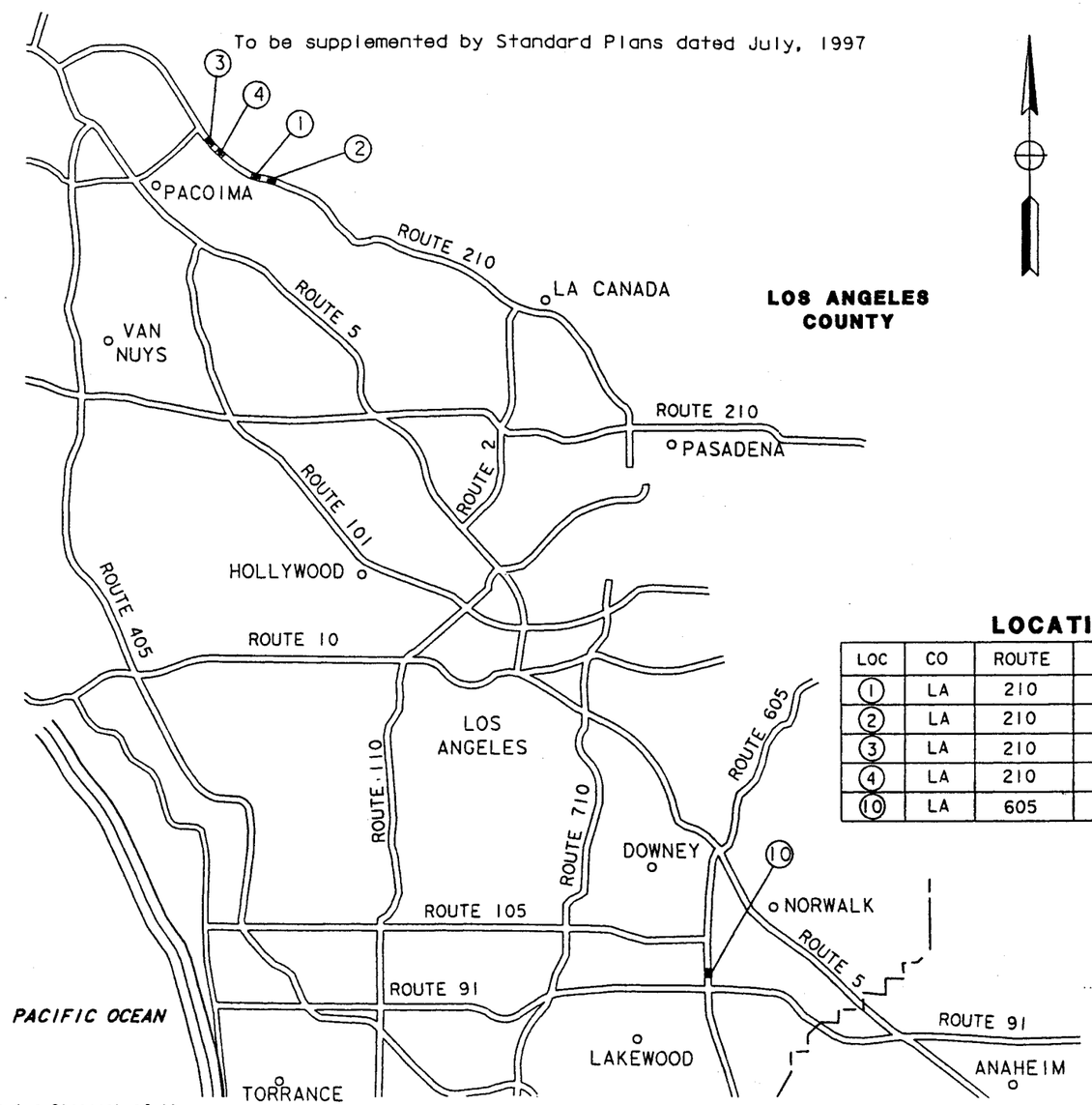

LOCATION OF CONSTRUCTION

LOC	CO	ROUTE	KP	PM	DESCRIPTION
1	LA	210			210 - 13(1), W side of Orcas Ave
2	LA	210			210 - 13(2), E of Orcas Ave
3	LA	210			210 - 5(3), E of Filmore St
4	LA	210			210 - 6(1), E of Van Nuys Blvd
10	LA	605			N 605/91 (S) Interchange

Project Engineer
Registered Civil Engineer

Plans Approval Date

REGISTERED PROFESSIONAL ENGINEER No. Exp. CIVIL STATE OF CALIFORNIA

The Contractor shall possess the Class (or Classes) of license as specified in the 'Notice to Contractors' on page 1 of the Special Provisions.

Contract No.

Contract No.

PROJECT LANDSCAPE ARCHITECT | DATE | DESIGN LANDSCAPE ARCHITECT | DATE | APPROVAL RECOMMENDED BY

LAST REVISION 00-00-00 | DATE PLOTTED => $DATE | TIME PLOTTED => $TIME

FOR REDUCED PLANS ORIGINAL SCALE IS IN MILLIMETERS 0 20 40 60 80 | USERNAME => $USER | DGN FILE => $REQUEST | CU 00000 | EA 910202

Progress Prints - Monterey Wilson - 03-18-98

DIST.	COUNTY	ROUTE	KILOMETER POST TOTAL PROJECT	SHEET NO.	TOTAL SHEETS

The State of California or its officers or agents shall not be responsible for the accuracy or completeness of electronic copies of this plan sheet.

To accompany plans dated _____

GENERAL ROAD WORK

MISCELLANEOUS

- ■ A10A Abbreviations
- ■ A10B Symbols
- □ A20A Pavement Markers and Traffic Lines, Typical Details
- □ A20B Pavement Markers and Traffic Lines, Typical Details
- □ A20C Pavement Markers and Traffic Lines, Typical Details
- □ A20D Pavement Markers and Traffic Lines, Typical Details
- □ A24A Pavement Markings- Arrows
- □ A24B Pavement Markings- Arrows
- □ A24C Pavement Markings- Symbols and Numerals
- □ A24D Pavement Markings- Words
- □ A24E Pavement Markings- Words and Crosswalks
- □ A35A Portland Cement Concrete Paving Details
- □ A40 Rumble Strip Details
- □ A62A Excavation and Backfill- Miscellaneous Details
- □ A62B Limits of Payment for Excavation and Backfill Bridge- Surcharge and Wall
- □ A62C Limits of Payment for Excavation and Backfill- Bridge
- □ A62D Excavation and Backfill- Concrete Pipe Culverts
- □ A62E Excavation and Backfill- Cast-In-Place Reinforced Concrete Box and Arch Culverts
- ■ A62F Excavation and Backfill- Metal and Plastic Culverts
- □ A73A Object Markers
- □ A73B Markers
- □ A73C Delineators, Channelizers and Barricades
- □ A74 Survey Monuments
- □ A75A Concrete Barrier Type 50
- □ A75B Concrete Barrier Type 50E
- □ A75D Concrete Headlight Glare Screen
- □ RSP A76A CONCRETE BARRIER TYPE 60
- □ A76B Concrete Barrier Type 60
- □ A76C Concrete Barrier Type 60E
- □ A76D Concrete Barrier Type 60G
- □ A76E Concrete Barrier Type 60G
- □ A76F Concrete Barrier Type 60GE
- □ RSP A76G CONCRETE BARRIER TYPE 60S
- □ A76H Concrete Barrier Type 60S
- □ A76I Concrete Barrier Type 60SE
- □ A77A Metal Beam Guard Railing
- □ A77B Metal Beam Guard Railing- Standard Hardware
- □ RSP A77C METAL BEAM GUARD RAILING - POST AND BLOCKS
- □ A77D Guard Railing Flares
- □ A77E Guard Railing Flares
- □ A77F Metal Beam Guard Railing- Miscellaneous Details
- □ A77G Guard Railing End Anchors (Breakaway)
- □ A77GA Anchor Assembly (Breakaway, Type M)-Hardware and Post Details
- □ A77H Guard Railing End Anchors- Breakaway Hardware
- □ A77I Barrier and Guard Railing End Anchors
- □ A77J Guard Railing Connections to Bridge Railings, Retaining Walls and Abutments
- □ A77K Guard Railing Connections to Bridge Sidewalks and Curbs
- □ A78A Thrie Beam Barrier
- □ A78B Thrie Beam Barrier
- □ A78C Thrie Beam Barrier- Standard Hardware
- □ A78D Thrie Beam Barrier- Miscellaneous Details
- □ A78E Thrie Beam Barrier- End Anchors
- □ A78F Thrie Beam Barrier Connections to Bridge Railing
- □ A78G Thrie Beam Barrier Connections to Bridge Curbs, Retaining Walls and Abutments
- □ A78H Thrie Beam Barrier Connections to Concrete Barrier Type 50
- □ A78I Thrie Beam Barrier Connections to Concrete Barrier Type 60
- ■ A81 Crash Cushion, Sand Filled
- □ A83 Portable Scale Pad and Approach Slab Details
- ■ A85 Chain Link Fence
- □ A86 Barbed Wire and Wire Mesh Fences
- ■ A87 Curbs, Dikes and Driveways
- □ A88 Curb Ramp Details
- □ A90 Accessible Parking

CRIB WALLS

- □ C7A Reinforced Concrete Crib Wall- Battered Wall- Types A,B and C
- □ C7B Reinforced Concrete Crib Wall- Battered Wall- Types D,E and F
- □ C7C Reinforced Concrete Crib Wall- Vertical Wall- Types A,B and C
- □ C7D Reinforced Concrete Crib Wall- Vertical Wall- Types D,E and F
- □ RSP C7E REINFORCED CONCRETE CRIB WALL- TYPES A,B,C,D,E AND F-HEADER AND STRECHER DETAILS
- □ RSP C7F DESIGN DATA FOR REINFORCED CONCRETE CRIB WALL FOUNDATION PRESSURE- BATTERED WALL
- □ RSP C7G REINFORCED CONCRETE CRIB WALL FOUNDATION PRESSURE- VERTICAL WALL
- □ C8A Steel Crib Wall- Construction Details
- □ C8B Steel Crib Wall- Design Data
- □ RSP C8C STEEL CRIB WALL- DESIGN DATA
- □ C9A Timber Crib Wall- Types A,B,C and D
- □ RSP C9B TIMBER CRIB WALL- TYPES A,B,C AND D-DESIGN DATA

DRAINAGE

- □ D72 Drainage Inlets
- ■ D73 Drainage Inlets
- □ D74A Drainage Inlets
- □ D74B Drainage Inlets
- ■ D74C Drainage Inlet Details
- D75 IS DELETED AND REPLACED WITH NSP D75A. NSP D75B AND NSP D75C)
- ■ RSP D77A Grate Details
- □ D77B Bicycle Proof Grate Details
- □ D77C Alternative Hinged Cover for Type OL and OS Inlets and Trash Rack for Type OCP Inlet
- □ D78 Gutter Depressions
- □ D79 Precast Reinforced Concrete Pipe- Direct Design Method
- □ D80 Cast-In-Place Reinforced Concrete Single Box Culvert
- □ D81 Cast-In-Place Reinforced Concrete Double Box Culvert
- □ D82 Cast-In-Place Reinforced Concrete Box Culvert Miscellaneous Details
- □ D84 Box Culvert Wingwalls- Types A,B and C
- □ RSP D85 BOX CULVERT WINGWALLS- TYPES D AND E
- □ D86A Box Culvert Warped Wingwalls
- □ D86B Pipe Culvert Headwalls, Endwalls and Warped Wingwalls
- □ D86C Arch Culvert Headwalls, Endwalls and Warped Wingwalls
- □ D87A Overside Drains
- □ D87B Overside Drains
- □ D87C Underdrains
- □ D88 Construction Loads on Culverts
- □ D88A Strut Details for Structural Steel Plate Pipes, Arches, and Vehicular Undercrossings
- □ D89 Pipe Headwalls
- □ D90 Pipe Culvert Headwalls, Endwalls and Wingwalls-Types A,B and C
- □ D93A Pipe Riser Connections
- □ D93B Drainage Inlet Riser Connections
- □ D93C Pipe Riser with Debris Rack Cage
- □ D94A Metal and Plastic Flared End Sections
- □ D94B Concrete Flared End Sections
- □ D95 Concrete Arch Culverts
- □ D97A Corrugated Metal Pipe Coupling Details No. 1- Annular Coupling Band Bar and Strap and Angle Connectors
- □ D97B Corrugated Metal Pipe Coupling Details No. 2- Hat Band Coupler and Flange Details
- □ D97C Corrugated Metal Pipe Coupling Details No. 3- Helical and Universal Couplers
- □ D97D Corrugated Metal Pipe Coupling Details No. 4- Hugger Coupling Bands
- □ D97E Corrugated Metal Pipe Coupling Details No. 5- Standard Joint
- □ D97F Corrugated Metal Pipe Coupling Details No. 6- Positive Joint
- □ D97G Corrugated Metal Pipe Coupling Details No. 7- Positive Joints and Downdrains
- □ D97H Reinforced Concrete Pipe or Non-Reinforced Concrete Pipe Standard and Positive Joints
- □ D98A Slotted Corrugated Steel Pipe Drain Details
- □ D98B Slotted Corrugated Steel Pipe Drain Details
- □ D99A Structural Section Drainage System Details
- □ D99B Edge Drain Outlet and Vent Details
- □ D99C Edge Drain Cleanout and Vent Details
- □ D99D Cross Drain Interceptor Details

HIGHWAY PLANTING

- □ H1 Planting and Irrigation- Abbreviations
- □ RSP H2 PLANTING AND IRRIGATION- SYMBOLS
- □ H3 Planting and Irrigation- Details
- □ H4 Planting and Irrigation- Details
- □ H5 Planting and Irrigation- Details
- □ H6 Planting and Irrigation- Details
- □ H7 Planting and Irrigation- Details
- □ H8 Planting and Irrigation- Details

TEMPORARY FACILITIES

- □ T1 Temporary Crash Cushion, Sand Filled
- ■ T2 Temporary Crash Cushion, Sand Filled
- ■ T3 Temporary Railing (Type K)
- □ T4 Temporary Traffic Screen
- □ T5 Temporary Terminal Section (Type K)
- □ T7 Construction Project Funding Identification Signs
- □ T10 Traffic Control System for Lane Closure on Freeways and Expressways
- □ T10A Traffic Control System for Lane and Complete Closures on Freeways and Expressways
- □ T11 Traffic Control System for Lane Closure on Multilane Conventional Highways
- □ T12 Traffic Control System for Lane Closure on Multilane Conventional Highways
- □ T13 Traffic Control System for Lane Closure on Two Lane Conventional Highways
- □ T14 Traffic Control System for Ramp Closures
- □ T15 Traffic Control System for Moving Lane Closure on Multilane Highways
- □ T16 Traffic Control System for Moving Lane Closure on Multilane Highways
- □ T17 Traffic Control System for Moving Lane Closure on Two Lane Highways

BRIDGE

- □ BO-1 Bridge Details
- ■ BO-3 Bridge Details
- □ BO-5 Bridge Details
- □ BO-13 Bridge Details
- □ B2-3 400 mm Cast-In-Drilled-Hole Concrete Pile
- □ B2-5 Pile Details- Class 400 and Class 625
- □ B2-6 Pile Details- Class 400C and Class 625C
- □ B2-8 Pile Details- Class 900 and Class 900C
- □ B2-9 Load Test Pile Details (1)
- □ B2-10 Load Test Pile Details (2)
- □ B2-11 Load Test Pile Details (3)
- ■ RSP B3-1 RETAINING WALL TYPE 1- H=1200 THROUGH 9100 mm
- □ B3-2 Retaining Wall Type 1- H=9700 Through 10 900 mm
- □ RSP B3-3 RETAINING WALL- TYPE 1A
- □ B3-4 Retaining Wall- Type 2
- □ B3-5 Counterfort Retaining Wall- Type 3
- □ B3-6 Counterfort Retaining Wall- Type 4
- □ RSP B3-7 RETAINING WALL- TYPE 5
- ■ RSP B3-8 RETAINING WALL DETAILS No. 1
- ■ B3-9 Retaining Wall Details No. 2
- □ B3-11 Retaining Wall Type 6- 1829 mm Maximum
- □ B6-1 T-Beam Details
- □ B6-10 Utility Openings, T-Beam
- □ B6-21 Joint Seals (Maximum Movement Rating = 50 mm)
- □ B7-1 Box Girder Details
- □ B7-5 Deck Drains
- □ B7-6 Deck Drains- Type D-1 and D-2
- □ B7-10 Utility Opening- Box Girder
- □ B7-11 Utility Details
- □ B8-5 Cast-In-Place Prestressed Girder Details
- □ B11-7 Chain Link Railing
- □ B11-47 Cable Railing
- □ B11-51 Tubular Hand Railing
- □ B11-52 Chain Link Railing Type 7
- □ B11-53 Concrete Barrier Type 25
- □ B11-54 Concrete Barrier Type 26

SHEET 1 OF 2

STANDARD PLANS LIST

(July,1997 Edition)

REVISED DECEMBER 4, 1997

WEB SITE ADDRESS: http://www.dot.ca.gov/hq/esc/projplan/ppintro.htm

DATE PLOTTED =¢ $DATE
TIME PLOTTED =¢ $TIME

The Standard Plan sheets applicable to this contract include, but are not limited to those indicated by a marked box.
The Revised Standard Plans (RSP) and New Standard Plans (NSP) which apply to this contract are included as individual sheets of the project plans.

USERNAME =¢ $USER
DGN FILE =¢ $REQUEST

CONTRACT NO.

DIST.	COUNTY	ROUTE	KILOMETER POST TOTAL PROJECT	SHEET NO.	TOTAL SHEETS

The State of California or its officers or agents shall not be responsible for the accuracy or completeness of electronic copies of this plan sheet.

To accompany plans dated _____

- ☐ B13-1 Slope Protection Details
- ☐ B14-1 Structural Steel Plate Vehicular Undercrossing
- ☐ B14-3 Communication and Sprinkler Control Conduit (Conduit less than size 103)
- ☐ B14-4 Water Supply Line (Bridge) (Pipe less than NPS 4)
- ☐ B14-5 Water Supply Line (Details) (Pipe less than NPS 4)

ROADSIDE SIGNS

- ■ RS1 Roadside Signs. Typical Installation Details No. 1
- ■ RS2 Roadside Signs. Wood Post. Typical Installation Details No. 2
- ■ RS3 Roadside Signs. Laminated Wood Box Post. Typical Installation Details No. 3
- ☐ RS4 Roadside Signs. Typical Installation Details No. 4

OVERHEAD SIGNS

OVERHEAD SIGNS-TRUSS

- ☐ S1 Overhead Signs- Truss. Instructions and Examples
- ☐ S2 Overhead Signs- Truss. Single Post Type. Post Types 11 thru V11
- ☐ S3 Overhead Signs- Truss. Two Post Type. Post Types 1-S thru V11-S
- ☐ RSP S4 OVERHEAD SIGNS- TRUSS. SINGLE POST TYPE. STRUCTURAL FRAME MEMBERS
- ☐ S5 Overhead Signs- Truss. Two Post Type. Structural Frame Members
- ☐ S6 Overhead Signs- Truss. Structural Frame Details
- ☐ S7 Overhead Signs- Truss. Frame Juncture Details
- ☐ S8A Overhead Signs- Steel Frame Removable Sign Panel Frames
- ☐ S8B Overhead Signs- Removable Sign Panel Frames. Overhead Formed Panel Mounting Details
- ☐ S8C Overhead Signs- Truss. Sign Panel Mounting Details. Laminated Panel- Type A
- ☐ S8D Overhead Signs- Truss. Removable Sign Panel Frames 2.794 m and 3.048 m Sign Panels
- ☐ S9 Overhead Signs- Walkway Details No. 1
- ☐ S10 Overhead Signs- Walkway Details No. 2
- ☐ S11 Overhead Signs- Walkway Safety Railing Details
- ☐ S13 Overhead Signs- Truss Pile Foundation

OVERHEAD SIGNS-LIGHTWEIGHT

- ☐ S14A Overhead Signs- Lightweight Balanced-Single Steel Post Connection and Mounting Details
- ☐ S14B Overhead Signs- Lightweight Balanced-Single Steel Post Details
- ☐ S15 Overhead Signs- Lightweight. Type A. Connection Details
- ☐ S16 Overhead Signs- Lightweight. Type B. Connection Details
- ☐ S17 Overhead Signs- Lightweight. Type C. Connection Details
- ☐ S18A Overhead Signs- Lightweight. Sign Panel Mounting Details. Laminated Panel- Type A
- ☐ S18B Overhead Signs- Lightweight. Light Fixture Mounting Details
- ☐ S20A Overhead Signs- Lightweight Post Details
- ☐ S20B Overhead Signs- Lightweight Foundation Details

OVERHEAD SIGNS-BOX BEAM CLOSED TRUSS ALTERNATIVE

- ☐ S39 Overhead Signs- Box Beam Closed Truss. Foundation Details
- ☐ S40A Overhead Signs- Box Beam Closed Truss. Two Post Type Frame Members
- ☐ S40B Overhead Signs- Box Beam Closed Truss. Single and Two Post Type. General Frame Details
- ☐ S40C Overhead Signs- Box Beam Closed Truss. Ribbed Sheet Metal Details
- ☐ S40D Overhead Signs- Box Beam Closed Truss. Two Post Type. Frame Details
- ☐ S40E Overhead Signs- Box Beam Closed Truss. Two Post Type. Frame Juncture Details
- ☐ S40F Overhead Signs- Box Beam Closed Truss. Two Post Type. Post Details
- ☐ S40G Overhead Signs- Box Beam Closed Truss. Single Post Type. Frame Members
- ☐ S40H Overhead Signs- Box Beam Closed Truss. Single Post Cantilever. Frame Details
- ☐ S40I Overhead Signs- Box Beam Closed Truss. Single Post Cantilever. Frame Juncture Details
- ☐ S40J Overhead Signs- Box Beam Closed Truss. Single Post Cantilever. Post Details
- ☐ S40K Overhead Signs- Box Beam Closed Truss. Single Post Butterfly. Frame Details
- ☐ S40L Overhead Signs- Box Beam Closed Truss. Single Post Butterfly. Frame Juncture Details
- ☐ S40M Overhead Signs- Box Beam Closed Truss. Single Post Butterfly. Post Details

OVERHEAD SIGNS-TUBULAR

- ☐ **S40N** Overhead Signs- Tubular. Instructions and Examples
- ☐ S40P Overhead Signs- Tubular. Single Post Type. Layout and Pipe Selection
- ☐ S40Q Overhead Signs- Tubular. Two Post Type. Layout and Pipe Selection
- ☐ S40R Overhead Signs- Tubular. Structural Frame Details No. 1
- ☐ S40S Overhead Signs- Tubular. Structural Frame Details No. 2
- ☐ S40T Overhead Signs- Tubular. Foundation Details

SIGNALS, LIGHTING AND ELECTRICAL SYSTEMS

- ☐ ES-1A Signal. Lighting and Electrical Systems- Symbols and Abbreviations
- ☐ ES-1B Signal. Lighting and Electrical Systems- Symbols and Abbreviations
- ☐ ES-2A Signal. Lighting and Electrical Systems- Service Equipment
- ☐ ES-2B Signal. Lighting and Electrical Systems- Service Equipment
- ☐ ES-2C Signal. Lighting and Electrical Systems- Service Equipment Notes
- ☐ ES-2D Signal. Lighting and Electrical Systems- Service Equipment and Typical Wiring Diagram. Type A
- ☐ ES-2E Signal. Lighting and Electrical Systems- Service Equipment and Typical Wiring Diagram. Type B
- ☐ ES-2F Signal. Lighting and Electrical Systems- Service Equipment and Typical Wiring Diagram. Type C
- ☐ ES-3A Signal. Lighting and Electrical Systems- Signal Heads and Mountings
- ☐ ES-3B Signal. Lighting and Electrical Systems- Signal Heads and Mountings
- ☐ ES-3C Signal. Lighting and Electrical Systems- Signal Heads and Mountings
- ☐ ES-3D Signal. Lighting and Electrical Systems- Signal Heads and Mountings
- ☐ ES-3E Signal. Lighting and Electrical Systems- Signal Heads and Mountings
- ☐ ES-4A Signal. Lighting and Electrical Systems- Controller Cabinet Details
- ☐ ES-4B Signal. Lighting and Electrical Systems- Controller Cabinet Details
- ☐ ES-4C Signal. Lighting and Electrical Systems- Controller Cabinet Details
- ☐ ES-4D Irrigation Controller Enclosure Cabinet
- ☐ ES-5A Signal. Lighting and Electrical Systems- Detectors
- ☐ ES-5B Signal. Lighting and Electrical Systems- Detectors
- ☐ ES-5C Signal. Lighting and Electrical Systems- Detectors
- ☐ ES-5D Signal. Lighting and Electrical Systems- Detectors
- ☐ ES-5E Signal. Lighting and Electrical Systems- Detectors
- ☐ ES-5F Signal. Lighting and Electrical Systems- Pedestrian Barricades
- ☐ ES-6A Signal and Lighting Standards- Type 1 Standards and Equipment Numbering
- ☐ ES-6AA Signal Standards- Push Button Posts
- ☐ ES-6B Lighting Standards- Types 15, 21 and 22
- ☐ ES-6C Lighting Standards- 24.4 m to 48.8 m High Mast Light Pole. Foundation Details
- ☐ ES-6D Lighting Standards- Types 30 and 31
- ☐ ES-6DA Lighting Standards- Type 32
- ☐ ES-6E Lighting Standards- Types 30 and 31. Base Details
- ☐ ES-6F Lighting Standards- 10 Degree Type
- ☐ ES-6H Lighting Standards- 10 Degree Type. Details
- ☐ RSP ES-6J SIGNAL AND LIGHTING STANDARDS- CASE 1 ARM LOADING. WIND VELOCITY = 113 km/h. ARM LENGTHS 4.6 m TO 9.1 m
- ☐ ES-6K Signal and Lighting Standards- Case 2 Arm Loading. Wind Velocity = 113 km/h. Arm Lengths 6.1 m to 9.1 m
- ☐ ES-6L Signal and Lighting Standards- Case 3 Arm Loading. Wind Velocity = 113 km/h. Arm Lengths 4.6 m to 13.7 m
- ☐ ES-6M Signal and Lighting Standards- Case 4 Arm Loading. Wind Velocity = 113 km/h. Arm Lengths 7.6 m to 13.7 m
- ☐ ES-6MA Signal and Lighting Standards- Case 5 Arm Loading. Wind Velocity = 113 km/h. Arm Lengths 15.2 m to 16.8 m
- ☐ ES-6N Signal and Lighting Standards- Type 40-0-129
- ☐ ES-6O Signal and Lighting Standards- Case 1 Arm Loading. Wind Velocity = 129 km/h. Arm Lengths 7.6 m to 9.1 m
- ☐ ES-6P Signal and Lighting Standards- Case 2 Arm Loading. Wind Velocity = 129 km/h. Arm Lengths 6.1 m to 9.1 m
- ☐ ES-6Q Signal and Lighting Standards- Case 3 Arm Loading. Wind Velocity = 129 km/h. Arm Lengths 6.1 m to 13.7 m
- ☐ RSP ES-6R SIGNAL AND LIGHTING STANDARDS- CASE 4 ARM LOADING. WIND VELOCITY = 129 km/h. ARM LENGTHS 7.6 m TO 13.7 m
- ☐ ES-6RA Signal and Lighting Standards- Case 5 Arm Loading. Wind Velocity = 129 km/h. Arm Lengths 15.2 m to 16.8 m
- ☐ ES-6RB Signal and Lighting Standards- Case 5 Arm Loading. Wind Velocity = 129 km/h. Arm Lengths 18.2 m to 19.8 m
- ☐ ES-6S Signal and Lighting Standards- Details No. 1
- ☐ ES-6T Signal and Lighting Standards- Details No. 2
- ☐ ES-6TA Signal and Lighting Standards- Pole and Mast Arm Alternatives
- ☐ ES-6U Lighting Standards- Type 15 Slip Base Insert
- ☐ ES-6V Signal and Sign Standards- Type 33 Left Turn
- ☐ ES-7A Signal. Lighting and Electrical Systems- Electrical Details. Structure Installations
- ☐ ES-7B Signal. Lighting and Electrical Systems- Electrical Details. Structure Installations
- ☐ ES-7C Signal. Lighting and Electrical Systems- Electrical Details. Structure Installations
- ☐ ES-7D Signal. Lighting and Electrical Systems- Electrical Details. Structure Installations
- ☐ ES-7E Signal. Lighting and Electrical Systems- Electrical Details. Structure Installations
- ☐ ES-7F Signal. Lighting and Electrical Systems- Flush Soffit Luminaire Modification Details. Structure Installations
- ☐ ES-8 Signal. Lighting and Electrical Systems- Pull Box Details
- ☐ ES-9A Signal. Lighting and Electrical Systems- Cantilever Flashing Beacon. Types 9. 9A and 9B
- ☐ ES-9B Signal. Lighting and Electrical Systems- Cantilever Flashing Beacon. Types 9. 9A and 9B
- ☐ ES-10 Signal. Lighting and Electrical Systems- Isolux Diagrams
- ☐ ES-11 Signal. Lighting and Electrical Systems- Foundation Installations
- ☐ ES-12 Signal. Lighting and Electrical Systems- Pedestrian Undercrossing Fluorescent Lighting Fixture
- ☐ ES-13 Signal. Lighting and Electrical Systems- Splicing Details
- ☐ ES-14 Signal. Lighting and Electrical Systems- Wiring Details and Fuse Ratings
- ☐ ES-15 Signal. Lighting and Electrical Systems- Pedestrian Overcrossing Fluorescent Lighting Fixture
- ☐ ES-27A Signal. Lighting and Electrical Systems- Extinguishable Message Sign. 250 mm Letters
- ☐ ES-27B Signal. Lighting and Electrical Systems- Extinguishable Message Sign. 250 mm Letters
- ☐ ES-28 Signal. Lighting and Electrical Systems- Extinguishable Message Sign and Flashing Beacons

SIGN ILLUMINATION

- ☐ ES-29 Sign Illumination- Mercury Sign Illumination Equipment
- ☐ ES-30 Sign Illumination- 915 mm Fluorescent Sign Illumination Equipment
- ☐ ES-32A Sign Illumination- Sign Illumination Equipment
- ☐ ES-32B Sign Illumination- Sign Illumination Control
- ☐ ES-33 Sign Illumination- Internally Illuminated Street Name Sign

CLOSED CIRCUIT TELEVISION

- ☐ RSP ES-34A CLOSED CIRCUIT TELEVISION- POLE DETAILS
- ☐ ES-34B Closed Circuit Television- Pole Details- Overhead Sign Mounted

NEW STANDARD PLANS

- ☐ NSP D75A PIPE INLETS
- ☐ NSP D75B PIPE INLETS
- ☐ NSP D75C PIPE INLETS- LADDER. STEP AND TRASH RACK DETAILS

DATE PLOTTED = $DATE
TIME PLOTTED = $TIME

SHEET 2 OF 2

STANDARD PLANS LIST

(July,1997 Edition)

REVISED DECEMBER 4. 1997

WEB SITE ADDRESS: http://www.dot.ca.gov/hq/esc/projplan/pplntro.htm

The Standard Plan sheets applicable to this contract include, but are not limited to those indicated by a marked box.
The Revised Standard Plans (RSP) and New Standard Plans (NSP) which apply to this contract are included as individual sheets of the project plans.

USERNAME = $USER
DGN FILE = $REQUEST

CONTRACT NO.

DIST	COUNTY	ROUTE	KILOMETER POST TOTAL PROJECT	SHEET NO.	TOTAL SHEETS
X	LA		X.XX		

REGISTERED CIVIL ENGINEER

PLANS APPROVAL DATE

REGISTERED PROFESSIONAL ENGINEER No. Exp. CIVIL STATE OF CALIFORNIA

MONTGOMERY WATSON - CHAUDHARY
750 B Street Suite 1610
San Diego CA 92101-8131

The State of California or its officers or agents shall not be responsible for the accuracy or completeness of electronic copies of this plan sheet.

ALL DIMENSIONS ARE IN METERS UNLESS OTHERWISE SHOWN

Caltrans Metric

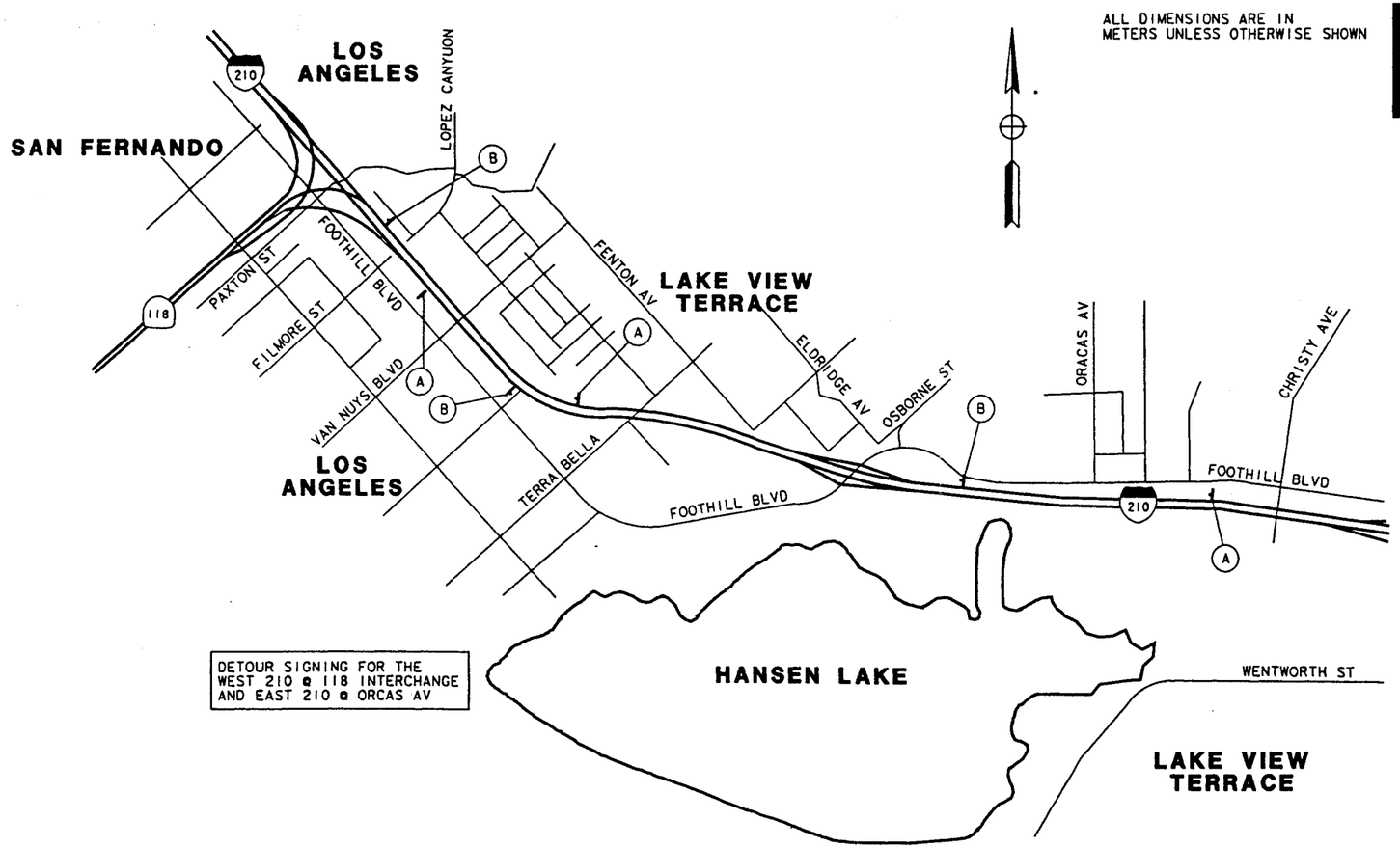

DETOUR SIGNING FOR THE WEST 210 @ 118 INTERCHANGE AND EAST 210 @ ORCAS AV

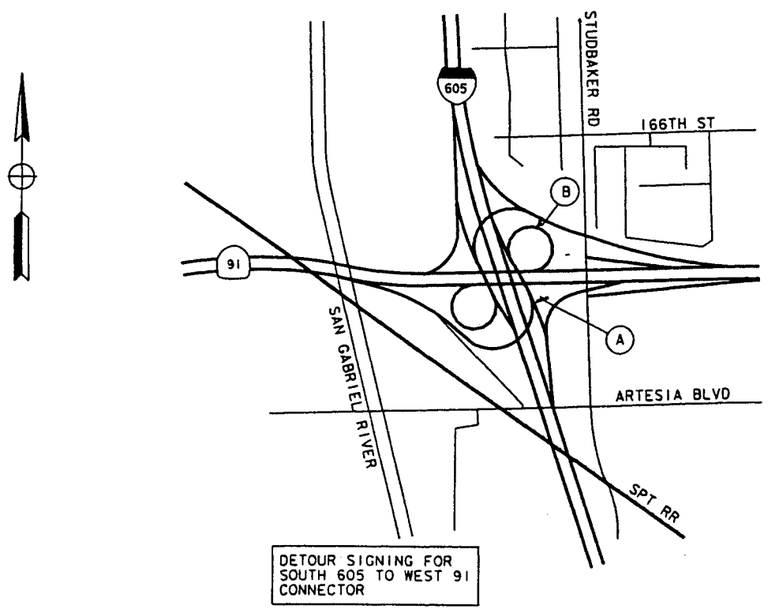

DETOUR SIGNING FOR SOUTH 605 TO WEST 91 CONNECTOR

CONSTRUCTION AREA SIGNS

Sign no.	Sign Code	Panel Size	Sign Message	No. of Post and Size	No. of signs
A	C24		SHOULDER WORK AHEAD	1-89MM X 140MM (S)	
B	C13	1200X450	END CONSTRUCTION	1-89MM X 89MM (S)	

(S) Denotes Stationary Mounted Sign

Exact sign location to be determined by the Engineer.

CONSTRUCTION AREA SIGNS

NO SCALE

CS-1

DATE	REVISED BY	DATE REVISED
3/10/98		3/10/98

CALCULATED/DESIGNED BY

CHECKED BY

DESIGN OVERSIGHT

STATE OF CALIFORNIA - DEPARTMENT OF TRANSPORTATION

Caltrans

@DATE@ @TIME@ @FILE@

FOR REDUCED PLANS ORIGINAL SCALE IN MILLIMETERS 0 20 40 60 80

USERNAME => $$$$$$USER$$$$$$
DGN FILE => $$$$$$$$$$DGNSPEC$$$$$$$$$$

CU 00000

EA 910202

DIST	COUNTY	ROUTE	KILOMETER POST TOTAL PROJECT	SHEET NO.	TOTAL SHEETS
X	LA	210	X.XX		

REGISTERED CIVIL ENGINEER

PLANS APPROVAL DATE

REGISTERED PROFESSIONAL ENGINEER — No. Exp. — CIVIL — STATE OF CALIFORNIA

MONTGOMERY WATSON - CHAUDHARY
750 B Street Suite 1610
San Diego CA 92101-8131

The State of California or its officers or agents shall not be responsible for the accuracy or completeness of electronic copies of this plan sheet.

ALL DIMENSIONS ARE IN METERS UNLESS OTHERWISE SHOWN

Caltrans Metric

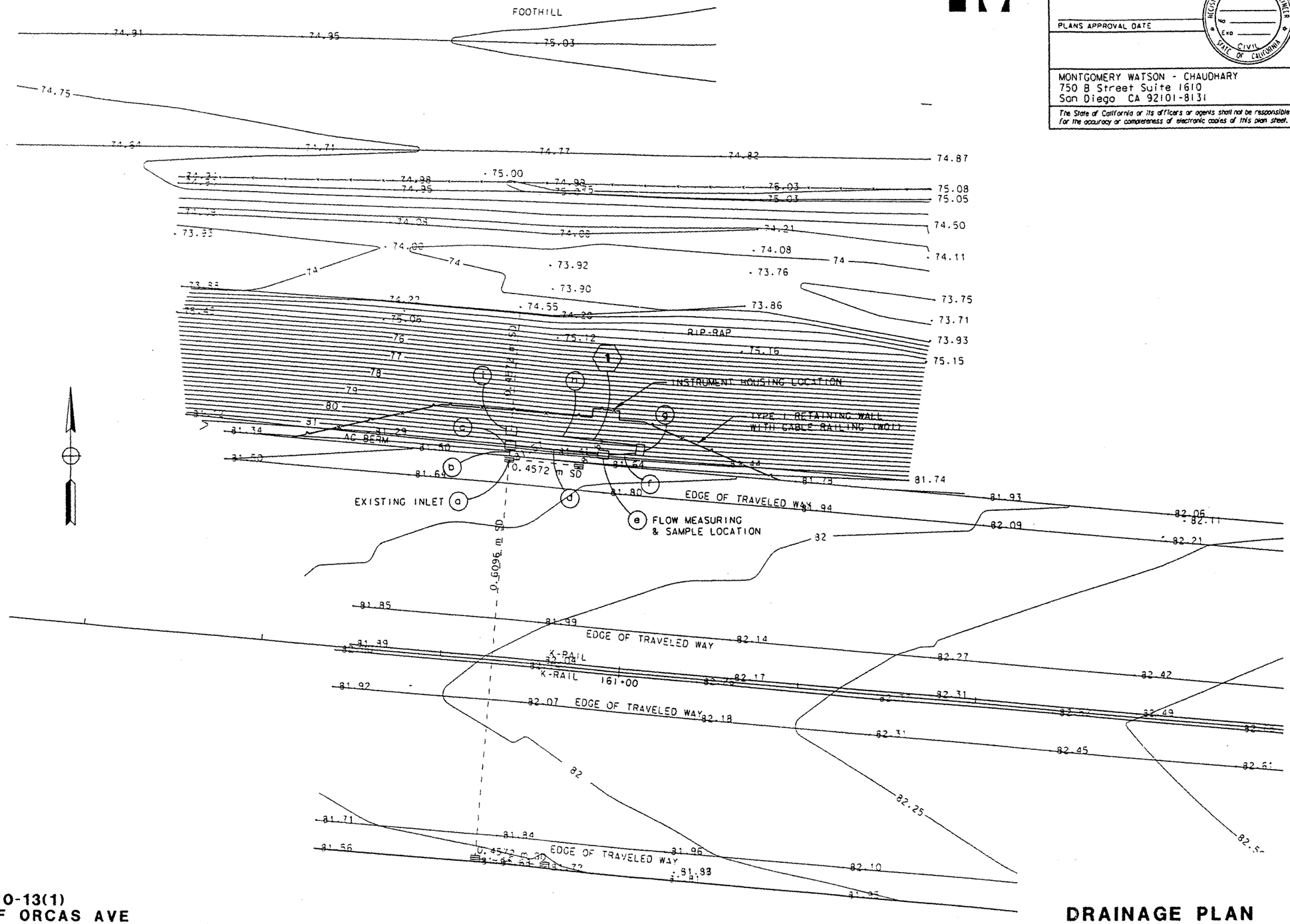

210-13(1)
WEST OF ORCAS AVE
CONTROL LOCATION

This plan concerns for drainage only.

DRAINAGE PLAN

SCALE 1:200

D-1

DESIGN OVERSIGHT

STATE OF CALIFORNIA - DEPARTMENT OF TRANSPORTATION

Caltrans

DATE REVISED	REVISED BY	DATE	CALCULATED/DESIGNED BY	CHECKED BY
		3/10/98		

$DATES $TIMES $FILES

FOR REDUCED PLANS ORIGINAL SCALE IN MILLIMETERS 0 20 40 60 80

USERNAME => $$$$$$USER$$$$$$
DGN FILE => $$$$$$$$$$DGNSPEC$$$$$$$$$$

CU 00000 EA 910202

DIST	COUNTY	ROUTE	KILOMETER POST TOTAL PROJECT	SHEET NO.	TOTAL SHEETS
X	LA	210	X.XX		

REGISTERED CIVIL ENGINEER

PLANS APPROVAL DATE

REGISTERED PROFESSIONAL ENGINEER — NO. EXP. — CIVIL — STATE OF CALIFORNIA

MONTGOMERY WATSON - CHAUDHARY
750 B Street Suite 1610
San Diego CA 92101-8131

The State of California or its officers or agents shall not be responsible for the accuracy or completeness of electronic copies of this plan sheet.

ALL DIMENSIONS ARE IN METERS UNLESS OTHERWISE SHOWN

Caltrans Metric

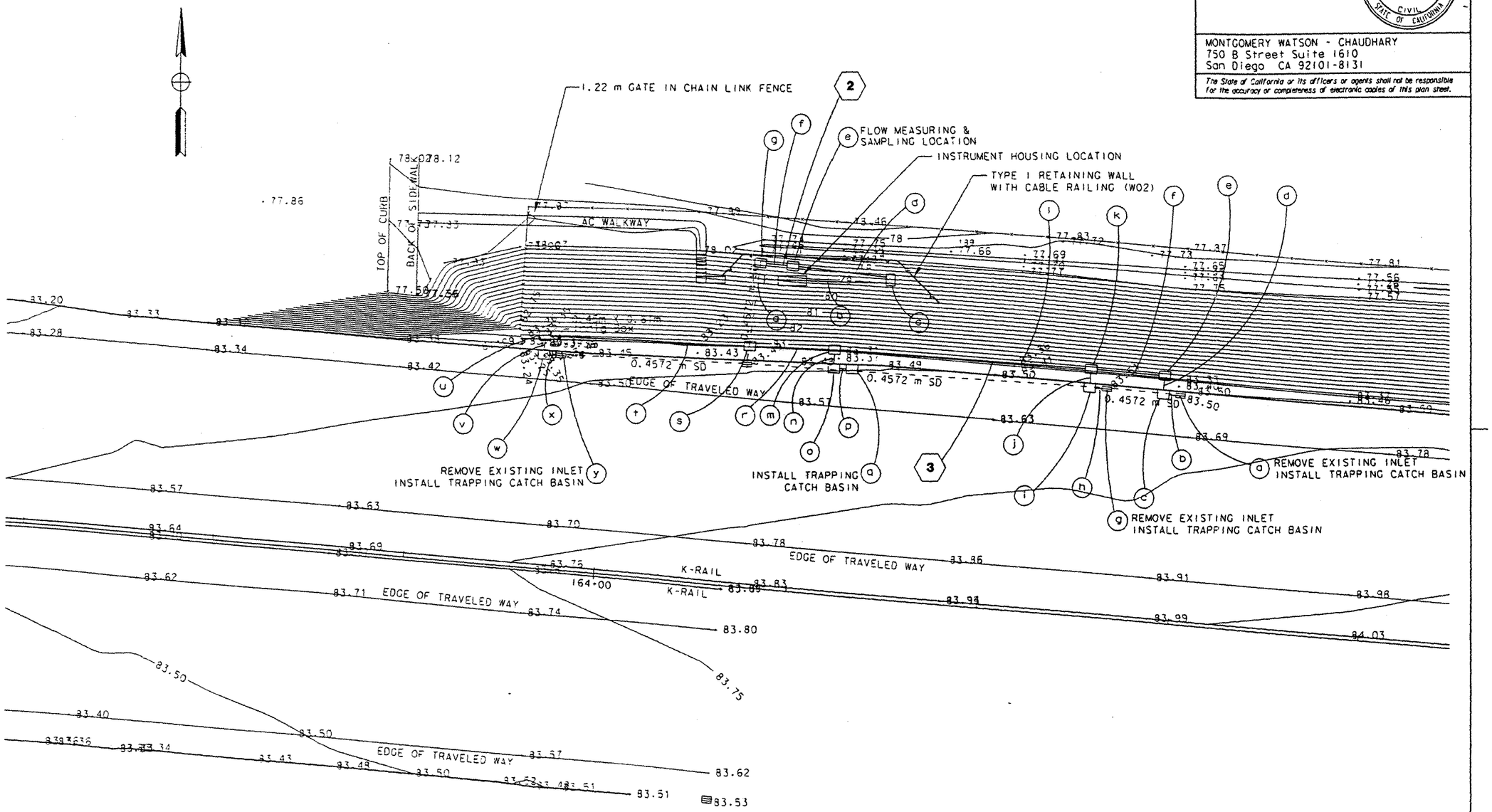

210-13(2)
EAST OF ORCAS AVE
RETROFIT LOCATION

This plan accurate for drainage only.

DRAINAGE PLAN

SCALE 1:200

D-2

FOR REDUCED PLANS ORIGINAL SCALE IN MILLIMETERS 0 20 40 60 80

USERNAME => $$$$$$USER$$$$$$
DGN FILE => $$$$$$$$$$$DGNSPEC$$$$$$$$$$$

CU 00000

EA 910202

DESIGN OVERSIGHT

STATE OF CALIFORNIA - DEPARTMENT OF TRANSPORTATION

Caltrans

	DATE	REVISED BY
	3/10/98	

	DATE	REVISED
	3/10/98	

CALCULATED/DESIGNED BY

CHECKED BY

$DATES $TIMES $FILES

DIST	COUNTY	ROUTE	KILOMETER POST TOTAL PROJECT	SHEET NO.	TOTAL SHEETS
X	LA	210	X.XX		

REGISTERED CIVIL ENGINEER

PLANS APPROVAL DATE

REGISTERED PROFESSIONAL ENGINEER — No. Exp. — CIVIL — STATE OF CALIFORNIA

MONTGOMERY WATSON - CHAUDHARY
750 B Street Suite 1610
San Diego CA 92101-8131

The State of California or its officers or agents shall not be responsible for the accuracy or completeness of electronic copies of this plan sheet.

Caltrans Metric

ALL DIMENSIONS ARE IN METERS UNLESS OTHERWISE SHOWN

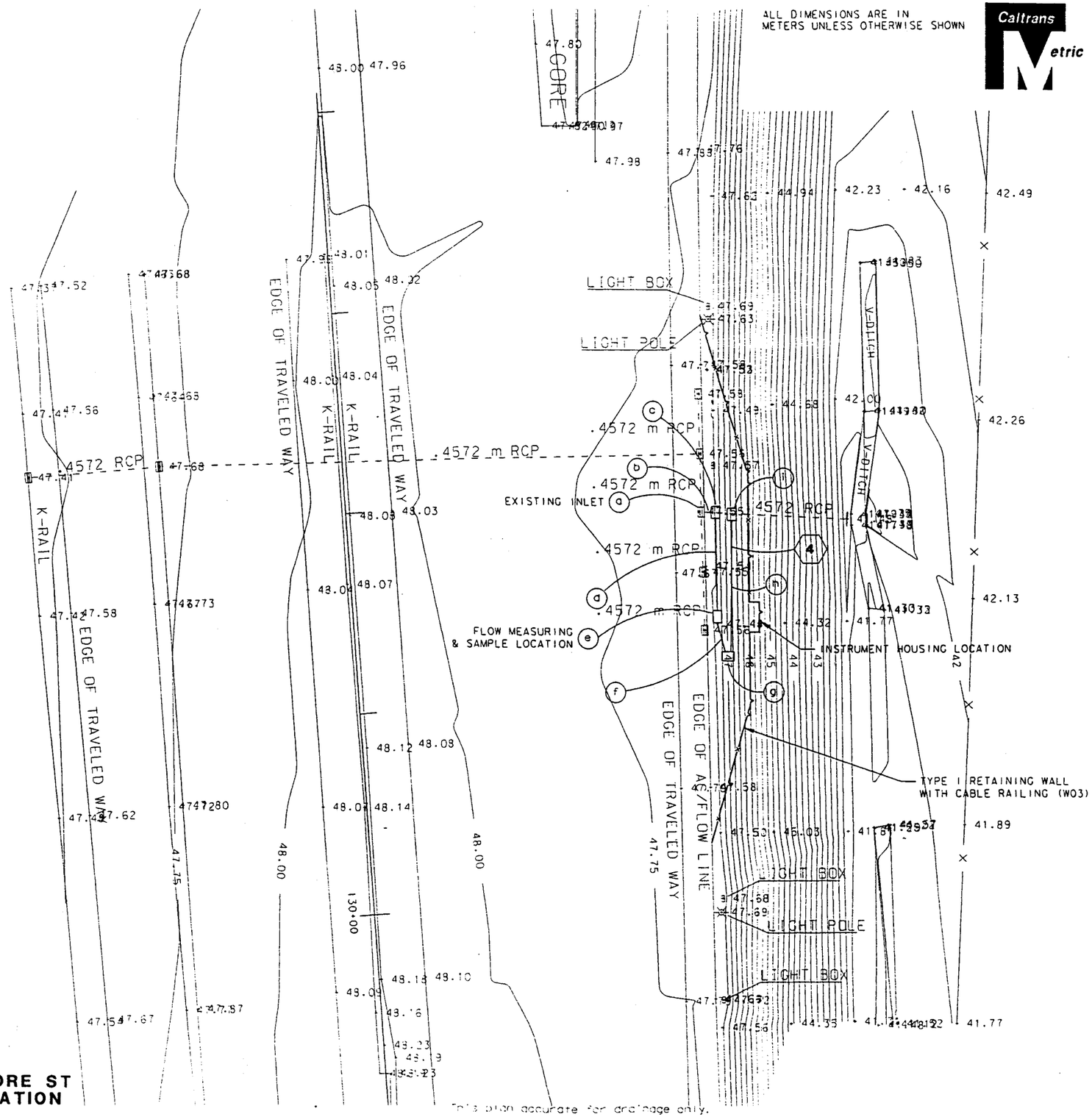

This plan accurate for drainage only.

210-5(3)
EAST OF FILMORE ST
CONTROL LOCATION

DRAINAGE PLAN

SCALE 1:200

D-3

REVISED BY	DATE REVISED

CALCULATED/DESIGNED BY	DATE 3/10/98
CHECKED BY	3/10/98

DESIGN OVERSIGHT

STATE OF CALIFORNIA - DEPARTMENT OF TRANSPORTATION

Caltrans

$DATES $TIMES $FILES

FOR REDUCED PLANS ORIGINAL SCALE IN MILLIMETERS 0 20 40 60 80

USERNAME => $$$$$$USER$$$$$$
DGN FILE => $$$$$$$$$$DGNSPEC$$$$$$$$$$

CU 00000 | EA 910202

04cb9733

DIST	COUNTY	ROUTE	KILOMETER POST TOTAL PROJECT	SHEET NO.	TOTAL SHEETS
X	LA	210	X.XX		

REGISTERED CIVIL ENGINEER

PLANS APPROVAL DATE

REGISTERED PROFESSIONAL ENGINEER — No. — Exp. — CIVIL — STATE OF CALIFORNIA

MONTGOMERY WATSON - CHAUDHARY
750 B Street Suite 1610
San Diego CA 92101-8131

The State of California or its officers or agents shall not be responsible for the accuracy or completeness of electronic copies of this plan sheet.

Caltrans Metric

ALL DIMENSIONS ARE IN METERS UNLESS OTHERWISE SHOWN

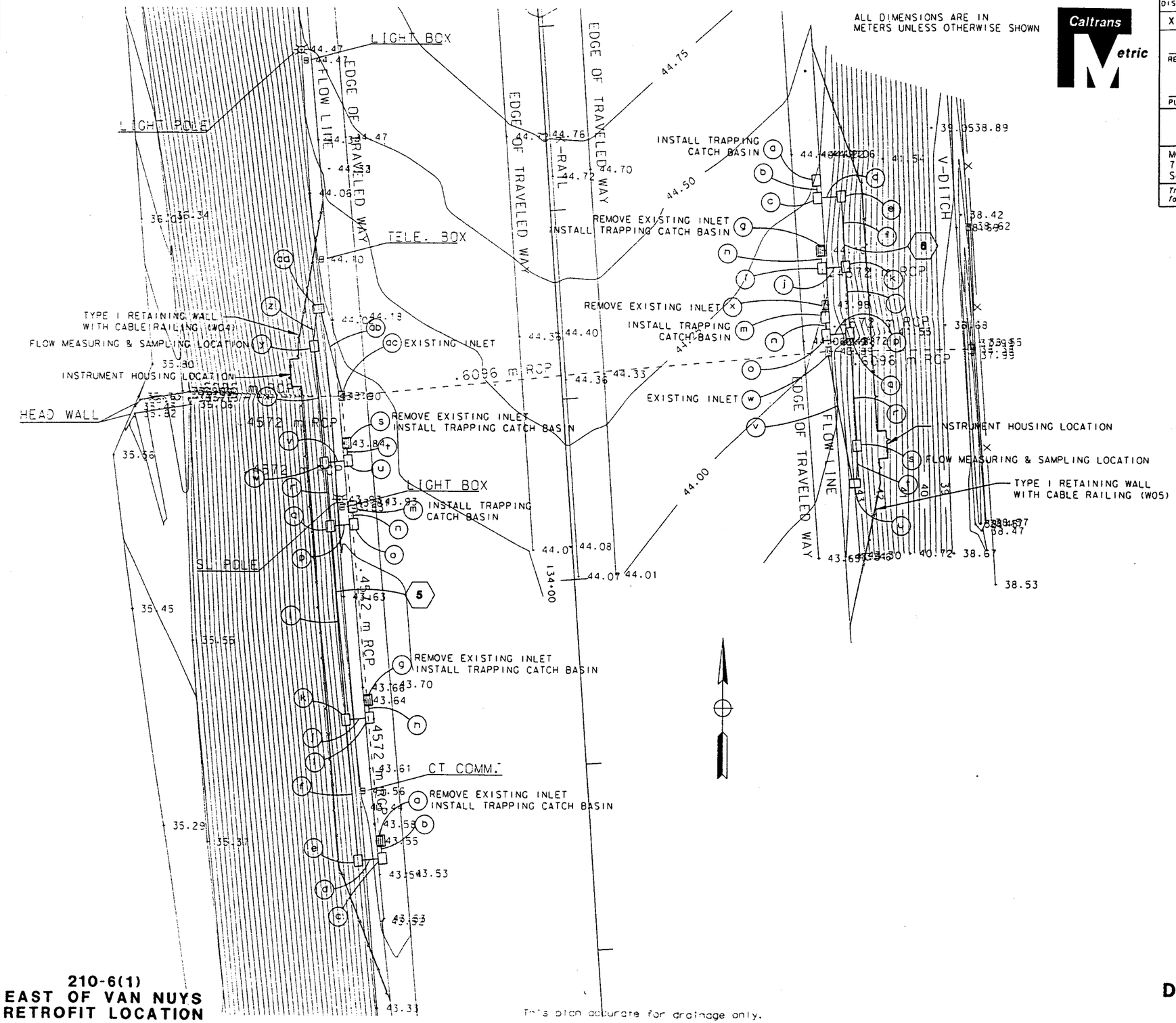

210-6(1)
EAST OF VAN NUYS
RETROFIT LOCATION

This plan accurate for drainage only.

DRAINAGE PLAN

SCALE 1:200

D-4

DESIGN OVERSIGHT

STATE OF CALIFORNIA - DEPARTMENT OF TRANSPORTATION

Caltrans

CALCULATED/ DESIGNED BY	DATE 3/10/98	REVISED BY
CHECKED BY	3/10/98	DATE REVISED

$DATES $TIMES $FILES

FOR REDUCED PLANS ORIGINAL SCALE IN MILLIMETERS 0 20 40 60 80

USERNAME => $$$$$$$USER$$$$$$
DGN FILE => $$$$$$$$$$DGNSPEC$$$$$$$$$$

CU 00000 EA 910202

ALL DIMENSIONS ARE IN METERS UNLESS OTHERWISE SHOWN

Caltrans Metric

DIST	COUNTY	ROUTE	KILOMETER POST TOTAL PROJECT	SHEET NO.	TOTAL SHEETS
X	LA		X.XX		

REGISTERED CIVIL ENGINEER

PLANS APPROVAL DATE

REGISTERED PROFESSIONAL ENGINEER No. Exp. CIVIL STATE OF CALIFORNIA

MONTGOMERY WATSON - CHAUDHARY
750 B Street Suite 1610
San Diego CA 92101-8131

The State of California or its officers or agents shall not be responsible for the accuracy or completeness of electronic copies of this plan sheet.

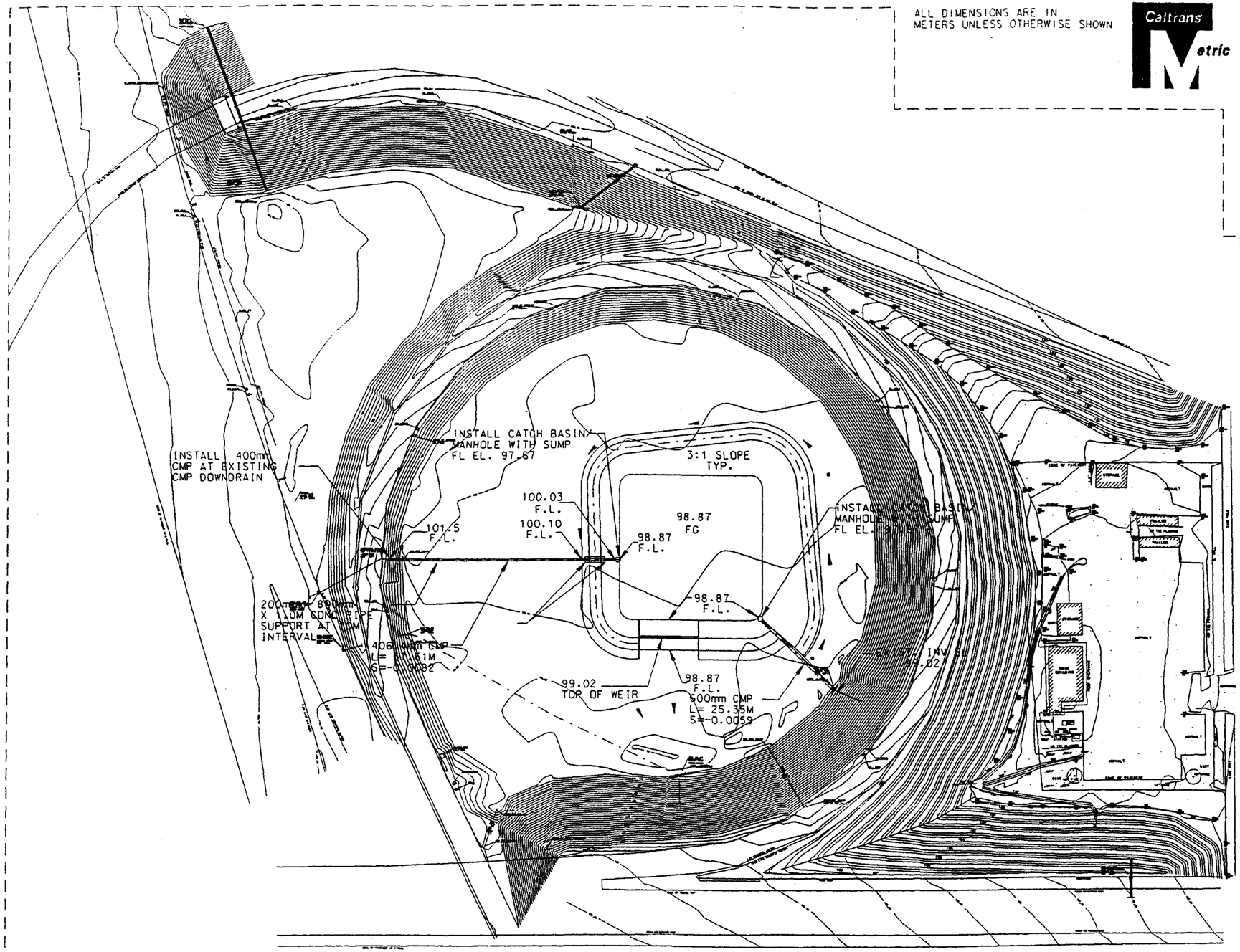

(N) 605/(W) 91 IFILTRATION BASIN

This plan accurate for drainage only.

DRAINAGE PLAN

SCALE 1:500

D-5

DESIGN OVERSIGHT

STATE OF CALIFORNIA - DEPARTMENT OF TRANSPORTATION

Caltrans

CALCULATED/ DESIGNED BY	DATE 3/10/98	REVISED BY
CHECKED BY	3/10/98	DATE REVISED

$DATE$ $TIME$ $FILE$

FOR REDUCED PLANS 0 20 40 60 80

USERNAME => $$$$$$USER$$$$$$

Project No. 2
District 7

INDEX OF SHEETS

DIST	COUNTY	ROUTE	KILOMETER POST TOTAL PROJECT	SHEET No	TOTAL SHEETS
7	LA	5,605	Var	1	??

STATE OF CALIFORNIA

DEPARTMENT OF TRANSPORTATION

PROJECT PLANS FOR CONSTRUCTION ADJACENT TO

STATE HIGHWAY

IN LOS ANGELES COUNTY

IN SANTE FE SPRINGS AND LONG BEACH

AT ROUTE 5/605 SEPARATION

AND AT ROUTE 605/91 SEPARATION

To be supplemented by Standard Plans dated July, 1997

The State of California or its officers or agents shall not be responsible for the accuracy or completeness of electronic copies of this plan sheet.

Caltrans Metric

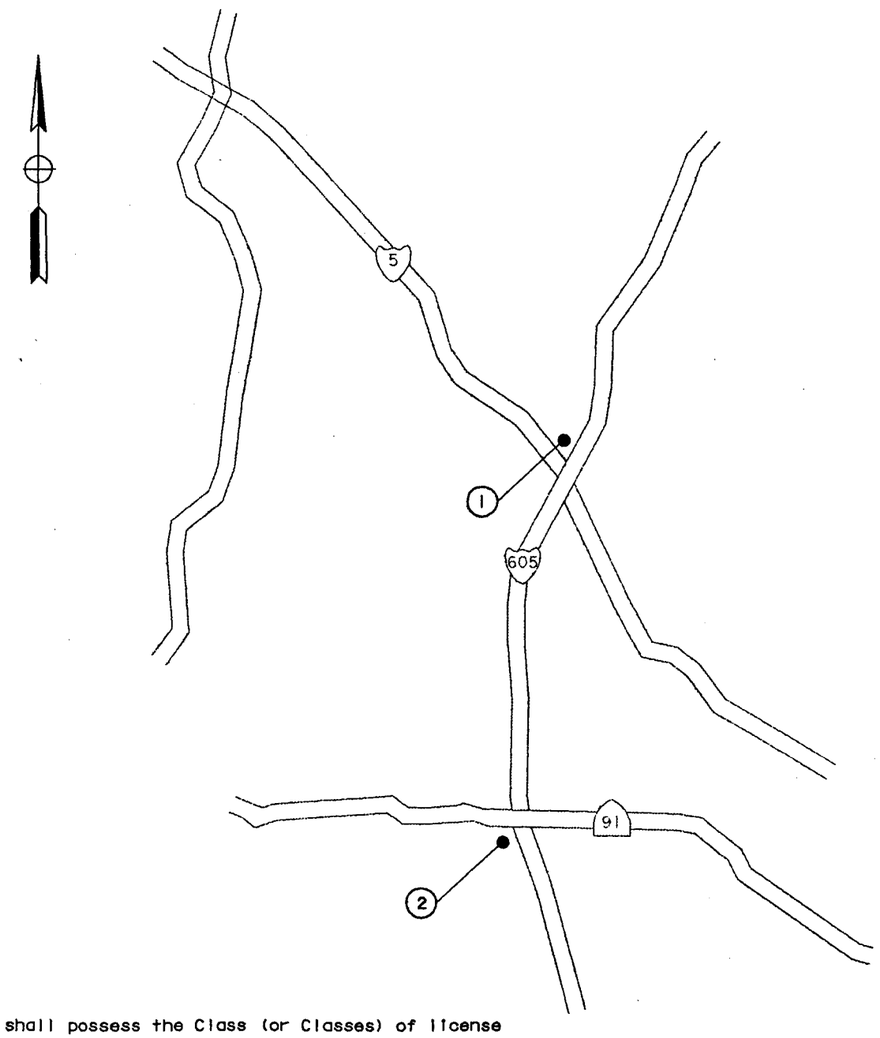

LOCATION OF CONSTRUCTION

LOC	CO	ROUTE	KP	PM	DESCRIPTION
1	LA	5	644.4	402.0	15/1605 Jct between SB 1-5 and SB 1-605 connector
2	LA	605	1587.0	44.1	1605/SR91 Jct between SB 1605 and EB SR91 connector

Project Engineer Date
Registered Civil Engineer

REGISTERED PROFESSIONAL ENGINEER No. Exp. CIVIL STATE OF CALIFORNIA

Plans Approval Date

The Contractor shall possess the Class (or Classes) of license as specified in the ''Notice to Contractors''.

Contract No.

FORM DC-OE-93-PF (REV. 3/88)

FOR REDUCED PLANS ORIGINAL SCALE IS IN MILLIMETERS 0 20 40 60 80

USERNAME => $USER

CU 00000

EA 000000

LAST REVISION DATE PLOTTED => $DATE

$DATE$ PROJECT ENGINEER DATE $FILE$ PROJECT MANAGER DATE

DIST.	COUNTY	ROUTE	KILOMETER POST TOTAL PROJECT	SHEET NO.	TOTAL SHEETS

The State of California or its officers or agents shall not be responsible for the accuracy or completeness of electronic copies of this plan sheet.

Caltrans Metric

To accompany plans dated _____

GENERAL ROAD WORK

MISCELLANEOUS

- ☒ A10A Abbreviations
- ☒ A10B Symbols
- ☐ A20A Pavement Markers and Traffic Lines, Typical Details
- ☐ A20B Pavement Markers and Traffic Lines, Typical Details
- ☐ A20C Pavement Markers and Traffic Lines, Typical Details
- ☐ A20D Pavement Markers and Traffic Lines, Typical Details
- ☐ A24A Pavement Markings- Arrows
- ☐ A24B Pavement Markings- Arrows
- ☐ A24C Pavement Markings- Symbols and Numerals
- ☐ A24D Pavement Markings- Words
- ☐ A24E Pavement Markings- Words and Crosswalks
- ☐ A35A Portland Cement Concrete Paving Details
- ☐ A40 Rumble Strip Details
- ☐ A62A Excavation and Backfill- Miscellaneous Details
- ☐ A62B Limits of Payment for Excavation and Backfill Bridge- Surcharge and Wall
- ☐ A62C Limits of Payment for Excavation and Backfill- Bridge
- ☐ A62D Excavation and Backfill- Concrete Pipe Culverts
- ☐ A62E Excavation and Backfill- Cast-in-Place Reinforced Concrete Box and Arch Culverts
- ☐ A62F Excavation and Backfill- Metal and Plastic Culverts
- ☐ A73A Object Markers
- ☐ A73B Markers
- ☒ A73C Delineators, Channelizers and Barricades
- ☐ A74 Survey Monuments
- ☐ A75A Concrete Barrier Type 50
- ☐ A75B Concrete Barrier Type 50F
- ☐ A75D Concrete Headlight Glare Screen
- ☐ A77A Metal Beam Guard Railing
- ☐ A77B Metal Beam Guard Railing- Standard Hardware
- ☐ A77C Metal Beam Guard Railing- Posts and Blocks
- ☐ A77D Guard Rail Flares
- ☐ A77E Guard Rail Flares
- ☐ A77F Metal Beam Guard Railing- Miscellaneous Details
- ☐ A77G Guard Rail End Anchors (Breakaway)
- ☐ A77H Guard Rail End Anchors (Breakaway Hardware)
- ☐ A77I Barrier and Guard Rail End Anchors
- ☐ A77J Guard Rail Connections to Bridge Rails, Retaining Walls and Abutments
- ☐ A77K Guard Rail Connections to Bridge Sidewalks and Curbs
- ☐ A78A Thrie Beam Barrier
- ☐ A78B Thrie Beam Barrier- Standard Hardware and Miscellaneous Details
- ☐ A78C Thrie Beam Barrier- End Anchors
- ☐ A78D Thrie Beam Barrier Connection to Concrete Barrier Type 50
- ☐ A78E Thrie Beam Barrier Connections to Bridge Rails
- ☐ A78F Thrie Beam Barrier Connections to Bridge Curbs, Retaining Walls and Abutments
- ☐ A80 Thrie Beam Barrier Emergency Passageway
- ☐ A81 Crash Cushion, Sand Filled
- ☐ A83 Portable Scale Pad and Approach Slab Details
- ☒ A85 Chain Link Fence
- ☐ A86 Barbed Wire and Wire Mesh Fences
- ☐ A87 Curbs, Dikes and Driveways

CRIB WALLS

- ☐ C7A Reinforced Concrete Crib Wall- Battered Wall- Types A, B and C
- ☐ C7B Reinforced Concrete Crib Wall- Battered Wall- Types D, E and F
- ☐ C7C Reinforced Concrete Crib Wall- Vertical Wall- Types A, B and C
- ☐ C7D Reinforced Concrete Crib Wall- Vertical Wall- Types D, E and F
- ☐ C7E Reinforced Concrete Crib Wall- Types A, B, C, D, E and F-Header and Stretcher Details
- ☐ C7F Design Data for Reinforced Concrete Crib Wall Foundation Pressure-Battered Wall
- ☐ C7G Reinforced Concrete Crib Wall Foundation Pressure-Vertical Wall
- ☐ C8A Steel Crib Wall- Construction Details
- ☐ C8B Steel Crib Wall- Design Data
- ☐ C8C Steel Crib Wall- Design Data
- ☐ C9A Timber Crib Wall- Types A, B, C and D
- ☐ C9B Timber Crib Wall- Types A, B, C and D-Design Data

DRAINAGE

- ☐ D72 Drainage Inlets
- ☐ D73 Drainage Inlets
- ☐ D74A Drainage Inlets
- ☐ D74B Drainage Inlets
- ☐ D74C Drainage Inlets Details
- ☐ D75 Pipe Inlet
- ☐ D77A Grate Details
- ☐ D77B Bicycle Proof Grate Details
- ☐ D77C Alternative Hinged Cover for Type OL and OS Inlets and Trash Rack for Type OCP Inlet
- ☐ D78 Gutter Depressions
- ☐ D79 Precast Reinforced Concrete Pipe- Direct Design Method
- ☐ D80 Cast-in-Place Reinforced Concrete Single Box Culvert
- ☐ D81 Cast-in-Place Reinforced Concrete Double Box Culvert
- ☐ D82 Cast-in-Place Reinforced Concrete Box Culvert Miscellaneous Details
- ☐ D84 Box Culvert Wingwalls- Types A, B and C
- ☐ D85 Box Culvert Wingwalls- Types D and E
- ☐ D86A Box Culvert Warped Wingwalls
- ☐ D86B Pipe Culvert Headwalls, Endwalls and Warped Wingwalls
- ☐ D86C Arch Culvert Headwalls, Endwalls and Warped Wingwalls
- ☐ D87A Overside Drains
- ☐ D87B Overside Drains
- ☐ D87C Underdrains
- ☐ D88 Construction Loads on Culverts
- ☐ D88A Strut Details for Structural Steel Plate Pipes, Arches, and Vehicular Undercrossings
- ☐ D89 Pipe Headwalls
- ☐ D90 Pipe Culvert Headwalls, Endwalls and Wingwalls- Types A, B and C
- ☐ D93A Pipe Riser Connections
- ☐ D93B Drainage Inlet Riser Connections
- ☐ D93C Pipe Riser with Debris Rack Cage
- ☐ D94A Metal and Plastic Flared End Sections
- ☐ D94B Concrete Flared End Sections
- ☐ D95 Concrete Arch Culverts
- ☒ D97A Corrugated Metal Pipe Coupling Details No. 1- Annular Coupling Band Bar and Strap and Angle Connectors
- ☐ D97B Corrugated Metal Pipe Coupling Details No. 2- Hat Band Coupler and Flange Details
- ☒ D97C Corrugated Metal Pipe Coupling Details No. 3- Helical and Universal Couplers
- ☒ D97D Corrugated Metal Pipe Coupling Details No. 4- Hugger Coupling Bands
- ☒ D97E Corrugated Metal Pipe Coupling Details No. 5- Standard Joint
- ☒ D97F Corrugated Metal Pipe Coupling Details No. 6- Positive Joint
- ☒ D97G Corrugated Metal Pipe Coupling Details No. 7- Positive Joints and Downdrains
- ☐ D97H Reinforced Concrete Pipe or Non-Reinforced Concrete Pipe Standard and Positive Joints
- ☐ D98A Slotted Corrugated Steel Pipe Drain Details
- ☐ D98B Slotted Corrugated Steel Pipe Drain Details
- ☐ D99A Structural Section Drainage System Details
- ☐ D99B Edge Drain Outlet and Vent Details
- ☐ D99C Edge Drain Cleanout and Vent Details
- ☐ D99D Cross Drain Interceptor Details

HIGHWAY PLANTING

- ☐ H1 Planting and Irrigation- Abbreviations
- ☐ H2 Planting and Irrigation- Symbols
- ☐ H3 Planting and Irrigation- Details
- ☐ H4 Planting and Irrigation- Details
- ☐ H5 Planting and Irrigation- Details
- ☐ H6 Planting and Irrigation- Details
- ☐ H7 Planting and Irrigation- Details
- ☐ H8 Planting and Irrigation- Details

TEMPORARY FACILITIES

- ☒ T1 Temporary Crash Cushion, Sand Filled
- ☒ T2 Temporary Crash Cushion, Sand Filled
- ☒ T3 Temporary Railing (Type K)
- ☐ T4 Temporary Traffic Screen
- ☐ T7 Construction Project Funding Identification Signs
- ☐ T10 Traffic Control System for Lane Closure on Freeways and Expressways
- ☐ T10A Traffic Control System for Lane and Complete Closures on Freeways and Expressways
- ☐ T11 Traffic Control System for Lane Closure on Multilane Conventional Highways
- ☐ T12 Traffic Control System for Lane Closure on Multilane Conventional Highways
- ☐ T13 Traffic Control System for Lane Closure on Two Lane Conventional Highways
- ☐ T14 Traffic Control System for Ramp Closures
- ☐ T15 Traffic Control System for Moving Lane Closure on Multilane Highways
- ☐ T16 Traffic Control System for Moving Lane Closure on Multilane Highways
- ☐ T17 Traffic Control System for Moving Lane Closure on Two Lane Highways

BRIDGE

- ☐ B0-1 Bridge Details
- ☐ B0-3 Bridge Details
- ☐ B0-5 Bridge Details
- ☐ B0-13 Bridge Details
- ☐ B2-3 400 mm Cast-in-Drilled-Hole Concrete Pile
- ☐ B2-5 Pile Details- Class 400 and Class 625
- ☐ B2-6 Pile Details- Class 400C and Class 625C
- ☐ B2-8 Pile Details- Class 900 and Class 900C
- ☐ B2-9 Load Test Pile Details (1)
- ☐ B2-10 Load Test Pile Details (2)
- ☐ B2-11 Load Test Pile Details (3)
- ☐ B3-1 Retaining Wall Type 1- H=1200 Through 9100 mm
- ☐ B3-2 Retaining Wall Type 1- H=9700 Through 10 900 mm
- ☐ B3-3 Retaining Wall- Type 1A
- ☐ B3-4 Retaining Wall- Type 2
- ☐ B3-5 Counterfort Retaining Wall- Type 3
- ☐ B3-6 Counterfort Retaining Wall- Type 4
- ☐ B3-7 Retaining Wall- Type 5
- ☐ B3-8 Retaining Wall Details No. 1
- ☐ B3-9 Retaining Wall Details No. 2
- ☐ B3-11 Retaining Wall Type 6- 1829 mm Maximum
- ☐ B6-1 T-Beam Details
- ☐ B6-10 Utility Openings, T-Beam
- ☐ B6-21 Joint Seals (Maximum Movement Rating = 50 mm)
- ☐ B7-1 Box Girder Details
- ☐ B7-5 Deck Drains
- ☐ B7-6 Deck Drains- Type D-1 and D-2
- ☐ B7-10 Utility Opening- Box Girder
- ☐ B7-11 Utility Details
- ☐ B8-5 Cast-in-Place Prestressed Girder Details
- ☐ B11-7 Chain Link Railing
- ☐ B11-47 Cable Railing
- ☐ B11-51 Tubular Hand Railing
- ☐ B11-52 Chain Link Railing Type 7
- ☐ B11-53 Concrete Barrier Type 25
- ☐ B11-54 Concrete Barrier Type 26
- ☐ B13-1 Slope Protection Detail No. 1
- ☐ B13-2 Slope Protection Detail No. 2
- ☐ B14-1 Structural Steel Plate Vehicular Undercrossing
- ☐ B14-3 Communication and Sprinkler Control Conduit (Conduit less than 103 mm Diameter)
- ☐ B14-4 Water Supply Line (Bridge) (Pipe less than NPS 4)
- ☐ B14-5 Water Supply Line (Details) (Pipe less than NPS 4)

SHEET 1 OF 2

STANDARD PLANS LIST

(July, 1995 Edition)

July 3, 1995

The Standard Plan sheets applicable to this contract include, but are not limited to those indicated by a marked box.

USERNAME => $$$$$$USER$$$$$$

CONTRACT NO.

$DATE$ $TIME$ $FILE$

ROADSIDE SIGNS

- ☐ RS1 Roadside Signs, Typical Installation Details No. 1
- ☒ RS2 Roadside Signs, Wood Post, Typical Installation Details No. 2
- ☒ RS3 Roadside Signs, Laminated Wood Box Post, Typical Installation Details No. 3
- ☐ RS4 Roadside Signs, Typical Installation Details No. 4

OVERHEAD SIGNS

OVERHEAD SIGNS-TRUSS

- ☐ S1 Overhead Signs- Truss, Instructions and Examples
- ☐ S2 Overhead Signs- Truss, Single Post Type, Post Types II thru VII
- ☐ S3 Overhead Signs- Truss, Two Post Type, Post Types I-S thru VII-S
- ☐ S4 Overhead Signs- Truss, Single Post Type, Structural Frame Members
- ☐ S5 Overhead Signs- Truss, Two Post Type, Structural Frame Members
- ☐ S6 Overhead Signs- Truss, Structural Frame Details
- ☐ S7 Overhead Signs- Truss, Frame Juncture Details
- ☐ S8A Overhead Signs- Steel Frame Removable Sign Panel Frames
- ☐ S8B Overhead Signs- Removable Sign Panel Frames, Overhead Formed Panel Mounting Details
- ☐ S8C Overhead Signs- Truss, Sign Panel Mounting Details, Laminated Panel- Type A
- ☐ S8D Overhead Signs- Truss, Removable Sign Panel Frames 2.794 m and 3.048 m Sign Panels
- ☐ S9 Overhead Signs- Walkway Details No. 1
- ☐ S10 Overhead Signs- Walkway Details No. 2
- ☐ S11 Overhead Signs- Walkway Safety Railing Details
- ☐ S13 Overhead Signs- Truss Pile Foundation

OVERHEAD SIGNS-LIGHTWEIGHT

- ☐ S14A Overhead Signs- Lightweight Balanced-Single Steel Post Connection and Mounting Details
- ☐ S14B Overhead Signs- Lightweight Balanced-Single Steel Post Details
- ☐ S15 Overhead Signs- Lightweight, Type A, Connection Details
- ☐ S16 Overhead Signs- Lightweight, Type B, Connection Details
- ☐ S17 Overhead Signs- Lightweight, Type C, Connection Details
- ☐ S18A Overhead Signs- Lightweight, Sign Panel Mounting Details, Laminated Panel- Type A
- ☐ S18B Overhead Signs- Lightweight, Light Fixture Mounting Details
- ☐ S20A Overhead Signs- Lightweight Post Details
- ☐ S20B Overhead Signs- Lightweight Foundation

OVERHEAD SIGNS-BOX BEAM CLOSED TRUSS ALTERNATIVE

- ☐ S39 Overhead Signs- Box Beam, Closed Truss Foundation
- ☐ S40A Overhead Signs- Box Beam, Closed Truss, Two Post Type Frame Members
- ☐ S40B Overhead Signs- Box Beam, Closed Truss, Single and Two Post Type General Frame Details
- ☐ S40C Overhead Signs- Box Beam, Closed Truss, Ribbed Sheet Metal Details
- ☐ S40D Overhead Signs- Box Beam, Closed Truss, Two Post Type Frame Details
- ☐ S40E Overhead Signs- Box Beam, Closed Truss, Two Post Type Frame Juncture Details
- ☐ S40F Overhead Signs- Box Beam, Closed Truss, Two Post Type Post Details
- ☐ S40G Overhead Signs- Box Beam, Closed Truss, Single Post Type Frame Members
- ☐ S40H Overhead Signs- Box Beam, Closed Truss, Single Post Cantilever Frame Details
- ☐ S40I Overhead Signs- Box Beam, Closed Truss, Single Post Cantilever Frame Juncture Details
- ☐ S40J Overhead Signs- Box Beam, Closed Truss, Single Post Cantilever Post Details
- ☐ S40K Overhead Signs- Box Beam, Closed Truss, Single Post Butterfly Frame Details
- ☐ S40L Overhead Signs- Box Beam, Closed Truss, Single Post Butterfly Frame Juncture Details
- ☐ S40M Overhead Signs- Box Beam, Closed Truss, Single Post Butterfly Post Details

OVERHEAD SIGNS-TUBULAR

- ☐ S40N Overhead Signs- Tubular, Instructions and Examples
- ☐ S40P Overhead Signs- Tubular, Single Post Type Layout and Pipe Selection
- ☐ S40Q Overhead Signs- Tubular, Two Post Type Layout and Pipe Selection
- ☐ S40R Overhead Signs- Tubular, Structural Frame Details No. 1
- ☐ S40S Overhead Signs- Tubular, Structural Frame Details No. 2
- ☐ S40T Overhead Signs- Tubular Foundation Details

SIGNALS, LIGHTING AND ELECTRICAL SYSTEMS

- ☐ ES-1A Signal, Lighting and Electrical Systems- Symbols and Abbreviations
- ☐ ES-1B Signal, Lighting and Electrical Systems- Symbols and Abbreviations
- ☐ ES-2A Signal, Lighting and Electrical Systems- Service Equipment
- ☐ ES-2B Signal, Lighting and Electrical Systems- Service Equipment
- ☐ ES-2C Signal, Lighting and Electrical Systems- Service Equipment Notes
- ☐ ES-2D Signal, Lighting and Electrical Systems- Service Equipment and Typical Wiring Diagram, Type A
- ☐ ES-2E Signal, Lighting and Electrical Systems- Service Equipment and Typical Wiring Diagram, Type B
- ☐ ES-2F Signal, Lighting and Electrical Systems- Service Equipment and Typical Wiring Diagram, Type C
- ☐ ES-3A Signal, Lighting and Electrical Systems- Signal Heads and Mountings
- ☐ ES-3B Signal, Lighting and Electrical Systems- Signal Heads and Mountings
- ☐ ES-3C Signal, Lighting and Electrical Systems- Signal Heads and Mountings
- ☐ ES-3D Signal, Lighting and Electrical Systems- Signal Heads and Mountings
- ☐ ES-3E Signal, Lighting and Electrical Systems- Signal Heads and Mountings
- ☐ ES-4A Signal, Lighting and Electrical Systems- Controller Cabinet Details
- ☐ ES-4B Signal, Lighting and Electrical Systems- Controller Cabinet Details
- ☐ ES-4C Signal, Lighting and Electrical Systems- Controller Cabinet Details
- ☐ ES-4D Irrigation Controller Enclosure Cabinet
- ☐ ES-4E Signal, Lighting and Electrical Systems- Telephone Demarcation Cabinet Details
- ☐ ES-4F Signal, Lighting and Electrical Systems- Telephone Demarcation Cabinet Details
- ☐ ES-5A Signal, Lighting and Electrical Systems- Detectors
- ☐ ES-5B Signal, Lighting and Electrical Systems- Detectors
- ☐ ES-5C Signal, Lighting and Electrical Systems- Detectors
- ☐ ES-5D Signal, Lighting and Electrical Systems- Detectors
- ☐ ES-5E Signal, Lighting and Electrical Systems- Detectors
- ☐ ES-5F Signal, Lighting and Electrical Systems- Pedestrian Barricades
- ☐ ES-6A Signal and Lighting Standards- Type I Standards and Equipment Numbering
- ☐ ES-6AA Signal Standards- Push Button Posts
- ☐ ES-6B Lighting Standards- Types 15, 21 and 22
- ☐ ES-6C Lighting Standards- 24.4 m to 48.8 m High Mast Light Pole, Foundation Details
- ☐ ES-6D Lighting Standards- Types 30 and 31
- ☐ ES-6DA Lighting Standards- Type 32
- ☐ ES-6E Lighting Standards- Types 30 and 31, Slip Base Details
- ☐ ES-6F Lighting Standards- 10 Degree Type
- ☐ ES-6H Lighting Standards- 10 Degree Type, Details
- ☐ ES-6J Signal and Lighting Standards- Case 1 Arm Loading, Wind Velocity = 113 km/h, Arm Lengths 4.5 m to 9.1 m
- ☐ ES-6K Signal and Lighting Standards- Case 2 Arm Loading, Wind Velocity = 113 km/h, Arm Lengths 6.1 m to 9.1 m
- ☐ ES-6L Signal and Lighting Standards- Case 3 Arm Loading, Wind Velocity = 113 km/h, Arm Lengths 4.5 m to 13.7 m
- ☐ ES-6M Signal and Lighting Standards- Case 4 Arm Loading, Wind Velocity = 113 km/h, Arm Lengths 7.6 m to 13.7 m
- ☐ ES-6MA Signal and Lighting Standards- Case 5 Arm Loading, Wind Velocity = 113 km/h, Arm Lengths 15.2 m to 16.8 m
- ☐ ES-6N Signal and Lighting Standards- Type 40-0-129
- ☐ ES-6O Signal and Lighting Standards- Case 1 Arm Loading, Wind Velocity = 129 km/h, Arm Lengths 7.6 m to 9.1 m
- ☐ ES-6P Signal and Lighting Standards- Case 2 Arm Loading, Wind Velocity = 129 km/h, Arm Lengths 6.1 m to 9.1 m
- ☐ ES-6Q Signal and Lighting Standards- Case 3 Arm Loading, Wind Velocity = 129 km/h, Arm Lengths 6.1 m to 13.7 m
- ☐ ES-6R Signal and Lighting Standards- Case 4 Arm Loading, Wind Velocity = 129 km/h, Arm Lengths 7.6 m 13.7 m
- ☐ ES-6RA Signal and Lighting Standards- Case 5 Arm Loading, Wind Velocity = 129 km/h, Arm Lengths 15.2 m to 16.8 m

Caltrans Metric

DIST.	COUNTY	ROUTE	KILOMETER POST TOTAL PROJECT	SHEET NO.	TOTAL SHEETS

The State of California or its officers or agents shall not be responsible for the accuracy or completeness of electronic copies of this plan sheet.

To accompany plans dated _____

- ☐ ES-6S Signal and Lighting Standards- Details No. 1
- ☐ ES-6T Signal and Lighting Standards- Details No. 2
- ☐ ES-6TA Signal and Lighting Standards- Pole and Mast Arm Alternatives
- ☐ ES-6U Lighting Standards- Types 10 and 15 Slip Base Insert
- ☐ ES-6V Signal and Sign Standards- Type 33 Left Turn
- ☐ ES-7A Signal, Lighting and Electrical Systems- Electrical Details, Structure Installations
- ☐ ES-7B Signal, Lighting and Electrical Systems- Electrical Details, Structure Installations
- ☐ ES-7C Signal, Lighting and Electrical Systems- Electrical Details, Structure Installations
- ☐ ES-7D Signal, Lighting and Electrical Systems- Electrical Details, Structure Installations
- ☐ ES-7E Signal, Lighting and Electrical Systems- Electrical Details, Structure Installations
- ☐ ES-7F Signal, Lighting and Electrical Systems- Flush Soffit Luminaire Modification Details, Structure Installation
- ☐ ES-8 Signal, Lighting and Electrical Systems- Pull Box Details
- ☐ ES-9A Signal, Lighting and Electrical Systems- Cantilever Flashing Beacon, Types 9, 9A and 9B
- ☐ ES-9B Signal, Lighting and Electrical Systems- Cantilever Flashing Beacon, Types 9, 9A and 9B
- ☐ ES-10 Signal, Lighting and Electrical Systems- Isolux Diagrams
- ☐ ES-11 Signal, Lighting and Electrical Systems- Foundation Installations
- ☐ ES-12 Signal, Lighting and Electrical Systems- Pedestrian Undercrossing Fluorescent Lighting Fixture
- ☐ ES-13 Signal, Lighting and Electrical Systems- Splicing Details
- ☐ ES-14 Signal, Lighting and Electrical Systems- Wiring Details and Fuse Ratings
- ☐ ES-15 Signal, Lighting and Electrical Systems- Pedestrian Overcrossing Fluorescent Lighting Fixture
- ☐ ES-27A Signal, Lighting and Electrical Systems- Extinguishable Message Sign, 250 mm Letters
- ☐ ES-27B Signal, Lighting and Electrical Systems- Extinguishable Message Sign, 250 mm Letters
- ☐ ES-28 Signal, Lighting and Electrical Systems- Extinguishable Message Sign and Flashing Beacons

SIGN ILLUMINATION

- ☐ ES-29 Sign Illumination- Mercury Sign Illumination Equipment
- ☐ ES-30 Sign Illumination- 915 mm Fluorescent Sign Illumination Equipment
- ☐ ES-32A Sign Illumination- Sign Illumination Equipment
- ☐ ES-32B Sign Illumination- Sign Illumination Control
- ☐ ES-33 Sign Illumination- Internally Illuminated Street Name Sign

SHEET 2 OF 2

STANDARD PLANS LIST

(July, 1995 Edition)

July 3, 1995

The Standard Plan sheets applicable to this contract include, but are not limited to those indicated by a marked box.

TIME PLOTTED => $$$$$$SYTIME$$$$$$
USERNAME => $$$$$$$USER$$$$$$$
$DATE$ $TIME$ $FILE$

ALL DIMENSIONS ARE IN
METERS UNLESS OTHERWISE SHOWN

Caltrans Metric

DIST	COUNTY	ROUTE	KILOMETER POST TOTAL PROJECT	SHEET NO.	TOTAL SHEETS
07	LA				X

REGISTERED CIVIL ENGINEER

PLANS APPROVAL DATE

X

REGISTERED PROFESSIONAL ENGINEER
No.
Exp.
CIVIL
STATE OF CALIFORNIA

BROWN AND CALDWELL
16735 VON KARMAN
IRVINE, CA 92606

The State of California or its officers or agents shall not be responsible for the accuracy or completeness of electronic copies of this plan sheet.

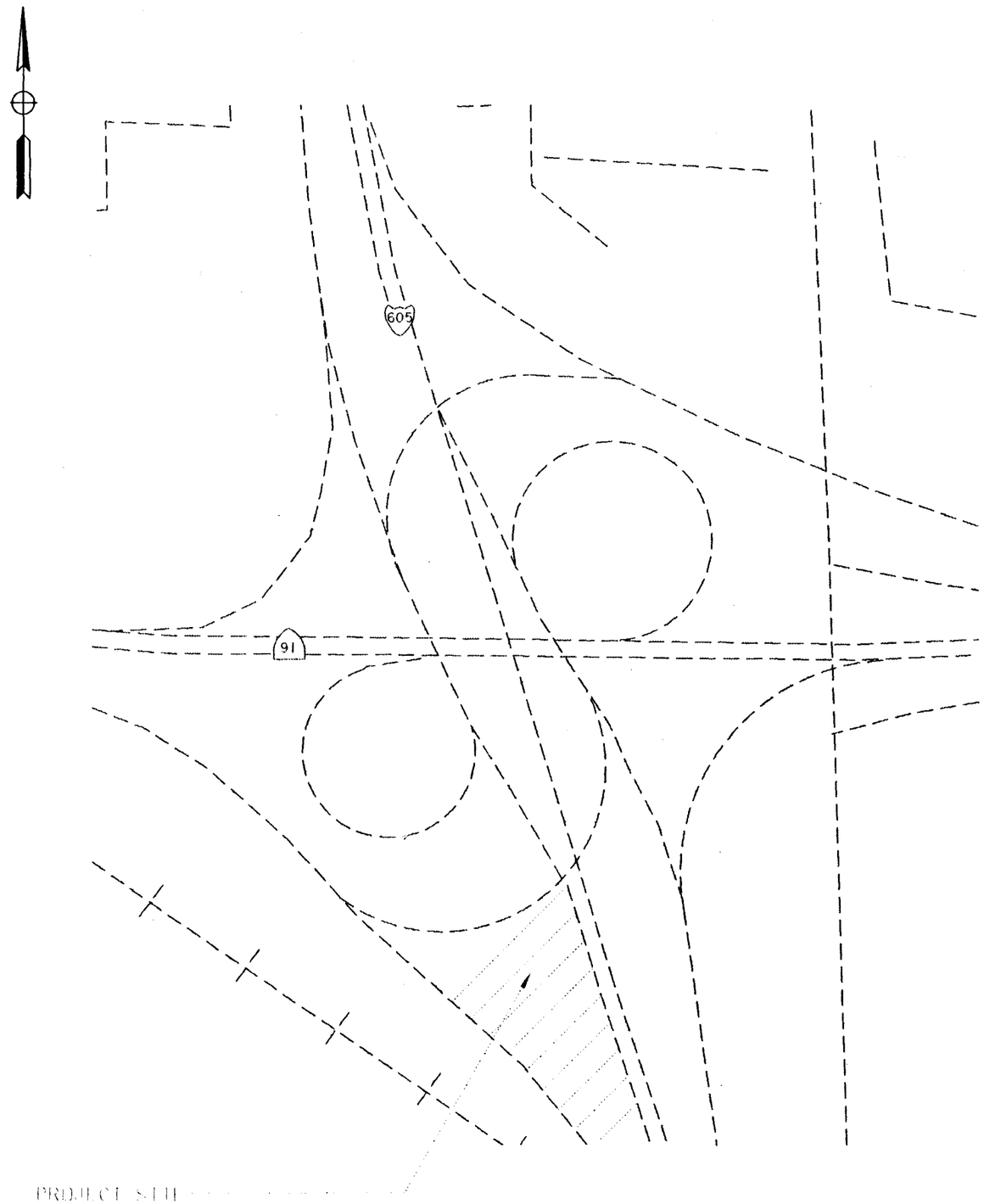

LOCATION MAP AND SURVEY INFORMATION I605/SR91 INTERCHANGE

K-1

STATE OF CALIFORNIA - DEPARTMENT OF TRANSPORTATION
Caltrans

DESIGN OVERSIGHT

CALCULATED/DESIGNED BY | DATE | REVISED BY
CHECKED BY | DATE REVISED

FOR REDUCED PLANS
ORIGINAL SCALE IN MILLIMETERS 0 20 40 60 80

USERNAME => ©©©©©©USER©©©©©©

ALL DIMENSIONS ARE IN METERS UNLESS OTHERWISE SHOWN

Caltrans Metric

DIST	COUNTY	ROUTE	KILOMETER POST TOTAL PROJECT	SHEET NO.	TOTAL SHEETS
07	LA				X

REGISTERED CIVIL ENGINEER

PLANS APPROVAL DATE

X

REGISTERED PROFESSIONAL ENGINEER No. Exp. CIVIL STATE OF CALIFORNIA

BROWN AND CALDWELL
16735 VON KARMAN
IRVINE, CA 92606

The State of California or its officers or agents shall not be responsible for the accuracy or completeness of electronic copies of this plan sheet.

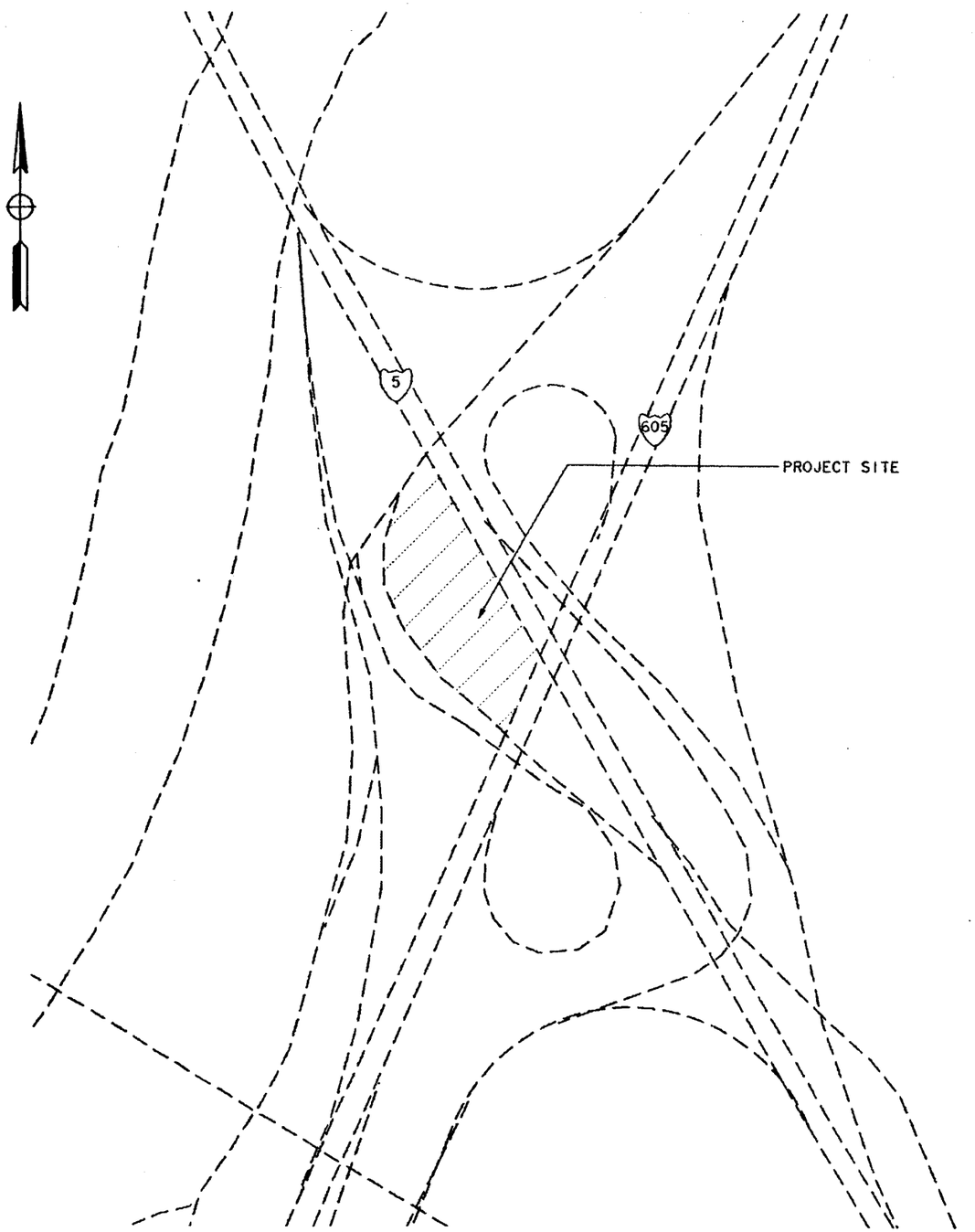

LOCATION MAP AND SURVEY INFORMATION 15/1605 INTERCHANGE

K-2

STATE OF CALIFORNIA - DEPARTMENT OF TRANSPORTATION

Caltrans

DESIGN OVERSIGHT

CALCULATED/DESIGNED BY | CHECKED BY | DATE | REVISED BY | DATE REVISED

FOR REDUCED PLANS ORIGINAL SCALE IN MILLIMETERS 0 20 40 60 80

USERNAME => ******USER******

DIST	COUNTY	ROUTE	KILOMETER POST TOTAL PROJECT	SHEET NO.	TOTAL SHEETS
X	LA	605, 91	X.XX		

REGISTERED CIVIL ENGINEER

PLANS APPROVAL DATE

X

REGISTERED PROFESSIONAL ENGINEER No. Exp. CIVIL STATE OF CALIFORNIA

BROWN AND CALDWELL
16735 VON KARMAN
IRVINE, CA 92606

The State of California or its officers or agents shall not be responsible for the accuracy or completeness of electronic copies of this plan sheet.

Caltrans Metric

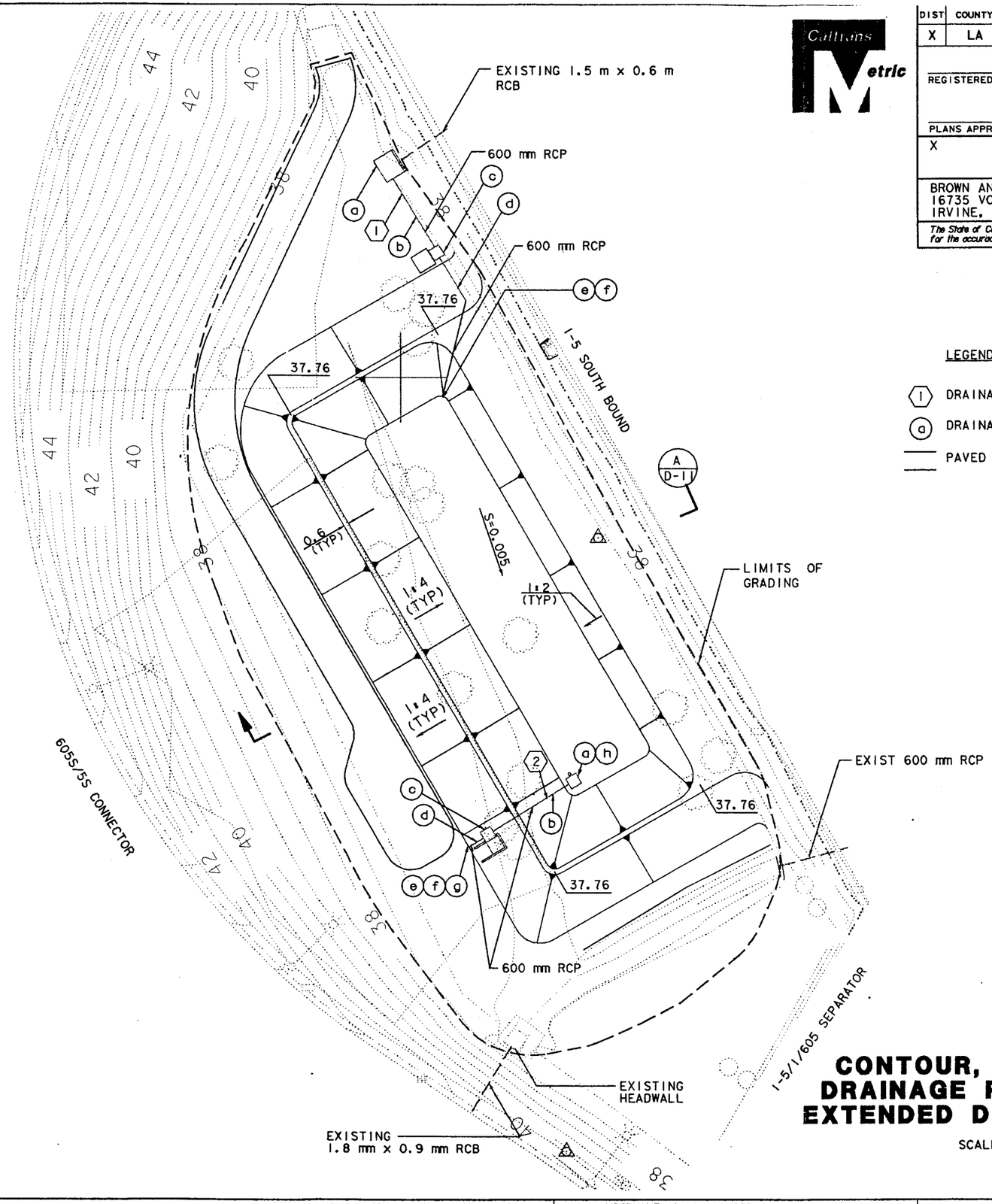

LEGEND

- (1) DRAINAGE SYSTEM NO.
- (a) DRAINAGE UNIT
- PAVED ACCESS ROAD

CONTOUR, GRADING AND DRAINAGE PLAN, I-5/I-605 EXTENDED DETENTION BASIN

SCALE 1:500

D-1

N 549000

E 1990900

DATE	REVISED BY	DATE REVISED
2/97		2/97

CALCULATED/DESIGNED BY

CHECKED BY

DESIGN OVERSIGHT

STATE OF CALIFORNIA - DEPARTMENT OF TRANSPORTATION

Caltrans

FOR REDUCED PLANS ORIGINAL SCALE IN MILLIMETERS 0 20 40 60 80

USERNAME => ******USER******
DGN FILE => **********DGNSPEC**********

CU 00000

EA 000000

DIST	COUNTY	ROUTE	KILOMETER POST TOTAL PROJECT	SHEET NO.	TOTAL SHEETS
X	LA	605, 91	X.XX		

REGISTERED CIVIL ENGINEER

PLANS APPROVAL DATE

X

REGISTERED PROFESSIONAL ENGINEER No. Exp. CIVIL STATE OF CALIFORNIA

BROWN AND CALDWELL
16735 VON KARMAN
IRVINE, CA 92606

The State of California or its officers or agents shall not be responsible for the accuracy or completeness of electronic copies of this plan sheet.

Caltrans Metric

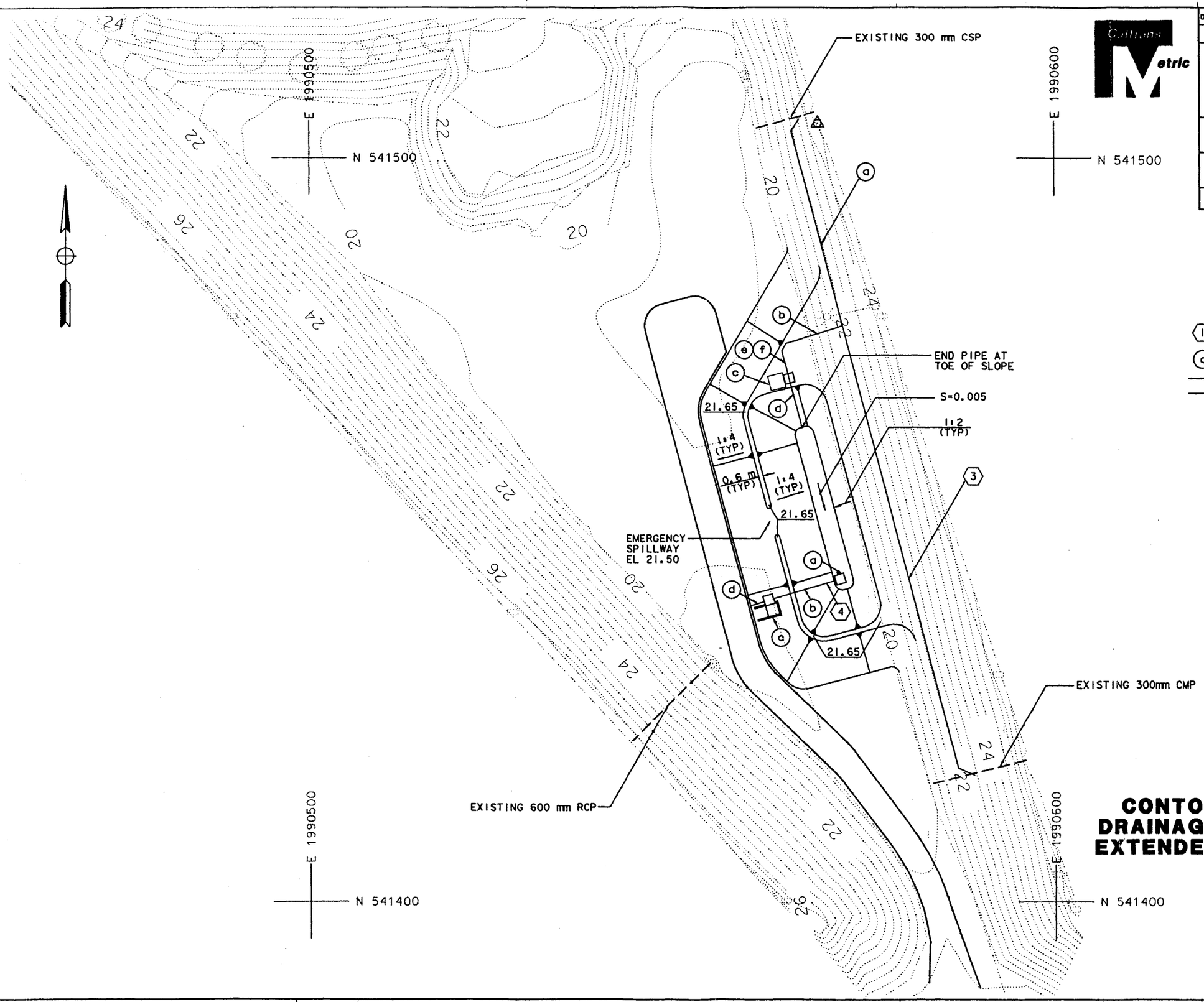

LEGEND

(1) DRAINAGE SYSTEM NO.

(a) DRAINAGE UNIT

PAVED ACCESS ROAD

CONTOUR, GRADING AND DRAINAGE PLAN, I-605/SR91 EXTENDED DETENTION BASIN

SCALE 1:500

D-2

DATE	REVISED BY	DATE REVISED
2/97		2/97

CALCULATED/DESIGNED BY

CHECKED BY

DESIGN OVERLOAD

STATE OF CALIFORNIA - DEPARTMENT OF TRANSPORTATION

Caltrans

FOR REDUCED PLANS ORIGINAL SCALE IN MILLIMETERS 0 20 40 60 80

USERNAME => ●●●●●●USER●●●●●●

Project No. 3
District 7

ALL DIMENSIONS ARE IN METERS UNLESS OTHERWISE SHOWN

Caltrans Metric

DIST.	COUNTY	ROUTE	KILOMETER POST TOTAL PROJECT	SHEET NO.	TOTAL SHEETS
X	LA	605,91	X.XX		

REGISTERED CIVIL ENGINEER

PLANS APPROVAL DATE

X

MONTGOMERY WATSON - CHAUDHARY
750 B Street Suite 1610
San Diego CA 92101-8131

The State of California or its officers or agents shall not be responsible for the accuracy or completeness of electronic copies of this plan sheet.

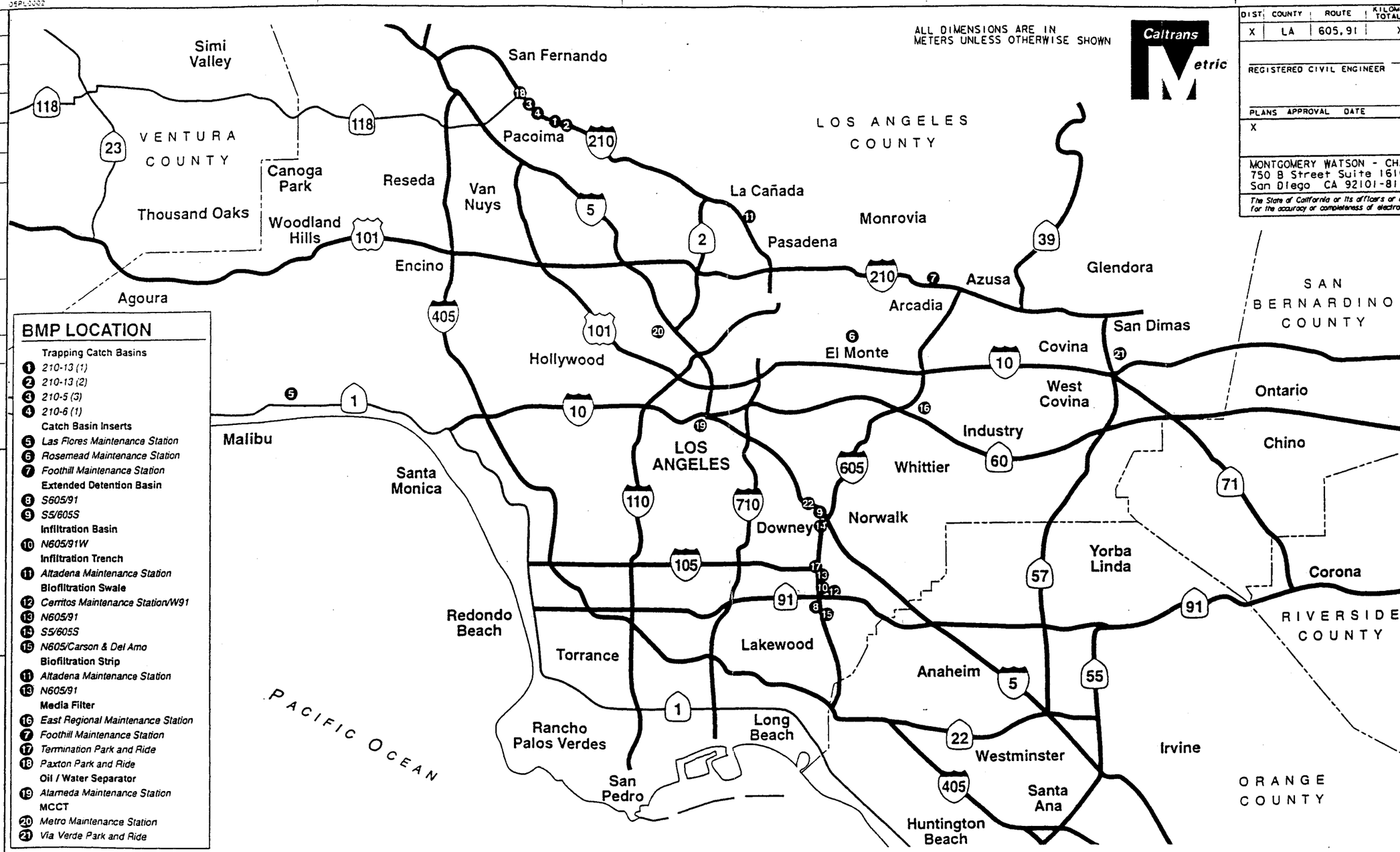

BMP LOCATION

Trapping Catch Basins

1. *210-13 (1)*
2. *210-13 (2)*
3. *210-5 (3)*
4. *210-6 (1)*

Catch Basin Inserts

5. *Las Flores Maintenance Station*
6. *Rosemead Maintenance Station*
7. *Foothill Maintenance Station*

Extended Detention Basin

8. *S605/91*
9. *S5/605S*

Infiltration Basin

10. *N605/91W*

Infiltration Trench

11. *Altadena Maintenance Station*

Biofiltration Swale

12. *Cerritos Maintenance Station/W91*
13. *N605/91*
14. *S5/605S*
15. *N605/Carson & Del Amo*

Biofiltration Strip

11. *Altadena Maintenance Station*
13. *N605/91*

Media Filter

16. *East Regional Maintenance Station*
7. *Foothill Maintenance Station*
17. *Termination Park and Ride*
18. *Paxton Park and Ride*

Oil / Water Separator

19. *Alameda Maintenance Station*

MCCT

20. *Metro Maintenance Station*
21. *Via Verde Park and Ride*

PRELIMINARY CONCEPT

CALTRANS BMP RETROFIT PROGRAM
DISTRICT, 7

MONTGOMERY WATSON - CHAUDHARY
Professional Engineers, Planners, Construction Managers and Surveyors

C&A

FOR REDUCED PLANS ORIGINAL SCALE IN MILLIMETERS 0 20 40 60 80

USERNAME => $$$$$$USER$$$$$$
DGN FILE => $$$$$$$$$$DGNSPEC$$$$$$$$$$

CU 00000

EA 910202

STATE OF CALIFORNIA - DEPARTMENT OF TRANSPORTATION

Caltrans

DESIGN OVERSIGHT

CALCULATED/DESIGNED BY

CHECKED BY

DATE 2/21/98

REVISED BY

DATE REVISED

2/21/98

$DATE$ $TIME$ $FILE$

ALL DIMENSIONS ARE IN METERS UNLESS OTHERWISE SHOWN

Caltrans Metric

DIST	COUNTY	ROUTE	KILOMETER POST TOTAL PROJECT	SHEET NO.	TOTAL SHEETS
X	LA	605.91	X.XX		

REGISTERED CIVIL ENGINEER

PLANS APPROVAL DATE

X

REGISTERED PROFESSIONAL ENGINEER No. Exp. CIVIL STATE OF CALIFORNIA

MONTGOMERY WATSON - CHAUDHARY
750 B Street Suite 1610
San Diego CA 92101-8131

The State of California or its officers or agents shall not be responsible for the accuracy or completeness of electronic copies of this plan sheet.

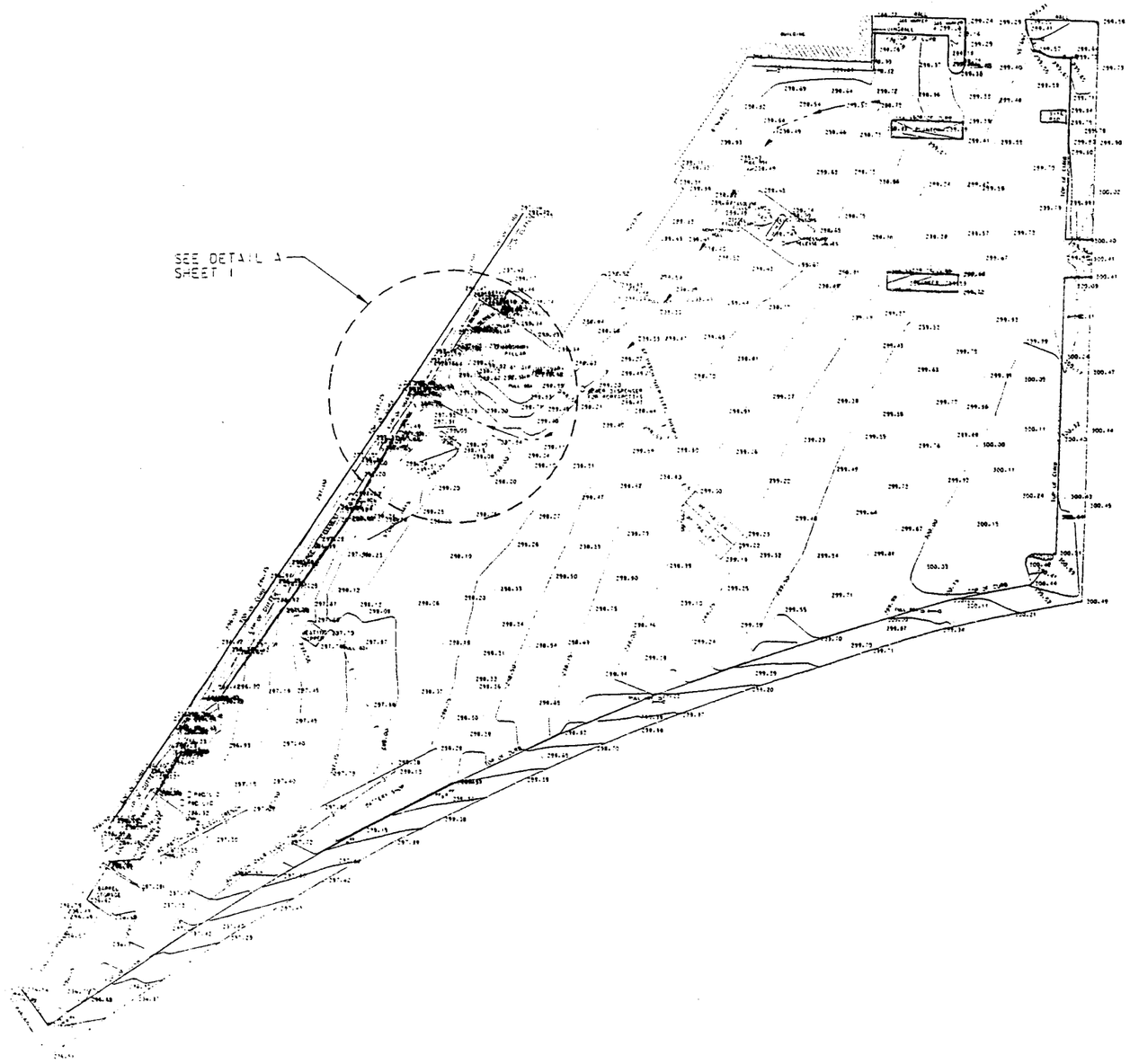

SCALE:
20 METERS

DATE	REVISED BY	DATE REVISED
2/26/98		
2/26/98		

CALCULATED/DESIGNED BY

CHECKED BY

DESIGN OVERSIGHT

STATE OF CALIFORNIA - DEPARTMENT OF TRANSPORTATION

Caltrans

$DATE$ $TIME$ $FILE$

PRELIMINARY CONCEPT

NO. 11 INFILTRATION TRENCH
BIOFILTRATION STRIP
ALTADENA MAINTANENCE STATION
SITE PLAN

MONTGOMERY WATSON - CHAUDHARY
Professional Engineers, Planners, Construction Managers and Surveyors

FOR REDUCED PLANS
ORIGINAL SCALE IN MILLIMETERS 0 20 40 60 80

USERNAME => $$$$$$USER$$$$$$
DGN FILE => $$$$$$$$$$DGNSPEC$$$$$$$$$$

CU 00000

EA 910202

ALL DIMENSIONS ARE IN METERS UNLESS OTHERWISE SHOWN

Caltrans Metric

DIST	COUNTY	ROUTE	KILOMETER POST TOTAL PROJECT	SHEET NO.	TOTAL SHEETS
X	LA	605.91	X.XX		

REGISTERED CIVIL ENGINEER

PLANS APPROVAL DATE

X

REGISTERED PROFESSIONAL ENGINEER No. Exp. CIVIL STATE OF CALIFORNIA

MONTGOMERY WATSON - CHAUDHARY
750 B Street Suite 1610
San Diego CA 92101-8131

The State of California or its officers or agents shall not be responsible for the accuracy or completeness of electronic copies of this plan sheet.

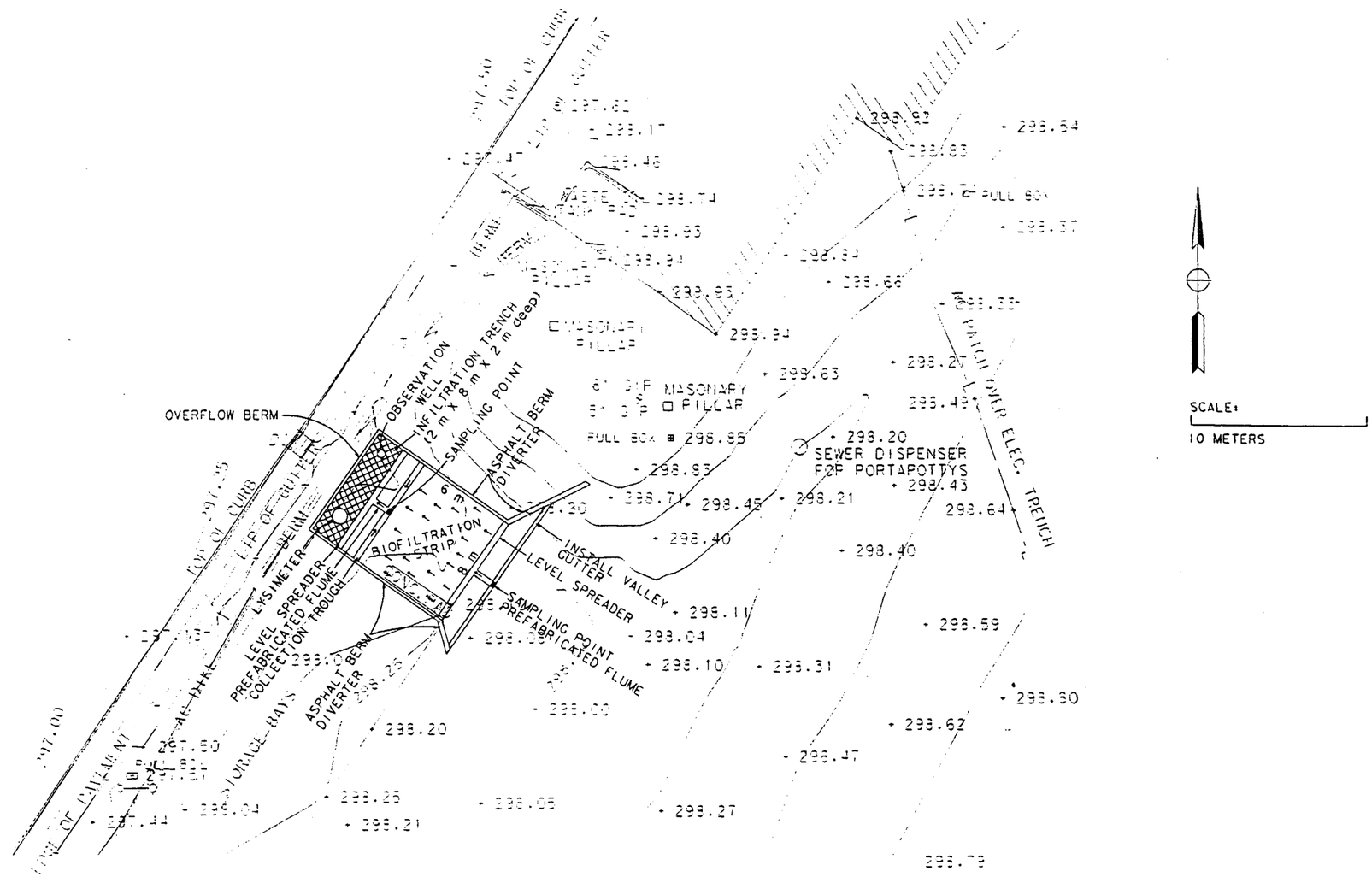

SCALE:
10 METERS

DETAIL A

PRELIMINARY CONCEPT

NO. 11 INFILTRATION TRENCH
BIOFILTRATION STRIP
ALTADENA MAINTANENCE STATION
SHEET 1

MONTGOMERY WATSON - CHAUDHARY
Professional Engineers, Planners, Construction Managers and Surveyors

C&A

CALCULATED/ DESIGNED BY	DATE 2/26/98	REVISED BY	
CHECKED BY	2/26/98	DATE REVISED	

DESIGN OVERSIGHT

STATE OF CALIFORNIA - DEPARTMENT OF TRANSPORTATION

Caltrans

$DATE$ $TIME$ $FILE$

FOR REDUCED PLANS ORIGINAL SCALE IN MILLIMETERS 0 20 40 60 80

USERNAME => $$$$$$USER$$$$$$
DGN FILE => $$$$$$$$$$DGNSPEC$$$$$$$$$$

CU 00000 EA 910202

ALL DIMENSIONS ARE IN METERS UNLESS OTHERWISE SHOWN

Caltrans Metric

DIST	COUNTY	ROUTE	KILOMETER POST TOTAL PROJECT	SHEET NO.	TOTAL SHEETS
X	LA	605.91	X.XX		

REGISTERED CIVIL ENGINEER

PLANS APPROVAL DATE

X

REGISTERED PROFESSIONAL ENGINEER No. Exp. CIVIL STATE OF CALIFORNIA

MONTGOMERY WATSON - CHAUDHARY
750 B Street Suite 1610
San Diego CA 92101-8131

The State of California or its officers or agents shall not be responsible for the accuracy or completeness of electronic copies of this plan sheet.

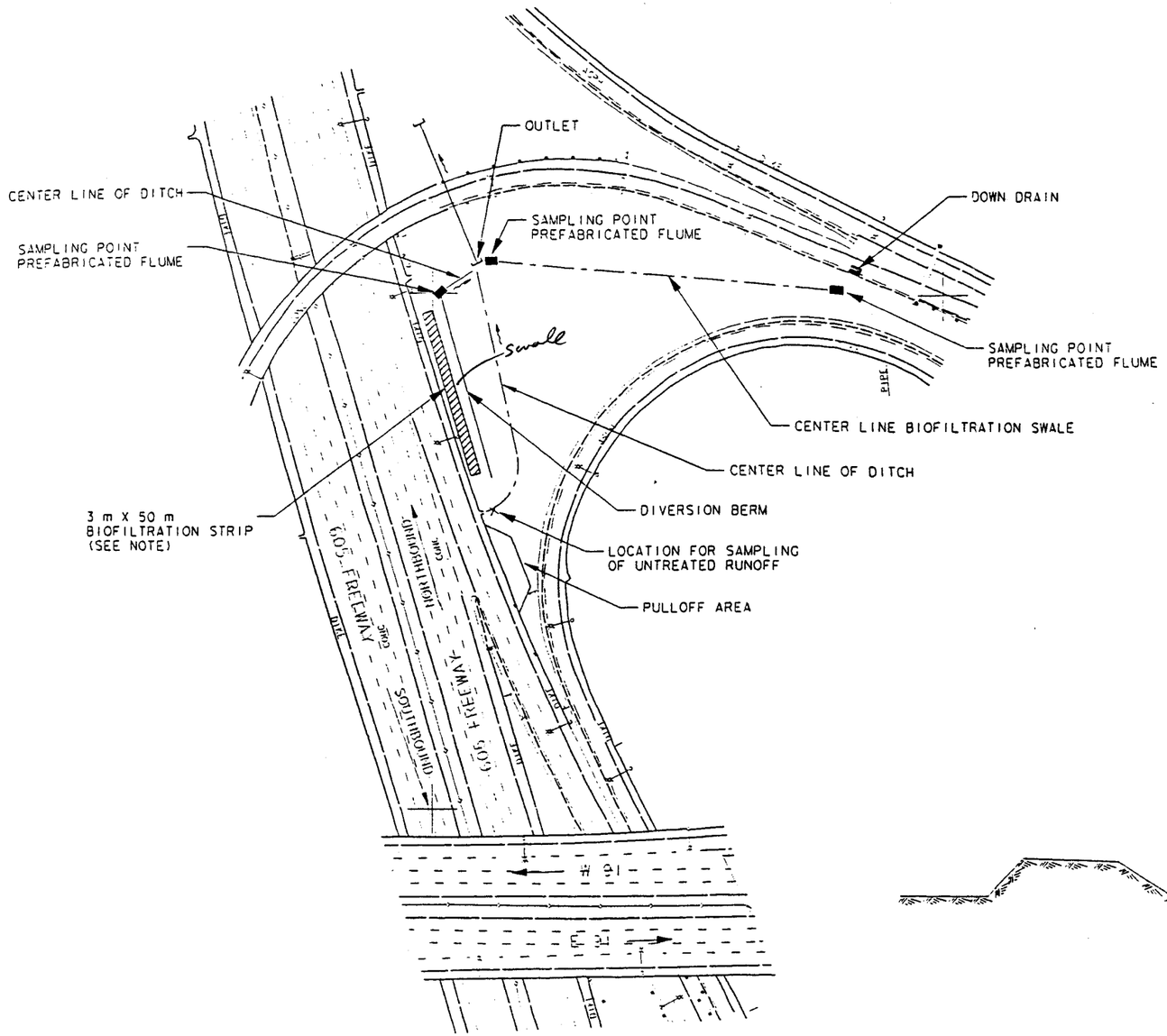

SCALE:
50 METERS

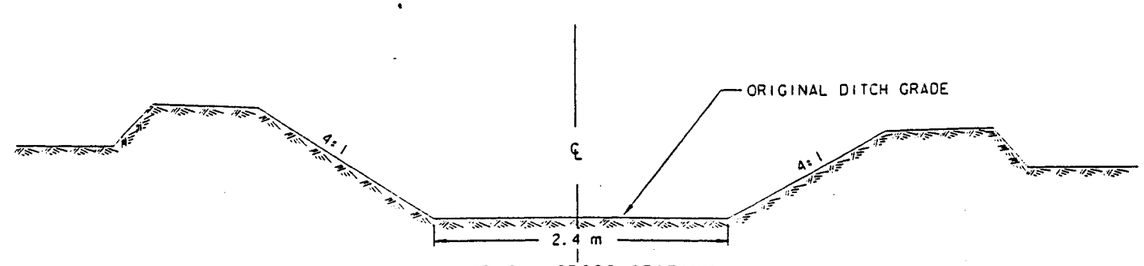

TYPICAL CROSS SECTION
BIOFILTRATION SWALE

NOTE: REPLACE ASPHALT DIKE FOR 50 m ALONG BIOFILTRATION STRIP WITH CURB SLOTTED AT 2 m INTERVALS TO ACCOMADATE DRAINAGE FROM SHOULDER

PRELIMINARY CONCEPT

NO. 13 BIOFILTRATION STRIP
BIOFILTRATION SWALE
N605/91 (N) INTERCHANGE

MONTGOMERY WATSON - CHAUDHARY
Professional Engineers, Planners, Construction Managers and Surveyors

C&A

DATE	CALCULATED/ DESIGNED BY	CHECKED BY	REVISED BY	DATE REVISED
2/26/98				

DESIGN OVERSIGHT

STATE OF CALIFORNIA - DEPARTMENT OF TRANSPORTATION
Caltrans

$DATE$ $TIME$ $FILE$

FOR REDUCED PLANS ORIGINAL SCALE IN MILLIMETERS 0 20 40 60 80

USERNAME => $$$$$$USER$$$$$$
DGN FILE => $$$$$$$$$$DGNSPEC$$$$$$$$$$

CU 00000 EA 910202

ALL DIMENSIONS ARE IN METERS UNLESS OTHERWISE SHOWN

Caltrans Metric

DIST	COUNTY	ROUTE	KILOMETER POST TOTAL PROJECT	SHEET NO.	TOTAL SHEETS
X	LA	605.91	X.XX		

REGISTERED CIVIL ENGINEER

PLANS APPROVAL DATE

X

REGISTERED PROFESSIONAL ENGINEER No. Exp. CIVIL STATE OF CALIFORNIA

MONTGOMERY WATSON - CHAUDHARY
750 B Street Suite 1610
San Diego CA 92101-8131

The State of California or its officers or agents shall not be responsible for the accuracy or completeness of electronic copies of this plan sheet.

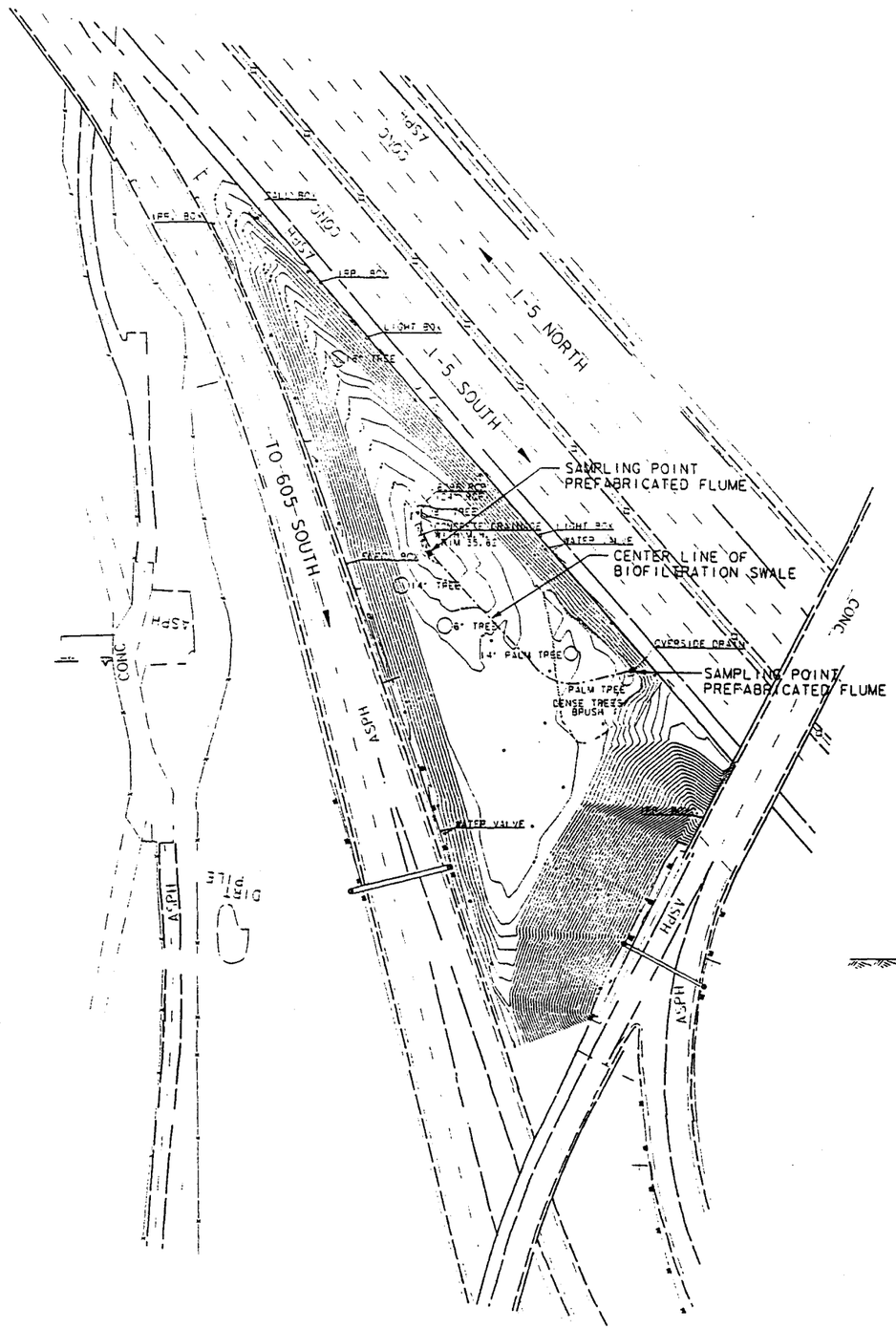

SCALE:

50 METERS

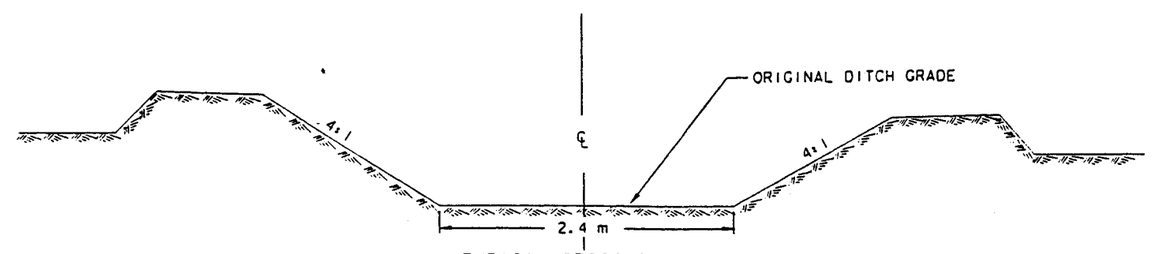

TYPICAL CROSS SECTION
BIOFILTRATION SWALE

PRELIMINARY CONCEPT

NO. 14 BIOFILTRATION SWALE
S5/S605 (N) INTERCHANGE

MONTGOMERY WATSON - CHAUDHARY
Professional Engineers, Planners, Construction Managers and Surveyors

DATE	REVISED BY
2/26/98	DATE REVISED

CALCULATED/DESIGNED BY
CHECKED BY
DESIGN OVERSIGHT

STATE OF CALIFORNIA - DEPARTMENT OF TRANSPORTATION
Caltrans

$DATE$ $TIME$ $FILE$

FOR REDUCED PLANS ORIGINAL SCALE IN MILLIMETERS 0 20 40 60 80

USERNAME => $$$$$$USER$$$$$$
DGN FILE => $$$$$$$$$$DGNSPEC$$$$$$$$$$

CU 00000

EA 910202

ALL DIMENSIONS ARE IN METERS UNLESS OTHERWISE SHOWN

Caltrans Metric

DIST	COUNTY	ROUTE	KILOMETER POST TOTAL PROJECT	SHEET NO.	TOTAL SHEETS
X	LA	605.91	X.XX		

REGISTERED CIVIL ENGINEER

PLANS APPROVAL DATE

X

REGISTERED PROFESSIONAL ENGINEER No. Exp. CIVIL STATE OF CALIFORNIA

MONTGOMERY WATSON - CHAUDHARY
750 B Street Suite 1610
San Diego CA 92101-8131

The State of California or its officers or agents shall not be responsible for the accuracy or completeness of electronic copies of this plan sheet.

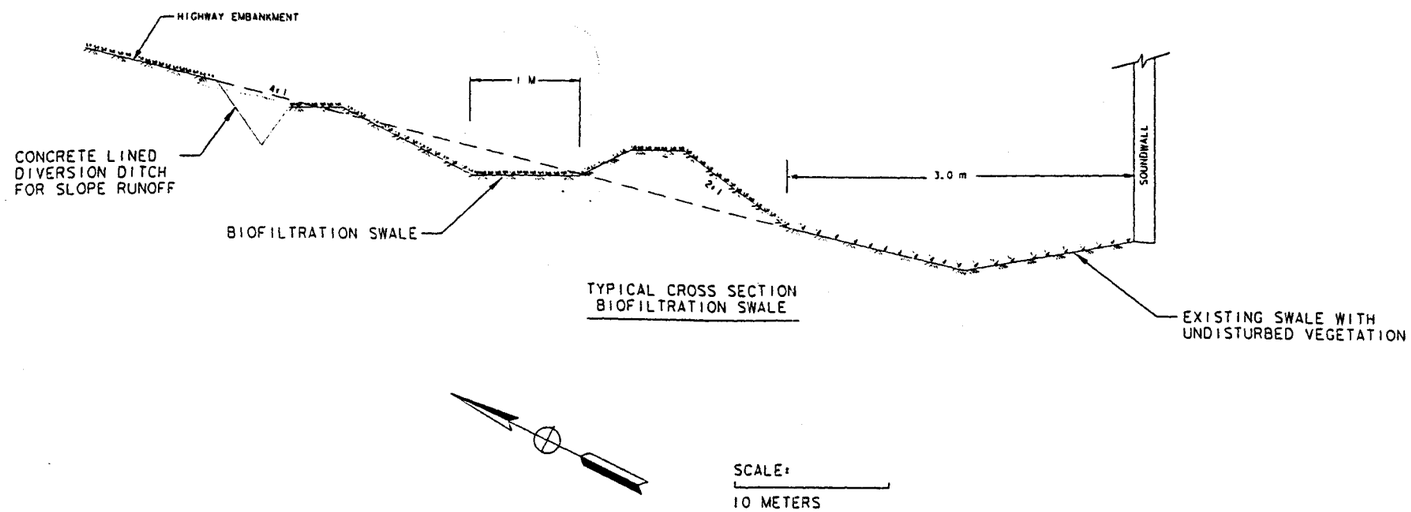

TYPICAL CROSS SECTION
BIOFILTRATION SWALE

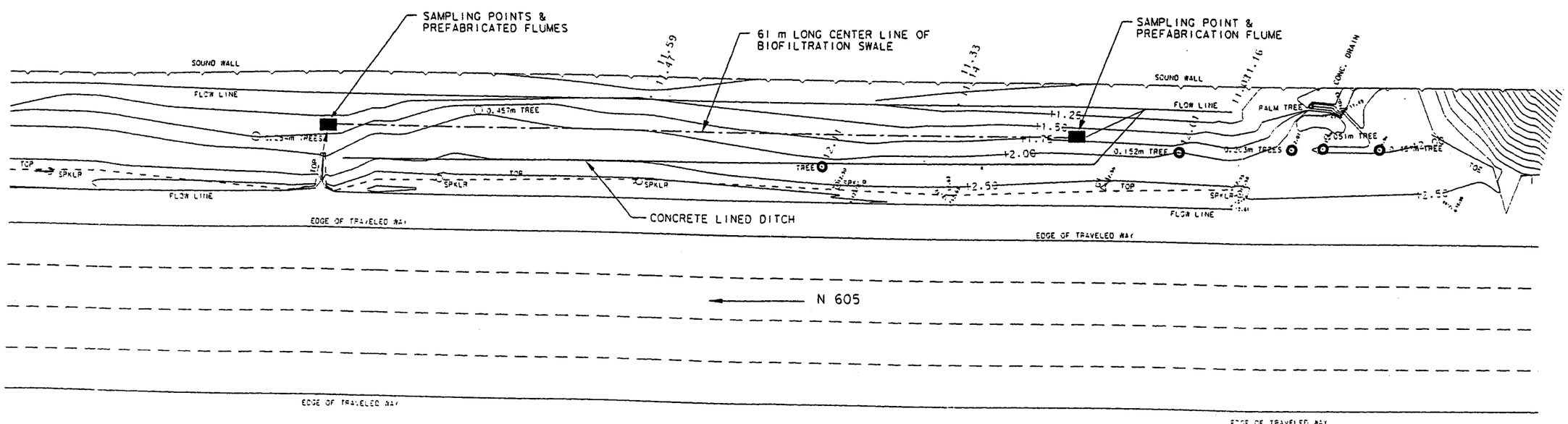

PRELIMINARY CONCEPT

NO. 15 BIOFILTRATION SWALE
N605/CARSON
& DEL AMO INTERCHANGE

MONTGOMERY WATSON - CHAUDHARY
Professional Engineers, Planners, Construction Managers and Surveyors

C&A

DESIGN OVERSIGHT

STATE OF CALIFORNIA - DEPARTMENT OF TRANSPORTATION

Caltrans

CALCULATED/DESIGNED BY	DATE 2/26/98	REVISED BY
CHECKED BY	2/26/98	DATE REVISED

$DATES $TIMES $FILES

FOR REDUCED PLANS ORIGINAL SCALE IN MILLIMETERS 0 20 40 60 80

USERNAME => $$$$$$USER$$$$$$
DGN FILE => $$$$$$$$$$DGNSPEC$$$$$$$$$$

CU 00000

EA 910202

DIST	COUNTY	ROUTE	KILOMETER POST TOTAL PROJECT	SHEET NO.	TOTAL SHEETS
X	LA	605.91	X.XX		

REGISTERED CIVIL ENGINEER

PLANS APPROVAL DATE

X

REGISTERED PROFESSIONAL ENGINEER No. Exp. CIVIL STATE OF CALIFORNIA

MONTGOMERY WATSON - CHAUDHARY
750 B Street Suite 1610
San Diego CA 92101-8131

The State of California or its officers or agents shall not be responsible for the accuracy or completeness of electronic copies of this plan sheet.

ALL DIMENSIONS ARE IN METERS UNLESS OTHERWISE SHOWN

Caltrans Metric

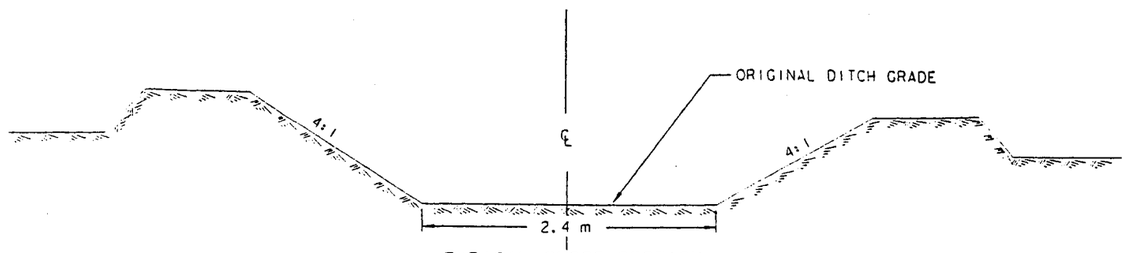

TYPICAL CROSS SECTION
BIOFILTRATION SWALE

SCALE:
20 METERS

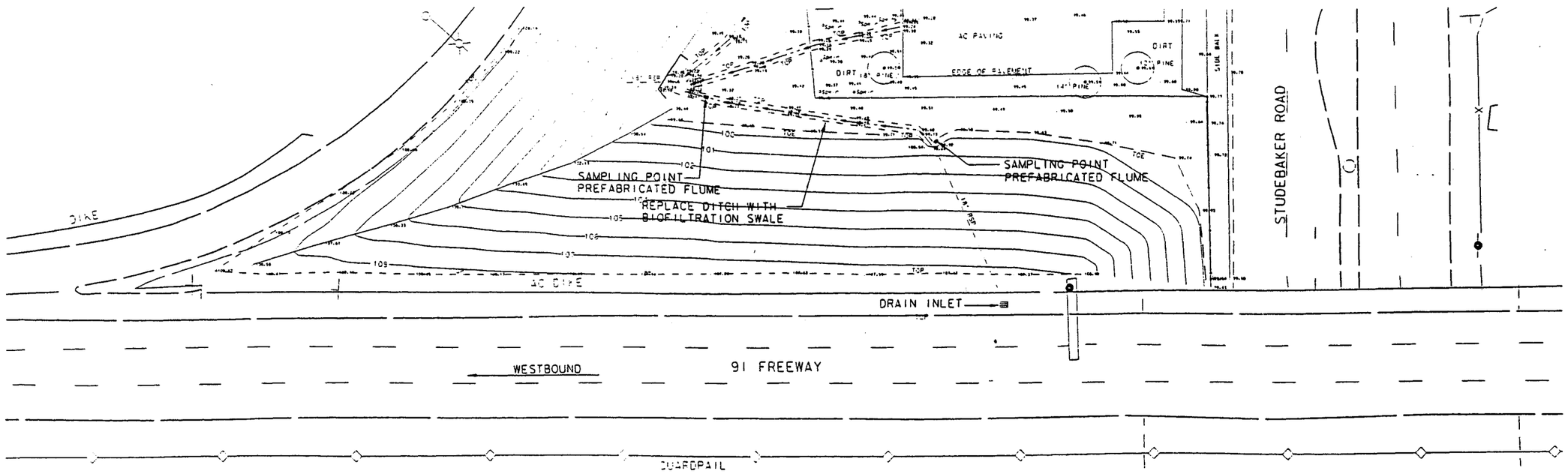

PRELIMINARY CONCEPT

NO. 12 BIOFILTRATION SWALE
W 91 BEHIND CERRITOS MS

MONTGOMERY WATSON - CHAUDHARY
Professional Engineers, Planners, Construction Managers and Surveyors

C&A

STATE OF CALIFORNIA - DEPARTMENT OF TRANSPORTATION
Caltrans

DESIGN OVERSIGHT

CALCULATED/DESIGNED BY | DATE 2/26/98 | REVISED BY
CHECKED BY | DATE 2/26/98 | DATE REVISED

$DATE$ $TIME$ $FILE$

FOR REDUCED PLANS
ORIGINAL SCALE IN MILLIMETERS 0 20 40 60 80

USERNAME => $$$$$$USER$$$$$$
DGN FILE => $$$$$$$$$$DGNSPEC$$$$$$$$$$

CU 00000

EA 910202

ALL DIMENSIONS ARE IN METERS UNLESS OTHERWISE SHOWN

Caltrans Metric

DIST.	COUNTY	ROUTE	KILOMETER POST TOTAL PROJECT	SHEET NO.	TOTAL SHEETS
X	LA	605.91	X.XX		

REGISTERED CIVIL ENGINEER

PLANS APPROVAL DATE

X

No. Exp. CIVIL

MONTGOMERY WATSON - CHAUDHARY
750 B Street Suite 1610
San Diego CA 92101-8131

The State of California or its officers or agents shall not be responsible for the accuracy or completeness of electronic copies of this plan sheet.

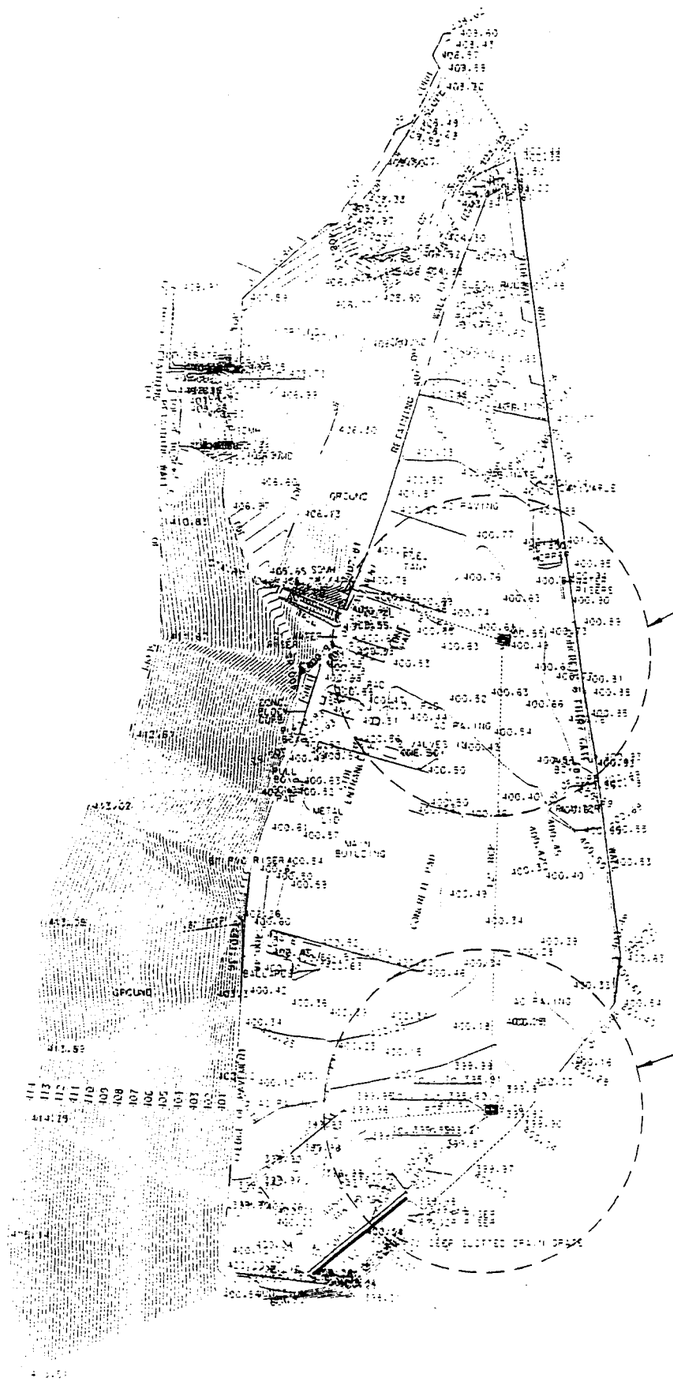

SCALE:

10 METERS

PRELIMINARY CONCEPT

NO. 5 CATCH BASIN INSERTS
LAS FLORES MAINTENANCE STATION

MONTGOMERY WATSON - CHAUDHARY
Professional Engineers, Planners, Construction Managers and Surveyors

C&A

DESIGN OVERSIGHT

CALCULATED/DESIGNED BY

CHECKED BY

DATE 2/26/98

DATE 2/26/98

REVISED BY

DATE REVISED

STATE OF CALIFORNIA - DEPARTMENT OF TRANSPORTATION

Caltrans

$DATES $TIMES $FILES

FOR REDUCED PLANS ORIGINAL SCALE IN MILLIMETERS 0 20 40 60 80

USERNAME => $$$$$$USER$$$$$$
DGN FILE => $$$$$$$$$$DGNSPEC$$$$$$$$$$

CU 00000

EA 910202

ALL DIMENSIONS ARE IN
METERS UNLESS OTHERWISE SHOWN

Caltrans Metric

DIST	COUNTY	ROUTE	KILOMETER POST TOTAL PROJECT	SHEET TOTAL NO. SHEETS
X	LA	605.91	X.XX	

REGISTERED CIVIL ENGINEER

PLANS APPROVAL DATE

X

REGISTERED PROFESSIONAL ENGINEER No. Exp. CIVIL STATE OF CALIFORNIA

MONTGOMERY WATSON - CHAUDHARY
750 B Street Suite 1610
San Diego CA 92101-8131

The State of California or its officers or agents shall not be responsible for the accuracy or completeness of electronic copies of this plan sheet.

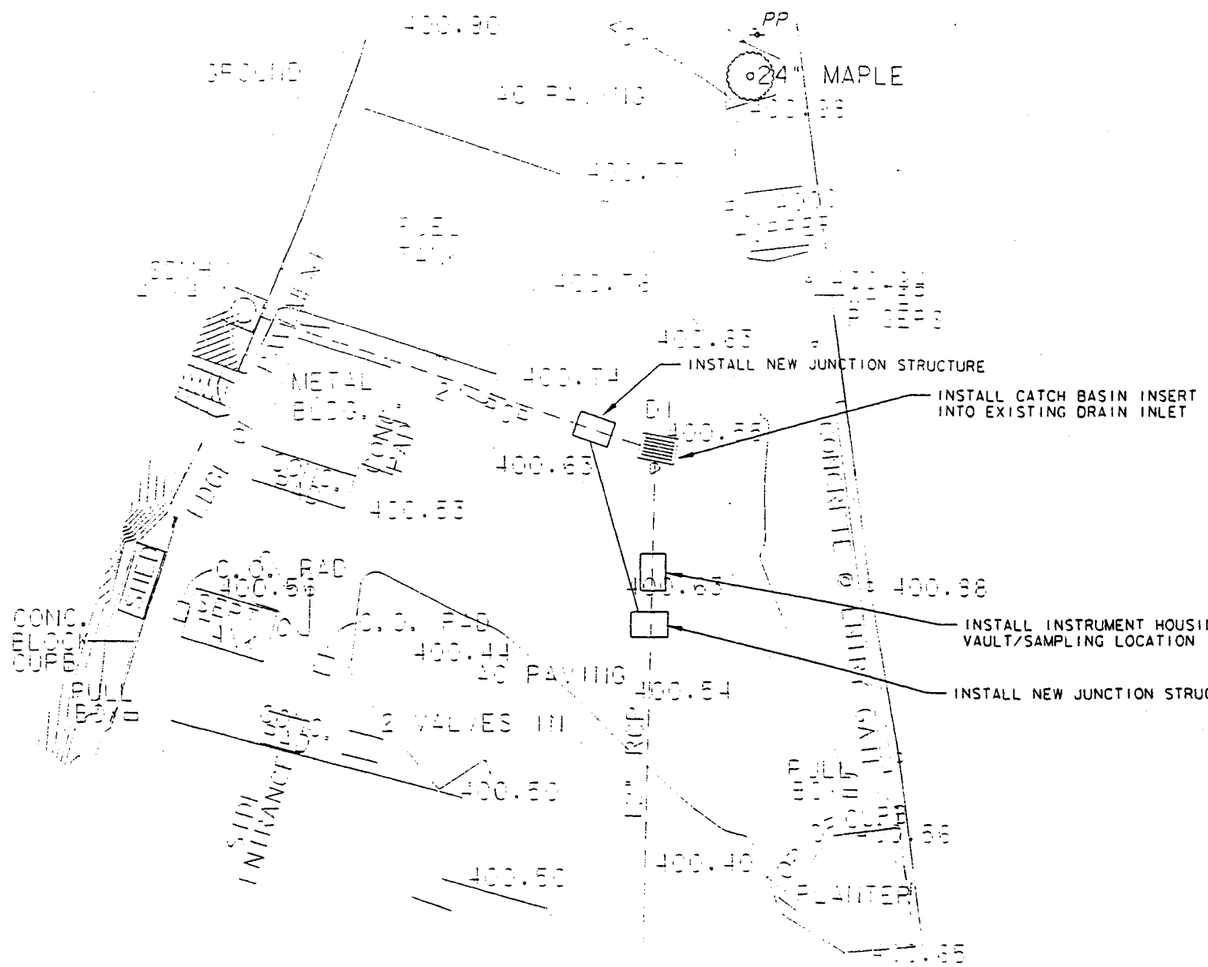

SCALE:

10 METERS

DETAIL A

PRELIMINARY CONCEPT

NO. 5 CATCH BASIN INSERT
LAS FLORES MAINTENANCE STATION
SHEET 1

MONTGOMERY WATSON - CHAUDHARY
Professional Engineers, Planners,
Construction Managers and Surveyors

C&A

DATE	REVISED BY	DATE REVISED
2/26/98		

CALCULATED/DESIGNED BY
CHECKED BY

DESIGN OVERSIGHT

STATE OF CALIFORNIA - DEPARTMENT OF TRANSPORTATION

Caltrans

$DATE$ $TIME$ $FILE$

FOR REDUCED PLANS
ORIGINAL SCALE IN MILLIMETERS 0 20 40 60 80

USERNAME => $$$$$$USER$$$$$$
DGN FILE => $$$$$$$$$$DGNSPEC$$$$$$$$$$

CU 00000

EA 910202

ALL DIMENSIONS ARE IN
METERS UNLESS OTHERWISE SHOWN

Caltrans Metric

DIST	COUNTY	ROUTE	KILOMETER POST TOTAL PROJECT	SHEET NO.	TOTAL SHEETS
X	LA	605.91	X.XX		

REGISTERED CIVIL ENGINEER

PLANS APPROVAL DATE

X

REGISTERED PROFESSIONAL ENGINEER No. Exp. CIVIL STATE OF CALIFORNIA

MONTGOMERY WATSON - CHAUDHARY
750 B Street Suite 1610
San Diego CA 92101-8131

The State of California or its officers or agents shall not be responsible for the accuracy or completeness of electronic copies of this plan sheet.

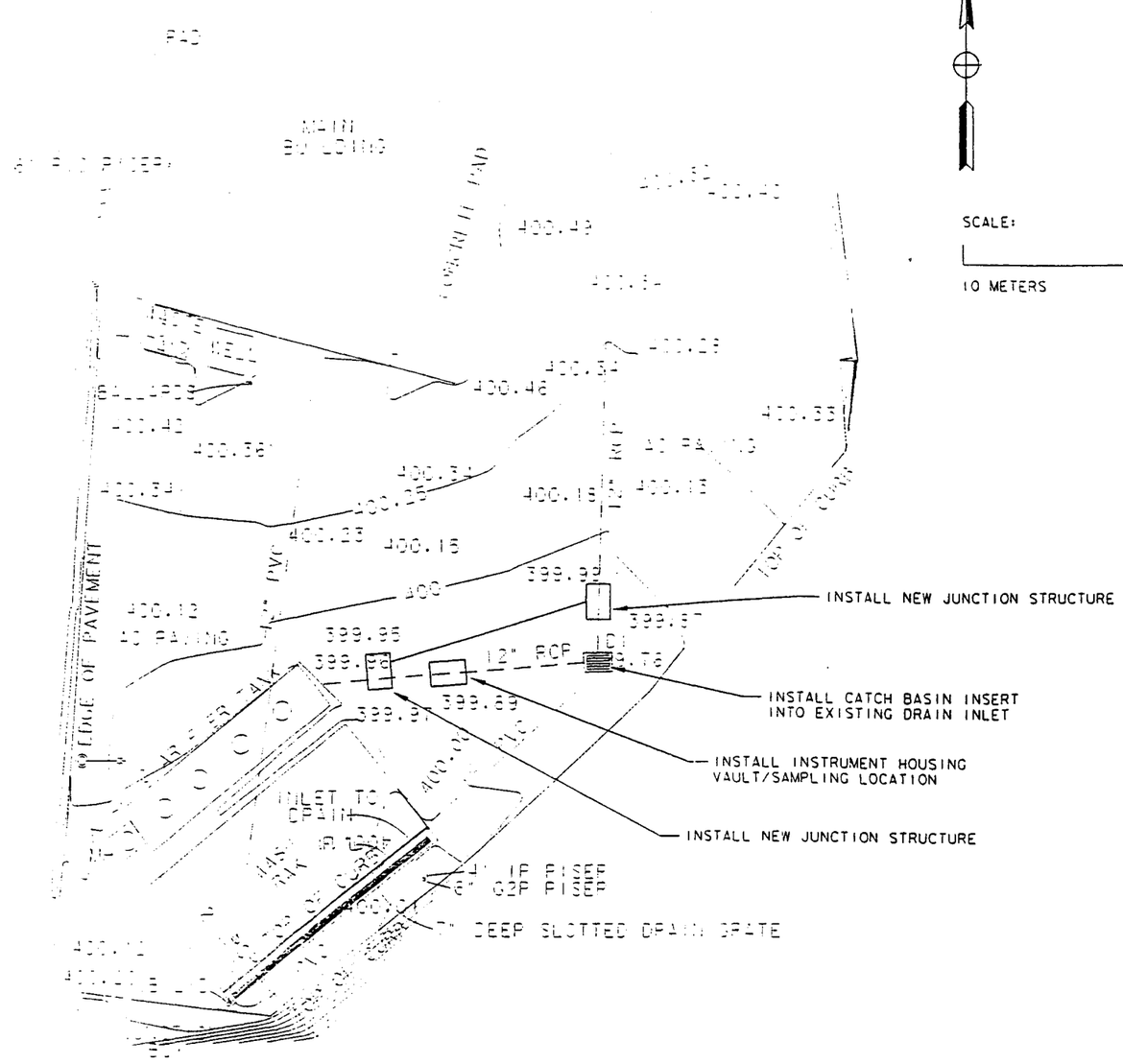

DETAIL B

PRELIMINARY CONCEPT

NO. 5 CATCH BASIN INSERT
LAS FLORES MAINTENANCE STATION
SHEET 2

MONTGOMERY WATSON - CHAUDHARY
Professional Engineers, Planners,
Construction Managers and Surveyors

DESIGN OVERSIGHT

CALCULATED/DESIGNED BY
CHECKED BY

DATE 2/26/98
2/26/98

REVISED BY
DATE REVISED

STATE OF CALIFORNIA - DEPARTMENT OF TRANSPORTATION
Caltrans

$DATE$ $TIME$ $FILE$

FOR REDUCED PLANS
ORIGINAL SCALE IN MILLIMETERS 0 20 40 60 80

USERNAME => $$$$$$USER$$$$$$
DGN FILE => $$$$$$$$$$DGNSPEC$$$$$$$$$$

CU 00000 EA 910202

ALL DIMENSIONS ARE IN METERS UNLESS OTHERWISE SHOWN

Caltrans Metric

DIST	COUNTY	ROUTE	KILOMETER POST TOTAL PROJECT	SHEET NO.	TOTAL SHEETS
X	LA	605.91	X.XX	.	

REGISTERED CIVIL ENGINEER

PLANS APPROVAL DATE

X

REGISTERED PROFESSIONAL ENGINEER No. Exp. CIVIL STATE OF CALIFORNIA

MONTGOMERY WATSON - CHAUDHARY
750 B Street Suite 1610
San Diego CA 92101-8131

The State of California or its officers or agents shall not be responsible for the accuracy or completeness of electronic copies of this plan sheet.

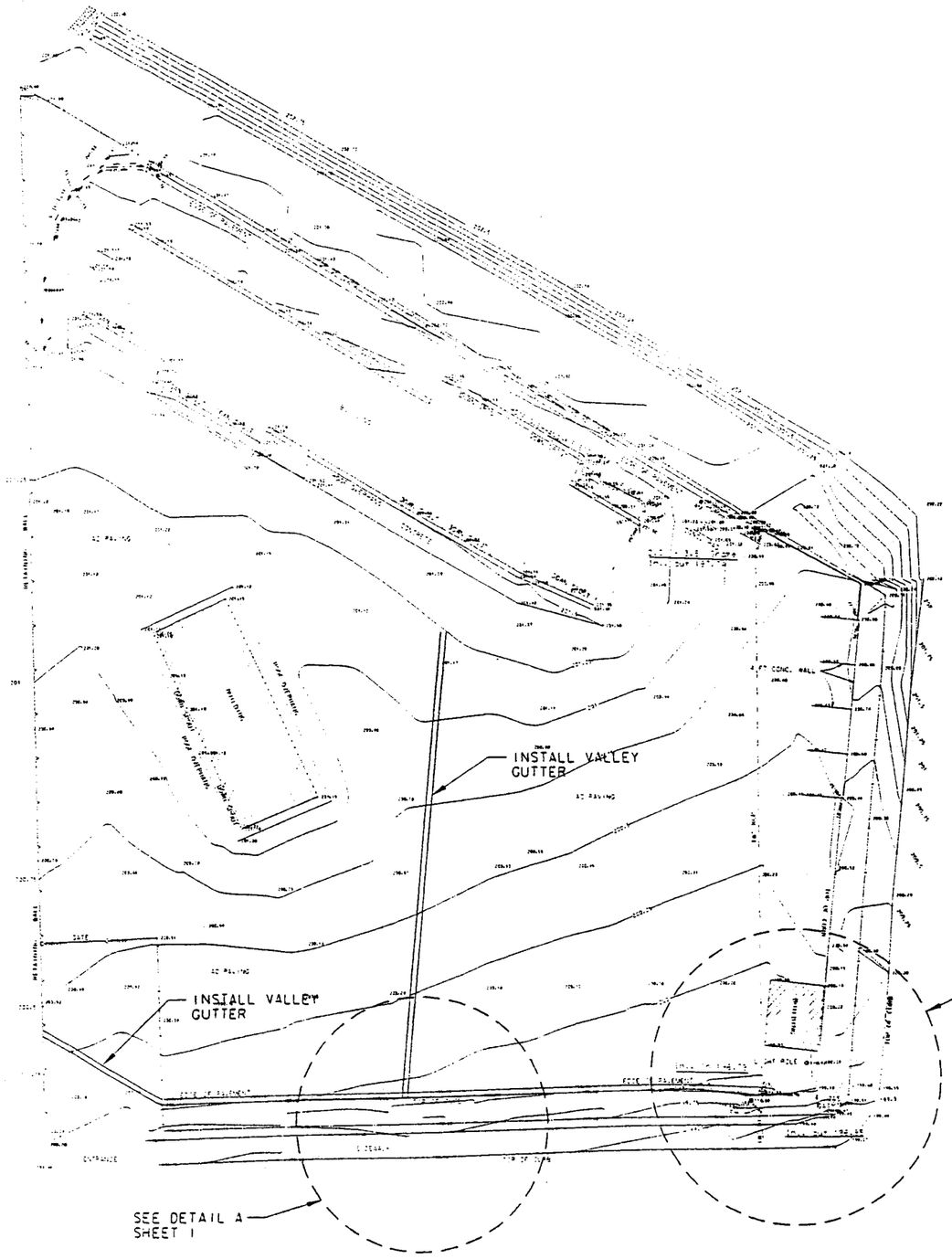

SCALE:
20 METERS

PRELIMINARY CONCEPT

NO. 6 CATCH BASIN INSERTS
ROSEMEAD MAINTANENCE STATION
SITE PLAN

MONTGOMERY WATSON - CHAUDHARY
Professional Engineers, Planners, Construction Managers and Surveyors

C&A

CALCULATED/ DESIGNED BY	DATE 2/26/98	REVISED BY	
CHECKED BY	2/26/98	DATE REVISED	

DESIGN OVERSIGHT

STATE OF CALIFORNIA - DEPARTMENT OF TRANSPORTATION

Caltrans

$DATE$ $TIME$ $FILE$

FOR REDUCED PLANS ORIGINAL SCALE IN MILLIMETERS 0 20 40 60 80

USERNAME => $$$$$$USER$$$$$$
DGN FILE => $$$$$$$$$$DGNSPEC$$$$$$$$$$

CU 00000

EA 910202

ALL DIMENSIONS ARE IN
METERS UNLESS OTHERWISE SHOWN

Caltrans Metric

DIST.	COUNTY	ROUTE	KILOMETER POST TOTAL PROJECT	SHEET NO.	TOTAL SHEETS
X	LA	605.91	X.XX		

REGISTERED CIVIL ENGINEER

PLANS APPROVAL DATE

X

REGISTERED PROFESSIONAL ENGINEER
No.
Exp.
CIVIL
STATE OF CALIFORNIA

MONTGOMERY WATSON - CHAUDHARY
750 B Street Suite 1610
San Diego CA 92101-8131

The State of California or its officers or agents shall not be responsible for the accuracy or completeness of electronic copies of this plan sheet.

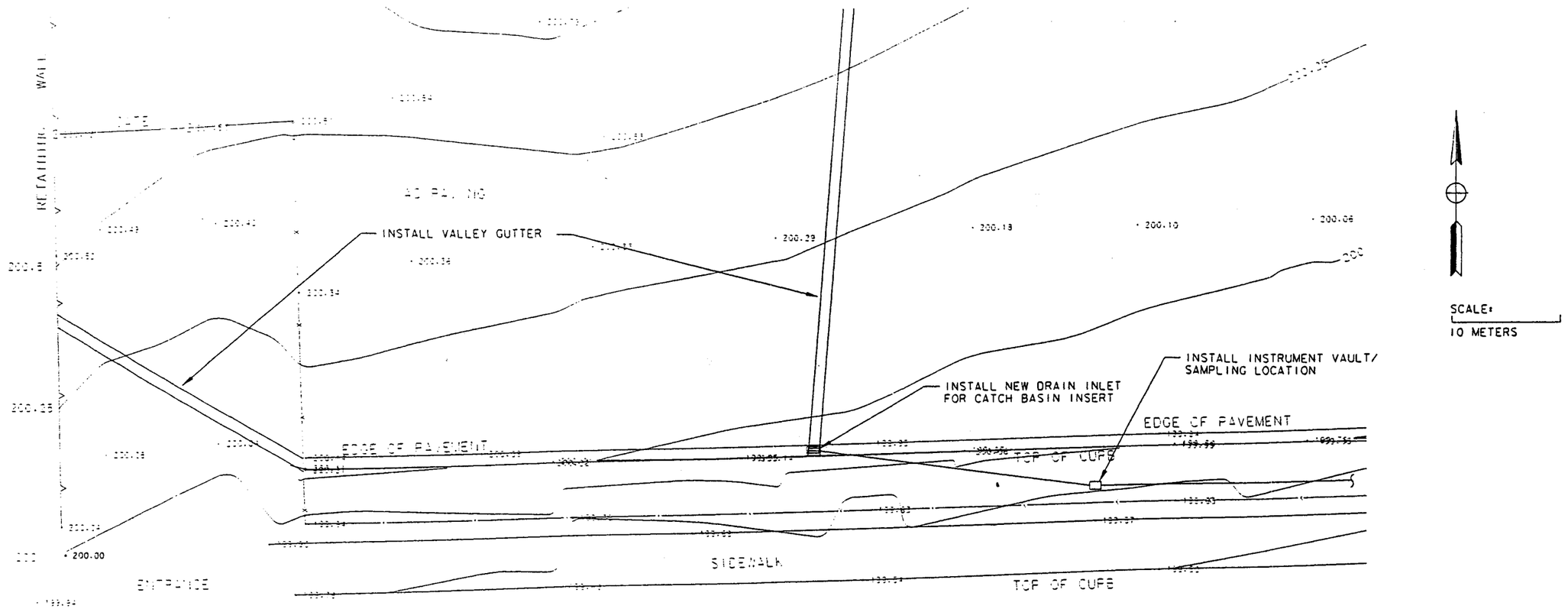

PRELIMINARY CONCEPT

NO. 6 CATCH BASIN INSERT
ROSEMEAD MAINTANENCE STATION
SHEET 1

MONTGOMERY WATSON - CHAUDHARY
Professional Engineers, Planners,
Construction Managers and Surveyors

C&A

DESIGN OVERSIGHT

CALCULATED/DESIGNED BY

CHECKED BY

DATE 2/26/98

REVISED BY

DATE 2/26/98

DATE REVISED

STATE OF CALIFORNIA - DEPARTMENT OF TRANSPORTATION

Caltrans

$DATE$ $TIME$ $FILE$

FOR REDUCED PLANS
ORIGINAL SCALE IN MILLIMETERS 0 20 40 60 80

USERNAME => $$$$$$USER$$$$$$
DGN FILE => $$$$$$$$$$DGNSPEC$$$$$$$$$$

CU 00000

EA 910202

ALL DIMENSIONS ARE IN METERS UNLESS OTHERWISE SHOWN

Caltrans Metric

DIST	COUNTY	ROUTE	KILOMETER POST TOTAL PROJECT	SHEET NO.	TOTAL SHEETS
X	LA	605.91	X.XX		

REGISTERED CIVIL ENGINEER

PLANS APPROVAL DATE

X

REGISTERED PROFESSIONAL ENGINEER NO. EXP. CIVIL STATE OF CALIFORNIA

MONTGOMERY WATSON - CHAUDHARY
750 B Street Suite 1610
San Diego CA 92101-8131

The State of California or its officers or agents shall not be responsible for the accuracy or completeness of electronic copies of this plan sheet.

SCALE:

10 METERS

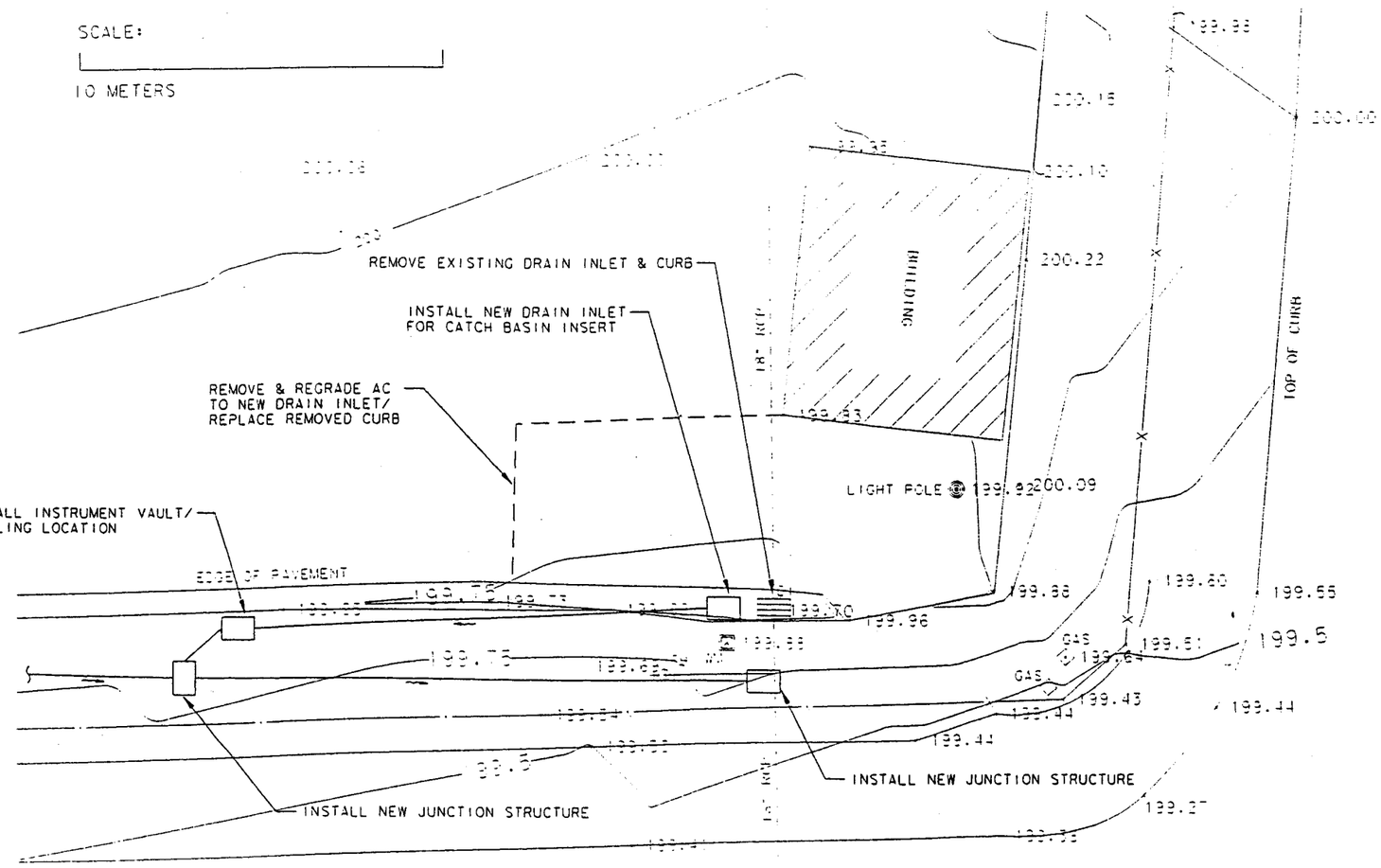

DETAIL B

PRELIMINARY CONCEPT

NO. 6 CATCH BASIN INSERT
ROSEMEAD MAINTANENCE STATION
SHEET 2

MONTGOMERY WATSON - CHAUDHARY
Professional Engineers, Planners, Construction Managers and Surveyors

C&A

STATE OF CALIFORNIA - DEPARTMENT OF TRANSPORTATION
Caltrans

DESIGN OVERSIGHT

CALCULATED/DESIGNED BY
CHECKED BY

DATE 2/26/98 REVISED BY
2/26/98 DATE REVISED

$DATE$ $TIME$ $FILE$

FOR REDUCED PLANS ORIGINAL SCALE IN MILLIMETERS 0 20 40 60 80

USERNAME => $$$$$$USER$$$$$$
DGN FILE => $$$$$$$$$$DGNSPEC$$$$$$$$$$

CU 00000

EA 910202

ALL DIMENSIONS ARE IN METERS UNLESS OTHERWISE SHOWN

Caltrans Metric

DIST	COUNTY	ROUTE	KILOMETER POST TOTAL PROJECT	SHEET NO.	TOTAL SHEETS
X	LA	605.91	X.XX		

REGISTERED CIVIL ENGINEER

PLANS APPROVAL DATE

X

REGISTERED PROFESSIONAL ENGINEER No. Exp. CIVIL STATE OF CALIFORNIA

MONTGOMERY WATSON - CHAUDHARY
750 B Street Suite 1610
San Diego CA 92101-8131

The State of California or its officers or agents shall not be responsible for the accuracy or completeness of electronic copies of this plan sheet.

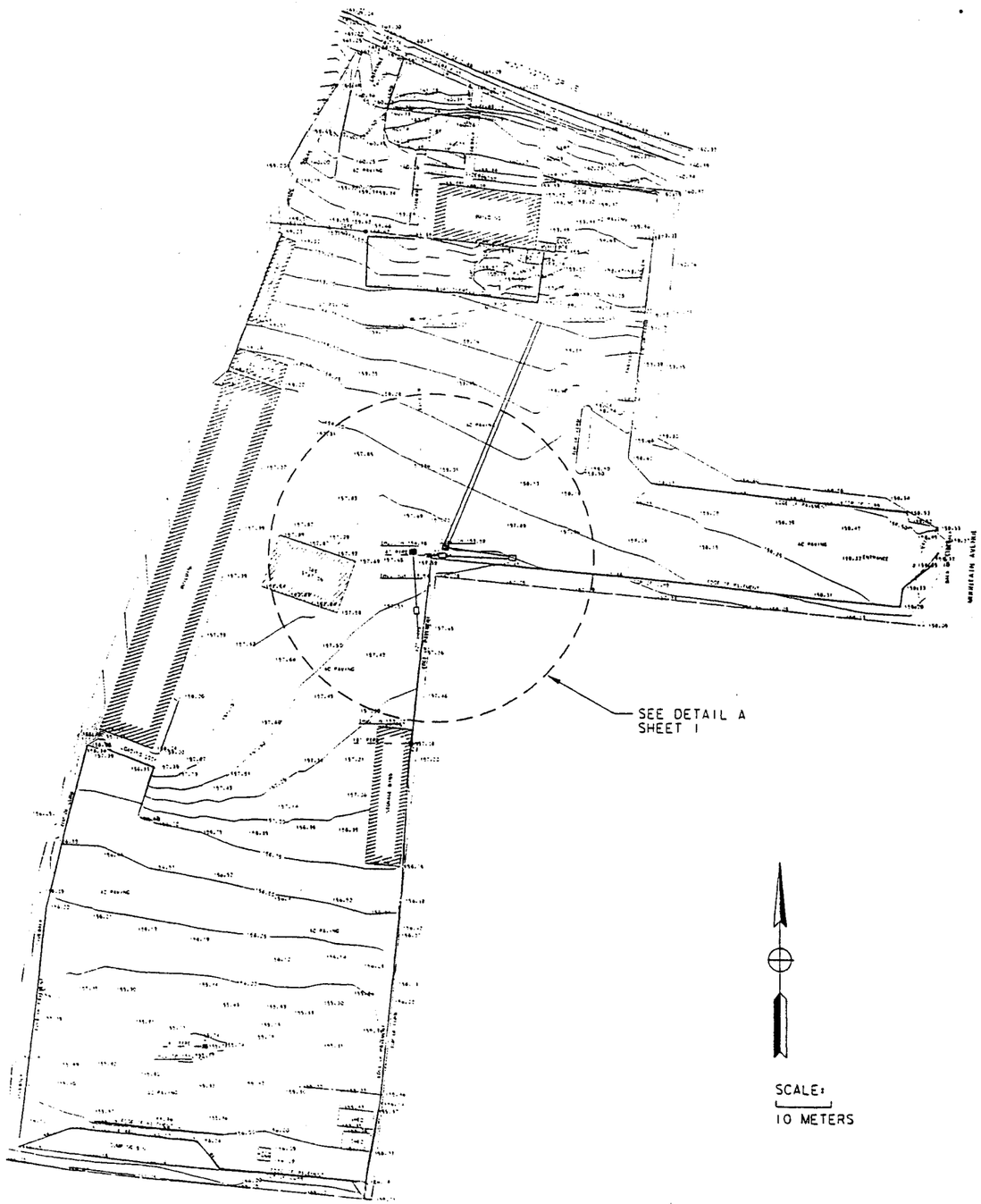

SCALE:
10 METERS

PRELIMINARY CONCEPT

NO. 7 CATCH BASIN INSERT
FOOTHILL MAINTENANCE STATION
SITE PLAN

MONTGOMERY WATSON - CHAUDHARY
Professional Engineers, Planners, Construction Managers and Surveyors

C&A

CALCULATED/ DESIGNED BY	DATE 2/26/98
CHECKED BY	DATE REVISED 2/26/98

DESIGN OVERSIGHT

STATE OF CALIFORNIA - DEPARTMENT OF TRANSPORTATION
Caltrans

$DATE$ $TIME$ $FILE$

FOR REDUCED PLANS ORIGINAL SCALE IN MILLIMETERS 0 20 40 60 80

USERNAME => $$$$$$USER$$$$$
DGN FILE => $$$$$$$$$$DGNSPEC$$$$$$$$$$

CU 00000

EA 910202

ALL DIMENSIONS ARE IN METERS UNLESS OTHERWISE SHOWN

Caltrans Metric

DIST	COUNTY	ROUTE	KILOMETER POST TOTAL PROJECT	SHEET NO.	TOTAL SHEETS
X	LA	605.91	X.XX		

REGISTERED CIVIL ENGINEER

PLANS APPROVAL DATE

X

REGISTERED PROFESSIONAL ENGINEER No. Exp. CIVIL STATE OF CALIFORNIA

MONTGOMERY WATSON - CHAUDHARY
750 B Street Suite 1610
San Diego CA 92101-8131

The State of California or its officers or agents shall not be responsible for the accuracy or completeness of electronic copies of this plan sheet.

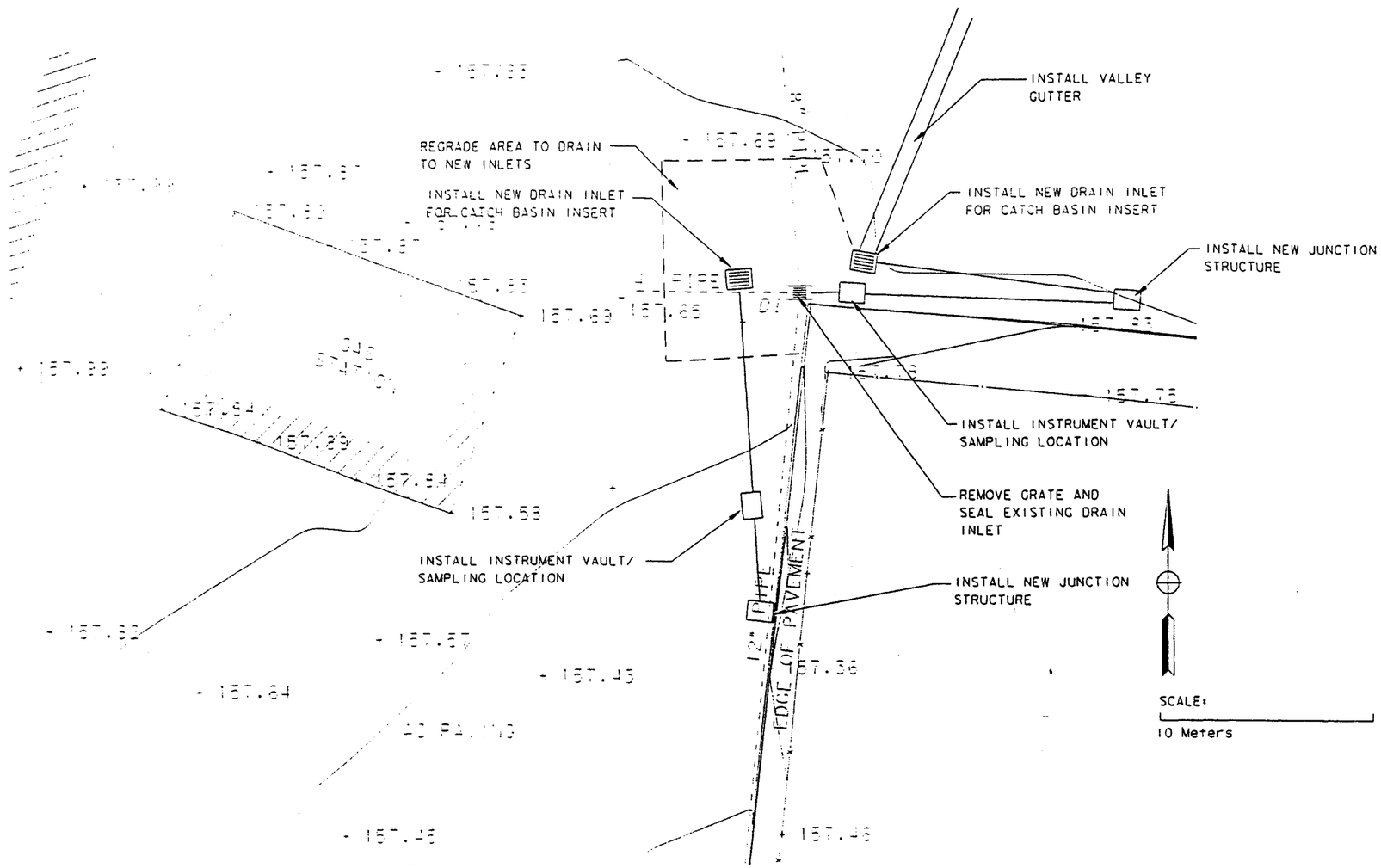

DETAIL A

PRELIMINARY CONCEPT

NO. 7 CATCH BASIN INSERT
FOOTHILL MAINTANENCE STATION
SHEET 1

MONTGOMERY WATSON - CHAUDHARY
Professional Engineers, Planners, Construction Managers and Surveyors

C&A

STATE OF CALIFORNIA - DEPARTMENT OF TRANSPORTATION
Caltrans

DESIGN OVERSIGHT

CALCULATED/ DESIGNED BY | DATE 2/26/98 | REVISED BY
CHECKED BY | 2/26/98 | DATE REVISED

$DATE$ $TIME$ $FILE$

FOR REDUCED PLANS ORIGINAL SCALE IN MILLIMETERS 0 20 40 60 80

USERNAME => $$$$$$USER$$$$$$
DGN FILE => $$$$$$$$$$DGNSPEC$$$$$$$$$$

CU 00000 EA 910202

Project No. 4
District 7

ALL DIMENSIONS ARE IN
METERS UNLESS OTHERWISE SHOWN

Caltrans Metric

DIST	COUNTY	ROUTE	KILOMETER POST TOTAL PROJECT	SHEET NO.	TOTAL SHEETS
X	LA	605,91	X.XX		

REGISTERED CIVIL ENGINEER

PLANS APPROVAL DATE

X

REGISTERED PROFESSIONAL ENGINEER
No.
Exp.
CIVIL
STATE OF CALIFORNIA

BROWN AND CALDWELL
16735 VON KARMAN
IRVINE, CA 92606

The State of California or its officers or agents shall not be responsible for the accuracy or completeness of electronic copies of this plan sheet.

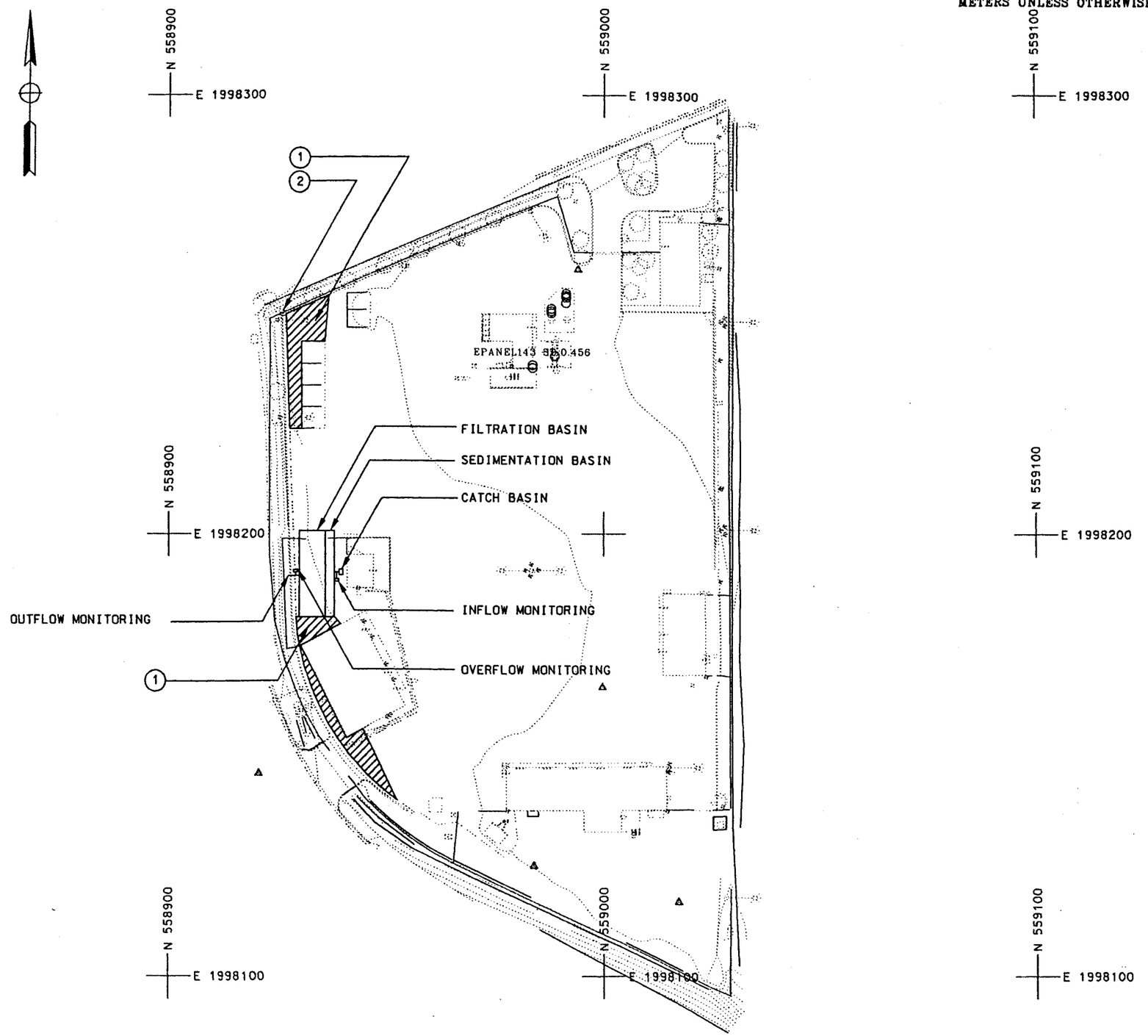

CONSTRUCTION NOTES

1. REGRADE SHADED AREA
2. PLUG EXISTING OUTLET TO STORMDRAIN

EASTERN REGIONAL MAINTENANCE STATION

SCALE 1:1000

DATE	REVISED BY	DATE	REVISED BY
12/97		12/97	

CALCULATED/DESIGNED BY

CHECKED BY

DESIGN OVERSIGHT

STATE OF CALIFORNIA - DEPARTMENT OF TRANSPORTATION

Caltrans

$DATE$ $TIME$ $FILE$

DIST	COUNTY	ROUTE	KILOMETER POST TOTAL PROJECT	SHEET NO.	TOTAL SHEETS
X	LA	605,91	X.XX		

REGISTERED CIVIL ENGINEER

PLANS APPROVAL DATE

X

REGISTERED PROFESSIONAL ENGINEER
No.
Exp.
CIVIL
STATE OF CALIFORNIA

BROWN AND CALDWELL
16735 VON KARMAN
IRVINE, CA 92606

The State of California or its officers or agents shall not be responsible for the accuracy or completeness of electronic copies of this plan sheet.

Caltrans Metric

ALL DIMENSIONS ARE IN METERS UNLESS OTHERWISE SHOWN

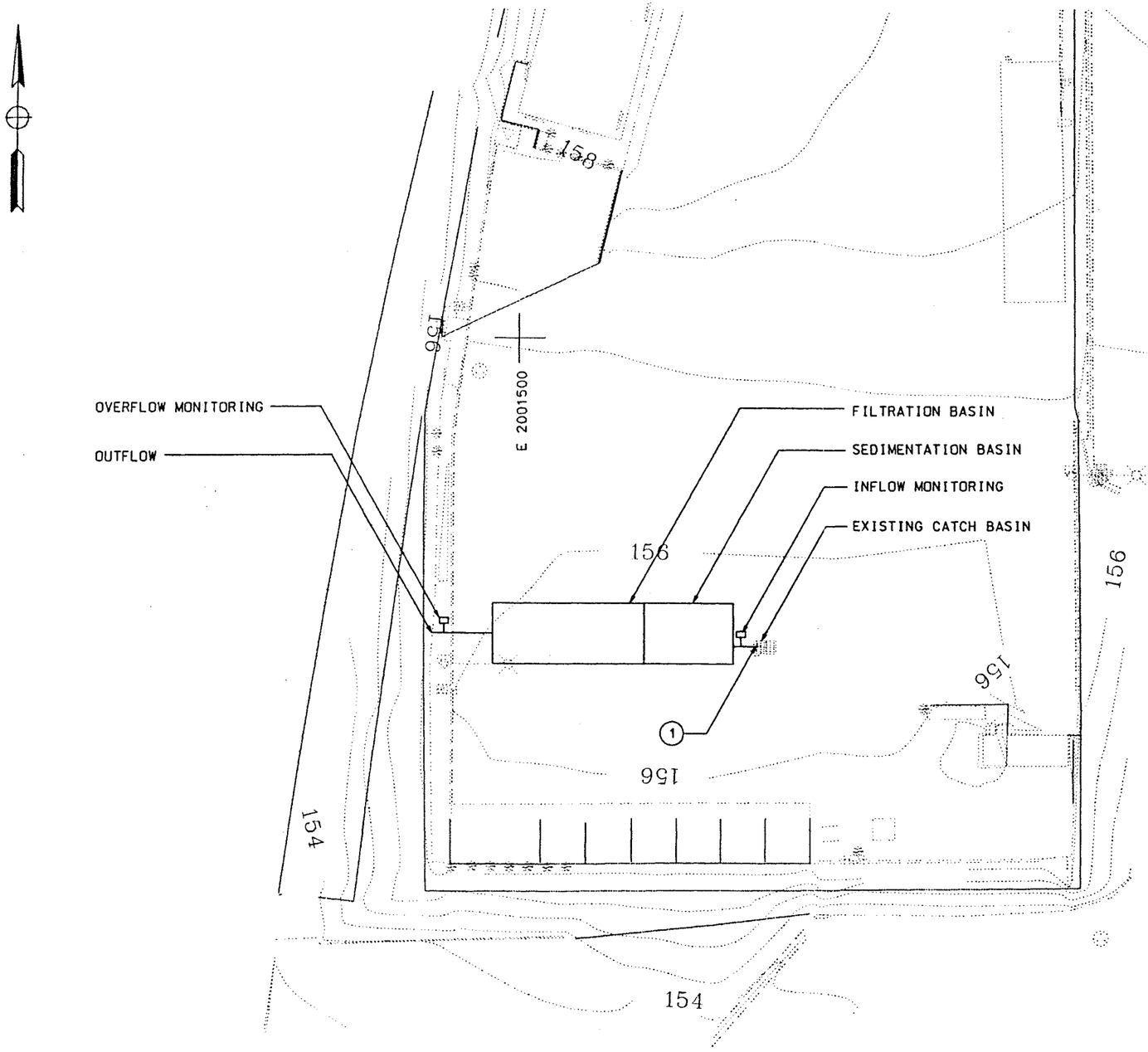

CONSTRUCTION NOTES

1. CONNECT TO EXISTING CATCH BASIN

FOOTHILL MAINTENANCE STATION

SCALE 1:500

DATE	REVISED BY	DATE REVISED
2/97		2/97

CALCULATED/DESIGNED BY

CHECKED BY

DESIGN OVERSIGHT

STATE OF CALIFORNIA - DEPARTMENT OF TRANSPORTATION

Caltrans

$DATE$ $TIME$ $FILE$

ALL DIMENSIONS ARE IN METERS UNLESS OTHERWISE SHOWN

Caltrans Metric

DIST	COUNTY	ROUTE	KILOMETER POST TOTAL PROJECT	SHEET NO.	TOTAL SHEETS
X	LA	605,91	X.XX		

REGISTERED CIVIL ENGINEER

PLANS APPROVAL DATE

X

REGISTERED PROFESSIONAL ENGINEER No. Exp. CIVIL STATE OF CALIFORNIA

BROWN AND CALDWELL
18735 VON KARMAN
IRVINE, CA 92606

The State of California or its officers or agents shall not be responsible for the accuracy or completeness of electronic copies of this plan sheet.

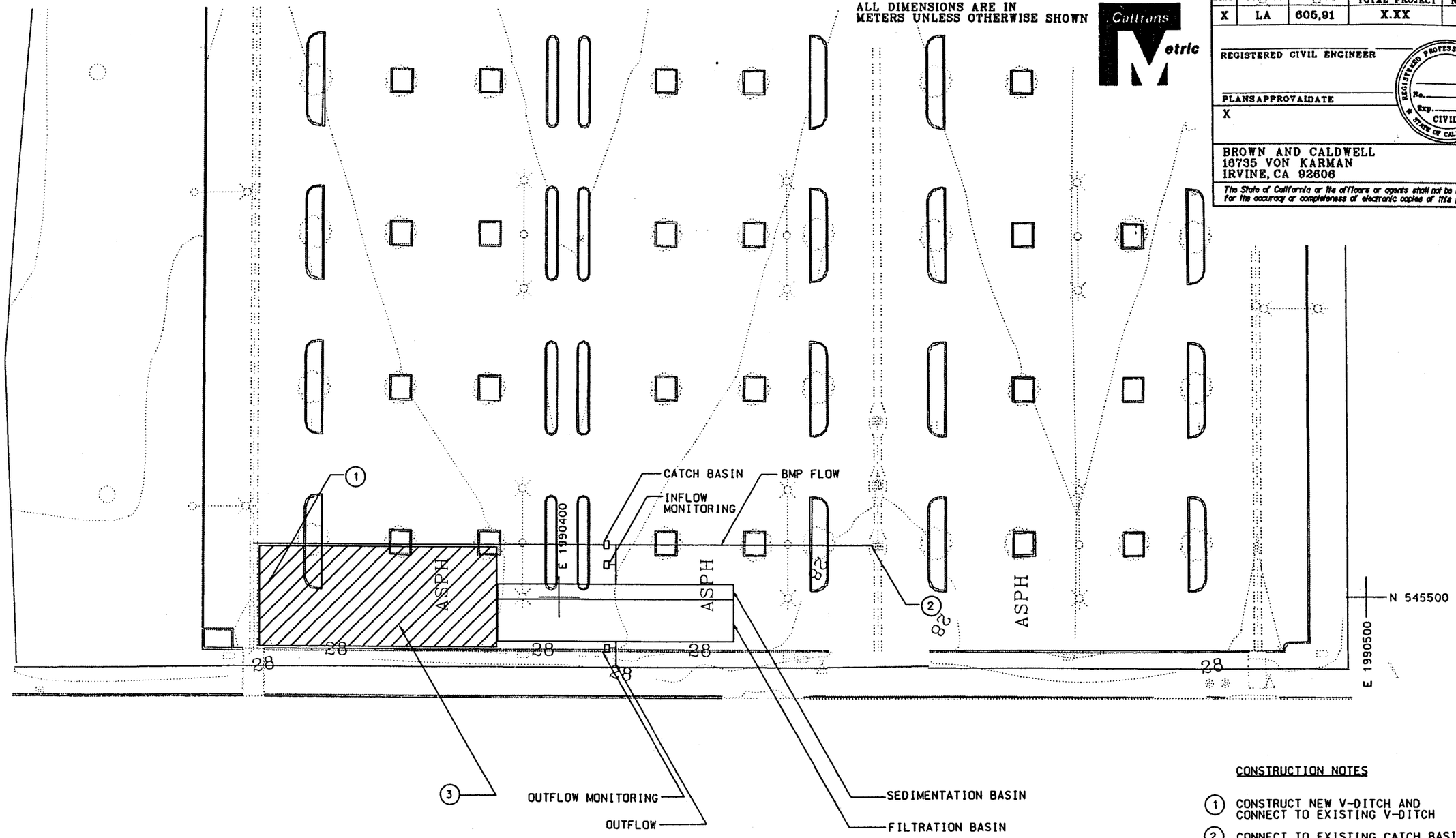

CONSTRUCTION NOTES

1. CONSTRUCT NEW V-DITCH AND CONNECT TO EXISTING V-DITCH
2. CONNECT TO EXISTING CATCH BASIN
3. REGRADE SHADED AREA

TERMINATION PARK AND RIDE

SCALE 1:500

DATE	REVISED BY	DATE REVISED
12/97		12/97

CALCULATED/DESIGNED BY

CHECKED BY

DESIGN OVERSIGHT

DATES TIMES FILES

Caltrans

ALL DIMENSIONS ARE IN METERS UNLESS OTHERWISE SHOWN

Caltrans Metric

DIST	COUNTY	ROUTE	KILOMETER POST TOTAL PROJECT	SHEET NO.	TOTAL SHEETS
X	LA	605,91	X.XX		

REGISTERED CIVIL ENGINEER

PLANS APPROVAL DATE

X

REGISTERED PROFESSIONAL ENGINEER No. Exp. CIVIL STATE OF CALIFORNIA

BROWN AND CALDWELL
16735 VON KARMAN
IRVINE, CA 92606

The State of California or its officers or agents shall not be responsible for the accuracy or completeness of electronic copies of this plan sheet.

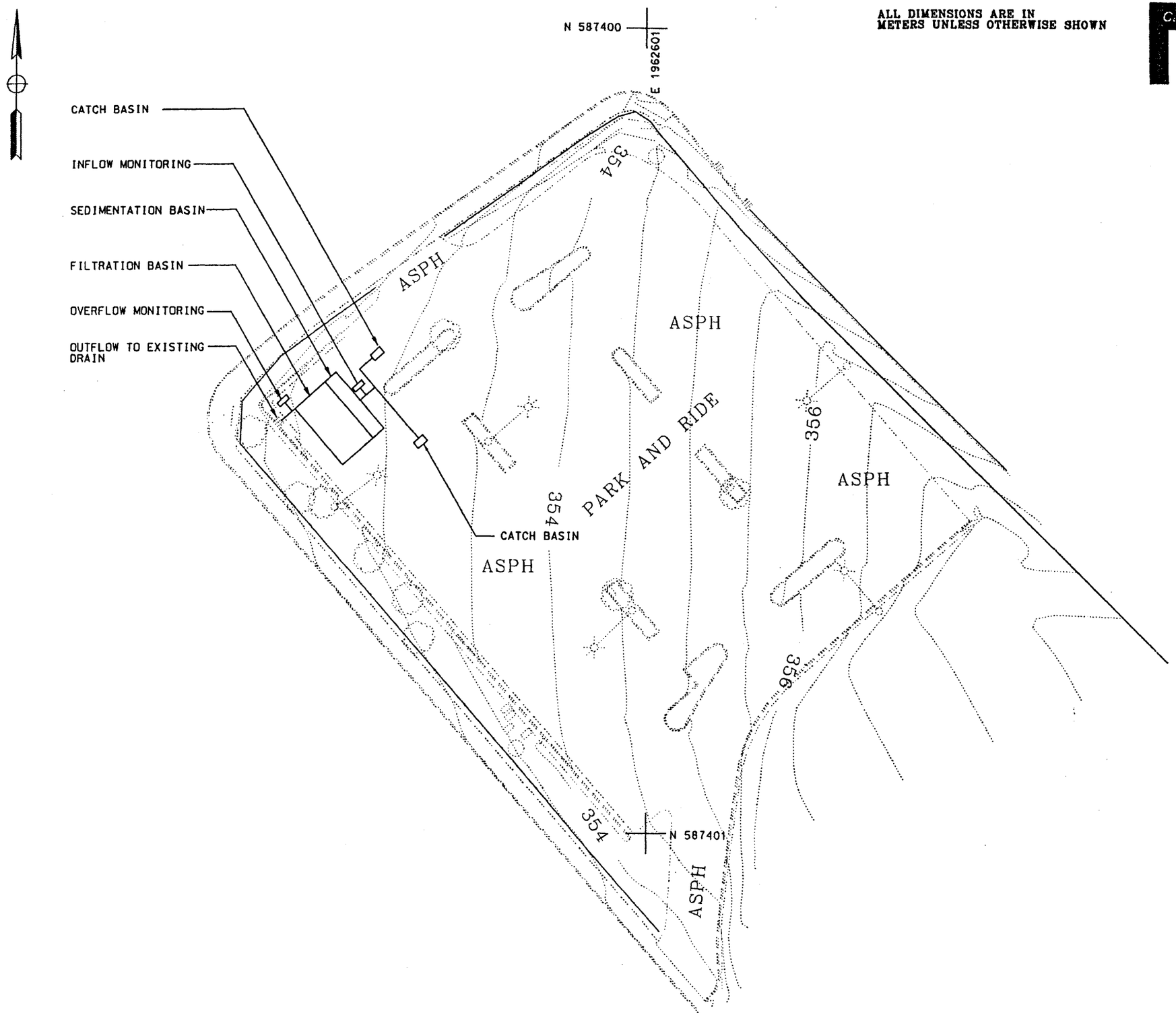

PAXTON PARK AND RIDE

SCALE 1:1000

DATE	REVISED BY	DATE	REVISED BY
2/97		2/97	

CALCULATED/DESIGNED BY

CHECKED BY

DESIGN OVERSIGHT

STATE OF CALIFORNIA - DEPARTMENT OF TRANSPORTATION

Caltrans

$DATE$ $TIME$ $FILE$

ALL DIMENSIONS ARE IN METERS UNLESS OTHERWISE SHOWN

Caltrans Metric

DIST	COUNTY	ROUTE	KILOMETER POST TOTAL PROJECT	SHEET NO.	TOTAL SHEETS
X	LA	605,91	X.XX		

REGISTERED CIVIL ENGINEER

PLANS APPROVAL DATE

X

REGISTERED PROFESSIONAL ENGINEER No. Exp. CIVIL STATE OF CALIFORNIA

BROWN AND CALDWELL
16735 VON KARMAN
IRVINE, CA 92606

The State of California or its officers or agents shall not be responsible for the accuracy or completeness of electronic copies of this plan sheet.

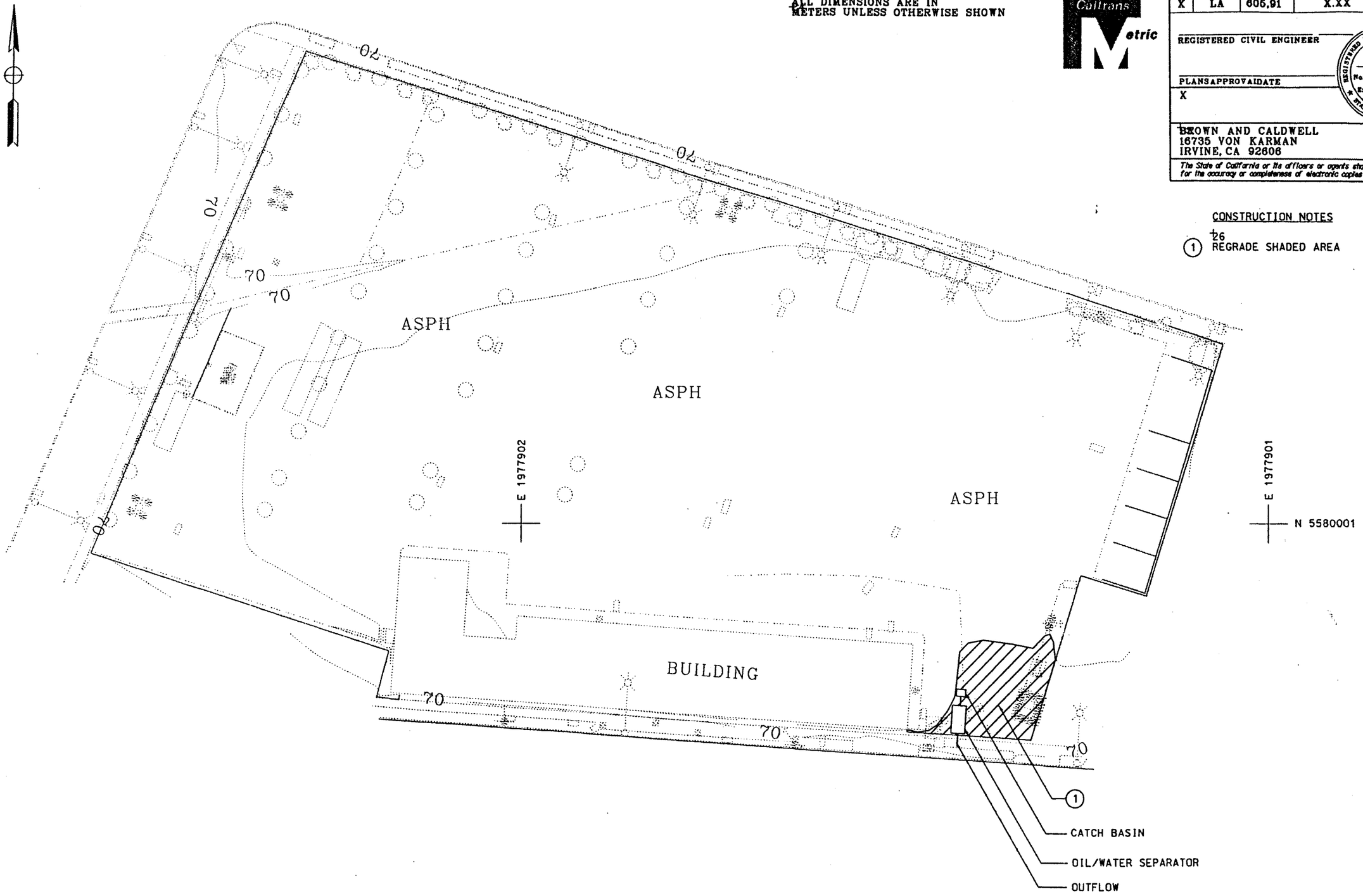

CONSTRUCTION NOTES

1 REGRADE SHADED AREA

ALAMEDA MAINTENANCE STATION

SCALE 1:500

DATE	REVISED BY
2/97	
2/97	DATE REVISED

CALCULATED/DESIGNED BY

CHECKED BY

DESIGN OVERSIGHT

STATE OF CALIFORNIA - DEPARTMENT OF TRANSPORTATION

Caltrans

DATES STIMES SFILES

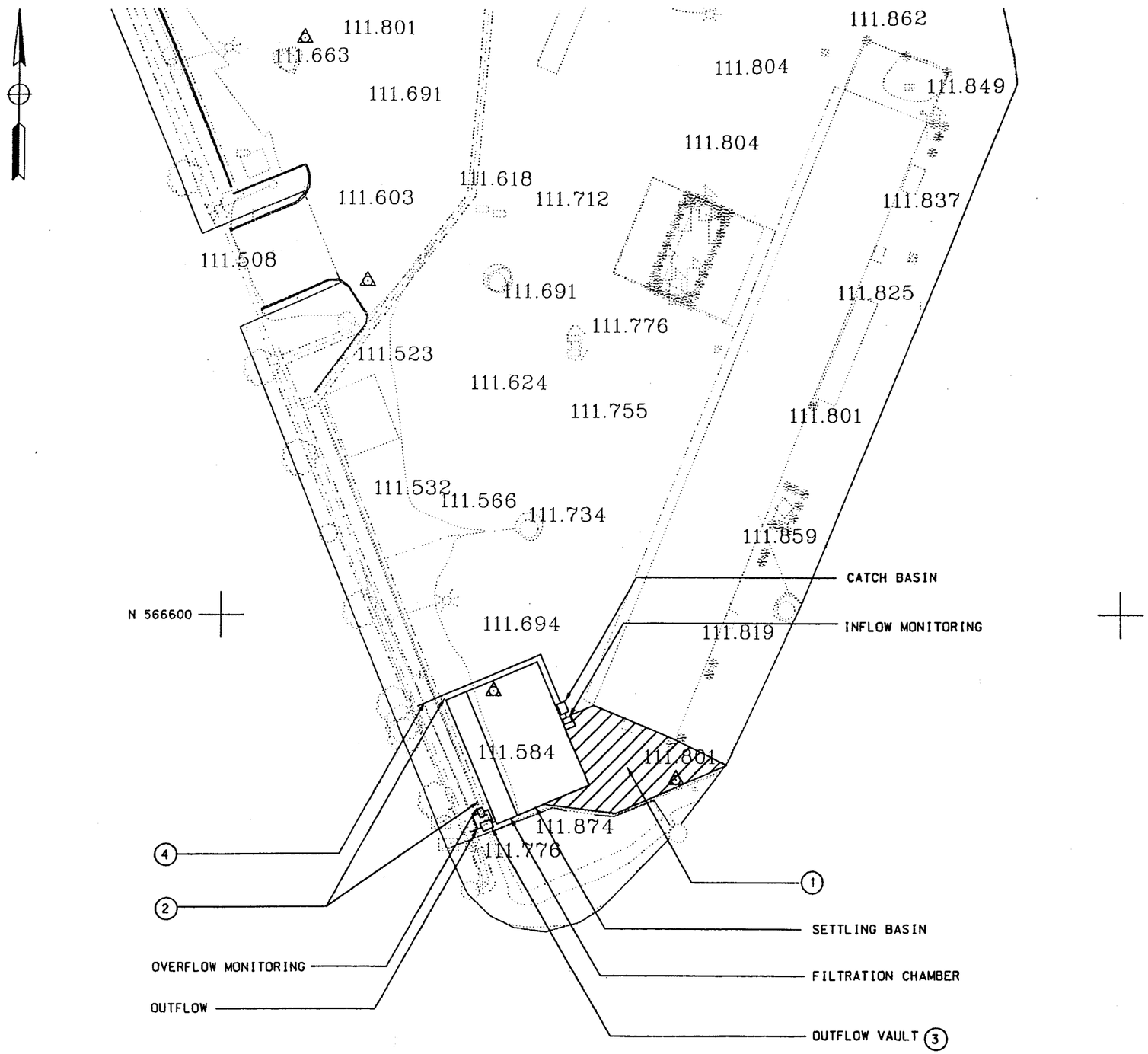

DIST	COUNTY	ROUTE	KILOMETER POST TOTAL PROJECT	SHEET NO.	TOTAL SHEETS
X	LA	605,91	X.XX		

REGISTERED CIVIL ENGINEER

PLANS APPROVAL DATE

X

REGISTERED PROFESSIONAL ENGINEER
No.
Exp.
CIVIL
STATE OF CALIFORNIA

BROWN AND CALDWELL
16735 VON KARMAN
IRVINE, CA 92606

The State of California or its officers or agents shall not be responsible for the accuracy or completeness of electronic copies of this plan sheet.

Caltrans Metric

CONSTRUCTION NOTES

1. REGRADE SHADED AREA
2. REMOVE CURB AS NECESSARY
3. OUT FLOW VAULT SHALL HOUSE PUMP AND FLOW METER
4. INSTALL 8 INCH D.I.P. AND CONNECT TO NEW CATCH BASIN

METRO MAINTENANCE STATION

SCALE: 1:500

DATE	REVISED BY	DATE	REVISED BY
12/97		12/97	

CALCULATED/DESIGNED BY

CHECKED BY

DESIGN OVERSIGHT

DATES STIMES SFILES

STATE OF CALIFORNIA - DEPARTMENT OF TRANSPORTATION

Caltrans

DIST	COUNTY	ROUTE	KILOMETER POST TOTAL PROJECT	SHEET NO.	TOTAL SHEETS
X	LA	605,91	X.XX		

REGISTERED CIVIL ENGINEER

PLANS APPROVAL DATE

X

REGISTERED PROFESSIONAL ENGINEER — No. — Exp. — CIVIL — STATE OF CALIFORNIA

BROWN AND CALDWELL
16735 VON KARMAN
IRVINE, CA 92606

The State of California or its officers or agents shall not be responsible for the accuracy or completeness of electronic copies of this plan sheet.

Caltrans Metric

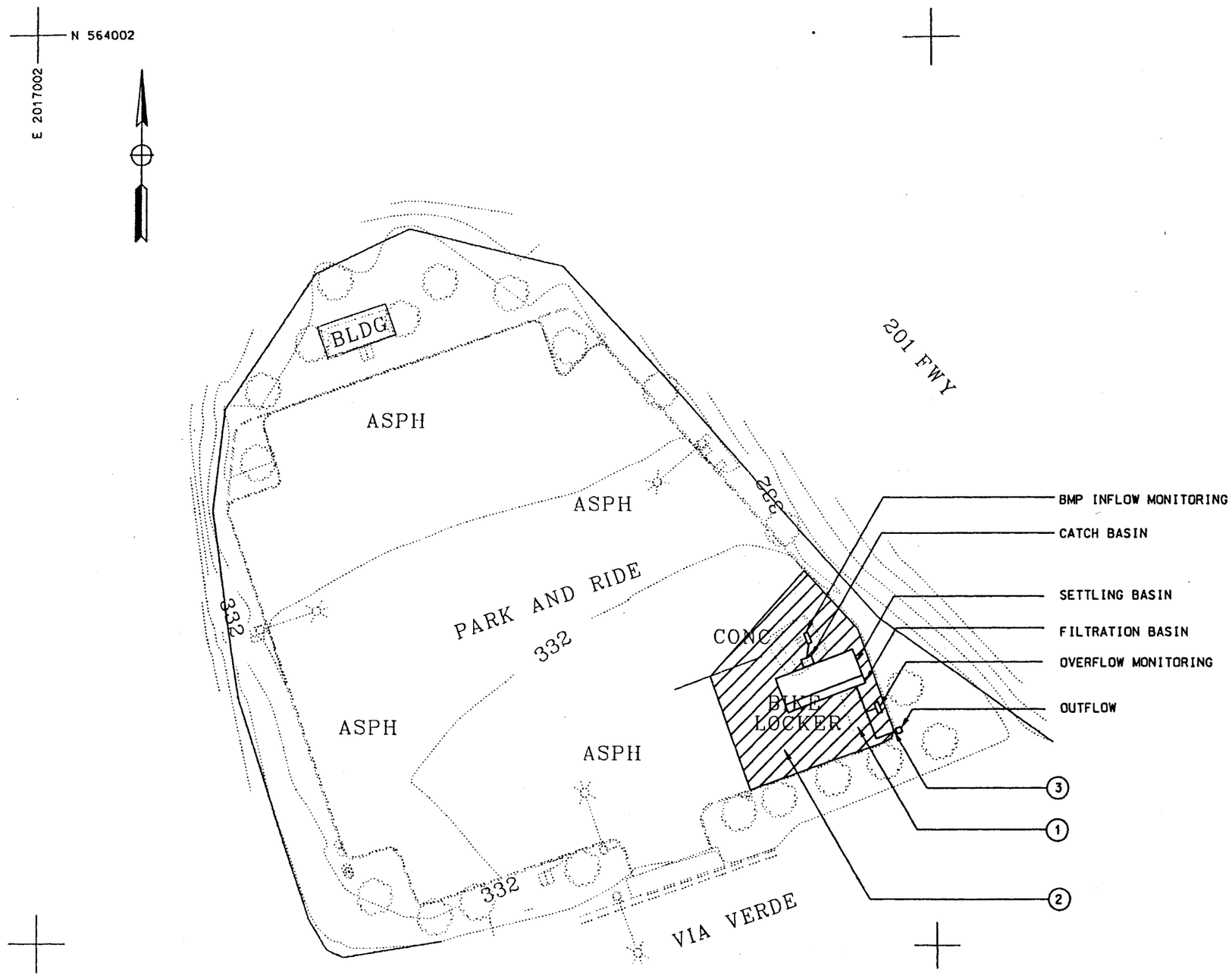

CONSTRUCTION NOTES

1. REMOVE AND RELOCATE EXISTING BIKE RACK
2. REGRADE SHADED AREA
3. CONNECT TO EXISTING STORMDRAIN

VIA VERDE PARK AND RIDE

SCALE 1:500

DATE	REVISED BY	DATE REVISED
2/97		2/97

CALCULATED/DESIGNED BY — CHECKED BY

DESIGN OVERSIGHT

STATE OF CALIFORNIA - DEPARTMENT OF TRANSPORTATION

Caltrans

$DATES $TIMES $FILES

Procurement Projects
District 11

INDEX OF SHEETS

DIST	COUNTY	ROUTE	KILOMETER POST TOTAL PROJECT	SHEET No	TOTAL SHEETS
11	SD	5, 78	Var	1	-

STATE OF CALIFORNIA

DEPARTMENT OF TRANSPORTATION

PROJECT PLANS FOR CONSTRUCTION ON

STATE HIGHWAY

IN SAN DIEGO COUNTY AT VARIOUS LOCATIONS

To be supplemented by Standard Plans dated July, 1997

The State of California or its officers or agents shall not be responsible for the accuracy or completeness of electronic copies of this plan sheet.

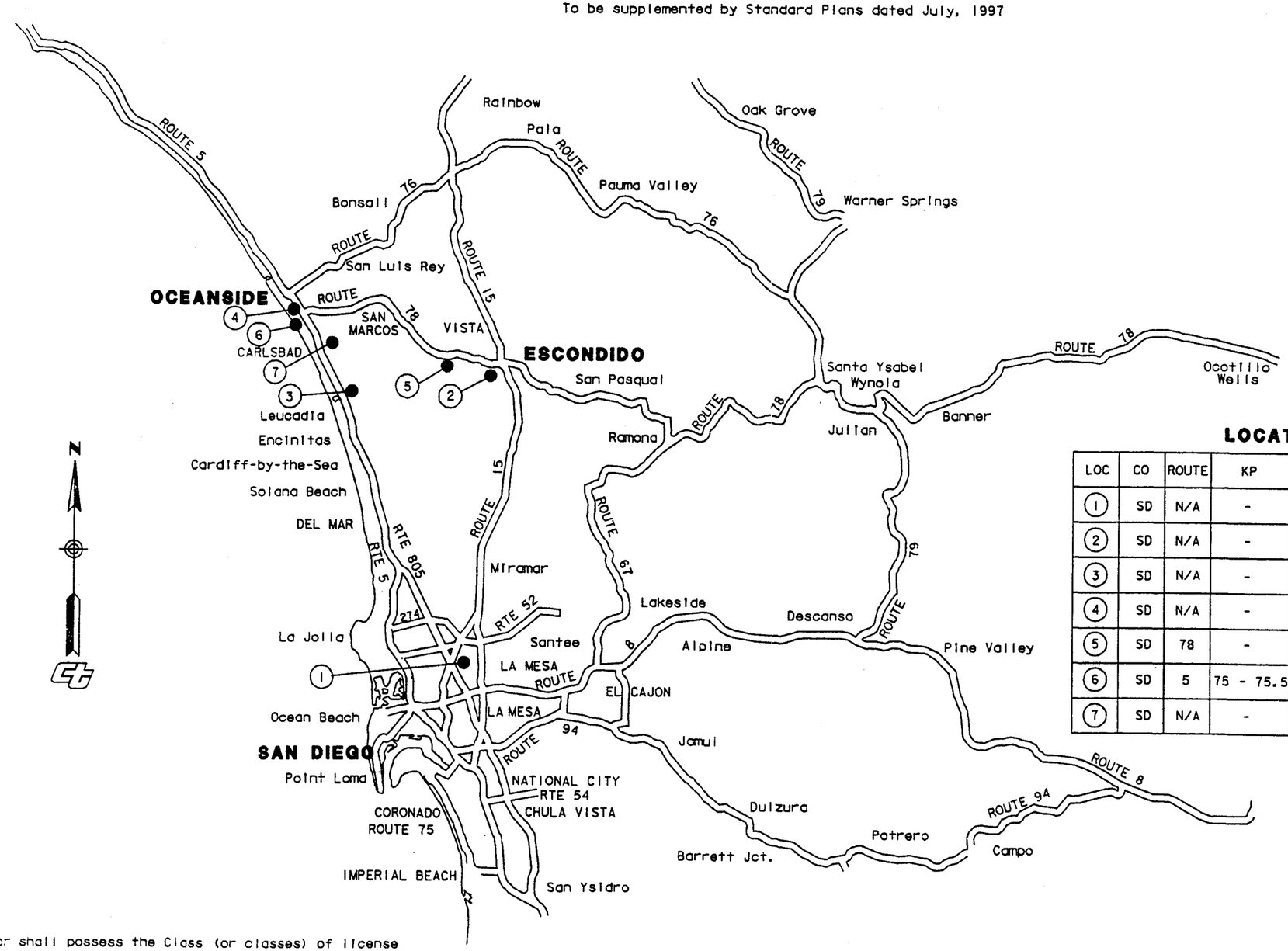

LOCATION OF CONSTRUCTION

LOC	CO	ROUTE	KP	PM	DESCRIPTION
1	SD	N/A	-	-	KEARY MESA MAINTENANCE STATION
2	SD	N/A	-	-	ESCONDIDO MAINTENANCE STATION
3	SD	N/A	-	-	LA COSTA AVENUE PARK AND RIDE
4	SD	N/A	-	-	SR-78 / I-5 PARK AND RIDE
5	SD	78	-	-	SR-78 WEST OF MELROSE DRIVE INTERCHANGE
6	SD	5	75 - 75.5	46 - 46.9	I-5 NORTH OF PALOMAR AIRPORT ROAD INTERCHANGE
7	SD	N/A	-	-	CARLSBAD MAINTENANCE STATION

Project Engineer Date
Registered Civil Engineer

Plans Approval Date

REGISTERED PROFESSIONAL ENGINEER No. Exp. CIVIL STATE OF CALIFORNIA

The Contractor shall possess the Class (or classes) of license as specified in the ''Notice to Contractors''.

Contract No.

PROJECT ENGINEER | DATE | PROJECT MANAGER | DATE

LAST REVISION 00-00-00 TIME PLOTTED -> $$$$$$SYTIME$$$$$$

DIST.	COUNTY	ROUTE	KILOMETER POST TOTAL PROJECT	SHEET NO.	TOTAL SHEETS

The State of California or its officers or agents shall not be responsible for the accuracy or completeness of electronic copies of this plan sheet.

Metric

To accompany plans dated _____

GENERAL ROAD WORK

MISCELLANEOUS

- ■ A10A Abbreviations
- ■ A10B Symbols
- □ A20A Pavement Markers and Traffic Lines, Typical Details
- □ A20B Pavement Markers and Traffic Lines, Typical Details
- □ A20C Pavement Markers and Traffic Lines, Typical Details
- □ A20D Pavement Markers and Traffic Lines, Typical Details
- □ A24A Pavement Markings- Arrows
- □ A24B Pavement Markings- Arrows
- □ A24C Pavement Markings- Symbols and Numerals
- □ A24D Pavement Markings- Words
- □ A24E Pavement Markings- Words and Crosswalks
- □ A35A Portland Cement Concrete Paving Details
- □ A40 Rumble Strip Details
- ■ A62A Excavation and Backfill- Miscellaneous Details
- □ A62B Limits of Payment for Excavation and Backfill Bridge- Surcharge and Wall
- □ A62C Limits of Payment for Excavation and Backfill- Bridge
- □ A62D Excavation and Backfill- Concrete Pipe Culverts
- □ A62E Excavation and Backfill- Cast-in-Place Reinforced Concrete Box and Arch Culverts
- ■ A62F Excavation and Backfill- Metal and Plastic Culverts
- □ A73A Object Markers
- □ A73B Markers
- □ A73C Delineators, Channelizers and Barricades
- □ A74 Survey Monuments
- □ A75A Concrete Barrier Type 50
- □ A75B Concrete Barrier Type 50E
- □ A75D Concrete Headlight Glare Screen
- □ RSP A76A CONCRETE BARRIER TYPE 60
- □ A76B Concrete Barrier Type 60
- □ A76C Concrete Barrier Type 60E
- □ A76D Concrete Barrier Type 60G
- □ A76E Concrete Barrier Type 60G
- □ A76F Concrete Barrier Type 60GE
- □ RSP A76G CONCRETE BARRIER TYPE 60S
- □ A76H Concrete Barrier Type 60S
- □ A76I Concrete Barrier Type 60SE
- □ A77A Metal Beam Guard Railing
- □ A77B Metal Beam Guard Railing- Standard Hardware
- □ RSP A77C METAL BEAM GUARD RAILING - POST AND BLOCKS
- □ A77D Guard Railing Flares
- □ A77E Guard Railing Flares
- □ A77F Metal Beam Guard Railing- Miscellaneous Details
- □ A77G Guard Railing End Anchors (Breakaway)
- □ A77GA Anchor Assembly (Breakaway, Type M)-Hardware and Post Details
- □ A77H Guard Railing End Anchors- Breakaway Hardware
- □ A77I Barrier and Guard Railing End Anchors
- □ A77J Guard Railing Connections to Bridge Railings, Retaining Walls and Abutments
- □ A77K Guard Railing Connections to Bridge Sidewalks and Curbs
- □ A78A Thrie Beam Barrier
- □ A78B Thrie Beam Barrier
- □ A78C Thrie Beam Barrier- Standard Hardware
- □ A78D Thrie Beam Barrier- Miscellaneous Details
- □ A78E Thrie Beam Barrier- End Anchors
- □ A78F Thrie Beam Barrier Connections to Bridge Railing
- □ A78G Thrie Beam Barrier Connections to Bridge Curbs, Retaining Walls and Abutments
- □ A78H Thrie Beam Barrier Connections to Concrete Barrier Type 50
- □ A78I Thrie Beam Barrier Connections to Concrete Barrier Type 60
- □ A81 Crash Cushion, Sand Filled
- □ A83 Portable Scale Pad and Approach Slab Details
- ■ A85 Chain Link Fence
- □ A86 Barbed Wire and Wire Mesh Fences
- ■ A87 Curbs, Dikes and Driveways
- □ A88 Curb Ramp Details
- □ A90 Accessible Parking

CRIB WALLS

- □ C7A Reinforced Concrete Crib Wall- Battered Wall- Types A,B and C
- □ C7B Reinforced Concrete Crib Wall- Battered Wall- Types D,E and F
- □ C7C Reinforced Concrete Crib Wall- Vertical Wall- Types A,B and C
- □ C7D Reinforced Concrete Crib Wall- Vertical Wall- Types D,E and F
- □ RSP C7E REINFORCED CONCRETE CRIB WALL- TYPES A,B,C,D,E AND F-HEADER AND STRECHER DETAILS
- □ RSP C7F DESIGN DATA FOR REINFORCED CONCRETE CRIB WALL FOUNDATION PRESSURE- BATTERED WALL
- □ RSP C7G REINFORCED CONCRETE CRIB WALL FOUNDATION PRESSURE- VERTICAL WALL
- □ C8A Steel Crib Wall- Construction Details
- □ C8B Steel Crib Wall- Design Data
- □ RSP C8C STEEL CRIB WALL- DESIGN DATA
- □ C9A Timber Crib Wall- Types A,B,C and D
- □ RSP C9B TIMBER CRIB WALL- TYPES A,B,C AND D-DESIGN DATA

DRAINAGE

- □ D72 Drainage Inlets
- ■ D73 Drainage Inlets
- ■ D74A Drainage Inlets
- ■ D74B Drainage Inlets
- ■ D74C Drainage Inlet Details
- D75 IS DELETED AND REPLACED WITH NSP D75A, NSP D75B AND NSP D75C)
- ■ RSP D77A Grate Details
- □ D77B Bicycle Proof Grate Details
- ■ D77C Alternative Hinged Cover for Type OL and OS Inlets and Trash Rack for Type OCP Inlet
- ■ D78 Gutter Depressions
- □ D79 Precast Reinforced Concrete Pipe- Direct Design Method
- □ D80 Cast-in-Place Reinforced Concrete Single Box Culvert
- □ D81 Cast-in-Place Reinforced Concrete Double Box Culvert
- □ D82 Cast-in-Place Reinforced Concrete Box Culvert Miscellaneous Details
- □ D84 Box Culvert Wingwalls- Types A,B and C
- □ RSP D85 BOX CULVERT WINGWALLS- TYPES D AND E
- □ D86A Box Culvert Warped Wingwalls
- □ D86B Pipe Culvert Headwalls, Endwalls and Warped Wingwalls
- □ D86C Arch Culvert Headwalls, Endwalls and Warped Wingwalls
- ■ D87A Overside Drains
- □ D87B Overside Drains
- □ D87C Underdrains
- ■ D88 Construction Loads on Culverts
- □ D88A Strut Details for Structural Steel Plate Pipes, Arches, and Vehicular Undercrossings
- □ D89 Pipe Headwalls
- □ D90 Pipe Culvert Headwalls, Endwalls and Wingwalls-Types A,B and C
- □ D93A Pipe Riser Connections
- □ D93B Drainage Inlet Riser Connections
- □ D93C Pipe Riser with Debris Rack Cage
- ■ D94A Metal and Plastic Flared End Sections
- □ D94B Concrete Flared End Sections
- □ D95 Concrete Arch Culverts
- ■ D97A Corrugated Metal Pipe Coupling Details No. 1- Annular Coupling Band Bar and Strap and Angle Connectors
- ■ D97B Corrugated Metal Pipe Coupling Details No. 2- Hat Band Coupler and Flange Details
- □ D97C Corrugated Metal Pipe Coupling Details No. 3- Helical and Universal Couplers
- ■ D97D Corrugated Metal Pipe Coupling Details No. 4- Hugger Coupling Bands
- ■ D97E Corrugated Metal Pipe Coupling Details No. 5- Standard Joint
- ■ D97F Corrugated Metal Pipe Coupling Details No. 6- Positive Joint
- ■ D97G Corrugated Metal Pipe Coupling Details No. 7- Positive Joints and Downdrains
- ■ D97H Reinforced Concrete Pipe or Non-Reinforced Concrete Pipe Standard and Positive Joints
- □ D98A Slotted Corrugated Steel Pipe Drain Details
- □ D98B Slotted Corrugated Steel Pipe Drain Details
- □ D99A Structural Section Drainage System Details
- □ D99B Edge Drain Outlet and Vent Details
- □ D99C Edge Drain Cleanout and Vent Details
- □ D99D Cross Drain Interceptor Details

HIGHWAY PLANTING

- □ H1 Planting and Irrigation- Abbreviations
- □ RSP H2 PLANTING AND IRRIGATION- SYMBOLS
- □ H3 Planting and Irrigation- Details
- □ H4 Planting and Irrigation- Details
- □ H5 Planting and Irrigation- Details
- □ H6 Planting and Irrigation- Details
- □ H7 Planting and Irrigation- Details
- □ H8 Planting and Irrigation- Details

TEMPORARY FACILITIES

- ■ T1 Temporary Crash Cushion, Sand Filled
- ■ T2 Temporary Crash Cushion, Sand Filled
- ■ T3 Temporary Railing (Type K)
- □ T4 Temporary Traffic Screen
- □ T5 Temporary Terminal Section (Type K)
- □ T7 Construction Project Funding Identification Signs
- □ T10 Traffic Control System for Lane Closure on Freeways and Expressways
- □ T10A Traffic Control System for Lane and Complete Closures on Freeways and Expressways
- □ T11 Traffic Control System for Lane Closure on Multilane Conventional Highways
- □ T12 Traffic Control System for Lane Closure on Multilane Conventional Highways
- □ T13 Traffic Control System for Lane Closure on Two Lane Conventional Highways
- □ T14 Traffic Control System for Ramp Closures
- □ T15 Traffic Control System for Moving Lane Closure on Multilane Highways
- □ T16 Traffic Control System for Moving Lane Closure on Multilane Highways
- □ T17 Traffic Control System for Moving Lane Closure on Two Lane Highways

BRIDGE

- □ B0-1 Bridge Details
- □ B0-3 Bridge Details
- □ B0-5 Bridge Details
- □ B0-13 Bridge Details
- □ B2-3 400 mm Cast-in-Drilled-Hole Concrete Pile
- □ B2-5 Pile Details- Class 400 and Class 625
- □ B2-6 Pile Details- Class 400C and Class 625C
- □ B2-8 Pile Details- Class 900 and Class 900C
- □ B2-9 Load Test Pile Details (1)
- □ B2-10 Load Test Pile Details (2)
- □ B2-11 Load Test Pile Details (3)
- ■ RSP B3-1 RETAINING WALL TYPE 1- H=1200 THROUGH 9100 mm
- □ B3-2 Retaining Wall Type 1- H=9700 Through 10 900 mm
- □ RSP B3-3 RETAINING WALL- TYPE 1A
- □ B3-4 Retaining Wall- Type 2
- □ B3-5 Counterfort Retaining Wall- Type 3
- □ B3-6 Counterfort Retaining Wall- Type 4
- □ RSP B3-7 RETAINING WALL- TYPE 5
- □ RSP B3-8 RETAINING WALL DETAILS No. 1
- □ B3-9 Retaining Wall Details No. 2
- □ B3-11 Retaining Wall Type 6- 1829 mm Maximum
- □ B6-1 T-Beam Details
- □ B6-10 Utility Openings, T-Beam
- □ B6-21 Joint Seals (Maximum Movement Rating = 50 mm)
- □ B7-1 Box Girder Details
- □ B7-5 Deck Drains
- □ B7-6 Deck Drains- Type D-1 and D-2
- □ B7-10 Utility Opening- Box Girder
- □ B7-11 Utility Details
- □ B8-5 Cast-in-Place Prestressed Girder Details
- □ B11-7 Chain Link Railing
- □ B11-47 Cable Railing
- □ B11-51 Tubular Hand Railing
- □ B11-52 Chain Link Railing Type 7
- □ B11-53 Concrete Barrier Type 25
- □ B11-54 Concrete Barrier Type 26

SHEET 1 OF 2

STANDARD PLANS LIST

(July, 1997 Edition)

REVISED DECEMBER 4, 1997

DATE PLOTTED => ◆DATE
TIME PLOTTED => ◆TIME

DIST.	COUNTY	ROUTE	KILOMETER POST TOTAL PROJECT	SHEET NO.	TOTAL SHEETS

The State of California or its officers or agents shall not be responsible for the accuracy or completeness of electronic copies of this plan shee

Metric

To accompany plans dated _____

- ☐ BI3-1 Slope Protection Details
- ☐ BI4-1 Structural Steel Plate Vehicular Undercrossing
- ☐ BI4-3 Communication and Sprinkler Control Conduit (Conduit less than size 103)
- ☐ BI4-4 Water Supply Line (Bridge) (Pipe less than NPS 4)
- ☐ BI4-5 Water Supply Line (Details) (Pipe less than NPS 4)

ROADSIDE SIGNS

- ☐ RS1 Roadside Signs, Typical Installation Details No. 1
- ☐ RS2 Roadside Signs, Wood Post, Typical Installation Details No. 2
- ☐ RS3 Roadside Signs, Laminated Wood Box Post, Typical Installation Details No. 3
- ☐ RS4 Roadside Signs, Typical Installation Details No. 4

OVERHEAD SIGNS

OVERHEAD SIGNS-TRUSS

- ☐ S1 Overhead Signs- Truss, Instructions and Examples
- ☐ S2 Overhead Signs- Truss, Single Post Type, Post Types II thru VII
- ☐ S3 Overhead Signs- Truss, Two Post Type, Post Types I-S thru VII-S
- ☐ RSP S4 OVERHEAD SIGNS- TRUSS, SINGLE POST TYPE, STRUCTURAL FRAME MEMBERS
- ☐ S5 Overhead Signs- Truss, Two Post Type, Structural Frame Members
- ☐ S6 Overhead Signs- Truss, Structural Frame Details
- ☐ S7 Overhead Signs- Truss, Frame Juncture Details
- ☐ S8A Overhead Signs- Steel Frame Removable Sign Panel Frames
- ☐ S8B Overhead Signs- Removable Sign Panel Frames, Overhead Formed Panel Mounting Details
- ☐ S8C Overhead Signs- Truss, Sign Panel Mounting Details, Laminated Panel- Type A
- ☐ S8D Overhead Signs- Truss, Removable Sign Panel Frames 2.794 m and 3.048 m Sign Panels
- ☐ S9 Overhead Signs- Walkway Details No. 1
- ☐ S10 Overhead Signs- Walkway Details No. 2
- ☐ S11 Overhead Signs- Walkway Safety Railing Details
- ☐ S13 Overhead Signs- Truss Pile Foundation

OVERHEAD SIGNS-LIGHTWEIGHT

- ☐ S14A Overhead Signs- Lightweight Balanced-Single Steel Post Connection and Mounting Details
- ☐ S14B Overhead Signs- Lightweight Balanced-Single Steel Post Details
- ☐ S15 Overhead Signs- Lightweight, Type A, Connection Details
- ☐ S16 Overhead Signs- Lightweight, Type B, Connection Details
- ☐ S17 Overhead Signs- Lightweight, Type C, Connection Details
- ☐ S18A Overhead Signs- Lightweight, Sign Panel Mounting Details, Laminated Panel- Type A
- ☐ S18B Overhead Signs- Lightweight, Light Fixture Mounting Details
- ☐ S20A Overhead Signs- Lightweight Post Details
- ☐ S20B Overhead Signs- Lightweight Foundation Details

OVERHEAD SIGNS-BOX BEAM CLOSED TRUSS ALTERNATIVE

- ☐ S39 Overhead Signs- Box Beam Closed Truss, Foundation Details
- ☐ S40A Overhead Signs- Box Beam Closed Truss, Two Post Type Frame Members
- ☐ S40B Overhead Signs- Box Beam Closed Truss, Single and Two Post Type, General Frame Details
- ☐ S40C Overhead Signs- Box Beam Closed Truss, Ribbed Sheet Metal Details
- ☐ S40D Overhead Signs- Box Beam Closed Truss, Two Post Type, Frame Details
- ☐ S40E Overhead Signs- Box Beam Closed Truss, Two Post Type, Frame Juncture Details
- ☐ S40F Overhead Signs- Box Beam Closed Truss, Two Post Type, Post Details
- ☐ S40G Overhead Signs- Box Beam Closed Truss, Single Post Type, Frame Members
- ☐ S40H Overhead Signs- Box Beam Closed Truss, Single Post Cantilever, Frame Details
- ☐ S40I Overhead Signs- Box Beam Closed Truss, Single Post Cantilever, Frame Juncture Details
- ☐ S40J Overhead Signs- Box Beam Closed Truss, Single Post Cantilever, Post Details
- ☐ S40K Overhead Signs- Box Beam Closed Truss, Single Post Butterfly, Frame Details
- ☐ S40L Overhead Signs- Box Beam Closed Truss, Single Post Butterfly, Frame Juncture Details
- ☐ S40M Overhead Signs- Box Beam Closed Truss, Single Post Butterfly, Post Details

OVERHEAD SIGNS-TUBULAR

- ☐ S40N Overhead Signs- Tubular, Instructions and Examples
- ☐ S40P Overhead Signs- Tubular, Single Post Type, Layout and Pipe Selection
- ☐ S40Q Overhead Signs- Tubular, Two Post Type, Layout and Pipe Selection
- ☐ S40R Overhead Signs- Tubular, Structural Frame Details No. 1
- ☐ S40S Overhead Signs- Tubular, Structural Frame Details No. 2
- ☐ S40T Overhead Signs- Tubular, Foundation Details

SIGNALS, LIGHTING AND ELECTRICAL SYSTEMS

- ■ ES-1A Signal, Lighting and Electrical Systems- Symbols and Abbreviations
- ■ ES-1B Signal, Lighting and Electrical Systems- Symbols and Abbreviations
- ☐ ES-2A Signal, Lighting and Electrical Systems- Service Equipment
- ☐ ES-2B Signal, Lighting and Electrical Systems- Service Equipment
- ☐ ES-2C Signal, Lighting and Electrical Systems- Service Equipment Notes
- ☐ ES-2D Signal, Lighting and Electrical Systems- Service Equipment and Typical Wiring Diagram, Type A
- ☐ ES-2E Signal, Lighting and Electrical Systems- Service Equipment and Typical Wiring Diagram, Type B
- ☐ ES-2F Signal, Lighting and Electrical Systems- Service Equipment and Typical Wiring Diagram, Type C
- ☐ ES-3A Signal, Lighting and Electrical Systems- Signal Heads and Mountings
- ☐ ES-3B Signal, Lighting and Electrical Systems- Signal Heads and Mountings
- ☐ ES-3C Signal, Lighting and Electrical Systems- Signal Heads and Mountings
- ☐ ES-3D Signal, Lighting and Electrical Systems- Signal Heads and Mountings
- ☐ ES-3E Signal, Lighting and Electrical Systems- Signal Heads and Mountings
- ☐ ES-4A Signal, Lighting and Electrical Systems- Controller Cabinet Details
- ☐ ES-4B Signal, Lighting and Electrical Systems- Controller Cabinet Details
- ☐ ES-4C Signal, Lighting and Electrical Systems- Controller Cabinet Details
- ☐ ES-4D Irrigation Controller Enclosure Cabinet
- ☐ ES-5A Signal, Lighting and Electrical Systems- Detectors
- ☐ ES-5B Signal, Lighting and Electrical Systems- Detectors
- ☐ ES-5C Signal, Lighting and Electrical Systems- Detectors
- ☐ ES-5D Signal, Lighting and Electrical Systems- Detectors
- ☐ ES-5E Signal, Lighting and Electrical Systems- Detectors
- ☐ ES-5F Signal, Lighting and Electrical Systems- Pedestrian Barricades
- ☐ ES-6A Signal and Lighting Standards- Type 1 Standards and Equipment Numbering
- ☐ ES-6AA Signal Standards- Push Button Posts
- ☐ ES-6B Lighting Standards- Types 15, 21 and 22
- ☐ ES-6C Lighting Standards- 24.4 m to 48.8 m High Mast Light Pole, Foundation Details
- ☐ ES-6D Lighting Standards- Types 30 and 31
- ☐ ES-6DA Lighting Standards- Type 32
- ☐ ES-6E Lighting Standards- Types 30 and 31, Base Details
- ☐ ES-6F Lighting Standards- 10 Degree Type
- ☐ ES-6H Lighting Standards- 10 Degree Type, Details
- ☐ RSP ES-6J SIGNAL AND LIGHTING STANDARDS- CASE 1 ARM LOADING, WIND VELOCITY = 113 km/h, ARM LENGTHS 4.6 m TO 9.1 m
- ☐ ES-6K Signal and Lighting Standards- Case 2 Arm Loading, Wind Velocity = 113 km/h, Arm Lengths 6.1 m to 9.1 m
- ☐ ES-6L Signal and Lighting Standards- Case 3 Arm Loading, Wind Velocity = 113 km/h, Arm Lengths 4.6 m to 13.7 m
- ☐ ES-6M Signal and Lighting Standards- Case 4 Arm Loading, Wind Velocity = 113 km/h, Arm Lengths 7.6 m to 13.7 m
- ☐ ES-6MA Signal and Lighting Standards- Case 5 Arm Loading, Wind Velocity = 113 km/h, Arm Lengths 15.2 m to 16.8 m
- ☐ ES-6N Signal and Lighting Standards- Type 40-0-129
- ☐ ES-6O Signal and Lighting Standards- Case 1 Arm Loading, Wind Velocity = 129 km/h, Arm Lengths 7.6 m to 9.1 m
- ☐ ES-6P Signal and Lighting Standards- Case 2 Arm Loading, Wind Velocity = 129 km/h, Arm Lengths 6.1 m to 9.1 m
- ☐ ES-6Q Signal and Lighting Standards- Case 3 Arm Loading, Wind Velocity = 129 km/h, Arm Lengths 6.1 m to 13.7 m
- ☐ RSP ES-6R SIGNAL AND LIGHTING STANDARDS- CASE 4 ARM LOADING, WIND VELOCITY = 129 km/h, ARM LENGTHS 7.6 m TO 13.7 m
- ☐ ES-6RA Signal and Lighting Standards- Case 5 Arm Loading, Wind Velocity = 129 km/h, Arm Lengths 15.2 m to 16.8 m
- ☐ ES-6RB Signal and Lighting Standards- Case 5 Arm Loading, Wind Velocity = 129 km/h, Arm Lengths 18.2 m to 19.8 m
- ☐ ES-6S Signal and Lighting Standards- Details No. 1
- ☐ ES-6T Signal and Lighting Standards- Details No. 2
- ☐ ES-6TA Signal and Lighting Standards- Pole and Mast Arm Alternatives
- ☐ ES-6U Lighting Standards- Type 15 Slip Base Insert
- ☐ ES-6V Signal and Sign Standards- Type 33 Left Turn
- ☐ ES-7A Signal, Lighting and Electrical Systems- Electrical Details, Structure Installations
- ☐ ES-7B Signal, Lighting and Electrical Systems- Electrical Details, Structure Installations
- ☐ ES-7C Signal, Lighting and Electrical Systems- Electrical Details, Structure Installations
- ☐ ES-7D Signal, Lighting and Electrical Systems- Electrical Details, Structure Installations
- ☐ ES-7E Signal, Lighting and Electrical Systems- Electrical Details, Structure Installations
- ☐ ES-7F Signal, Lighting and Electrical Systems- Flush Soffit Luminaire Modification Details, Structure Installations
- ■ ES-8 Signal, Lighting and Electrical Systems- Pull Box Details
- ☐ ES-9A Signal, Lighting and Electrical Systems- Cantilever Flashing Beacon, Types 9, 9A and 9B
- ☐ ES-9B Signal, Lighting and Electrical Systems- Cantilever Flashing Beacon, Types 9, 9A and 9B
- ☐ ES-10 Signal, Lighting and Electrical Systems- Isolux Diagrams
- ☐ ES-11 Signal, Lighting and Electrical Systems- Foundation Installations
- ☐ ES-12 Signal, Lighting and Electrical Systems- Pedestrian Undercrossing Fluorescent Lighting Fixture
- ☐ ES-13 Signal, Lighting and Electrical Systems- Splicing Details
- ☐ ES-14 Signal, Lighting and Electrical Systems- Wiring Details and Fuse Ratings
- ☐ ES-15 Signal, Lighting and Electrical Systems- Pedestrian Overcrossing Fluorescent Lighting Fixture
- ☐ ES-27A Signal, Lighting and Electrical Systems- Extinguishable Message Sign, 250 mm Letters
- ☐ ES-27B Signal, Lighting and Electrical Systems- Extinguishable Message Sign, 250 mm Letters
- ☐ ES-28 Signal, Lighting and Electrical Systems- Extinguishable Message Sign and Flashing Beacons

SIGN ILLUMINATION

- ☐ ES-29 Sign Illumination- Mercury Sign Illumination Equipment
- ☐ ES-30 Sign Illumination- 915 mm Fluorescent Sign Illumination Equipment
- ☐ ES-32A Sign Illumination- Sign Illumination Equipment
- ☐ ES-32B Sign Illumination- Sign Illumination Control
- ☐ ES-33 Sign Illumination- Internally Illuminated Street Name Sign

CLOSED CIRCUIT TELEVISION

- ☐ RSP ES-34A CLOSED CIRCUIT TELEVISION- POLE DETAILS
- ☐ ES-34B Closed Circuit Television- Pole Details- Overhead Sign Mounted

NEW STANDARD PLANS

- ■ NSP D75A PIPE INLETS
- ■ NSP D75B PIPE INLETS
- ■ NSP D75C PIPE INLETS- LADDER, STEP AND TRASH RACK DETAILS

SHEET 2 OF 2
STANDARD PLANS LIST
(July, 1997 Edition)
REVISED DECEMBER 4, 1997

The Standard Plan sheets applicable to this contract include, but are not limited to those indicated by a marked box.

DIST	COUNTY	ROUTE	KILOMETER POST TOTAL PROJECT	SHEET No.	TOTAL SHEETS
11	SD	Var	Var		

REGISTERED CIVIL ENGINEER

PLANS APPROVAL DATE

REGISTERED PROFESSIONAL ENGINEER CIVIL STATE OF CALIFORNIA

The State of California or its officers or agents shall not be responsible for the accuracy or completeness of electronic copies of this plan sheet.

Caltrans Metric

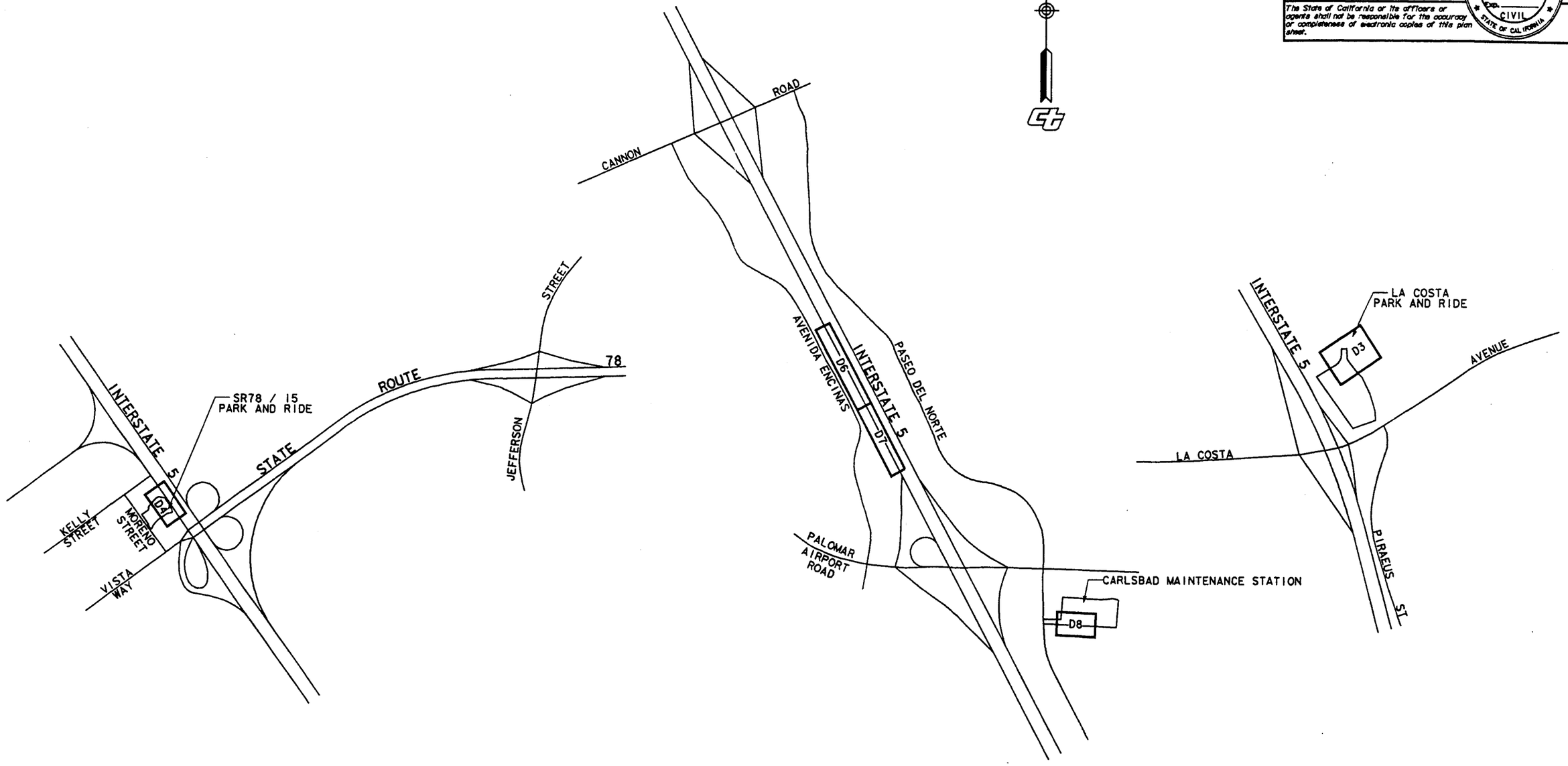

KEY MAP

NO SCALE

K-1

CALCULATED/ DESIGNED BY		DATE	REVISED BY
CHECKED BY			DATE REVISED

PROJECT ENGINEER

STATE OF CALIFORNIA - DEPARTMENT OF TRANSPORTATION

Caltrans

●DATE● ●TI. ●FILE●

FOR REDUCED PLANS ORIGINAL SCALE IS IN MILLIMETERS 0 20 40 60 80

USERNAME => ●USER

CU 00000 EA 000000

LAST REVISION

DIST	COUNTY	ROUTE	KILOMETER POST TOTAL PROJECT	SHEET No	TOTAL SHEETS
11	SD	Var	Var		

REGISTERED CIVIL ENGINEER

PLANS APPROVAL DATE

REGISTERED PROFESSIONAL ENGINEER — No. — Exp. — CIVIL — STATE OF CALIFORNIA

The State of California or its officers or agents shall not be responsible for the accuracy or completeness of electronic copies of this plan sheet.

Caltrans Metric

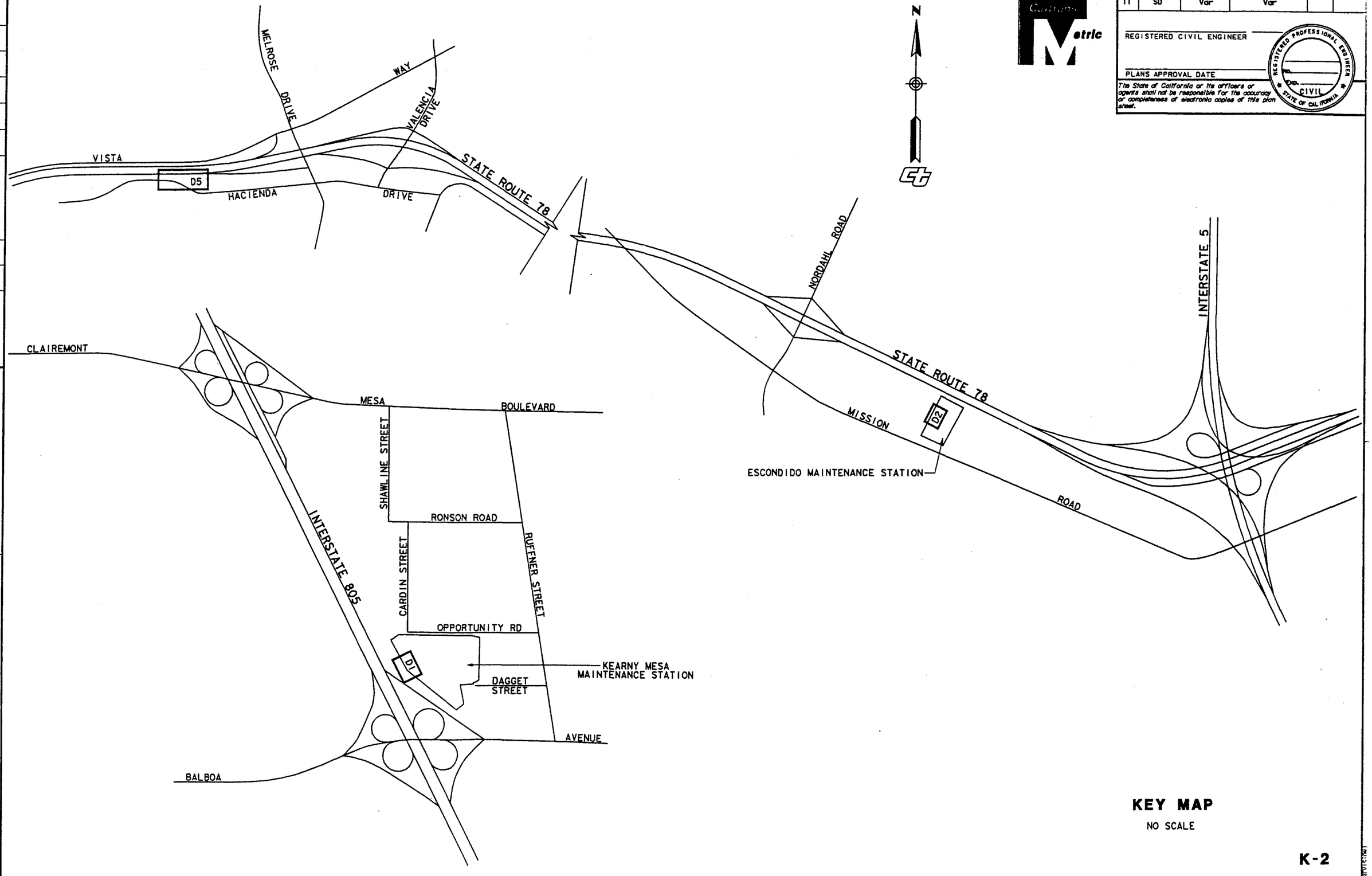

KEY MAP

NO SCALE

K-2

DATE	REVISED BY	DATE REVISED

CALCULATED/DESIGNED BY

CHECKED BY

PROJECT ENGINEER

STATE OF CALIFORNIA - DEPARTMENT OF TRANSPORTATION

Caltrans

FOR REDUCED PLANS ORIGINAL SCALE IS IN MILLIMETERS 0 20 40 60 80

USERNAME => $USER

DATE$ $TIME$ $FILE$

DIST	COUNTY	ROUTE	KILOMETER POST TOTAL PROJECT	SHEET No	TOTAL SHEETS
11	SD	Var	Var		

REGISTERED CIVIL ENGINEER

PLANS APPROVAL DATE

The State of California or its officers or agents shall not be responsible for the accuracy or completeness of electronic copies of this plan sheet.

REGISTERED PROFESSIONAL ENGINEER No. Exp. CIVIL STATE OF CALIFORNIA

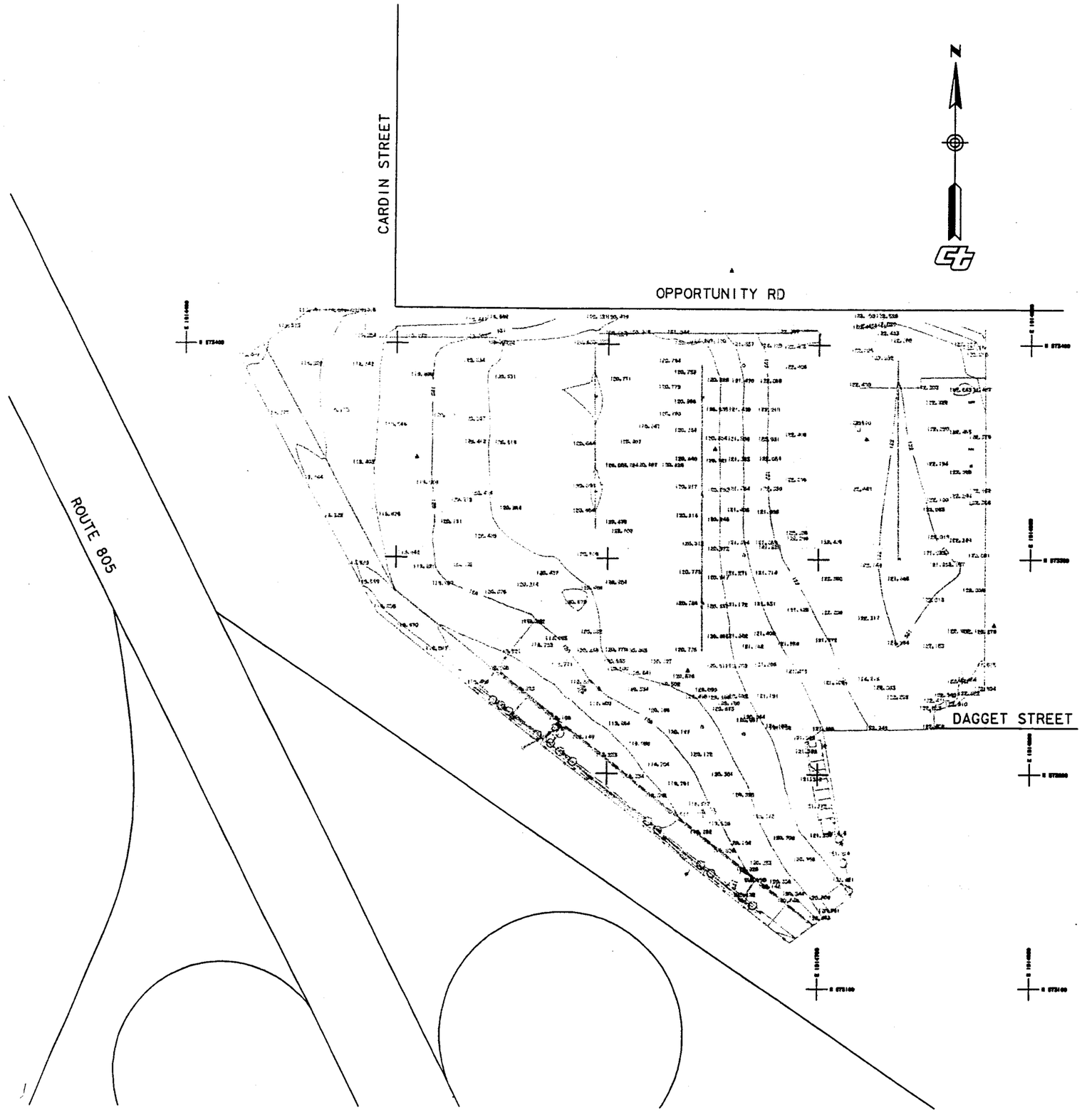

BEARINGS AND COORDINATES AS SHOWN HEREON ARE IN TERMS OF THE CALIFORNIA COORDINATE SYTEM OF 1983 (1991.35), ZONE 6, BASED LOCALLY UPON THE FOLLOWING CONTINUOUSLY OPERATING REFERENCE STATIONS AS PUBLISHED BY THE NATIONAL GEODETIC SURVEY AND TRANSFORMED TO THE 1991.35 EPOCH USING THE HTDP MODEL VERSION 2.1.

STATION	NORTHING(Y)	EASTING(X)
MONP	580,447.164	1,983,875.722
S103	577,862.412	1,906,370.402
TRAK	662,023.898	1,855,858.790

BENCHMARK

ELEVATIONS AS SHOWN HEREON ARE IN TERMS OF THE NORTH AMERICAN VERTICAL DATUM OF 1988 BASED LOCALLY UPON THE FOLLOWING BENCHMARKS.

BENCHMARK	NAVD88 ELEV.	SOURCE
TRAK	151.604	COUNTY OF ORANGE
DASH	462.113	NGS
F 1415	75.015	NGS

PROJECT CONTROL

STA NAME	NORTHING(Y) METERS	EASTING(X) METERS	EPOCH DATE	ELEVATION METERS	DESCRIPTION
19	573,351.215	1,914,651.032	1991.35	120.922	PK NAIL & SHINER IN A/C
20	573,247.966	1,914,638.691	1991.35	120.676	PK NAIL & SHINER IN A/C

CONSTRUCTION STAKING SURVEY CONTROL DATA

SCALE: 1:1000

CSS-1

STATE OF CALIFORNIA - DEPARTMENT OF TRANSPORTATION

Caltrans

PROJECT ENGINEER

CALCULATED/DESIGNED BY | DATE | REVISED BY

CHECKED BY | DATE REVISED

15 MAR 98 17:53:24 q:\57704\34358\dgn\div\oss01.div

FOR REDUCED PLANS ORIGINAL SCALE IS IN MILLIMETERS 0 20 40 60 80

USERNAME => $USER

DIST	COUNTY	ROUTE	KILOMETER POST TOTAL PROJECT	SHEET No	TOTAL SHEETS
11	SD	Var	Var		

REGISTERED CIVIL ENGINEER

PLANS APPROVAL DATE

The State of California or its officers or agents shall not be responsible for the accuracy or completeness of electronic copies of this plan sheet.

REGISTERED PROFESSIONAL ENGINEER No. EXP. CIVIL STATE OF CALIFORNIA

Caltrans Metric

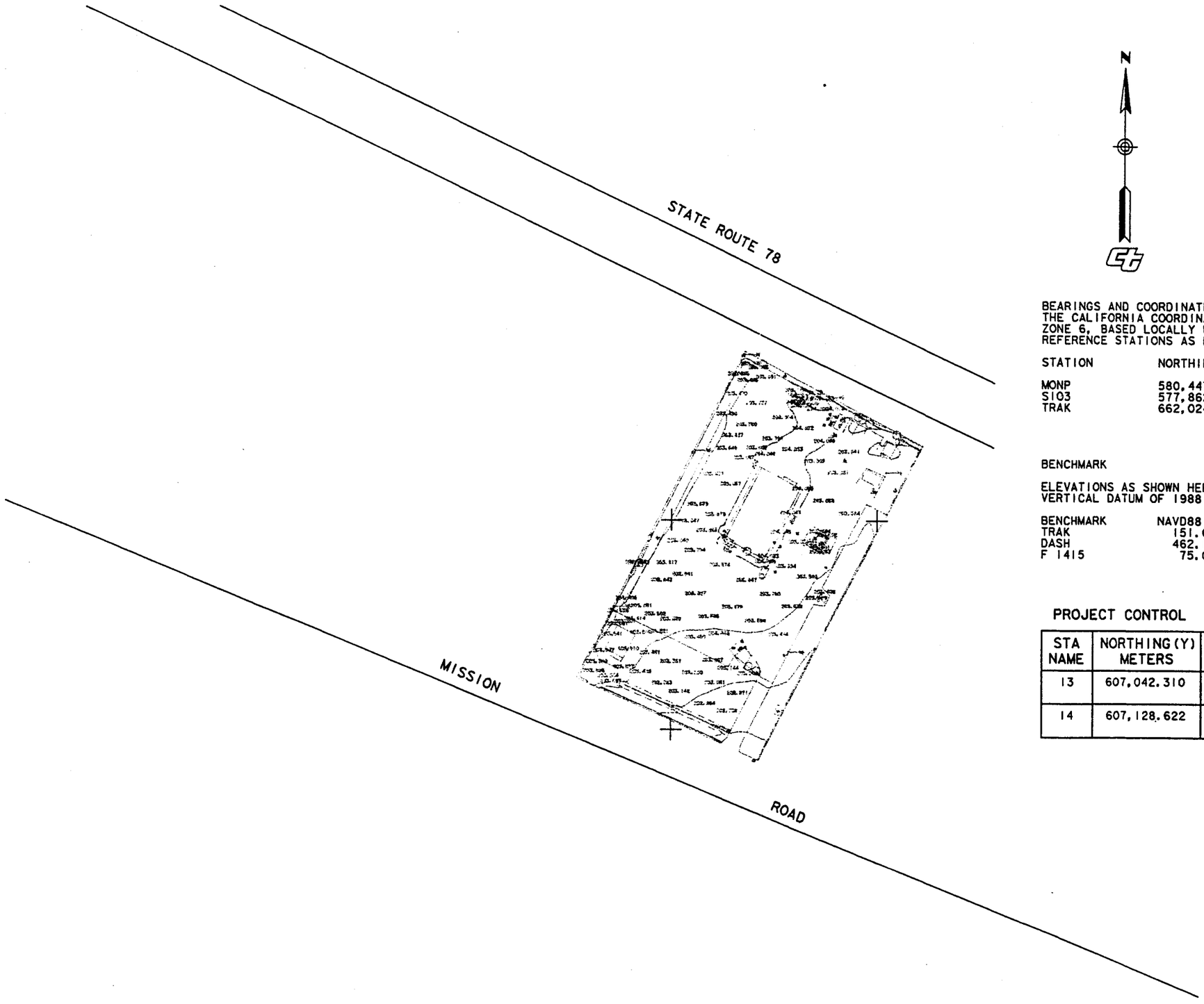

BEARINGS AND COORDINATES AS SHOWN HEREON ARE IN TERMS OF THE CALIFORNIA COORDINATE SYSTEM OF 1983 (EPOCH 1995.50). ZONE 6, BASED LOCALLY UPON THE FOLLOWING CONTINUOUSLY OPERATING REFERENCE STATIONS AS PUBLISHED BY THE NATIONAL GEODETIC SURVEY.

STATION	NORTHING(Y)	EASTING(X)
MONP	580,447.284	1,983,875.610
S103	577,862.544	1,906,370.297
TRAK	662,024.000	1,855,858.672

BENCHMARK

ELEVATIONS AS SHOWN HEREON ARE IN TERMS OF THE NORTH AMERICAN VERTICAL DATUM OF 1988 BASED LOCALLY UPON THE FOLLOWING BENCHMARKS.

BENCHMARK	NAVD88 ELEV.	SOURCE
TRAK	151.604	COUNTY OF ORANGE
DASH	462.113	NGS
F 1415	75.015	NGS

PROJECT CONTROL

STA NAME	NORTHING(Y) METERS	EASTING(X) METERS	EPOCH DATE	ELEVATION METERS	DESCRIPTION
13	607,042.310	1,919,034.574	1991.35	203.433	PK NAIL & SHINER OF SOUTH END OF MAINTENANCE YARD
14	607,128.622	1,919,084.344	1991.35	203.906	PK NAIL & SHINER OF SOUTH END OF MAINTENANCE YARD

CONSTRUCTION STAKING SURVEY CONTROL DATA

SCALE: 1:1000

CSS-2

STATE OF CALIFORNIA - DEPARTMENT OF TRANSPORTATION

Caltrans

PROJECT ENGINEER

CALCULATED/DESIGNED BY | CHECKED BY | DATE | REVISED BY | DATE REVISED

15 MAR 98 17:56... q:\57704\34358\dgn\div\oss02.div

FOR REDUCED PLANS ORIGINAL 0 20 40 60 80

DIST	COUNTY	ROUTE	KILOMETER POST TOTAL PROJECT	SHEET No	TOTAL SHEETS
11	SD	Var	Var	-	

REGISTERED CIVIL ENGINEER

PLANS APPROVAL DATE

REGISTERED PROFESSIONAL ENGINEER NO. EXP. CIVIL STATE OF CALIFORNIA

The State of California or its officers or agents shall not be responsible for the accuracy or completeness of electronic copies of this plan sheet.

California Metric

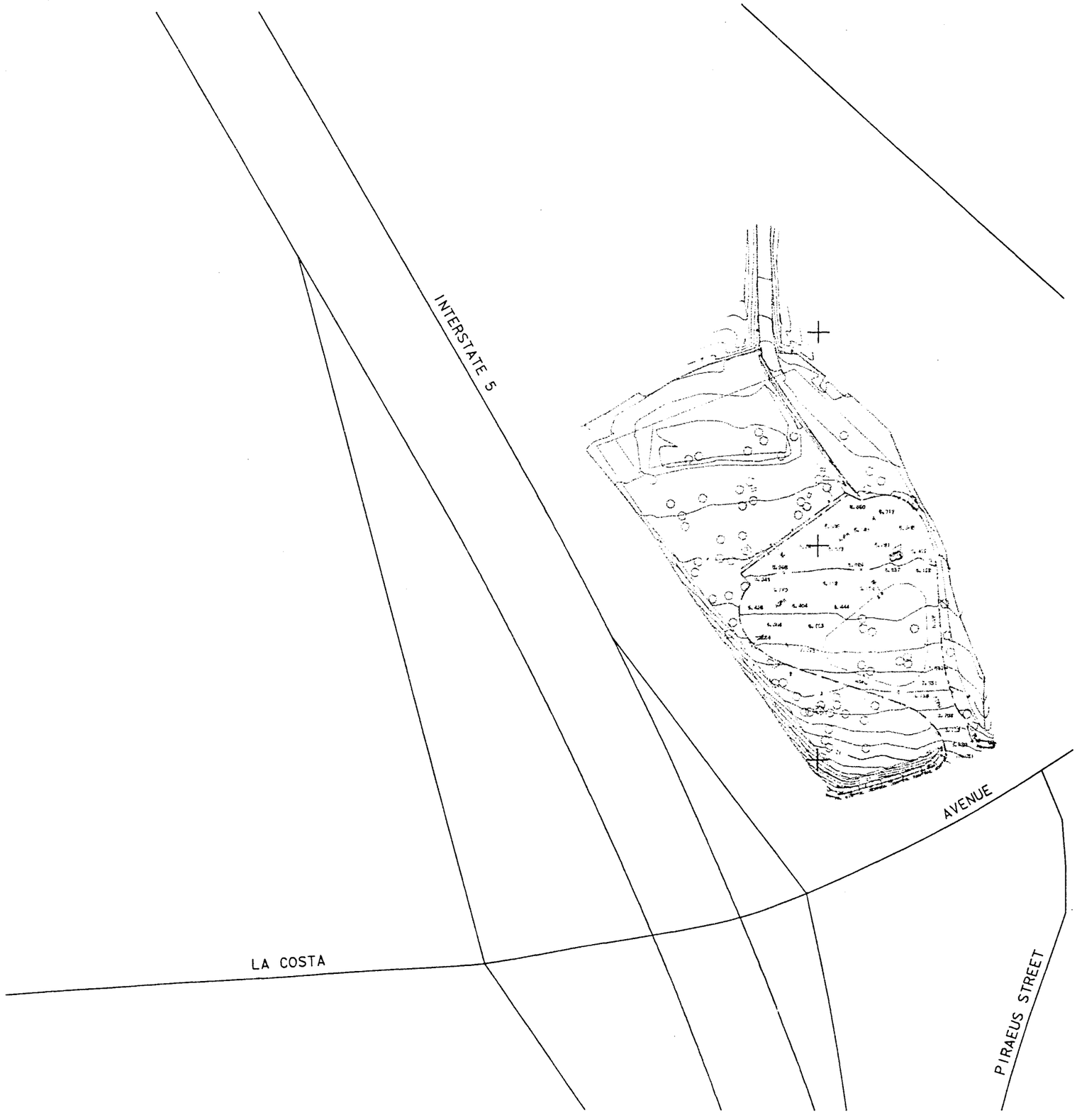

BEARINGS AND COORDINATES AS SHOWN HEREON ARE IN TERMS OF

BEARINGS AND COORDINATES AS SHOWN HEREON ARE IN TERMS OF THE CALIFORNIA COORDINATE SYSTEM OF 1983 (EPOCH 1995.50). ZONE 6, BASED LOCALLY UPON THE FOLLOWING CONTINUOUSLY OPERATING REFERENCE STATIONS AS PUBLISHED BY THE NATIONAL GEODETIC SURVEY.

STATION	NORTHING (Y)	EASTING (X)
MONP	580,447.284	1,983,875.610
S103	577,862.544	1,906,370.297
TRAK	662,024.000	1,855,858.672

BENCHMARK

ELEVATIONS AS SHOWN HEREON ARE IN TERMS OF THE NORTH AMERICAN VERTICAL DATUM OF 1998 BASED LOCALLY UPON THE FOLLOWING CALIFORNIA DEPARTMENT OF TRANSPORTATION BENCHMARK.

BM 5-44.11 14.361 (NAVD88-GPS 2ND ORDER)

2" BRASS DISC STAMPED "CAL DEPT. TRANS." BM 5-44.11 1997", LOCATED AT THE NORTHEAST BRIDGE RETURN AT I-5 & LA COSTA AVE.

PROJECT CONTROL

STA NAME	NORTHING (Y) METERS	EASTING (X) METERS	EPOCH DATE	ELEVATION METERS	DESCRIPTION
5	593,995.410	1,905,121.982	1995.50	4.444	1x2 & TACK-SOUTHSIDE OF MANCHESTER
6	594,109.694	1,905,326.472	1995.50	4.070	1x2 & TACK-NORTHSIDE OF MANCHESTER

CONSTRUCTION STAKING SURVEY CONTROL DATA

SCALE: 1:1000

CSS-3

DATE	REVISED BY	DATE REVISED

CALCULATED/DESIGNED BY

CHECKED BY

PROJECT ENGINEER

STATE OF CALIFORNIA - DEPARTMENT OF TRANSPORTATION

Caltrans

15 MAR 98 16:28:20 qt\57704\34358\dgn\div\oa803.div

DIST	COUNTY	ROUTE	KILOMETER POST TOTAL PROJECT	SHEET No	TOTAL SHEETS
11	SD	Var	Var		

REGISTERED CIVIL ENGINEER

PLANS APPROVAL DATE

The State of California or its officers or agents shall not be responsible for the accuracy or completeness of electronic copies of this plan sheet.

REGISTERED PROFESSIONAL ENGINEER No. Exp. CIVIL STATE OF CALIFORNIA

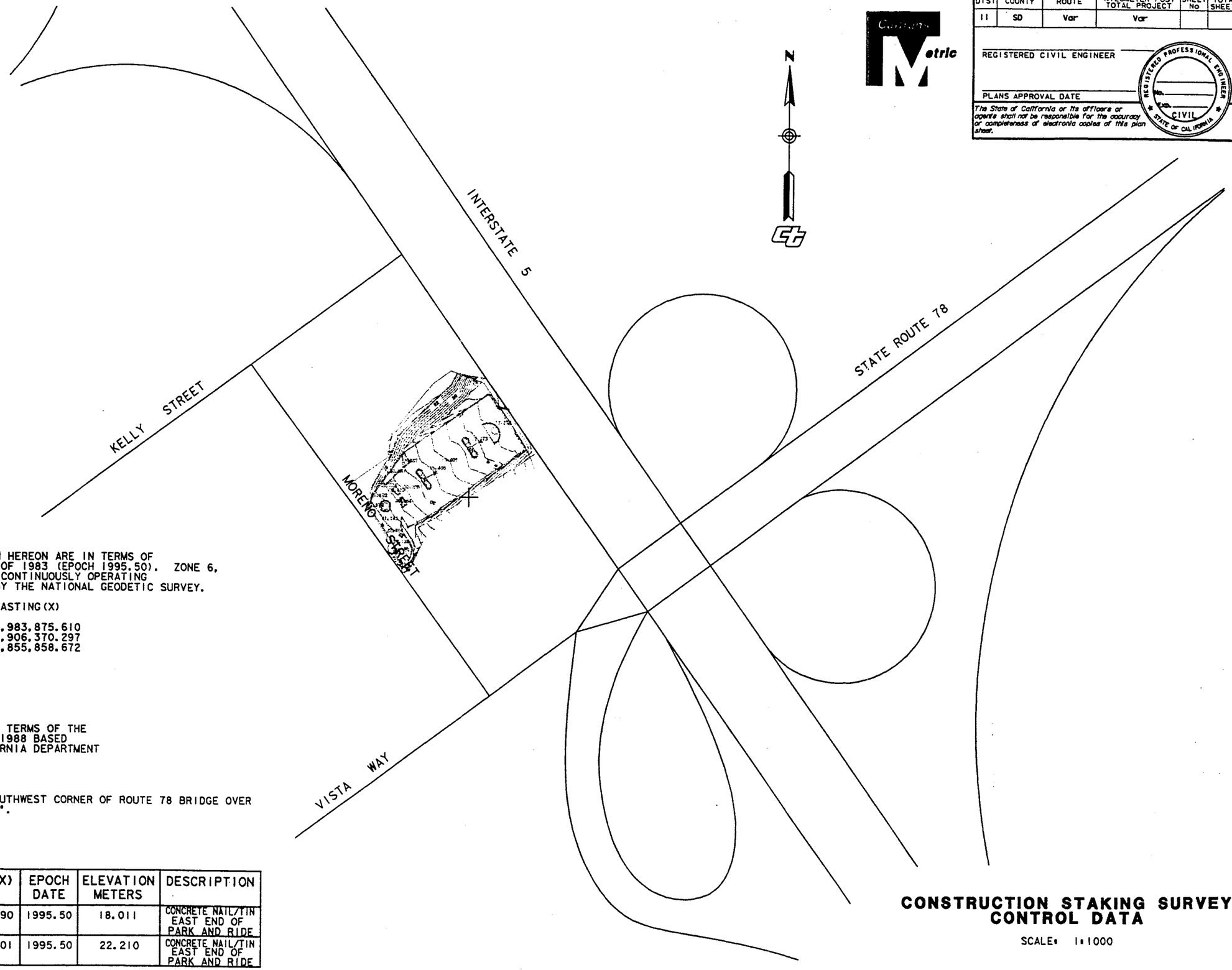

BEARINGS AND COORDINATES AS SHOWN HEREON ARE IN TERMS OF THE CALIFORNIA COORDINATE SYSTEM OF 1983 (EPOCH 1995.50). ZONE 6, BASED LOCALLY UPON THE FOLLOWING CONTINUOUSLY OPERATING REFERENCE STATIONS AS PUBLISHED BY THE NATIONAL GEODETIC SURVEY.

STATION	NORTHING (Y)	EASTING (X)
MONP	580,447.284	1,983,875.610
SIO3	577,862.544	1,906,370.297
TRAK	662,024.000	1,855,858.672

BENCHMARK

ELEVATIONS AS SHOWN HEREON ARE IN TERMS OF THE NORTH AMERICAN VERTICAL DATUM OF 1988 BASED LOCALLY UPON THE FOLLOWING CALIFORNIA DEPARTMENT OF TRANSPORTATION BENCHMARK.

BM 78-0.0 22.796 (NAVD88)

THE MONUMENT IS LOCATED IN THE SOUTHWEST CORNER OF ROUTE 78 BRIDGE OVER ROUTE 5, AND STAMPED '78-0.0 1988'.

PROJECT CONTROL

STA NAME	NORTHING (Y) METERS	EASTING (X) METERS	EPOCH DATE	ELEVATION METERS	DESCRIPTION
1	612,619.042	1,897,210.390	1995.50	18.011	CONCRETE NAIL/TIN EAST END OF PARK AND RIDE
2	612,584.695	1,897,152.801	1995.50	22.210	CONCRETE NAIL/TIN EAST END OF PARK AND RIDE

CONSTRUCTION STAKING SURVEY CONTROL DATA

SCALE: 1:1000

CSS-4

CALCULATED/ DESIGNED BY	DATE	REVISED BY
CHECKED BY		DATE REVISED

PROJECT ENGINEER

STATE OF CALIFORNIA - DEPARTMENT OF TRANSPORTATION

Caltrans

15 MAR 98 18:.. 10 q:\57704\34358\dgn\div\oss04.div

FOR REDUCED PLANS ORIGINAL SCALE IS IN MILLIMETERS 0 20 40 60 80

USERNAME => $USER

CU 00000

EA 000000

DIST	COUNTY	ROUTE	KILOMETER POST TOTAL PROJECT	SHEET No	TOTAL SHEETS
11	SD	Var	Var		

REGISTERED CIVIL ENGINEER

PLANS APPROVAL DATE

REGISTERED PROFESSIONAL ENGINEER No. EXP. CIVIL STATE OF CALIFORNIA

The State of California or its officers or agents shall not be responsible for the accuracy or completeness of electronic copies of this plan sheet.

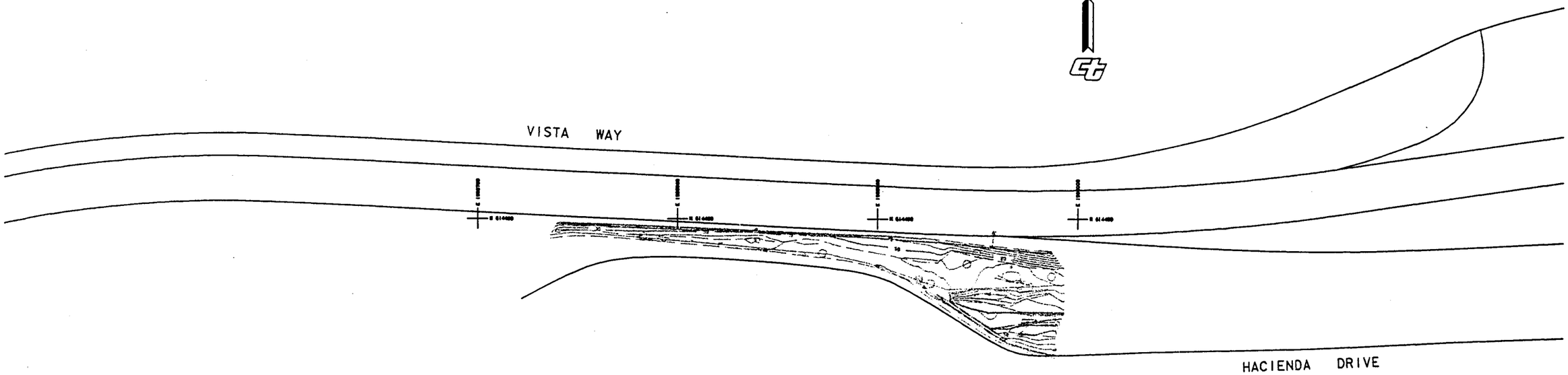

BEARINGS AND COORDINATES AS SHOWN HEREON ARE IN TERMS OF THE CALIFORNIA COORDINATE SYTEM OF 1983 (1991.35), ZONE 6, BASED LOCALLY UPON THE FOLLOWING CONTINUOUSLY OPERATING REFERENCE STATIONS AS PUBLISHED BY THE NATIONAL GEODETIC SURVEY AND TRANSFORMED TO THE 1991.35 EPOCH USING THE HTDP MODEL VERSION 2.1.

STATION	NORTHING (Y)	EASTING (X)
MONP	580,447.164	1,983,875.722
S103	577,862.412	1,906,370.402
TRAK	662,023.898	1,855,858.790

BENCHMARK

ELEVATIONS AS SHOWN HEREON ARE IN TERMS OF THE NORTH AMERICAN VERTICAL DATUM OF 1988 BASED LOCALLY UPON THE FOLLOWING BENCHMARKS.

BENCHMARK	NAVD88 ELEV.	SOURCE
TRAK	151.604	COUNTY OF ORANGE
DASH	462.113	NGS
F 1415	75.015	NGS

PROJECT CONTROL

STA NAME	NORTHING (Y) METERS	EASTING (X) METERS	EPOCH DATE	ELEVATION METERS	DESCRIPTION
11	614,220.671	1,906,031.661	1991.35	95.079	CHISLED "X" IN CULVERT-HACIENDA & LA TORTUGA
12	614,311.923	1,905,968.046	1991.35	90.640	CHISLED "X" IN CULVERT-HACIENDA & LA TORTUGA

CONSTRUCTION STAKING SURVEY CONTROL DATA

SCALE: 1:1000

CSS-5

DATE	REVISED BY	DATE REVISED
CALCULATED/ DESIGNED BY		
CHECKED BY		

PROJECT ENGINEER

STATE OF CALIFORNIA - DEPARTMENT OF TRANSPORTATION

Caltrans

15 MAR 98 18:13:34 q:\57704\34358\dgn\div\cs805.div

FOR REDUCED PLANS ORIGINAL 0 20 40 60 80

USERNAME => $USER

LAST REVISION

DIST	COUNTY	ROUTE	KILOMETER POST TOTAL PROJECT	SHEET No	TOTAL SHEETS
11	SD	Var	Var		

REGISTERED CIVIL ENGINEER

PLANS APPROVAL DATE

REGISTERED PROFESSIONAL ENGINEER — NO. — EXP. — CIVIL — STATE OF CALIFORNIA

The State of California or its officers or agents shall not be responsible for the accuracy or completeness of electronic copies of this plan sheet.

Caltrans Metric

BEARINGS AND COORDINATES AS SHOWN HEREON ARE IN TERMS OF THE CALIFORNIA COORDINATE SYTEM OF 1983 (1991.35), ZONE 6, BASED LOCALLY UPON THE FOLLOWING CONTINUOUSLY OPERATING REFERENCE STATIONS AS PUBLISHED BY THE NATIONAL GEODETIC SURVEY AND TRANSFORMED TO THE 1991.35 EPOCH USING THE HTDP MODEL VERSION 2.1.

STATION	NORTHING(Y)	EASTING(X)
MONP	580,447.164	1,983,875.722
S103	577,862.412	1,906,370.402
TRAK	662,023.898	1,855,858.790

BENCHMARK

ELEVATIONS AS SHOWN HEREON ARE IN TERMS OF THE NORTH AMERICAN VERTICAL DATUM OF 1988 BASED LOCALLY UPON THE FOLLOWING BENCHMARKS.

BENCHMARK	NAVD88 ELEV.	SOURCE
TRAK	151.604	COUNTY OF ORANGE
DASH	462.113	NGS
F 1415	75.015	NGS

PROJECT CONTROL

STA NAME	NORTHING(Y) METERS	EASTING(X) METERS	EPOCH DATE	ELEVATION METERS	DESCRIPTION
109	606,962.349	1,899,666.702	1991.35	16.879	PK NAIL & SHINER IN A/C
110	606,679.714	1,899,725.545	1991.35	18.421	PK NAIL & SHINER IN A/C

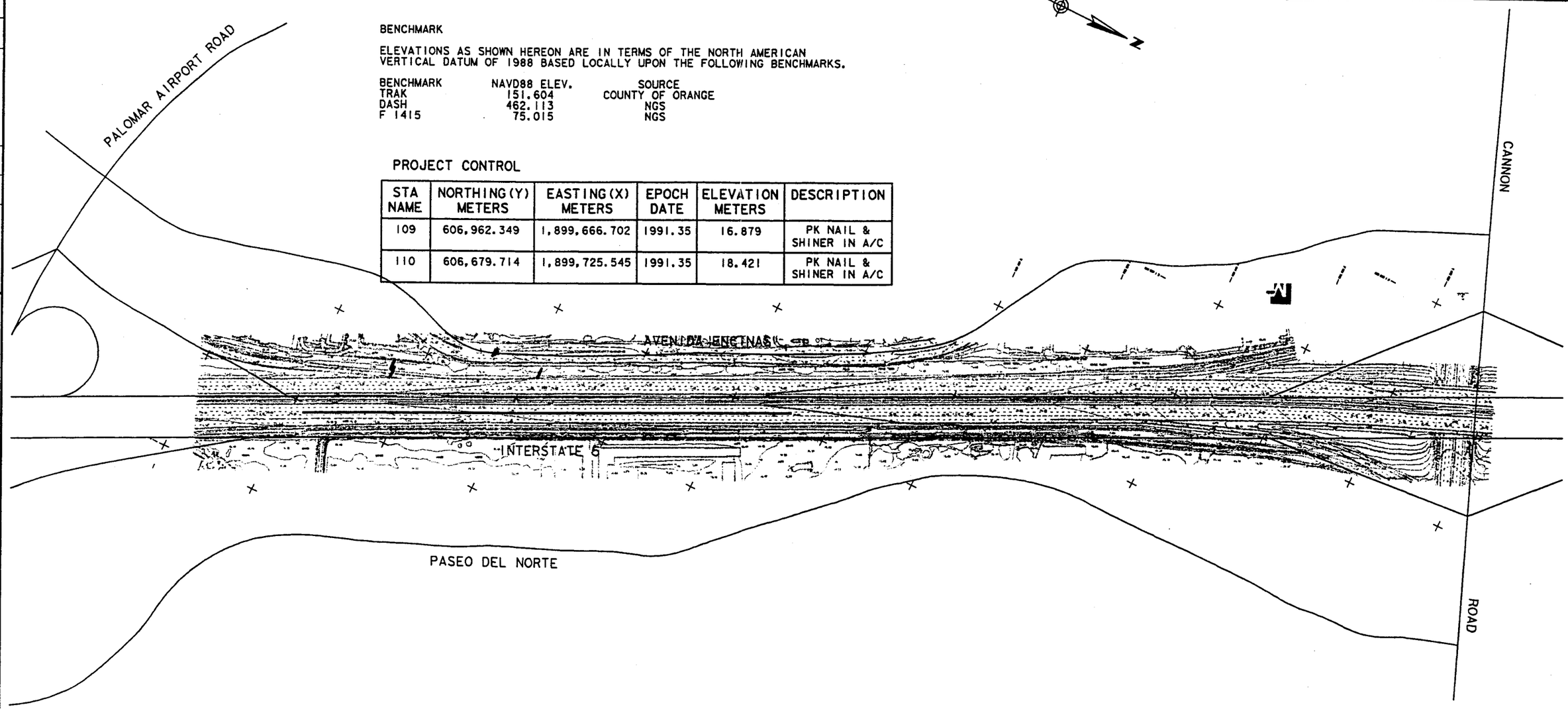

CONSTRUCTION STAKING SURVEY CONTROL DATA

SCALE: 1:2000

CSS-6

DATE	REVISED BY	DATE	REVISED BY

CALCULATED/DESIGNED BY

CHECKED BY

PROJECT ENGINEER

STATE OF CALIFORNIA - DEPARTMENT OF TRANSPORTATION

Caltrans

15 MAR 98 18:11:28 q:\57704\34358\dgn\div\oas06.div

FOR REDUCED PLANS ORIGINAL SCALE IS IN MILLIMETERS 0 20 40 60 80

USERNAME => $USER

LAST REVISION

DIST	COUNTY	ROUTE	KILOMETER POST TOTAL PROJECT	SHEET No	TOTAL SHEETS
11	SD	Var	Var		

REGISTERED CIVIL ENGINEER

PLANS APPROVAL DATE

The State of California or its officers or agents shall not be responsible for the accuracy or completeness of electronic copies of this plan sheet.

REGISTERED PROFESSIONAL ENGINEER No. Exp. CIVIL STATE OF CALIFORNIA

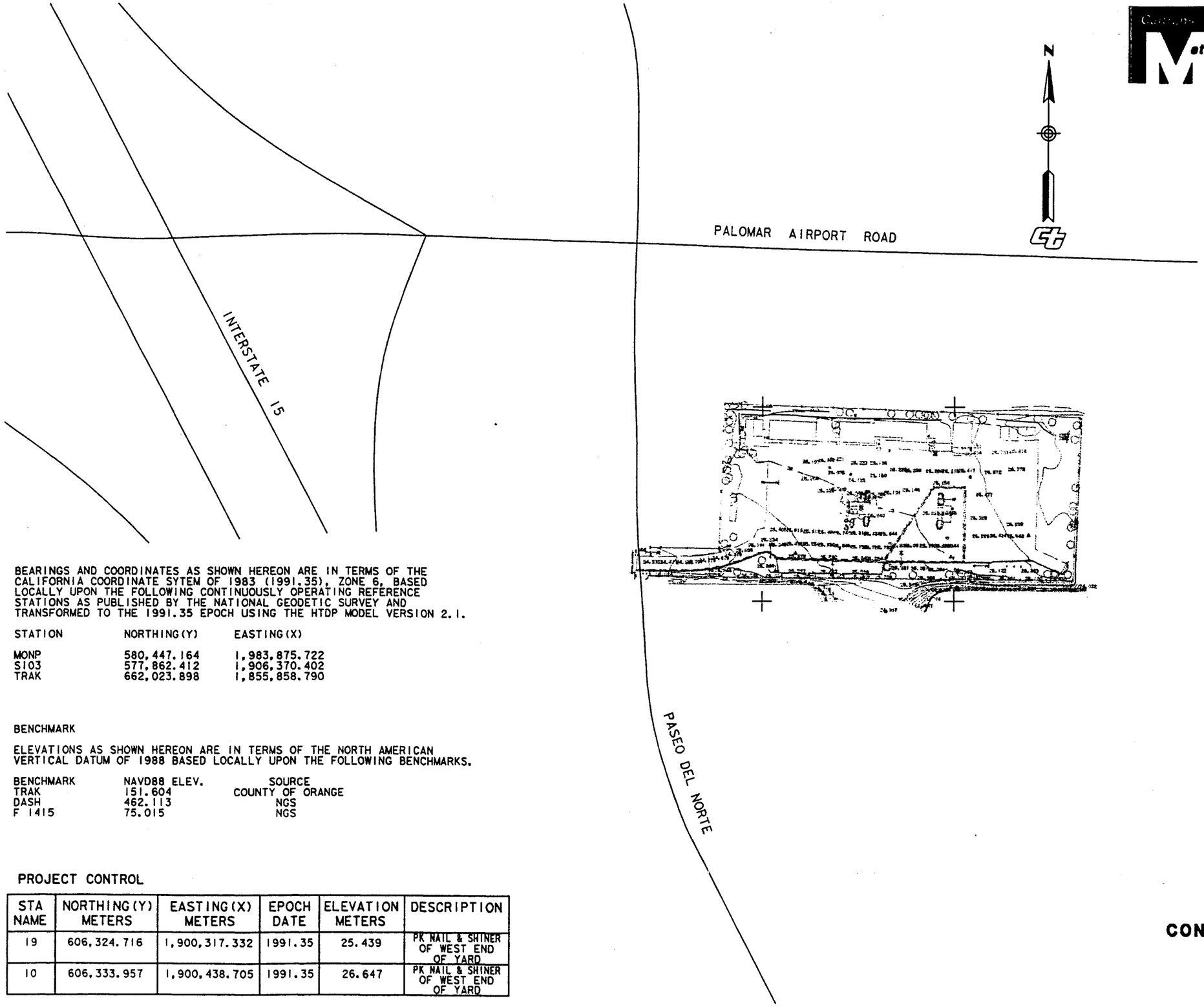

BEARINGS AND COORDINATES AS SHOWN HEREON ARE IN TERMS OF THE CALIFORNIA COORDINATE SYTEM OF 1983 (1991.35), ZONE 6, BASED LOCALLY UPON THE FOLLOWING CONTINUOUSLY OPERATING REFERENCE STATIONS AS PUBLISHED BY THE NATIONAL GEODETIC SURVEY AND TRANSFORMED TO THE 1991.35 EPOCH USING THE HTDP MODEL VERSION 2.1.

STATION	NORTHING(Y)	EASTING(X)
MONP	580,447.164	1,983,875.722
S103	577,862.412	1,906,370.402
TRAK	662,023.898	1,855,858.790

BENCHMARK

ELEVATIONS AS SHOWN HEREON ARE IN TERMS OF THE NORTH AMERICAN VERTICAL DATUM OF 1988 BASED LOCALLY UPON THE FOLLOWING BENCHMARKS.

BENCHMARK	NAVD88 ELEV.	SOURCE
TRAK	151.604	COUNTY OF ORANGE
DASH	462.113	NGS
F 1415	75.015	NGS

PROJECT CONTROL

STA NAME	NORTHING(Y) METERS	EASTING(X) METERS	EPOCH DATE	ELEVATION METERS	DESCRIPTION
19	606,324.716	1,900,317.332	1991.35	25.439	PK NAIL & SHINER OF WEST END OF YARD
10	606,333.957	1,900,438.705	1991.35	26.647	PK NAIL & SHINER OF WEST END OF YARD

CONSTRUCTION STAKING SURVEY CONTROL DATA

SCALE: 1:1000

CSS-7

CALCULATED/ DESIGNED BY	DATE	REVISED BY
CHECKED BY		DATE REVISED

PROJECT ENGINEER

STATE OF CALIFORNIA - DEPARTMENT OF TRANSPORTATION

Caltrans

15 MAR 98 18:..33 q:\57704\34358\dgn\div\oss07.div

FOR REDUCED PLANS ORIGINAL SCALE IS IN MILLIMETERS 0 20 40 60 80

USERNAME => $USER

CU 00000

EA 000000

DIST	COUNTY	ROUTE	KILOMETER POST TOTAL PROJECT	SHEET NO	TOTAL SHEETS
11	SD	Var	Var		

REGISTERED CIVIL ENGINEER

PLANS APPROVAL DATE

REGISTERED PROFESSIONAL ENGINEER — CIVIL — STATE OF CALIFORNIA

The State of California or its officers or agents shall not be responsible for the accuracy or completeness of electronic copies of this plan sheet.

Caltrans Metric

COORDINATE POINT	NORTHING	EASTING
1	607075.1458	1918988.2119
2	607076.9204	1918989.1343
3	607077.9851	1918989.6877
4	607081.5270	1918987.3185
5	607103.7981	1918998.8947
6	607100.3892	1919001.3330
7	607100.9956	1919001.1422
8	607103.4817	1918999.5033
9	607107.6538	1919000.1813
10	607108.8382	1919000.3739
11	607112.3152	1919000.9390
12	607081.0905	1918991.3019
13	607101.4562	1919000.2561
14	607080.5484	1918986.0081
15	607103.6806	1918997.1692
16	607075.2264	1918987.4928
17	607074.4486	1918988.2790

NOTE:

1. FOR COMPLETE R/W AND ACCURATE ACESS DATA, SEE R/W RECORD MAPS AT DISTRICT 11 OFFICE.

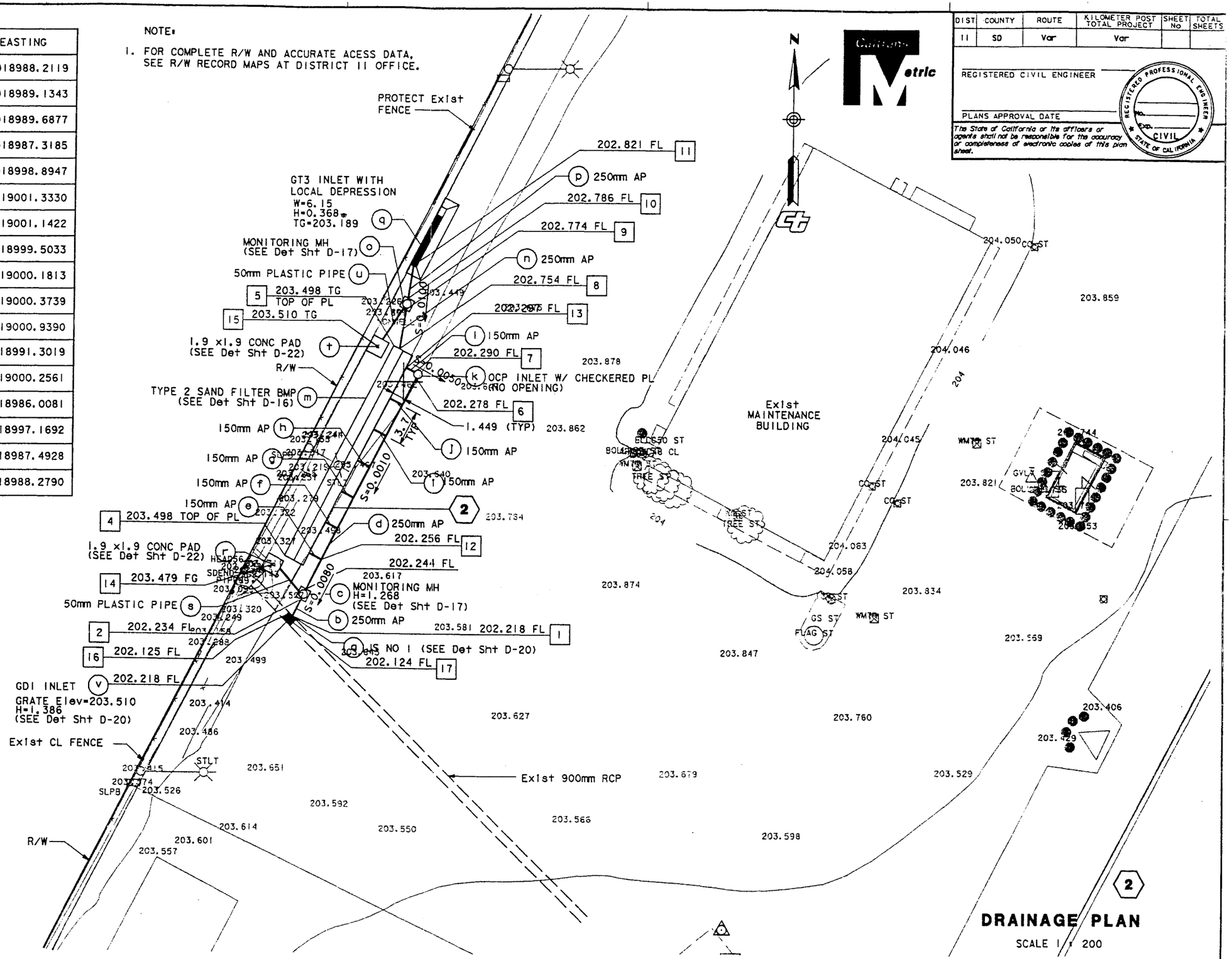

THIS SHEET ACCURATE FOR DRAINAGE ONLY

ESCONDIDO MAINTENANCE STATION (2)

ALL DIMENSIONS ARE IN METERS UNLESS OTHERWISE SHOWN

DRAINAGE PLAN

SCALE 1 : 200

D-2

DATE	REVISED BY	DATE REVISED

CALCULATED/DESIGNED BY

CHECKED BY

PROJECT ENGINEER

STATE OF CALIFORNIA - DEPARTMENT OF TRANSPORTATION

Caltrans

DATE TIME FILE

FOR REDUCED PLANS ORIGINAL 0 20 40 60 80

LAST REVISION

DIST	COUNTY	ROUTE	KILOMETER POST TOTAL PROJECT	SHEET No	TOTAL SHEETS
11	SD	Var	Var		

REGISTERED CIVIL ENGINEER

PLANS APPROVAL DATE

REGISTERED PROFESSIONAL ENGINEER — No. — Exp. — CIVIL — STATE OF CALIFORNIA

The State of California or its officers or agents shall not be responsible for the accuracy or completeness of electronic copies of this plan sheet.

Caltrans Metric

NOTE:

1. FOR COMPLETE R/W AND ACCURATE ACCESS DATA, SEE R/W RECORD MAPS AT DISTRICT 11 OFFICE.

COORDINATE POINT	NORTHING	EASTING
1	612648.1158	1897216.2133
2	612647.9740	1897215.4015
3	612647.4219	1897215.3857
4	612633.1898	1897224.9106
5	612633.0007	1897225.4293
6	612634.1017	1897227.2153
7	612632.4486	1897225.4210
8	612629.1651	1897226.6330
9	612628.0394	1897227.0486
10	612624.4985	1897226.5610
11	612621.9415	1897229.2995
12	612620.2436	1897225.1321
13	612607.9221	1897230.1525
14	612609.2427	1897233.3937
15	612606.4645	1897234.5257
16	612606.8244	1897232.5092
17	612605.3532	1897234.9785
18	612602.5750	1897236.1105
19	612596.1185	1897251.6231
20	612622.8849	1897231.6146
21	612610.5634	1897236.6350
22	612616.1934	1897243.9038
23	612626.1190	1897237.9864

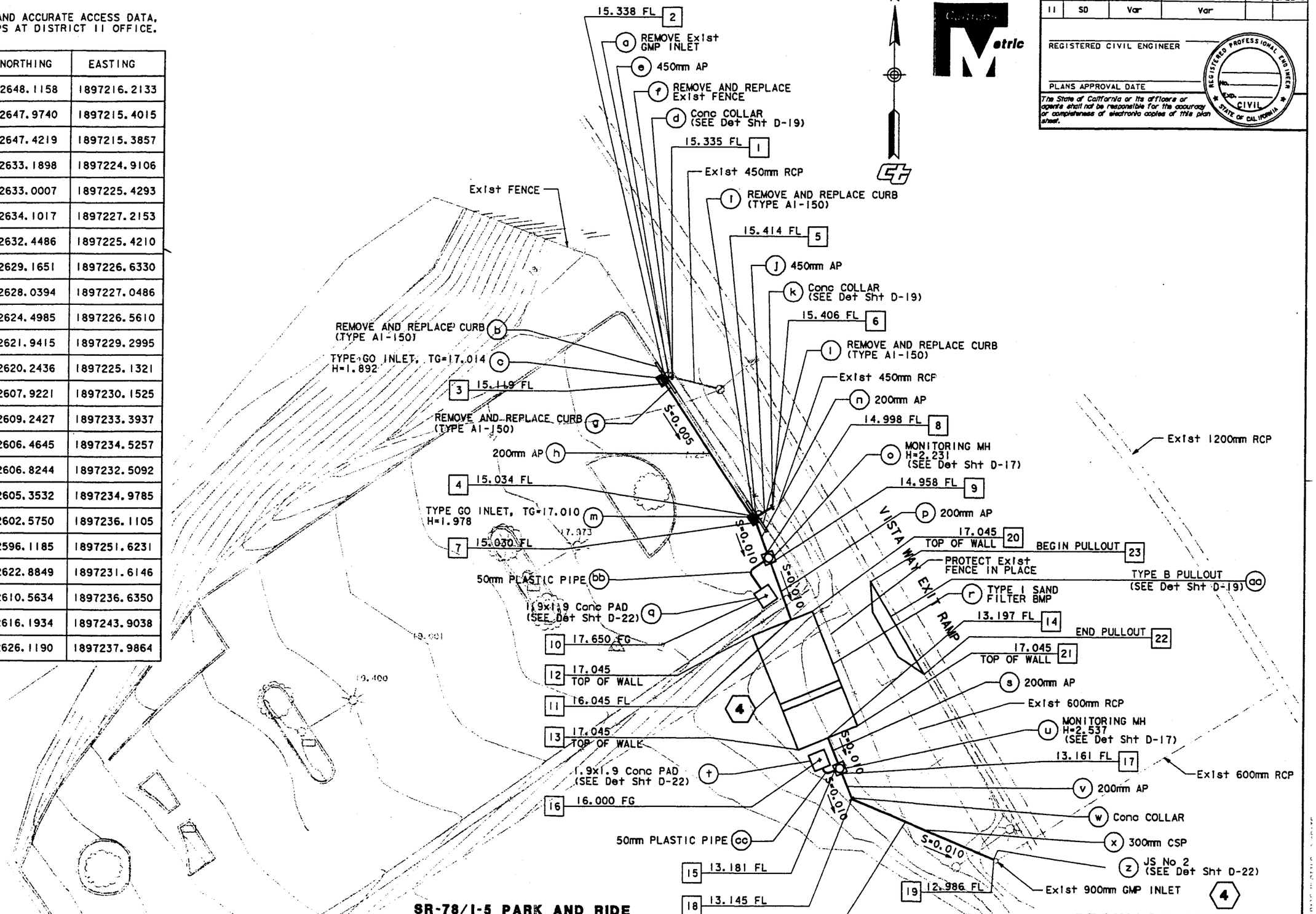

SR-78/I-5 PARK AND RIDE

THIS SHEET ACCURATE FOR DRAINAGE ONLY

ALL DIMENSIONS ARE IN METERS UNLESS OTHERWISE SHOWN

DRAINAGE PLAN

SCALE 1 : 200

D-4

DATE	REVISED BY	DATE REVISED

CALCULATED/DESIGNED BY

CHECKED BY

PROJECT ENGINEER

STATE OF CALIFORNIA - DEPARTMENT OF TRANSPORTATION

Caltrans

15 MAR 98 22:58 q:\57704\34358\dgn\div\d04.div

LAST REVISION

FOR REDUCED PLANS ORIGINAL SCALE IS IN MILLIMETERS 0 20 40 60 80

USERNAME => $USER
DGN FILE => $REQUEST

CU 00000

EA 000000

DIST	COUNTY	ROUTE	KILOMETER POST TOTAL PROJECT	SHEET No	TOTAL SHEETS
11	SD	Var	Var		

REGISTERED CIVIL ENGINEER

PLANS APPROVAL DATE

REGISTERED PROFESSIONAL ENGINEER No. Exp. CIVIL STATE OF CALIFORNIA

The State of California or its officers or agents shall not be responsible for the accuracy or completeness of electronic copies of this plan sheet.

Caltrans Metric

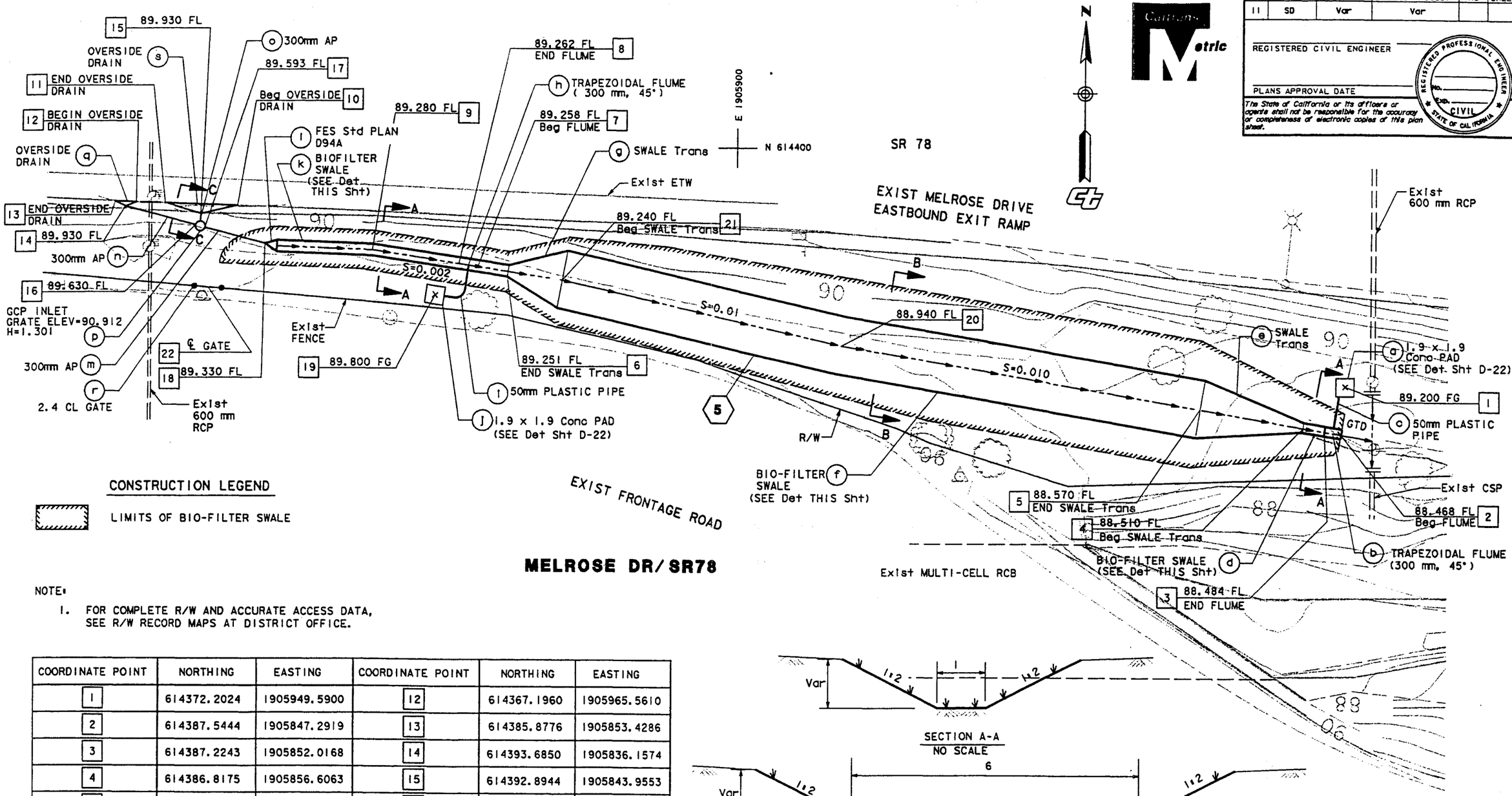

CONSTRUCTION LEGEND

LIMITS OF BIO-FILTER SWALE

MELROSE DR/SR78

NOTE:

1. FOR COMPLETE R/W AND ACCURATE ACCESS DATA, SEE R/W RECORD MAPS AT DISTRICT OFFICE.

COORDINATE POINT	NORTHING	EASTING	COORDINATE POINT	NORTHING	EASTING
1	614372.2024	1905949.5900	12	614367.1960	1905965.5610
2	614387.5444	1905847.2919	13	614385.8776	1905853.4286
3	614387.2243	1905852.0168	14	614393.6850	1905836.1574
4	614386.8175	1905856.6063	15	614392.8944	1905843.9553
5	614384.9952	1905877.6889	16	614391.7512	1905843.4235
6	614382.6087	1905897.4922	17	614391.4940	1905844.3899
7	614377.7792	1905918.4275	18	614389.8509	1905850.5637
8	614373.4770	1905937.9077	19	614384.6214	1905868.2590
9	614371.2590	1905947.7261	20	614379.6084	1905910.8395
10	614370.5588	1905950.8793	21	614386.2290	1905881.5737
11	614368.3919	1905960.6376	22	614385.3290	1905844.7537

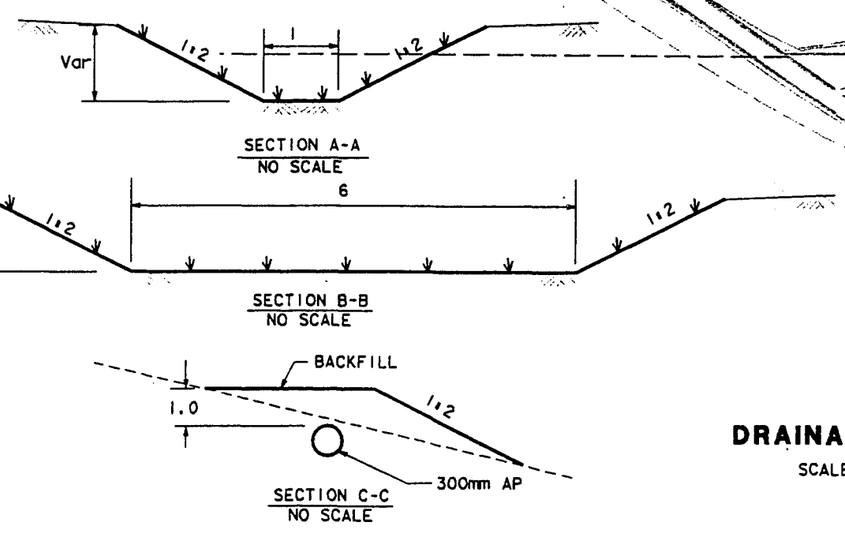

5

DRAINAGE PLAN

SCALE 1 : 200

D-5

THIS PLAN ACCURATE FOR DRAINAGE ONLY

ALL DIMENSIONS SHOWN ARE IN METERS UNLESS OTHERWISE SHOWN

FOR REDUCED PLANS ORIGINAL SCALE IS IN MILLIMETERS 0 20 40 60 80

USERNAME => $USER

15 MAR 98 23: 7 q:\57704\34358\dgn\div\d05.div

STATE OF CALIFORNIA - DEPARTMENT OF TRANSPORTATION

Caltrans

PROJECT ENGINEER

CALCULATED/DESIGNED BY

CHECKED BY

DATE REVISED BY

DATE REVISED

LAST REVISION

NOTE:

1. FOR COMPLETE R/W AND ACCURATE ACCESS DATA, SEE R/W RECORD MAPS AT DISTRICT 11 OFFICE.

COORDINATE POINT	NORTHING	EASTING
1	606994.497	1899671.425
2	607020.582	1899660.241
3	607021.548	1899659.589
4	607011.017	1899665.898
5	607033.343	1899650.809
6	607102.921	1899619.992
7	607119.811	1899609.785
8	607120.797	1899610.255
9	607327.493	1899511.236

COORDINATE POINT	NORTHING	EASTING
10	607498.728	1899418.042
11	607103.125	1899617.130
12	607102.231	1899618.616
13	607304.014	1899652.173
14	607032.720	1899653.029
15	606,964.899	189962.334
16	607013.264	1899668.228
17	607113.059	1899610.455

Caltrans Metric

DIST	COUNTY	ROUTE	KILOMETER POST TOTAL PROJECT	SHEET No	TOTAL SHEETS
11	SD	Var	Var		

REGISTERED CIVIL ENGINEER

PLANS APPROVAL DATE

REGISTERED PROFESSIONAL ENGINEER CIVIL STATE OF CALIFORNIA

The State of California or its officers or agents shall not be responsible for the accuracy or completeness of electronic copies of this plan sheet.

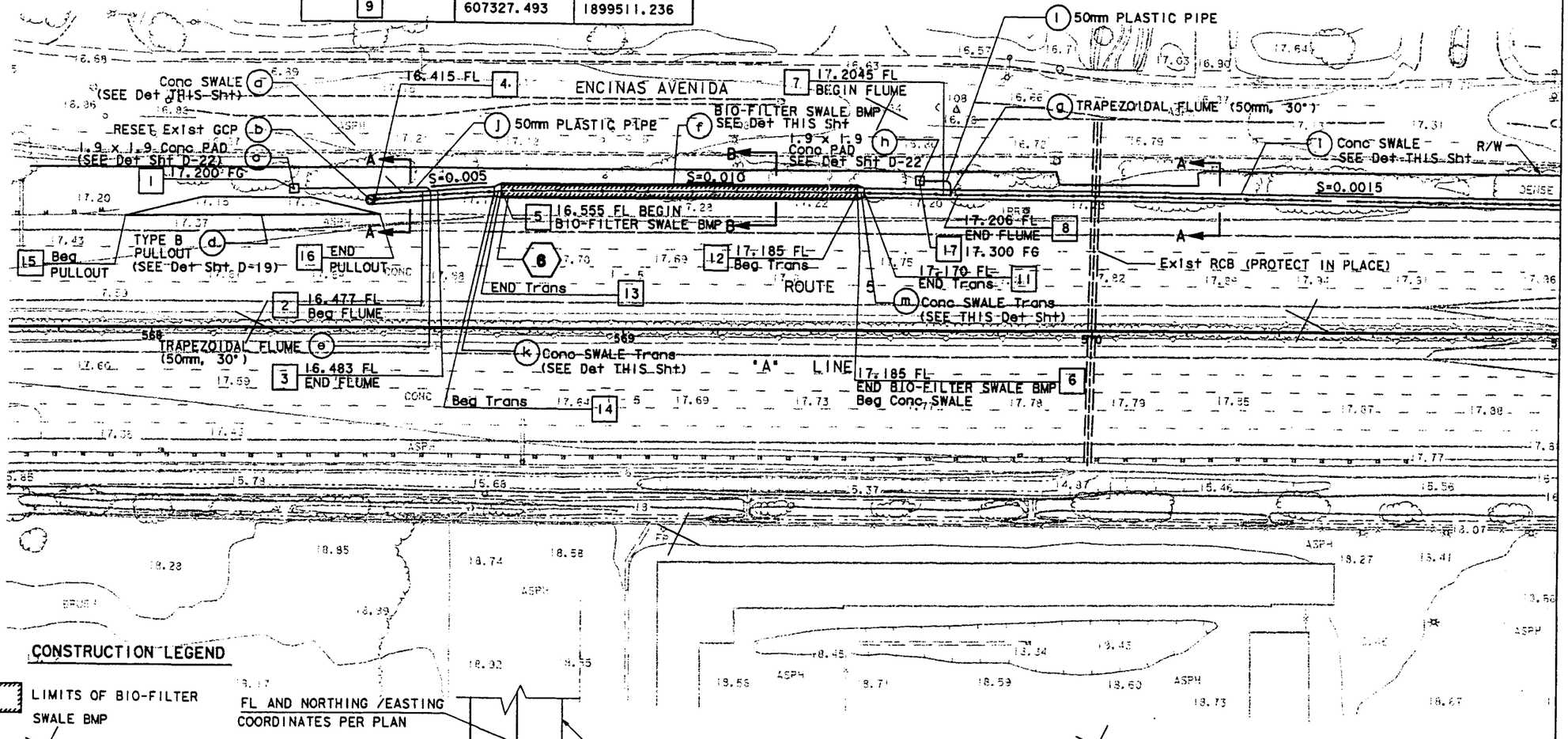

CONSTRUCTION LEGEND

LIMITS OF BIO-FILTER SWALE BMP

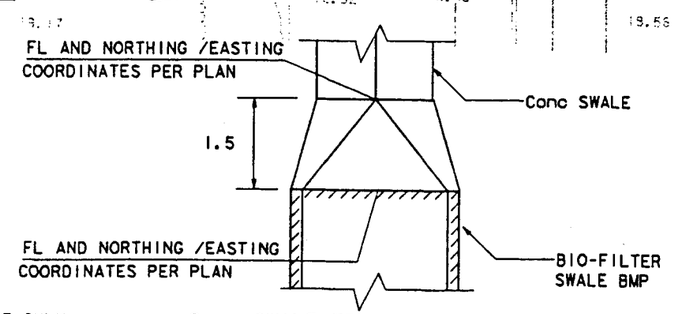

Conc SWALE TRANSITION DETAIL

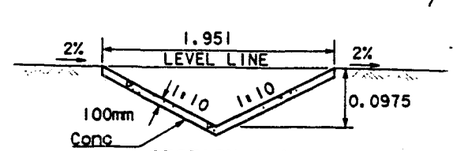

SECTION A-A

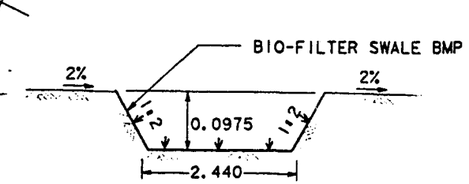

SECTION B-B

THIS SHEET ACCURATE FOR DRAINAGE ONLY

ALL DIMENSIONS SHOWN ARE IN METERS UNLESS OTHERWISE SHOWN

6

DRAINAGE PLAN

SCALE 1 : 500

D-6

DATE	REVISED BY	DATE REVISED

CALCULATED/DESIGNED BY

CHECKED BY

PROJECT ENGINEER

STATE OF CALIFORNIA - DEPARTMENT OF TRANSPORTATION

Caltrans

15 MAR 98 22:...00 q:\57704\34358\dgn\div\d06.div

FOR REDUCED PLANS ORIGINAL SCALE IS IN MILLIMETERS 0 20 40 60 80

USERNAME => $USER

LAST REVISION

DIST	COUNTY	ROUTE	KILOMETER POST TOTAL PROJECT	SHEET No	TOTAL SHEETS
11	SD	Var	Var		

REGISTERED CIVIL ENGINEER

PLANS APPROVAL DATE

The State of California or its officers or agents shall not be responsible for the accuracy or completeness of electronic copies of this plan sheet.

REGISTERED PROFESSIONAL ENGINEER No. Exp. CIVIL STATE OF CALIFORNIA

NOTE:

1. FOR COMPLETE R/W AND ACCURATE ACCESS DATA, SEE R/W RECORD MAPS AT DISTRICT 11 OFFICE.

COORDINATE POINT	NORTHING	EASTING
1	606994.497	1899671.425
2	607020.582	1899660.241
3	607021.548	1899659.589
4	607011.017	1899665.898
5	607033.343	1899650.809
6	607102.921	1899619.992
7	607119.811	1899609.785
8	607120.797	1899610.255
9	607327.493	1899511.236

COORDINATE POINT	NORTHING	EASTING
10	607498.728	1899418.042
11	607103.125	1899617.130
12	607102.231	1899618.616
13	607304.014	1899652.173
14	607032.720	1899653.029
15	606,964.899	189962.334
16	607013.264	1899668.228
17	607113.059	1899610.455

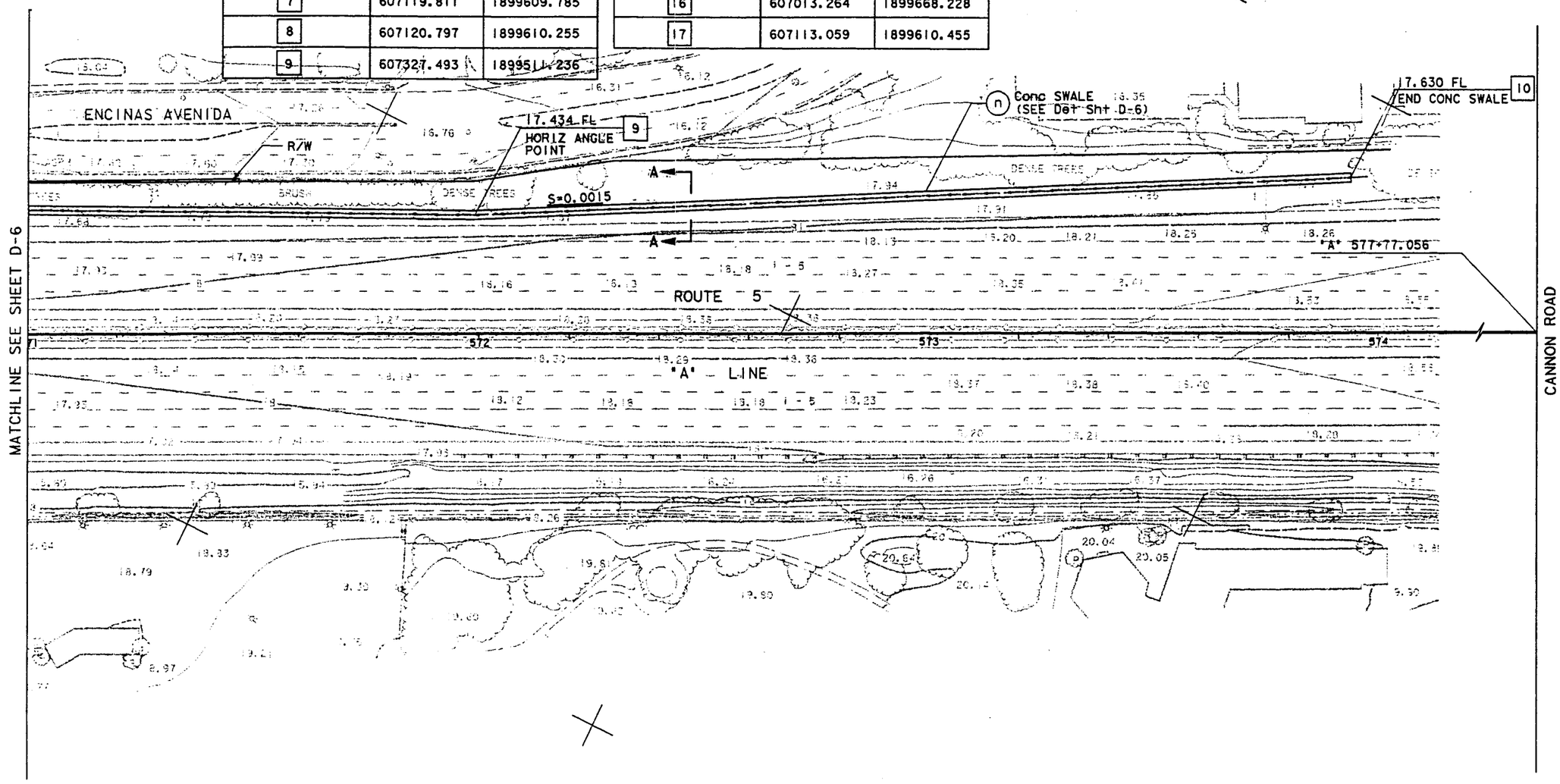

7

DRAINAGE PLAN

SCALE 1 : 500

THIS SHEET ACCURATE FOR DRAINAGE ONLY

ALL DIMENSIONS SHOWN ARE IN METERS UNLESS OTHERWISE SHOWN

D-7

STATE OF CALIFORNIA - DEPARTMENT OF TRANSPORTATION

Caltrans

PROJECT ENGINEER

CALCULATED/DESIGNED BY | CHECKED BY | DATE | REVISED BY | DATE REVISED

15 MAR 98 22:33:18 q:\57704\34358\dgn\div\d07.div

FOR REDUCED PLANS ORIGINAL 0 20 40 60 80

USERNAME => $USER

COORDINATE POINT	NORTHING	EASTING
1	606319.1676	1900283.9389
2	606321.1755	1900305.1004
3	606318.9190	1900308.1167
4	606318.9166	1900309.1398
5	606318.6683	1900332.9690
6	606316.7876	1900310.0991
7	606316.3773	1900357.0723
8	606316.2863	1900357.5924
9	606317.0217	1900359.5917
10	606317.7141	1900360.3884
11	606314.5048	1900364.1111
12	606320.2870	1900363.3490
13	606318.4369	1900361.2201

NOTE:

1. FOR COMPLETE R/W AND ACCURATE ACCESS DATA, SEE R/W RECORD MAPS AT DISTRICT 11 OFFICE.

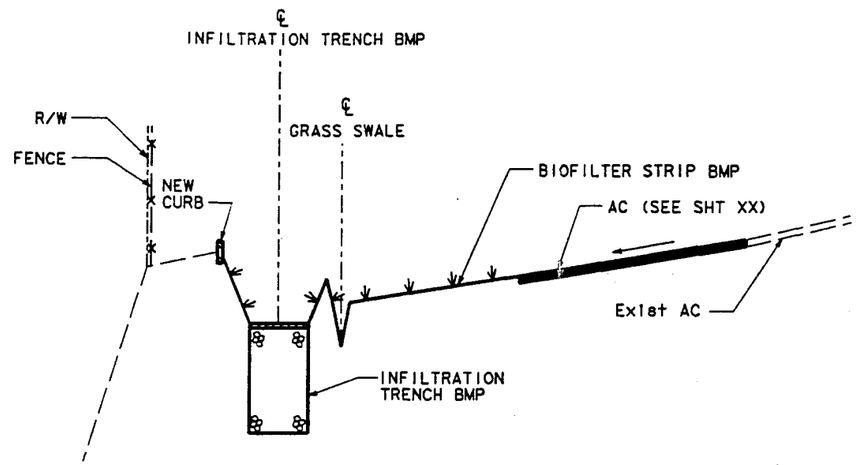

SECTION A-A

SCALE: 1 : 100 Horiz
SCALE: 1 : 20 Vert

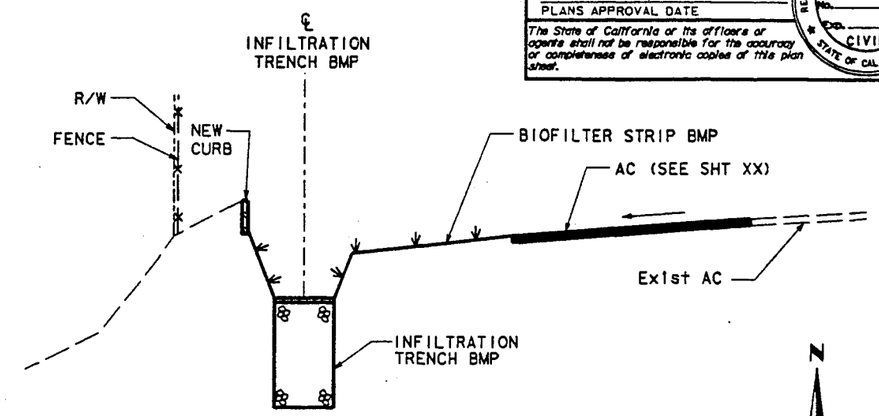

SECTION B-B

SCALE: 1 : 100 Horiz
SCALE: 1 : 20 Vert

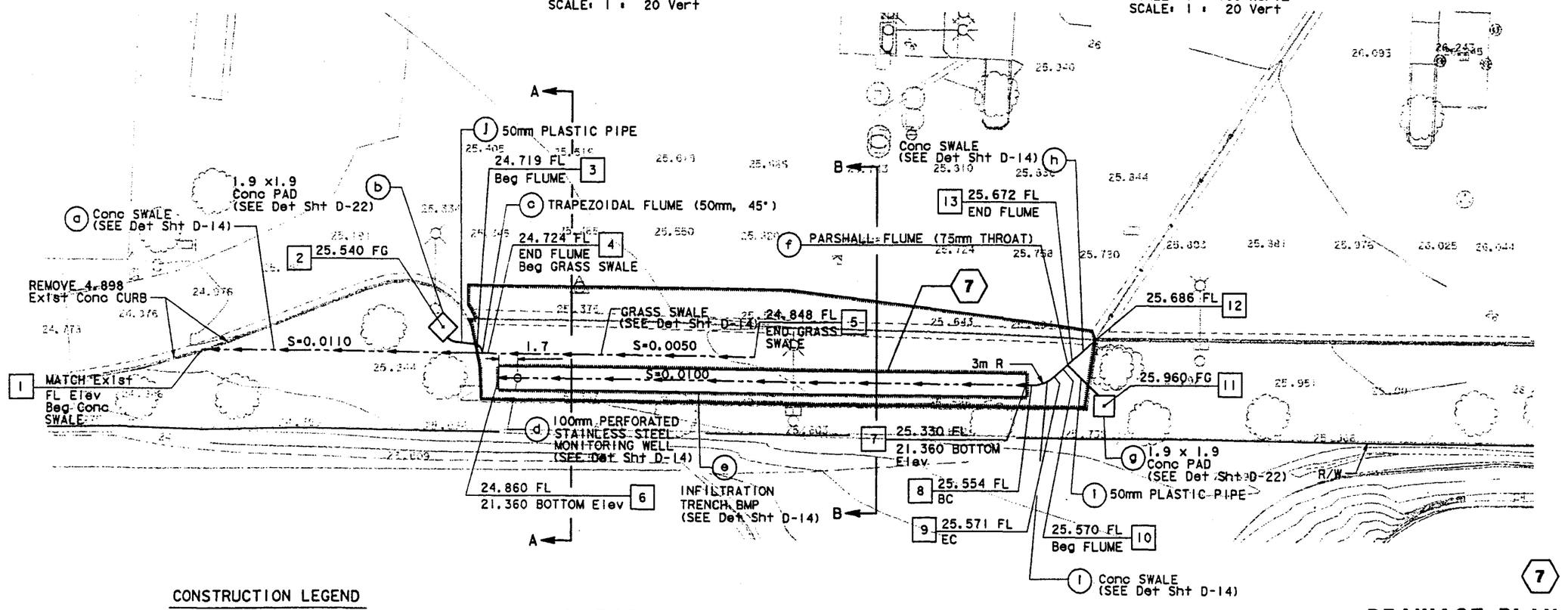

CONSTRUCTION LEGEND

BIO-FILTER STRIP BMP

CARLSBAD MAINTENANCE STATION

DRAINAGE PLAN

SCALE 1 : 200

THIS SHEET ACCURATE FOR DRAINAGE ONLY

ALL DIMENSIONS ARE IN METERS
UNLESS OTHERWISE SHOWN

DIST	COUNTY	ROUTE	KILOMETER POST TOTAL PROJECT	SHEET No	TOTAL SHEETS
11	SD	Var	Var		

REGISTERED CIVIL ENGINEER

PLANS APPROVAL DATE

The State of California or its officers or agents shall not be responsible for the accuracy or completeness of electronic copies of this plan sheet.

REGISTERED PROFESSIONAL ENGINEER CIVIL STATE OF CALIFORNIA

Caltrans Metric

DATE	REVISED BY	DATE REVISED

CALCULATED/DESIGNED BY

CHECKED BY

PROJECT ENGINEER

STATE OF CALIFORNIA - DEPARTMENT OF TRANSPORTATION

Caltrans

15 MAR 98 23:0. .4 q:\57704\34358\dgn\dlvvd08.dlv

FOR REDUCED PLANS ORIGINAL 0 20 40 60 80

USERNAME => $USER

LAST REVISION

D-8

DIST	COUNTY	ROUTE	KILOMETER POST TOTAL PROJECT	SHEET No	TOTAL SHEETS
11	SD	Var	Var		

REGISTERED CIVIL ENGINEER

PLANS APPROVAL DATE

The State of California or its officers or agents shall not be responsible for the accuracy or completeness of electronic copies of this plan sheet.

REGISTERED PROFESSIONAL ENGINEER — No. — Exp. — CIVIL — STATE OF CALIFORNIA

NOTES:

1. ALL STORMFILTERS REQUIRE REGULAR MAINTENANCE. REFER TO OPERATION AND MAINTENANCE MANUAL FOR DETAILS.
2. PRECAST CONCRETE VAULT CONSTRUCTED IN ACCORDANCE WITH ASTM C858.
3. FLEXIBLE COUPLINGS TO BE SET 0.457m OUTSIDE FACE OF WALL TO BE APPROVED BY RESIDENT ENGINEER.
4. SEE PRECAST STORMFILTER DATA SHEET FOR VAULT DIMENSIONS, ELEVATIONS AND NUMBER OF CARTRIDGES.

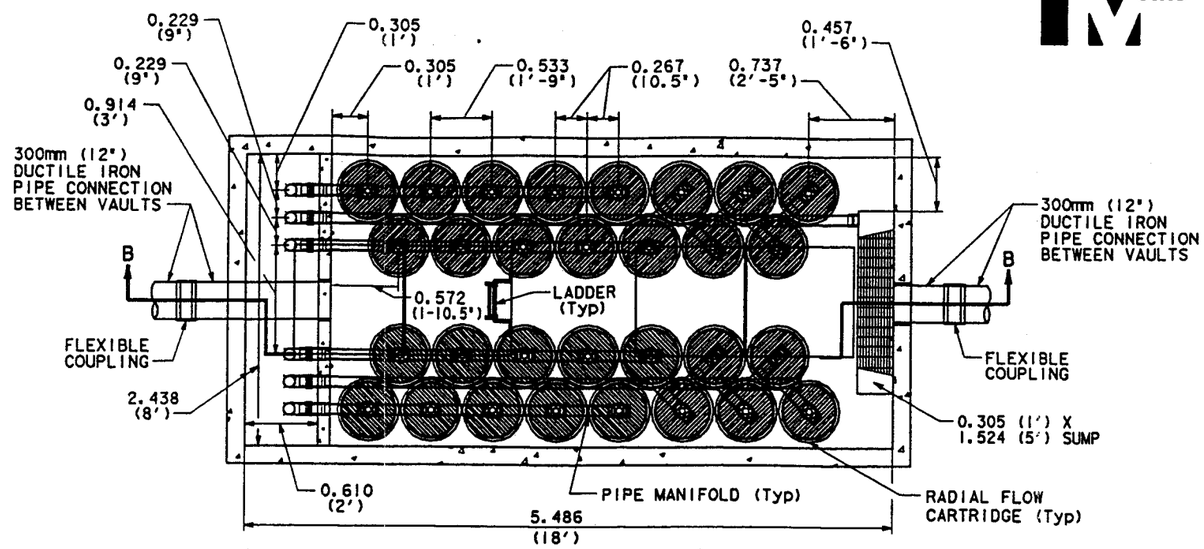

VAULT NO 2

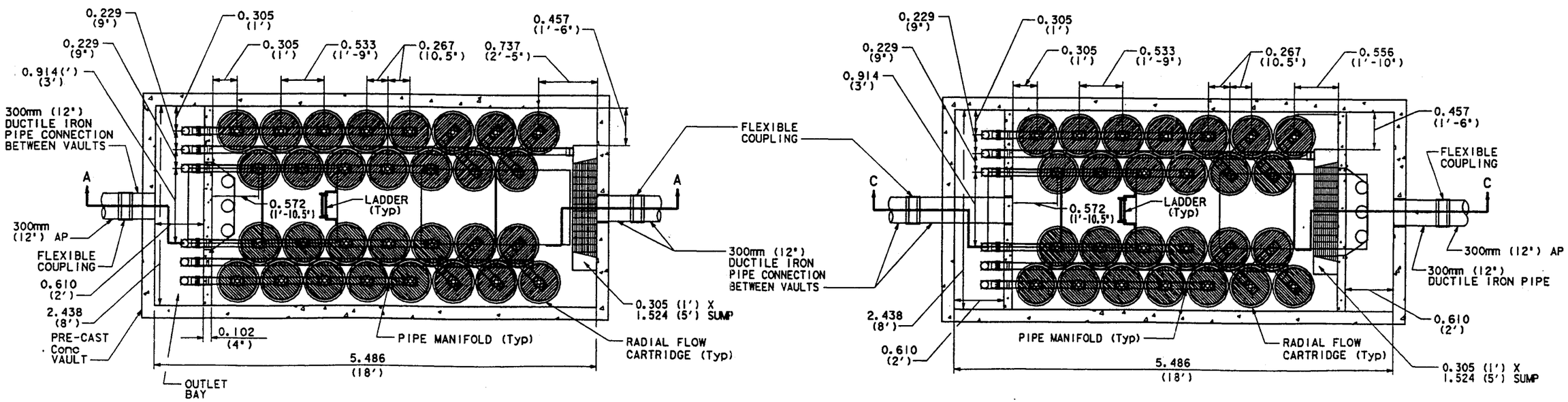

VAULT NO 1

VAULT NO 3

PLAN

1

DRAINAGE DETAILS

NO SCALE

COMPOST FILTER BMP

NO SCALE

D-9

SEE Sht D-10 FOR CROSS SECTIONS

ALL DIMENSIONS ARE IN METERS UNLESS OTHERWISE SHOWN

STATE OF CALIFORNIA - DEPARTMENT OF TRANSPORTATION

Caltrans

PROJECT ENGINEER

CALCULATED/DESIGNED BY | CHECKED BY | DATE | REVISED BY | DATE REVISED

FOR REDUCED PLANS ORIGINAL SCALE IS IN MILLIMETERS 0 20 40 60 80

USERNAME => $USER

DIST	COUNTY	ROUTE	KILOMETER POST TOTAL PROJECT	SHEET No.	TOTAL SHEETS
11	SD	Var	Var		

REGISTERED CIVIL ENGINEER

PLANS APPROVAL DATE

REGISTERED PROFESSIONAL ENGINEER No. Exp. CIVIL STATE OF CALIFORNIA

The State of California or its officers or agents shall not be responsible for the accuracy or completeness of electronic copies of this plan sheet.

Caltrans Metric

NOTE:

SEE D-9 FOR LAYOUT PLAN

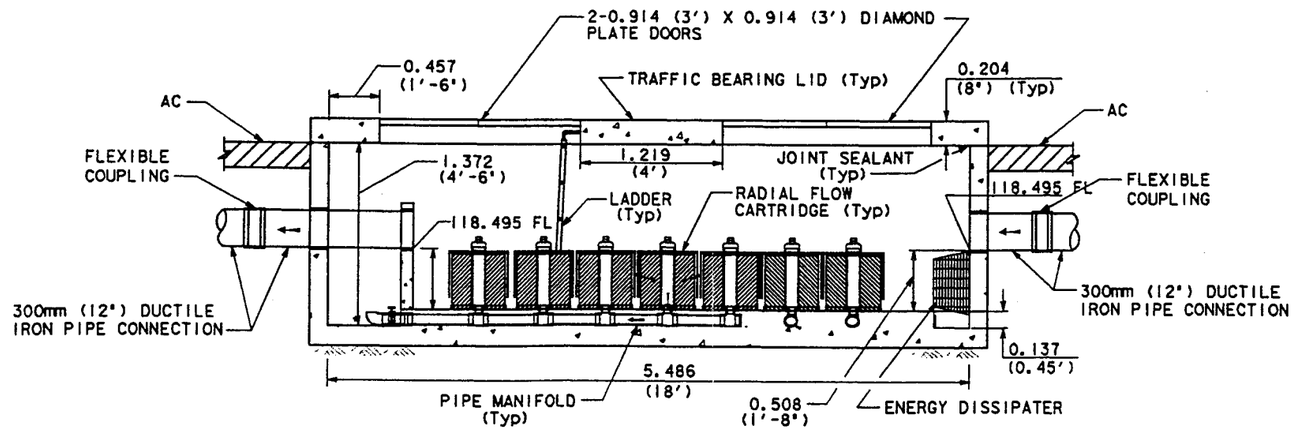

SECTION B-B
VAULT NO 2

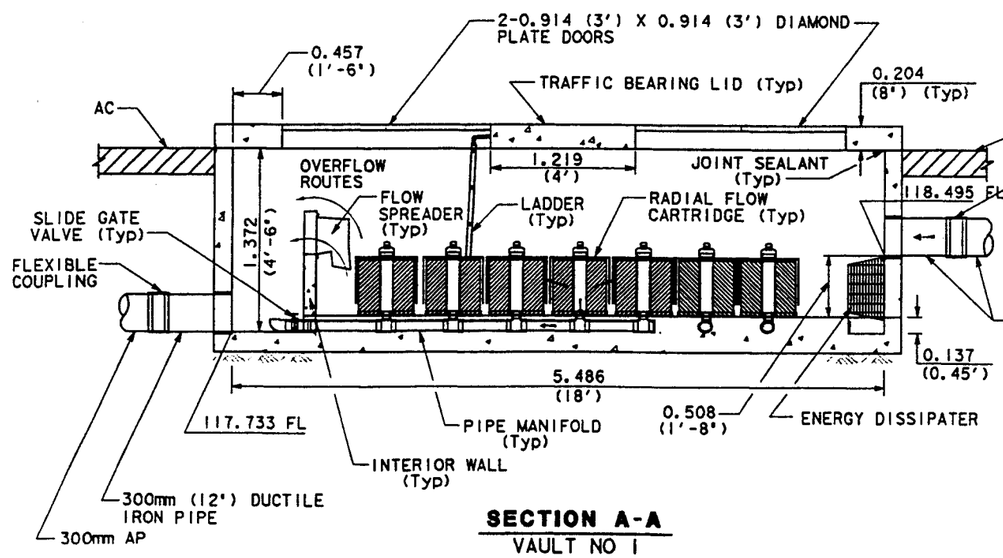

SECTION A-A
VAULT NO 1

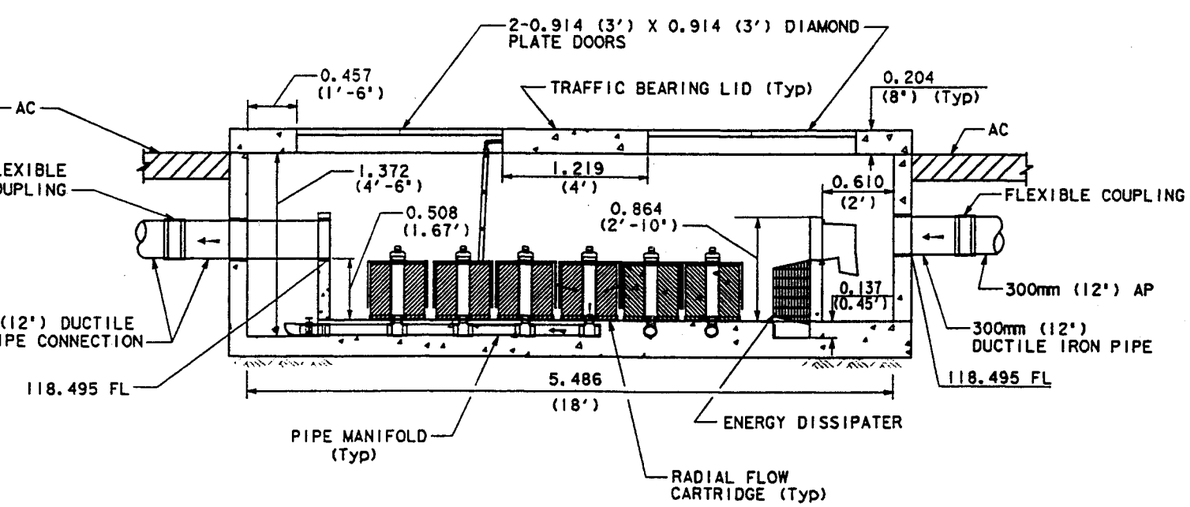

SECTION C-C
VAULT NO 3

(1)

DRAINAGE DETAILS

NO SCALE

ALL DIMENSIONS ARE IN METERS
UNLESS OTHERWISE SHOWN

D-10

REVISED BY | DATE REVISED | DATE | CALCULATED/DESIGNED BY | CHECKED BY | PROJECT ENGINEER

STATE OF CALIFORNIA - DEPARTMENT OF TRANSPORTATION

Caltrans

FOR REDUCED PLANS ORIGINAL 0 20 40 60 80

DIST	COUNTY	ROUTE	KILOMETER POST TOTAL PROJECT	SHEET No	TOTAL SHEETS
11	SD	Var	Var		

REGISTERED CIVIL ENGINEER

PLANS APPROVAL DATE

REGISTERED PROFESSIONAL ENGINEER — No. — Exp. — CIVIL — STATE OF CALIFORNIA

The State of California or its officers or agents shall not be responsible for the accuracy or completeness of electronic copies of this plan sheet.

Caltrans Metric

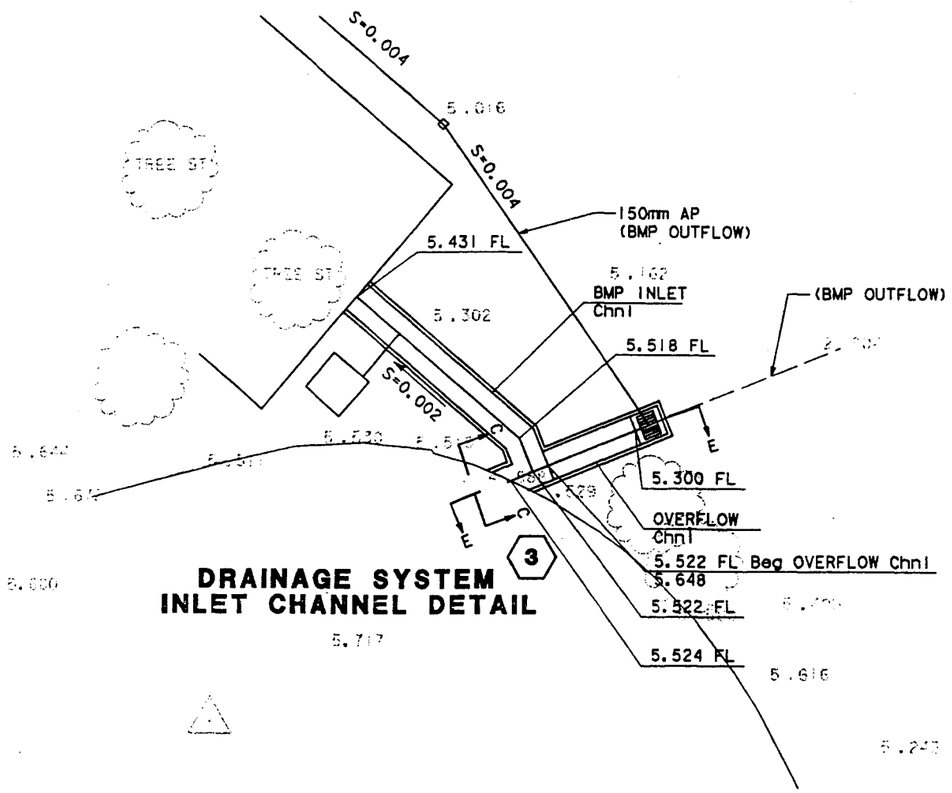

DRAINAGE SYSTEM
INLET CHANNEL DETAIL

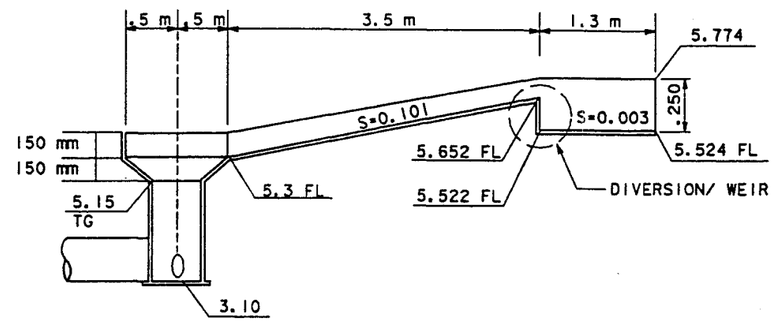

SECTION E-E
NO SCALE

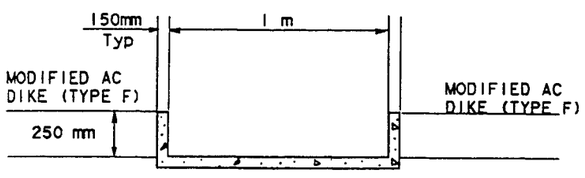

SECTION C-C

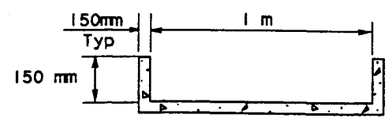

BMP INLET CHANNEL

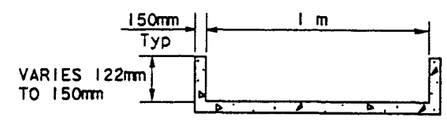

OVERFLOW CHANNEL

CONCRETE SWALE

3

DRAINAGE DETAILS
NO SCALE

D-11

DATE	REVISED BY	DATE REVISED
CALCULATED/ DESIGNED BY		
CHECKED BY		
PROJECT ENGINEER		

STATE OF CALIFORNIA - DEPARTMENT OF TRANSPORTATION

Caltrans

16 MAR 98 00:34 p:\57704\34358\dgn\div\d11.div

LAST REVISION 00-00-00 | DATE PLOTTED => @DATE | TIME PLOTTED => @TIME

DIST	COUNTY	ROUTE	KILOMETER POST TOTAL PROJECT	SHEET No	TOTAL SHEETS
11	SD	Var	Var		

REGISTERED CIVIL ENGINEER

PLANS APPROVAL DATE

REGISTERED PROFESSIONAL ENGINEER — CIVIL — STATE OF CALIFORNIA

The State of California or its officers or agents shall not be responsible for the accuracy or completeness of electronic copies of this plan sheet.

Caltrans Metric

CONSTRUCTION LEGEND

RECONSTRUCT 75 mm AC (TYPE B) / 150 mm AB

CURVE DATA

CURVE	R	Δ	T	L
1	55.579m	16°00'08"	7.821m	15.523m
2	22.148m	36°26'30"	7.077m	13.700m
3	16.203m	40°22'12"	5.957m	11.416m

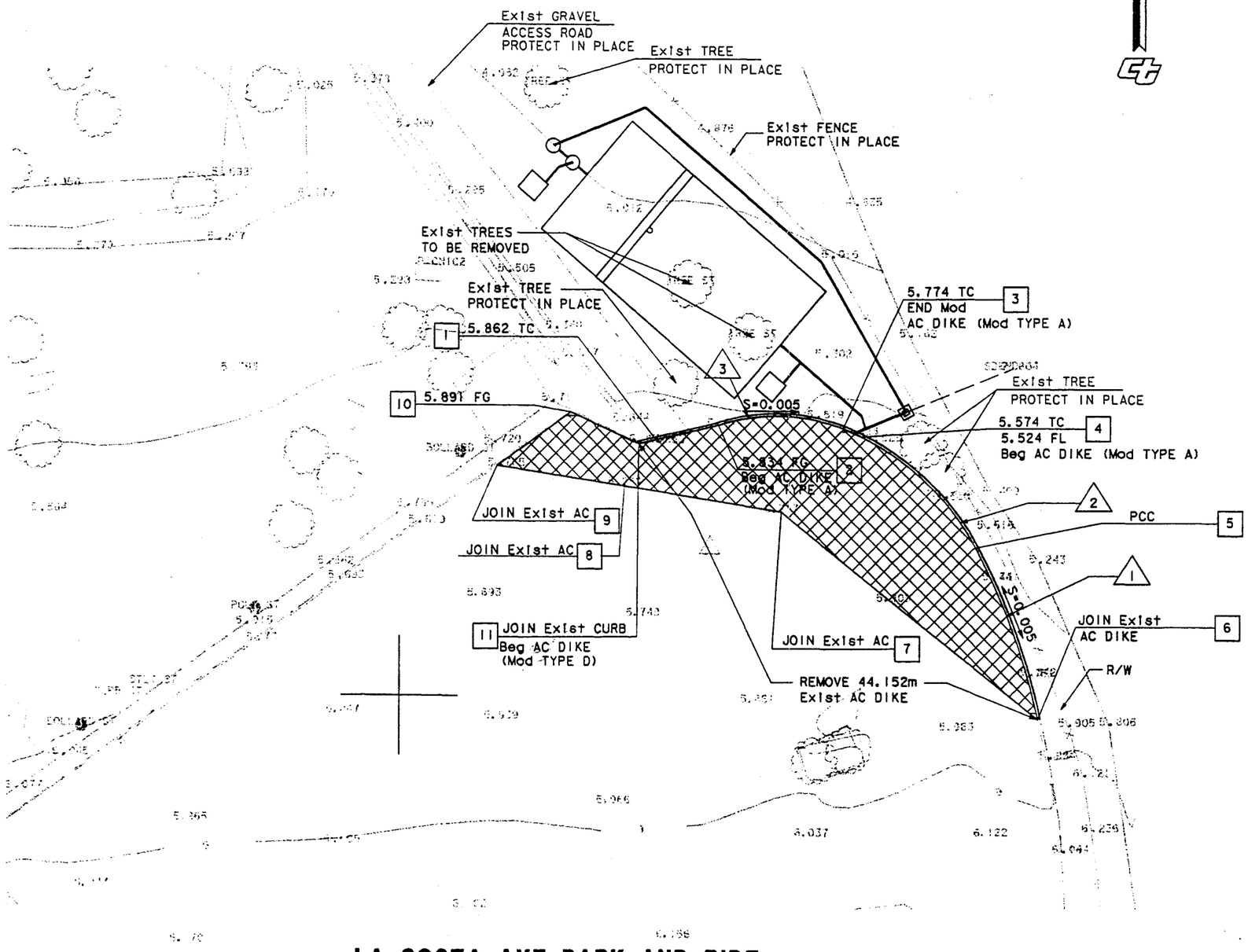

COORDINATE POINT	NORTHING	EASTING
1	602421.3816	1902221.7990
2	602422.8187	1902227.2159
3	602422.5308	1902238.3937
4	602421.9652	1902239.6575
5	602412.5964	1902249.3535
6	602398.0887	1902254.7313
7	602415.5793	1902232.7567
8	602417.8398	1902219.2692
9	602419.4007	1902208.3546
10	602423.9504	1902214.6137
11	602421.2681	1902220.4984

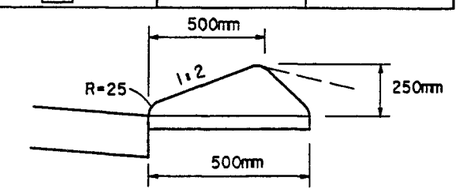

Mod TYPE D DIKE
NO SCALE

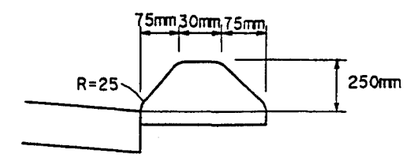

Mod TYPE A DIKE
NO SCALE

3

DRAINAGE DETAILS

SCALE 1 : 200

LA COSTA AVE PARK AND RIDE

D-12

DATE	REVISED BY	DATE REVISED

CALCULATED/DESIGNED BY

CHECKED BY

PROJECT ENGINEER

STATE OF CALIFORNIA - DEPARTMENT OF TRANSPORTATION

Caltrans

DATE TIME FILE

FOR REDUCED PLANS ORIGINAL 0 20 40 60 80

NOTE:

1. FOR COMPLETE R/W AND ACCURATE ACCESS DATA, SEE R/W RECORD MAPS AT DISTRICT 11 OFFICE.

DIST	COUNTY	ROUTE	KILOMETER POST TOTAL PROJECT	SHEET No	TOTAL SHEETS
11	SD	Var	Var		

REGISTERED CIVIL ENGINEER

PLANS APPROVAL DATE

The State of California or its officers or agents shall not be responsible for the accuracy or completeness of electronic copies of this plan sheet.

REGISTERED PROFESSIONAL ENGINEER No. Exp. CIVIL STATE OF CALIFORNIA

Caltrans Metric

CONSTRUCTION LEGEND

- RECONSTRUCT 75mm AC (TYPE B) / 150mm AB
- REMOVE AC AND Conc GUTTER
- REMOVE AC DIKE AND CONSTRUCT CURB (TYPE A1-120)
- 75 mm AC (TYPE B) / 150 mm AB (Cl 2)

COORDINATE POINT	NORTHING	EASTING	COORDINATE POINT	NORTHING	EASTING
1	606332.6305	1900307.3964	14	606317.6447	1900308.1657
2	606330.8703	1900367.3812	15	606371.6599	1900288.6320
3	606324.9395	1900307.3152	16	606365.8640	1900285.1780
4	606321.9198	1900307.0653	17	606359.9466	1900280.5087
5	606320.2397	1900307.6566	18	606331.7168	1900279.4348
6	606324.8344	1900317.2659	19	606326.9115	1900283.6505
7	606324.7283	1900327.3141	20	606332.3350	1900295.2740
8	606324.4967	1900337.3123	21	606337.8350	1900301.0640
9	606323.1806	1900347.2989	22	606336.8140	1900297.4900
10	606321.8780	1900357.2857	23	606371.8790	1900302.7880
11	606320.2200	1900363.5320	24	606371.7940	1900297.2980
12	606314.1170	1900362.5450	25	606331.6276	1900283.8612
13	606314.6650	1900308.2900	-	-	-

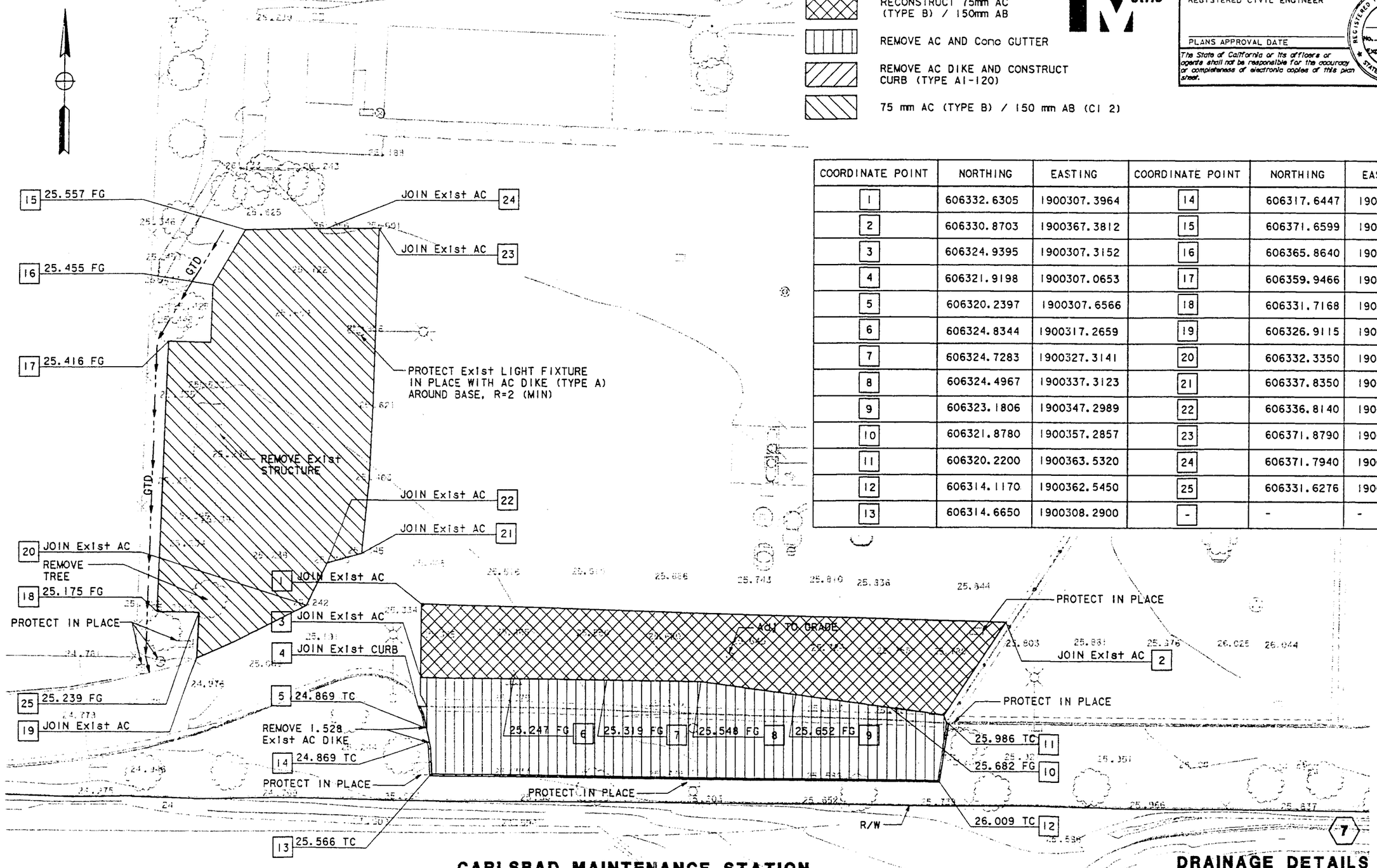

CARLSBAD MAINTENANCE STATION

DRAINAGE DETAILS

SCALE 1 : 200

THIS PLAN ACCURATE FOR DRAINAGE ONLY

ALL DIMENSIONS ARE IN METERS UNLESS OTHERWISE SHOWN

D-13

REVISED BY | DATE REVISED | DATE | CALCULATED/DESIGNED BY | CHECKED BY | PROJECT ENGINEER

STATE OF CALIFORNIA - DEPARTMENT OF TRANSPORTATION

Caltrans

15 MAR 98 23:01:26 q:\57704\34358\dgn\div\d13.div

FOR REDUCED PLANS ORIGINAL SCALE IS IN MILLIMETERS 0 20 40 60 80

USERNAME => $USER

DIST	COUNTY	ROUTE	KILOMETER POST TOTAL PROJECT	SHEET No	TOTAL SHEETS
11	SD	Var	Var		

REGISTERED CIVIL ENGINEER

PLANS APPROVAL DATE

REGISTERED PROFESSIONAL ENGINEER No. CIVIL STATE OF CALIFORNIA

The State of California or its officers or agents shall not be responsible for the accuracy or completeness of electronic copies of this plan sheet.

Caltrans Metric

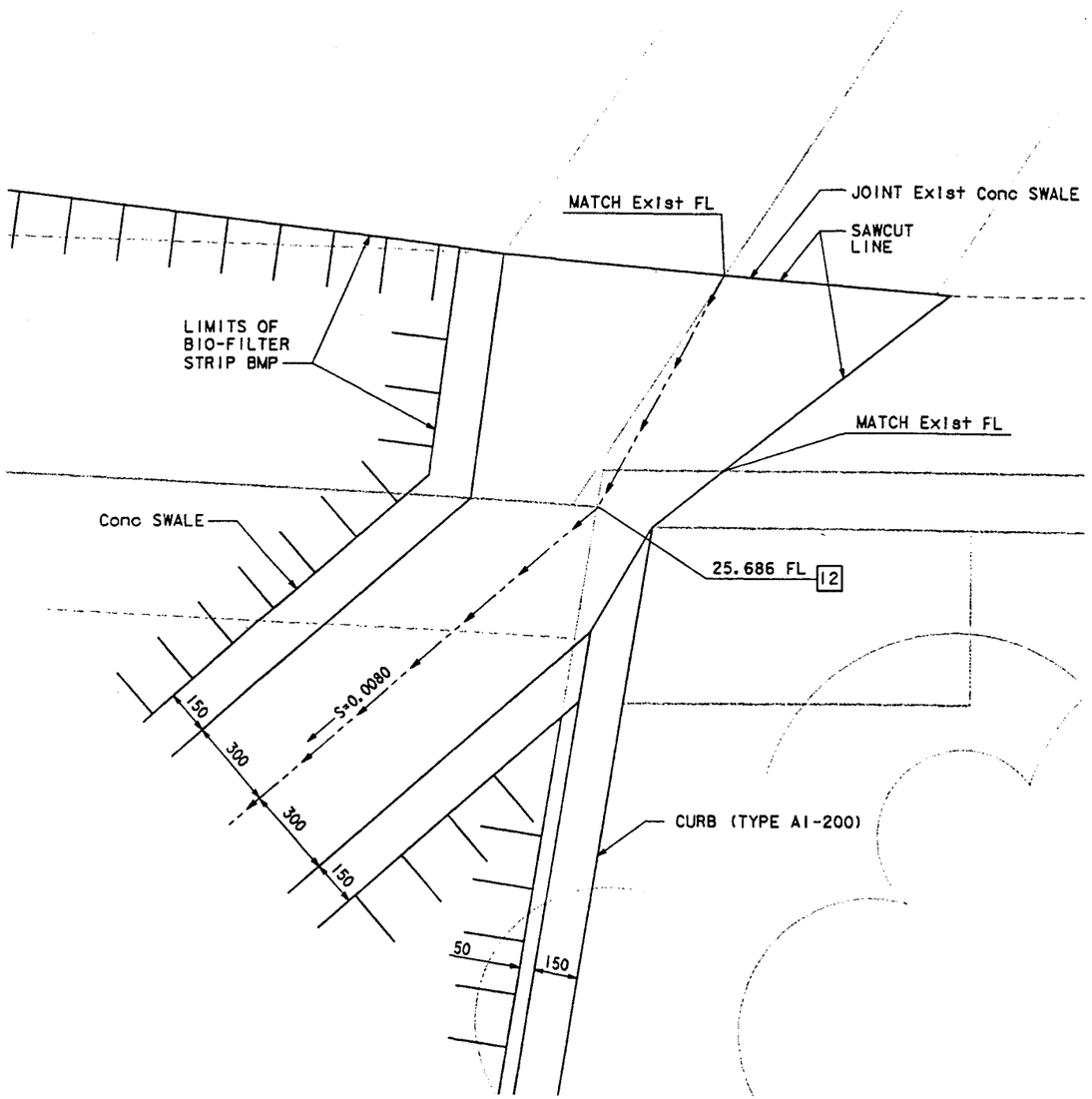

CONCRETE INLET SWALE DETAIL

SCALE: 1:10

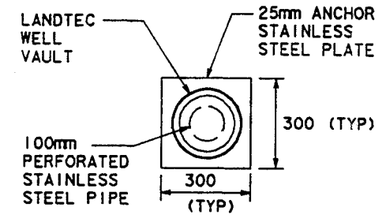

PLAN

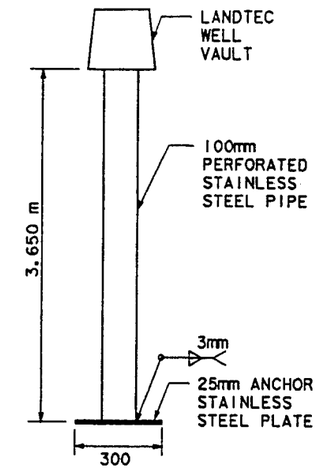

ELEVATION

OUTFLOW MONITORING WELL DETAIL

NO SCALE

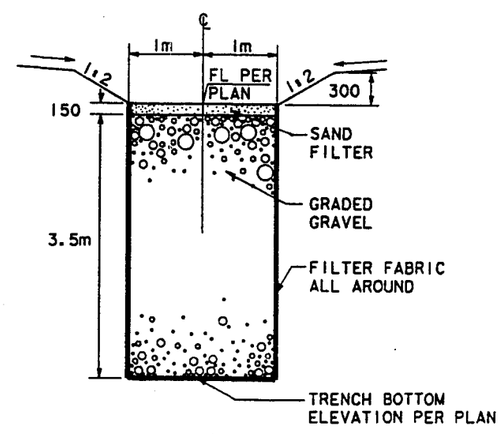

INFILTRATION TRENCH BMP DETAIL

NO SCALE

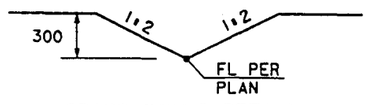

GRASS SWALE DETAIL

SCALE: 1:20

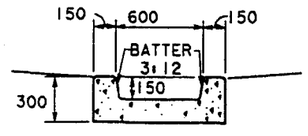

CONCRETE SWALE

SCALE: 1:20

7

DRAINAGE DETAILS

SCALE AS SHOWN

ALL DIMENSIONS ARE IN MILLIMETERS UNLESS OTHERWISE SHOWN

D-14

DATE	REVISED BY	DATE REVISED

CALCULATED/DESIGNED BY

CHECKED BY

PROJECT ENGINEER

STATE OF CALIFORNIA - DEPARTMENT OF TRANSPORTATION

Caltrans

15 MAR 98 22:1. .3 q:\57704\34358\dgn\div\d14.div

FOR REDUCED PLANS ORIGINAL SCALE IS IN MILLIMETERS 0 20 40 60 80

USERNAME => $USER

LAST REVISION

DIST	COUNTY	ROUTE	KILOMETER POST TOTAL PROJECT	SHEET No	TOTAL SHEETS
11	SD	Var	Var		

REGISTERED CIVIL ENGINEER

PLANS APPROVAL DATE

REGISTERED PROFESSIONAL ENGINEER CIVIL STATE OF CALIFORNIA

The State of California or its officers or agents shall not be responsible for the accuracy or completeness of electronic copies of this plan sheet.

Caltrans Metric

DIMENSION TABLE

No	D_1	D_2	D_3	L	L_1	L_2	L_3	T_1	T_2	W_1	INLET TYPE
3	1.763	1.778	2.623	21.240	15	6	0.240	SEE STD PLAN B3-1	0.412	3.657	WEIR
4	3.000	3.008	3.848	12.740	8	4.5	0.240	SEE STD PLAN B3-1	0.412	2.134	PIPE

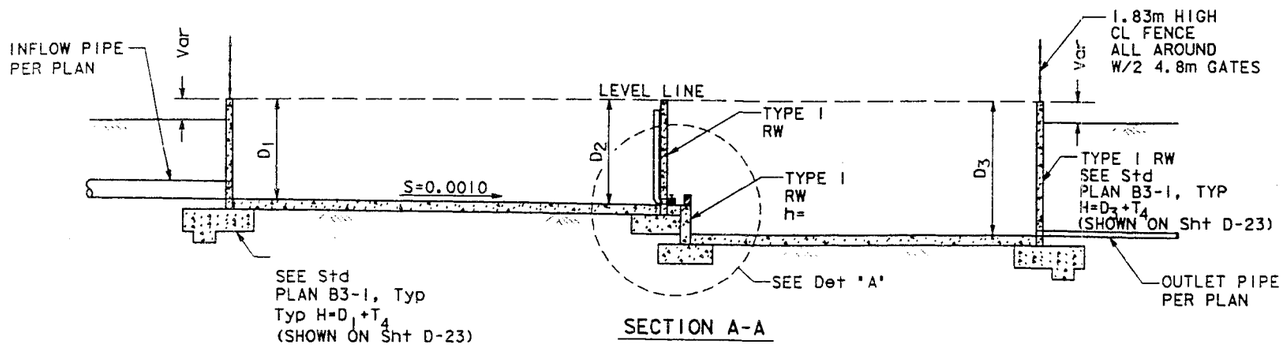

SECTION A-A

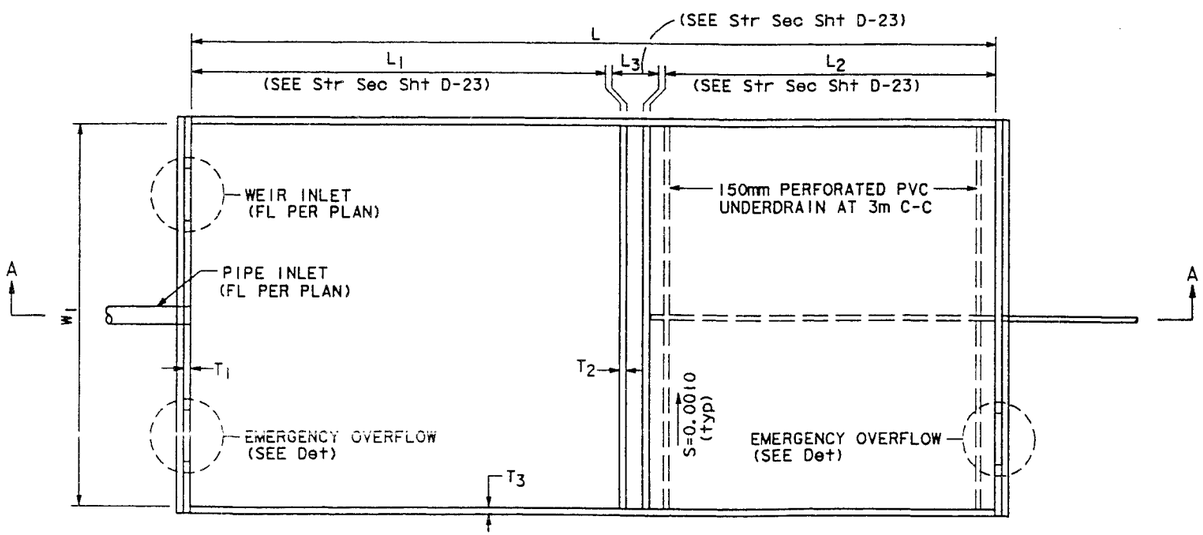

TYPE I SAND FILTER BMP

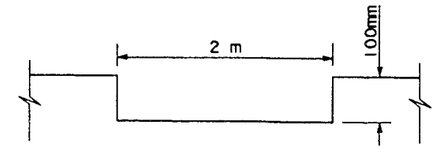

EMERGENCY OVERFLOW

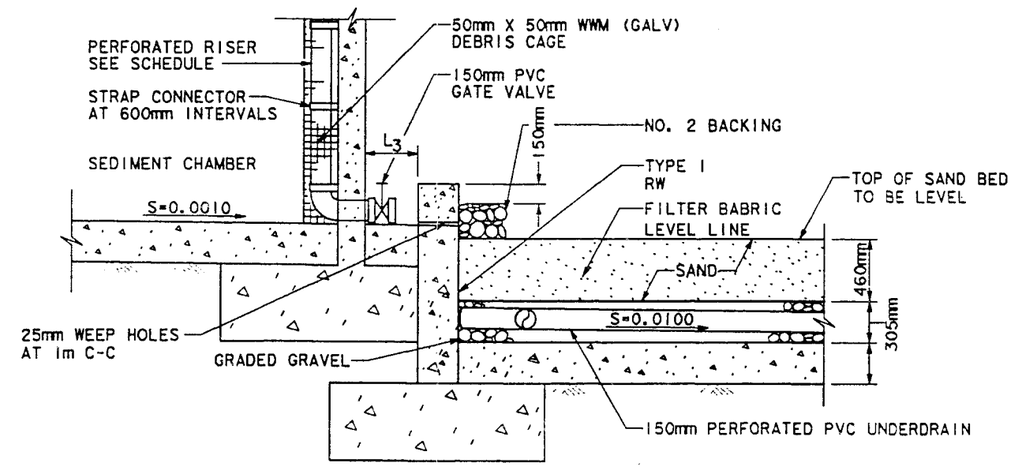

DETAIL 'A'

PERFORATED RISER SCHEDULE	
PIPE Dia	150 mm
Vert HOLE SPACING	64 mm
PERFORATIONS PER ROW	9
Dia OF PERFORATION	25 mm

3 4

DRAINAGE DETAILS

NO SCALE

D-15

DATE	REVISED BY	DATE REVISED

CALCULATED/DESIGNED BY

CHECKED BY

PROJECT ENGINEER

STATE OF CALIFORNIA - DEPARTMENT OF TRANSPORTATION

Caltrans

DATE TIME FILE

FOR REDUCED PLANS ORIGINAL SCALE IS IN MILLIMETERS 0 20 40 60 80

USERNAME => USER

LAST REVISION

DIST	COUNTY	ROUTE	KILOMETER POST TOTAL PROJECT	SHEET No	TOTAL SHEETS
11	SD	Var	Var		

REGISTERED CIVIL ENGINEER

PLANS APPROVAL DATE

REGISTERED PROFESSIONAL ENGINEER NO. EXP. CIVIL STATE OF CALIFORNIA

The State of California or its officers or agents shall not be responsible for the accuracy or completeness of electronic copies of this plan sheet.

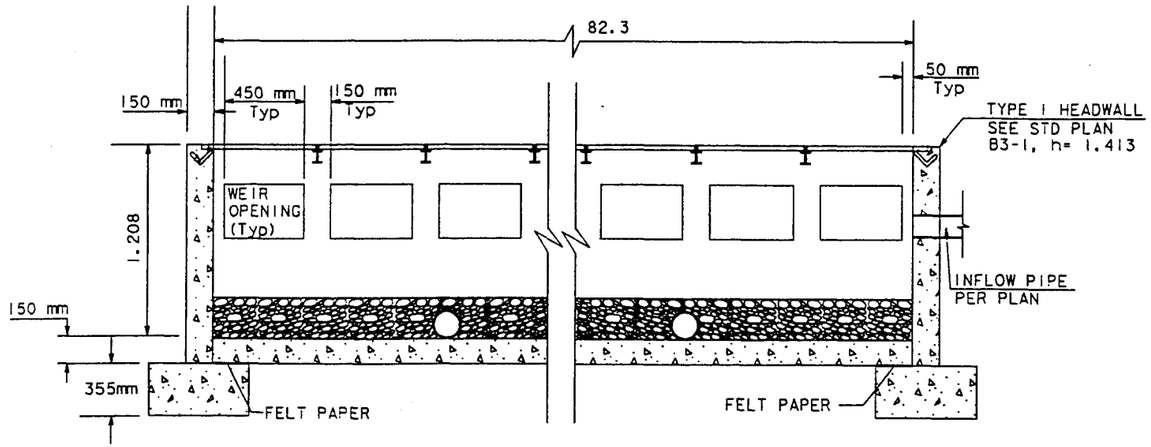

SECTION A-A

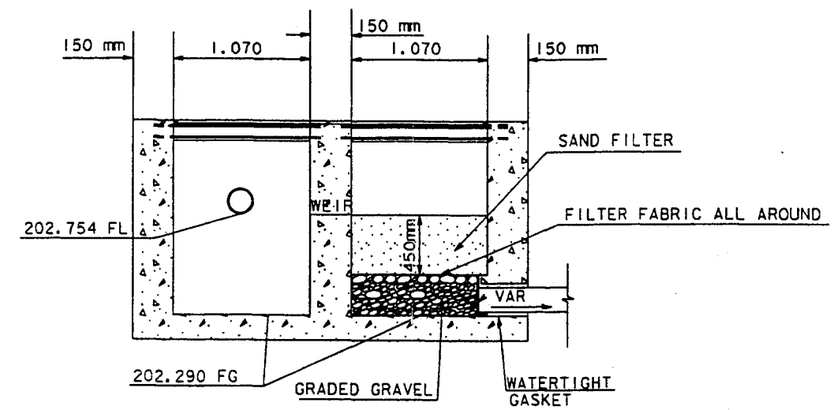

SECTION B-B

NOTE:

PLACE HINGED SIDE AT INSIDE WALL

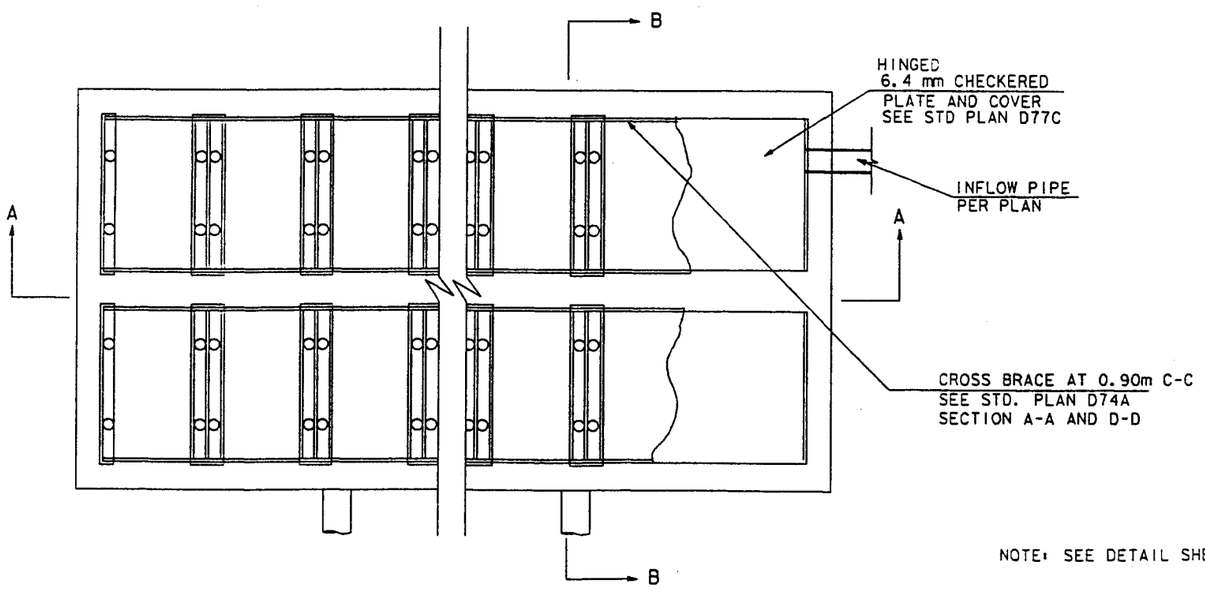

PLAN

NOTE: SEE DETAIL SHEET D-23 FOR SIDE WALL REINFORCING AND JOINT DETAILS

(2)

DRAINAGE DETAILS

NO SCALE

TYPE II SAND FILTER BMP

ALL DIMENSIONS ARE IN METERS
UNLESS OTHERWISE SHOWN

D-16

REVISED BY | DATE REVISED | DATE | CALCULATED/DESIGNED BY | CHECKED BY | PROJECT ENGINEER

STATE OF CALIFORNIA - DEPARTMENT OF TRANSPORTATION

Caltrans

6 MAR 98 01:09: \57704\34358\dgn\div\di6.div

DATE PLOTTED => @DATE
TIME PLOTTED => @TIME

LAST REVISION 00-00-00

DIST	COUNTY	ROUTE	KILOMETER POST TOTAL PROJECT	SHEET No	TOTAL SHEETS
11	SD	Var	Var		

REGISTERED CIVIL ENGINEER

PLANS APPROVAL DATE

REGISTERED PROFESSIONAL ENGINEER CIVIL STATE OF CALIFORNIA

The State of California or its officers or agents shall not be responsible for the accuracy or completeness of electronic copies of this plan sheet.

ALL DIMENSIONS ARE IN MILLIMETERS UNLESS OTHERWISE SHOWN

Metric

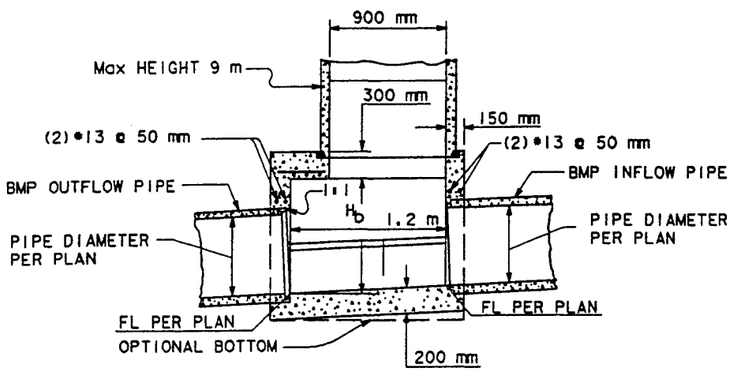

SECTION G-G

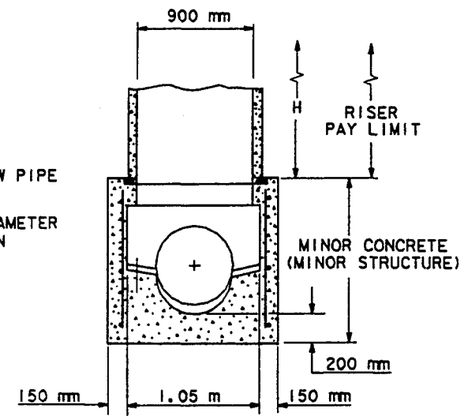

SECTION F-F

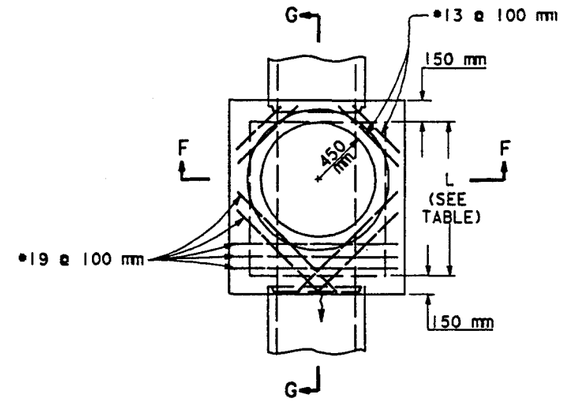

PLAN

MONITORING MANHOLE

GENERAL NOTES

1. RISERS MAY BE MADE UP OF 150 mm, 200 mm, 450 mm, 600 mm, OR 1200 mm SECTIONS.
2. EACH RISER SHALL HAVE A LADDER, AS DETAILED ON STANDARD PLAN D74C. WHICH SHALL BE SUSPENDED INTO BASE STRUCTURE.
3. ALL PRECAST COMPONENTS FOR UPPER PORTION TYPE MH SHALL BE REINFORCED WITH 6 mm DIAMETER STEEL WOUND SPIRALLY @ 100 mm CENTERS.
4. BOTTOMS SHALL HAVE A WOOD TROWEL FINISH.
5. H AND Hb SHALL BE AS SPECIFIED ON PLANS.
6. REINFORCING STEEL SHALL BE •13 BARS @ 450 mm CENTERS PLACED 40 mm CLEAR TO INSIDE OF BOX UNLESS OTHERWISE SHOWN.
7. PIPE(S) MAY BE PLACED IN ANY WALL.
8. NO DEDUCTION IN STRUCTURE CONCRETE QUANTITIES WILL BE MADE FOR PIPE OPENINGS.
9. DESIGN UNIT STRESSES: F_s = 140 MPa, n= 10, F_c = 10 MPa.
10. UPPER PORTION OF TYPE MH WILL BE PAID FOR AS 900 mm RISER.
11. CENTER OF RISER SHALL BE LOCATED OVER THE CENTERLINE OF MAIN STORM DRAIN.
12. THICKNESS OF DECK SHALL VARY WHEN NECESSARY TO PROVIDE LEVEL MANHOLE SEAT.

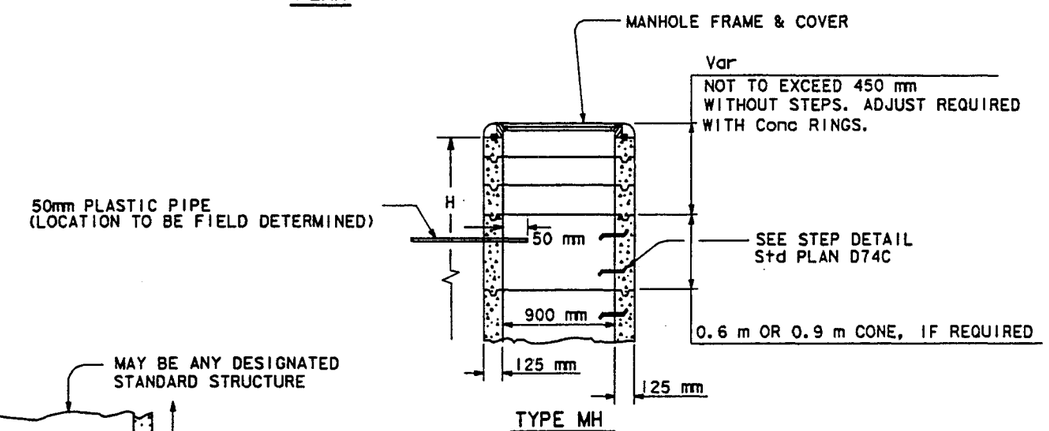

TYPE MH

FOR USE WITH EITHER TYPE X OR TYPE Y BASE STRUCTURES

UPPER STRUCTURE

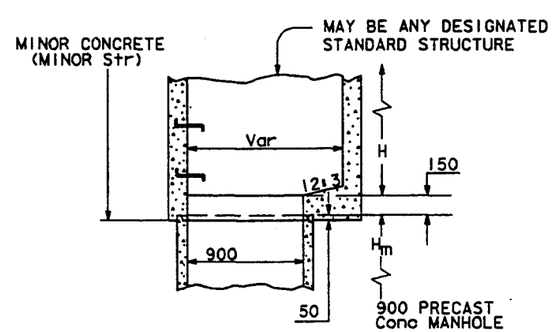

TYPICAL UPPER STRUCTURE AND MANHOLE JUNCTION

UPPER STRUCTURE

1 2 4

DRAINAGE DETAIL

NO SCALE

D-17

DATE	REVISED BY	DATE REVISED

CALCULATED/DESIGNED BY

CHECKED BY

PROJECT ENGINEER

STATE OF CALIFORNIA - DEPARTMENT OF TRANSPORTATION

Caltrans

15 MAR 98 23:04:55 q:\57704\34358\dgn\div\d17.div

DIST	COUNTY	ROUTE	KILOMETER POST TOTAL PROJECT	SHEET No	TOTAL SHEETS
11	SD	Var	Var		

REGISTERED CIVIL ENGINEER

PLANS APPROVAL DATE

REGISTERED PROFESSIONAL ENGINEER — CIVIL — STATE OF CALIFORNIA

The State of California or its officers or agents shall not be responsible for the accuracy or completeness of electronic copies of this plan sheet.

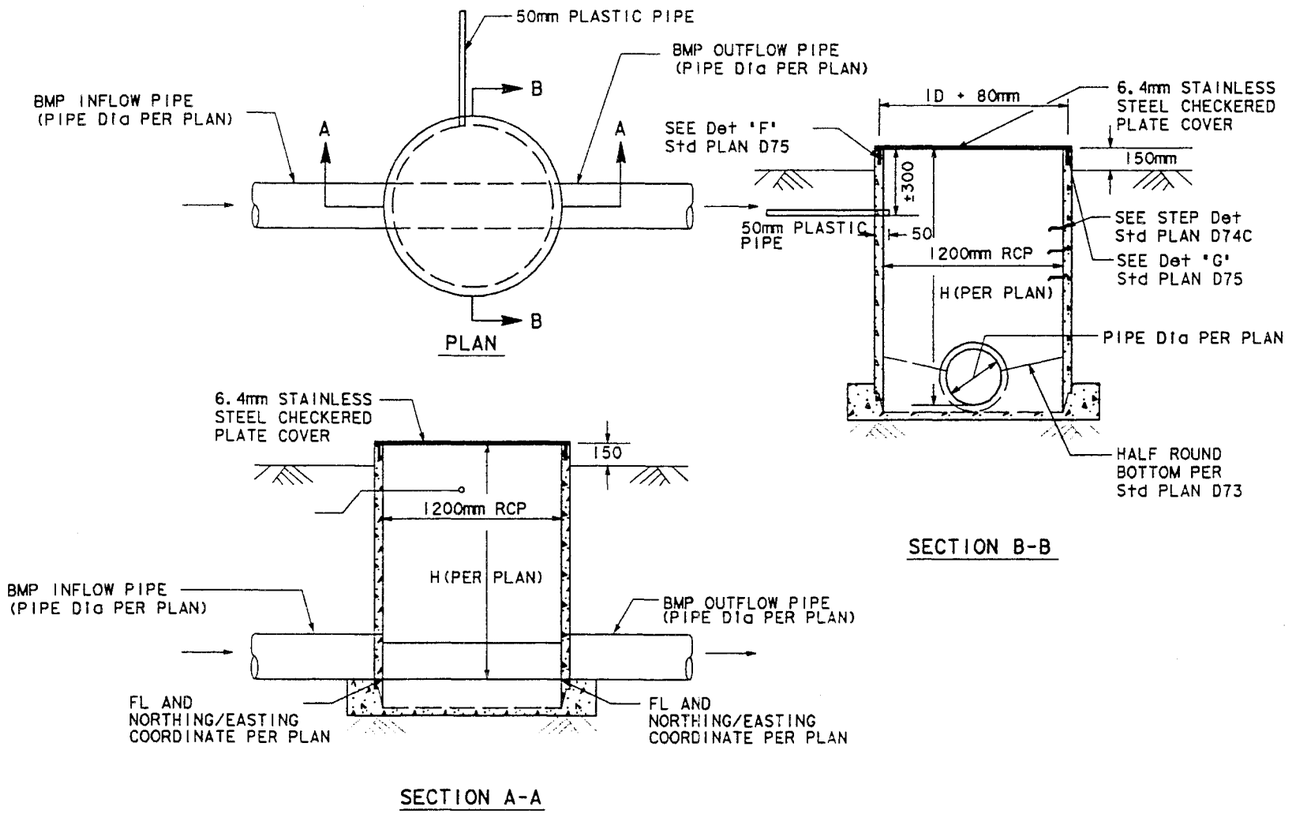

MODIFIED GCP MONITORING MANHOLE

ALL DIMENSIONS ARE IN MILLIMETERS
UNLESS OTHERWISE SHOWN

3

DRAINAGE DETAILS

NO SCALE

D-18

DATE	REVISED BY	DATE REVISED

CALCULATED/DESIGNED BY

CHECKED BY

PROJECT ENGINEER

STATE OF CALIFORNIA - DEPARTMENT OF TRANSPORTATION

Caltrans

15 MAR 98 22:58 qp\57704\34358\dgn\div\d18.div

FOR REDUCED PLANS ORIGINAL 0 20 40 60 80

USERNAME => $USER

LAST REVISION

DIST	COUNTY	ROUTE	KILOMETER POST TOTAL PROJECT	SHEET No	TOTAL SHEETS
11	SD	Var	Var		

REGISTERED CIVIL ENGINEER

PLANS APPROVAL DATE

REGISTERED PROFESSIONAL ENGINEER CIVIL STATE OF CALIFORNIA

The State of California or its officers or agents shall not be responsible for the accuracy or completeness of electronic copies of this plan sheet.

Caltrans Metric

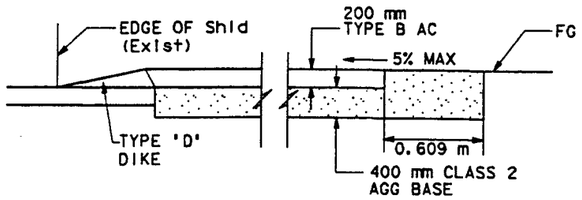

TYPICAL SECTION WITH DIKE
NO SCALE

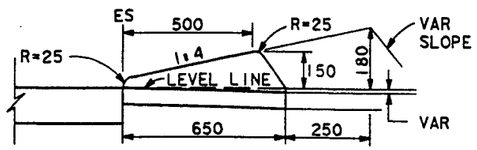

TYPE 'D'
MOUNTABLE DIKE
NO SCALE

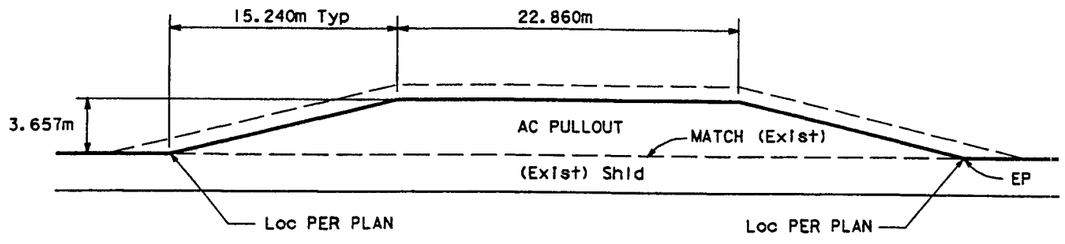

TYPICAL PULLOUT DETAIL
NO SCALE

TYPICAL B PULLOUT

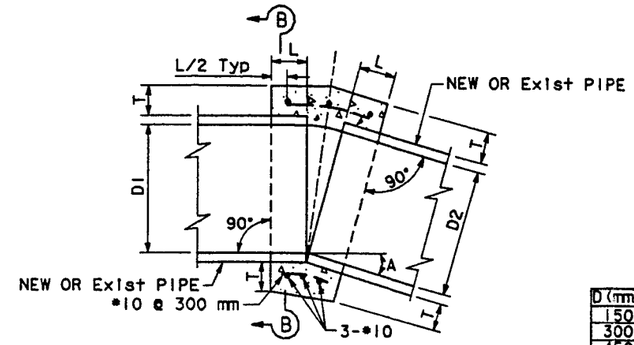

D (mm)	L (mm)	T (mm)
150	300	100
300	300	100
450	300	130
600	300	150
900	450	200
1200	450	250
1350	450	250
1500	550	280
1650	550	280
1800	600	300

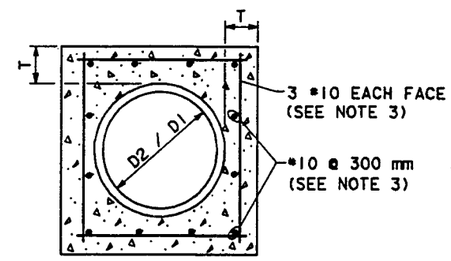

SECTION B-B
FOR D ≤ 1800 mm

NOTES:

1. WHERE PIPES OF DIFFERENT DIAMETERS ARE JOINED WITH A CONCRETE COLLAR, 'L' AND 'T' SHALL BE THOSE OF THE LARGER PIPE. D=D1 OR D2, WHICHEVER IS GREATER.
2. FOR PIPE SIZE NOT LISTED USE NEXT SIZE LARGER.
3. OMIT REINFORCING ON PIPES 600 mm AND LESS IN DIAMETER AND ON ALL PIPES WHERE ANGLE A IS LESS THAN 10°. REINFORCEMENT SHALL BE PLACED 40 mm CLEAR FROM OUTSIDE DIAMETER OF PIPE.
4. JOIN PIPES AT INVERTS.
5. INSIDE LAYER OF REINFORCEMENT SHALL BE PLACED 40 mm CLEAR FROM OUTSIDE DIAMETER OF PIPE. PLACE OUTSIDE LAYER OF REINFORCEMENT 200 mm FROM INSIDE LAYER OF REINFORCEMENT.

CONCRETE COLLAR

3 4 6

DRAINAGE DETAILS

NO SCALE

D-19

REVISED BY	DATE REVISED

CALCULATED/DESIGNED BY	DATE
CHECKED BY	

PROJECT ENGINEER

STATE OF CALIFORNIA - DEPARTMENT OF TRANSPORTATION

Caltrans

15 MAR 98 17:5... q:\57704\34358\dgn\div\dl9.div

FOR REDUCED PLANS ORIGINAL 0 20 40 60 80

DIST	COUNTY	ROUTE	KILOMETER POST TOTAL PROJECT	SHEET No	TOTAL SHEETS
11	SD	Var	Var		

REGISTERED CIVIL ENGINEER

PLANS APPROVAL DATE

REGISTERED PROFESSIONAL ENGINEER No. Exp. CIVIL STATE OF CALIFORNIA

The State of California or its officers or agents shall not be responsible for the accuracy or completeness of electronic copies of this plan sheet.

Caltrans Metric

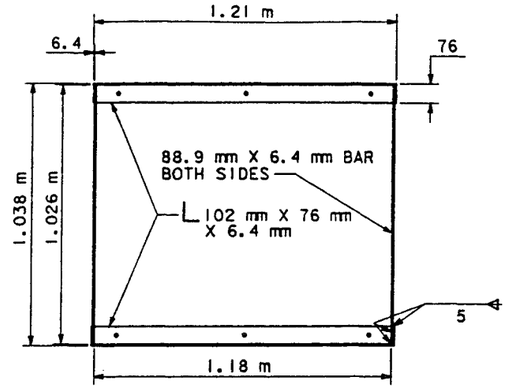

GRATE FRAME DETAIL

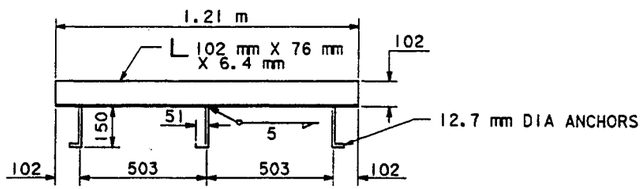

ANCHOR PLACEMENT DETAIL

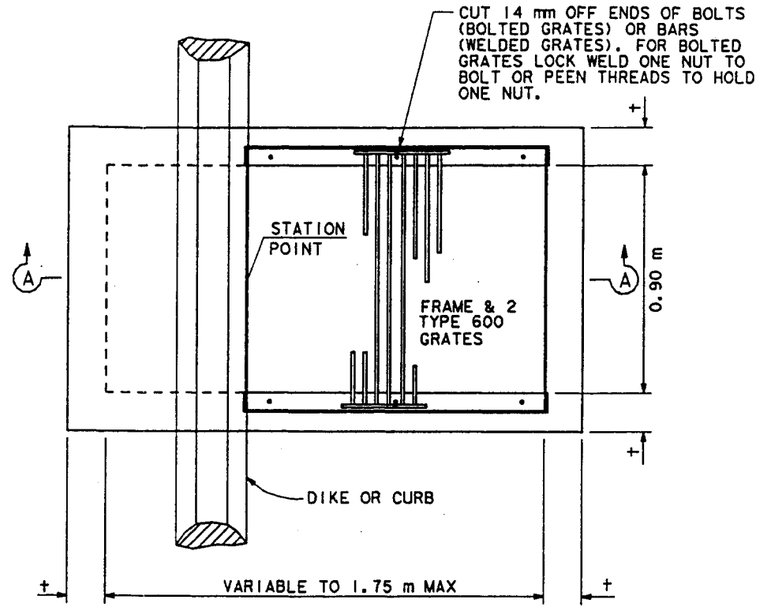

PLAN

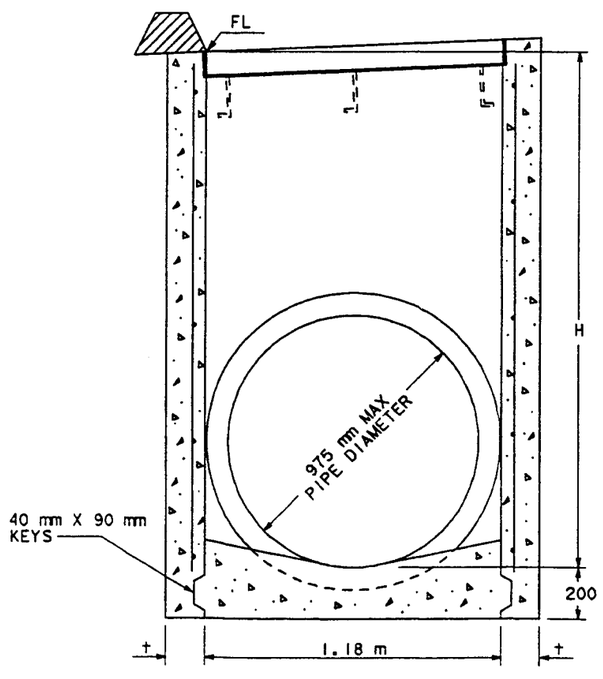

SECTION A-A

(FOR PIPE DIAMETERS 975 mm OR LESS)

GD-1

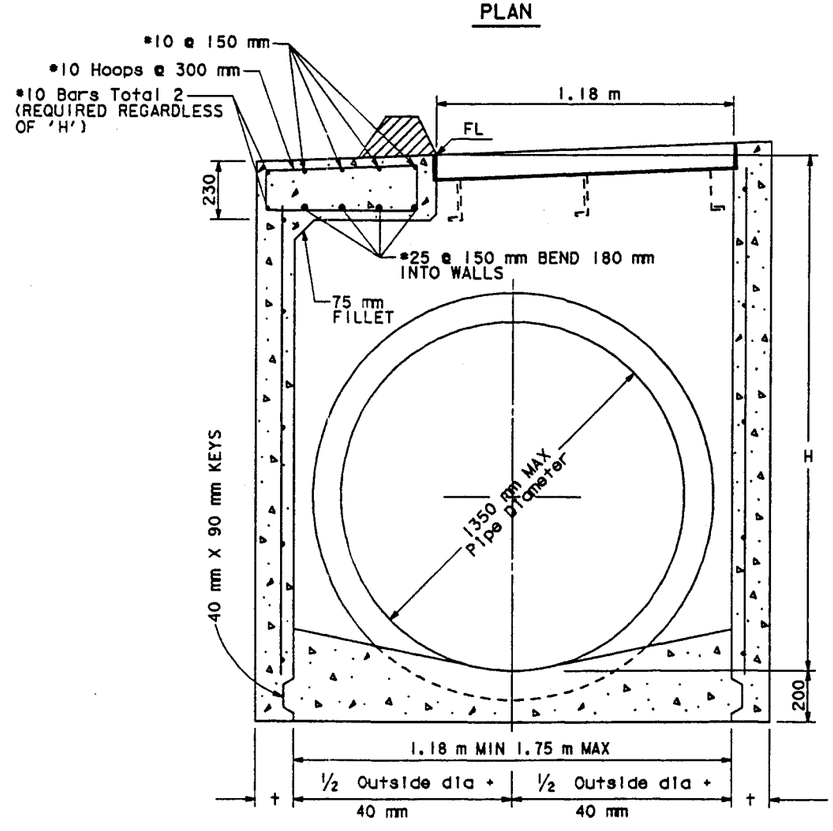

SECTION A-A

GD-2

NOTES

1. 'H' is the difference in elevation between the outlet pipe flow line and the flow line of the grates.
2. Steps - None required when 'H' is 1.05 m or less. Install one step 400 mm above floor when 'H' is more than 1.05 m and less than 1.50 m. Where 'H' is more than 1.50 m steps shall be evenly spaced @ 300 mm intervals from 400 mm above floor to within 300 mm of the top of the box. Place steps in wall without pipe openings. See Standard Plan D74C for step detail.
3. Pipe(s) can be placed in any wall.
4. Reinforcing steel not required in walls when 'H' = 1.80 m or less.
5. Reinforcing steel in walls shall be #10 bars @ 300 mm centers placed 40 mm clear to inside of box.
6. GRATE TYPE SHALL BE 600-12 UNLESS OTHERWISE SHOWN ON DRAINAGE PLAN.

MISCELLANEOUS IRON & STEEL

Inlet Type	Grate Type	Weight (kg)
GD-1 & GD-2	600 - 12	283
GD-1 & GD-2	600 - 10C	173
GD-1 & GD-2	600 - 10S	197
GD-1 & GD-2	600 - 12X	206
GD-1 & GD-2	600 - 13	160

H	t
2.50 m or less	150
2.51 m to 6.00 m	200
6.01 m to 7.00 m	250

DRAINAGE DETAILS

NO SCALE

D-20

DATE	REVISED BY	DATE REVISED

CALCULATED/DESIGNED BY

CHECKED BY

PROJECT ENGINEER

STATE OF CALIFORNIA - DEPARTMENT OF TRANSPORTATION

Caltrans

DATE TIME FILE

FOR REDUCED PLANS ORIGINAL SCALE IS IN MILLIMETERS 0 20 40 60 80

USERNAME => USER

DIST	COUNTY	ROUTE	KILOMETER POST TOTAL PROJECT	SHEET No	TOTAL SHEETS
11	SD	Var	Var		

REGISTERED CIVIL ENGINEER

PLANS APPROVAL DATE

The State of California or its officers or agents shall not be responsible for the accuracy or completeness of electronic copies of this plan sheet.

REGISTERED PROFESSIONAL ENGINEER No. Exp. CIVIL STATE OF CALIFORNIA

Caltrans Metric

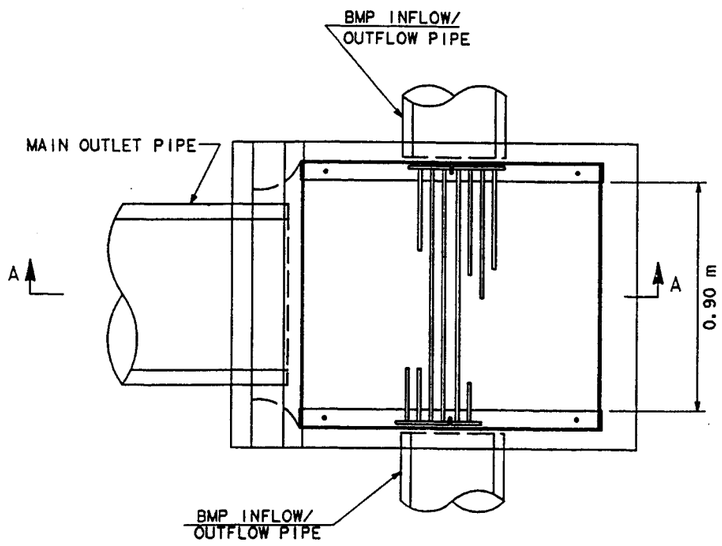

PLAN

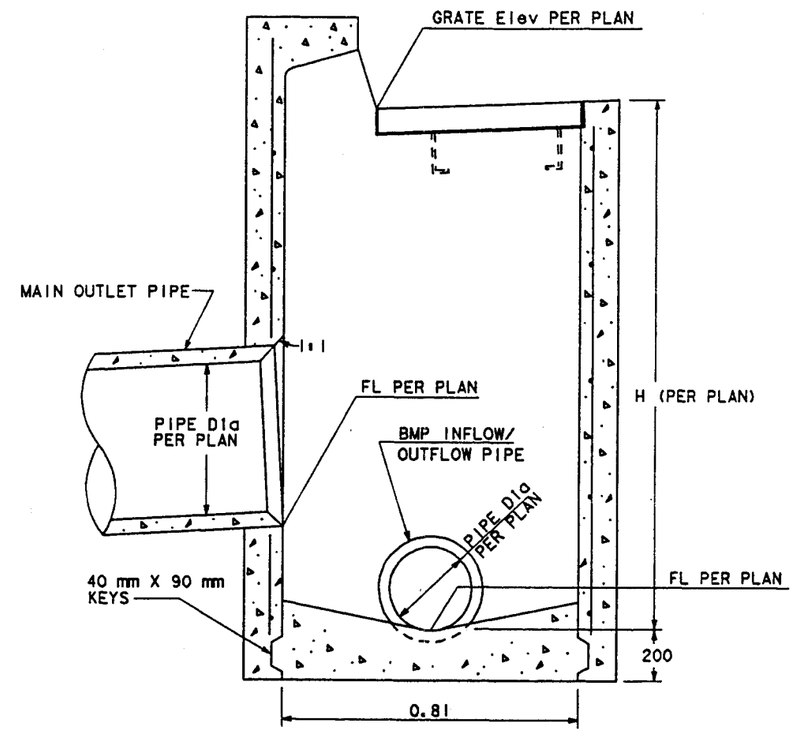

SECTION A-A

TYPE GO INLET DETAIL

4

DRAINAGE DETAILS

NO SCALE

D-21

ALL DIMENSIONS ARE IN MILLIMETERS UNLESS OTHERWISE SHOWN

STATE OF CALIFORNIA - DEPARTMENT OF TRANSPORTATION

Caltrans

PROJECT ENGINEER

CALCULATED/ DESIGNED BY

CHECKED BY

DATE

REVISED BY

DATE REVISED

15 MAR 98 23:05:.. q:\57704\34358\dgn\div\d21.div

DIST	COUNTY	ROUTE	KILOMETER POST TOTAL PROJECT	SHEET No	TOTAL SHEETS
11	SD	Var	Var		

REGISTERED CIVIL ENGINEER

PLANS APPROVAL DATE

The State of California or its officers or agents shall not be responsible for the accuracy or completeness of electronic copies of this plan sheet.

REGISTERED PROFESSIONAL ENGINEER No. Exp. CIVIL STATE OF CALIFORNIA

Caltrans Metric

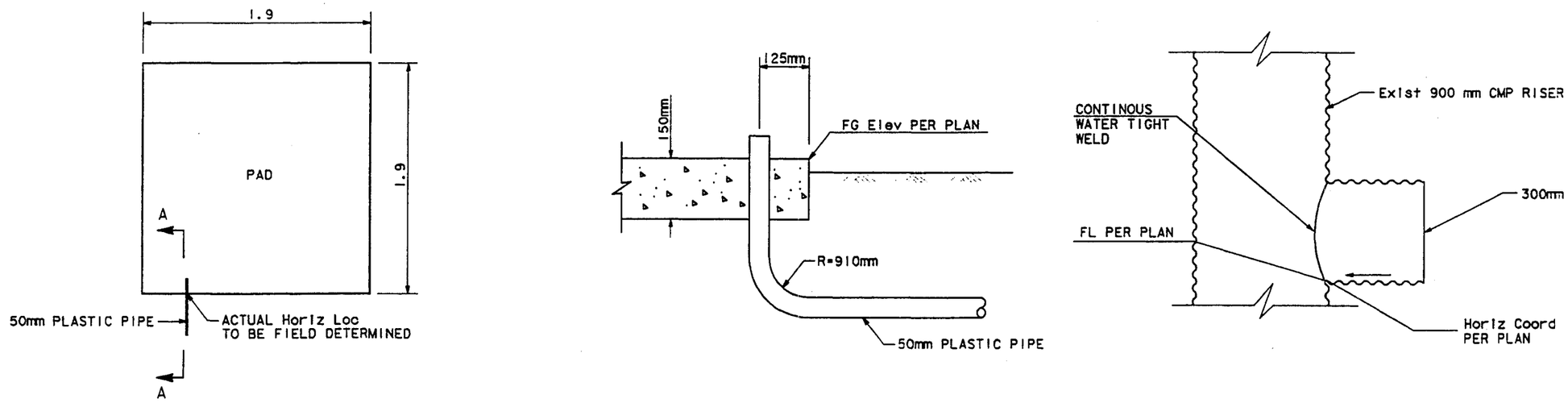

PLAN

SECTION A - A

JS No 2

1.9m X 1.9m CONCRETE PAD DETAILS

1 2 3 4 5 6 7

DRAINAGE DETAILS

NO SCALE

ALL DIMENSIONS ARE IN METERS UNLESS OTHERWISE SHOWN

D-22

STATE OF CALIFORNIA - DEPARTMENT OF TRANSPORTATION

Caltrans

PROJECT ENGINEER

CALCULATED/DESIGNED BY

CHECKED BY

DATE

REVISED BY

DATE REVISED

FOR REDUCED PLANS ORIGINAL 0 20 40 60 80

DIST	COUNTY	ROUTE	KILOMETER POST TOTAL PROJECT	SHEET No	TOTAL SHEETS
11	SD	Var	Var		

REGISTERED CIVIL ENGINEER

PLANS APPROVAL DATE

REGISTERED PROFESSIONAL ENGINEER — No. — Exp. — CIVIL — STATE OF CALIFORNIA

The State of California or its officers or agents shall not be responsible for the accuracy or completeness of electronic copies of this plan sheet.

Caltrans Metric

STRUCTURAL NOTES

1. STRUCTURAL CONCRETE SHALL BE CLASS 'A'.
2. ALL LONGITUDINAL BARS SHALL BE AS SHOWN. PLACE BARS IN BOTTOM SLAB SYMMETRICALLY ABOUT CENTERLINE. PLACE BARS IN WALLS STARTING AT TOP WITH 50mm OF CLEAR COVER.
3. CLEAR COVER FOR STEEL SHALL BE 50mm FOR WALLS AND 75mm EACH FACE FOR BOTTOM SLAB.
4. STEEL IS DIMENSIONED TO BACK OF BAR BEND.
5. FOR CONSTRUCTION ON CURVES, STRAIGHT TRANSVERSE BARS SHALL BE ALIGNED RADIALLY WITH SPACING MEASURED AT FACE OF WALL. FOR L-BARS IN WALLS, SPACING SHALL BE MEASURED BETWEEN THE VERTICAL LEGS OF BARS.
6. ALL TRANSVERSE CONSTRUCTION JOINTS SHALL BE IN A VERTICAL PLANE NORMAL TO THE CENTERLINE AND THE SPACING THEREOF SHALL NOT EXCEED 15 METERS OR BE LESS THAN 3 METERS. CONTINUOUS KEYWAYS SHALL BE CONSTRUCTED AS SHOWN IN DETAIL A. A COMPLETE CURTAIN OF TRANSVERSE STEEL SHALL BE PLACED 75mm FROM EACH FACE OF THE JOINTS AND LONGITUDINAL STEEL WILL NOT BE CONTINUOUS THROUGH THE JOINTS. IN ADDITION, EXPANSION JOINTS SHALL BE CONSTRUCTED BETWEEN REINFORCED CONCRETE CHANNEL AND REINFORCED CONCRETE BOX SECTIONS AS SHOWN IN DETAIL B. DOWELS SHALL BE PLACED AT 300mm SPACING CENTERED IN THE MIDDLE THIRD OF THE BOTTOM SLAB AND THE TOP THIRD OF SIDE WALLS. A MINIMUM OF 3 DOWELS PER SLAB AND WALLS SHALL BE PLACED.
7. ALL QUANTITIES SHOWN ARE APPROXIMATE.
8. ALL SPLICES ARE SUBJECT TO APPROVAL BY THE RESIDENT ENGINEER.
9. THE BAR LENGTH SHALL VARY UNIFORMLY THROUGHOUT THE TRANSITIONS.

	DATA		TYPE I		TYPE II
			(3)	(4)	(2)
Conc	W	(m)	3.657	2.134	1.070
	MAX H	(m)	2.623	3.848	1.201
	WALL T_3	(mm)	230	305	205
	BOTTOM SLAB T_4	(mm)	255	355	205
Reinf	LONGITUDINAL BAR		10@360	10@280	10@360
	'a' BAR		15@210	15@150	15@420
	HORIZ L	(mm)	2290	1880	990
	VERT L	(mm)	2740	4090	1300
	'b' BAR		20@210	25@200	15@420
	HORIZ L	(mm)	1220	1370	990
	VERT L	(mm)	1520	1520	760
	'c' BAR		10@240	15@200	10@320
	HORIZ L	(mm)	280	380	280
	VERT L	(mm)	2740	4090	1300
	'd' BAR		10@240	15@140	NOT REQUIRED
	HORIZ L	(mm)	280	380	-
	VERT L	(mm)	2740	960	-
	'e' BAR		10@240	15@140	10@320
	HORIZ L	(mm)	2180	1520	990
	'f' BAR		15@310	15@200	NOT REQUIRED
	HORIZ L	(mm)	2180	1520	-
QUANTITY	CONCRETE	(m^3/m)	2.33	3.44	0.85
	REINFORCEMENT	(kg/m)	239	463	63

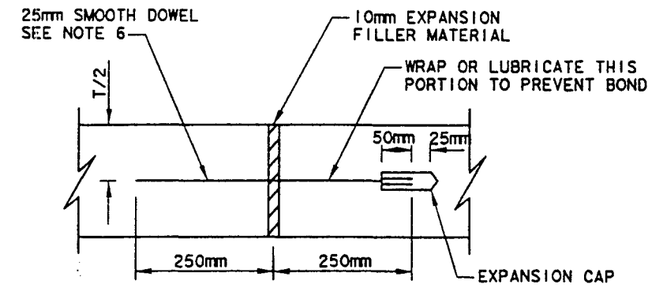

TRANSVERSE EXPANSION JOINT

DETAIL B

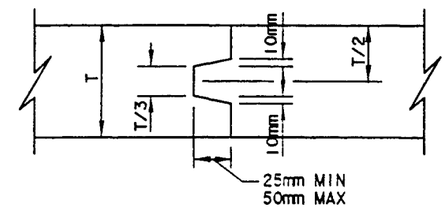

TRANSVERSE CONSTRUCTION JOINT

DETAIL A

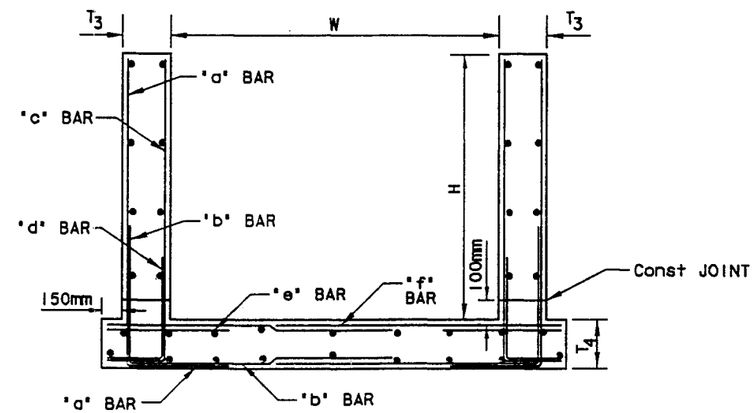

TYPICAL SECTION

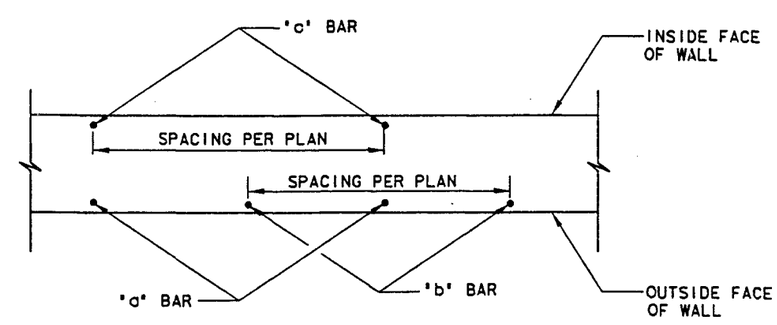

WALL SECTION

DESIGN DATA :

LIVE LOAD = 7.26 TONNE
SOIL DENSITY = 1.76 TONNE/m3
ALLOWABLE STRESSES :
fc = 28 MPa
f'c = 12 MPa
fy = 414 MPa
fs = 165 MPa

Min LAP :

'a' BARS = 450 mm
'b' BARS = 775 mm
'c' BARS = 400 mm

(2) (3) (4)

DRAINAGE DETAILS

NO SCALE

D-23

STATE OF CALIFORNIA - DEPARTMENT OF TRANSPORTATION

Caltrans

PROJECT ENGINEER

CALCULATED/DESIGNED BY | CHECKED BY

DATE | REVISED BY | DATE REVISED

DATE TIME FILE

FOR REDUCED PLANS ORIGINAL 0 20 40 60 80

LAST REVISION

DATE	REVISED BY	DATE REVISED

CALCULATED/ DESIGNED BY	CHECKED BY

PROJECT ENGINEER

STATE OF CALIFORNIA - DEPARTMENT OF TRANSPORTATION

Caltrans

ALTERNATIVE PIPE CULVERTS ALLOWABLE PIPE MATERIAL AND PROTECTION						
	RCP	PPC	CSP (SH)	SSRP		
DESIGNATION	SIZE (mm)	SIZE (mm)	SIZE (mm)	SIZE (mm)	THICKNESS (mm)	BITUMINOUS COATING
150 mm AP	N/A	150	150	150	1.6	YES
200 mm AP	N/A	200	200	200	1.6	YES
250 mm AP	N/A	250	250	250	1.6	YES

ALTERNATIVE PIPE CULVERTS ALLOWABLE PIPE MATERIAL AND PROTECTION						
	RCP	PPC	CSP (SH)	SSRP		
DESIGNATION	SIZE (mm)	SIZE (mm)	SIZE (mm)	SIZE (mm)	THICKNESS (mm)	BITUMINCUS COATING
300 mm AP	300	300	300	300	1.6	YES

LEGEND AND ABBREVIATIONS

GCP, GI, GDI - INLET TYPE
D - DOWNDRAIN JOINT TYPE
S - STANDARD JOINT TYPE
P - POSITIVE JOINT TYPE
CSP - CORRUGATED STEEL PIPE
PPC - PLASTIC PIPE CULVERT
SSRP - STEEL SPIRAL RIB PIPE
SH - SMOOTH

Caltrans Metric

DIST	COUNTY	ROUTE	KILOMETER POST TOTAL PROJECT	SHEET No	TOTAL SHEETS
11	SD	Var	Var		

REGISTERED CIVIL ENGINEER

PLANS APPROVAL DATE

REGISTERED PROFESSIONAL ENGINEER No. Exp. CIVIL STATE OF CALIFORNIA

AGUILAR ENGINEERING INCORPORATED
937 SOUTH VIA LATA
SUITE 500
COLTON, CA 92324

The State of California or its officers or agents shall not be responsible for the accuracy or completeness of electronic copies of this plan sheet.

DRAINAGE SYSTEM No	DRAINAGE UNIT	REMOVE DRAINAGE FACILITY	REMOVE PIPE	REMOVE CONCRETE GUTTER	REMOVE ASPHALT CONCRETE DIKE	REMOVE PAVEMENT	REMOVE ASPHALT CONCRETE	REMOVE TREE	DITCH EXCAVATION	RESET UTILITY (N)	RESET DRAINAGE FACILITY	ASPHALT CONCRETE DIKE	TYPE AI-150 CURB	AGGREGATE BASE (CLASS II)	ASPHALT CONCRETE (TYPE B)	PLACE AC (MISC AREA)	MINOR CONCRETE (MINOR STRUCTURE)	MINOR CONCRETE (MISC CONST)	TYPE I SAND FILTER BMP	TYPE II SAND FILTER BMP	MISCELLANEOUS IRON AND STEEL	(N) FRAMES GRATES & COVERS: MH FRAME AND COVER	CHECKERED PLATE	TYPE 600-12	TYPE 900R	FLARED END SECTION (AP)	FLOW METER: TRAPEZOIDAL FLUME	PARSHALL FLUME	XXXXX	XXXXX	COMPOST FILTER BMP	OCP MONITORING MANHOLE	MONITORING MANHOLE	STAINLESS STEEL MONITORING WELL	INFILTRATION TRENCH BMP	CL GATE	50 mm PLASTIC CONDUIT	AP: 150 mm	200 mm	250 mm	300 mm	450 mm	300 mm DIP	BIO-FILTER SWALE BMP	BIO-FILTER STRIP BMP	(N) ELBOW	(N) TEE	(N) PIPE JOINT CLASSIFICATION	(N) HEIGHT OF INLET "H" OR "V"	(N) MAXIMUM COVER	DESCRIPTION	NORTHING/EASTING (OR STATION)	DRAINAGE PLAN SHEET No	DRAINAGE SYSTEM No	DRAINAGE UNIT
		EA	m	LS	m	m3	LS	EA	m2	EA	EA	m	m	TONN	TONN	m2	m3	m3	EA	EA	kg	EA	EA	EA	EA	EA	EA	EA	EA	EA	EA	EA	EA	EA	EA	EA	m	m	m	m	m	m	m	EA	EA	EA	EA		m	m					
																	1.62				283			2																											GDI INLET	573218.7881/914574.2752	1	1	a
																																									5.2							S			300mm AP	573218.7881/914574.2752			b
																																	1																		MONITORING MH	573215.5737/914578.3629			c
																		0.54																																	CONC PAD	573218.2788/914581.3557			d
																																									5.0							S			300mm AP	573214.8202/914579.3213			e
																															1																				COMPOST FILTER BMP VAULT NO 1	573211.7294/914583.2516			f
																																											1.6					S			300mm DIP	573207.9614/914588.0435			g
																															1																				COMPOST FILTER BMP VAULT NO 2	573207.0193/914589.2416			h
																																									1.6							S			300mm AP	573203.2514/914594.0335			i
																															1																				COMPOST FILTER NO 3	573202.3093/914595.2317			j
																																											2.9					S			300mm DIP	573198.5411/914600.0235			k
																		0.54																																	CONC PAD	573199.5259/914605.2521			l
																																	1																		MONITORING MH	573195.9951/914603.2615			m
																																									5.0							S			300mm AP	573195.9951/914603.2615			n
																	0.35				107																														GCP INLET	573192.9049/914607.1922			o
																																									5.1							S			300mm AP	573192.9922/914607.9215			p
																	1.21	5.0			283			2																											GDI INLET W/ CONC SWALE TRANS	573196.9862/914611.0615			q
																																					2.5											S			PLASTIC PIPE	573218.2788/914581.3557			r
																																					2.5											S			PLASTIC PIPE	573199.5259/914605.2521			s
												7																																							TYPE F AC DIKE	573196.9862/914611.0615			t
																		0.05																																	JS NO 1	607075.1458/918988.2119	2	2	a
																																								2.2											250mm AP	607075.1458/918988.2119			b
																						1											1																		MONITORING MH	607076.9204/918989.1343			c
																																								36.4											250mm AP	607077.9851/918989.6877			d
																																						1.5													150mm AP	607081.0905/918991.3019			e
																																						1.5													150mm AP	607081.0905/918991.3019			f
																																						1.5													150mm AP	607081.0905/918991.3019			g
																																						1.5													150mm AP	607100.3892/919001.3330			h
																																						1.5													150mm AP	607100.3892/919001.3330			i
																																						1.5													150mm AP	607100.3892/919001.3330			j
																	0.52				50		1																												OCP INLET W/ CHECKERED PL	607100.3892/919001.3330			k
																																						1.0													150mm AP	607101.4562/919000.2561			l
																				1																															TYPE 2 SAND FILER	607081.5270/918987.3185			m
																																								4.4											250mm AP	607103.4817/918999.5033			n
																						1											1																		MONITORING MH	607107.6538/919000.1813			o
																																								3.7											250mm AP	607108.8382/919000.3739			p
																	3.22	1.50			888			6																											GT3 INLET W/ LOCAL DEPRESS	607112.3152/919000.9390			q
																		0.54																																	CONC PAD	607080.5484/918986.0081			r
																																					3.4														PLASTIC PIPE	607080.5484/918986.0081			s
																		0.54																																	CONC PAD	607103.6806/918997.1692			t
												7					6.92	9.71		1	1611	2	1	10							3		4				8.4	10		46.7	21.9		4.5								SHEET TOTAL				

DRAINAGE QUANTITIES

D-24

LAST REVISION

DIST	COUNTY	ROUTE	KILOMETER POST TOTAL PROJECT	SHEET No	TOTAL SHEETS
11	SD	Var	Var		

Caltrans Metric

REGISTERED CIVIL ENGINEER

PLANS APPROVAL DATE

REGISTERED PROFESSIONAL ENGINEER — CIVIL — STATE OF CALIFORNIA

AGUILAR ENGINEERING INCORPORATED
937 SOUTH VIA LATA
SUITE 500
COLTON, CA 92324

The State of California or its officers or agents shall not be responsible for the accuracy or completeness of electronic copies of this plan sheet.

DRAINAGE SYSTEM No	DRAINAGE UNIT	REMOVE DRAINAGE FACILITY (EA)	REMOVE PIPE (m)	REMOVE CONCRETE GUTTER (LS)	REMOVE ASPHALT CONCRETE DIKE (m)	REMOVE PAVEMENT (m3)	REMOVE ASPHALT CONCRETE (LS)	REMOVE TREE (EA)	DITCH EXCAVATION (m2)	RESET UTILITY (N) (EA)	RESET DRAINAGE FACILITY (EA)	ASPHALT CONCRETE DIKE (m)	TYPE A1-150 CURB (m)	AGGREGATE BASE (CLASS II) (TONN)	ASPHALT CONCRETE (TYPE B) (TONN)	PLACE AC (MISC AREA) (m2)	MINOR CONCRETE (MINOR STRUCTURE) (m3)	MINOR CONCRETE (MISC CONST) (m3)	TYPE I SAND FILTER BMP (EA)	TYPE II SAND FILTER BMP (EA)	MISCELLANEOUS IRON AND STEEL (kg)	(N) FRAMES GRATES & COVERS: MH FRAME AND COVER (EA)	CHECKERED PLATE (EA)	TYPE 600-12 (EA)	TYPE 900R (EA)	FLARED END SECTION (AP) (EA)	FLOW METER: TRAPEZOIDAL FLUME (EA)	PARSHALL FLUME (EA)	XXXXX (EA)	XXXXX (EA)	COMPOST FILTER BMP (EA)	OCP MONITORING MANHOLE (EA)	MONITORING MANHOLE (EA)	STAINLESS STEEL MONITORING WELL (EA)	INFILTRATION TRENCH BMP (EA)	CL GATE (EA)	50 mm PLASTIC CONDUIT (m)	AP: 150 mm (m)	200 mm (m)	250 mm (m)	300 mm (m)	450 mm (m)	300 mm DIP (m)	BIO-FILTER SWALE BMP (EA)	BIO-FILTER STRIP BMP (EA)	(N) ELBOW (EA)	(N) TEE (EA)	PIPE JOINT CLASSIFICATION	(N) HEIGHT OF INLET "H" OR "V" (m)	(N) MAXIMUM COVER (m)	DESCRIPTION	NORTHING/EASTING (OR STATION)	DRAINAGE PLAN SHEET No	DRAINAGE SYSTEM No	DRAINAGE UNIT
3	a																	5.30																																	INLET Chnl	602423.7233 / 1902239.6352	3	3	a
	b																											1																						PARSHALL FLUME	602426.1398 / 1902231.8584			b
	c																																					2.3												PLASTIC PIPE	602426.1398 / 1902231.8584			c
	d																	0.54																															Conc PAD	602426.1398 / 1902231.8584			d
	e	14.8																																															REMOVE Exist INLET	602422.1807 / 1902238.5408			e
	f																		1																															TYPE I SAND FILTER BMP	602425.1358 / 1902228.7453			f
	g																																						1.0											150mm AP	602443.9890 / 1902215.9155			g
	h																																					2.4											PLASTIC PIPE	602445.0343 / 1902214.6919			h
	i																	0.54																															Conc PAD	602443.0688 / 1902211.2963			i
	j																																						1.0											150mm AP	602445.0343 / 1902214.6919			j
	k																				51		1										1																	OCP WITH NO OPENING	602446.4755 / 1902213.0050			k
	l																																						8.0											150mm PIPE	602446.4755 / 1902213.0050			l
	m																0.08																															Conc COLLAR	602449.6844 / 1902220.9488			m
	n																				107													1															GCP MONITORING MH	602445.0343 / 1902214.6919			n
	o																																						20.0											150mm PIPE	602449.6844 / 1902220.9488			o
	p																0.08																															Conc PIPE	602436.6930 / 1902236.1549			p
	q																																						14.6											150mm PIPE	602436.6930 / 1902236.1549			q
	r																1.63	0.88																															G2 INLET WITH DEPRESSED APRON	602424.0491 / 1902243.4550			r
	s																	3.40																															OVERFLOW Chnl	602424.0491 / 1902243.4550			s
		14.8															1.79	10.65			158																	4.7	44.6											SHEET TOTAL				

DATE | REVISED BY | DATE REVISED

CALCULATED/DESIGNED BY | CHECKED BY

PROJECT ENGINEER

STATE OF CALIFORNIA - DEPARTMENT OF TRANSPORTATION

Caltrans

DRAINAGE QUANTITIES

D-25

FOR REDUCED PLANS ORIGINAL 0 20 40 60 80 | USERNAME => 999999USER999999

DIST	COUNTY	ROUTE	KILOMETER POST TOTAL PROJECT	SHEET No	TOTAL SHEETS
11	SD	Var	Var		

REGISTERED CIVIL ENGINEER

PLANS APPROVAL DATE

REGISTERED PROFESSIONAL ENGINEER — CIVIL — STATE OF CALIFORNIA

AGUILAR ENGINEERING INCORPORATED
937 SOUTH VIA LATA
SUITE 500
COLTON, CA 92324

The State of California or its officers or agents shall not be responsible for the accuracy or completeness of electronic copies of this plan sheet.

Caltrans Metric

DRAINAGE SYSTEM No	DRAINAGE UNIT	REMOVE DRAINAGE FACILITY (EA)	REMOVE PIPE (m)	REMOVE CONCRETE GUTTER (LS)	REMOVE ASPHALT CONCRETE DIKE (m)	REMOVE PAVEMENT (m3)	REMOVE ASPHALT CONCRETE (LS)	REMOVE TREE (EA)	DITCH EXCAVATION (m2)	RESET UTILITY (N) (EA)	RESET DRAINAGE FACILITY (EA)	ASPHALT CONCRETE DIKE (m)	TYPE A1-150 CURB (m)	AGGREGATE BASE (CLASS II) (TONN)	ASPHALT CONCRETE (TYPE B) (TONN)	PLACE AC (MISC AREA) (m2)	MINOR CONCRETE (MINOR STRUCTURE) (m3)	MINOR CONCRETE (MISC CONST) (m3)	TYPE I SAND FILTER BMP (EA)	TYPE II SAND FILTER BMP (EA)	MISCELLANEOUS IRON AND STEEL (kg)	(N) FRAMES GRATES & COVERS: MH FRAME AND COVER (EA)	CHECKERED PLATE (EA)	TYPE 600-12 (EA)	TYPE 900R (EA)	FLARED END SECTION (AP) (EA)	FLOW METER: TRAPEZOIDAL FLUME (EA)	PARSHALL FLUME (EA)	XXXXX (EA)	XXXXX (EA)	COMPOST FILTER BMP (EA)	OCP MONITORING MANHOLE (EA)	MONITORING MANHOLE (EA)	STAINLESS STEEL MONITORING WELL (EA)	INFILTRATION TRENCH BMP (EA)	CL GATE (EA)	50 mm PLASTIC CONDUIT (m)	AP: 150 mm (m)	200 mm (m)	250 mm (m)	300 mm (m)	450 mm (m)	300 mm DIP (m)	BIO-FILTER SWALE BMP (EA)	BIO-FILTER STRIP BMP (EA)	(N) ELBOW (EA)	(N) TEE (EA)	(N) PIPE JOINT CLASSIFICATION	(N) HEIGHT OF INLET "H" OR "V" (m)	(N) MAXIMUM COVER (m)	DESCRIPTION	NORTHING/EASTING (OR STATION)	DRAINAGE PLAN SHEET No	DRAINAGE SYSTEM No	DRAINAGE UNIT
		1																																																							
													2				1.48				107																																				
																	0.30																														1.892							
																																										1													
													2																																											
													2																											17																	
																	0.30																											2												
													2																																											
																	1.52				107																										1.892							
																																								3.5																	
																																	1																								
																	0.54																							6.2																		
																	0.54																1																									
																																								3																		
																																	1																									
																	0.23																							3																		
																																										17																
														61.3	31.8																																										
																																					5																					
																																					1.5																					
		1											8	61.3	31.8		4.91		1		214												2					6.5		32.7		17		3							3.78					

SHEET TOTAL

DESCRIPTION	NORTHING/EASTING (OR STATION)	DRAINAGE PLAN SHEET No	DRAINAGE SYSTEM No	DRAINAGE UNIT
REMOVE Exist GMP INLET	612648.1158/1897216.2133	4	4	a
REMOVE & REPLACE CURB	612647.9740/1897215.4015			b
TYPE G0 INLET	612647.4219/1897215.3857			c
Conc COLLAR	612648.1158/1897216.2133			d
450mm AP	612647.9740/1897215.4015			e
REMOVE & REPLACE CURB	612647.4219/1897215.3857			g
200mm AP	612647.4219/1897215.3857			h
REMOVE & REPLACE CURB	612633.0007/1897225.4293			i
450mm AP	612633.0007/1897225.4293			j
Conc COLLAR	612634.1017/1897227.2153			k
REMOVE & REPLACE CURB	612632.4486/1897225.4210			l
TYPE G0 INLET	612633.1898/1897224.9106			m
200mm AP	612632.4486/1897225.4210			n
MONITORING MH	612628.0394/1897227.0486			o
200mm AP	612628.0394/1897227.0486			p
Conc PAD	612624.4985/1897226.5610			q
SAND MEDIA FILTER BMP (TYPE I)	612621.9415/1897229.2895			r
200mm AP	612609.2227/1897233.3337			s
Conc PAD	612606.8244/1897232.5092			t
MONITORING MH	612606.4645/1897234.5257			u
200mm AP	612605.3532/1897234.9785			v
Conc COLLAR	612602.5750/1897236.1105			w
300mm CSP	612602.5750/1897236.1105			x
JS	612596.1185/1897251.6231			z
TYPE B PULLOUT	612626.1190/1897237.9864			aa
50mm PLASTIC PIPE	612629.1651/1897226.6330			bb
50mm PLASTIC PIPE	612606.4645/1897234.5257			cc

STATE OF CALIFORNIA - DEPARTMENT OF TRANSPORTATION

Caltrans

DATE | REVISED BY | DATE REVISED

CALCULATED/DESIGNED BY

CHECKED BY

PROJECT ENGINEER

DRAINAGE QUANTITIES

D-28

FOR REDUCED PLANS ORIGINAL SCALE IS IN MILLIMETERS 0 20 40 60 80

USERNAME -> ******USER******

CU 00000 | EA 000000

DIST	COUNTY	ROUTE	KILOMETER POST TOTAL PROJECT	SHEET No	TOTAL SHEETS
11	SD	Var	Var		

Caltrans Metric

REGISTERED CIVIL ENGINEER

PLANS APPROVAL DATE

REGISTERED PROFESSIONAL ENGINEER — CIVIL — STATE OF CALIFORNIA

AGUILAR ENGINEERING INCORPORATED
937 SOUTH VIA LATA
SUITE 500
COLTON, CA 92324

The State of California or its officers or agents shall not be responsible for the accuracy or completeness of electronic copies of this plan sheet.

DRAINAGE SYSTEM No	DRAINAGE UNIT	REMOVE DRAINAGE FACILITY (EA)	REMOVE PIPE (m)	REMOVE CONCRETE GUTTER (LS)	REMOVE ASPHALT CONCRETE DIKE (m)	REMOVE PAVEMENT (m3)	REMOVE ASPHALT CONCRETE (LS)	REMOVE TREE (EA)	DITCH EXCAVATION (m2)	(N) RESET UTILITY (EA)	RESET DRAINAGE FACILITY (EA)	ASPHALT CONCRETE DIKE (m)	TYPE A1-150 CURB (m)	AGGREGATE BASE (CLASS II) (TONN)	ASPHALT CONCRETE (TYPE B) (TONN)	PLACE AC (MISC AREA) (m2)	MINOR CONCRETE (MINOR STRUCTURE) (m3)	MINOR CONCRETE (MISC CONST) (m3)	TYPE I SAND FILTER BMP (EA)	TYPE II SAND FILTER BMP (EA)	MISCELLANEOUS IRON AND STEEL (kg)	(N) FRAMES GRATES & COVERS: MH FRAME AND COVER (EA)	CHECKERED PLATE (EA)	TYPE 600-12 (EA)	TYPE 900R (EA)	FLARED END SECTION (AP) (EA)	FLOW METER: TRAPEZOIDAL FLUME (EA)	PARSHALL FLUME (EA)	XXXXX (EA)	XXXXX (EA)	COMPOST FILTER BMP (EA)	OCP MONITORING MANHOLE (EA)	MONITORING MANHOLE (EA)	STAINLESS STEEL MONITORING WELL (EA)	INFILTRATION TRENCH BMP (EA)	CL GATE (EA)	50 mm PLASTIC CONDUIT (m)	AP: 150 mm (m)	200 mm (m)	250 mm (m)	300 mm (m)	450 mm (m)	300 mm DIP (m)	BIO-FILTER SWALE BMP (EA)	BIO-FILTER STRIP BMP (EA)	(N) ELBOW (EA)	(N) TEE (EA)	(N) PIPE JOINT CLASSIFICATION	(N) HEIGHT OF INLET "H" OR "V" (m)	(N) MAXIMUM COVER (m)	DESCRIPTION	NORTHING/EASTING (OR STATION)	DRAINAGE PLAN SHEET No	DRAINAGE SYSTEM No	DRAINAGE UNIT
																		0.54																																				
																												1																									
																																						1.6																
																																														1							
																												1																										
																		0.54																					2.2															
																												1																										
																																											3.0											
																																											3.8											
																																											0.5											
																	0.55																																					
															0.1	1																															1.3						
																																					1																	
															0.2	2																																							
														0.3	3	0.55	1.08										2										3.8			7.3		4					1.3		SHEET TOTAL				

STATE OF CALIFORNIA - DEPARTMENT OF TRANSPORTATION

Caltrans

PROJECT ENGINEER

CALCULATED/DESIGNED BY

CHECKED BY

DATE REVISED BY

DATE REVISED

DRAINAGE QUANTITIES

TIME PLOTTED --> 00:00:00 LAST REVISION 00-00-00

DIST	COUNTY	ROUTE	KILOMETER POST TOTAL PROJECT	SHEET No	TOTAL SHEETS
11	SD	Var	Var		

Caltrans Metric

REGISTERED CIVIL ENGINEER

PLANS APPROVAL DATE

REGISTERED PROFESSIONAL ENGINEER No. Exp. CIVIL STATE OF CALIFORNIA

AGUILAR ENGINEERING INCORPORATED
937 SOUTH VIA LATA
SUITE 500
COLTON, CA 92324

The State of California or its officers or agents shall not be responsible for the accuracy or completeness of electronic copies of this plan sheet.

DATE | REVISED BY | DATE REVISED | CALCULATED/DESIGNED BY | CHECKED BY | PROJECT ENGINEER

DESCRIPTION	NORTHING/EASTING (OR STATION)	DRAINAGE PLAN SHEET No	DRAINAGE SYSTEM No	DRAINAGE UNIT
CONC SWALE	607011.0170/899665.8981	6	6	a
RESET EXIST GCP	607011.0170/899665.8981			b
CONC PAD	606994.4968/899671.4246			c
TYPE B PULLOUT	606994.4968/899671.4246			d
TRAPEZOIDAL FLUME	607020.5817/899660.241			e
BIOFILTER SWALE BMP	607033.3431/899650.8092			f
TRAPEZOIDAL FLUME	607120.7971/899610.2552			g
CONC PAD	607119.8112/899609.7852			h
CONC SWALE	907120.7971/899610.2552			i
PLASTIC PIPE	607021.5479/899659.5888			j
PLASTIC PIPE	607119.8112/899609.7852			k
SHEET TOTAL				

DRAINAGE UNIT	DRAINAGE SYSTEM No	DRAINAGE UNIT	REMOVE DRAINAGE FACILITY (EA)	REMOVE PIPE (m)	REMOVE CONCRETE GUTTER (LS)	REMOVE ASPHALT CONCRETE DIKE (m)	REMOVE PAVEMENT (m3)	REMOVE ASPHALT CONCRETE (LS)	REMOVE TREE (EA)	DITCH EXCAVATION (m2)	RESET UTILITY (N) (EA)	RESET DRAINAGE FACILITY (EA)	ASPHALT CONCRETE DIKE (m)	TYPE A1-150 CURB (m)	AGGREGATE BASE (CLASS II) (TONN)	ASPHALT CONCRETE (TYPE B) (TONN)	PLACE AC (MISC AREA) (m2)	MINOR CONCRETE (MINOR STRUCTURE) (m3)	MINOR CONCRETE (MISC CONST) (m3)
a																			4.90
b												1							
c																			0.54
d															61.3	31.8			
e																			
f										18.68									
g																			
h																			0.54
i																			85.65
j																			
k																			
SHEET TOTAL										18.68		1			61.3	31.8			91.63

DRAINAGE UNIT	TYPE I SAND FILTER BMP (EA)	TYPE II SAND FILTER BMP (EA)	MISCELLANEOUS IRON AND STEEL (kg)	(N) FRAMES GRATES & COVERS: MH FRAME AND COVER (EA)	CHECKERED PLATE (EA)	TYPE 600-12 (EA)	TYPE 900R (EA)	FLARED END SECTION (AP) (EA)	FLOW METER: TRAPEZOIDAL FLUME (EA)	PARSHALL FLUME (EA)	XXXXX (EA)	XXXXX (EA)	COMPOST FILTER BMP (EA)	OCP MONITORING MANHOLE (EA)	MONITORING MANHOLE (EA)	STAINLESS STEEL MONITORING WELL (EA)	INFILTRATION TRENCH BMP (EA)	CL GATE (EA)	50 mm PLASTIC CONDUIT (m)
a																			
b																			
c																			
d																			
e									1										
f																			
g									1										
h																			
i																			
j																			29
k																			8
SHEET TOTAL									2										37

DRAINAGE UNIT	AP 150 mm (m)	AP 200 mm (m)	AP 250 mm (m)	AP 300 mm (m)	AP 450 mm (m)	300 mm DIP (m)	BIO-FILTER SWALE BMP (EA)	BIO-FILTER STRIP BMP (EA)	(N) ELBOW (EA)	(N) TEE (EA)	(N) PIPE JOINT CLASSIFICATION	(N) HEIGHT OF INLET 'H' OR 'V' (m)	(N) MAXIMUM COVER (m)
a													
b													
c													
d													
e													
f							1						
g													
h													
i													
j													
k													
SHEET TOTAL							1						

STATE OF CALIFORNIA - DEPARTMENT OF TRANSPORTATION

Caltrans

DRAINAGE QUANTITIES

LAST REVISION

FOR REDUCED PLANS ORIGINAL 0 20 40 60 80

USERNAME => $$$$$$USER$$$$$$

CU 00000

EA 000000

DIST	COUNTY	ROUTE	KILOMETER POST TOTAL PROJECT	SHEET NO	TOTAL SHEETS
11	SD	Var	Var		

REGISTERED CIVIL ENGINEER

PLANS APPROVAL DATE

REGISTERED PROFESSIONAL ENGINEER — No. — CIVIL — STATE OF CALIFORNIA

AGUILAR ENGINEERING INCORPORATED
937 SOUTH VIA LATA
SUITE 500
COLTON, CA 92324

The State of California or its officers or agents shall not be responsible for the accuracy or completeness of electronic copies of this plan sheet.

DRAINAGE SYSTEM No	DRAINAGE UNIT	REMOVE DRAINAGE FACILITY	REMOVE PIPE	REMOVE CONCRETE GUTTER	REMOVE ASPHALT CONCRETE DIKE	REMOVE PAVEMENT	REMOVE ASPHALT CONCRETE	REMOVE TREE	DITCH EXCAVATION	(N) RESET UTILITY	RESET DRAINAGE FACILITY	ASPHALT CONCRETE DIKE	TYPE A1-150 CURB	AGGREGATE BASE (CLASS II)	ASPHALT CONCRETE (TYPE B)	PLACE AC (MISC AREA)	MINOR CONCRETE (MINOR STRUCTURE)	MINOR CONCRETE (MISC CONST)	TYPE I SAND FILTER BMP	TYPE II SAND FILTER BMP	MISCELLANEOUS IRON AND STEEL	(N) FRAMES GRATES & COVERS: MH FRAME AND COVER	CHECKERED PLATE	TYPE 600-12	TYPE 900R	FLARED END SECTION (AP)	FLOW METER: TRAPEZOIDAL FLUME	PARSHALL FLUME	XXXXX	XXXXX	COMPOST FILTER BMP	OCP MONITORING MANHOLE	MONITORING MANHOLE	STAINLESS STEEL MONITORING WELL	INFILTRATION TRENCH BMP	CL GATE	50 mm PLASTIC CONDUIT	AP: 150 mm	200 mm	250 mm	300 mm	450 mm	300 mm DIP	BIO-FILTER SWALE BMP	BIO-FILTER STRIP BMP	(N) ELBOW	(N) TEE	(N) PIPE JOINT CLASSIFICATION	(N) HEIGHT OF INLET "H" OR "V"	(N) MAXIMUM COVER	DESCRIPTION	NORTHING/EASTING (OR STATION)	DRAINAGE PLAN SHEET No	DRAINAGE SYSTEM No	DRAINAGE UNIT
		EA	m	LS	m	m3	LS	EA	m2	EA	EA	m	m	TONN	TONN	m2	m3	m3	EA	EA	kg	EA	EA	EA	EA	EA	EA	EA	EA	EA	EA	EA	EA	EA	EA	EA	EA	m	m	m	m	m	m	EA	EA	EA	EA		m	m				
7	a																	3.24																																		CONCRETE SWALE	606318.6683/900332.9690	8	7	a
	a																	0.54																																		CONCRE PAD	606321.1755/900305.1004			b
	a																									1																										50 mm 45° WSC (TRAPEZOIDAL) FLUME	606318.9190/900308.1167			c
	a																																1																			100 mm PPP OUTFLOW MONITING WELL	606318.7876/900310.0991			d
	a																																	1																		INFILTRATION TRENCH BMP	606316.3773/900357.0723			e
	a																										1																									PARSHALL FLUME (75 mm TRROAT)	606317.7141/900360.3884			f
	a																	0.54																																		CONCRETE PAD	606314.5048/900364.1111			g
	a																	1.08																																		CONCRETE SWALE	606320.2870/900363.3490			h
																																				4																PLASTIC PIPE	606314.5048/900364.1111			i
																																				4																PLASTIC PIPE	606321.1755/900305.1004			i
								1						254	127																																					REMOVE TREE		13		
										1																																										75 MM AC/150 MM AB				
						115								160	80																																					RESET SEWER VAULT				
				1			1																																													REMOVE & REPLACE 750 mm AC/150 mm AB				
					68																																															REMOVE AC & CONC GUTTER				
													68																																							REMOVE AC DIKE				
																																																				CONCRETE CURB				
		68	15										68	4	4	207		5.40																		8																SHEET TOTAL				

STATE OF CALIFORNIA - DEPARTMENT OF TRANSPORTATION

DATE | REVISED BY | DATE REVISED

CALCULATED/DESIGNED BY | CHECKED BY

PROJECT ENGINEER

DRAINAGE QUANTITIES D-29

FOR REDUCED PLANS ORIGINAL 0 20 40 60 80 | USERNAME => $$$$$$$USER$$$$$$$

DIST	COUNTY	ROUTE	KILOMETER POST TOTAL PROJECT	SHEET No	TOTAL SHEETS
11	SD	Var	Var		

REGISTERED CIVIL ENGINEER

PLANS APPROVAL DATE

REGISTERED PROFESSIONAL ENGINEER No. CIVIL STATE OF CALIFORNIA

The State of California or its officers or agents shall not be responsible for the accuracy or completeness of electronic copies of this plan sheet.

Caltrans Metric

LEGEND

- TEMP K-RAIL
- INSTALL TEMPORARY WARNING SIGN AND POST
- INSTALL DELINEATOR AT 15m INTERVAL
- INSTALL ARRAY "TJ" CRASH CUSHION

QUANTITY

TEMP K-RAIL	= 60 m
C24 (1200mmX1200mm)	= 1 EA
"SHOULDER CLOSED" SIGN (900mm X 900mm)	= 1 EA
POST (150mm X 150mm)	= 2 EA
ARRAY "TJ" CRASH CUSHION	= 1 EA
DELINEATOR	= 8 EA

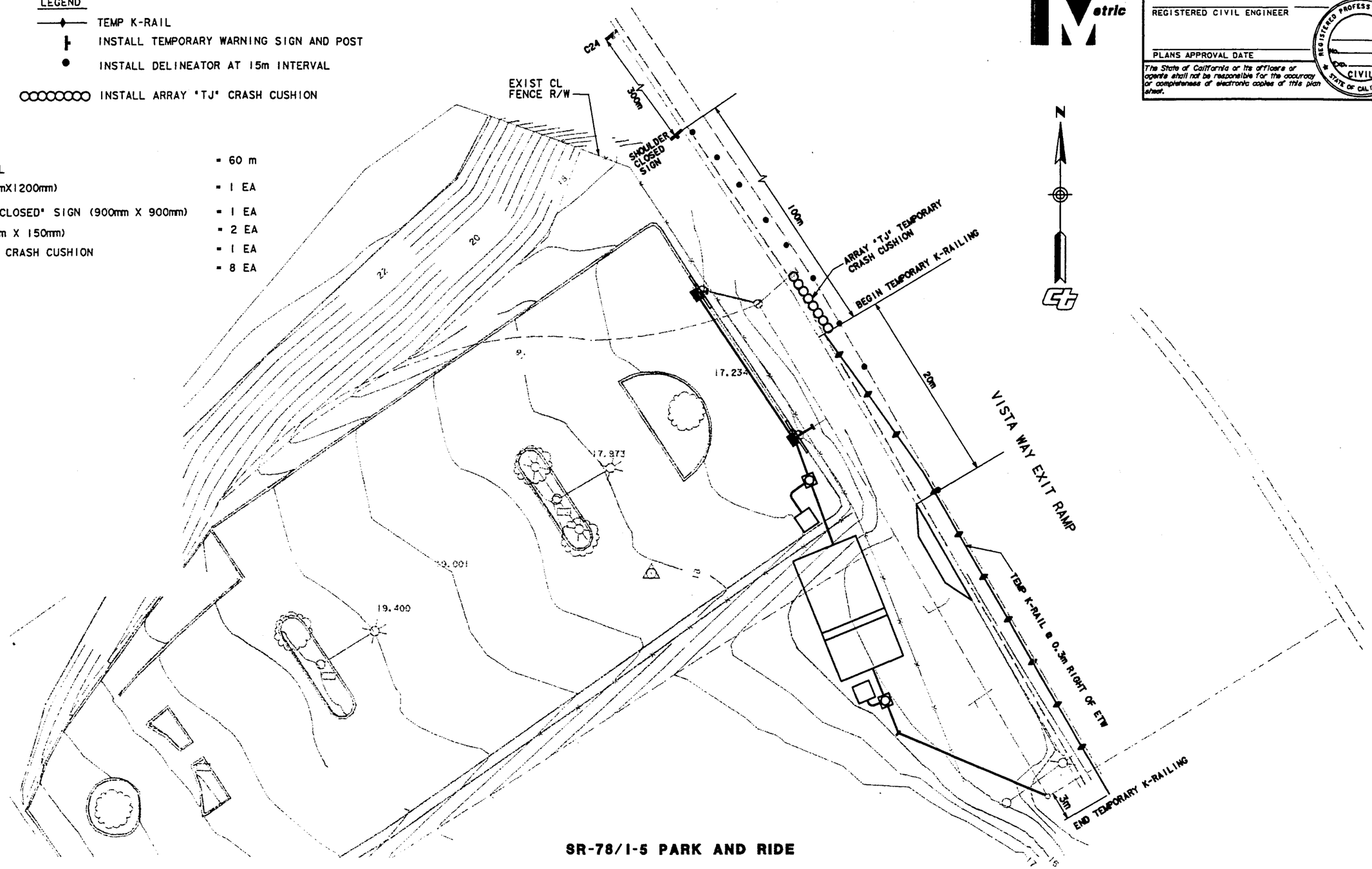

SR-78/I-5 PARK AND RIDE

TRAFFIC HANDLING PLAN
LOCATION 4

SCALE 1 : 200

TH-1

DATE	REVISED BY	DATE REVISED

CALCULATED/DESIGNED BY

CHECKED BY

PROJECT ENGINEER

STATE OF CALIFORNIA - DEPARTMENT OF TRANSPORTATION

Caltrans

15 MAR 98 19:3 qr\57704\34358\dgn\dlv\thl.dlv

FOR REDUCED PLANS ORIGINAL 0 20 40 60 80

DIST	COUNTY	ROUTE	TOTAL PROJECT	SHEET No	TOTAL SHEETS
11	SD	Var	Var		

REGISTERED CIVIL ENGINEER

PLANS APPROVAL DATE

The State of California or its officers or agents shall not be responsible for the accuracy or completeness of electronic copies of this plan sheet.

REGISTERED PROFESSIONAL ENGINEER — NO. — EXP. — CIVIL — STATE OF CALIFORNIA

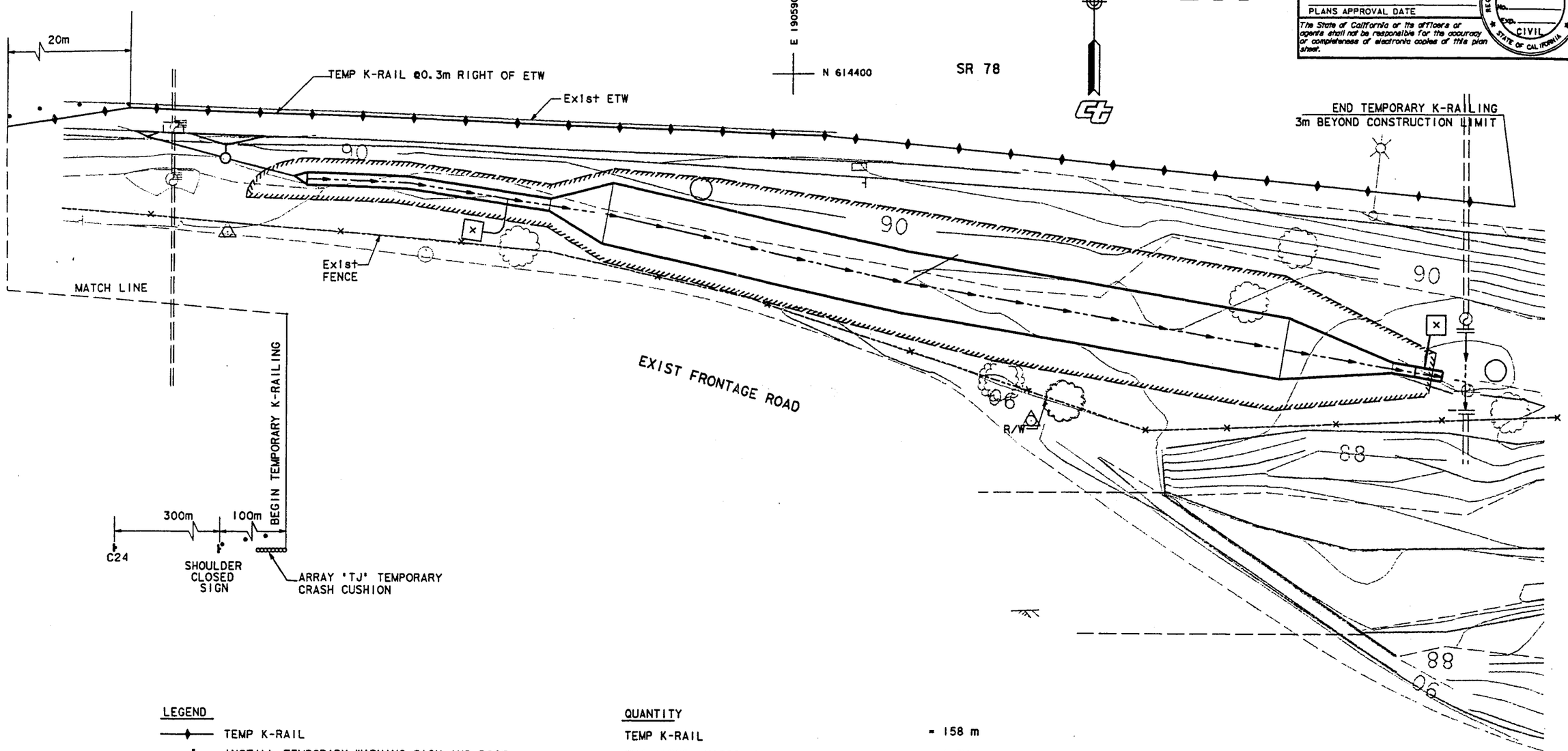

LEGEND

- TEMP K-RAIL
- INSTALL TEMPORARY WARNING SIGN AND POST
- INSTALL DELINEATOR AT 15m INTERVAL
- INSTALL ARRAY 'TJ' TEMPORARY CRASH CUSHION

QUANTITY

TEMP K-RAIL	= 158 m
C24 (1200mmX1200mm)	= 1 EA
'SHOULDER CLOSED' SIGN (900mm X 900mm)	= 1 EA
POST (150mm X 150mm)	= 2 EA
ARRAY 'TG' CRASH CUSHION	= 1 EA
DELINEATOR	= 8 EA

TRAFFIC HANDLING PLAN
LOCATION 5

SCALE 1 : 200

TH-2

DATE	REVISED BY	DATE REVISED
	CALCULATED/DESIGNED BY	
	CHECKED BY	
	PROJECT ENGINEER	

STATE OF CALIFORNIA - DEPARTMENT OF TRANSPORTATION

Caltrans

FOR REDUCED PLANS ORIGINAL SCALE IS IN MILLIMETERS 0 20 40 60 80

USERNAME => $USER
DGN FILE => $REQUEST

CU 00000

EA 000000

DIST	COUNTY	ROUTE	KILOMETER POST TOTAL PROJECT	SHEET No	TOTAL SHEETS
11	SD	Var	Var		

REGISTERED CIVIL ENGINEER

PLANS APPROVAL DATE

REGISTERED PROFESSIONAL ENGINEER CIVIL STATE OF CALIFORNIA

The State of California or its officers or agents shall not be responsible for the accuracy or completeness of electronic copies of this plan sheet.

Metric

LEGEND

TEMP K-RAIL

INSTALL TEMPORARY WARNING SIGN AND POST

QUANTITY

TEMP K-RAIL	=	293 m
C22-B (900mmX9100mm)	=	1 EA
POST(150 mm X 150 mm)	=	1 EA

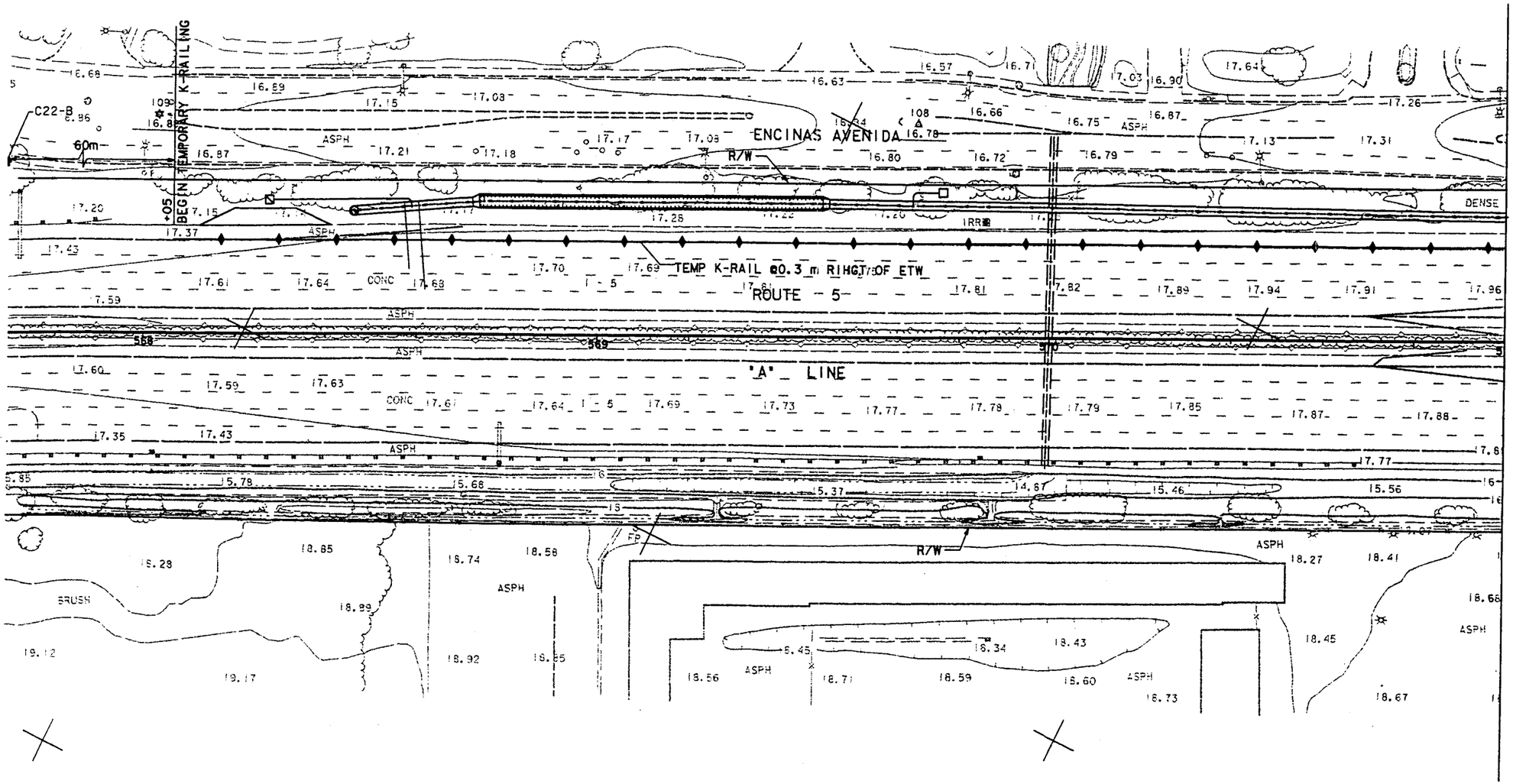

TRAFFIC HANDLING PLAN
LOCATION 6

SCALE 1 : 500

TH-3

DATE	REVISED BY	DATE REVISED

CALCULATED/DESIGNED BY

CHECKED BY

PROJECT ENGINEER

STATE OF CALIFORNIA - DEPARTMENT OF TRANSPORTATION

Caltrans

5 MAR 98 18:06:3 57704\34358\dgn\div\th3.div

REVISION 00-00 DATE PLOTTED => @DATE TIME PLOTTED => @TIME

DIST	COUNTY	ROUTE	KILOMETER POST TOTAL PROJECT	SHEET No	TOTAL SHEETS
11	SD	Var	Var		

REGISTERED CIVIL ENGINEER

PLANS APPROVAL DATE

The State of California or its officers or agents shall not be responsible for the accuracy or completeness of electronic copies of this plan sheet.

REGISTERED PROFESSIONAL ENGINEER No. Exp. CIVIL STATE OF CALIFORNIA

Caltrans Metric

LEGEND

- TEMP K-RAIL
- INSTALL TEMPORARY WARNING SIGN AND POST
- INSTALL DELINEATOR AT 15m INTERVAL
- INSTALL ARRAY 'TG' CRASH CUSHION

QUANTITY

TEMP K-RAIL	= 203 m
C24 (1200mmX1200mm)	= 1 EA
'SHOULDER CLOSED' SIGN (900mm X 900mm)	= 1 EA
POST (150mm X 150mm)	= 2 EA
ARRAY 'TG' CRASH CUSHION	= 1 EA
DELINEATOR	= 8 EA

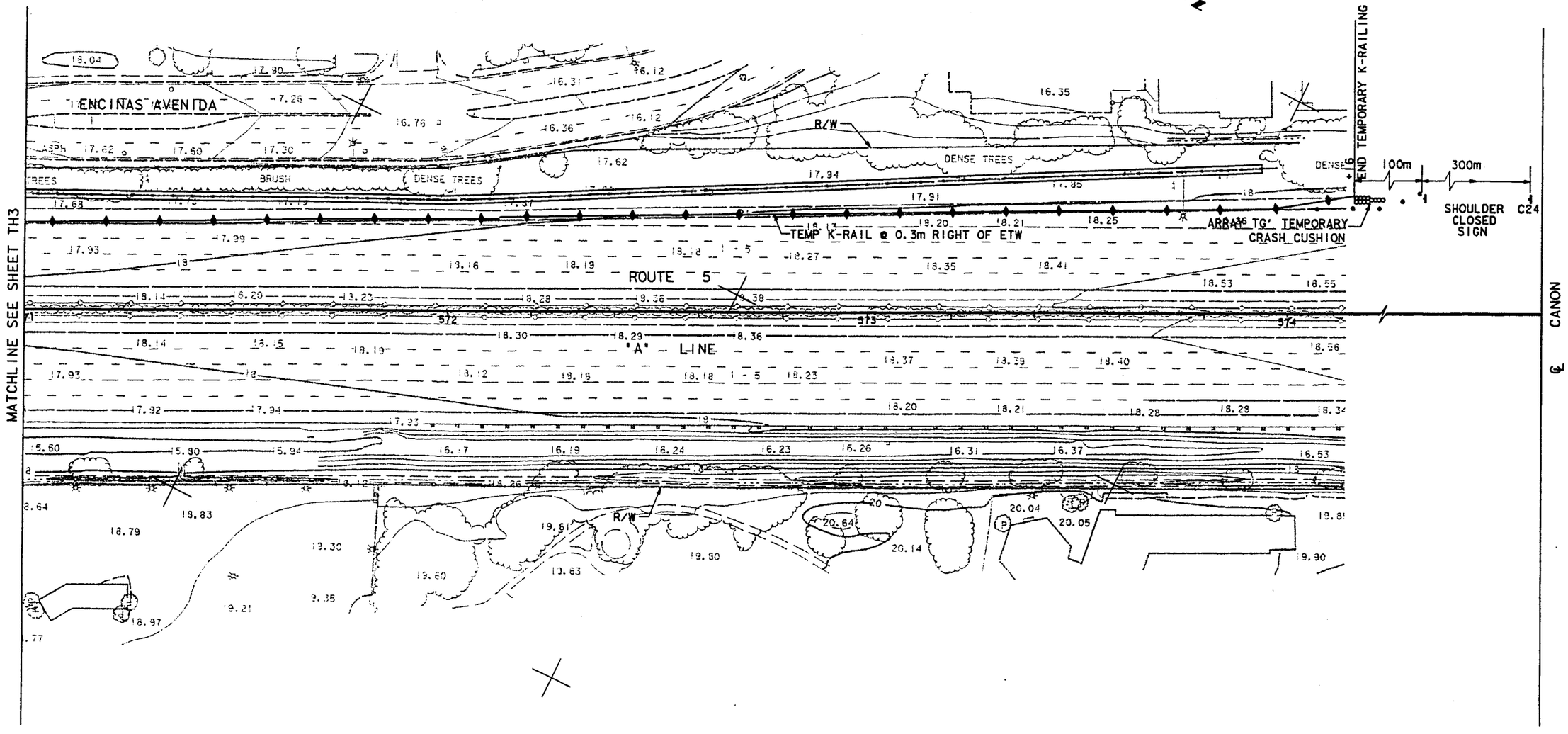

TRAFFIC HANDLING PLAN
LOCATION 6

SCALE 1 : 500

TH-4

STATE OF CALIFORNIA - DEPARTMENT OF TRANSPORTATION

Caltrans

PROJECT ENGINEER

CALCULATED/DESIGNED BY | CHECKED BY | DATE | REVISED BY | DATE REVISED

15 MAR 98 18. 39 q:\57704\34358\dgn\div\th4.div

FOR REDUCED PLANS ORIGINAL SCALE IS IN MILLIMETERS 0 20 40 60 80

USERNAME => $USER

CU 00000 | EA 000000

LAST REVISION

DIST	COUNTY	ROUTE	KILOMETER POST TOTAL PROJECT	SHEET No	TOTAL SHEETS
11	SD	Var	Var		

REGISTERED ELECTRICAL ENGINEER

PLANS APPROVAL DATE

The State of California or its officers or agents shall not be responsible for the accuracy or completeness of electronic copies of this plan sheet.

REGISTERED PROFESSIONAL ENGINEER — ARTURO T. BARRENO — No. 11800 — Exp. 9-30-00 — ELECTRICAL — STATE OF CALIFORNIA

Caltrans Metric

LOAD SCHEDULE

PANEL PPA IN NEMA 3R ENCL. 120/208 VOLTS 1 PH 3 WIRE 10 KAIC

LOCATION OUTDOOR 125 AMPS BUS 40AT, 2P MAIN SURFACE MOUNTED

REMARKS	LOAD (WATTS) L1	LOAD (WATTS) L2	OUTLETS OTHER	OUTLETS REC	OUTLETS LTG	CIR NO	ALL BREAKERS 20 AMPERES EXCEPT AS NOTED	CIR NO	OUTLETS LTG	OUTLETS REC	OUTLETS OTHER	LOAD (WATTS) L1	LOAD (WATTS) L2	REMARKS
ONFLOW MON.	1800					1		2				-		SPARE
INFLOW MON.		1800				3		4					-	SPARE
	1800	1800										-	-	

= 1 POLE
= 2 POLE

TOTAL CONNECTED LOAD 1800VA(L1) 1800VA(L2) = 3600VA
@120/208V, 1Ø = 17.3AMPS

NOTES:

1. EXISTING PANEL BOARD A, 100A, 120/208V, 3Ø, 4W
   MAIN: 100A, 3P CB
   BRANCHES: (1) 3P-40A CB
   (19) 1P-20A CB
   (5) 1P-15A CB
   ADD: (1) 2P-40A CB, CKT 27, 29 (FOR PNL PPA)
   (FOR SINGLE LINE DIAGRAM, PANEL ELEVATION. SEE DWG. E-5)
2. INSTALL PANEL BOARD PPA IN NEMA 3R ENCLOSURE
   (1) 2P-40A CB (MAIN)
   (1) 1P-20A CB (ONFLOW MONITORING)
   (1) 1P-20A CB (INFLOW MONITORING)
   (2) 1P-20A CB (SPARE)
3. INSTALL PULL BOX NO. 3½ (FOR DETAIL SEE STD. PLAN ES-8)

CONDUIT & WIRE NOTES:

1. 41RSC, 3*8 THW CU & 1*10 GRD
   L=50m (164') VD=2.08%
2. 40PVC, 3*8 THW CU & 1*10 GRD
   L=50m (164') VD=2.08%
3. 41RSC, 2*10 THW CU & 1*10 GRD
   L=25m (82') VD=2.48%
4. 40PVC, 2*12 THW CU & 1*12 GRD

ABBREVIATIONS:

RSC - RIGID STEEL CONDUIT
PVC - POLYVINYL CHLORIDE
(E) - EXISTING
CB - CIRCUIT BREAKER
ECB - ENCLOSED CIRCUIT BREAKER
CU - COPPER
L - LENGTH
VD - VOLTAGE DROP
GRD - GROUND
AT - AMPERE TRIP

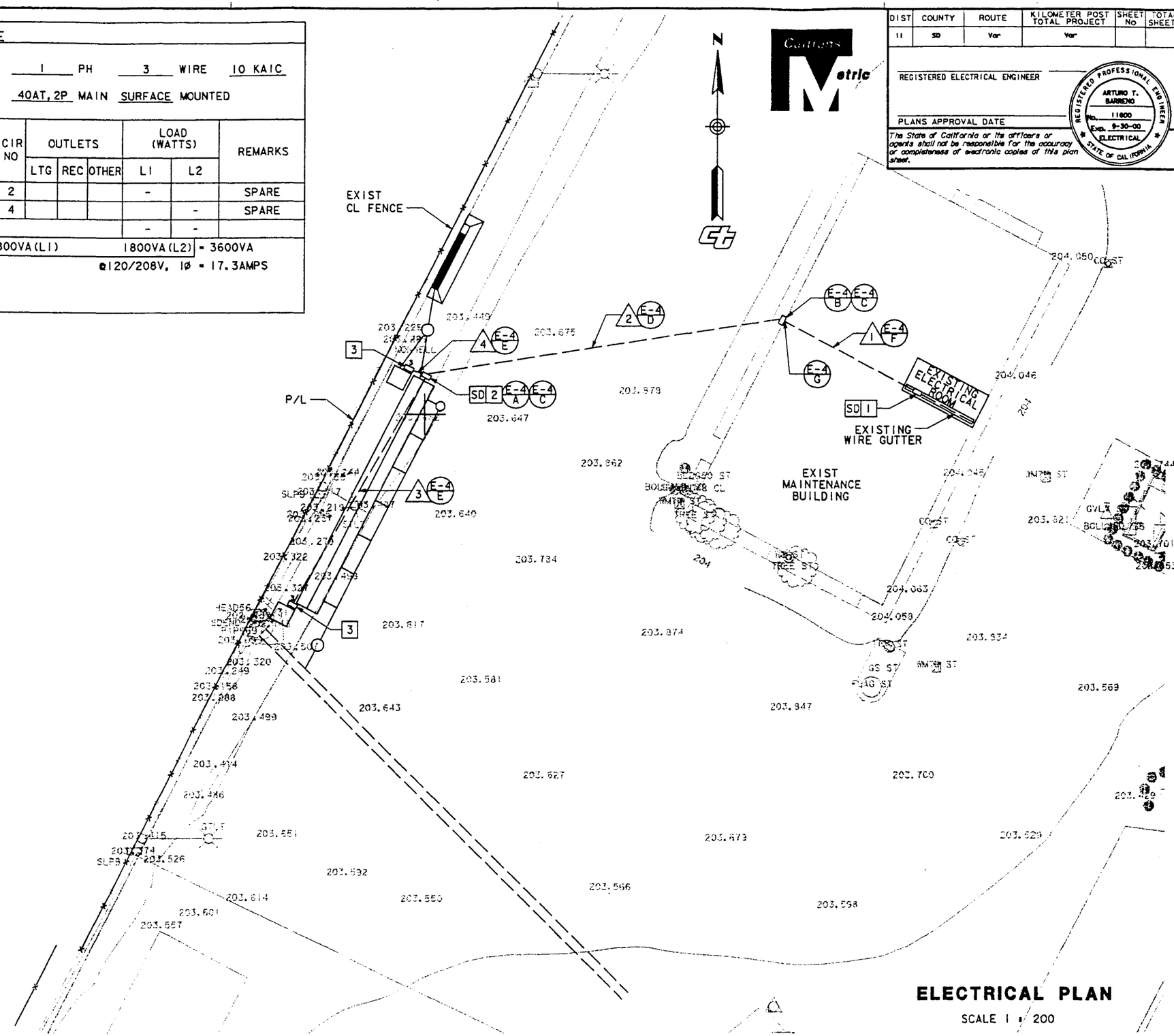

ELECTRICAL PLAN

SCALE 1" = 200'

ESCONDIDO MAINTENANCE STATION

E-1

STATE OF CALIFORNIA - DEPARTMENT OF TRANSPORTATION

PROJECT ENGINEER | CALCULATED/DESIGNED BY | CHECKED BY | DATE | REVISED BY | DATE REVISED

FOR REDUCED PLANS ORIGINAL 0 20 40 60 80

DIST	COUNTY	ROUTE	KILOMETER POST TOTAL PROJECT	SHEET No	TOTAL SHEETS
11	SD	Var	Var		

REGISTERED ELECTRICAL ENGINEER

PLANS APPROVAL DATE

REGISTERED PROFESSIONAL ENGINEER ARTURO T. BARRENO No. 11600 Exp. 9-30-00 ELECTRICAL STATE OF CALIFORNIA

The State of California or its officers or agents shall not be responsible for the accuracy or completeness of electronic copies of this plan sheet.

Caltrans Metric

LOAD SCHEDULE

PANEL PPA IN NEMA 3R ENCL. 120/240 VOLTS 1 PH 3 WIRE 10KAIC

LOCATION OUTDOOR 125 AMPS BUS 40AT, 2P MAIN SURFACE MOUNTED

REMARKS	LOAD (WATTS) L1	LOAD (WATTS) L2	OUTLETS OTHER	OUTLETS REC	OUTLETS LTG	CIR NO	ALL BREAKERS 20 AMPERES EXCEPT AS NOTED	CIR NO	OUTLETS LTG	OUTLETS REC	OUTLETS OTHER	LOAD (WATTS) L1	LOAD (WATTS) L2	REMARKS
ONFLOW MON.	1800					1		2				-		SPARE
INFLOW MON.		1800				3		4					-	SPARE
	1800	1800										-	-	

TOTAL CONNECTED LOAD 1800VA(L1) 1800VA(L2) = 3600VA

@120/240V, 1Ø = 15.0AMPS

= 1 POLE

= 2 POLE

NOTES:

1. EXISTING TYPE III SERVICE ENCLOSURE CABINET S.D.G.&E. METER NO. 510146, 120/240V, 1Ø WITH: 2P-100A CB (MAIN) ADD: 2P-40A CB (FOR PNL PPA)
2. NEW PANEL BOARD PPA IN NEMA 3R ENCLOSURE
   (1) 2P-40A CB (MAIN)
   (1) 1P-20A CB (ONFLOW MONITORING)
   (1) 1P-20A CB (INFLOW MONITORING)
   (2) 1P-20A CB (SPARE)
3. INSTALL PULL BOX NO. 3/2 (FOR DETAIL SEE STD. PLAN ES-8)
4. INSTALL PULL BOX NO. 3/2 (T) (FOR DETAIL SEE STD. PLAN ES-8)

CONDUIT & WIRE NOTES:

1. 40PVC, 3*6 THW CU & 1*10 GRD L=130m (426') VD=2.61%
2. 40PVC, 2*10 THW CU & 1*10 GRD L=25m (82') VD=2.4%
3. 40PVC, 2*12 THW CU & 1*12 GRD

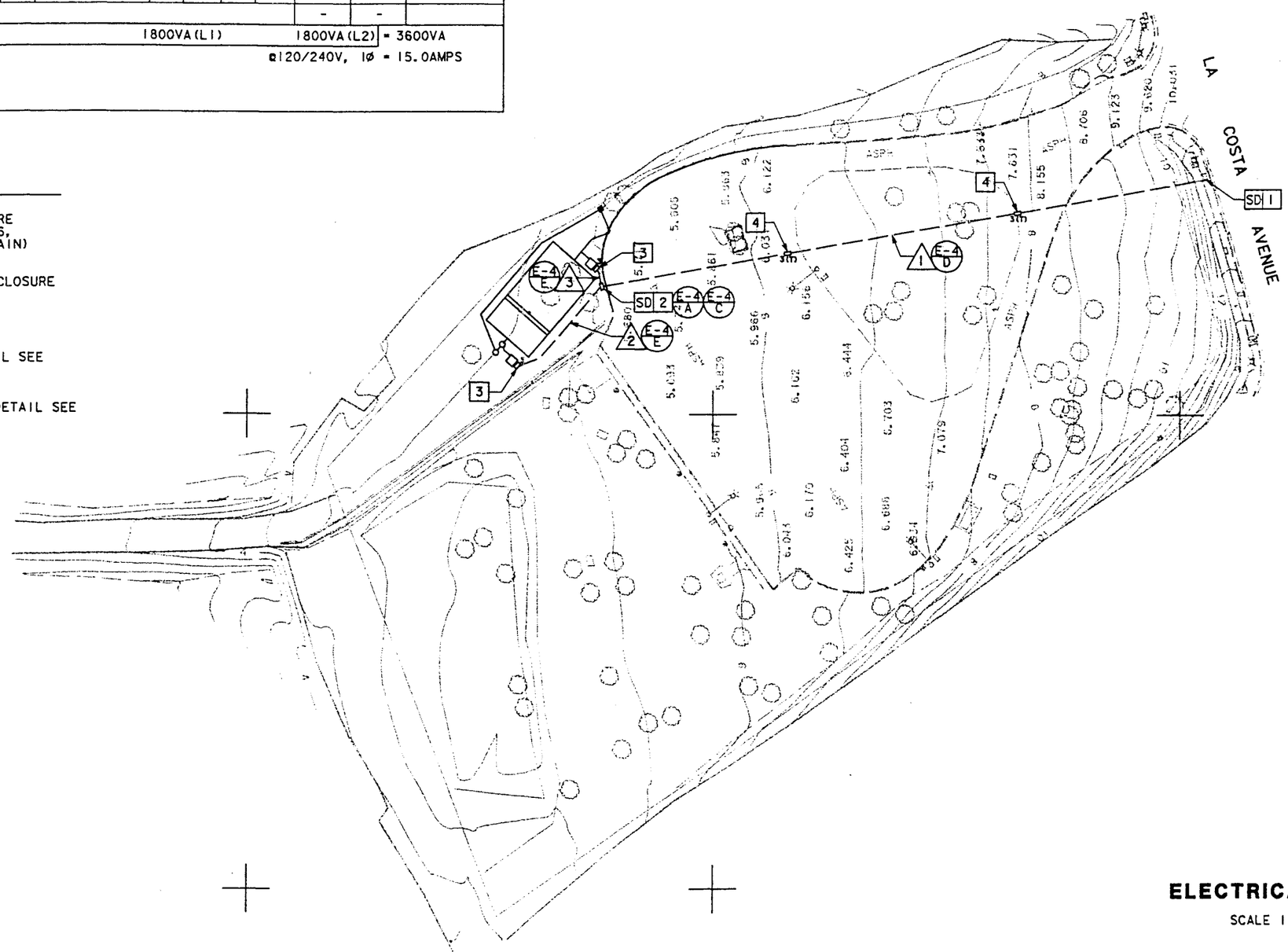

ELECTRICAL PLAN

SCALE 1 : 500

E-2

LA COSTA AVE PARK AND RIDE

STATE OF CALIFORNIA - DEPARTMENT OF TRANSPORTATION

Caltrans

PROJECT ENGINEER | CALCULATED/DESIGNED BY | CHECKED BY | DATE | REVISED BY | DATE REVISED

FOR REDUCED PLANS ORIGINAL SCALE IS IN MILLIMETERS 0 20 40 60 80

USERNAME => $USER

DATE$ $TIME$ $FILE$

LOAD SCHEDULE

PANEL PPA IN NEMA 3R ENCL 120/208 VOLTS 1 PH 3 WIRE 10KAIC

LOCATION OUTDOOR 125 AMPS BUS 40AT, 2P MAIN SURFACE MOUNTED

REMARKS	LOAD (WATTS) L1	LOAD (WATTS) L2	OUTLETS OTHER	OUTLETS REC	OUTLETS LTG	CIR NO	ALL BREAKERS 20 AMPERES EXCEPT AS NOTED	CIR NO	OUTLETS LTG	OUTLETS REC	OUTLETS OTHER	LOAD (WATTS) L1	LOAD (WATTS) L2	REMARKS
ONFLOW MON.	1800					1		2				-		SPARE
INFLOW MON.		1800				3		4					-	SPARE
	1800	1800										-	-	

= 1 POLE

= 2 POLE

TOTAL CONNECTED LOAD 1800VA(L1) 1800VA(L2) = 3600VA

@120/208V, 1Ø = 17.3AMPS

NOTES:

1. EXISTING PANEL @ BLOCK OIL HOUSE ADD 1-40A, 2P 208V CB
2. NEW PANEL BOARD PPA IN NEMA 3R ENCLOSURE
   (1) 2P-40A CB (MAIN)
   (1) 1P-20A CB (ONFLOW MONITORING)
   (1) 1P-20A CB (INFLOW MONITORING)
   (2) 1P-20A CB (SPARE)
3. INSTALL PULL BOX NO. 3½ (FOR DETAIL SEE STD. PLAN ES- 8
4. PROVIDE SEAL OFFS AT CONDUIT ENTRIES TO PANELS.

CONDUIT & WIRE NOTES:

1. 41RSC, 3#8 THW & 1#10 GRD L=35m (115') VD=1.49%
2. 40PVC, 2#8 THW & 1#10 GRD L=30m (98') VD=1.9%

WHERE: L=LENGTH OF WIRE
VD=VOLTAGE DROP

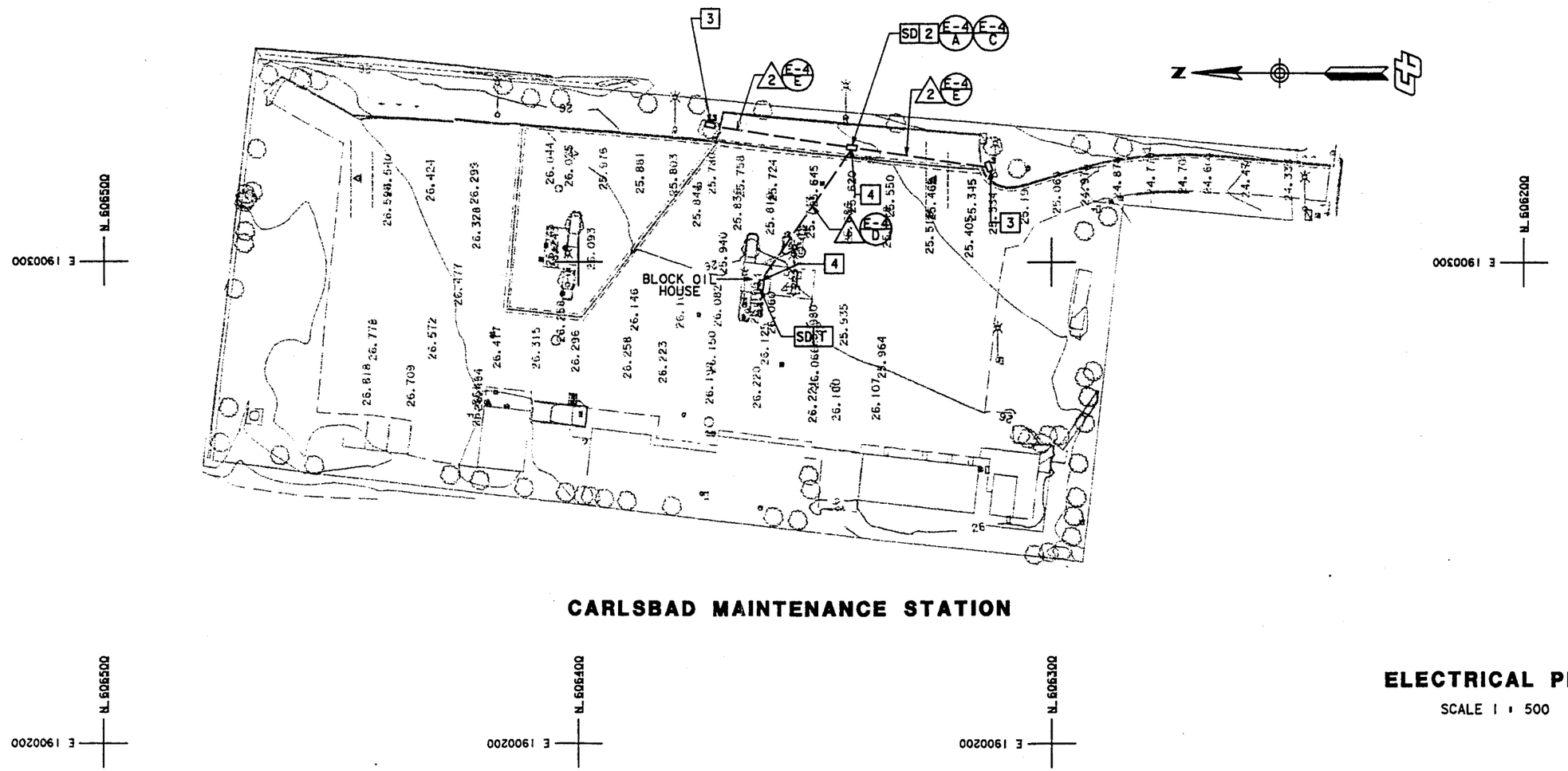

CARLSBAD MAINTENANCE STATION

ELECTRICAL PLAN

SCALE 1 : 500

E-3

DIST	COUNTY	ROUTE	KILOMETER POST TOTAL PROJECT	SHEET NO	TOTAL SHEETS
11	SD	Var	Var		

REGISTERED ELECTRICAL ENGINEER

PLANS APPROVAL DATE

The State of California or its officers or agents shall not be responsible for the accuracy or completeness of electronic copies of this plan sheet.

REGISTERED PROFESSIONAL ENGINEER ARTURO T. BARRENO No. 11600 Exp. 9-30-00 ELECTRICAL STATE OF CALIFORNIA

DATE	REVISED BY	DATE REVISED

CALCULATED/DESIGNED BY	CHECKED BY

PROJECT ENGINEER

STATE OF CALIFORNIA - DEPARTMENT OF TRANSPORTATION

Caltrans

15 MAR 98 16:5..1 q:\57704\34358\dgn\div\e03.div

FOR REDUCED PLANS ORIGINAL SCALE IS IN MILLIMETERS 0 20 40 60 80

USERNAME => $USER
DGN FILE => $REQUEST

CU 00000 EA 000000

DIST	COUNTY	ROUTE	KILOMETER POST TOTAL PROJECT	SHEET No	TOTAL SHEETS
11	SD	Var	Var		

REGISTERED ELECTRICAL ENGINEER

PLANS APPROVAL DATE

REGISTERED PROFESSIONAL ENGINEER ARTURO T. BARRIENTO No. 11600 Exp. 9-30-00 ELECTRICAL STATE OF CALIFORNIA

The State of California or its officers or agents shall not be responsible for the accuracy or completeness of electronic copies of this plan sheet.

Metric

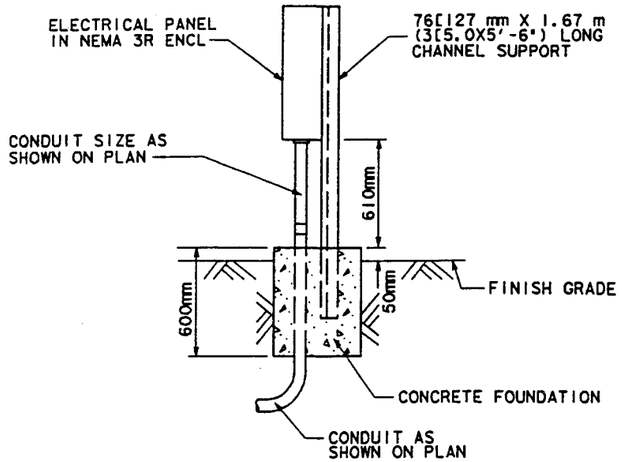

A ELECTRICAL PANEL MOUNTING SUPPORT

NOT TO SCALE

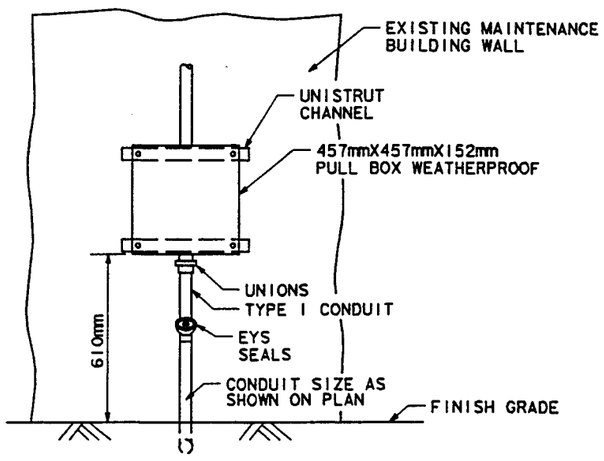

B PULL BOX MOUNTING DETAIL

NOT TO SCALE

PULL BOX NOTES:

1. EQUIP METAL PULL BOX EXPOSED TO WEATHER WITH WEATHER PROOF REMOVBLE COVER.
2. USE THREADED WATERTIGHT HUBS FOR TOP ENTRY.
3. USE KNOCKOUT FOR BOTTOM ENTRY ONLY.

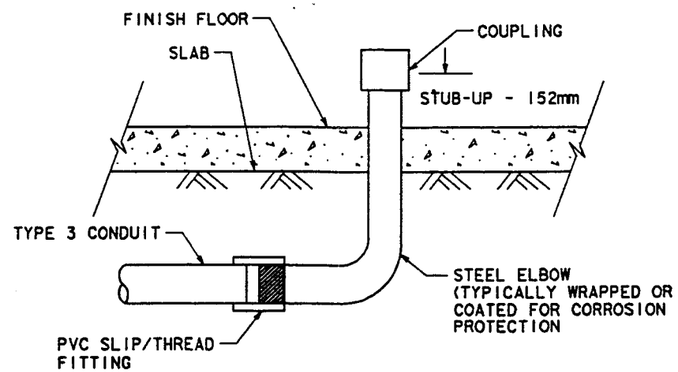

C STEEL ELBOW THRU FLOOR DETAIL

NOT TO SCALE

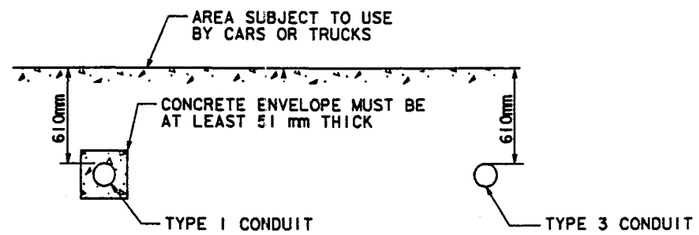

D TYPICAL UNDERGROUND CONDUIT INSTALLATION

NOT TO SCALE

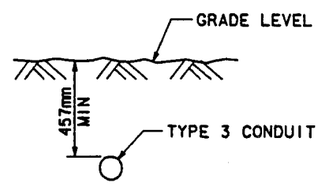

E TYPICAL UNDERGROUND CONDUIT INSTALLATION (UNPAVED AREA)

NOT TO SCALE

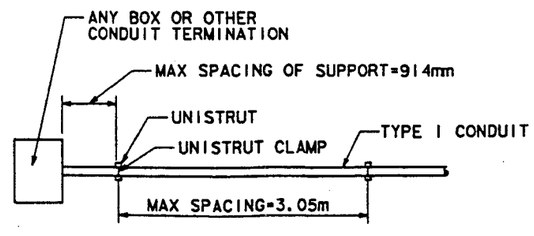

F SUPPORT SPACING TO STRUCTURAL MEMBERS

NOT TO SCALE

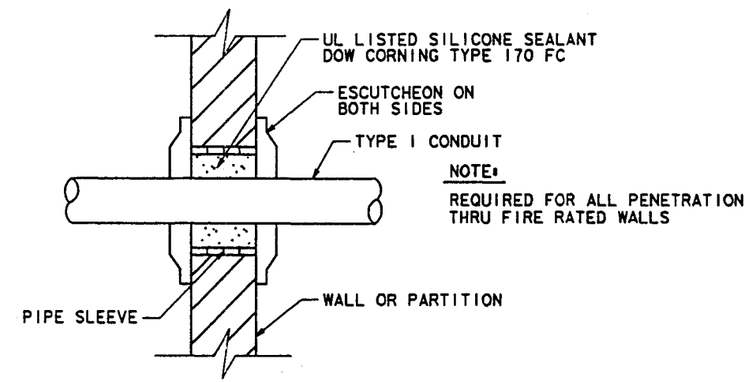

NOTE:

REQUIRED FOR ALL PENETRATION THRU FIRE RATED WALLS

G FIRE STOP DETAIL

NOT TO SCALE

ELECTRICAL DETAILS

NOT TO SCALE

E-4

DATE	REVISED BY	DATE REVISED

CALCULATED/DESIGNED BY | CHECKED BY

PROJECT ENGINEER

STATE OF CALIFORNIA - DEPARTMENT OF TRANSPORTATION

Caltrans

15 MAR 98 17:02:... qr\57704\34358\dgn\div\e04.div

FOR REDUCED PLANS ORIGINAL 0 20 40 60 80

LAST REVISION

DIST	COUNTY	ROUTE	KILOMETER POST TOTAL PROJECT	SHEET No	TOTAL SHEETS
11	SD	Var	Var		

REGISTERED ELECTRICAL ENGINEER

PLANS APPROVAL DATE

REGISTERED PROFESSIONAL ENGINEER — ARTURO T. BARRENO — No. 11600 — Exp. 9-30-00 — ELECTRICAL — STATE OF CALIFORNIA

The State of California or its officers or agents shall not be responsible for the accuracy or completeness of electronic copies of this plan sheet.

Caltrans Metric

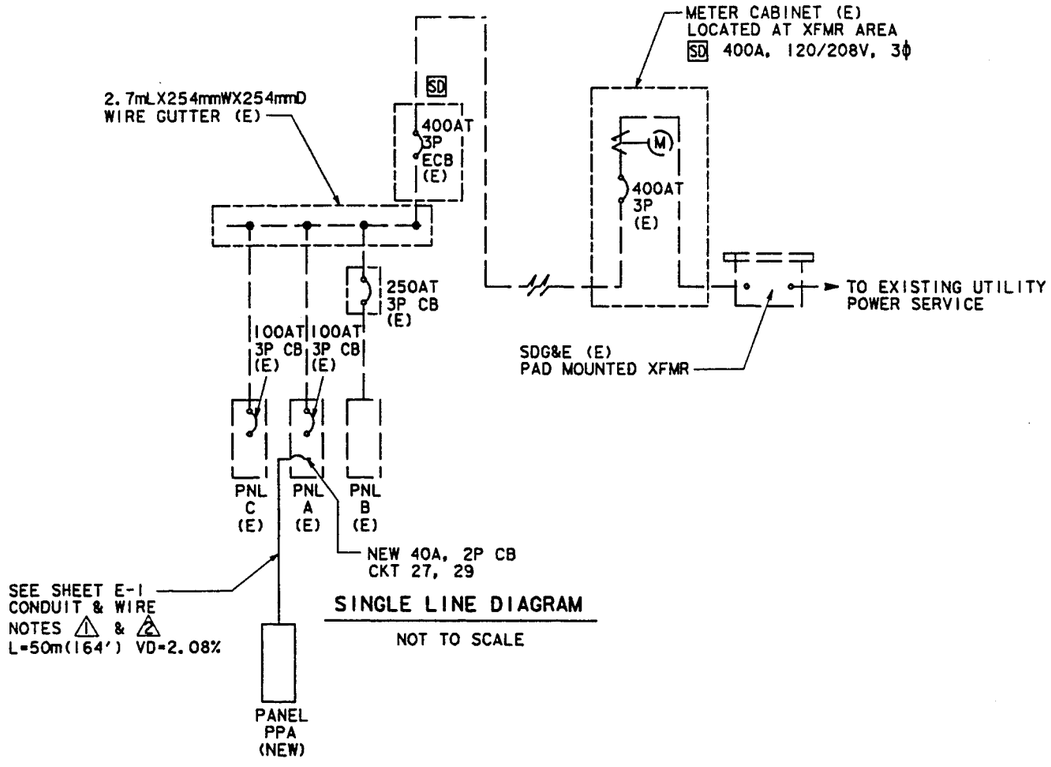

SINGLE LINE DIAGRAM

NOT TO SCALE

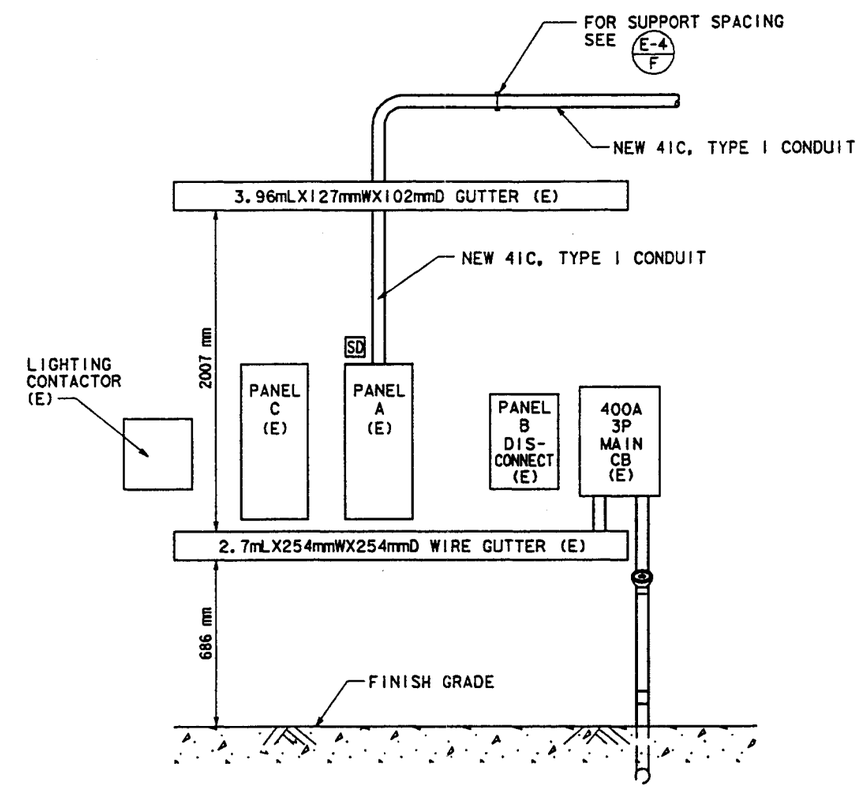

PANEL ELEVATION

NOT TO SCALE

SINGLE LINE DIAGRAM, PANEL ELEVATION & LOAD SCHEDULE

NOT TO SCALE

E-5

DATE	REVISED BY	DATE REVISED

CALCULATED/DESIGNED BY

CHECKED BY

PROJECT ENGINEER

STATE OF CALIFORNIA - DEPARTMENT OF TRANSPORTATION

Caltrans

DATE TIME FILE

FOR REDUCED PLANS ORIGINAL 0 20 40 60 80

USERNAME => #USER

LAST REVISION

PSE Project
District 11

DIST	COUNTY	ROUTE	KILOMETER POST TOTAL PROJECT	SHEET No	TOTAL SHEETS
11	SD	5, 15 56, 78	Var		

INDEX OF SHEETS

SHEET NO	DESCRIPTION
	TITLE AND LOCATION MAP
	STANDARD PLANS LIST
	CONSTRUCTION STAKING AND SURVEY
	KEY MAP AND LINE INDEX
	CONTOUR GRADING AND DRAINAGE
	DRAINAGE PROFILES, DETAILS AND QUANTITIES
	TRAFFIC HANDLING
	SUMMARY OF MISCELLANEOUS QUANTITIES
	DRAINAGE CROSS SECTIONS

STATE OF CALIFORNIA

DEPARTMENT OF TRANSPORTATION

PROJECT PLANS FOR CONSTRUCTION ADJACENT TO STATE HIGHWAY

IN SAN DIEGO COUNTY AT VARIOUS LOCATIONS

To be supplemented by Standard Plans dated July, 1997

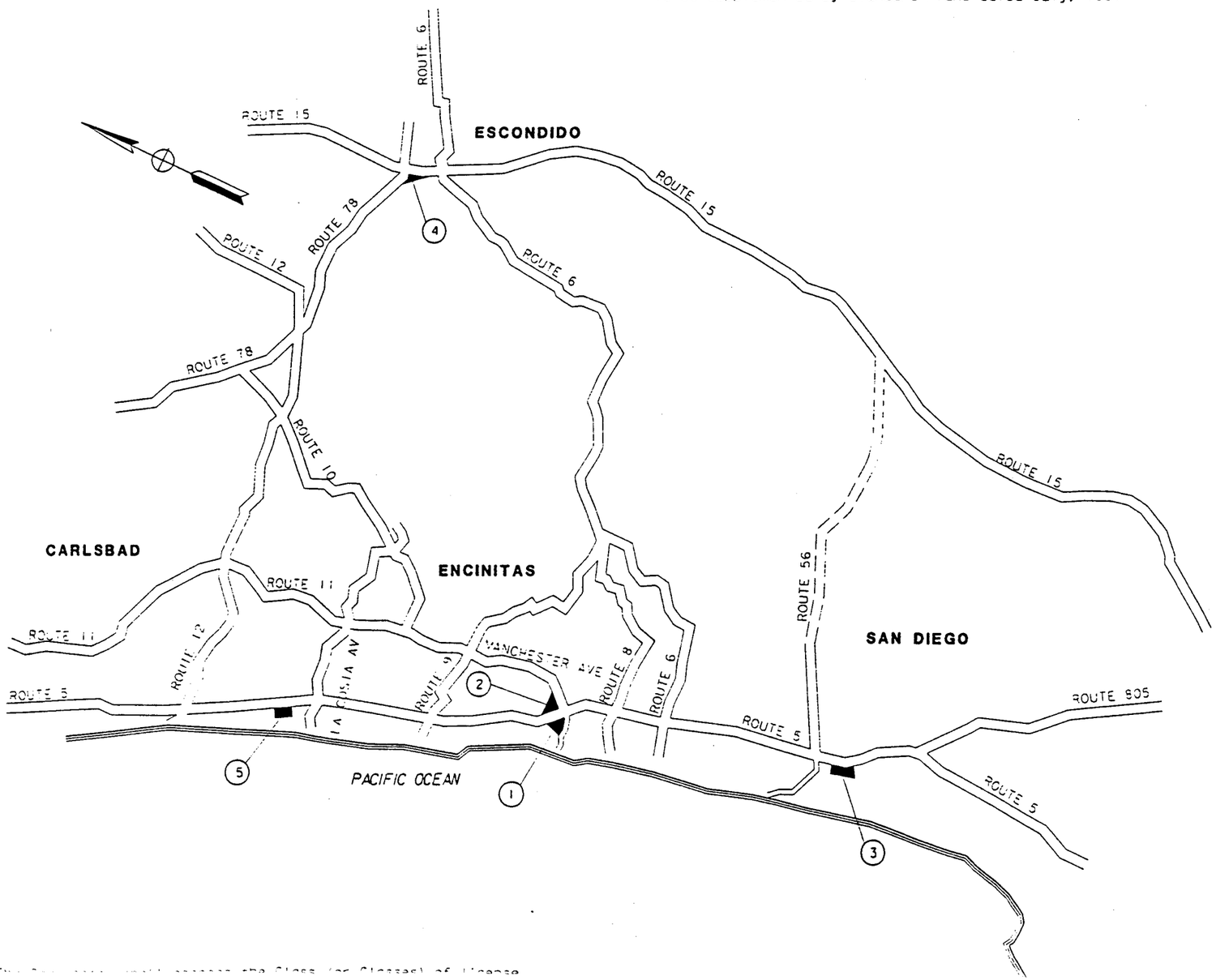

The State of California or its officers or agents shall not be responsible for the accuracy or completeness of electronic copies of this plan sheet.

Caltrans Metric

LOCATION OF CONSTRUCTION

LOC	ROUTE	KP	PM	DESCRIPTION
1	5	52.5	32.6	MANCHESTER AVE SB LOOP ON RAMP
2	5	52.5	32.6	MANCHESTER AVE NB LOOP OFF RAMP
3	5/56	52.9	32.9	I-5/SR-56 JCT WS CONNECTOR
4	78/15	26.6	16.54	SR-78/I-5 JCT ES CONNECTOR
5	5	70.9	44.1	NORTH OF LA COSTA AVE SB EXIT RAMP

03/98
Project Engineer Date
Registered Civil Engineer

REGISTERED PROFESSIONAL ENGINEER
MIKE CHESNEY
No. 48913
Exp. 9-30-00
CIVIL
STATE OF CALIFORNIA

Plans Approval Date

98 14:46:06 g:\grpl\pdata\34358\dgn\div\0title.div
ENGINEER DATE PROJECT MANAGER DATE

DIST.	COUNTY	ROUTE	KILOMETER POST TOTAL PROJECT	SHEET NO.	TOTAL SHEETS
11	SD	VAR	VAR		

Caltrans Metric

The State of California or its officers or agents shall not be responsible for the accuracy or completeness of electronic copies of this plan sheet.

To accompany plans dated _____

GENERAL ROAD WORK

MISCELLANEOUS

- ☐ A10A Abbreviations
- ☐ A10B Symbols
- ☐ A20A Pavement Markers and Traffic Lines, Typical Details
- ■ A20B Pavement Markers and Traffic Lines, Typical Details
- ☐ A20C Pavement Markers and Traffic Lines, Typical Details
- ☐ A20D Pavement Markers and Traffic Lines, Typical Details
- ☐ A24A Pavement Markings- Arrows
- ☐ A24B Pavement Markings- Arrows
- ☐ A24C Pavement Markings- Symbols and Numerals
- ☐ A24D Pavement Markings- Words
- ☐ A24E Pavement Markings- Words and Crosswalks
- ☐ A35A Portland Cement Concrete Paving Details
- ☐ A40 Rumble Strip Details
- ☐ A62A Excavation and Backfill- Miscellaneous Details
- ☐ A62B Limits of Payment for Excavation and Backfill Bridge- Surcharge and Wall
- ☐ A62C Limits of Payment for Excavation and Backfill- Bridge
- ☐ A62D Excavation and Backfill- Concrete Pipe Culverts
- ☐ A62E Excavation and Backfill- Cast-in-Place Reinforced Concrete Box and Arch Culverts
- ☐ A62F Excavation and Backfill- Metal and Plastic Culverts
- ☐ A73A Object Markers
- ■ A73B Markers
- ☐ A73C Delineators, Channelizers and Barricades
- ☐ A74 Survey Monuments
- ☐ A75A Concrete Barrier Type 50
- ☐ A75B Concrete Barrier Type 50F
- ☐ A75D Concrete Headlight Glare Screen
- ☐ A77A Metal Beam Guard Railing
- ☐ A77B Metal Beam Guard Railing- Standard Hardware
- ☐ A77C Metal Beam Guard Railing- Posts and Blocks
- ☐ A77D Guard Rail Flares
- ☐ A77E Guard Rail Flares
- ☐ A77F Metal Beam Guard Railing- Miscellaneous Details
- ☐ A77G Guard Rail End Anchors (Breakaway)
- ☐ A77H Guard Rail End Anchors (Breakaway Hardware)
- ☐ A77I Barrier and Guard Rail End Anchors
- ☐ A77J Guard Rail Connections to Bridge Rails, Retaining Walls and Abutments
- ☐ A77K Guard Rail Connections to Bridge Sidewalks and Curbs
- ☐ A78A Thrie Beam Barrier
- ☐ A78B Thrie Beam Barrier- Standard Hardware and Miscellaneous Details
- ☐ A78C Thrie Beam Barrier- End Anchors
- ☐ A78D Thrie Beam Barrier Connection to Concrete Barrier Type 50
- ☐ A78E Thrie Beam Barrier Connections to Bridge Rails
- ☐ A78F Thrie Beam Barrier Connections to Bridge Curbs, Retaining Walls and Abutments
- ☐ A80 Thrie Beam Barrier Emergency Passageway
- ☐ A81 Crash Cushion, Sand Filled
- ☐ A83 Portable Scale Pad and Approach Slab Details
- ☐ A85 Chain Link Fence
- ☐ A86 Barbed Wire and Wire Mesh Fences
- ■ A87 Curbs, Dikes and Driveways

CRIB WALLS

- ☐ C7A Reinforced Concrete Crib Wall- Battered Wall- Types A, B and C
- ☐ C7B Reinforced Concrete Crib Wall- Battered Wall- Types D, E and F
- ☐ C7C Reinforced Concrete Crib Wall- Vertical Wall- Types A, B and C
- ☐ C7D Reinforced Concrete Crib Wall- Vertical Wall- Types D, E and F
- ☐ C7E Reinforced Concrete Crib Wall- Types A, B, C, D, E and F-Header and Stretcher Details
- ☐ C7F Design Data for Reinforced Concrete Crib Wall Foundation Pressure-Battered Wall
- ☐ C7G Reinforced Concrete Crib Wall Foundation Pressure-Vertical Wall
- ☐ C8A Steel Crib Wall- Construction Details
- ☐ C8B Steel Crib Wall- Design Data
- ☐ C8C Steel Crib Wall- Design Data
- ☐ C9A Timber Crib Wall- Types A, B, C and D
- ☐ C9B Timber Crib Wall- Types A, B, C and D-Design Data

DRAINAGE

- ■ D73 Drainage Inlets
- ☐ D74A Drainage Inlets
- ☐ D74B Drainage Inlets
- ■ D74C Drainage Inlets Details
- ■ D75 Pipe Inlet
- ■ D77A Grate Details
- ■ D77B Bicycle Proof Grate Details
- ☐ D77C Alternative Hinged Cover for Type OL and OS Inlets and Trash Rack for Type OCP Inlet
- ☐ D78 Gutter Depressions
- ☐ D79 Precast Reinforced Concrete Pipe- Direct Design Method
- ☐ D80 Cast-in-Place Reinforced Concrete Single Box Culvert
- ☐ D81 Cast-in-Place Reinforced Concrete Double Box Culvert
- ☐ D82 Cast-in-Place Reinforced Concrete Box Culvert Miscellaneous Details
- ☐ D84 Box Culvert Wingwalls- Types A, B and C
- ☐ D85 Box Culvert Wingwalls- Types D and E
- ☐ D86A Box Culvert Warped Wingwalls
- ☐ D86B Pipe Culvert Headwalls, Endwalls and Warped Wingwalls
- ☐ D86C Arch Culvert Headwalls, Endwalls and Warped Wingwalls
- ☐ D87A Overside Drains
- ■ D87B Overside Drains
- ☐ D87C Underdrains
- ☐ D88 Construction Loads on Culverts
- ☐ D88A Strut Details for Structural Steel Plate Pipes, Arches, and Vehicular Undercrossings
- ■ D89 Pipe Headwalls
- ☐ D90 Pipe Culvert Headwalls, Endwalls and Wingwalls- Types A, B and C
- ☐ D93A Pipe Riser Connections
- ☐ D93B Drainage Inlet Riser Connections
- ☐ D93C Pipe Riser with Debris Rack Cage
- ☐ D94A Metal and Plastic Flared End Sections
- ■ D94B Concrete Flared End Sections
- ☐ D95 Concrete Arch Culverts
- ☐ D97A Corrugated Metal Pipe Coupling Details No. 1- Annular Coupling Band Bar and Strap and Angle Connectors
- ☐ D97B Corrugated Metal Pipe Coupling Details No. 2- Hat Band Coupler and Flange Details
- ☐ D97C Corrugated Metal Pipe Coupling Details No. 3- Helical and Universal Couplers
- ☐ D97D Corrugated Metal Pipe Coupling Details No. 4- Hugger Coupling Bands
- ☐ D97E Corrugated Metal Pipe Coupling Details No. 5- Standard Joint
- ☐ D97F Corrugated Metal Pipe Coupling Details No. 6- Positive Joint
- ☐ D97G Corrugated Metal Pipe Coupling Details No. 7- Positive Joints and Downdrains
- ☐ D97H Reinforced Concrete Pipe or Non-Reinforced Concrete Pipe Standard and Positive Joints
- ☐ D98A Slotted Corrugated Steel Pipe Drain Details
- ☐ D98B Slotted Corrugated Steel Pipe Drain Details
- ☐ D99A Structural Section Drainage System Details
- ☐ D99B Edge Drain Outlet and Vent Details
- ☐ D99C Edge Drain Cleanout and Vent Details
- ☐ D99D Cross Drain Interceptor Details

HIGHWAY PLANTING

- ☐ H1 Planting and Irrigation- Abbreviations
- ☐ H2 Planting and Irrigation- Symbols
- ☐ H3 Planting and Irrigation- Details
- ☐ H4 Planting and Irrigation- Details
- ☐ H5 Planting and Irrigation- Details
- ☐ H6 Planting and Irrigation- Details
- ☐ H7 Planting and Irrigation- Details
- ☐ H8 Planting and Irrigation- Details

TEMPORARY FACILITIES

- ■ T1 Temporary Crash Cushion, Sand Filled
- ■ T2 Temporary Crash Cushion, Sand Filled
- ■ T3 Temporary Railing (Type K)
- ☐ T4 Temporary Traffic Screen
- ☐ T7 Construction Project Funding Identification Signs
- ■ T10 Traffic Control System for Lane Closure on Freeways and Expressways
- ☐ T10A Traffic Control System for Lane and Complete Closures on Freeways and Expressways
- ■ T11 Traffic Control System for Lane Closure on Multilane Conventional Highways
- ☐ T12 Traffic Control System for Lane Closure on Multilane Conventional Highways
- ☐ T13 Traffic Control System for Lane Closure on Two Lane Conventional Highways
- ■ T14 Traffic Control System for Ramp Closures
- ☐ T15 Traffic Control System for Moving Lane Closure on Multilane Highways
- ☐ T16 Traffic Control System for Moving Lane Closure on Multilane Highways
- ☐ T17 Traffic Control System for Moving Lane Closure on Two Lane Highways

BRIDGE

- ☐ B0-1 Bridge Details
- ☐ B0-3 Bridge Details
- ☐ B0-5 Bridge Details
- ☐ B0-13 Bridge Details
- ☐ B2-3 400 mm Cast-in-Drilled-Hole Concrete Pile
- ☐ B2-5 Pile Details- Class 400 and Class 625
- ☐ B2-6 Pile Details- Class 400C and Class 625C
- ☐ B2-8 Pile Details- Class 900 and Class 900C
- ☐ B2-9 Load Test Pile Details (1)
- ☐ B2-10 Load Test Pile Details (2)
- ☐ B2-11 Load Test Pile Details (3)
- ☐ B3-1 Retaining Wall Type 1- H=1200 Through 9100 mm
- ☐ B3-2 Retaining Wall Type 1- H=9700 Through 10 900 mm
- ☐ B3-3 Retaining Wall- Type 1A
- ☐ B3-4 Retaining Wall- Type 2
- ☐ B3-5 Counterfort Retaining Wall- Type 3
- ☐ B3-6 Counterfort Retaining Wall- Type 4
- ☐ B3-7 Retaining Wall- Type 5
- ☐ B3-8 Retaining Wall Details No. 1
- ☐ B3-9 Retaining Wall Details No. 2
- ☐ B3-11 Retaining Wall Type 6- 1829 mm Maximum
- ☐ B6-1 T-Beam Details
- ☐ B6-10 Utility Openings, T-Beam
- ☐ B6-21 Joint Seals (Maximum Movement Rating = 50 mm)
- ☐ B7-1 Box Girder Details
- ☐ B7-5 Deck Drains
- ☐ B7-6 Deck Drains- Type D-1 and D-2
- ☐ B7-10 Utility Opening- Box Girder
- ☐ B7-11 Utility Details
- ☐ B8-5 Cast-in-Place Prestressed Girder Details
- ☐ B11-7 Chain Link Railing
- ☐ B11-47 Cable Railing
- ☐ B11-51 Tubular Hand Railing
- ☐ B11-52 Chain Link Railing Type 7
- ☐ B11-53 Concrete Barrier Type 25
- ☐ B11-54 Concrete Barrier Type 26
- ☐ B13-1 Slope Protection Detail No. 1
- ☐ B13-2 Slope Protection Detail No. 2
- ☐ B14-1 Structural Steel Plate Vehicular Undercrossing
- ☐ B14-3 Communication and Sprinkler Control Conduit (Conduit less than 103 mm Diameter)
- ☐ B14-4 Water Supply Line (Bridge) (Pipe less than NPS 4)
- ☐ B14-5 Water Supply Line (Details) (Pipe less than NPS 4)

SHEET 1 OF 2

STANDARD PLANS LIST

(July, 1995 Edition)

July 3, 1995

AH 98 14:45:05 p:\grpl\pooto\34358\dgn\dir\01sp01.div

DIST.	COUNTY	ROUTE	KILOMETER POST TOTAL PROJECT	SHEET NO.	TO SHEET
11	SD	VAR	VAR		

Caltrans Metric

The State of California or its officers or agents shall not be responsible for the accuracy or completeness of electronic copies of this plan sheet.

To accompany plans dated _____

ROADSIDE SIGNS

- ■ RS1 Roadside Signs, Typical Installation Details No. 1
- ■ RS2 Roadside Signs, Wood Post, Typical Installation Details No. 2
- □ RS3 Roadside Signs, Laminated Wood Box Post, Typical Installation Details No. 3
- ■ RS4 Roadside Signs, Typical Installation Details No. 4

OVERHEAD SIGNS

OVERHEAD SIGNS-TRUSS

- □ S1 Overhead Signs- Truss, Instructions and Examples
- □ S2 Overhead Signs- Truss, Single Post Type, Post Types II thru VII
- □ S3 Overhead Signs- Truss, Two Post Type, Post Types I-S thru VII-S
- □ S4 Overhead Signs- Truss, Single Post Type, Structural Frame Members
- □ S5 Overhead Signs- Truss, Two Post Type, Structural Frame Members
- □ S6 Overhead Signs- Truss, Structural Frame Details
- □ S7 Overhead Signs- Truss, Frame Juncture Details
- □ S8A Overhead Signs- Steel Frame Removable Sign Panel Frames
- □ S8B Overhead Signs- Removable Sign Panel Frames, Overhead Formed Panel Mounting Details
- □ S8C Overhead Signs- Truss, Sign Panel Mounting Details, Laminated Panel- Type A
- □ S8D Overhead Signs- Truss, Removable Sign Panel Frames 2.794 m and 3.048 m Sign Panels
- □ S9 Overhead Signs- Walkway Details No. 1
- □ S10 Overhead Signs- Walkway Details No. 2
- □ S11 Overhead Signs- Walkway Safety Railing Details
- □ S13 Overhead Signs- Truss Pile Foundation

OVERHEAD SIGNS-LIGHTWEIGHT

- □ S14A Overhead Signs- Lightweight Balanced-Single Steel Post Connection and Mounting Details
- □ S14B Overhead Signs- Lightweight Balanced-Single Steel Post Details
- □ S15 Overhead Signs- Lightweight, Type A, Connection Details
- □ S16 Overhead Signs- Lightweight, Type B, Connection Details
- □ S17 Overhead Signs- Lightweight, Type C, Connection Details
- □ S18A Overhead Signs- Lightweight, Sign Panel Mounting Details, Laminated Panel- Type A
- □ S18B Overhead Signs- Lightweight, Light Fixture Mounting Details
- □ S20A Overhead Signs- Lightweight Post Details
- □ S20B Overhead Signs- Lightweight Foundation

OVERHEAD SIGNS-BOX BEAM CLOSED TRUSS ALTERNATIVE

- □ S39 Overhead Signs- Box Beam, Closed Truss Foundation
- □ S40A Overhead Signs- Box Beam, Closed Truss, Two Post Type Frame Members
- □ S40B Overhead Signs- Box Beam, Closed Truss, Single and Two Post Type General Frame Details
- □ S40C Overhead Signs- Box Beam, Closed Truss, Ribbed Sheet Metal Details
- □ S40D Overhead Signs- Box Beam, Closed Truss, Two Post Type Frame Details
- □ S40E Overhead Signs- Box Beam, Closed Truss, Two Post Type Frame Juncture Details
- □ S40F Overhead Signs- Box Beam, Closed Truss, Two Post Type Post Details
- □ S40G Overhead Signs- Box Beam, Closed Truss, Single Post Type Frame Members
- □ S40H Overhead Signs- Box Beam, Closed Truss, Single Post Cantilever Frame Details
- □ S40I Overhead Signs- Box Beam, Closed Truss, Single Post Cantilever Frame Juncture Details
- □ S40J Overhead Signs- Box Beam, Closed Truss, Single Post Cantilever Post Details
- □ S40K Overhead Signs- Box Beam, Closed Truss, Single Post Butterfly Frame Details
- □ S40L Overhead Signs- Box Beam, Closed Truss, Single Post Butterfly Frame Juncture Details
- □ S40M Overhead Signs- Box Beam, Closed Truss, Single Post Butterfly Post Details

OVERHEAD SIGNS-TUBULAR

- □ S40N Overhead Signs- Tubular, Instructions and Examples
- □ S40P Overhead Signs- Tubular, Single Post Type Layout and Pipe Section
- □ S40Q Overhead Signs- Tubular, Two Post Type Layout and Pipe Section
- □ S40R Overhead Signs- Tubular, Structural Frame Details No. 1
- □ S40S Overhead Signs- Tubular, Structural Frame Details No. 2
- □ S40T Overhead Signs- Tubular Foundation Details

SIGNALS, LIGHTING AND ELECTRICAL SYSTEMS

- □ ES-1A Signal, Lighting and Electrical Systems- Symbols and Abbreviations
- □ ES-1B Signal, Lighting and Electrical Systems- Symbols and Abbreviations
- □ ES-2A Signal, Lighting and Electrical Systems- Service Equipment
- □ ES-2B Signal, Lighting and Electrical Systems- Service Equipment
- □ ES-2C Signal, Lighting and Electrical Systems- Service Equipment Notes
- □ ES-2D Signal, Lighting and Electrical Systems- Service Equipment and Typical Wiring Diagram, Type A
- □ ES-2E Signal, Lighting and Electrical Systems- Service Equipment and Typical Wiring Diagram, Type B
- □ ES-2F Signal, Lighting and Electrical Systems- Service Equipment and Typical Wiring Diagram, Type C
- □ ES-3A Signal, Lighting and Electrical Systems- Signal Heads and Mountings
- □ ES-3B Signal, Lighting and Electrical Systems- Signal Heads and Mountings
- □ ES-3C Signal, Lighting and Electrical Systems- Signal Heads and Mountings
- □ ES-3D Signal, Lighting and Electrical Systems- Signal Heads and Mountings
- □ ES-3E Signal, Lighting and Electrical Systems- Signal Heads and Mountings
- □ ES-4A Signal, Lighting and Electrical Systems- Controller Cabinet Details
- □ ES-4B Signal, Lighting and Electrical Systems- Controller Cabinet Details
- □ ES-4C Signal, Lighting and Electrical Systems- Controller Cabinet Details
- □ ES-4D Irrigation Controller Enclosure Cabinet
- □ ES-4E Signal, Lighting and Electrical Systems- Telephone Demarcation Cabinet Details
- □ ES-4F Signal, Lighting and Electrical Systems- Telephone Demarcation Cabinet Details
- □ ES-5A Signal, Lighting and Electrical Systems- Detectors
- □ ES-5B Signal, Lighting and Electrical Systems- Detectors
- □ ES-5C Signal, Lighting and Electrical Systems- Detectors
- □ ES-5D Signal, Lighting and Electrical Systems- Detectors
- □ ES-5E Signal, Lighting and Electrical Systems- Detectors
- □ ES-5F Signal, Lighting and Electrical Systems- Pedestrian Barricades
- □ ES-6A Signal and Lighting Standards- Type 1 Standards and Equipment Numbering
- □ ES-6AA Signal Standards- Push Button Posts
- □ ES-6B Lighting Standards- Types 15, 21 and 22
- □ ES-6C Lighting Standards- 24.4 m to 48.8 m High Mast Light Pole, Foundation Details
- □ ES-6D Lighting Standards- Types 30 and 31
- □ ES-6DA Lighting Standards- Type 32
- □ ES-6E Lighting Standards- Types 30 and 31, Slip Base Details
- □ ES-6F Lighting Standards- 10 Degree Type
- □ ES-6H Lighting Standards- 10 Degree Type, Details
- □ ES-6J Signal and Lighting Standards- Case 1 Arm Loading, Wind Velocity = 113 km/h, Arm Lengths 4.5 m to 9.1 m
- □ ES-6K Signal and Lighting Standards- Case 2 Arm Loading, Wind Velocity = 113 km/h, Arm Lengths 6.1 m to 9.1 m
- □ ES-6L Signal and Lighting Standards- Case 3 Arm Loading, Wind Velocity = 113 km/h, Arm Lengths 4.5 m to 13.7 m
- □ ES-6M Signal and Lighting Standards- Case 4 Arm Loading, Wind Velocity = 113 km/h, Arm Lengths 7.6 m to 13.7 m
- □ ES-6MA Signal and Lighting Standards- Case 5 Arm Loading, Wind Velocity = 113 km/h, Arm Lengths 15.2 m to 16.8 m
- □ ES-6N Signal and Lighting Standards- Type 40-0-129
- □ ES-6O Signal and Lighting Standards- Case 1 Arm Loading, Wind Velocity = 129 km/h, Arm Lengths 7.6 m to 9.1 m
- □ ES-6P Signal and Lighting Standards- Case 2 Arm Loading, Wind Velocity = 129 km/h, Arm Lengths 6.1 m to 9.1 m
- □ ES-6Q Signal and Lighting Standards- Case 3 Arm Loading, Wind Velocity = 129 km/h, Arm Lengths 6.1 m to 13.7 m
- □ ES-6R Signal and Lighting Standards- Case 4 Arm Loading, Wind Velocity = 129 km/h, Arm Lengths 7.6 m 13.7 m
- □ ES-6RA Signal and Lighting Standards- Case 5 Arm Loading, Wind Velocity = 129 km/h, Arm Lengths 15.2 m to 16.8 m
- □ ES-6S Signal and Lighting Standards- Details No. 1
- □ ES-6T Signal and Lighting Standards- Details No. 2
- □ ES-6TA Signal and Lighting Standards- Pole and Mast Arm Alternatives
- □ ES-6U Lighting Standards- Types 10 and 15 Slip Base Insert
- □ ES-6V Signal and Sign Standards- Type 33 Left Turn
- □ ES-7A Signal, Lighting and Electrical Systems- Electrical Details, Structure Installations
- □ ES-7B Signal, Lighting and Electrical Systems- Electrical Details, Structure Installations
- □ ES-7C Signal, Lighting and Electrical Systems- Electrical Details, Structure Installations
- □ ES-7D Signal, Lighting and Electrical Systems- Electrical Details, Structure Installations
- □ ES-7E Signal, Lighting and Electrical Systems- Electrical Details, Structure Installations
- □ ES-7F Signal, Lighting and Electrical Systems- Flush Soffit Luminaire Modification Details, Structure Installation
- □ ES-8 Signal, Lighting and Electrical Systems- Pull Box Details
- □ ES-9A Signal, Lighting and Electrical Systems- Cantilever Flashing Beacon, Types 9, 9A and 9B
- □ ES-9B Signal, Lighting and Electrical Systems- Cantilever Flashing Beacon, Types 9, 9A and 9B
- □ ES-10 Signal, Lighting and Electrical Systems- Isolux Diagrams
- □ ES-11 Signal, Lighting and Electrical Systems- Foundation Installations
- □ ES-12 Signal, Lighting and Electrical Systems- Pedestrian Undercrossing Fluorescent Lighting Fixture
- □ ES-13 Signal, Lighting and Electrical Systems- Splicing Details
- □ ES-14 Signal, Lighting and Electrical Systems- Wiring Details and Fuse Ratings
- □ ES-15 Signal, Lighting and Electrical Systems- Pedestrian Overcrossing Fluorescent Lighting Fixture
- □ ES-27A Signal, Lighting and Electrical Systems- Extinguishable Message Sign, 250 mm Letters
- □ ES-27B Signal, Lighting and Electrical Systems- Extinguishable Message Sign, 250 mm Letters
- □ ES-28 Signal, Lighting and Electrical Systems- Extinguishable Message Sign and Flashing Beacons

SIGN ILLUMINATION

- □ ES-29 Sign Illumination- Mercury Sign Illumination Equipment
- □ ES-30 Sign Illumination- 915 mm Fluorescent Sign Illumination Equipment
- □ ES-32A Sign Illumination- Sign Illumination Equipment
- □ ES-32B Sign Illumination- Sign Illumination Control
- □ ES-33 Sign Illumination- Internally Illuminated Street Name Sign

SHEET 2 OF 2

STANDARD PLANS LIST

(July, 1995 Edition)

July 3, 1995

MAR 98 14:45:17 g:\grpi\pdata\34358\vgn\div\01sp02.div

DIST	COUNTY	ROUTE	KILOMETER POST TOTAL PROJECT	SHEET NO.	TOTAL SHEETS
11	SD	5	70.9		

Caltrans Metric

REGISTERED CIVIL ENGINEER

PLANS APPROVAL DATE

REGISTERED PROFESSIONAL ENGINEER MIKE CHESNEY No. 48913 Exp. 9-30-00 CIVIL STATE OF CALIFORNIA

ROBERT BEIN, WILLIAM FROST & ASSOCIATES
14725 ALTON PARKWAY
IRVINE, CA 92618

The State of California or its officers or agents shall not be responsible for the accuracy or completeness of electronic copies of this plan sheet.

BASIS OF BEARING AND COORDINATES

BEARINGS AND COORDINATES AS SHOWN HEREON ARE IN TERMS OF THE CALIFORNIA COORDINATE SYSTEM OF 1983 (1991.35), ZONE 6, BASED LOCALLY UPON THE FOLLOWING CONTINUOUSLY OPERATING REFERENCE STATIONS AS PUBLISHED BY THE NATIONAL GEODETIC SURVEY AND TRANSFORMED TO THE 1991.35 EPOCH USING THE HTDP MODEL VERSION 2.1.

STATION	NORTHING(Y)	EASTING(X)
MONP	580,447.164	1,983,875.722
S103	577,862.412	1,906,370.402
TRAK	662,023.898	1,855,858.790

BENCHMARK

ELEVATIONS AS SHOWN HEREON ARE IN TERMS OF THE NORTH AMERICAN VERTICAL DATUM OF 1988 BASED LOCALLY UPON THE FOLLOWING BENCHMARKS.

BENCHMARK	NAVD88 ELEV	SOURCE
TRAK	151.604	COUNTY OF ORANGE
DASH	462.113	NGS
F1415	75.015	NGS

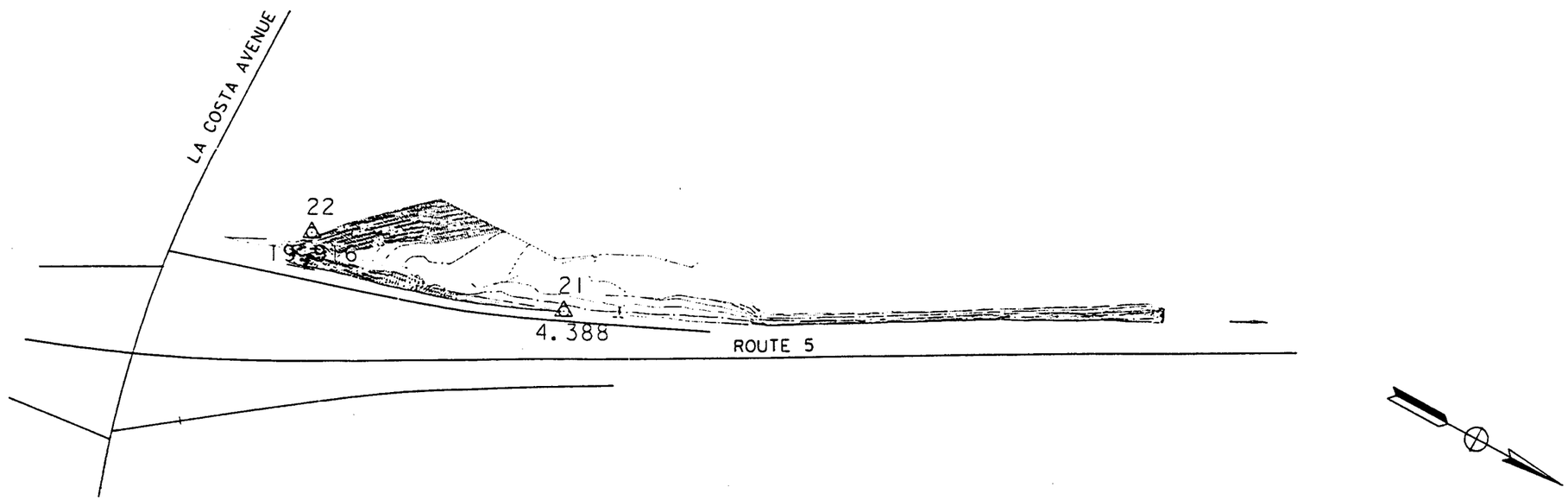

PROJECT CONTROL

STA NAME	NORTHING(Y) METERS	EASTING(X) METERS	EPOCH DATE	ELEVATION METERS	DESCRIPTION
21	602,528.296	1,901,962.817	1991.35	4.388	1" IP I-5/LA COSTA
22	602,328.233	1,901,999.802	1991.35	19.916	ALUMINUM CAP I-5/LA COSTA

CONSTRUCTION STAKING SURVEY CONTROL DATA (LOCATION 5) I-5/LA COSTA AVE

SCALE: 1:2000

CSS-4

REVISED BY	DATE REVISED

CALCULATED/DESIGNED BY	GY	DATE 3/98
CHECKED BY	MC	3/98

DESIGN OVERSIGHT

STATE OF CALIFORNIA - DEPARTMENT OF TRANSPORTATION

Caltrans

MAR 98 , 14:46:00 g:\grpl\pdata\34358\dgn\div\01css04.div

DIST	COUNTY	ROUTE	KILOMETER POST TOTAL PROJECT	SHEET NO.	TOTAL SHEETS
11	SD	5	70.9		

REGISTERED CIVIL ENGINEER

PLANS APPROVAL DATE

REGISTERED PROFESSIONAL ENGINEER MIKE CHESNEY No. 48913 Exp. 9-30-00 CIVIL STATE OF CALIFORNIA

ROBERT BEIN, WILLIAM FROST & ASSOCIATES
14725 ALTON PARKWAY
IRVINE, CA 92618

The State of California or its officers or agents shall not be responsible for the accuracy or completeness of electronic copies of this plan sheet.

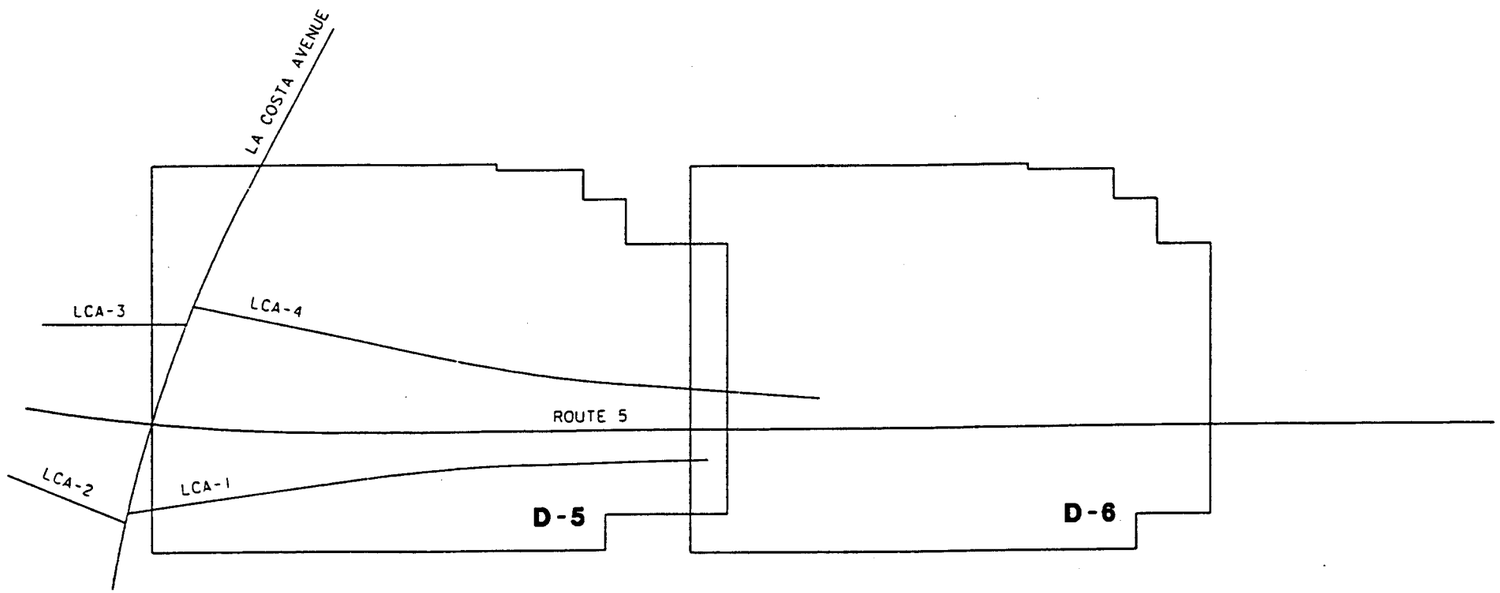

I-5/LA COSTA AVE (LOCATION 5) KEY MAP

NO SCALE

K-4

CALCULATED/DESIGNED BY	NW	DATE 3/98	REVISED BY
CHECKED BY	MC	3/98	DATE REVISED

DESIGN OVERSIGHT

STATE OF CALIFORNIA - DEPARTMENT OF TRANSPORTATION

Caltrans

AR 98 14:44:57 g:\grpi\paola\34358\dgn\div\01k04.div

ALL DIMENSIONS ARE IN METERS UNLESS OTHERWISE SHOWN

Caltrans Metric

DIST	COUNTY	ROUTE	KILOMETER POST TOTAL PROJECT	SHEET NO.	TOTAL SHEETS
11	SD	5	70.9		

REGISTERED CIVIL ENGINEER

PLANS APPROVAL DATE

REGISTERED PROFESSIONAL ENGINEER MIKE CHESNEY No. 48913 Exp. 9-30-00 CIVIL STATE OF CALIFORNIA

ROBERT BEIN, WILLIAM FROST & ASSOCIATES
14725 ALTON PARKWAY
IRVINE, CA 92618

The State of California or its officers or agents shall not be responsible for the accuracy or completeness of electronic copies of this plan sheet.

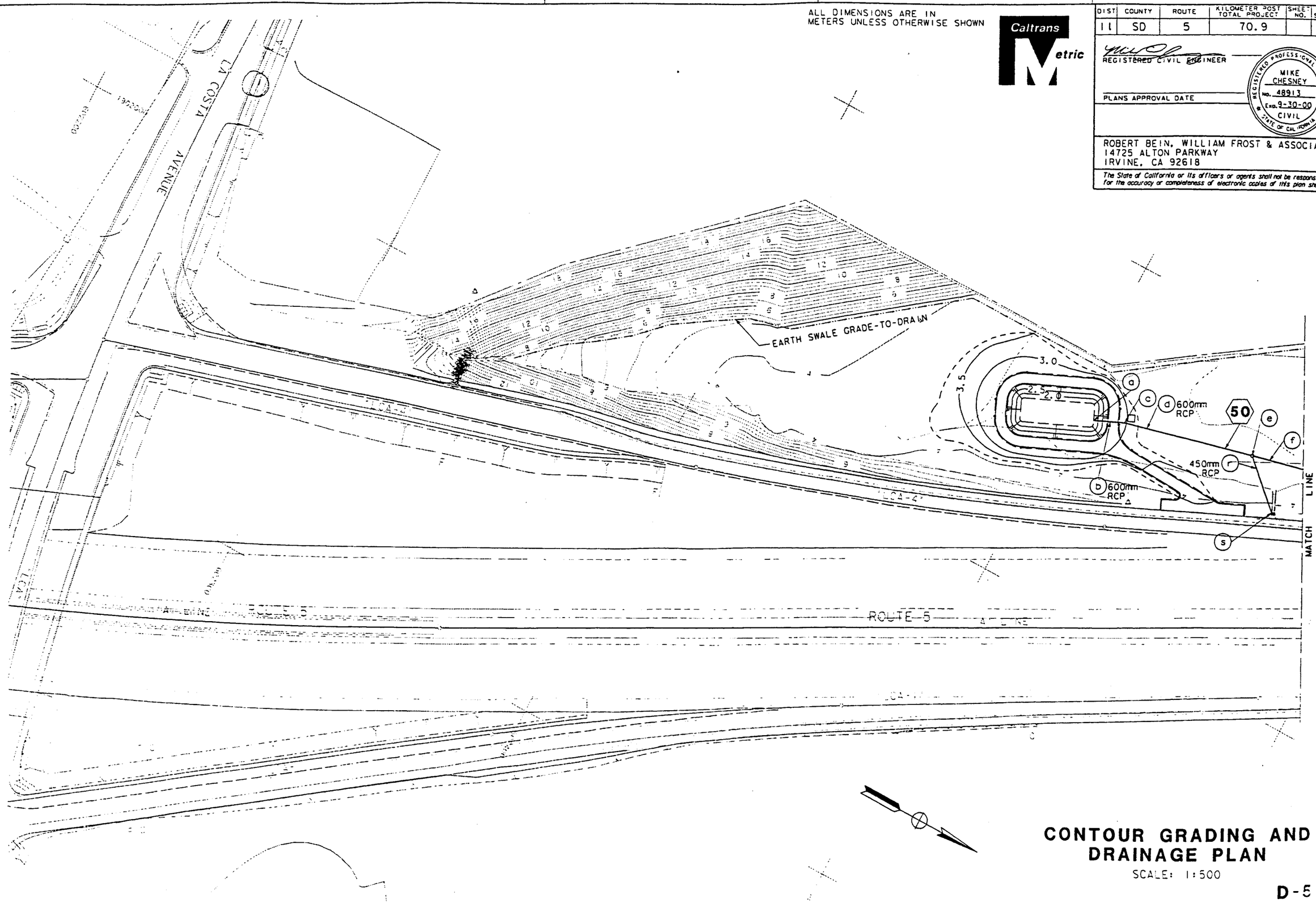

CONTOUR GRADING AND DRAINAGE PLAN

SCALE: 1:500

D-5

CALCULATED/ DESIGNED BY	NYW	DATE 5/98	REVISED BY
CHECKED BY	MC	5/98	DATE REVISED

DESIGN OVERSIGHT

STATE OF CALIFORNIA - - DEPARTMENT OF TRANSPORTATION

Caltrans

MAR 98 16:08:21 q:\grpl\pdata\34358\dgn\div\01a05.div

ALL DIMENSIONS ARE IN METERS UNLESS OTHERWISE SHOWN

Caltrans Metric

DIST	COUNTY	ROUTE	KILOMETER POST TOTAL PROJECT	SHEET NO.	TOTAL SHEETS
11	SD	5	70.9		

REGISTERED CIVIL ENGINEER

PLANS APPROVAL DATE

REGISTERED PROFESSIONAL ENGINEER MIKE CHESNEY No. 48913 Exp. 9-30-00 CIVIL STATE OF CALIFORNIA

ROBERT BEIN, WILLIAM FROST & ASSOCIATES
14725 ALTON PARKWAY
IRVINE, CA 92618

The State of California or its officers or agents shall not be responsible for the accuracy or completeness of electronic copies of this plan sheet.

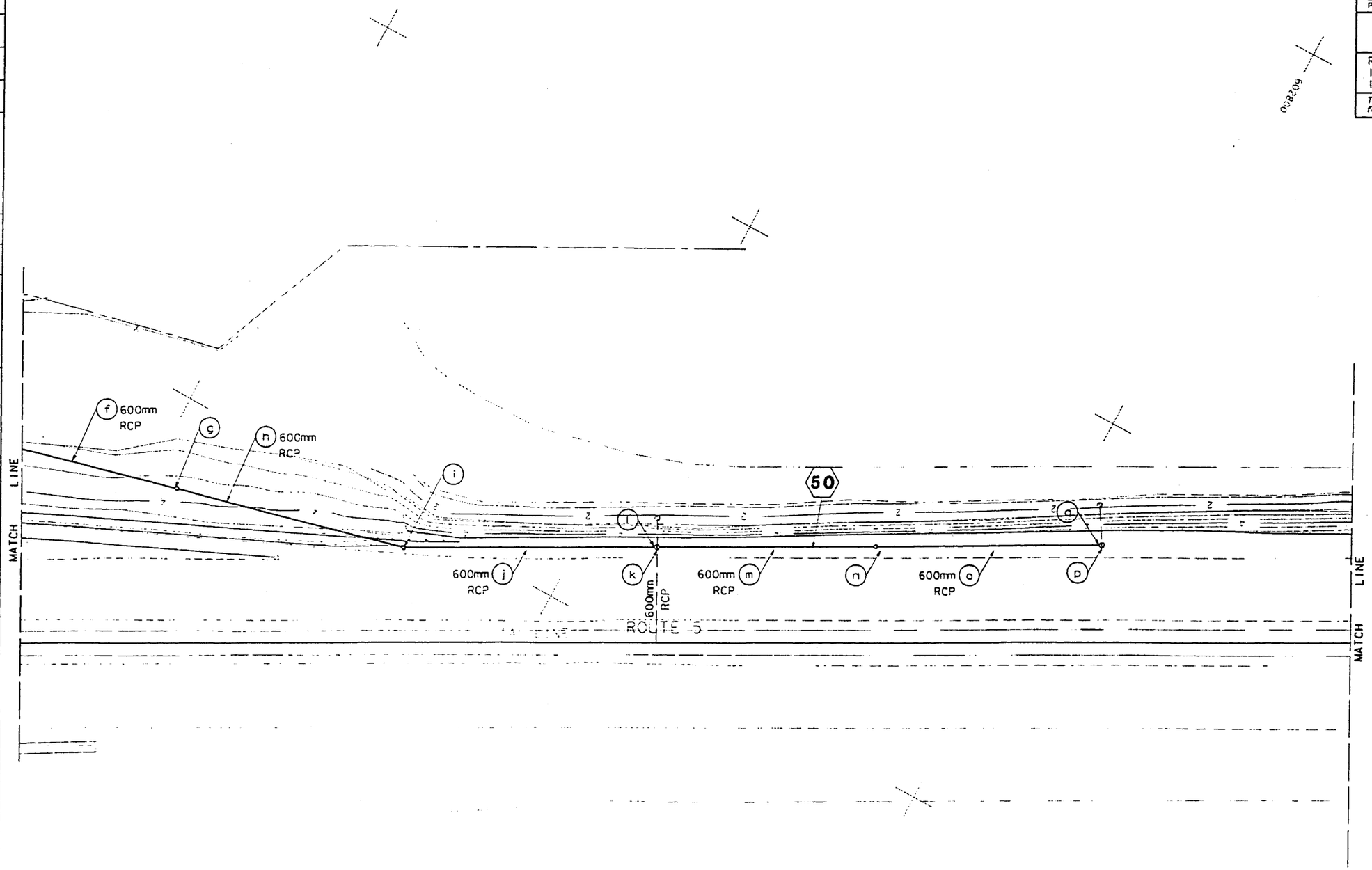

CONTOUR GRADING AND DRAINAGE PLAN

SCALE: 1:500

D-6

CALCULATED/ DESIGNED BY	NYW	DATE 3/98	REVISED BY
CHECKED BY	MC	3/98	DATE REVISED

DESIGN OVERSIGHT

STATE OF CALIFORNIA -- DEPARTMENT OF TRANSPORTATION

Caltrans

R 98 16:08:31 g:\grp1\pdata\34358\dgn\dtv\01d06.dtv

ALL DIMENSIONS ARE IN METERS UNLESS OTHERWISE SHOWN

Caltrans Metric

DIST	COUNTY	ROUTE	KILOMETER POST TOTAL PROJECT	SHEET NO.	TOTAL SHEETS
11	SD	5	70.9		

REGISTERED CIVIL ENGINEER

PLANS APPROVAL DATE

REGISTERED PROFESSIONAL ENGINEER MIKE CHESNEY No. 48913 Exp. 9-30-00 CIVIL STATE OF CALIFORNIA

ROBERT BEIN, WILLIAM FROST & ASSOCIATES
14725 ALTON PARKWAY
IRVINE, CA 92618

The State of California or its officers or agents shall not be responsible for the accuracy or completeness of electronic copies of this plan sheet.

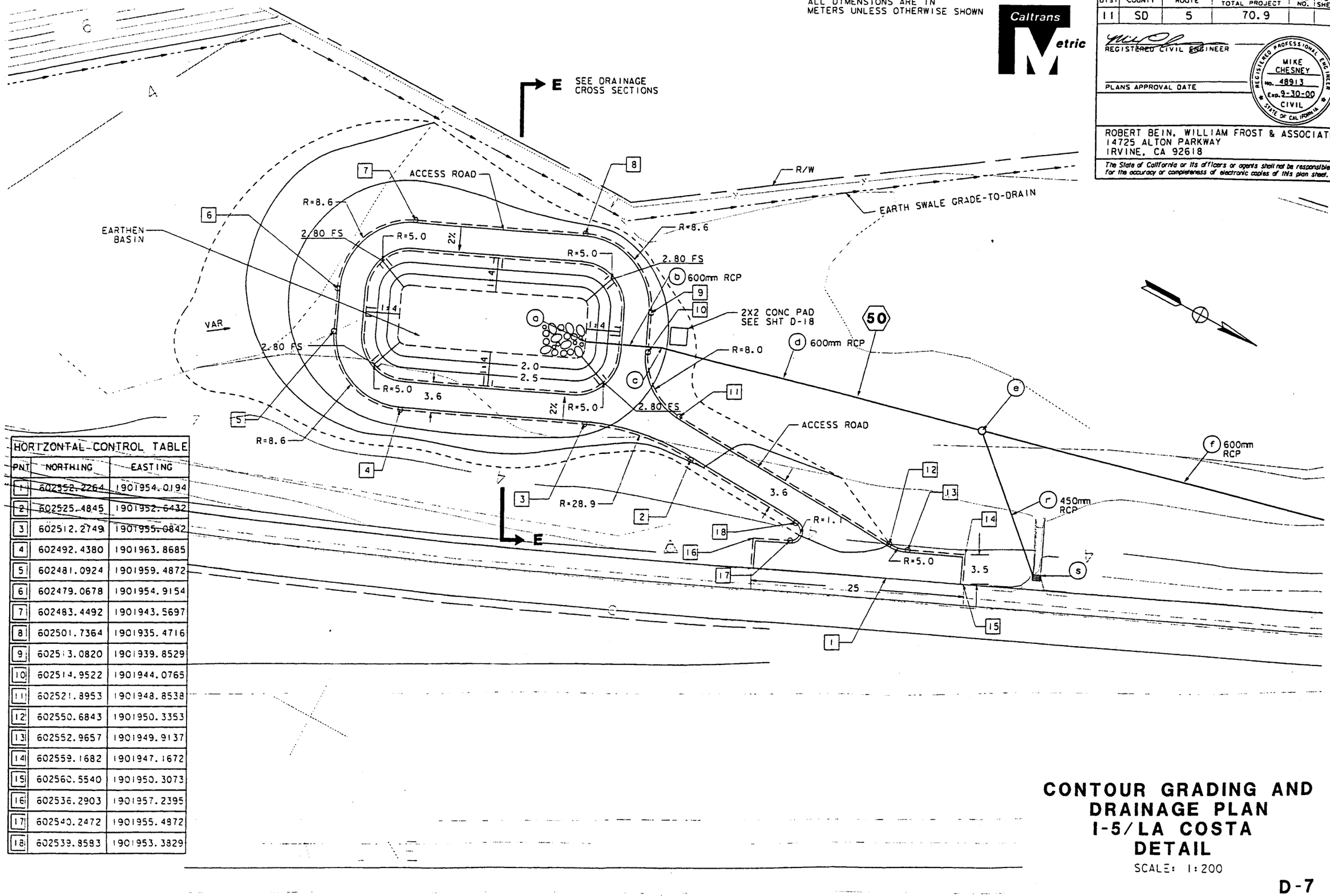

HORIZONTAL CONTROL TABLE		
PNT	NORTHING	EASTING
1	602552.2264	1901954.0194
2	602525.4845	1901952.6432
3	602512.2749	1901955.0842
4	602492.4380	1901963.8685
5	602481.0924	1901959.4872
6	602479.0678	1901954.9154
7	602483.4492	1901943.5697
8	602501.7364	1901935.4716
9	602513.0820	1901939.8529
10	602514.9522	1901944.0765
11	602521.8953	1901948.8538
12	602550.6843	1901950.3353
13	602552.9657	1901949.9137
14	602559.1682	1901947.1672
15	602560.5540	1901950.3073
16	602536.2903	1901957.2395
17	602540.2472	1901955.4872
18	602539.8583	1901953.3829

CONTOUR GRADING AND DRAINAGE PLAN I-5/LA COSTA DETAIL

SCALE: 1:200

D-7

CALCULATED/DESIGNED BY	NYW	DATE 3/98	REVISED BY
CHECKED BY	MC	3/98	DATE REVISED

DESIGN OVERSIGHT

STATE OF CALIFORNIA - DEPARTMENT OF TRANSPORTATION

Caltrans

MAR 98 11:10:23 g:\grpl\pdata\34358\dgn\div\01d07.div

ALL DIMENSIONS ARE IN METERS UNLESS OTHERWISE SHOWN

Caltrans Metric

DIST	COUNTY	ROUTE	KILOMETER POST TOTAL PROJECT	SHEET NO.	TOTAL SHEETS
11	SD	5	70.9		

REGISTERED CIVIL ENGINEER

PLANS APPROVAL DATE

REGISTERED PROFESSIONAL ENGINEER A.M. WALKER No. 57716 Exp. 12-31-01 CIVIL STATE OF CALIFORNIA

ROBERT BEIN, WILLIAM FROST & ASSOCIATES
14725 ALTON PARKWAY
IRVINE, CA 92618

The State of California or its officers or agents shall not be responsible for the accuracy or completeness of electronic copies of this plan sheet.

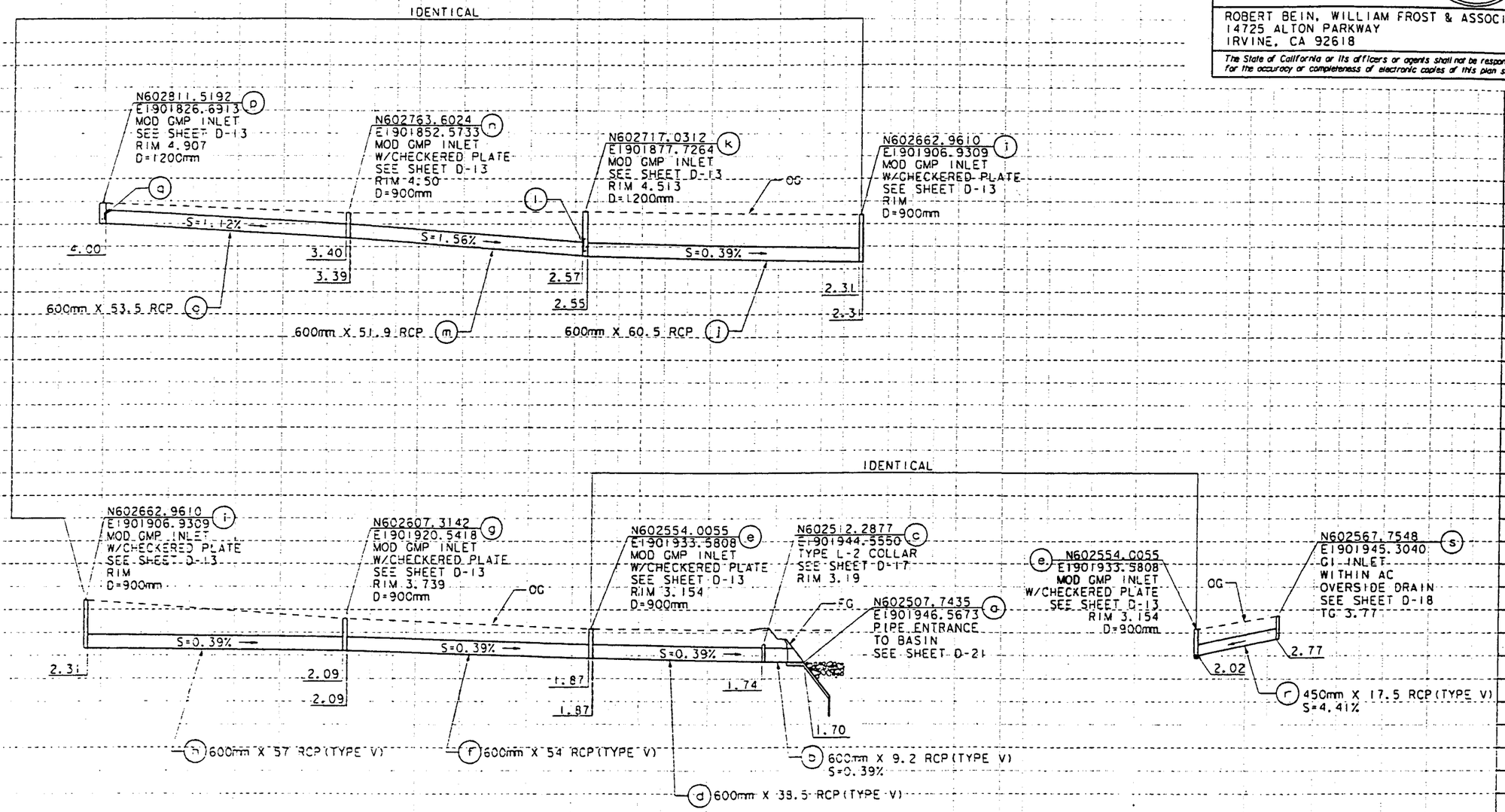

DRAINAGE SYSTEM NO 50

DRAINAGE PROFILES

SCALE: HORIZ 1:500
VERT 1:100

D-12

DATE	REVISED BY	DATE REVISED
3/98	AMW	3/98

CALCULATED/DESIGNED BY SMT
CHECKED BY

DESIGN OVERSIGHT

STATE OF CALIFORNIA - DEPARTMENT OF TRANSPORTATION

Caltrans

ALL DIMENSIONS ARE IN MILLIMETERS UNLESS OTHERWISE SHOWN

Caltrans Metric

DIST	COUNTY	ROUTE	KILOMETER POST TOTAL PROJECT	SHEET NO.	TOTAL SHEETS
11	SD	VAR	VAR		

REGISTERED CIVIL ENGINEER

PLANS APPROVAL DATE

REGISTERED PROFESSIONAL ENGINEER A.M. WALKER No. 57716 Exp. 12-31-01 CIVIL STATE OF CALIFORNIA

ROBERT BEIN, WILLIAM FROST & ASSOCIATES
14725 ALTON PARKWAY
IRVINE, CA 92618

The State of California or its officers or agents shall not be responsible for the accuracy or completeness of electronic copies of this plan sheet.

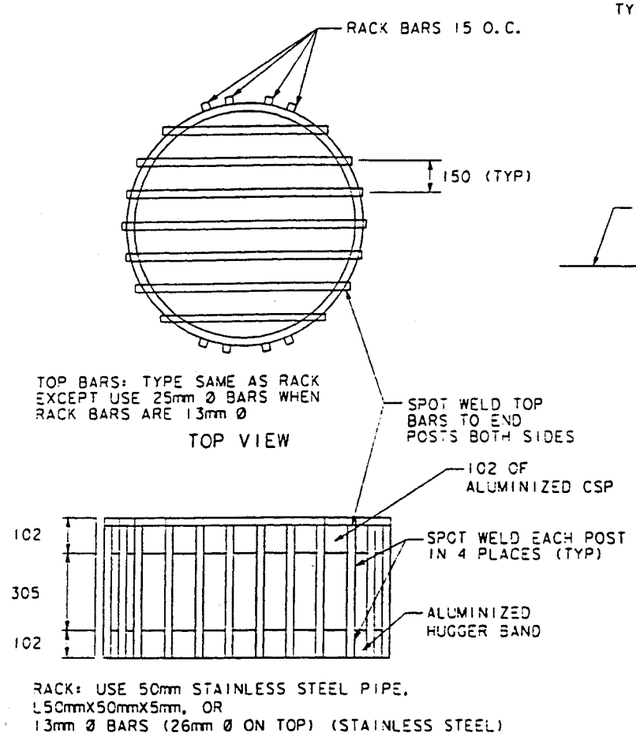

DEBRIS RACK CAGE

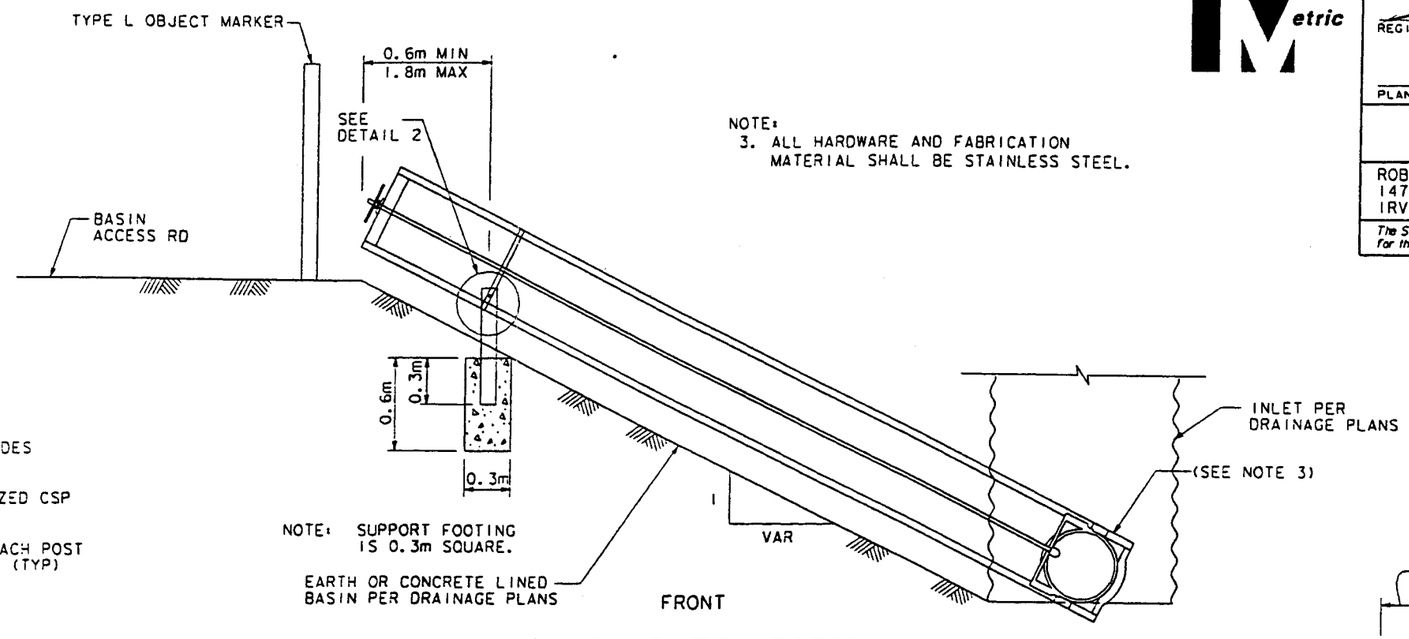

NOTE:
3. ALL HARDWARE AND FABRICATION MATERIAL SHALL BE STAINLESS STEEL.

CANAL GATE SECTION

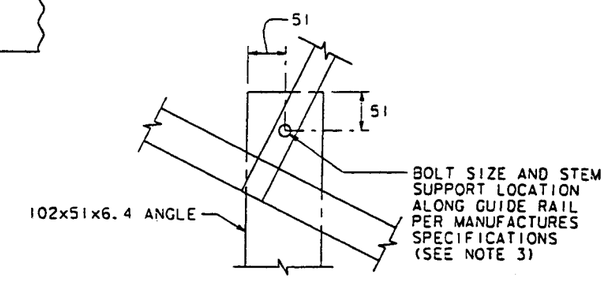

DETAIL 2

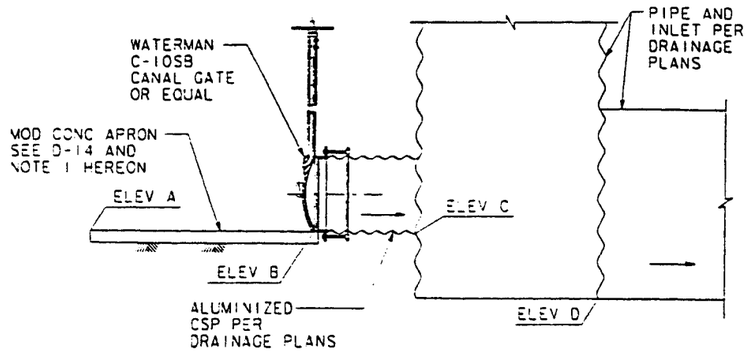

ELEVATION

NOTE:
1. FORM MODIFIED CONCRETE APRON ADJACENT TO THE CANAL GATE CONNECTION, AS NECESSARY, TO ACCOMODATE CANAL GATE HARDWARE.

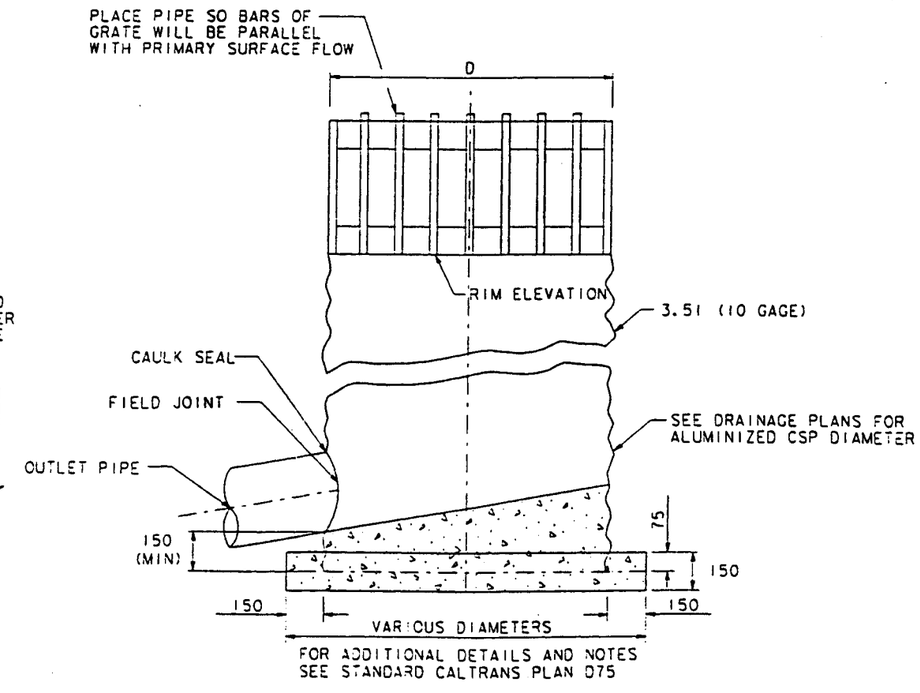

SECTION A-A

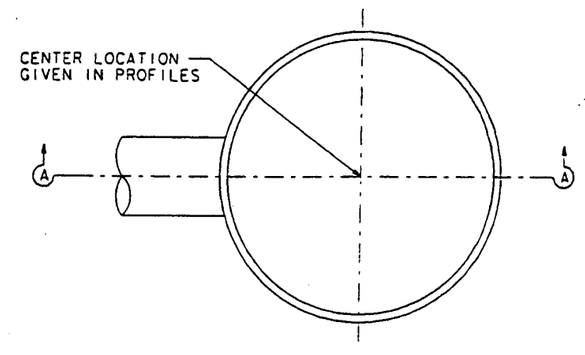

DRAINAGE DETAILS

NO SCALE

MODIFIED GMP INLET WITH DEBRIS RACK CAGE

D-13

CALCULATED/DESIGNED BY	AMW	DATE 3/98	REVISED BY
CHECKED BY	SMT	3/98	DATE REVISED

DESIGN OVERSIGHT

STATE OF CALIFORNIA - DEPARTMENT OF TRANSPORTATION

Caltrans

MAR 98 16:59:10 g:\grp1\pdata\34358\dgn\div01d13.div

SYS NO	UNIT	D (mm)	ELEV A	ELEV B
2*	e	42.9	2.000	N/A
20	a	38.1	3.473	N/A
30	a	44.5	6.386	6.395
41	a	44.5	195.94	N/A

* WRAP STAINLESS STEEL WIRE FABRIC AROUND BOTTOM OF FRAME

ALL DIMENSIONS ARE IN MILLIMETERS UNLESS OTHERWISE SHOWN

Caltrans Metric

DIST	COUNTY	ROUTE	KILOMETER POST TOTAL PROJECT	SHEET NO.	TOTAL SHEETS
11	SD	VAR	VAR		

REGISTERED CIVIL ENGINEER

PLANS APPROVAL DATE

REGISTERED PROFESSIONAL ENGINEER A.M. WALKER No. 57716 Exp. 12-31-01 CIVIL STATE OF CALIFORNIA

ROBERT BEIN, WILLIAM FROST & ASSOCIATES
14725 ALTON PARKWAY
IRVINE, CA 92618

The State of California or its officers or agents shall not be responsible for the accuracy or completeness of electronic copies of this plan sheet.

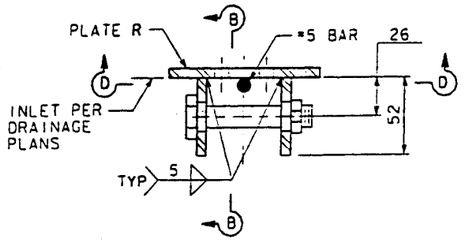

TRASH RACK FASTENER

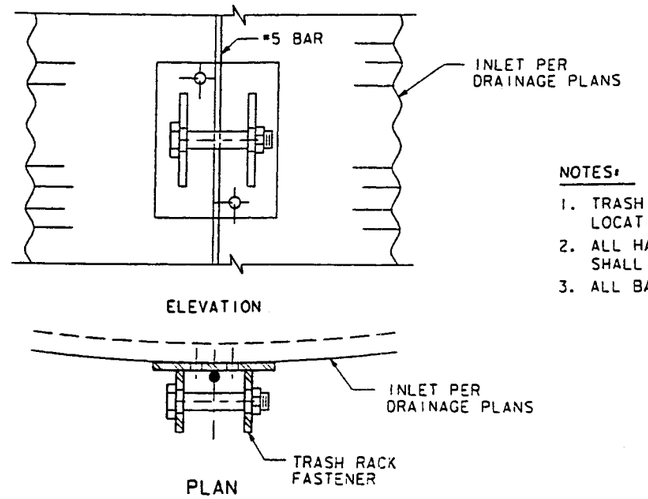

DETAIL 1

NOTES:

1. TRASH RACK FASTENERS SHALL BE BOLTED TO INLET AT LOCATIONS SHOWN.
2. ALL HARDWARE AND FABRICATION MATERIALS SHALL BE STAINLESS STEEL.
3. ALL BARS SHALL BE STAINLESS STEEL.

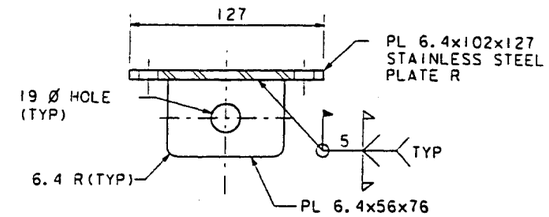

SECTION B-B

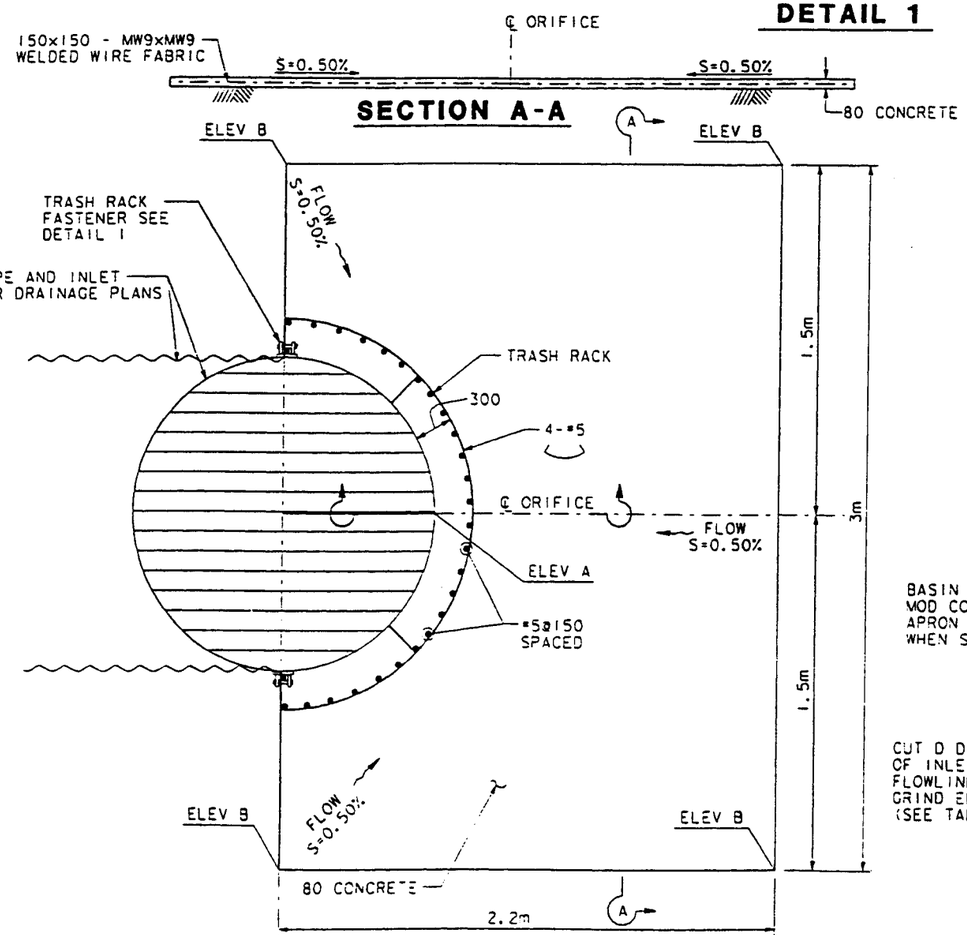

SECTION A-A

MODIFIED CONCRETE APRON

SHOWN WITH TRASH RACK PLAN

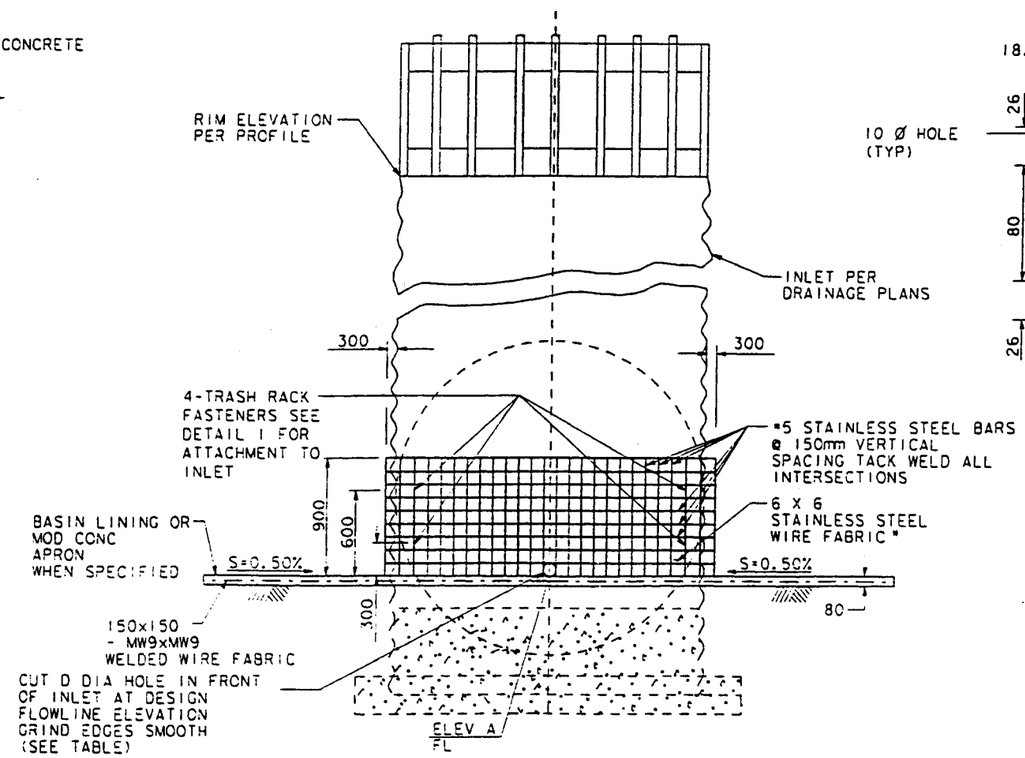

ORIFICE OPENING AND DEBRIS SCREEN FRAME

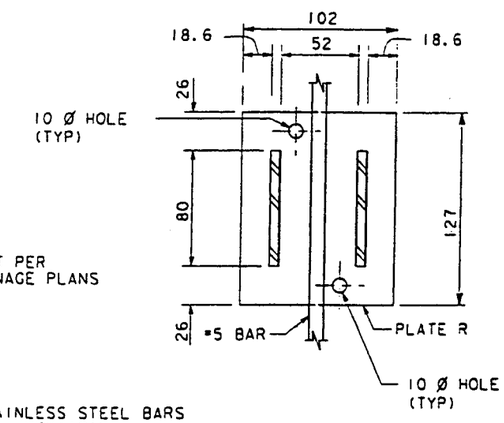

SECTION D-D

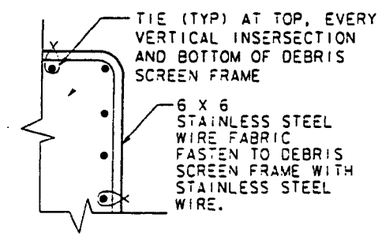

SECTION A-A

DRAINAGE DETAILS

NO SCALE

D-14

DATE | REVISED BY | DATE REVISED
3/98 | AMW | 3/98 SMT

CALCULATED/DESIGNED BY | CHECKED BY

DESIGN OVERSIGHT

STATE OF CALIFORNIA - DEPARTMENT OF TRANSPORTATION

Caltrans

ALL DIMENSIONS ARE IN MILLIMETERS UNLESS OTHERWISE SHOWN

Caltrans Metric

DIST	COUNTY	ROUTE	KILOMETER POST TOTAL PROJECT	SHEET NO.	TOTAL SHEETS
11	SD	VAR	VAR		

REGISTERED CIVIL ENGINEER

PLANS APPROVAL DATE

REGISTERED PROFESSIONAL ENGINEER A.M. WALKER No. 57716 Exp. 12-31-01 CIVIL STATE OF CALIFORNIA

ROBERT BEIN, WILLIAM FROST & ASSOCIATES
14725 ALTON PARKWAY
IRVINE, CA 92618

The State of California or its officers or agents shall not be responsible for the accuracy or completeness of electronic copies of this plan sheet.

D_2	H_b	L
675mm OR LESS	0.9 m	1.2 m
750mm TO 975mm INCLUSIVE	1.2 m	1.2 m

EXCEPTIONS TO BE NOTED ON PLANS.

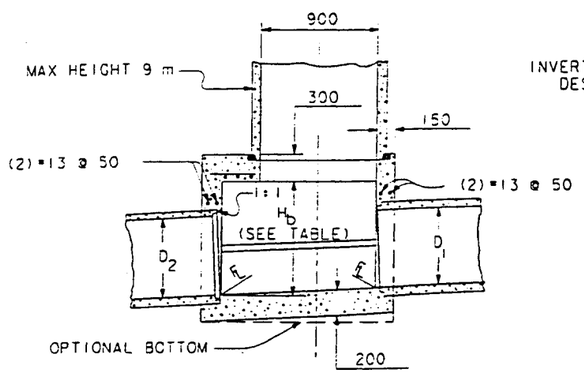

SECTION G-G

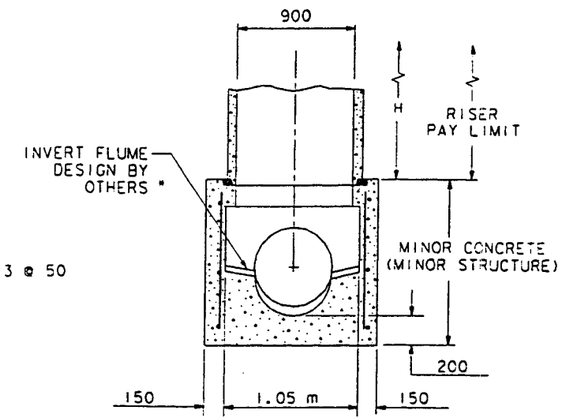

SECTION F-F

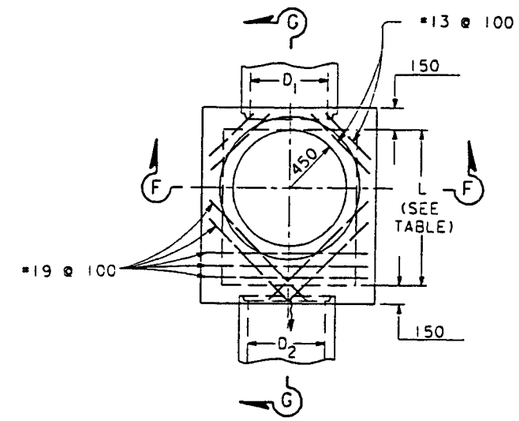

PLAN

FOR USE WHEN D_2 (OUTLET PIPE DIA) IS 975mm OR LESS

STORM DRAIN & MANHOLE STRUCTURE (TYPE X BASE)

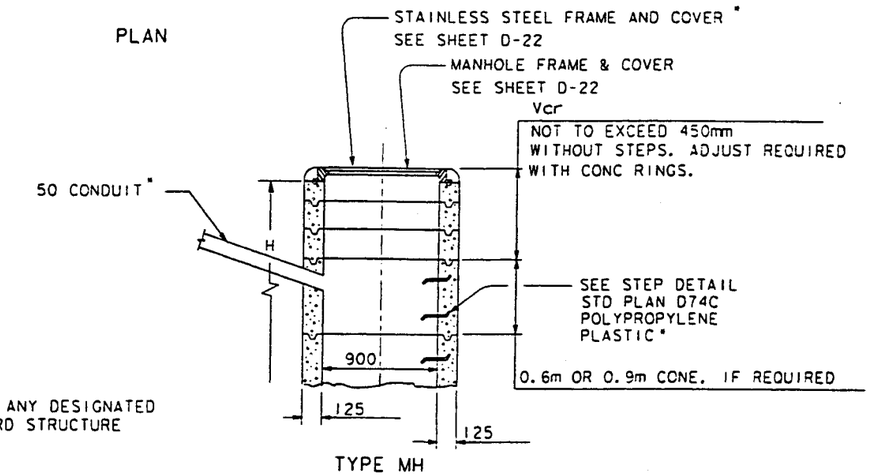

TYPE MH

FOR USE WITH EITHER TYPE X OR TYPE Y BASE STRUCTURES

UPPER STRUCTURE

NOTES:

1. RISERS MAY BE MADE UP OF 150mm, 200mm, 450mm, 600mm, OR 1200mm SECTIONS.
2. EACH RISER SHALL HAVE A LADDER, AS DETAILED ON STANDARD PLAN D74C. THE LADDER SHALL BE SUSPENDED INTO BASE STRUCTURE.
3. ALL PRECAST COMPONENTS FOR UPPER PORTION TYPE MH SHALL BE REINFORCED WITH 6 DIAMETER STEEL WOUND SPIRALLY @ 100mm CENTERS.
4. H AND Hb SHALL BE AS SPECIFIED ON PLANS.
5. REINFORCING STEEL SHALL BE #13 BARS @ 450mm CENTERS PLACED 40 CLEAR TO INSIDE OF BOX UNLESS OTHERWISE SHOWN.
6. PIPE(S) MAY BE PLACED IN ANY WALL.
7. DESIGN UNIT STRESSES: F_s = 40 MPa, F_m = 0, F_c = 10 MPa.
8. CENTER OF RISER SHALL BE LOCATED OVER THE CENTERLINE OF MAIN STORM DRAIN.
9. THICKNESS OF DECK SHALL VARY WHEN NECESSARY TO PROVIDE LEVEL MANHOLE SEAT.

* INSTALLED AT WATER QUALITY MONITORING MANHOLE LOCATIONS ONLY.

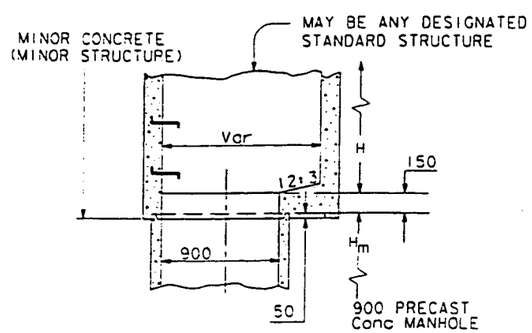

TYPICAL UPPER STRUCTURE AND MANHOLE JUNCTION

UPPER STRUCTURE

WATER QUALITY MONITORING MANHOLE LOCATIONS

SYSTEM	UNIT	DESCRIPTION
1	c	INFLOW
2	c	OUTFLOW
20	d	OUTFLOW
21	f	INFLOW
30	c	OUTFLOW
31	c	INFLOW
40	c	INFLOW
41	c	OUTFLOW

DRAINAGE DETAILS

NO SCALE

D-15

DESIGN OVERSIGHT	CALCULATED/DESIGNED BY	CHECKED BY	REVISED BY	DATE REVISED
	AMW	SMT		
	DATE 3/98	3/98		

STATE OF CALIFORNIA - DEPARTMENT OF TRANSPORTATION

Caltrans

MAR 98 16:25:27 g:\grpl\pa01a\34358\agn\drv\d1d15.div

ALL DIMENSIONS ARE IN MILLIMETERS UNLESS OTHERWISE SHOWN

Caltrans Metric

DIST.	COUNTY	ROUTE	KILOMETER POST TOTAL PROJECT	SHEET, TOTAL NO. SHEETS
11	SD	VAR	VAR	

REGISTERED CIVIL ENGINEER

PLANS APPROVAL DATE

REGISTERED PROFESSIONAL ENGINEER A. M. WALKER No. 57716 Exp. 12-31-01 CIVIL STATE OF CALIFORNIA

ROBERT BEIN, WILLIAM FROST & ASSOCIATES
14725 ALTON PARKWAY
IRVINE, CA 92618

The State of California or its officers or agents shall not be responsible for the accuracy or completeness of electronic copies of this plan sheet.

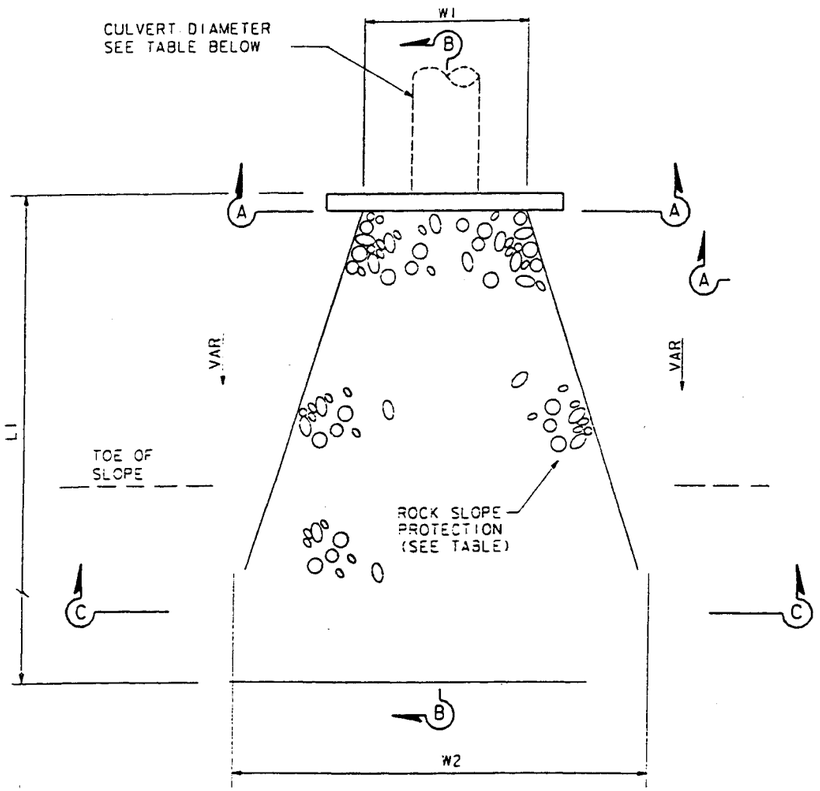

PLAN

NOTE:
FILTER FABRIC TO BE PLACED UNDER ALL ROCK SLOPE PROTECTION.

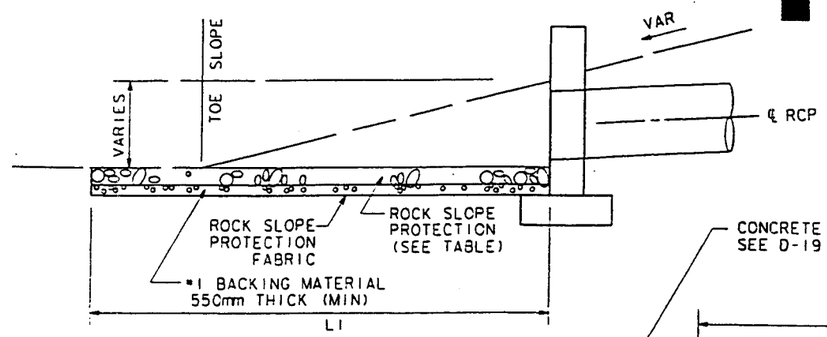

SECTION B-B

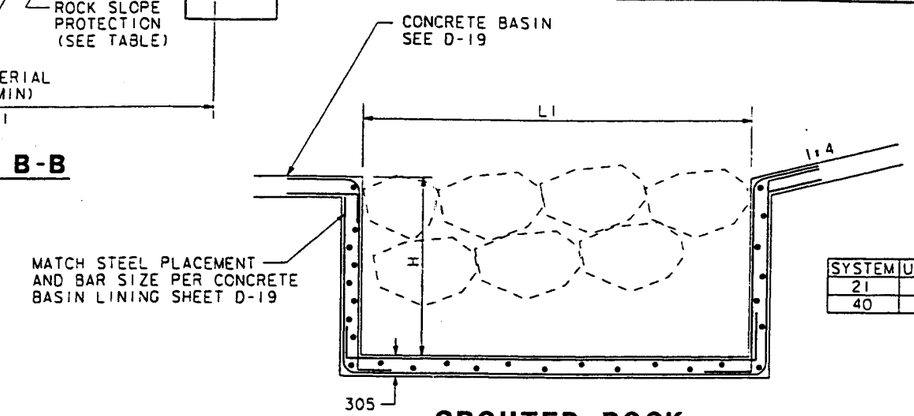

SYSTEM	UNIT	H (m)
21	a	0.5
40	a	0.5

GROUTED ROCK SLOPE PROTECTION

ROCK SLOPE PROTECTION (METHOD B)						
SYSTEM	CULVERT DIAMETER	WIDTH "W1"	WIDTH "W2"	LENGTH "L1"	TYPE	(THICKNESS) "D"
1a	600	SEE D-21	SEE D-21	20 m	1/4 TONNE	SEE D-21
21a	450	3 m	3 m	3 m	FACING	GROUTED
21k	N/A	3 m	7 m	16 m	1/4 TONNE	1.5 m
31a	600	4 m	4 m	4 m	1/4 TONNE	1.5 m
31l	N/A	SEE D-18	SEE D-18	30 m	FACING	SEE D-18
40a	750	3 m	10 m	8 m	FACING	GROUTED
50a	600	SEE D-21	SEE D-21	20 m	1/4 TONNE	SEE D-21

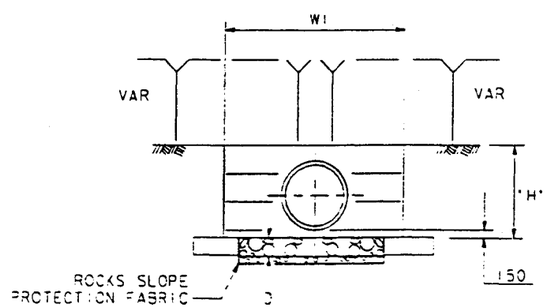

SECTION A-A

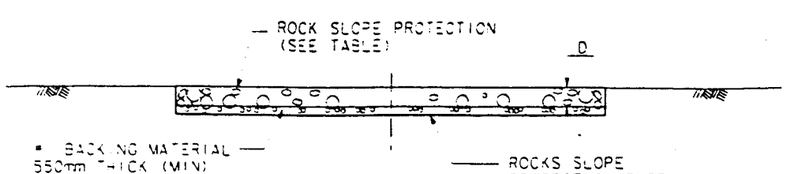

SECTION C-C

ROCK SLOPE PROTECTION

DRAINAGE DETAILS

NO SCALE

D-16

DATE	REVISED BY	DATE REVISED
3/98	AMW	3/98 SMT

CALCULATED/DESIGNED BY
CHECKED BY

DESIGN OVERSIGHT

STATE OF CALIFORNIA - DEPARTMENT OF TRANSPORTATION

Caltrans

ALL DIMENSIONS ARE IN MILLIMETERS UNLESS OTHERWISE SHOWN

Caltrans Metric

DIST	COUNTY	ROUTE	KILOMETER POST TOTAL PROJECT	SHEET TOTAL NO. SHEETS
11	SD	VAR	VAR	

REGISTERED CIVIL ENGINEER

PLANS APPROVAL DATE

REGISTERED PROFESSIONAL ENGINEER A.M. WALKER No. 57716 Exp. 12-31-01 CIVIL STATE OF CALIFORNIA

ROBERT BEIN, WILLIAM FROST & ASSOCIATES
14725 ALTON PARKWAY
IRVINE, CA 92618

The State of California or its officers or agents shall not be responsible for the accuracy or completeness of electronic copies of this plan sheet.

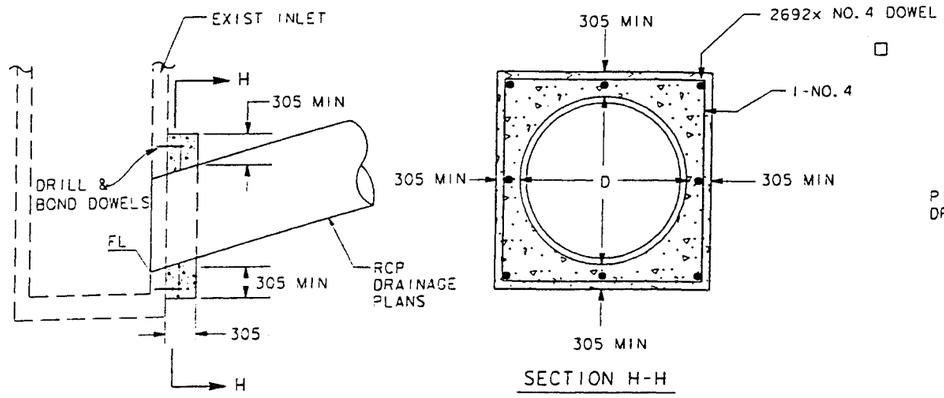

SECTION H-H

TYPE L-3 COLLAR

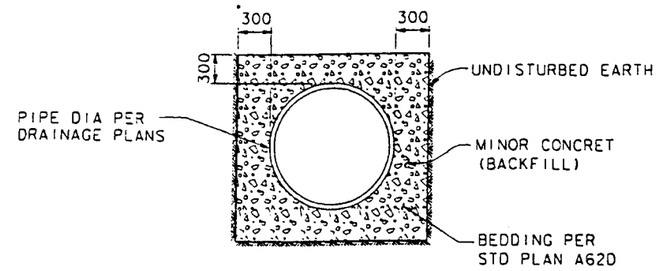

MINOR CONCRETE (BACKFILL) DETAIL

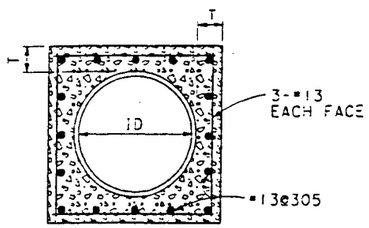

SECTION A-A

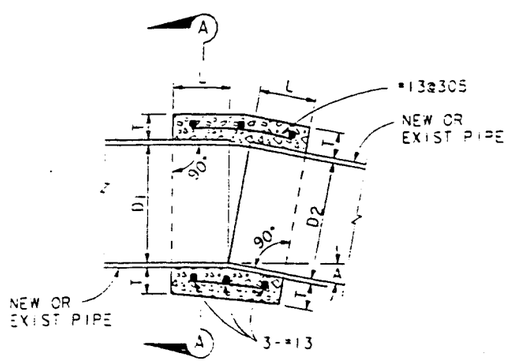

D	L	T
300	300	125
450	300	135
600	300	150
750	300	200
900	450	200
1200	450	250
1300	450	250
1500	525	280
1650	525	280
1800	600	300

L-2 COLLAR

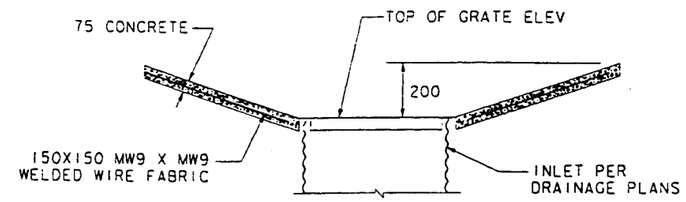

SECTION B-B

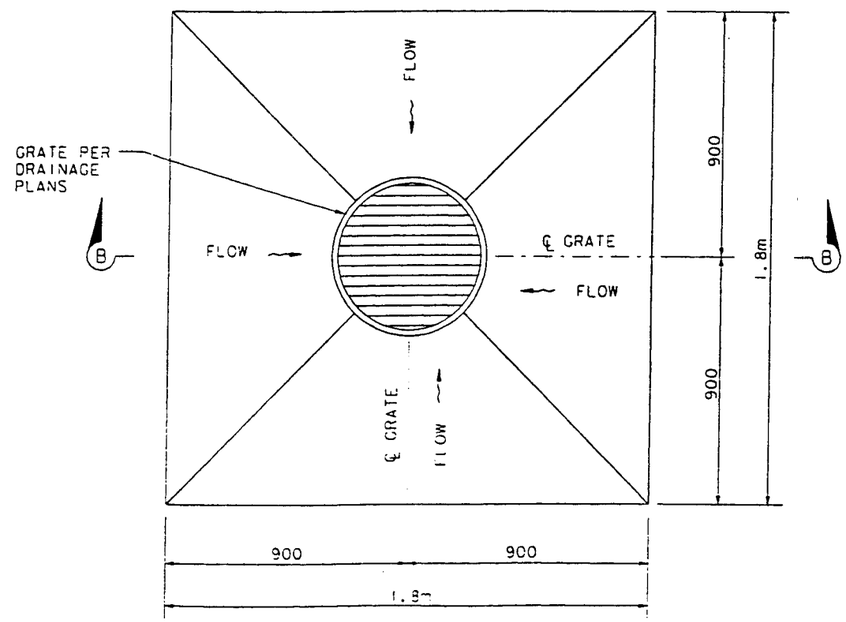

PLAN

DEPRESSED APRON

NOTES (CONCRETE COLLAR)

1. WHERE PIPES OF DIFFERENT DIAMETER ARE JOIN WITH A CONCRETE COLLAR, D SHALL BE THE DIAMETER OF LARGER PIPE.
2. FOR PIPE SIZE NOT LISTED, USE NEXT SIZE LARGER.
3. OMIT REINFORCING ON PIPES 600mm AND LESS IN DIAMETER AND ON ALL PIPES WHERE ANGLE A IS LESS THAN 10°
4. REINFORCEMENT SHALL BE PLACED 40mm CLEAR FROM OUTSIDE DIAMETER OF PIPE.

DRAINAGE DETAILS

NO SCALE

D-17

DATE	REVISED BY	DATE	REVISED
3/98	AMW	3/98	SMI

CALCULATED/DESIGNED BY
CHECKED BY

DESIGN OVERSIGHT

STATE OF CALIFORNIA - DEPARTMENT OF TRANSPORTATION

Caltrans

ALL DIMENSIONS ARE IN MILLIMETERS UNLESS OTHERWISE SHOWN

Caltrans Metric

DIST	COUNTY	ROUTE	KILOMETER POST TOTAL PROJECT	SHEET NO.	TOTAL SHEETS
11	SD	VAR	VAR		

REGISTERED CIVIL ENGINEER

PLANS APPROVAL DATE

REGISTERED PROFESSIONAL ENGINEER A.M. WALKER No. 57716 Exp. 12-31-01 CIVIL STATE OF CALIFORNIA

ROBERT BEIN, WILLIAM FROST & ASSOCIATES
14725 ALTON PARKWAY
IRVINE, CA 92618

The State of California or its officers or agents shall not be responsible for the accuracy or completeness of electronic copies of this plan sheet.

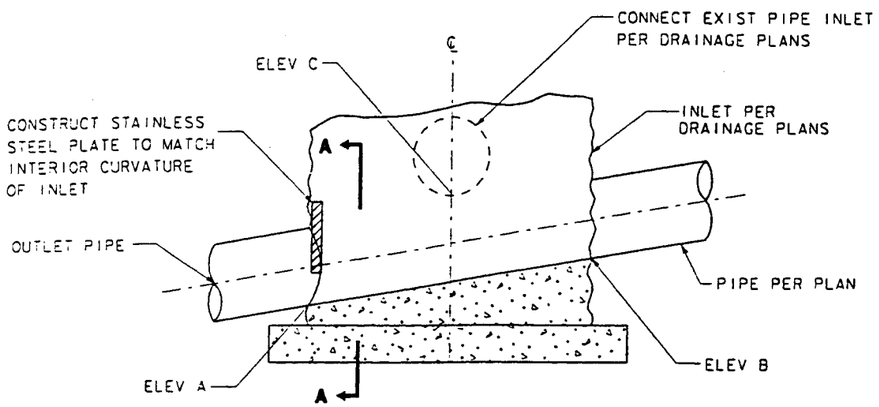

SYSTEM	UNIT	ELEV A (m)	ELEV B (m)	ELEV C (m)
50	i	2.550	2.570	2.570
50	a	4.000	N/A	4.510

FLOW RESTRICTER PLATE

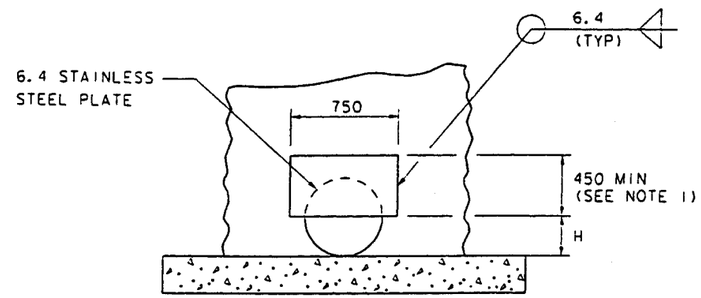

SECTION A-A

NOTE:

1. TOP EDGE OF PLATE SHALL BE WELDED TO THE CREST OF THE CORRUGATION

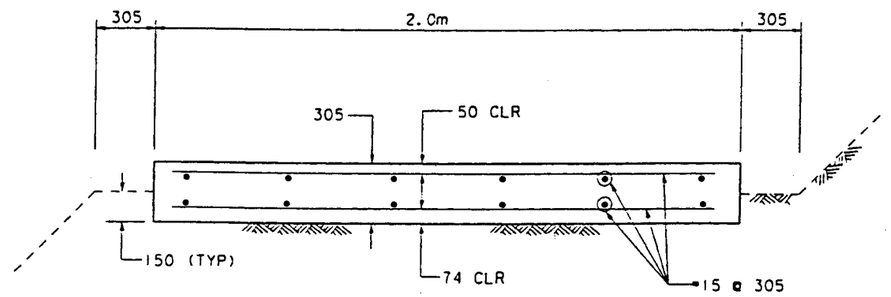

2 X 2 CONCRETE PAD

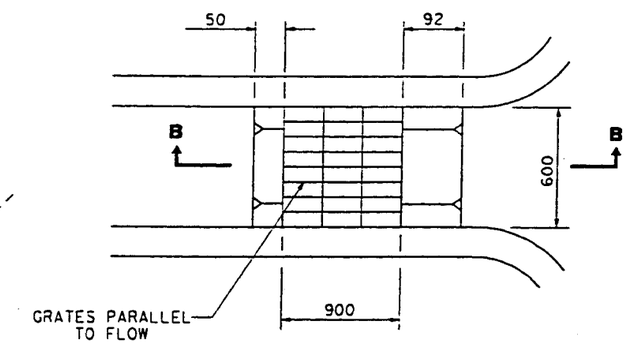

PLAN

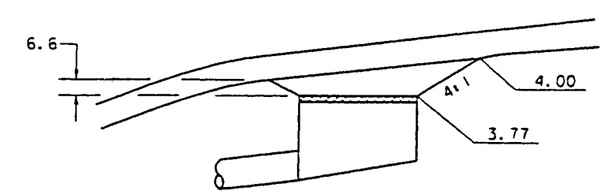

SECTION B-B

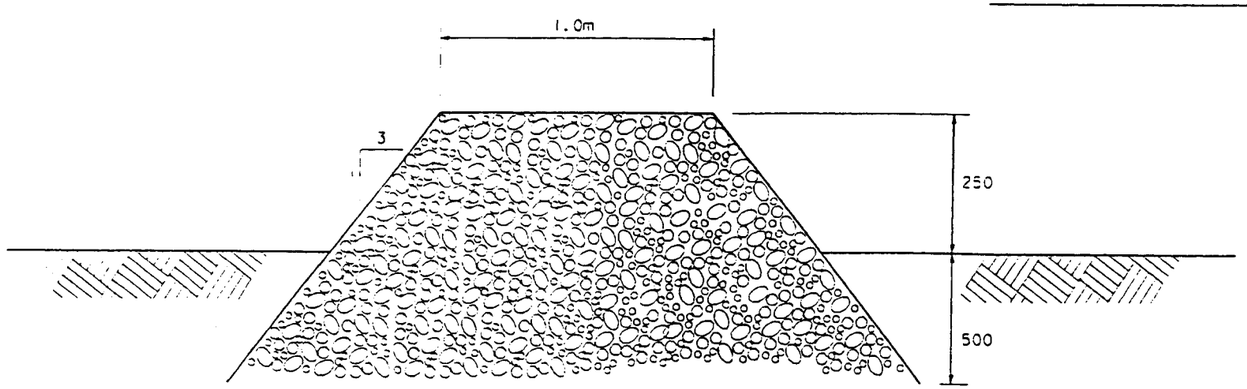

RSP (FACING, METHOD B) DEFLECTION BERM

G1 INLET WITHIN AC OVERSIDE DRAIN

DRAINAGE DETAILS

NO SCALE

CALCULATED/ DESIGNED BY	AMW	DATE 3/98	REVISED BY	DATE REVISED
CHECKED BY	SMT	3/98		

DESIGN OVERSIGHT

STATE OF CALIFORNIA - DEPARTMENT OF TRANSPORTATION

Caltrans

$TIMES $FILES

DIST	COUNTY	ROUTE	KILOMETER POST TOTAL PROJECT	SHEET NO.	TOTAL SHEET
11	SD	5	70.9		

REGISTERED CIVIL ENGINEER

PLANS APPROVAL DATE

REGISTERED PROFESSIONAL ENGINEER A.M. WALKER No. 57716 Exp. 12-31-01 CIVIL STATE OF CALIFORNIA

ROBERT BEIN, WILLIAM FROST & ASSOCIATES
14725 ALTON PARKWAY
IRVINE, CA 92618

The State of California or its officers or agents shall not be responsible for the accuracy or completeness of electronic copies of this plan sheet.

Caltrans Metric

DRAINAGE SYSTEM NO	DRAINAGE UNIT	ABANDONED DRAINAGE FACILITY	REMOVE CULVERT (m)	REMOVE PIPE (m)			CLASS "A" CONCRETE STRUCTURE	MINOR CONCRETE STRUCTURE (m³)	MISC IRON AND STEEL (kg)	MINOR CONCRETE MISC CONSTRUCTION (m³)		FRAMES, GRATES AND COVERS: MH FRAME AND COVER (EA)	DITCHES RACK CAGE (EA)	INLET GRATE (EA)	INLET FRAME AND COVER (EA)	STAINLESS STEEL MH FRAME & COVER (EA)	RSP: FACING METHOD B (m²)	LIGHT METHOD B (m²)	GROUTED FACING METHOD B (m²)	FILTER FABRIC	TYPE V: 450 mm (m)	750 mm (m)	600 mm (m)	RCP: 450 mm (m)	750 mm (m)	600 mm (m)															ALUMINIZED CSP GAUGE 10: 450 mm (m)	750 mm (m)	1200 mm (m)	CSP: 450 mm (RISER) (m)	1200 mm (RISER) (m)	600 mm (RISER)	PIPE JOINT CLASSIFICATION	CANAL GATE (EA)	BRICK & MORTAR SEAL		HEIGHT OF INLET "H" (m)	MAXIMUM COVER (m)	DESCRIPTION	LOCATION	DRAINAGE PLAN SHEET NO	DRAINAGE SYSTEM NO	DRAINAGE UNIT
50	a							2.30								1																																		0.9		PIPE ENTRANCE TO BASIN	N602507.7435/E1901946.5673		50	a
	b																					9																													0.5					b
	c							0.50							1																																		1.1		TYPE L-2 COLLAR	N602512.2877/E1901944.5550			c
	d																					38																																		d
	e																																																	1.2	MOD GMP INLET	N602554.0055/E1901933.5808			e
	f																					54																																		f
	g							2.60								1																																		1.8		MOD GMP INLET	N602607.3142/E1901920.5418			g
	h																					57																													1.3					h
	i							0.60							1																																		1.9		MOD GMP INLET	N602662.9610/E1901906.9309			i
	j																									60																								1.3					j
	k							0.50					1																																				1.4		MOD GMP INLET	N602717.0312/E1901877.7264			k
	l																																																	0.8					l
	m							2.30								1										52																								1.3					m
	n																																																	0.8	MOD GMP INLET	N602763.6024/E1901852.5733			n
	o							2.30								1										53																								1.4					o
	p																					10																															MOD GMP INLET	N602811.5192/E1901826.6913			p
	q							0.90	34																																														q
SHEET TOTAL																																																				SHEET TOTAL				

DRAINAGE QUANTITIES

STATE OF CALIFORNIA - DEPARTMENT OF TRANSPORTATION

Caltrans

CALCULATED/DESIGNED BY TJR 3/98 DATE REVISED BY
CHECKED BY AMW 3/98 DATE REVISED

DESIGN OVERSIGHT

ALL DIMENSIONS ARE IN METERS UNLESS OTHERWISE SHOWN

Caltrans Metric

DIST	COUNTY	ROUTE	KILOMETER POST TOTAL PROJECT	SHEET NO.	TOTAL SHEETS
11	SD	5	70.9		

REGISTERED CIVIL ENGINEER

PLANS APPROVAL DATE

REGISTERED PROFESSIONAL ENGINEER HILBERT W. DICKSON No. 19417 Exp. 9-30-01 CIVIL STATE OF CALIFORNIA

ROBERT BEIN, WILLIAM FROST & ASSOCIATES
14725 ALTON PARKWAY
IRVINE, CA 92618

The State of California or its officers or agents shall not be responsible for the accuracy or completeness of electronic copies of this plan sheet.

LEGEND

- —DIRECTION OF TRAFFIC
- —TEMP CRASH CUSHION (ARRAY PER PLAN)
- —CHANNELIZER (SURFACE MOUNTED) OR DRUM
- —CONSTRUCTION AREA SIGN (SIZE PER PLAN)
- —TEMP RAILING (TYPE K) WITH SCUPPERS
- (00) —EXISTING TRAFFIC STRIPING DETAIL NUMBER
- (00) —SIGN NUMBER

NOTES

1. PLACE TEMP RAILING (TYPE K) WITH SCUPPERS AT EDGE OF STRIPING DETAIL 27B.
2. INSTALL CONSTRUCTION AREA SIGN
3. CLOSURE OF RIGHT LANE ADJACENT TO THE SHOULDER OR CLOSURE OF OFF-RAMP SHALL BE IN ACCORDANCE WITH STANDARD PLANS T10 AND 14.

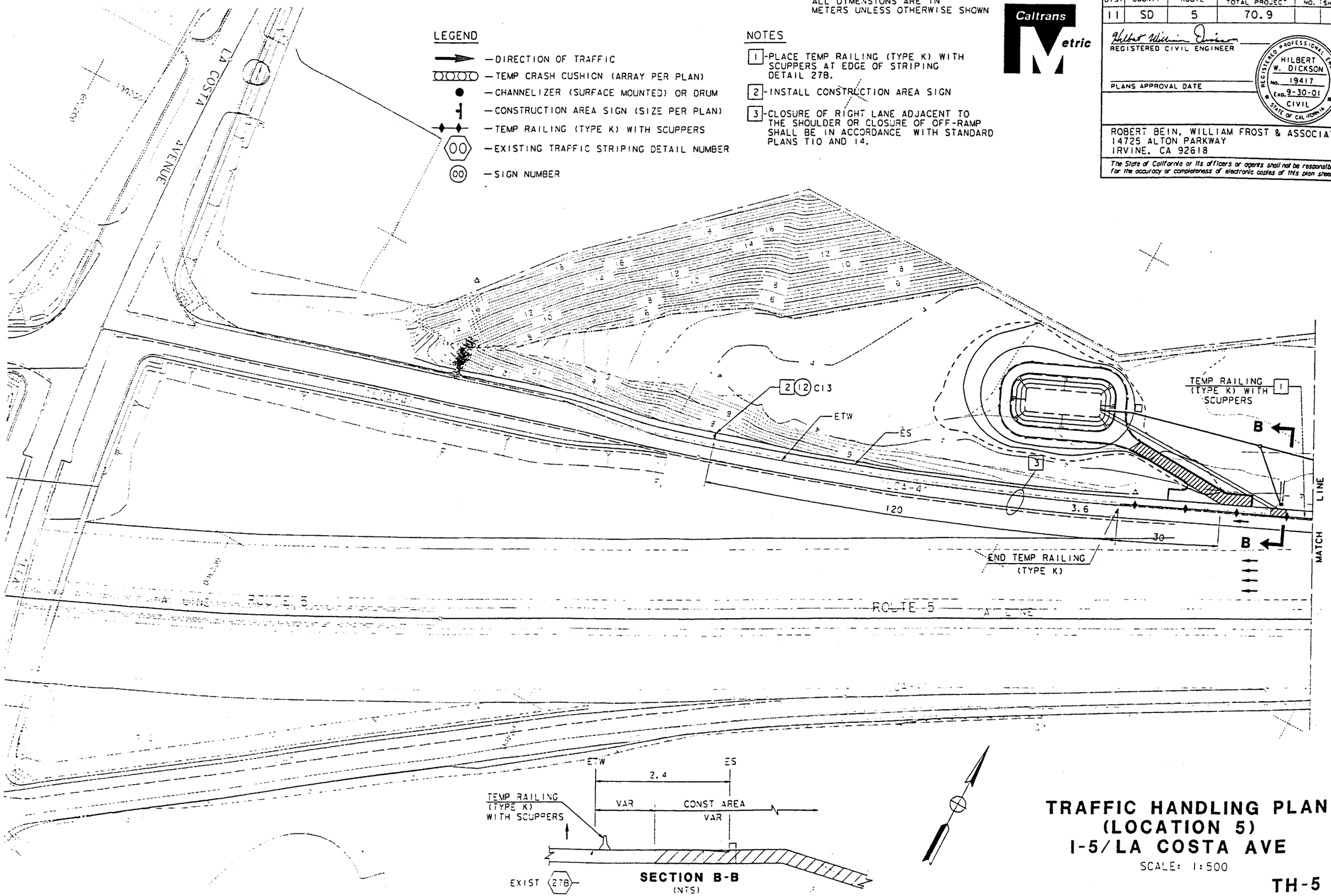

TRAFFIC HANDLING PLAN (LOCATION 5) I-5/LA COSTA AVE

SCALE: 1:500

TH-5

DATE	REVISED BY	DATE	REVISED BY
3/98	HWD	3/98	HWD

CALCULATED/DESIGNED BY — CHECKED BY

DESIGN OVERSIGHT

STATE OF CALIFORNIA - DEPARTMENT OF TRANSPORTATION

Caltrans

ALL DIMENSIONS ARE IN METERS UNLESS OTHERWISE SHOWN

Caltrans Metric

DIST	COUNTY	ROUTE	KILOMETER POST TOTAL PROJECT	SHEET NO.	TOTAL SHEETS
11	SD	5	70.9		

REGISTERED CIVIL ENGINEER

PLANS APPROVAL DATE

REGISTERED PROFESSIONAL ENGINEER HILBERT W. DICKSON NO. 19417 EXP. 9-30-01 CIVIL STATE OF CALIFORNIA

ROBERT BEIN, WILLIAM FROST & ASSOCIATES
14725 ALTON PARKWAY
IRVINE, CA 92618

The State of California or its officers or agents shall not be responsible for the accuracy or completeness of electronic copies of this plan sheet.

LEGEND

- —DIRECTION OF TRAFFIC
- —TEMP CRASH CUSHION (ARRAY PER PLAN)
- —CHANNELIZER (SURFACE MOUNTED) OR DRUM
- —CONSTRUCTION AREA SIGN (SIZE PER PLAN)
- —TEMP RAILING (TYPE K) WITH SCUPPERS
- —EXISTING TRAFFIC STRIPING DETAIL NUMBER
- —SIGN NUMBER

NOTES

1. -PLACE TEMP RAILING (TYPE K) WITH SCUPPERS AT EDGE OF STRIPING DETAIL 27B.
2. -INSTALL CONSTRUCTION AREA SIGN
3. -CLOSURE OF RIGHT LANE ADJACENT TO THE SHOULDER OR CLOSURE OF OFF-RAMP SHALL BE IN ACCORDANCE WITH STANDARD PLANS T10 AND 14.

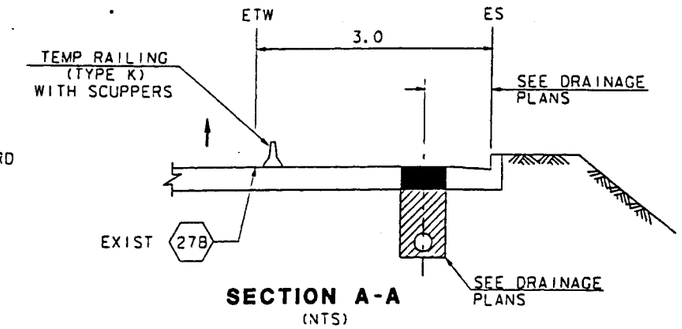

SECTION A-A
(NTS)

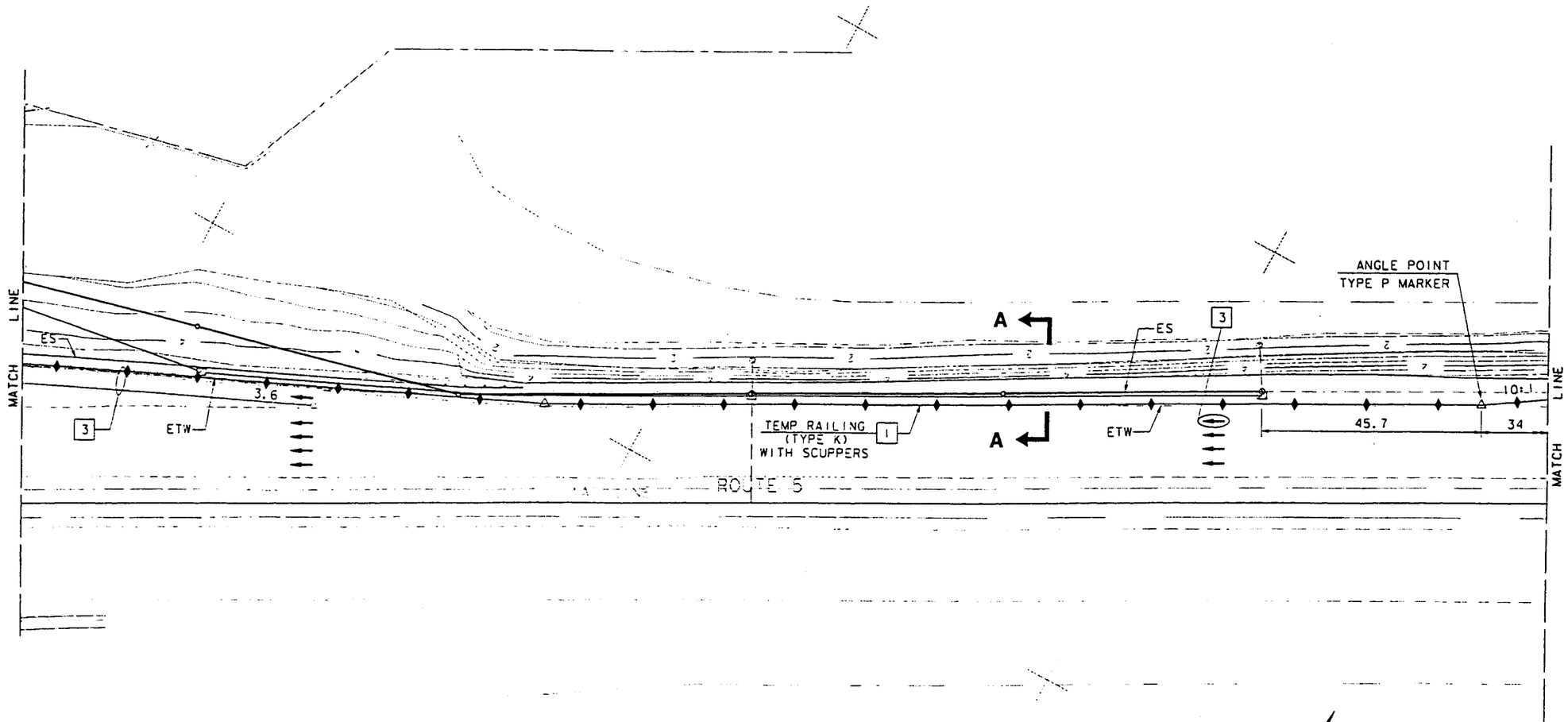

TRAFFIC HANDLING PLAN (LOCATION 5) I-5/LA COSTA AVE

SCALE: 1:500

TH-6

DESIGN OVERSIGHT

CALCULATED/DESIGNED BY | CHECKED BY

REVISED BY | DATE REVISED

DATE 3/98 | HWD 3/98

STATE OF CALIFORNIA DEPARTMENT OF TRANSPORTATION

Caltrans

ALL DIMENSIONS ARE IN METERS UNLESS OTHERWISE SHOWN

Caltrans Metric

DIST	COUNTY	ROUTE	KILOMETER POST TOTAL PROJECT	SHEET NO.	TOTAL SHEETS
11	SD	5	70.9		

REGISTERED CIVIL ENGINEER

PLANS APPROVAL DATE

REGISTERED PROFESSIONAL ENGINEER HILBERT W. DICKSON No. 19417 Exp. 9-30-01 CIVIL STATE OF CALIFORNIA

ROBERT BEIN, WILLIAM FROST & ASSOCIATES
14725 ALTON PARKWAY
IRVINE, CA 92618

The State of California or its officers or agents shall not be responsible for the accuracy or completeness of electronic copies of this plan sheet.

LEGEND

- —DIRECTION OF TRAFFIC
- —TEMP CRASH CUSHION (ARRAY PER PLAN)
- —CHANNELIZER (SURFACE MOUNTED) OR DRUM
- —CONSTRUCTION AREA SIGN (SIZE PER PLAN)
- —TEMP RAILING (TYPE K) WITH SCUPPERS
- —EXISTING TRAFFIC STRIPING DETAIL NUMBER
- —SIGN NUMBER

NOTES

1. PLACE TEMP RAILING (TYPE K) WITH SCUPPERS AT EDGE OF STRIPING DETAIL 27B.
2. INSTALL CONSTRUCTION AREA SIGN
3. CONTRACTOR MAY CLOSE RIGHT LANE ADJACENT TO THE SHOULDER OR CLOSE OFF-RAMP BETWEEN HOURS OF 10:30 PM AND 4:00 AM THE FOLLOWING MORNING, MONDAY THROUGH THURSDAY FOR MATERIAL LOADING AND UNLOADING. CLOSURES SHALL BE IN ACCORDANCE TO STANDARD PLANS T10 AND 14.

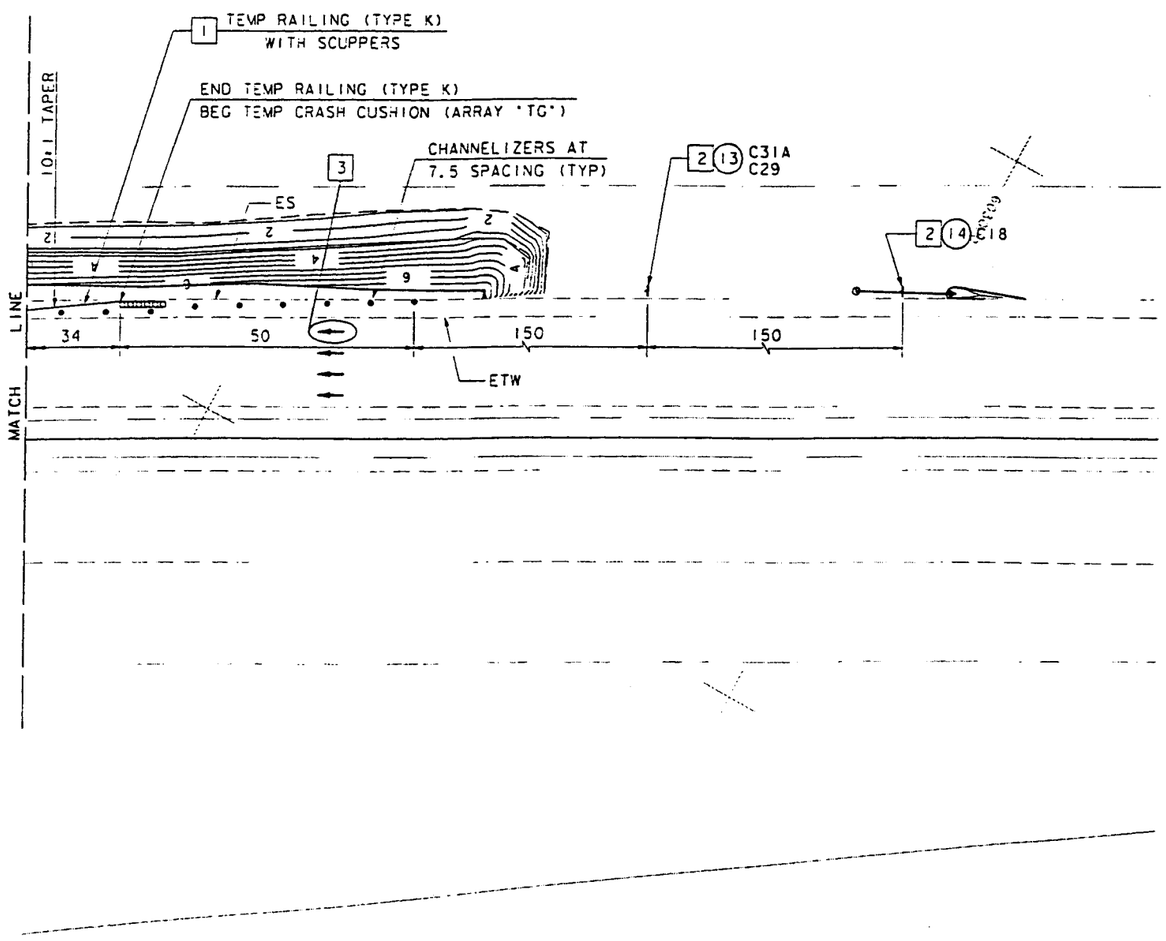

TRAFFIC HANDLING PLAN (LOCATION 5) I-5/LA COSTA AVE

SCALE: 1:500

TH-7

CALCULATED/ DESIGNED BY	HWD	3/98	REVISED BY	DATE
CHECKED BY	HWD	3/98	DATE REVISED	

DESIGN OVERSIGHT

STATE OF CALIFORNIA - DEPARTMENT OF TRANSPORTATION

Caltrans

R 98 14:44:24 g:\grpl\pdata\34358\dgn\dlv\01in07.dlv

ALL DIMENSIONS ARE IN METERS UNLESS OTHERWISE SHOWN

Caltrans Metric

DIST	COUNTY	ROUTE	KILOMETER POST TOTAL PROJECT	SHEET NO.	TOTAL SHEETS
11	SD	VAR	VAR		

REGISTERED CIVIL ENGINEER

PLANS APPROVAL DATE

REGISTERED PROFESSIONAL ENGINEER MIKE CHESNEY No. 48913 Exp. 9-30-00 CIVIL STATE OF CALIFORNIA

ROBERT BEIN, WILLIAM FROST & ASSOCIATES
14725 ALTON PARKWAY
IRVINE, CA 92618

The State of California or its officers or agents shall not be responsible for the accuracy or completeness of electronic copies of this plan sheet.

REVISED BY	DATE REVISED

CALCULATED/DESIGNED BY	MC	DATE 3/98
CHECKED BY	MC	3/98

DESIGN OVERSIGHT

STATE OF CALIFORNIA - DEPARTMENT OF TRANSPORTATION

Caltrans

TRAFFIC HANDLING

SHEET NO	TEMP RAILING (TYPE K) WITH SCUPPERS	CHANNELIZER (SURFACE MOUNTED)	TEMPORARY CRASH CUSHION MODULES ARRAY TG	TH	TJ
	M	EA	EA	EA	EA
TH-1	140	6			1
TH-2	172	16	1	1	
TH-3					
TH-4	115	11	1		
TH-5	57				
TH-6	323				
TH-7	16	9	1		
TOTAL	823	42	3	1	1

CONSTRUCTION AREA SIGNS & QUANTITIES

SHEET NO	SIGN NO ○	CODE	PANEL SIZE (mm)	NO OF WOOD POSTS PER SIGN 89x140	REMARKS
TH-1	1	C18	900x900	1	
TH-1	2	C31A	900x900	1	
TH-1	2	C29	500x180	1	"550 FT"
TH-1	3	C13	1200x450	1	
TH-2	4	C18 (MOD)	900x900	1	"RAMP CONSTRUCTION AHEAD"
TH-2	5	C31A	900x900	1	
TH-2	6	C18	900x900	1	
TH-2	7	C31A	900x900	1	
TH-2	7	C29	500x180	1	"300 FT"
TH-2	8	C13	1200x450	2	
TH-4	9	C18	900x900	1	
TH-4	10	C31A	900x900	1	
TH-4	11	C13	1200x450	2	
TH-5	12	C13	1200x450	2	
TH-7	13	C31A	900x900	1	
TH-7	13	C29	500x180	1	"650 FT"
TH-7	14	C18	1200x1200	2	
SUBTOTAL					

ROADWAY ITEMS

LOCATION	DESCRIPTION	ASPHALT CONC (TYPE B) m^2	AGGREGATE BASE (CLASS 2) m^2	PLACE AC DIKE (TYPE A) m	150mm PCC DRIVEWAY m^2	RECONSTRUCT CHAIN LINK FENCE m	ROADWAY EXCAVATION m^3
1	I-5/MANCHESTER WEST	770	770				4492
2	I-5/MANCHESTER EAST	610	610				1763
3	I-5/SR-56	450	450	125		55	
4	I-15/SR-78	982	982				5025
5	I-5/LA COSTA	291	291				2028
TOTAL		3093	3093	125		55	13808

SUMMARY OF QUANTITIES

ALL DIMENSIONS ARE IN METERS UNLESS OTHERWISE SHOWN

Caltrans Metric

DIST	COUNTY	ROUTE	KILOMETER POST TOTAL PROJECT	SHEET NO.	TOTAL SHEETS
11	SD	VAR	VAR		

REGISTERED CIVIL ENGINEER

PLANS APPROVAL DATE

REGISTERED PROFESSIONAL ENGINEER MIKE CHESNEY No. 48913 Exp. 9-30-00 CIVIL STATE OF CALIFORNIA

ROBERT BEIN, WILLIAM FROST & ASSOCIATES
14725 ALTON PARKWAY
IRVINE, CA 92618

The State of California or its officers or agents shall not be responsible for the accuracy or completeness of electronic copies of this plan sheet.

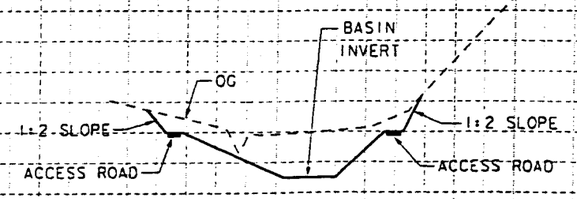

LOCATION NO 1
(MANCHESTER EAST)
SECTION A-A

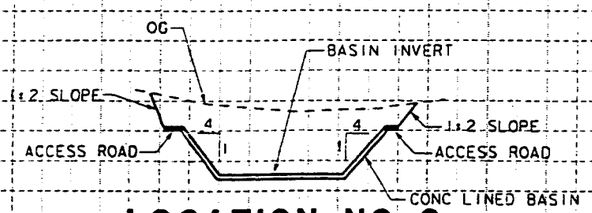

LOCATION NO 2
(MANCHESTER WEST)
SECTION B-B

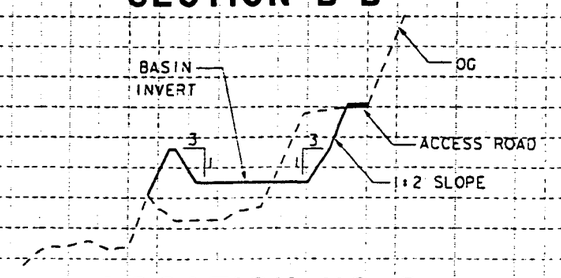

LOCATION NO 3
(I-5/SR-56)
SECTION C-C

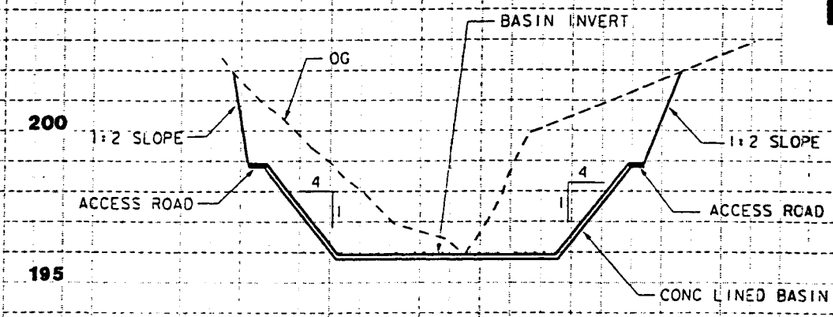

LOCATION NO 4
(I-5/SR-78)
SECTION D-D

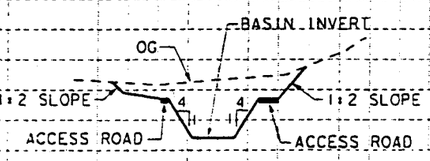

LOCATION NO 5
(I-5/LA COSTA)
SECTION E-E

DRAINAGE CROSS SECTIONS

SCALE: HORIZ 1:500
VERT 1:100

X-1

DATE	REVISED BY	DATE REVISED
3/98		3/98

CALCULATED/DESIGNED BY: CRC
CHECKED BY: MC
DESIGN OVERSIGHT

STATE OF CALIFORNIA - DEPARTMENT OF TRANSPORTATION

Caltrans

Station

Appendix A.4
Pilot Project Listings
Project Procurement/PSE Definitions

Retrofit Pilot Program
District 7 Sites

3/2/98

PROJECT	CONSULTANT	DESCRIPTION	LOCATION	CONSTRUCTION COST (Caltrans PS&E)	CONSTRUCTION COST (Procurement)
1	MW	**Trapping Catchbasins and Infiltration Basin**			
PS&E		Site 1: Trapping Catchbasins	I-210 E&W, west of Orcas Ave.	320,000	
			I-210 W, east of Orcas Ave.		
		Site 2: Trapping Catchbasins	I-210 E&W, east of Filmore St.	320,000	
			I-210 E&W, east of Van Nuys Blvd.		
		Site 3: Infiltration Basin	I-605 NB/SR 91 WB Connector	355,000	
			PROJECT 1 SUBTOTALS	**995,000**	
2	B&C	**Extended Detention Basins**			
PS&E		Site 1: Extended Detention Basin	I-5/I-605 Interchange, between I-5 SB and	282,000	
			I-5 SB/I-605 SB connector ramps		
		Site 2: Extended Detention Basin	I-605/SR 91 Interchange, between I-605 SB and	282,000	
			SR 91EB /I-605 SB connector ramp		
			PROJECT 2 SUBTOTALS	**564,000**	
3	MW	**Infiltration Trench, Biofilters, and Catchbasin Inserts**			
Procurement		Site 1: Infiltration Trench	Altadena Maintenance Station		50,000
		Site 2: Biofiltration Strip	Altadena Maintenance Station		105,000
		Site 3: Biofiltration Strip	I-605 NB, south of SR 91 WB Connector		105,000
		Site 4: Biofiltration Swale	Cerritos Maintenance Station		75,000
		Site 5: Biofiltration Swale	I-605 NB/SR 91 WB Connector		75,000
		Site 6: Biofiltration Swale	I-5 SB/I-605 SB Onramp		75,000
		Site 7: Biofiltration Swale	I-605 SB between Carson St. and Del Amo Blvd.		75,000
		Site 8: Catchbasin Inserts	Foothill Maintenance Station		7,500
		Site 9: Catchbasin Inserts	Las Flores Maintenance Station		7,500
		Site 10: Catchbasin Inserts	Rosemead Maintenance Station		7,500
			PROJECT 3 SUBTOTALS		**582,500**
4	B&C	**Media Filters,Oil/Water Separator, MCTTs**			
Procurement		Site 1: Media Filter	Eastern Regional Maintenance Station		150,000
		Site 2: Media Filter	Foothill Maintenance Station		150,000
		Site 3: Media Filter	Termination Park & Ride (I-105/I-605 Interchange)		150,000
		Site 4: Media Filter	Paxton Park & Ride (I-210/SR118)		150,000
		Site 5: Oil/Water Separator	Alameda Maintenance Station		75,000
		Site 6: MCTT	Lakewood Park & Ride (I-5 & Lakewood)		85,000
		Site 7: MCTT	Metro Maintenance Station		85,000
		Site 8: MCTT	Via Verde Park & Ride (I-210 & Via Verde)		85,000
			PROJECT 4 SUBTOTALS		**930,000**
			TOTAL	**1,559,000**	**1,512,500**

Retrofit Pilot Program
District 11 Sites

3/11/98

PACKAGE No. (Design)	PROJECT No. (District 11 Program)	District 7 Stipulation Site	DESCRIPTION	LOCATION	CONSTRUCTION COST (PS&E - Package 1)	CONSTRUCTION COST (Procurement - Package 2)
	1		**Extended Detention Basins and Biofilter**			
1			Site 1: Extended Detention Basin	I-15/SR78 Interchange	282,000	
1			Site 2: Extended Detention Basin	I-5 NB at Manchester Avenue	282,000	
2		X	Site 3: Biofiltration Swale	I-5 SB at Palomar Airport Road		75,000
	2		**Infiltration Trench and Biofilters**			
2		X	Site 1: Infiltration Trench	Carlsbad Maintenance Station		50,000
2		X	Site 2: Biofiltration Strip	Carlsbad Maintenance Station		105,000
2		X	Site 3: Biofiltration Swale	SR 78 EB at Melrose Place		75,000
	3		**Extended Detention/Infiltration Basins**			
1			Site 1: Extended Detention Basin	I-5/SR 56	282,000	
1		X	Site 2: Infiltration Basin	I-5 SB at La Costa Blvd.	355,000	
	4		**Wet Basin**			
1			Site 1: Wet Basin	I-5 SB at Manchester Avenue	355,000	
	5		**Media Filters**			
2		X	Site 1: Media Sand Filter	Escondido Maintenance Station		150,000
2		X	Site 2: Media Sand Filter	I-5 SB/SR 78 Park & Ride		150,000
2			Site 3: Media Sand Filter	I-5 NB at La Costa Blvd. Park & Ride		150,000
2			Site 4: Compost Filter	Kearny Mesa Maintenance Station		200,000
				TOTAL PACKAGE COST	**1,556,000**	**955,000**

Appendix A.5
Detailed Project Calendar

March 1998

Sunday	Monday	Tuesday	Wednesday	Thursday	Friday	Saturday
1	2	3	4	5	6	7
8	9	10	11	12	13	14
15	16 • D11 procurement AEI submittal to District • D11 PSE RBF submittal to District	17	18	19	20 • *LMPS DRAFT #1 DETAILED STUDY PLAN*	21
22	23	24 • **Retrofit Status Report (1) to Plaintiffs**	25 • D7 BCC PSE to District • D7 MW PSE submittal to District	26	27	28
29	30 9:00am - 12:00pm **SD Retrofit Pilots Status Meeting** [Sacramento] 1:00pm - 4:00pm **LA Retrofit Pilots Status Meeting** [Sacramento]	31 9:00am - 5:00pm *LMPS FIELD REVIEW* [LA] • *COMMENTS NEEDED FOR LMPS DRAFT #1* • D11 PSE & Procurements District comments to RBF & AEI				

Yulya Davidova 3/19/98

(C) Copyright 1994 Novell, Inc.

April 1998

Sunday	Monday	Tuesday	Wednesday	Thursday	Friday	Saturday
			1 10:00am - 12:00pm **Abatement Districts Meeting** [RBF, Irvine] 1:30pm - 4:00pm EC TAG mtg [W-C, Santa Ana]	**2** • D7 BCC Procurements to District (4/1)	**3** 1:00pm - 3:00pm *LMPS TAG TELECONFERENCE* [(916) 657-4101]	**4**
5	**6**	**7** • EC draft Sec. 1-3 issued • **D11 AEI revised Procurement to District & Plaintiffs** • **D11 RBF revised PSE to District & Plaintiffs**	**8** • D7 PSE District comments to BCC • D7 Districts comments on MW PSE • D7 MW Procurement to District	**9** 9:00am - 3:00pm EC field rev. (flex 7-10) [LA] 9:00am - 5:00pm *LMPS FIELD REVIEW FLEX 7-10* [LA] • *LMPS DRAFT #2 DETAILED STUDY PLAN*	**10** • EC draft Sec.4 issued	**11**
12	**13**	**14** • **D11 PSE Plaintiffs comments due**	**15** • **D7 BCC revised PSE to District and NRDC** • **D7 MW revised PSE to District and NRDC** • D7 Districts comments on BCC Procurements	**16** • *COMMENTS NEEDED FOR LMPS DRAFT #2*	**17** • EC sec. 1-4 cmmts due	**18**
19	**20** 9:00am - 3:00pm EC field rev (flex 20, 22-24, 27) [LA] 9:00am - 5:00pm *LMPS FIELD REVIEW FLEX 20, 23, 24* [LA]	**21** • D11 PSE District's comments due	**22** • **D7 NRDC comments due on BCC PSE** • **D7 NRDC comments on MW PSE due** • **D7 BCC revised Procurements to District & NRDC**	**23** • D7 Districts comments on MW Procurements due (4/22) • D7 District's comments on MW Procurements (4/22)	**24** • EC response to cmmts issued	**25**
26	**27**	**28** • D11 Final PSE to District	**29** • D7 District comments on BCC PSE • D7 Districts comments on MW PSE • **D7 MW revised Procurement to District & NRDC**	**30** • *LMPS DRAFT #3 DETAILED STUDY PLAN* • EC final cmmts due, Sec 1-4		

Yulya Davidova 3/19/98

(C) Copyright 1994 Novell, Inc.

May 1998

Sunday	Monday	Tuesday	Wednesday	Thursday	Friday	Saturday
					1 • D11 Procurement Plaintiff's comments due	2
3	4	5 9:00am - 3:00pm EC final field rev (flex 4-6) [LA] • D11 PSE	6 9:00am - 5:00pm *LMPS FINAL FIELD REVIEW FLEX 6-8* [LA] • D7 BCC final PSE to District • D7 MW final PSE to District	7 • *COMMENTS NEEDED FOR LMPS DRAFT #3*	8 • D11 Procurement to encroachment permits	9
10	11 • D11 PSE ready to list	12	13 • Initiate O&M preparation for retrofit pilots • D7 BCC PSE • D7 MW PSE	14	15 • D11 Procurement Encroachment Permit Issued	16
17	18 • *LMPS FINAL DETAILED STUDY PLAN* • EC final detailed study plan • **D7 NRDC comments on BCC Procurements**	19 • D7 MW & BCC PSE ready to list (4/18)	20	21	22 • EC Draft field and lab design • D7 NRDC Comments on MW Proc due • D7 BCC Proc to Encroachment Permits	23
24	25	26	27	28	29 • D7 MW Procurements to Encroachment Permits • D7 BCC Procurements Permits Issued	30
31						

Yulya Davidova 3/19/98

(C) Copyright 1994 Novell, Inc.

June 1998

Sunday	Monday	Tuesday	Wednesday	Thursday	Friday	Saturday
	1 • **D7 PSE Supplemental Report to Plaintiffs** • **D11 PSE Supplemental Report to Plaintiffs**	2	3	4	5	6
7	8 • D7 MW Procurements Permits Issued	9	10 • **D7 PSE Decision Point** • D11 PSE Decision Point	11	12	13
14	15	16	17	18	19 • <u>EC final field and lab design</u> • **D11 Proc - First Decision Point** • **D7 BCC Procurement Supplemental Report to NRDC**	20
21	22 • D7 BCC PSE Advertisement • D11 PSE Advertisemen t	23	24	25	26	27
28	29 • D7 MW PSE Advertise	30 • **D7 BCC Procurement -First Decision Point** • **D7 MW Procurements Supplemental Report to NRDC**				

Yulya Davidova 3/19/98

(C) Copyright 1994 Novell, Inc.

July 1998

Sunday	Monday	Tuesday	Wednesday	Thursday	Friday	Saturday
			1	2	3	4
5	6	7	8	9	10 • D7 MW Procurements - First Decision Point	11
12	13	14	15	16 • D7 BCC PSE Bid Opening • D11 PSE Bid Opening	17	18
19	20	21	22	23 • D7 MW PSE Bid Opening	24	25
26	27	28	29	30	31	

Yulya Davidova 3/19/98

(C) Copyright 1994 Novell, Inc.

August 1998

Sunday	Monday	Tuesday	Wednesday	Thursday	Friday	Saturday
						1
2	3 • D11 Procurement Begin Construction • D7 BCC Procurement Begin Construction	4	5	6 • D7 BCC PSE Award • D11 PSE Award	7	8
9	10 • **Draft O&M for Retrofit Pilot Submitted to Plaintiffs**	11	12	13 • D7 BCC PSE Execution • D11 PSE Execution • D7 MW PSE Award	14	15 • D7 MW Procurements Begin Construction
16	17	18 • D7 BCC PSE Begin Construction • D11 PSE Begin Construction	19	20 • D7 MW PSE Execution	21	22
23	24	25 • D7 MW PSE Begin Construction	26	27	28	29
30	31					

Yulya Davidova 3/19/98

(C) Copyright 1994 Novell, Inc.

September 1998

Sunday	Monday	Tuesday	Wednesday	Thursday	Friday	Saturday
		1 9:00am - 12:00pm **SD Retrofit Pilot Status Meeting** 1:00pm - 4:00pm **LA Retrofit Pilots Status Meeting** • **D7 &D11 Status Construction**	2	3	4	5
6	7	8	9	10	11	12
13	14	15 • **Comments on Draft O&M are due from Plaintiffs**	16	17	18	19
20	21	22	23	24	25	26
27	28	29	30			

Yulya Davidova 3/19/98

(C) Copyright 1994 Novell, Inc.

October 1998

Sunday	Monday	Tuesday	Wednesday	Thursday	Friday	Saturday
				1 • D7 & D11 Status Construction Reports to Plaintiffs	2	3
4	5	6	7	8	9	10
11	12	13	14	15	16	17
18	19	20	21	22	23	24
25	26	27	28	29	30	31

Yulya Davidova 3/19/98

(C) Copyright 1994 Novell, Inc.

November 1998

Sunday	Monday	Tuesday	Wednesday	Thursday	Friday	Saturday
1 • D7 &D11 Status Construction Reports to Plaintiffs	2 • O&M manual finalized	3	4	5	6	7
8	9 • D7 Site Visits	10 • D7 Site Visits	11 • D11 Site Visits	12	13	14
15	16	17	18 • D7 PSE & Procurement Second Decision Point • D11 PSE & Procurement Second Decision Point	19	20	21
22	23	24	25	26	27	28
29	30					

Yulya Davidova 3/19/98

(C) Copyright 1994 Novell, Inc.

December 1998

Sunday	Monday	Tuesday	Wednesday	Thursday	Friday	Saturday
		1 • D7 and D11 Start Monitoring • **D7 & D11 Status Construction Reports to Plaintiffs**	2	3	4	5
6	7	8	9	10	11	12
13	14	15	16	17	18	19
20	21	22	23	24	25	26
27	28	29	30	31		

Yulya Davidova 3/19/98

(C) Copyright 1994 Novell, Inc.

District 7 BMP Retrofit Pilot Projects
Project Staging Plan

Overview

It is recognized by Caltrans and NRDC that technical or construction issues may arise in the development of the BMP Retrofit Pilot projects that would necessitate the delay in the delivery of a pilot project. Accordingly, the project master schedule has been developed in two forms, a primary or target schedule, and a contingency schedule. The primary schedule is a four-year target schedule designated for the Retrofit Pilot Projects. The contingency schedule provides flexibility within the program to deliver some of the projects on a delayed basis as compared to the primary schedule to accommodate project delays while still delivering the entire project within the Stipulated five-year period.

Project Staging

Three 'decision points' have been identified where discrete pilot projects may be shifted from the primary schedule to the contingency schedule. Discussion of the projects relative to the stated criteria will be initiated in the March 30, 1998 status meeting. Each of these decision points, along with the criteria to be used to identify candidate contingency schedule projects is given as follows:

Decision Point No. 1- Post Design, Preconstruction

Date: June 10, 1998

Decision Point Criteria

- Pilot has fundamental design/siting flaw
- Design/plans/specifications not complete
- Siting not complete

Discussion

This will be the primary decision point for deferring pilots to the Contingency Schedule. Pilots that proceed beyond this decision point will be 'committed' for the bid and construction process, with relatively fewer options for delay at the second decision point. Issues indicating delay at this decision point will be design related, focusing on incomplete, delayed or other design problems. Pilots may be delayed within this decision point time frame should bid problems occur, such as contractor bids not in substantial agreement with the engineer's estimate.

Decision Point No. 2 – Pre-monitoring

Date: November 18, 1998

Decision Point Criteria

- Pilot construction delayed (construction delays)
- Pilot construction flawed
- Pilot not ready for monitoring
- Delays/problems installing/configuring sampling equipment
- Bid process problem

Discussion

This decision point will occur post-construction but prior to commencement of monitoring. Primary issues indicating delay to the contingency schedule at this point are related to the suitability of the site to begin monitoring. Examples could include incomplete construction, site not properly stabilized, incomplete growth of biofilters, or problems with monitoring equipment. Pilots may also be delayed within this decision point time frame should bid problems occur, such as contractor bids not in substantial agreement with the engineer's estimate. Pilots delayed at this decision point would track with the monitoring portion of the Contingency schedule once construction problems were completed. Note that no substantial construction of the pilots will occur during the winter season (December through March).

Decision Point 3 – End of First Year of Monitoring

Date: June 1, 1999

Decision Point Criteria

- First year monitoring data unsatisfactory
- Substantial sampling equipment failures
- Operational problems with Pilot
- Maintenance problems with pilot

Discussion

This decision point will occur following the first year of monitoring and following a sufficient amount of time to assess the first-year monitoring data. This decision point is not an option for those pilots on the Contingency schedule. Pilots that are agreed to meet the criteria listed above at this decision point will track with the monitoring portion of the Contingency schedule for a third year of monitoring. It is expected that the primary

reason for a third year of monitoring would be problems associated with storm water sampling/monitoring or maintenance and operation of the pilot.

Coord resp

Erwin to turn package around ASAP

District 7 and 11 Retrofit Pilot Program
Procurement Projects Schedule

	DISTRICT 7 PROJECT 3 Montgomery Watson		DISTRICT 7 PROJECT 4 Brown and Caldwell		DISTRICT 11 PACKAGE 2 AEI-CASC	
	Schedule	Actual/Notes	Schedule	Actual/Notes	Schedule	Actual/Notes
SUBMITTAL TO DISTRICT (MEETING)	4/8/98	4/8/98	4/8/98	4/8/98	3/16/98	3/16/98
DISTRICT COMMENTS TO CONSULTANTS (MEETING)	4/22/98	4/22/98	4/22/98	4/22/98	3/31/98	3/31/98
REVISED SUBMITTAL TO DISTRICT, NRDC, and EPA (District 11)	4/29/98	4/29/98	4/29/98	4/29/98	4/7/98	4/7/98
NRDC and EPA COMMENTS TO CALTRANS	5/22/98		5/22/98		5/1/98	5/1/98
Response to Comments to NRDC	5/29/98		5/29/98		5/8/98	5/8/98
Response to Comments Meeting with Plaintiffs	TBD		TBD		TBD	
FINAL CALTRANS COMMENTS TO CONSULTANTS	5/22/98	5/19/98	5/22/98		5/15/98	5/15/98
100% DESIGN TO DISTRICT OFFICE ENGINEER	6/8/98		6/8/98		5/11/98	5/11/98
PACKAGE TO ENCROACHMENT PERMITS	5/29/98		5/29/98		5/8/98	5/15/98
CONSTRUCTION ENCROACHMENT PERMITS ISSUED	6/8/98		6/8/98		Change to 6/20 from 5/15/1998	
DESIGN REPORTS - Complete Design Assumptions Submitted to NRDC	6/30/98		6/30/98		6/10/98	
Draft to Caltrans for Review	6/23/98		6/23/98		6/3/98	
1st DECISION POINT (Post Design - Pre-Construction)	Change to 7/10 from 6/30/98		Change to 7/10 from 6/30/98		6/20/98	
CONSTRUCT PROJECTS						
Prequalificantion/IFB					6/1/98	
Advertise					6/15/98	
Preproposal Conference					6/22/98	
Bid Opening					7/10/98	
Consultant Review Award					7/18/98	
Caltrans Review Award					7/25/98	
Notice to Proceed					7/27/98	
Begin Construction	8/1/98		8/15/98		8/3/98	
End Construction	11/30/98		11/30/98		11/30/98	
SUPPLEMENTAL REPORT - Construction Status and Problems Submitted to NRDC	11/11/98		11/11/98		11/11/98	
2nd DECISION POINT (Pre-Monitoring)	11/18/98		11/18/98		11/18/98	
START STORMWATER MONITORING	12/1/98		12/1/98		12/1/98	

5/19

District 7 and 11 Retrofit Pilot Program
PS and E Projects Schedule

	DISTRICT 7 PROJECT 1 Montgomery Watson		DISTRICT 7 PROJECT 2 Brown & Caldwell		DISTRICT 11 PACKAGE 1 RBF	
	Schedule	Actual/Notes	Schedule	Actual/Notes	Schedule	Actual/Notes
PS&E SUBMITTAL TO DISTRICT (MEETING)	3/18/98	3/25/98	3/18/98	3/25/98	3/16/98	3/16/98
DISTRICT COMMENTS TO CONSULTANTS (MEETING)	4/8/98	4/8/98	4/8/98	4/8/98	3/31/98	3/31/98
REVISED PS&E TO DISTRICT OFFICE ENGINEER, NRDC, and EPA (D 11)	4/15/98	4/15/98	4/15/98	4/15/98	4/7/98	4/7/98
NRDC and EPA COMMENTS TO CALTRANS	4/22/98	4/22/98	4/22/98	4/22/98	4/14/98	4/15/98
Response to Comments to NRDC	4/29/98	4/29/98	4/29/98	4/29/98	4/20/98	4/20/98
Response to Comments Meeting with Plaintiffs	4/30/98	4/30/98	4/30/98	4/30/98	4/30/98	4/30/98
DISTRICT OE COMMENTS TO CONSULTANTS	4/29/98	4/29/98	4/29/98	5/6/98	4/21/98	4/21/98
100% DESIGN TO DISTRICT OFFICE ENGINEER	5/6/98	5/7/98	5/6/98	5/6/98	4/28/98	4/28/98
Return Designs to Consultant		5/13/98		5/11/1998		
Resubmit Designs to Caltrans	5/22	5/18/98		5/15/98		
OE Final Review		5/19/98		5/18/98		
PS&E DESIGNS TO SACRAMENTO (HQOE)	5/13 ~~Change to 5/27/98 form~~	5/27	5/13 ~~5/22/98~~	5/27	5/5/98	5/8/98
READY TO LIST (RTL)	5/18/98	Expect Delays as much as two weeks 5/27	5/18/98	Expect Delays as much as two weeks 5/27	5/11/98	HQ OE has ~~plans for review~~ 5/11/98
DESIGN REPORTS - Complete Design Assumptions Submitted to NRDC	6/1/98		6/1/98		6/1/98	
Draft DESIGN REPORTS to Caltrans	5/18/98	In Progress	5/18/98	In Progress	5/18/98	5/15/98
1st DECISION POINT (Post Design - Pre-Construction)	6/10/98		6/10/98		6/10/98	
CONSTRUCT PROJECTS						
Advertise (ADV)	6/29/98		6/29/98		6/22/98	
Bid Opening (BO)	7/23/98		7/23/98		7/16/98	
Award (AW)	8/13/98		8/13/98		8/6/98	
Execute Contract (EX)	8/20/98		8/20/98		8/13/98	
Begin Construction (BC)	~~8/25/98~~ -9/1/98		8/25/98		8/18/98	
End Construction	11/30/98		11/30/98		11/30/98	
SUPPLEMENTAL REPORT - Construction Status and Problems Submitted to NRDC	11/11/98		11/11/98		11/11/98	
2nd DECISION POINT (Pre-Monitoring)	11/18/98		11/18/98		11/18/98	
START STORMWATER MONITORING	12/1/98		12/1/98		12/1/98	

*- eliminate

800K cut from 11

Retrofit Pilot Program
District 11 Sites

5/7/98

PROJECT No. (District 11 Program)	District 7 Stipulation Site	DESCRIPTION	LOCATION	B&C CONSTRUCTION COST ESTIMATE	ENGINEER'S COST ESTIMATE
1		**Extended Detention Basins and Biofilter**			
	X	Site 1: Extended Detention Basin	I-15/SR78 Interchange	251,000	498,000
		*Site 2: Extended Detention Basin**	*I-5 NB at Manchester Avenue*	*251,000*	*287,900* *
	X	Site 3: Biofiltration Swale	I-5 SB at Palomar Airport Road	64,000	~~156,000~~
			SUBTOTAL	**566,000**	**941,900**
2		**Infiltration Trench and Biofilters**			
	X	Site 1: Infiltration Trench	Carlsbad Maintenance Station	32,000	
	X	Site 2: Biofiltration Strip	Carlsbad Maintenance Station	64,000	143,500
	X	Site 3: Biofiltration Swale	SR 78 EB at Melrose Place	64,000	143,500 *
			SUBTOTAL	**160,000**	**287,000**
3		**Extended Detention/Infiltration Basins**			
		Site 1: Extended Detention Basin	I-5/SR 56	251,000	373,500
	X	Site 2: Infiltration Basin	I-5 SB at La Costa Blvd.	242,000	373,500
			SUBTOTAL	**493,000**	**747,000**
4		**Wet Basin**			
		*Site 1: Wet Basin**	*I-5 SB at Manchester Avenue*	*242,000*	*232,500* *
			SUBTOTAL	**242,000**	**232,500**
5		**Media Filters**			
	X	Site 1: Media Sand Filter	Escondido Maintenance Station	133,000	327,500
	X	Site 2: Media Sand Filter	I-5 SB/SR 78 Park & Ride	133,000	286,200
		Site 3: Media Sand Filter	I-5 NB at La Costa Blvd. Park & Ride	133,000	272,600
	X	Site 4: Compost Filter	Kearny Mesa Maintenance Station	200,000	247,400
			SUBTOTAL	**599,000**	**1,133,700**
			TOTAL PACKAGE COST	**2,060,000**	**3,342,100**
			TOTAL PACKAGE COST (no concrete lining at SR78)	**1,875,000**	**3,157,100**
			Total without wet basin and detention basin		**2,821,700**
			Total without wet basin and Manchester detention basin and no concrete lining at SR78		**2,636,700**

** Wet Basin and Manchester detention basin are on hold.*

800
300

2.6 million

Retrofit Pilot Program
Stipulation Sites

5/14/98

PROJECT	CONSULTANT	DESCRIPTION	LOCATION	B&C CONSTRUCTION COST ESTIMATE	ENGINEER'S COST ESTIMATE
1	MW	**Trapping Catchbasins and Infiltration Basin**			
		Site 1: Trapping Catchbasins	I-210 E&W, west of Orcas Ave.	305,000	90,000
			I-210 W, east of Orcas Ave.		89,300
		Site 2: Trapping Catchbasins	I-210 E&W, east of Filmore St.	305,000	116,000
			I-210 E&W, east of Van Nuys Blvd.		369,100
		Site 3: Infiltration Basin	I-605 NB/SR 91 WB Connector	242,000	406,500
			PROJECT 1 SUBTOTALS	**852,000**	**1,070,900**
2	B&C	**Extended Detention Basins**			
		Site 1: Extended Detention Basin	I-5/I-605 Interchange, between I-5 SB and	251,000	
			I-5 SB/I-605 SB connector ramps		
		Site 2: Extended Detention Basin	I-605/SR 91 Interchange, between I-605 SB and	251,000	
			SR 91EB /I-605 SB connector ramp		
			PROJECT 2 SUBTOTALS	**502,000**	**218,300**
3	MW	**Infiltration Trench, Biofilters, and Catchbasin Inserts**			
		Site 1: Infiltration Trench	Altadena Maintenance Station	32,000	237,400
		Site 2: Biofiltration Strip	Altadena Maintenance Station	84,000	64,200
		Site 3: Biofiltration Strip	I-605 NB, south of SR 91 WB Connector	84,000	118,200
		Site 4: Biofiltration Swale	Cerritos Maintenance Station	64,000	30,700
		Site 5: Biofiltration Swale	I-605 NB/SR 91 WB Connector	64,000	46,400
		Site 6: Biofiltration Swale	I-5 SB/I-605 SB Onramp	64,000	131,000
		Site 7: Biofiltration Swale	I-605 SB between Carson St. and Del Amo Blvd.	64,000	120,500
		Site 8: Catchbasin Inserts	Foothill Maintenance Station	13,000	15,200
		Site 9: Catchbasin Inserts	Las Flores Maintenance Station	13,000	64,300
		Site 10: Catchbasin Inserts	Rosemead Maintenance Station	13,000	33,200
			PROJECT 3 SUBTOTALS	**495,000**	**861,100**
4	B&C	**Media Filters,Oil/Water Separator, MCTTs**			
		Site 1: Media Filter	Eastern Regional Maintenance Station	133,000	194,500
		Site 2: Media Filter	Foothill Maintenance Station	133,000	602,500
		Site 3: Media Filter	Termination Park & Ride (I-105/I-605 Interchange)	133,000	392,400
		Site 4: Media Filter	Paxton Park & Ride (I-210/SR118)	133,000	154,800
		Site 5: Oil/Water Separator	Alameda Maintenance Station	65,000	131,400
		Site 6: I MCTT (substitution for infiltration trench)	Lakewood Park & Ride (I-5 & Lakewood)	32,000	387,400
		Site7: I MCTT (substitution for infiltration trench)	Metro Maintenance Station	32,000	485,300
		Site 8: I MCTT (substitution for infiltration trench)	Via Verde Park & Ride (I-210 & Via Verde)	32,000	263,200
		Oil/Water Separator	unsited	65,000	0
		Oil/Water Separator	unsited	65,000	0
		Oil/Water Separator	unsited	65,000	0
			PROJECT 4 SUBTOTALS	**693,000**	**2,611,500**
			TOTAL District 7 Sites	**2,542,000**	**4,761,800**
			TOTAL District 7 Sites (no concrete lining)		**4,738,700**
SD	RBF	Detention Basin (substitution for infiltration basin)	I-15/SR78 Interchange	242,000	498,000
	AEI	Biofiltration Swale	I-5 SB at Palomar Airport Road	64,000	156,000
	AEI	Infiltration Trench	Carlsbad Maintenance Station	32,000	
	AEI	Biofiltration Strip	Carlsbad Maintenance Station	84,000	143,500
	AEI	Biofiltration Swale	SR 78 EB at Melrose Place	64,000	143,500
	RBF	Infiltration Basin	I-5 SB at La Costa Blvd.	242,000	373,500
	AEI	Media Sand Filter	Escondido Maintenance Station	133,000	327,500
	AEI	Media Sand Filter	I-5 SB/SR 78 Park & Ride	133,000	286,200
	AEI	Compost Filter (substitution for infiltration trench)	Kearny Mesa Maintenance Station	32,000	247,400
			San Diego Sites	**1,026,000**	**2,175,600**
			San Diego Sites (no concrete lining)		**1,990,600**
			TOTAL STIPULATION	**3,568,000**	**6,937,400**
			TOTAL STIPULATION (no concrete lining)		**6,729,300**

11 million

34123/meetings/status 1/ *

PS&E PROJECTS	DISTRICT 7 PROJECT 1 (MW) PS&E	DISTRICT 7 PROJECT 2 (B&C) PS&E	DISTRICT 11 PACKAGE 1 (RBF) PS&E
REVISED PS&E TO DISTRICT OFFICE ENGINEER, NRDC, and EPA (District 11)	4/15/98	4/8/98	4/7/98
NRDC and EPA (District 11) COMMENTS TO CALTRANS	4/22/98	4/15/98	4/14/98
DISTRICT OFFICE ENGINEER COMMENTS TO CONSULTANTS	4/29/98	4/22/98	4/21/98
FINAL PS&E TO DISTRICT OFFICE ENGINEER	~~5/6/98~~ 5/7	~~4/29/98~~ 5/6	4/28/98
PS&E	5/13/98	~~5/6/98~~ 5/13/98	5/5/98
READY TO LIST (RTL)	5/18/98	5/~~11~~18/98 5/18	5/11/98
Supplemental Report - Complete Design Assumptions Submitted to NRDC, EPA (District 11)	6/1/98	6/1/98	6/1/98
1st DECISION POINT (Post Design - Pre-Construction)	6/10/98	6/10/98	6/10/98
ADVERTISE (ADV)	6/29/98	6/22/98	6/22/98
BID OPENING (BO)	7/23/98	7/16/98	7/16/98
AWARD (AW)	8/13/98	8/6/98	8/6/98
EXECUTION (EX)	8/20/98	8/13/98	8/13/98
BEGIN CONSTRUCTION (BC)	8/25/98	8/18/98	8/18/98
Site Visits/Review of Construction Projects	11/11/98	11/11/98	11/11/98
2nd DECISION POINT (Pre-Monitoring)	11/18/98	11/18/98	11/18/98
START STORMWATER MONITORING	12/1/98	12/1/98	12/1/98

PROCUREMENT PROJECTS	DISTRICT 7 PROJECT 3 (MW) Procurement	DISTRICT 7 PROJECT 4 (B&C) Procurement	DISTRICT 11 PACKAGE 2 (AEI-CASC) Procurement
REVISED SUBMITTAL TO DISTRICT, NRDC, and EPA (District 11)	4/29/98	4/22/98	4/7/98
NRDC and EPA (District 11) COMMENTS TO CALTRANS	5/23/98 5/22	5/22 ~~5/18/98~~	5/1/98
PACKAGE TO ENCROACHMENT PERMITS	5/30/98	5/30 ~~5/23/98~~	5/8/98 ← 5/11
PERMITS ISSUED →	6/8/98	6/8 ~~5/30/98~~	5/15/98 ←
Supplemental Report - Complete Design Assumptions Submitted to NRDC, EPA (District 11)	6/20/98	6/30/98	6/10/98
1st DECISION POINT (Post Design - Pre-Construction)	6/30/98	7/10/98	6/20/98 ←
BEGIN CONSTRUCTION (BC)	8/1/98	8/15/98	8/1/98
Site Visits - Construction/Project Review	11/11/98	11/11/98	11/11/98
2nd DECISION POINT (Pre-Monitoring)	11/18/98	11/18/98	11/18/98
START STORMWATER MONITORING	12/1/98	12/1/98	12/1/98