INDEX OF SHEETS

DIST	COUNTY	ROUTE	KILOMETER POST TOTAL PROJECT	SHEET No	TOTAL SHEETS
7	LA	VAR	VAR	1	52

STATE OF CALIFORNIA

DEPARTMENT OF TRANSPORTATION

PROJECT PLANS FOR CONSTRUCTION ADJACENT TO STATE HIGHWAY

IN LOS ANGELES COUNTY AT VARIOUS LOCATIONS

To be supplemented by Standard Plans dated July, 1997

The State of California or its officers or agents shall not be responsible for the accuracy or completeness of electronic copies of this plan sheet.

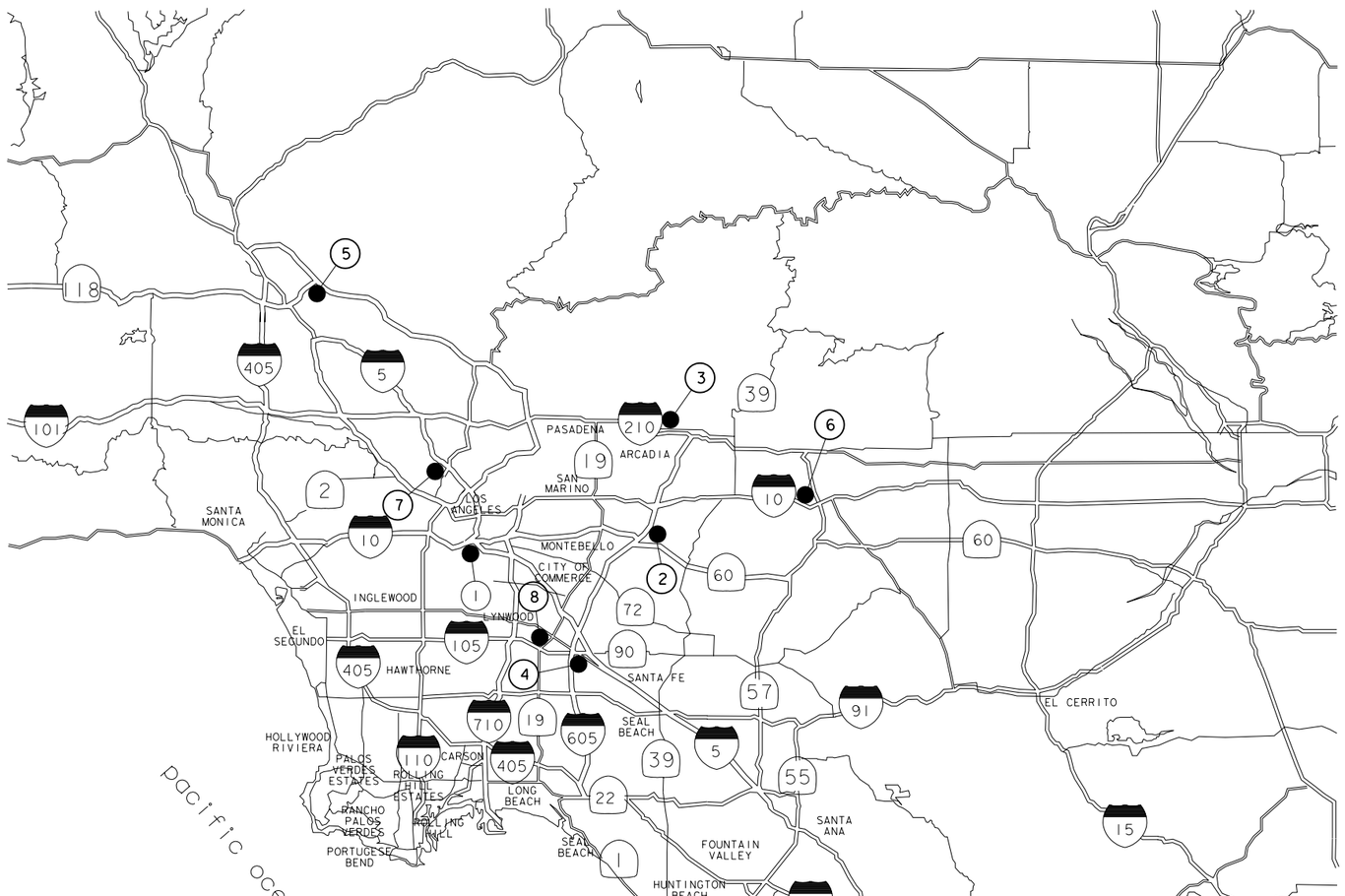

LOCATION OF CONSTRUCTION

LOC	ROUTE	DESCRIPTION
1	10	ALAMEDA MAINTENANCE STATION
2	60	EASTERN REGIONAL MAINTENANCE YARD
3	210	FOOTHILL MAINTENANCE STATION
4	105	TERMINATION PARK AND RIDE
6	210	VIA VERDE PARK AND RIDE
8	105	LAKEWOOD PARK AND RIDE

The Contractor shall possess the Class (or Classes) of license as specified in the ''Notice to Contractors''.

AS BUILT

By

SEPT 6, 2000

DATE

Project Engineer Date
Registered Civil Engineer

REGISTERED PROFESSIONAL ENGINEER
DOUGLAS B. ROBISON
No. 37109
Exp. 06-30-00
CIVIL
STATE OF CALIFORNIA

Plans Approval Date

BROWN AND CALDWELL
16735 VON KARMAN
IRVINE, CA 92606

Contract No.

$DATE$ PROJECT ENGINEER | $TIME$ DATE | $FILE$ PROJECT MANAGER | DATE

LAST REVISION 00-00-00 | DATE PLOTTED => $DATE | TIME PLOTTED => $TIME

DIST.	COUNTY	ROUTE	KILOMETER POST TOTAL PROJECT	SHEET NO.	TOTAL SHEETS
7	LA	5,605,91	VAR	2	52

Caltrans Metric

The State of California or its officers or agents shall not be responsible for the accuracy or completeness of electronic copies of this plan sheet.

To accompany plans dated _____

GENERAL ROAD WORK

MISCELLANEOUS

- ■ A10A Abbreviations
- ■ A10B Symbols
- ☐ A20A Pavement Markers and Traffic Lines, Typical Details
- ☐ A20B Pavement Markers and Traffic Lines, Typical Details
- ☐ A20C Pavement Markers and Traffic Lines, Typical Details
- ☐ A20D Pavement Markers and Traffic Lines, Typical Details
- ☐ A24A Pavement Markings- Arrows
- ☐ A24B Pavement Markings- Arrows
- ☐ A24C Pavement Markings- Symbols and Numerals
- ☐ A24D Pavement Markings- Words
- ☐ A24E Pavement Markings- Words and Crosswalks
- ☐ A35A Portland Cement Concrete Paving Details
- ☐ A40 Rumble Strip Details
- ☐ A62A Excavation and Backfill- Miscellaneous Details
- ☐ A62B Limits of Payment for Excavation and Backfill Bridge- Surcharge and Wall
- ☐ A62C Limits of Payment for Excavation and Backfill- Bridge
- ☐ A62D Excavation and Backfill- Concrete Pipe Culverts
- ☐ A62E Excavation and Backfill- Cast-in-Place Reinforced Concrete Box and Arch Culverts
- ☐ A62F Excavation and Backfill- Metal and Plastic Culverts
- ☐ A73A Object Markers
- ☐ A73B Markers
- ■ A73C Delineators, Channelizers and Barricades
- ☐ A74 Survey Monuments
- ☐ A75A Concrete Barrier Type 50
- ☐ A75B Concrete Barrier Type 50F
- ☐ A75D Concrete Headlight Glare Screen
- ■ A77A Metal Beam Guard Railing
- ■ A77B Metal Beam Guard Railing- Standard Hardware
- ■ A77C Metal Beam Guard Railing- Posts and Blocks
- ☐ A77D Guard Rail Flares
- ■ A77E Guard Rail Flares
- ■ A77F Metal Beam Guard Railing- Miscellaneous Details
- ■ A77G Guard Rail End Anchors (Breakaway)
- ■ A77H Guard Rail End Anchors (Breakaway Hardware)
- ■ A77I Barrier and Guard Rail End Anchors
- ☐ A77J Guard Rail Connections to Bridge Rails, Retaining Walls and Abutments
- ■ A77K Guard Rail Connections to Bridge Sidewalks and Curbs
- ☐ A78A Thrie Beam Barrier
- ☐ A78B Thrie Beam Barrier- Standard Hardware and Miscellaneous Details
- ☐ A78C Thrie Beam Barrier- End Anchors
- ☐ A78D Thrie Beam Barrier Connection to Concrete Barrier Type 50
- ☐ A78E Thrie Beam Barrier Connections to Bridge Rails
- ☐ A78F Thrie Beam Barrier Connections to Bridge Curbs, Retaining Walls and Abutments
- ☐ A80 Thrie Beam Barrier Emergency Passageway
- ■ A81 Crash Cushion, Sand Filled
- ☐ A83 Portable Scale Pad and Approach Slab Details
- ■ A85 Chain Link Fence
- ☐ A86 Barbed Wire and Wire Mesh Fences
- ☐ A87 Curbs, Dikes and Driveways

CRIB WALLS

- ☐ C7A Reinforced Concrete Crib Wall- Battered Wall- Types A,B and C
- ☐ C7B Reinforced Concrete Crib Wall- Battered Wall- Types D,E and F
- ☐ C7C Reinforced Concrete Crib Wall- Vertical Wall- Types A,B and C
- ☐ C7D Reinforced Concrete Crib Wall- Vertical Wall- Types D,E and F
- ☐ C7E Reinforced Concrete Crib Wall- Types A,B,C,D,E and F-Header and Stretcher Details
- ☐ C7F Design Data for Reinforced Concrete Crib Wall Foundation Pressure-Battered Wall
- ☐ C7G Reinforced Concrete Crib Wall Foundation Pressure- Vertical Wall
- ☐ C8A Steel Crib Wall- Construction Details
- ☐ C8B Steel Crib Wall- Design Data
- ☐ C8C Steel Crib Wall- Design Data
- ☐ C9A Timber Crib Wall- Types A,B,C and D
- ☐ C9B Timber Crib Wall- Types A,B,C and D-Design Data

DRAINAGE

- ☐ D72 Drainage Inlets
- ☐ D73 Drainage Inlets
- ☐ D74A Drainage Inlets
- ☐ D74B Drainage Inlets
- ☐ D74C Drainage Inlets Details
- ■ D75 Pipe Inlet
- ■ D77A Grate Details
- ■ D77B Bicycle Proof Grate Details
- ☐ D77C Alternative Hinged Cover for Type OL and OS Inlets and Trash Rack for Type OCP Inlet
- ☐ D78 Gutter Depressions
- ☐ D79 Precast Reinforced Concrete Pipe- Direct Design Method
- ☐ D80 Cast-in-Place Reinforced Concrete Single Box Culvert
- ☐ D81 Cast-in-Place Reinforced Concrete Double Box Culvert
- ☐ D82 Cast-in-Place Reinforced Concrete Box Culvert Miscellaneous Details
- ☐ D84 Box Culvert Wingwalls- Types A,B and C
- ☐ D85 Box Culvert Wingwalls- Types D and E
- ☐ D86A Box Culvert Warped Wingwalls
- ■ D86B Pipe Culvert Headwalls, Endwalls and Warped Wingwalls
- ☐ D86C Arch Culvert Headwalls, Endwalls and Warped Wingwalls
- ☐ D87A Overside Drains
- ☐ D87B Overside Drains
- ☐ D87C Underdrains
- ☐ D88 Construction Loads on Culverts
- ☐ D88A Strut Details for Structural Steel Plate Pipes, Arches, and Vehicular Undercrossings
- ■ D89 Pipe Headwalls
- ■ D90 Pipe Culvert Headwalls, Endwalls and Wingwalls- Types A,B and C
- ☐ D93A Pipe Riser Connections
- ■ D93B Drainage Inlet Riser Connections
- ■ D93C Pipe Riser with Debris Rack Cage
- ☐ D94A Metal and Plastic Flared End Sections
- ☐ D94B Concrete Flared End Sections
- ☐ D95 Concrete Arch Culverts
- ■ D97A Corrugated Metal Pipe Coupling Details No. 1- Annular Coupling Band Bar and Strap and Angle Connectors
- ■ D97B Corrugated Metal Pipe Coupling Details No. 2- Hat Band Coupler and Flange Details
- ■ D97C Corrugated Metal Pipe Coupling Details No. 3- Helical and Universal Couplers
- ■ D97D Corrugated Metal Pipe Coupling Details No. 4- Hugger Coupling Bands
- ■ D97E Corrugated Metal Pipe Coupling Details No. 5- Standard Joint
- ■ D97F Corrugated Metal Pipe Coupling Details No. 6- Positive Joint
- ■ D97G Corrugated Metal Pipe Coupling Details No. 7- Positive Joints and Downdrains
- ■ D97H Reinforced Concrete Pipe or Non-Reinforced Concrete Pipe Standard and Positive Joints
- ☐ D98A Slotted Corrugated Steel Pipe Drain Details
- ☐ D98B Slotted Corrugated Steel Pipe Drain Details
- ☐ D99A Structural Section Drainage System Details
- ☐ D99B Edge Drain Outlet and Vent Details
- ☐ D99C Edge Drain Cleanout and Vent Details
- ☐ D99D Cross Drain Interceptor Details

HIGHWAY PLANTING

- ☐ H1 Planting and Irrigation- Abbreviations
- ☐ H2 Planting and Irrigation- Symbols
- ☐ H3 Planting and Irrigation- Details
- ☐ H4 Planting and Irrigation- Details
- ☐ H5 Planting and Irrigation- Details
- ☐ H6 Planting and Irrigation- Details
- ☐ H7 Planting and Irrigation- Details
- ☐ H8 Planting and Irrigation- Details

TEMPORARY FACILITIES

- ■ T1 Temporary Crash Cushion, Sand Filled
- ■ T2 Temporary Crash Cushion, Sand Filled
- ■ T3 Temporary Railing (Type K)
- ☐ T4 Temporary Traffic Screen
- ☐ T7 Construction Project Funding Identification Signs
- ☐ T10 Traffic Control System for Lane Closure on Freeways and Expressways
- ☐ T10A Traffic Control System for Lane and Complete Closures on Freeways and Expressways
- ☐ T11 Traffic Control System for Lane Closure on Multilane Conventional Highways
- ☐ T12 Traffic Control System for Lane Closure on Multilane Conventional Highways
- ☐ T13 Traffic Control System for Lane Closure on Two Lane Conventional Highways
- ☐ T14 Traffic Control System for Ramp Closures
- ☐ T15 Traffic Control System for Moving Lane Closure on Multilane Highways
- ☐ T16 Traffic Control System for Moving Lane Closure on Multilane Highways
- ☐ T17 Traffic Control System for Moving Lane Closure on Two Lane Highways

BRIDGE

- ☐ B0-1 Bridge Details
- ☐ B0-3 Bridge Details
- ☐ B0-5 Bridge Details
- ☐ B0-13 Bridge Details
- ☐ B2-3 400 mm Cast-in-Drilled-Hole Concrete Pile
- ☐ B2-5 Pile Details- Class 400 and Class 625
- ☐ B2-6 Pile Details- Class 400C and Class 625C
- ☐ B2-8 Pile Details- Class 900 and Class 900C
- ☐ B2-9 Load Test Pile Details (1)
- ☐ B2-10 Load Test Pile Details (2)
- ☐ B2-11 Load Test Pile Details (3)
- ☐ B3-1 Retaining Wall Type 1- H=1200 Through 9100 mm
- ☐ B3-2 Retaining Wall Type 1- H=9700 Through 10 900 mm
- ☐ B3-3 Retaining Wall- Type 1A
- ☐ B3-4 Retaining Wall- Type 2
- ☐ B3-5 Counterfort Retaining Wall- Type 3
- ☐ B3-6 Counterfort Retaining Wall- Type 4
- ☐ B3-7 Retaining Wall- Type 5
- ☐ B3-8 Retaining Wall Details No. 1
- ☐ B3-9 Retaining Wall Details No. 2
- ☐ B3-11 Retaining Wall Type 6- 1829 mm Maximum
- ☐ B6-1 T-Beam Details
- ☐ B6-10 Utility Openings, T-Beam
- ☐ B6-21 Joint Seals (Maximum Movement Rating = 50 mm)
- ☐ B7-1 Box Girder Details
- ☐ B7-5 Deck Drains
- ☐ B7-6 Deck Drains- Type D-1 and D-2
- ☐ B7-10 Utility Opening- Box Girder
- ☐ B7-11 Utility Details
- ☐ B8-5 Cast-in-Place Prestressed Girder Details
- ☐ B11-7 Chain Link Railing
- ☐ B11-47 Cable Railing
- ☐ B11-51 Tubular Hand Railing
- ☐ B11-52 Chain Link Railing Type 7
- ☐ B11-53 Concrete Barrier Type 25
- ☐ B11-54 Concrete Barrier Type 26
- ☐ B13-1 Slope Protection Detail No. 1
- ☐ B13-2 Slope Protection Detail No. 2
- ☐ B14-1 Structural Steel Plate Vehicular Undercrossing
- ☐ B14-3 Communication and Sprinkler Control Conduit (Conduit less than 103 mm Diameter)
- ☐ B14-4 Water Supply Line (Bridge) (Pipe less than NPS 4)
- ☐ B14-5 Water Supply Line (Details) (Pipe less than NPS 4)

AS BUILT

By _____

MAY 26, 2000

DATE

SHEET 1 OF 2

STANDARD PLANS LIST

(July,1995 Edition)

July 3,1995

The Standard Plan sheets applicable to this contract include, but are not limited to those indicated by a marked box.

USERNAME => $$$$$$USER$$$$$
DGN FILE => $$$$$$$$$$DGNSPEC$$$$$$$$$$

CONTRACT NO.

$DATE$ $TIME$ $FILE$

TIME PLOTTED => $$$$$$$$TIME$$$$$$$

ROADSIDE SIGNS

- ☐ RS1 Roadside Signs, Typical Installation Details No. 1
- ■ RS2 Roadside Signs, Wood Post, Typical Installation Details No. 2
- ■ RS3 Roadside Signs, Laminated Wood Box Post, Typical Installation Details No. 3
- ☐ RS4 Roadside Signs, Typical Installation Details No. 4

OVERHEAD SIGNS

OVERHEAD SIGNS-TRUSS

- ☐ S1 Overhead Signs- Truss, Instructions and Examples
- ☐ S2 Overhead Signs- Truss, Single Post Type, Post Types II thru VII
- ☐ S3 Overhead Signs- Truss, Two Post Type, Post Types I-S thru VII-S
- ☐ S4 Overhead Signs- Truss, Single Post Type, Structural Frame Members
- ☐ S5 Overhead Signs- Truss, Two Post Type, Structural Frame Members
- ☐ S6 Overhead Signs- Truss, Structural Frame Details
- ☐ S7 Overhead Signs- Truss, Frame Juncture Details
- ☐ S8A Overhead Signs- Steel Frame Removable Sign Panel Frames
- ☐ S8B Overhead Signs- Removable Sign Panel Frames, Overhead Formed Panel Mounting Details
- ☐ S8C Overhead Signs- Truss, Sign Panel Mounting Details, Laminated Panel- Type A
- ☐ S8D Overhead Signs- Truss, Removable Sign Panel Frames 2.794 m and 3.048 m Sign Panels
- ☐ S9 Overhead Signs- Walkway Details No. 1
- ☐ S10 Overhead Signs- Walkway Details No. 2
- ☐ S11 Overhead Signs- Walkway Safety Railing Details
- ☐ S13 Overhead Signs- Truss Pile Foundation

OVERHEAD SIGNS-LIGHTWEIGHT

- ☐ S14A Overhead Signs- Lightweight Balanced-Single Steel Post Connection and Mounting Details
- ☐ S14B Overhead Signs- Lightweight Balanced-Single Steel Post Details
- ☐ S15 Overhead Signs- Lightweight, Type A, Connection Details
- ☐ S16 Overhead Signs- Lightweight, Type B, Connection Details
- ☐ S17 Overhead Signs- Lightweight, Type C, Connection Details
- ☐ S18A Overhead Signs- Lightweight, Sign Panel Mounting Details, Laminated Panel- Type A
- ☐ S18B Overhead Signs- Lightweight, Light Fixture Mounting Details
- ☐ S20A Overhead Signs- Lightweight Post Details
- ☐ S20B Overhead Signs- Lightweight Foundation

OVERHEAD SIGNS-BOX BEAM CLOSED TRUSS ALTERNATIVE

- ☐ S39 Overhead Signs- Box Beam, Closed Truss Foundation
- ☐ S40A Overhead Signs- Box Beam, Closed Truss, Two Post Type Frame Members
- ☐ S40B Overhead Signs- Box Beam, Closed Truss, Single and Two Post Type General Frame Details
- ☐ S40C Overhead Signs- Box Beam, Closed Truss, Ribbed Sheet Metal Details
- ☐ S40D Overhead Signs- Box Beam, Closed Truss, Two Post Type Frame Details
- ☐ S40E Overhead Signs- Box Beam, Closed Truss, Two Post Type Frame Juncture Details
- ☐ S40F Overhead Signs- Box Beam, Closed Truss, Two Post Type Post Details
- ☐ S40G Overhead Signs- Box Beam, Closed Truss, Single Post Type Frame Members
- ☐ S40H Overhead Signs- Box Beam, Closed Truss, Single Post Cantilever Frame Details
- ☐ S40I Overhead Signs- Box Beam, Closed Truss, Single Post Cantilever Frame Juncture Details
- ☐ S40J Overhead Signs- Box Beam, Closed Truss, Single Post Cantilever Post Details
- ☐ S40K Overhead Signs- Box Beam, Closed Truss, Single Post Butterfly Frame Details
- ☐ S40L Overhead Signs- Box Beam, Closed Truss, Single Post Butterfly Frame Juncture Details
- ☐ S40M Overhead Signs- Box Beam, Closed Truss, Single Post Butterfly Post Details

OVERHEAD SIGNS-TUBULAR

- ☐ S40N Overhead Signs- Tubular, Instructions and Examples
- ☐ S40P Overhead Signs- Tubular, Single Post Type Layout and Pipe Selection
- ☐ S40Q Overhead Signs- Tubular, Two Post Type Layout and Pipe Selection
- ☐ S40R Overhead Signs- Tubular, Structural Frame Details No. 1
- ☐ S40S Overhead Signs- Tubular, Structural Frame Details No. 2
- ☐ S40T Overhead Signs- Tubular Foundation Details

SIGNALS, LIGHTING AND ELECTRICAL SYSTEMS

- ☐ ES-1A Signal, Lighting and Electrical Systems- Symbols and Abbreviations
- ☐ ES-1B Signal, Lighting and Electrical Systems- Symbols and Abbreviations
- ☐ ES-2A Signal, Lighting and Electrical Systems- Service Equipment
- ☐ ES-2B Signal, Lighting and Electrical Systems- Service Equipment
- ☐ ES-2C Signal, Lighting and Electrical Systems- Service Equipment Notes
- ☐ ES-2D Signal, Lighting and Electrical Systems- Service Equipment and Typical Wiring Diagram, Type A
- ☐ ES-2E Signal, Lighting and Electrical Systems- Service Equipment and Typical Wiring Diagram, Type B
- ☐ ES-2F Signal, Lighting and Electrical Systems- Service Equipment and Typical Wiring Diagram, Type C
- ☐ ES-3A Signal, Lighting and Electrical Systems- Signal Heads and Mountings
- ☐ ES-3B Signal, Lighting and Electrical Systems- Signal Heads and Mountings
- ☐ ES-3C Signal, Lighting and Electrical Systems- Signal Heads and Mountings
- ☐ ES-3D Signal, Lighting and Electrical Systems- Signal Heads and Mountings
- ☐ ES-3E Signal, Lighting and Electrical Systems- Signal Heads and Mountings
- ☐ ES-4A Signal, Lighting and Electrical Systems- Controller Cabinet Details
- ☐ ES-4B Signal, Lighting and Electrical Systems- Controller Cabinet Details
- ☐ ES-4C Signal, Lighting and Electrical Systems- Controller Cabinet Details
- ☐ ES-4D Irrigation Controller Enclosure Cabinet
- ☐ ES-4E Signal, Lighting and Electrical Systems- Telephone Demarcation Cabinet Details
- ☐ ES-4F Signal, Lighting and Electrical Systems- Telephone Demarcation Cabinet Details
- ☐ ES-5A Signal, Lighting and Electrical Systems- Detectors
- ☐ ES-5B Signal, Lighting and Electrical Systems- Detectors
- ☐ ES-5C Signal, Lighting and Electrical Systems- Detectors
- ☐ ES-5D Signal, Lighting and Electrical Systems- Detectors
- ☐ ES-5E Signal, Lighting and Electrical Systems- Detectors
- ☐ ES-5F Signal, Lighting and Electrical Systems- Pedestrian Barricades
- ☐ ES-6A Signal and Lighting Standards- Type 1 Standards and Equipment Numbering
- ☐ ES-6AA Signal Standards- Push Button Posts
- ☐ ES-6B Lighting Standards- Types 15, 21 and 22
- ☐ ES-6C Lighting Standards- 24.4 m to 48.8 m High Mast Light Pole, Foundation Details
- ☐ ES-6D Lighting Standards- Types 30 and 31
- ☐ ES-6DA Lighting Standards- Type 32
- ☐ ES-6E Lighting Standards- Types 30 and 31, Slip Base Details
- ☐ ES-6F Lighting Standards- 10 Degree Type
- ☐ ES-6H Lighting Standards- 10 Degree Type, Details
- ☐ ES-6J Signal and Lighting Standards- Case 1 Arm Loading, Wind Velocity = 113 km/h, Arm Lengths 4.5 m to 9.1 m
- ☐ ES-6K Signal and Lighting Standards- Case 2 Arm Loading, Wind Velocity = 113 km/h, Arm Lengths 6.1 m to 9.1 m
- ☐ ES-6L Signal and Lighting Standards- Case 3 Arm Loading, Wind Velocity = 113 km/h, Arm Lengths 4.5 m to 13.7 m
- ☐ ES-6M Signal and Lighting Standards- Case 4 Arm Loading, Wind Velocity = 113 km/h, Arm Lengths 7.6 m to 13.7 m
- ☐ ES-6MA Signal and Lighting Standards- Case 5 Arm Loading, Wind Velocity = 113 km/h, Arm Lengths 15.2 m to 16.8 m
- ☐ ES-6N Signal and Lighting Standards- Type 40-0-129
- ☐ ES-6O Signal and Lighting Standards- Case 1 Arm Loading, Wind Velocity = 129 km/h, Arm Lengths 7.6 m to 9.1 m
- ☐ ES-6P Signal and Lighting Standards- Case 2 Arm Loading, Wind Velocity = 129 km/h, Arm Lengths 6.1 m to 9.1 m
- ☐ ES-6Q Signal and Lighting Standards- Case 3 Arm Loading, Wind Velocity = 129 km/h, Arm Lengths 6.1 m to 13.7 m
- ☐ ES-6R Signal and Lighting Standards- Case 4 Arm Loading, Wind Velocity = 129 km/h, Arm Lengths 7.6 m 13.7 m
- ☐ ES-6RA Signal and Lighting Standards- Case 5 Arm Loading, Wind Velocity = 129 km/h, Arm Lengths 15.2 m to 16.8 m

Caltrans Metric

DIST.	COUNTY	ROUTE	KILOMETER POST TOTAL PROJECT	SHEET NO.	TOTAL SHEETS
7	LA	5.605,91	VAR	3	52

The State of California or its officers or agents shall not be responsible for the accuracy or completeness of electronic copies of this plan sheet.

To accompany plans dated _____

- ☐ ES-6S Signal and Lighting Standards- Details No. 1
- ☐ ES-6T Signal and Lighting Standards- Details No. 2
- ☐ ES-6TA Signal and Lighting Standards- Pole and Mast Arm Alternatives
- ☐ ES-6U Lighting Standards- Types 10 and 15 Slip Base Insert
- ☐ ES-6V Signal and Sign Standards- Type 33 Left Turn
- ☐ ES-7A Signal, Lighting and Electrical Systems- Electrical Details, Structure Installations
- ☐ ES-7B Signal, Lighting and Electrical Systems- Electrical Details, Structure Installations
- ☐ ES-7C Signal, Lighting and Electrical Systems- Electrical Details, Structure Installations
- ☐ ES-7D Signal, Lighting and Electrical Systems- Electrical Details, Structure Installations
- ☐ ES-7E Signal, Lighting and Electrical Systems- Electrical Details, Structure Installations
- ☐ ES-7F Signal, Lighting and Electrical Systems- Flush Soffit Luminaire Modification Details, Structure Installation
- ☐ ES-8 Signal, Lighting and Electrical Systems- Pull Box Details
- ☐ ES-9A Signal, Lighting and Electrical Systems- Cantilever Flashing Beacon, Types 9, 9A and 9B
- ☐ ES-9B Signal, Lighting and Electrical Systems- Cantilever Flashing Beacon, Types 9, 9A and 9B
- ☐ ES-10 Signal, Lighting and Electrical Systems- Isolux Diagrams
- ☐ ES-11 Signal, Lighting and Electrical Systems- Foundation Installations
- ☐ ES-12 Signal, Lighting and Electrical Systems- Pedestrian Undercrossing Fluorescent Lighting Fixture
- ☐ ES-13 Signal, Lighting and Electrical Systems- Splicing Details
- ☐ ES-14 Signal, Lighting and Electrical Systems- Wiring Details and Fuse Ratings
- ☐ ES-15 Signal, Lighting and Electrical Systems- Pedestrian Overcrossing Fluorescent Lighting Fixture
- ☐ ES-27A Signal, Lighting and Electrical Systems- Extinguishable Message Sign, 250 mm Letters
- ☐ ES-27B Signal, Lighting and Electrical Systems- Extinguishable Message Sign, 250 mm Letters
- ☐ ES-28 Signal, Lighting and Electrical Systems- Extinguishable Message Sign and Flashing Beacons

SIGN ILLUMINATION

- ☐ ES-29 Sign Illumination- Mercury Sign Illumination Equipment
- ☐ ES-30 Sign Illumination- 915 mm Fluorescent Sign Illumination Equipment
- ☐ ES-32A Sign Illumination- Sign Illumination Equipment
- ☐ ES-32B Sign Illumination- Sign Illumination Control
- ☐ ES-33 Sign Illumination- Internally Illuminated Street Name Sign

AS BUILT

By _____

MAY 26, 2000
DATE

SHEET 2 OF 2

STANDARD PLANS LIST

(July, 1995 Edition)
July 3, 1995

The Standard Plan sheets applicable to this contract include, but are not limited to those indicated by a marked box.

USERNAME => $$$$$$USER$$$$$$
DGN FILE => $$$$$$$$$$DGNSPEC$$$$$$$$$$

CONTRACT NO.

$DATE$ $TIME$ $FILE$

TIME PLOTTED => $$$$$$$$TIME$$$$$$

DIST	COUNTY	ROUTE	KILOMETER POST TOTAL PROJECT	SHEET NO.	TOTAL SHEETS
07	LA	VAR	VAR	6	52

REGISTERED CIVIL ENGINEER

PLANS APPROVAL DATE

REGISTERED PROFESSIONAL ENGINEER
DOUGLAS B. ROBISON
No. 37109
Exp. 06-30-00
CIVIL
STATE OF CALIFORNIA

BROWN AND CALDWELL
16735 VON KARMAN
IRVINE, CA 92606

The State of California or its officers or agents shall not be responsible for the accuracy or completeness of electronic copies of this plan sheet.

ALL DIMENSIONS ARE IN METERS UNLESS OTHERWISE SHOWN

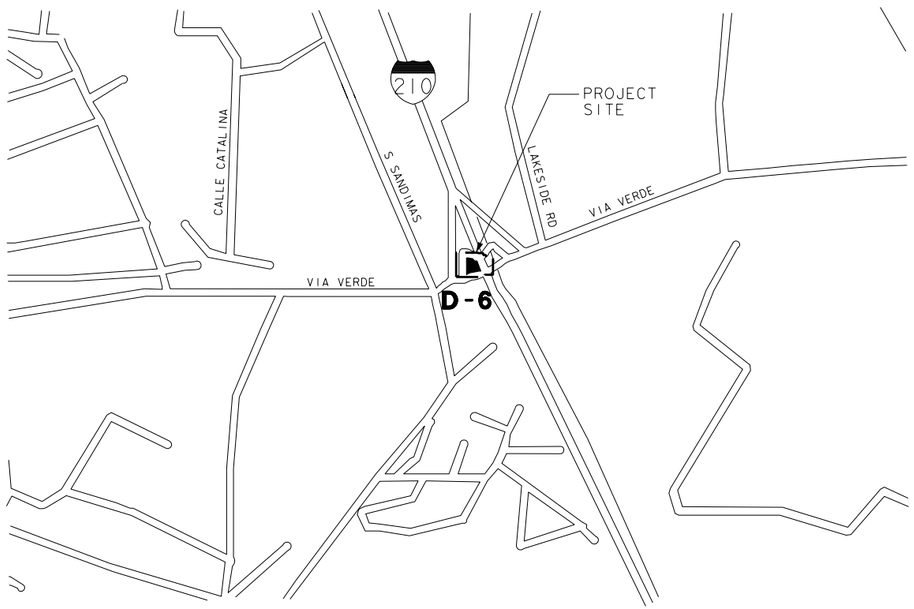

SITE 6

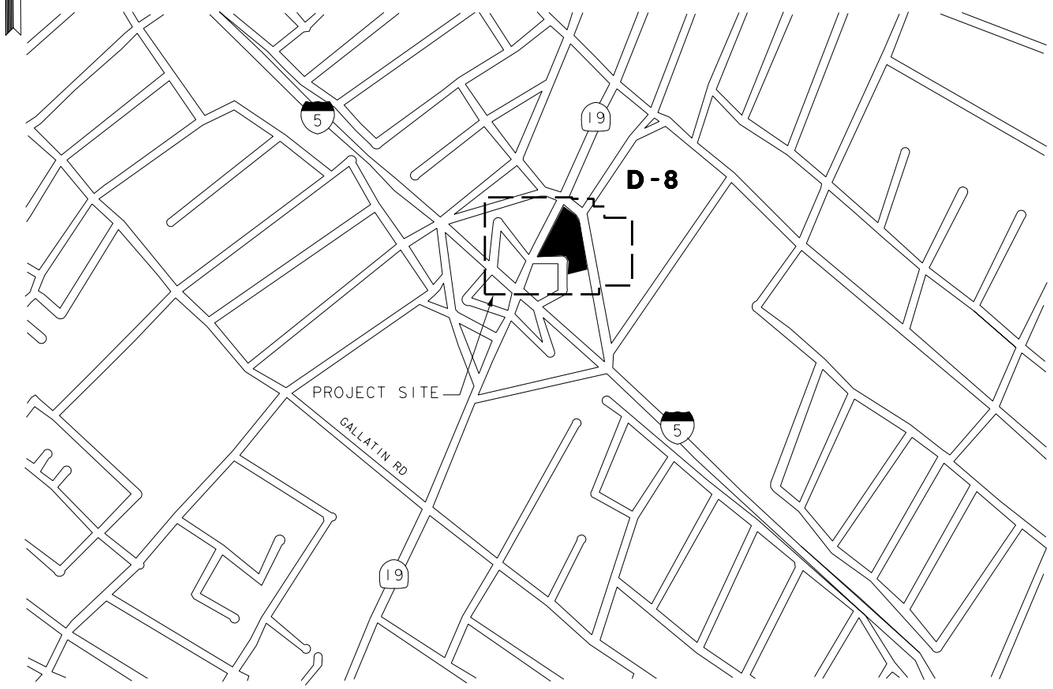

SITE 8

AS BUILT

By

MAY 26, 2000

DATE

KEY MAPS

K-3

CALCULATED/ DESIGNED	BY	DATE	REVISED BY
CHECKED	BY		DATE REVISED

DESIGN OVERSIGHT

$FILE$

$TIME$

$DATE$

FOR REDUCED PLANS
ORIGINAL SCALE IN MILLIMETERS 0 20 40 60 80

USERNAME => $$$$$$USER$$$$$$
DGN FILE => $$$$$$$$$$DGNSPEC$$$$$$$$$$

CU 00000

EA 000000

DIST	COUNTY	ROUTE	KILOMETER POST TOTAL PROJECT	SHEET NO.	TOTAL SHEETS
07	LA	VAR	VAR	15	52

REGISTERED CIVIL ENGINEER

PLANS APPROVAL DATE

X

REGISTERED PROFESSIONAL ENGINEER
DOUGLAS B. ROBISON
No. 37109
Exp. 06-30-00
CIVIL
STATE OF CALIFORNIA

BROWN AND CALDWELL
16735 VON KARMAN
IRVINE, CA 92606

The State of California or its officers or agents shall not be responsible for the accuracy or completeness of electronic copies of this plan sheet.

BASIS OF BEARING AND COORDINATES

BEARINGS AND COORDINATES AS SHOWN HEREON ARE IN TERMS OF THE CALIFORNIA COORDINATE SYSTEM OF 1983 (EPOCH 1995.50), ZONE 5; BASED LOCALLY UPON THE FOLLOWING CONTINUOUSLY OPERATING REFERENCE STATIONS AS PUBLISHED BY THE NATIONAL GEODEDIC SURVEY:

STATION	NORTHING (Y)	EASTING (X)
AOA1	573,242.692	1,923,437.480
CITI	570,633.993	1,988,261.458
CLAR	567,694.931	2,026,867.926
LBCH	531,939.993	1,981,168.043
LEEP	570,440.253	1,970,323.973
LONG	567,874.717	1,999,686.948
OAT2	592,220.446	1,944,662.114

BENCHMARK

ELEVATIONS AS SHOWN HEREON ARE IN TERMS OF THE NORTH AMERICAN VERTICAL DATUM OF 1988 BASED LOCALLY UPON THE FOLLOWING NATIONAL GEODEDIC SURVEY CONTROL POINTS

STATION NAME	ELEVATION NAVD88
700 9	379.476
MF 365	128.077
OAKS	243.481
TIDAL 8	4.131
UF 629	310.305
Y 609	269.558

NOTES:

1. ALL PROPERTY WITHIN CALTRANS R/W. R/W LINE LOCATED OUTSIDE OF SITE BOUNDARY.
2. FOR COMPLETE R/W, ACCESS, AND PROPERTY LINE DATA, SEE R/W RECORD MAPS AT THE CALTRANS DISTRICT OFFICE.

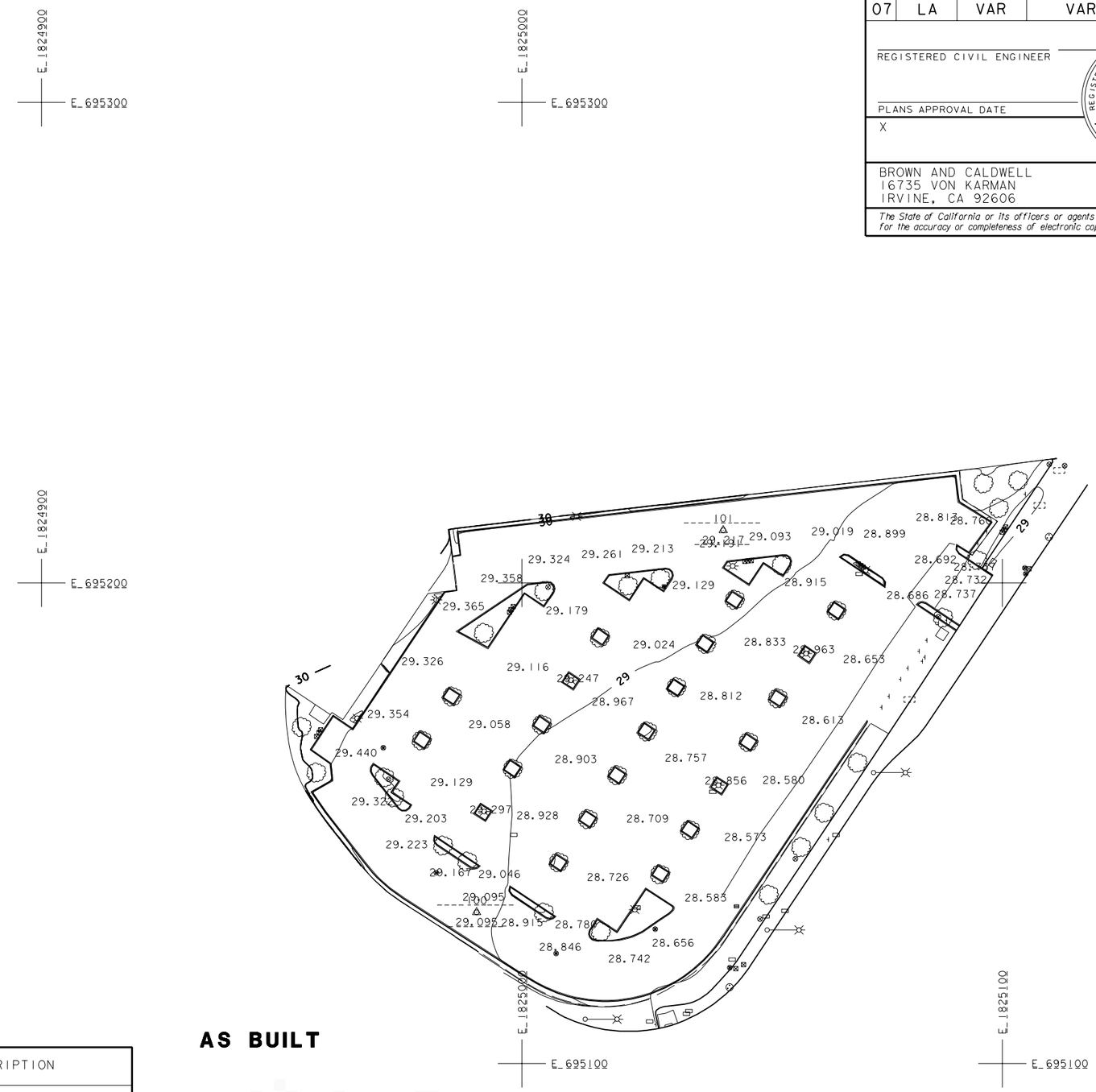

PROJECT CONTROL

STA NAME	SITE NAME	NORTHING (Y) METERS	EASTING (X) METERS	EPOCH DATE	ELEVATION METERS	DESCRIPTION
100	SITE 8	695131.459	1,824,990.565	1995.50	29.091	CONCRETE NAIL IN A/C
101	SITE 8	695210.960	1,825,041.899	1995.50	29.212	CONCRETE NAIL IN A/C

AS BUILT

By

MAY 26, 2000

DATE

ALL DIMENSIONS ARE IN METERS UNLESS OTHERWISE SHOWN

CONSTRUCTION STAKING AND SURVEY, SITE 8 (I-105 LAKEWOOD BLVD)

SCALE 1: 500

CSS-8

DATE	REVISED BY	DATE REVISED

CALCULATED/DESIGNED BY

CHECKED BY

PROJECT ENGINEER

STATE OF CALIFORNIA - DEPARTMENT OF TRANSPORTATION

$DATE$ $TIME$ $FILE$

FOR REDUCED PLANS ORIGINAL SCALE IN MILLIMETERS 0 20 40 60 80

USERNAME => $$$$$$USER$$$$$$
DGN FILE => $$$$$$$$$$DGNSPEC$$$$$$$$$$

CU 00000

EA 000000

ALL DIMENSIONS ARE IN
METERS UNLESS OTHERWISE SHOWN

DIST	COUNTY	ROUTE	KILOMETER POST TOTAL PROJECT	SHEET NO.	TOTAL SHEETS
07	LA	VAR	VAR	31	52

REGISTERED CIVIL ENGINEER

PLANS APPROVAL DATE

X

REGISTERED PROFESSIONAL ENGINEER
DOUGLAS B. ROBISON
No. 37109
Exp. 06-30-00
CIVIL
STATE OF CALIFORNIA

BROWN AND CALDWELL
16735 VON KARMAN
IRVINE, CA 92606

The State of California or its officers or agents shall not be responsible for the accuracy or completeness of electronic copies of this plan sheet.

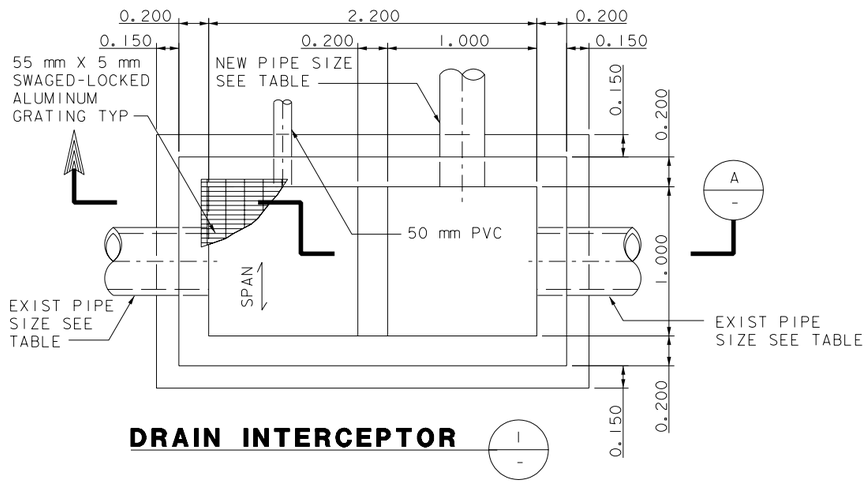

DRAIN INTERCEPTOR (1)

DRAINAGE SYSTEM NO 3 (a) 4 (b) 6 (a) 8 (a)

SCALE: 1:20

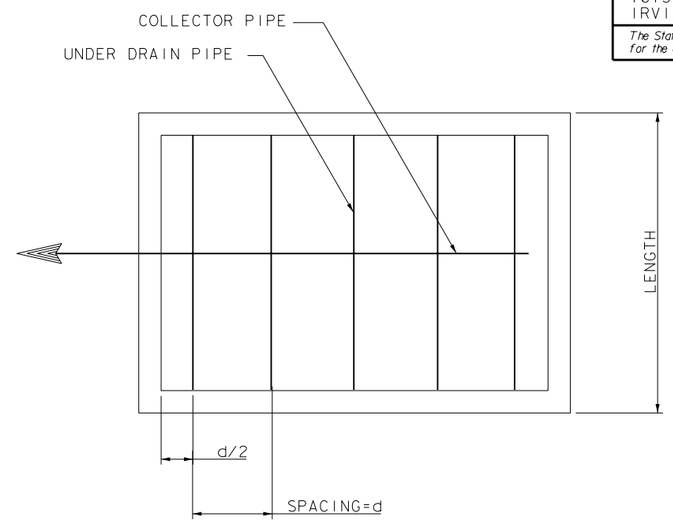

FILTER UNDERDRAIN PLAN

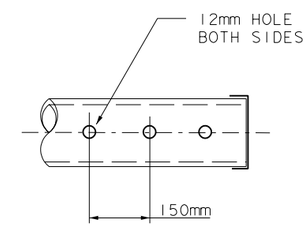

DETAIL

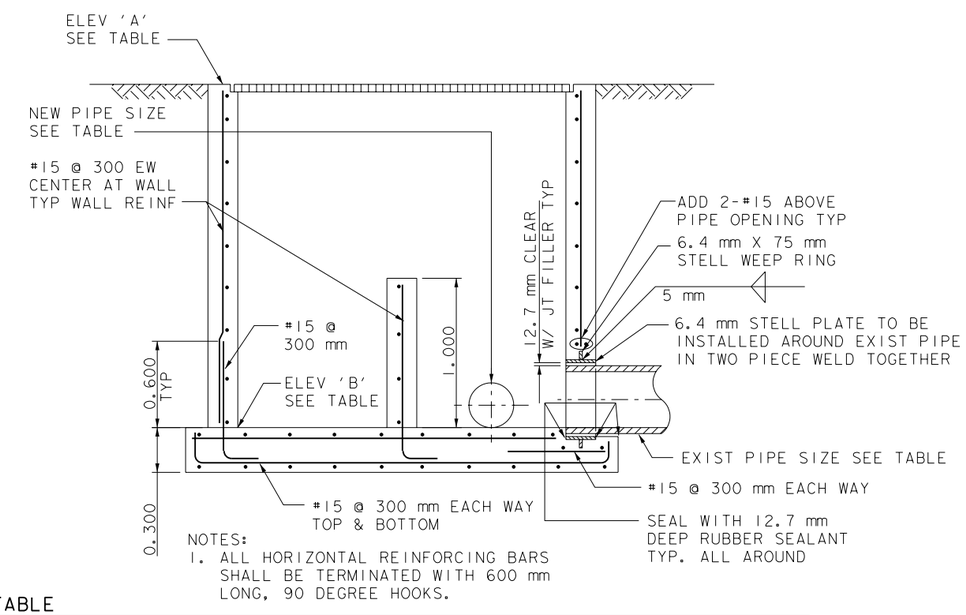

NOTES:
1. ALL HORIZONTAL REINFORCING BARS SHALL BE TERMINATED WITH 600 mm LONG, 90 DEGREE HOOKS.

TABLE

SITE NAME	EXIST PIPE SIZE	NEW PIPE SIZE	ELEVATION 'A'	ELEVATION 'B'
SITE 3 (FOOTHILL MAINTENANCE)	375 mm	400 mm	155.90	154.49
SITE 4 (TERMINATION PARK AND RIDE)	750 mm	300 mm	28.33	25.22
SITE 6 (VIA VERDE PARK AND RIDE)	450 mm	300 mm	331.88	330.18
SITE 8 (I-105/ LAKEWOOD BLVD)	450 mm	300 mm	28.83	26.85

SECTION (A)
SCALE: 1:20

	NUMBER OF UNDER DRAIN PIPE	LENGTH OF UNDER DRAIN PIPES METERS	UNDER DRAIN PIPE SPACING, d, METERS
EAST REGIONAL	3	4.5	2.0
FOOTHILL	4	5	2.0
TERMINATION	3	9.5	2.0
PAXTON	3	4.5	2.0
VIA VERDE	7	2.5	1.0
METRO	7	9.0	1.1

AS BUILT

By

MAY 26, 2000

DATE

DRAINAGE DETAILS

D-16

DESIGN OVERSIGHT

CALCULATED/ DESIGNED BY | CHECKED BY

DATE | REVISED BY | DATE REVISED

$DATE$ $TIME$ $FILE$

FOR REDUCED PLANS
ORIGINAL SCALE IN MILLIMETERS 0 20 40 60 80

USERNAME => $$$$$$USER$$$$$$
DGN FILE => 278D7

CU 00000

EA 000000

ALL DIMENSIONS ARE IN METERS UNLESS OTHERWISE SHOWN

DIST	COUNTY	ROUTE	KILOMETER POST TOTAL PROJECT	SHEET NO.	TOTAL SHEETS
07	LA	VAR	VAR	30	52

REGISTERED CIVIL ENGINEER

PLANS APPROVAL DATE

X

REGISTERED PROFESSIONAL ENGINEER DOUGLAS B. ROBISON No. 37109 Exp. 06-30-00 CIVIL STATE OF CALIFORNIA

BROWN AND CALDWELL
16735 VON KARMAN
IRVINE, CA 92606

The State of California or its officers or agents shall not be responsible for the accuracy or completeness of electronic copies of this plan sheet.

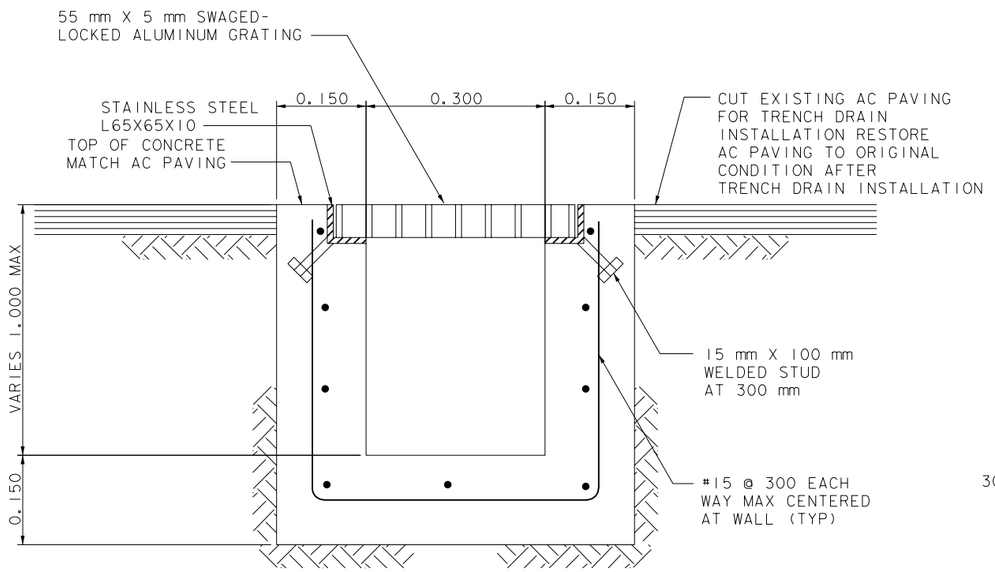

TRENCH DRAIN (1 / -)

DRAINAGE SYSTEM NO 1 a

SCALE: 1:5

5 a b

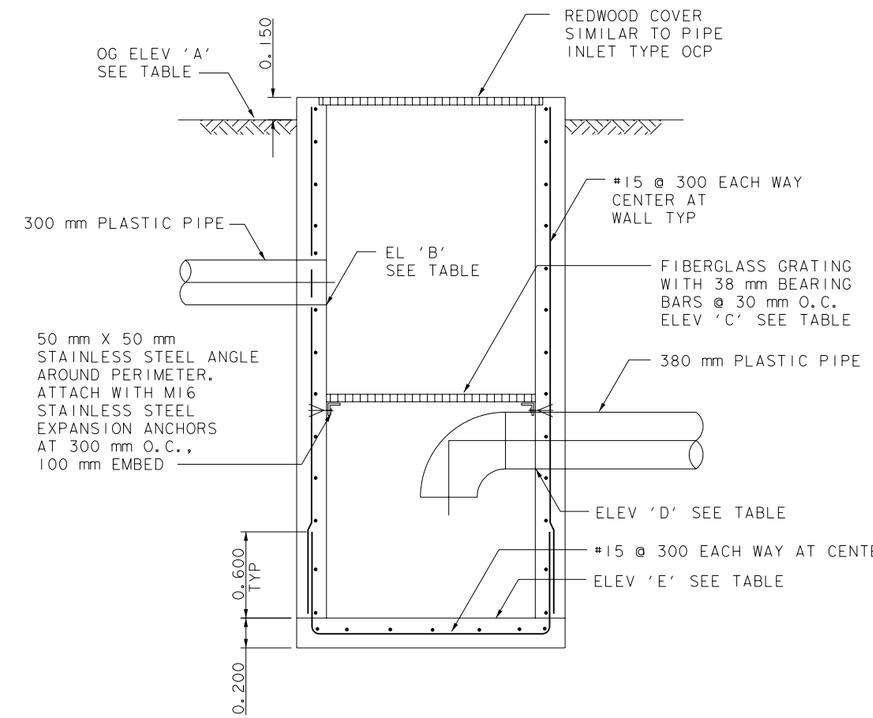

NOTES:
1. ALL HORIZONTAL REINFORCING BARS SHALL BE TERMINATED WITH 600 mm LONG, 90 DEGREE HOOKS.

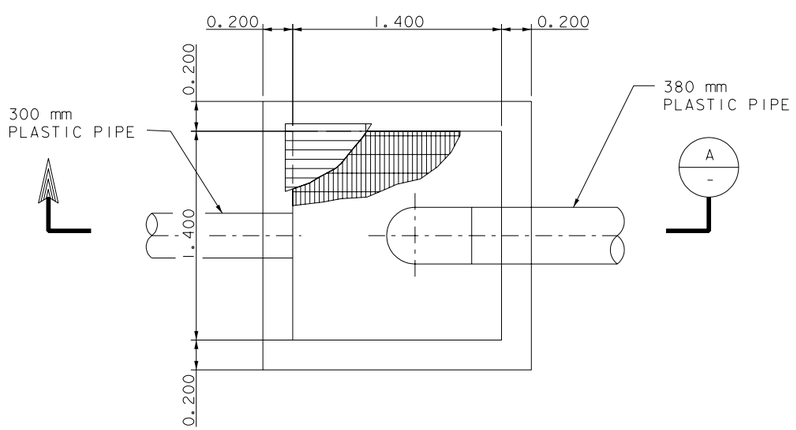

CATCH BASIN (2 / -)

DRAINAGE SYSTEM NO 6 e

SCALE: 1:20

7 e

8 e

ELEVATION TABLE

SITE NAME	ELEVATION 'A'	ELEVATION 'B'	ELEVATION 'C'	ELEVATION 'D'	ELEVATION 'E'
SITE 6 (VIA VERDA)	331.57	330.09	329.78	329.18	328.18
SITE 8 (I-105/ LAKEWOOD BLVD)	28.68	26.69	26.09	25.60	24.60

SECTION (A / -)

SCALE: 1:20

AS BUILT

By

MAY 26, 2000

DATE

DRAINAGE DETAILS

D-15

DESIGN OVERSIGHT

CALCULATED/ DESIGNED BY | CHECKED BY | DATE | REVISED BY | DATE REVISED

$DATE$ $TIME$ $FILE$

FOR REDUCED PLANS ORIGINAL SCALE IN MILLIMETERS 0 20 40 60 80

USERNAME => $$$$$$USER$$$$$$
DGN FILE => 278D7

CU 00000

EA 000000

ALL DIMENSIONS ARE IN
METERS UNLESS OTHERWISE SHOWN

DIST	COUNTY	ROUTE	KILOMETER POST TOTAL PROJECT	SHEET NO.	TOTAL SHEETS
07	LA	VAR	VAR	32	52

REGISTERED CIVIL ENGINEER

PLANS APPROVAL DATE

X

REGISTERED PROFESSIONAL ENGINEER
DOUGLAS B. ROBISON
No. 37109
Exp. 06-30-00
CIVIL
STATE OF CALIFORNIA

BROWN AND CALDWELL
16735 VON KARMAN
IRVINE, CA 92606

The State of California or its officers or agents shall not be responsible for the accuracy or completeness of electronic copies of this plan sheet.

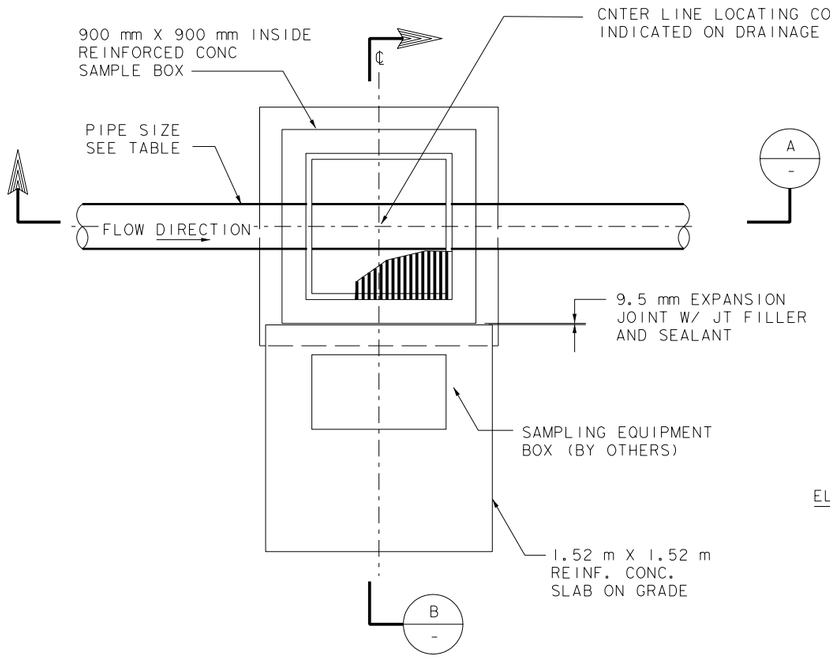

FLOW METERING AND SAMPLING BOX (1 / -)

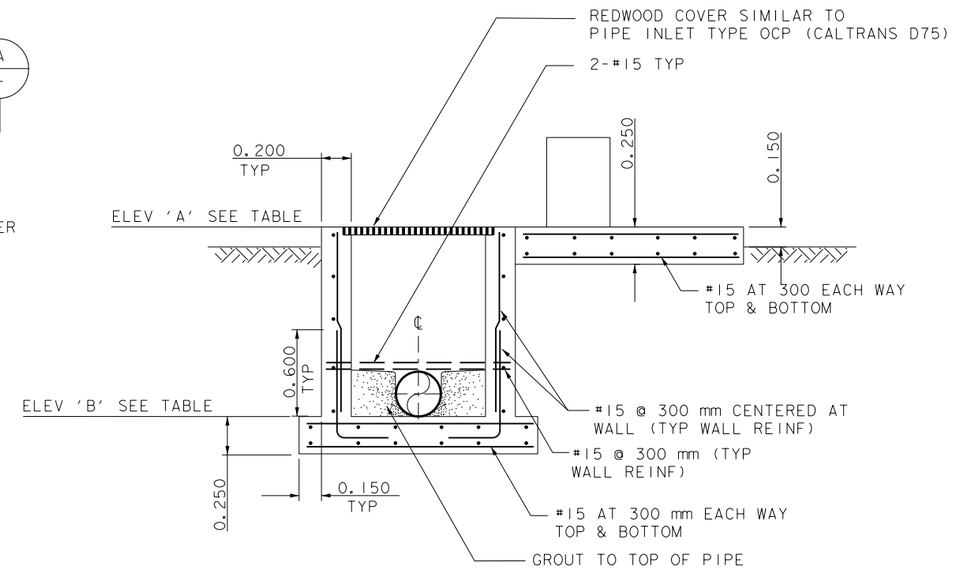

SECTION (B / -)
SCALE: 1:20

DRAINAGE SYSTEM NO (1) (b) (f)
SCALE: 1:20

(2) (c)
(3) (c)
(4) (c)
(6) (c)
(8) (c)

TABLE

SITE NAME	PIPE SIZE	ELEVATION 'A'	ELEVATION 'B'
SITE 1 (ALAMEDA MAINTENANCE STATION)	200 mm	70.88	70.27
SITE 2 (EASTERN REGIONAL MAINTENANCE STATION)	300 mm	86.59	85.39
SITE 3 (FOOTHILL MAINTENANCE)	400 mm	156.07	154.18
SITE 4 (TERMINATION PARK AND RIDE)	300 mm	28.42	26.11
SITE 6 (VIA VERDE PARK AND RIDE)	300 mm	331.63	330.13
SITE 8 (I-105/ LAKEWWOD BLVD)	300 mm	28.83	27.73

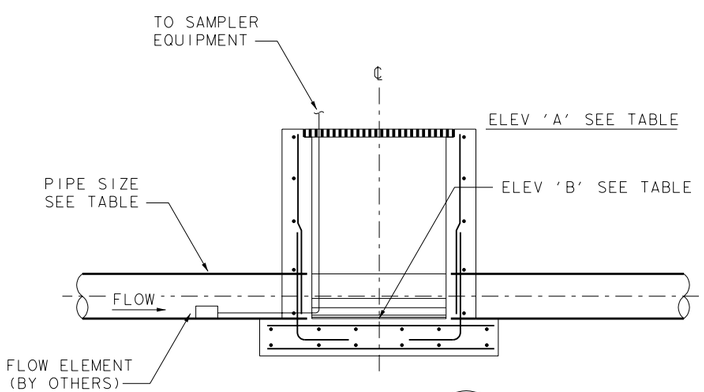

SECTION (A / -)
SCALE: 1:20

AS BUILT

By

MAY 26, 2000

DATE

DRAINAGE DETAILS

D-17

DATE	REVISED BY	DATE REVISED
CALCULATED/ DESIGNED BY	CHECKED BY	

DESIGN OVERSIGHT

$DATE$ $TIME$ $FILE$

FOR REDUCED PLANS
ORIGINAL SCALE IN MILLIMETERS 0 20 40 60 80

USERNAME => $$$$$$USER$$$$$$
DGN FILE => 278D7

CU 00000

EA 000000

DIST	COUNTY	ROUTE	KILOMETER POST TOTAL PROJECT	SHEET NO.	TOTAL SHEETS
07	LA	VAR	VAR	38	52

REGISTERED CIVIL ENGINEER

PLANS APPROVAL DATE

X

REGISTERED PROFESSIONAL ENGINEER
DOUGLAS B. ROBISON
No. ROBISON
Exp. 06-30-00
CIVIL
STATE OF CALIFORNIA

BROWN AND CALDWELL
16735 VON KARMAN
IRVINE, CA 92606

The State of California or its officers or agents shall not be responsible for the accuracy or completeness of electronic copies of this plan sheet.

ALL DIMENSIONS ARE IN METERS UNLESS OTHERWISE SHOWN

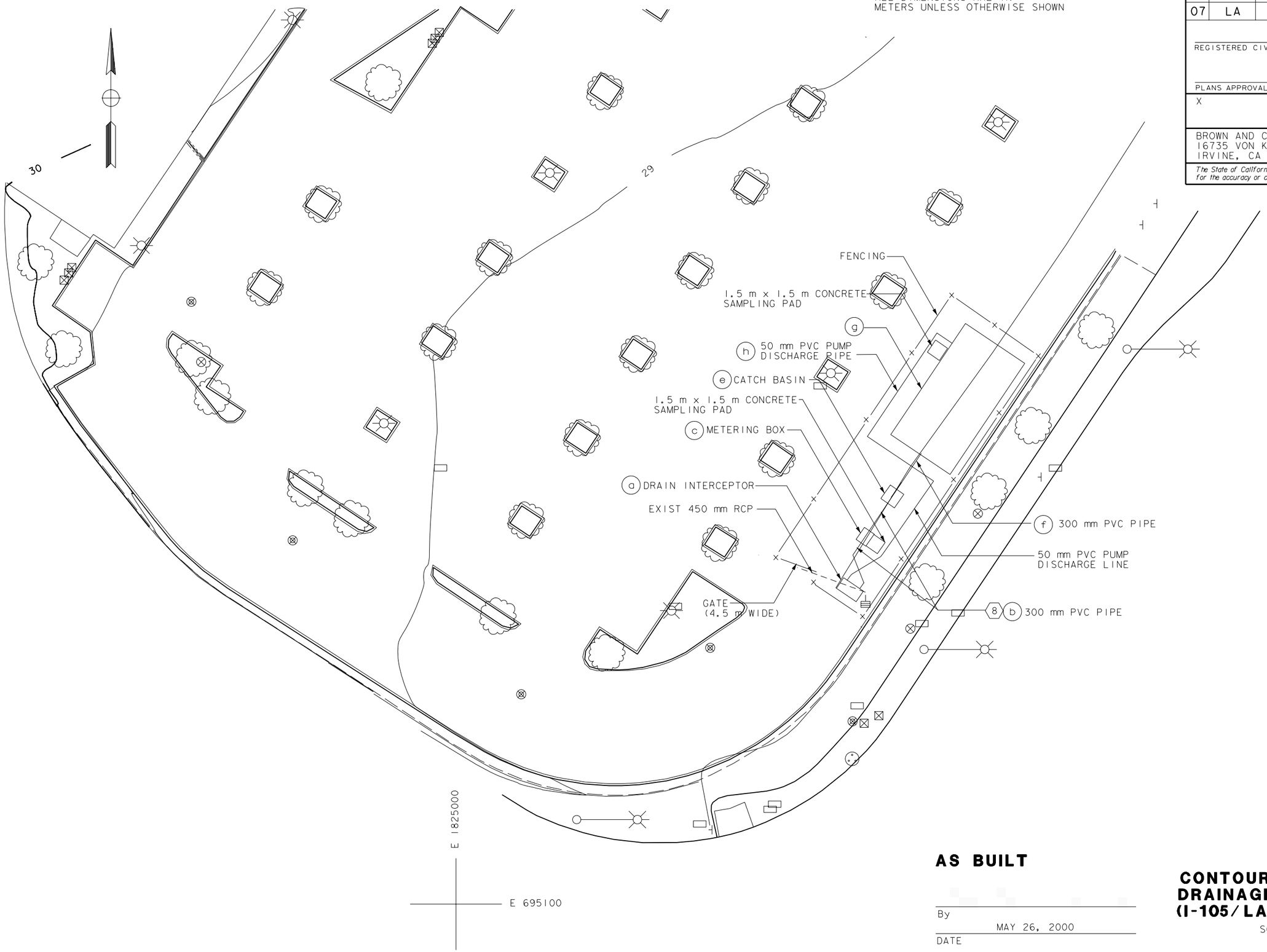

AS BUILT

By

MAY 26, 2000

DATE

CONTOUR GRADING AND DRAINAGE PLAN, SITE 8 (I-105/LAKEWOOD BLVD)

SCALE 1:200

D-23

DATE	REVISED BY	CALCULATED/ DESIGNED BY
	DATE REVISED	CHECKED BY

DESIGN OVERSIGHT

$DATE$ $TIME$ $FILE$

FOR REDUCED PLANS ORIGINAL SCALE IN MILLIMETERS 0 20 40 60 80

USERNAME => $$$$$$USER$$$$$$
DGN FILE => $$$$$$$$$$DGNSPEC$$$$$$$$$$

CU 00000

EA 000000

DIST	COUNTY	ROUTE	KILOMETER POST TOTAL PROJECT	SHEET NO.	TOTAL SHEETS
07	LA	VAR	VAR	39	52

REGISTERED CIVIL ENGINEER

PLANS APPROVAL DATE

X

REGISTERED PROFESSIONAL ENGINEER
DOUGLAS B. ROBISON
No. 37109
Exp. 06-30-00
CIVIL
STATE OF CALIFORNIA

BROWN AND CALDWELL
16735 VON KARMAN
IRVINE, CA 92606

The State of California or its officers or agents shall not be responsible for the accuracy or completeness of electronic copies of this plan sheet.

ALL DIMENSIONS ARE IN METERS UNLESS OTHERWISE SHOWN

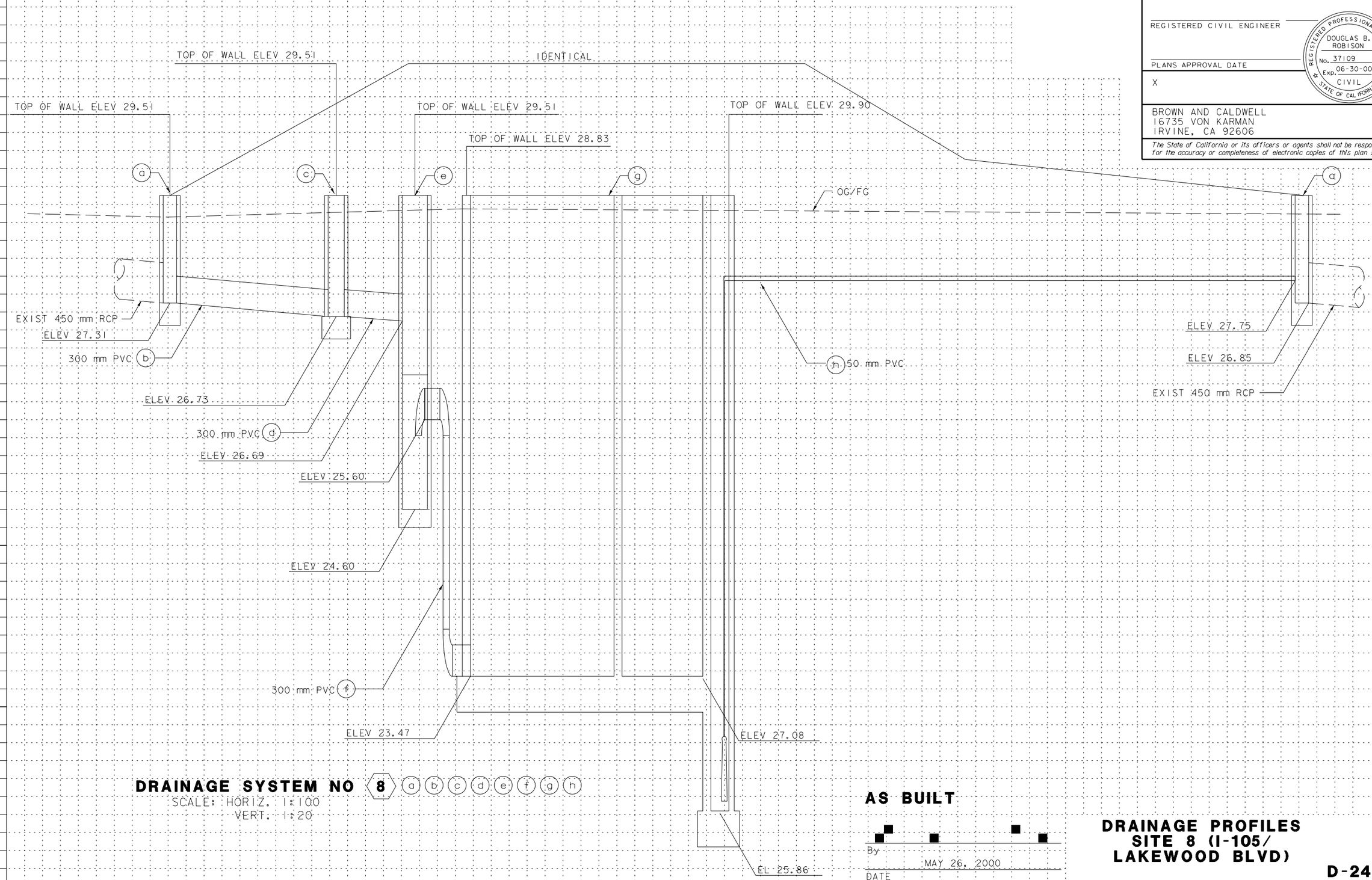

DRAINAGE SYSTEM NO 8 a b c d e f g h

SCALE: HORIZ. 1:100
VERT. 1:20

AS BUILT

By

MAY 26, 2000

DATE

DRAINAGE PROFILES SITE 8 (I-105/ LAKEWOOD BLVD)

D-24

Station	
m³	Exc
	Emb

DESIGN OVERSIGHT

CALCULATED/ DESIGNED BY | CHECKED BY | DATE | REVISED BY | DATE REVISED

$DATE$ $TIME$ $FILE$

FOR REDUCED PLANS ORIGINAL SCALE IN MILLIMETERS 0 20 40 60 80

USERNAME => $$$$$$USER$$$$$$
DGN FILE => $$$$$$$$$$DGNSPEC$$$$$$$$$$

CU 00000

EA 000000

ALL DIMENSIONS ARE IN METERS UNLESS OTHERWISE SHOWN

DIST	COUNTY	ROUTE	KILOMETER POST TOTAL PROJECT	SHEET NO.	TOTAL SHEETS
07	LA	VAR	VAR	40	52

REGISTERED CIVIL ENGINEER

PLANS APPROVAL DATE

X

REGISTERED PROFESSIONAL ENGINEER DOUGLAS B. ROBISON No. 37109 Exp. 06-30-00 CIVIL STATE OF CALIFORNIA

BROWN AND CALDWELL
16735 VON KARMAN
IRVINE, CA 92606

The State of California or its officers or agents shall not be responsible for the accuracy or completeness of electronic copies of this plan sheet.

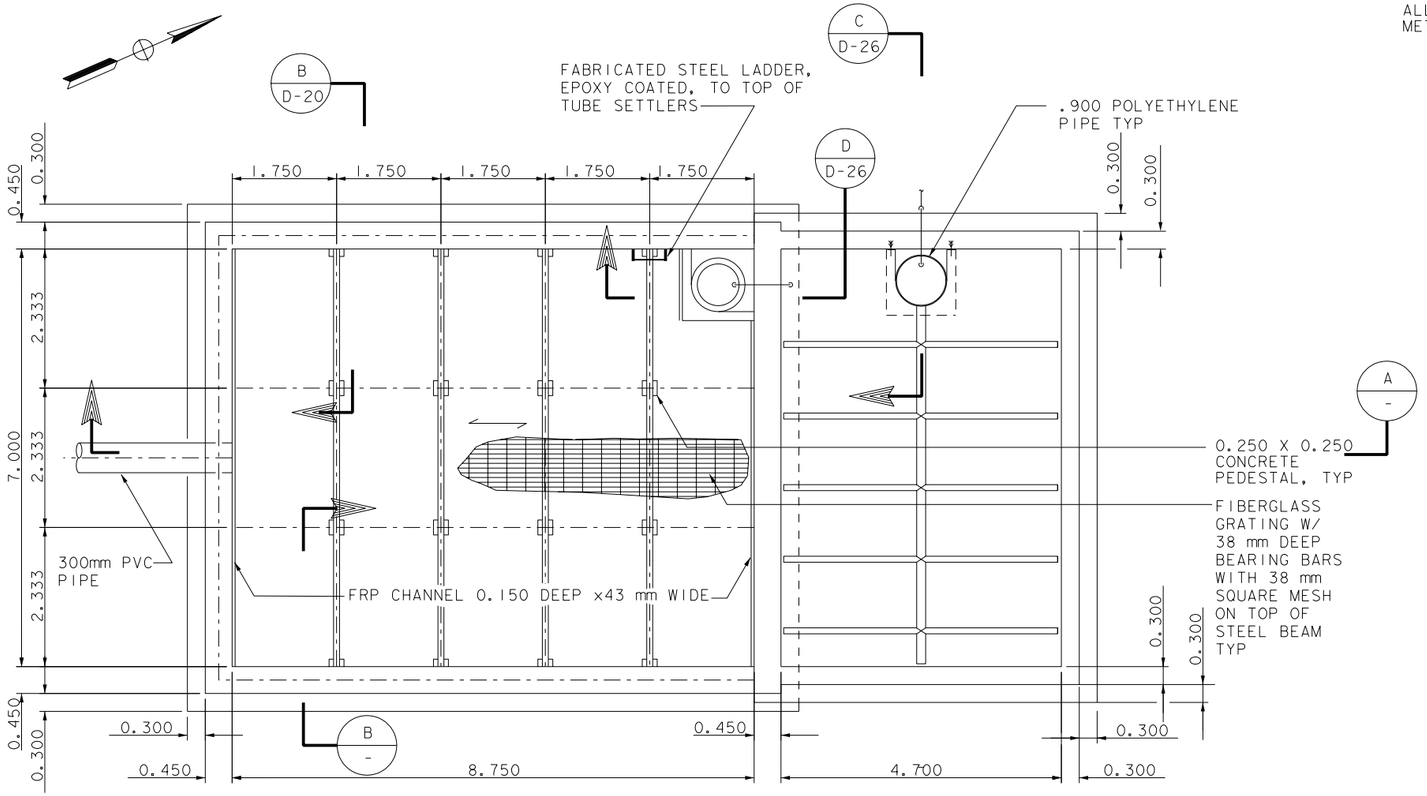

TREATMENT CHAMBER AND PUMPING STATION (1/-)

DRAINAGE SYSTEM NO 8 (g)

SCALE: 1:50

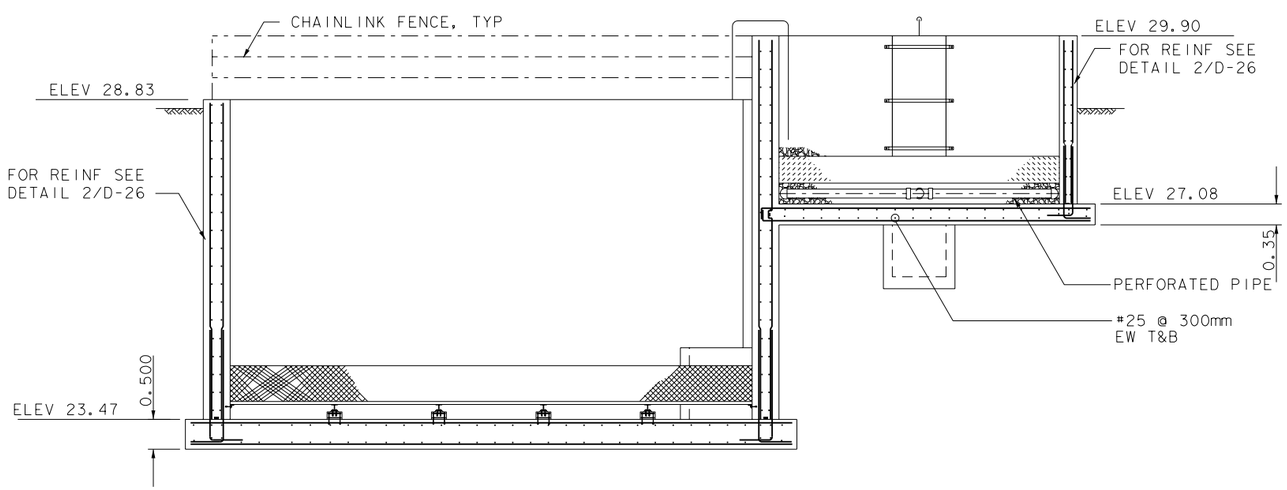

SECTION (A/-)

SCALE: 1:50

AS BUILT

By

MAY 26, 2000

DATE

DRAINAGE DETAILS

D-25

DATE	REVISED BY	DATE REVISED

CALCULATED/DESIGNED BY

CHECKED BY

DESIGN OVERSIGHT

$DATE$ $TIME$ $FILE$

FOR REDUCED PLANS ORIGINAL SCALE IN MILLIMETERS 0 20 40 60 80

USERNAME => $$$$$$USER$$$$$$
DGN FILE => 278D7

CU 00000

EA 000000

ALL DIMENSIONS ARE IN
METERS UNLESS OTHERWISE SHOWN

DIST	COUNTY	ROUTE	KILOMETER POST TOTAL PROJECT	SHEET NO.	TOTAL SHEETS
07	LA	VAR	VAR	41	52

REGISTERED CIVIL ENGINEER

PLANS APPROVAL DATE

X

REGISTERED PROFESSIONAL ENGINEER
DOUGLAS B. ROBISON
No. 37109
Exp. 06-30-00
CIVIL
STATE OF CALIFORNIA

BROWN AND CALDWELL
16735 VON KARMAN
IRVINE, CA 92606

The State of California or its officers or agents shall not be responsible for the accuracy or completeness of electronic copies of this plan sheet.

DATE	REVISED BY
	DATE REVISED

CALCULATED/DESIGNED BY

CHECKED BY

DESIGN OVERSIGHT

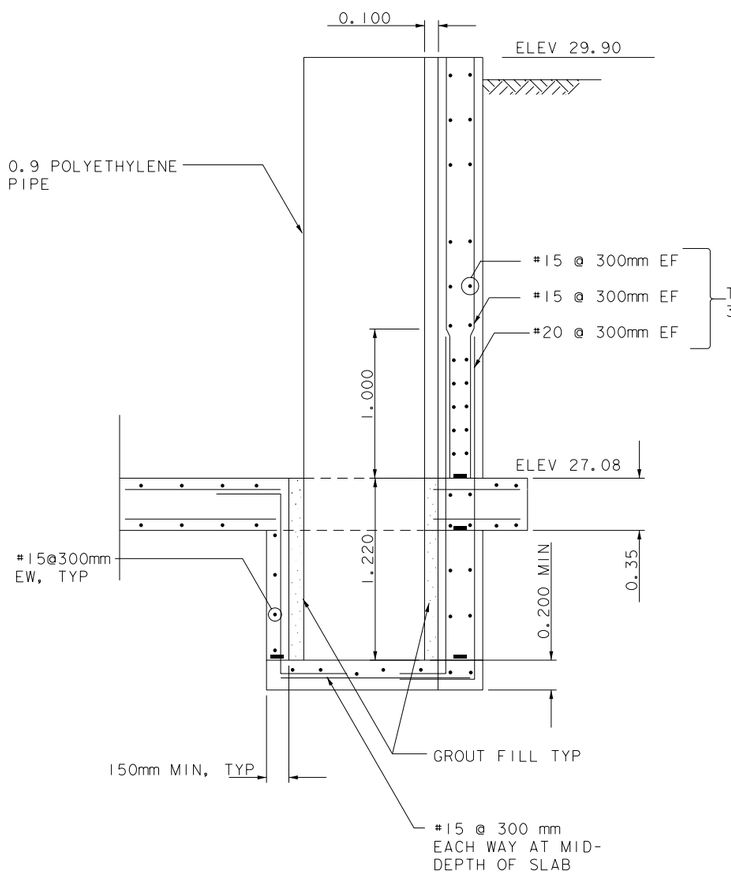

SECTION C / D-25
SCALE: 1:20

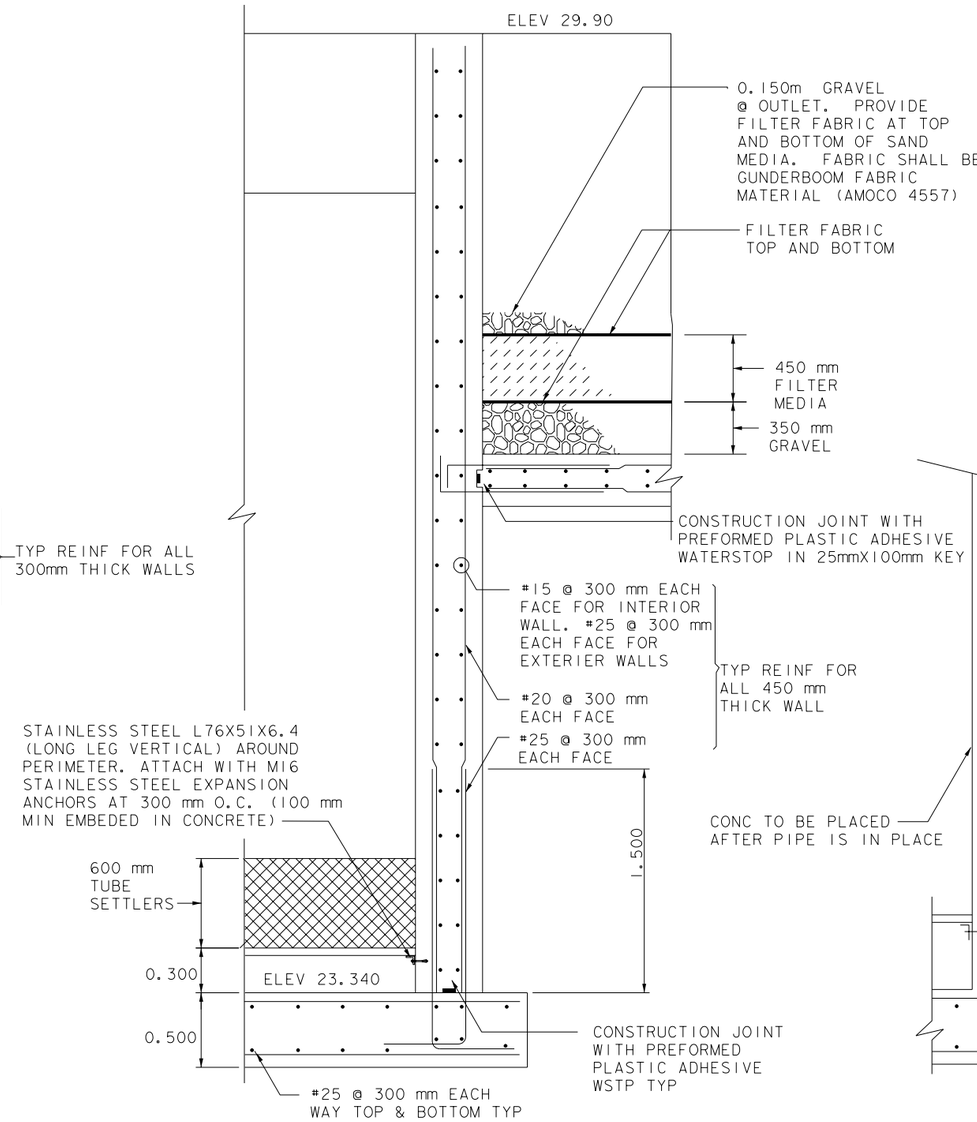

DETAIL 2 / D-25
SCALE: 1:20

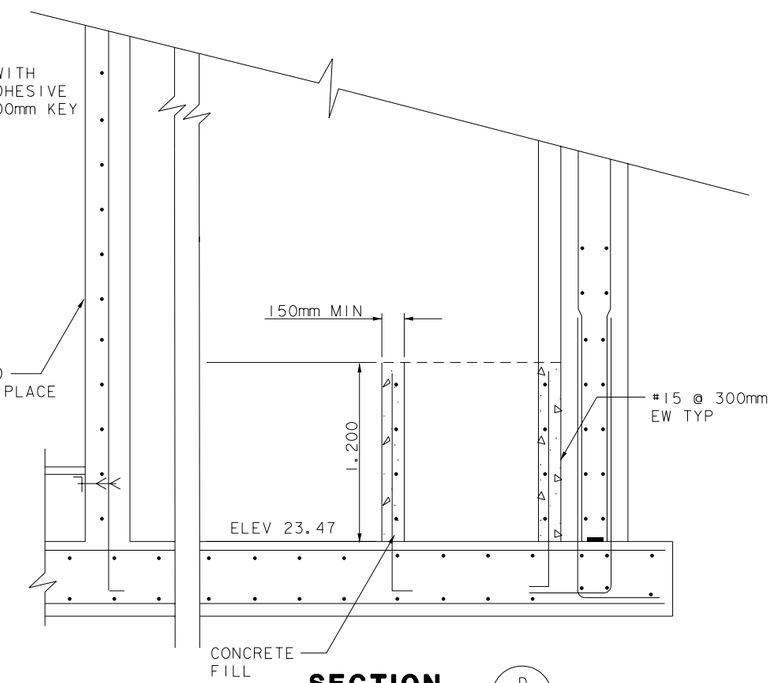

SECTION D / D-25
SCALE: 1:20

AS BUILT

By

MAY 26, 2000

DATE

DRAINAGE DETAILS

D-26

FOR REDUCED PLANS
ORIGINAL SCALE IN MILLIMETERS 0 20 40 60 80

USERNAME => $$$$$$USER$$$$$$
DGN FILE => 278D7

CU 00000

EA 000000

$DATE$ $TIME$ $FILE$

ALL DIMENSIONS ARE IN
METERS UNLESS OTHERWISE SHOWN

DIST	COUNTY	ROUTE	KILOMETER POST TOTAL PROJECT	SHEET NO.	TOTAL SHEETS
07	LA	VAR	VAR	42	52

REGISTERED CIVIL ENGINEER

PLANS APPROVAL DATE

X

REGISTERED PROFESSIONAL ENGINEER
DOUGLAS B. ROBISON
No. 37109
Exp. 06-30-00
CIVIL
STATE OF CALIFORNIA

BROWN AND CALDWELL
16735 VON KARMAN
IRVINE, CA 92606

The State of California or its officers or agents shall not be responsible for the accuracy or completeness of electronic copies of this plan sheet.

GENERAL

G1 SCOPE
THE GENERAL NOTES AND TYPICAL DETAILS ARE GENERAL AND APPLY TO THE ENTIRE PROJECT EXCEPT WHERE THERE ARE SPECIFIC INDICATIONS TO THE CONTRARY.

G2 APPLICABLE SPECIFICATIONS AND CODES
CONSTRUCTION SHALL BE IN ACCORDANCE WITH THE 1994 EDITION OF THE UNIFORM BUILDING CODE (UBC). THE ABOVE SHALL GOVERN EXCEPT WHERE OTHER APPLICABLE CODES OR THE FOLLOWING NOTES ARE MORE RESTRICTIVE.

G3 ALTERNATIVE DESIGNS
THE STRUCTURAL SYSTEMS AND DETAILS ON THESE PLANS ARE THE PRIORITY DESIGN. ALTERNATIVE SYSTEMS AND DETAILS MAY BE USED IF THE CONTRACTOR SUBMITS PLANS WITH SUBSTANTIATING CALCULATIONS AND TEST DATA, AND IF THE ALTERNATIVE PLANS ARE ACCEPTED BY THE DISTRICT.

G4 DIMENSIONS
STRUCTURAL DIMENSIONS CONTROLLED BY OR RELATED TO MECHANICAL OR ELECTRICAL EQUIPMENT SHALL BE VERIFIED BY THE CONTRACTOR PRIOR TO CONSTRUCTION.

G5 PROVISIONS FOR EQUIPMENT
MECHANICAL AND ELECTRICAL EQUIPMENT SUPPORTS, ANCHORAGES, OPENINGS, RECESSES AND REVEALS NOT SHOWN ON THE STRUCTURAL DRAWINGS BUT REQUIRED BY OTHER CONTRACT DRAWINGS SHALL BE PROVIDED PRIOR TO CASTING CONCRETE.

G6 CONSTRUCTION LOADS
STRUCTURES HAVE BEEN DESIGNED FOR OPERATIONAL LOADS ON COMPLETED STRUCTURES. STRUCTURES SHALL BE PROTECTED BY BRACING AND SHORING WHEREVER EXCESSIVE CONSTRUCTION LOADS MAY OCCUR DURING CONSTRUCTION.

G7 DRAINAGE SURFACES
SLOPE DRAINAGE SURFACES UNIFORMLY TO DRAIN. SLOPE SHALL BE 1/4" PER FOOT EXCEPT WHERE NOTED OTHERWISE ON THE PLANS.

CONCRETE

C1 APPLICABLE CODE
CONCRETE CONSTRUCTION SHALL CONFORM TO THE 1995 EDITION OF THE ACI BUILDING CODE (ACI-318).

C2 REINFORCING STEEL DETAILS
ALL DETAILING, FABRICATION AND ERECTION OF REINFORCING BARS, UNLESS OTHERWISE NOTED SHALL BE IN ACCORDANCE WITH MANUAL OF STANDARD PRACTICE FOR DETAILING REINFORCED CONCRETE STRUCTURES (ACI-315), LATEST EDITION.

C3 DESIGN STRESSES
A. CONCRETE f'c =28 MPa(ULTIMATE COMPRESSIVE STRESS AT 28 DAYS.

B. REINFORCING STEEL
(ASTM) A615M, GRADE 420, DEFORMED BARS

C4 CONCRETE COVER
CONCRETE COVER FOR REINFORCING BARS SHALL BE 50mm FOR FORMED SURFACES UNLESS SPECIFICALLY NOTED OTHERWISE. FOOTINGS AND FOUNDATION MATS CAST ON GROUND SHALLBE 75mm.

C5 EXTRA ACCESSORY BARS
IN ADDITION TO NORMAL ACCESSORIES USED TO HOLD REINFORCING STEEL FIRMLY IN POSITION, EXTRA ACCESSORY BARS SHALL BE USED AS FOLLOWS:
A. IN SLABS #5 RAISER BARS AT 90mm O/C MAXIMUM TO SUPPORT TOP REINFORCING STEEL.
B. IN WALLS WITH TWO CURTAINS #3 U OR Z SHAPE SPACERS AT 1800mm O/C EW.

C6 BAR LAP SPLICES
DOWELS SHALL BE THE SAME SIZE AND SPACING AS BARS WITH WHICH THEY ARE LAPPED UNLESS OTHERWISE NOTED. THE LAP SPLICES SHALL BE 48 BAR DIAMETER MINIMUM AND STAGGERED. VERTICAL REINFORCING BAR SPLICES IN COLUMNS SHALL HAVE AT LEAST 48 BAR DIAMETER LAP.

C7 STANDARD HOOKS
BARS ENDING IN RIGHT ANGLE BENDS OR HOOKS SHALL CONFORM TO THE REQUIREMENTS OF AC1-318.

C8 SLOPING SLABS
MONOLITHIC SLABS WITH TOPS THAT ARE SLOPED SHALL HAVE BOTTOMS SLOPED THE SAME AMOUNT, MAINTAINING A UNIFORM SLAB THICKNESS, UNLESS OTHERWISE SHOWN.

C9 GROUND SUPPORTED SLABS
CONCRETE SLABS SUPPORTED BY GROUND, UNLESS OTHERWISE NOTED, SHALL BE 150mm THICK REINFORCED WITH #15 @ 300mm AT MID-DEPTH OF SLAB.

STEEL

ST1 APPLICABLE CODE
STEEL CONSTRUCTION SHALL CONFORM TO SPECIFICATIONS AND STANDARDS PRESENTED IN THE NINTH EDITION OF AISC MANUAL OF STEEL CONSTRUCTION.

ST2 MATERIAL
ALL STRUCTURAL SHAPES, BARS, PLATES AND SHEETS INDICATED ON THE DRAWINGS SHALL BE STEEL MEETING ASTM A-36M, UNLESS OTHERWISE NOTED.

ST3 WELDING
WELDING SHALL CONFORM TO AWS CODE FOR ARC AND GAS WELDING IN BUILDING CONSTRUCTION. WELDER SHALL BE CERTIFIED.

ST4 ENCASED STEEL
STEEL COMPLETELY ENCASED IN CONCRETE SHALL NOT BE GALVANIZED OR PAINTED AND SHALL HAVE A CLEAN SURFACE FOR BONDING TO CONCRETE.

ST5 PAINTING
STRUCTURAL STEEL SHALL BE PAINTED IN ACCORDANCE WITH SPECIFICATIONS.

ALUMINUM

A1 APPLICABLE CODE
ALUMINUM CONSTRUCTION SHALL CONFORM TO THE LATEST EDITION OF THE ALUMINUM CONSTRUCTION MANUAL OF THE ALUMINUM ASSOCIATION.

A2 MATERIAL
UNLESS OTHERWISE INDICATED, STRUCTURAL ALUMINUM SHALL BE ALLOY 6061-T6 AS SPECIFIED IN ASTM B-308M.

A3 ALUMINUM IN CONTACT WITH CONCRETE
CONTACT SURFACES SHALL BE COATED WITH HEAVY ALKALI - RESISTANT BITUMINOUS PAINT WHERE ALUMINUM IS IN CONTACT WITH CONCRETE OR MASONRY SURFACES.

AS BUILT

By

MAY 26, 2000
DATE

STRUCTURAL GENERAL NOTES

D-27

DESIGN OVERSIGHT

CALCULATED/ DESIGNED BY	DATE	REVISED BY	DATE REVISED
CHECKED BY			

$DATE$ $TIME$ $FILE$

FOR REDUCED PLANS ORIGINAL SCALE IN MILLIMETERS 0 20 40 60 80

USERNAME => $$$$$$USER$$$$$$
DGN FILE => $$$$$$$$$$DGNSPEC$$$$$$$$$$

CU 00000 EA 000000

ALL DIMENSIONS ARE IN METERS UNLESS OTHERWISE SHOWN

Caltrans Metric

DIST	COUNTY	ROUTE	KILOMETER POST TOTAL PROJECT	SHEET NO.	TOTAL SHEETS
07	LA			43	52

REGISTERED CIVIL ENGINEER

PLANS APPROVAL DATE

X

REGISTERED PROFESSIONAL ENGINEER No. Exp. CIVIL STATE OF CALIFORNIA

BROWN AND CALDWELL
16735 VON KARMAN
IRVINE, CA 92606

The State of California or its officers or agents shall not be responsible for the accuracy or completeness of electronic copies of this plan sheet.

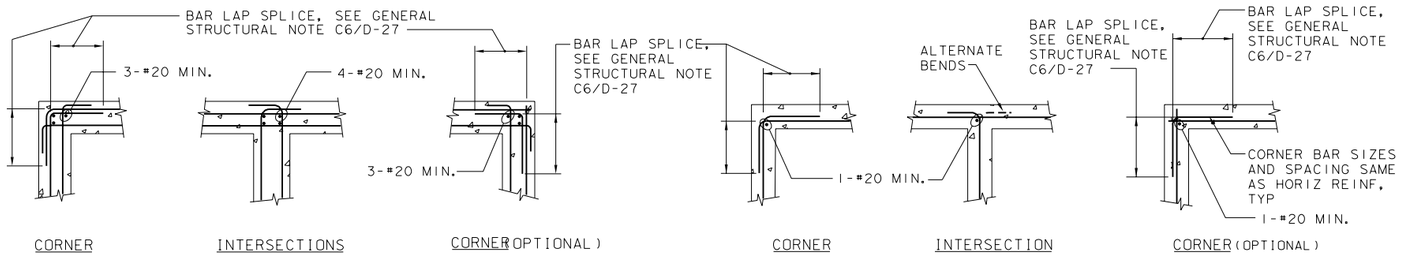

NOTES :

1. ALL 90° BENDS SHALL BE STANDARD HOOKS PER ACI 315 UNLESS OTHERWISE SPECIFIED.
2. SEE OTHER DETAILS AND NOTES FOR SIZE AND SPACING OF REINFORCING.
3. LAP AND HOOK FOOTING BARS AT CORNERS AND INTERSECTIONS SAME AS FOR WALLS EXCEPT THAT ADDED VERTICAL AT CORNERS AND INTERSECTIONS ARE NOT REQUIRED.

REINFORCING STEEL AT WALL INTERSECTIONS

DETAIL 1/VAR

SCALE: NO SCALE

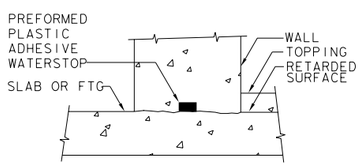

TYPICAL JOINT W/ PLASTIC ADHESIVE WATERSTOP

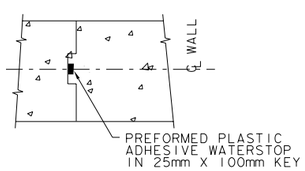

TYPICAL KEY W/ PVC WATERSTOP

VERTICAL CONSTRUCTION JOINTS IN WALLS

TYPICAL CONSTRUCTION JOINTS

DETAIL 2/VAR

SCALE: NO SCALE

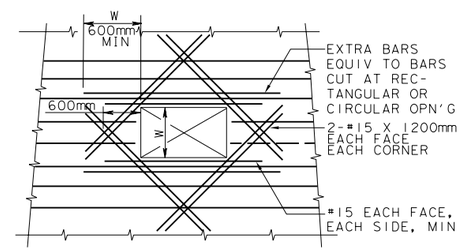

REINFORCEMENT AT SLAB AND WALL OPENINGS

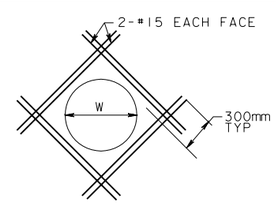

FOR CIRCULATION OPENING

NOTES:

1. TRANSVERSE REINFORCEMENT NOT SPECIFIED, BUT SHALL BE TREATED IN SAME MANNER AS BARS SHOWN.
2. W = DIMENSION OF OPENING PERPENDICULAR TO BARS CUT.
   FOR CIRCULAR OPENINGS W = DIAMETER
3. SEE MECH, ELEC AND ARCH DRAWINGS FOR SLAB & WALL OPENINGS NOT SPECIFIED ON STRUCTURAL DRAWINGS.
4. SUPPLEMENTARY REINFORCING NOT REQUIRED WHEN SPECIFIED REINFORCING IS NOT CUT.
5. ALL OPENINGS, IN WALLS AND SLABS LARGER THAN 200mm IN ANY ONE DIRECTION SHALL CONFORM TO DETAIL.

REINFORCEMENT AT SLAB AND WALL OPENINGS

DETAIL 3/VAR

SCALE: NO SCALE

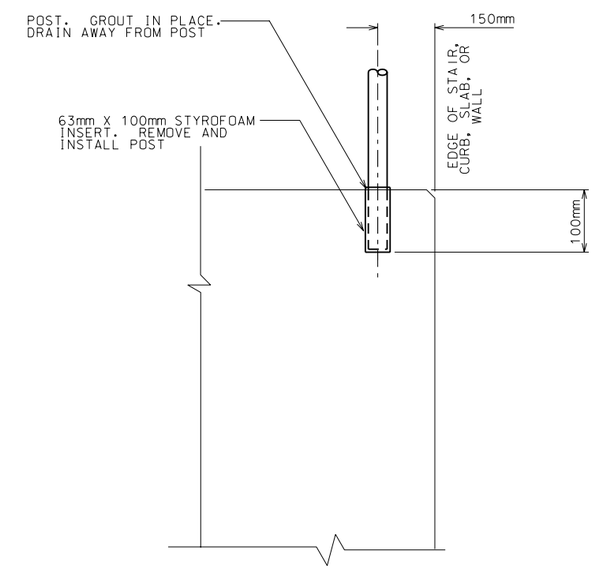

CHAINLINK FENCE POST MOUNTING

DETAIL 4/VAR

SCALE: NO SCALE

AS BUILT

By

MAY 26, 2000

DATE

TYPICAL CONCRETE AND MISCELLANEOUS DETAILS

D-28

DATE	REVISED BY	DATE REVISED

CALCULATED/DESIGNED BY

CHECKED BY

DESIGN OVERSIGHT

STATE OF CALIFORNIA - DEPARTMENT OF TRANSPORTATION

Caltrans

$DATE$ $TIME$ $FILE$

FOR REDUCED PLANS ORIGINAL SCALE IN MILLIMETERS 0 20 40 60 80

USERNAME => $$$$$$USER$$$$$$
DGN FILE => $$$$$$$$$$DGNSPEC$$$$$$$$$$

CU 00000

EA 000000

ALL DIMENSIONS ARE IN
METERS UNLESS OTHERWISE SHOWN

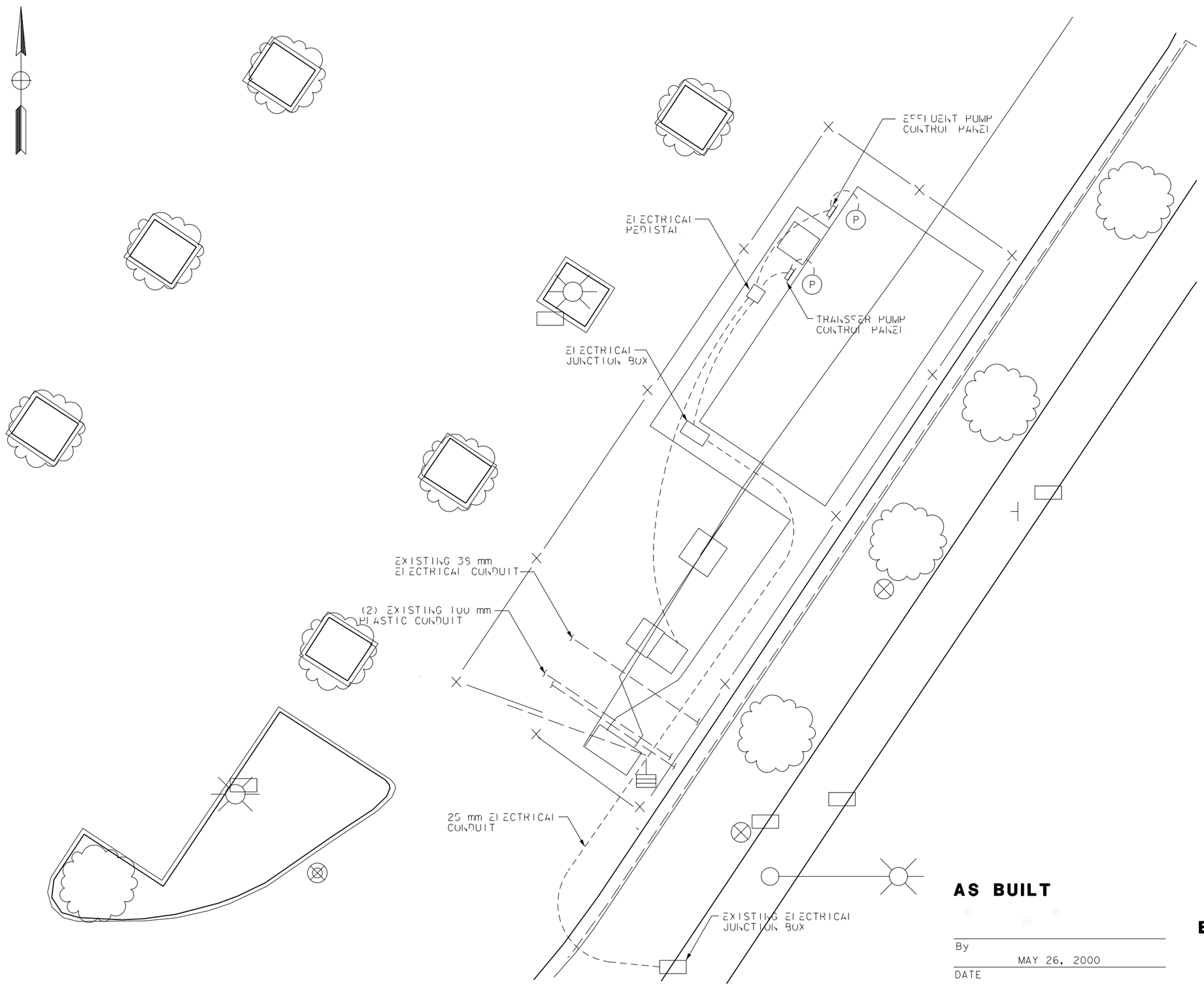

DIST	COUNTY	ROUTE	KILOMETER POST TOTAL PROJECT	SHEET NO.	TOTAL SHEETS
07	LA	X	X	51	52

REGISTERED ELECTRICAL ENGINEER

PLANS APPROVAL DATE

X

REGISTERED PROFESSIONAL ENGINEER
RAMESH L. JHURANI
No. E 8121
Exp. 09-30-98
ELECTRICAL
STATE OF CALIFORNIA

BROWN AND CALDWELL
16735 VON KARMAN
IRVINE, CA 92606

The State of California or its officers or agents shall not be responsible for the accuracy or completeness of electronic copies of this plan sheet.

NOTE:

SEE DWG E-9 FOR LEGEND, NOTES AND DETAILS.

AS BUILT

By

MAY 26, 2000

DATE

ELECTRICAL PLAN, SITE 8 (I-105/LAKEWOOD BLVD)

SCALE 1:100

E-8

DATE	REVISED BY
	DATE REVISED

CALCULATED/DESIGNED BY

CHECKED BY

PROJECT ENGINEER

STATE OF CALIFORNIA - DEPARTMENT OF TRANSPORTATION

$DATE$ $TIME$ $FILE$

FOR REDUCED PLANS
ORIGINAL SCALE IN MILLIMETERS 0 20 40 60 80

USERNAME => $$$$$$USER$$$$$$
DGN FILE => $$$$$$$$$$DGNSPEC$$$$$$$$$$

CU 00000

EA 000000

ALL DIMENSIONS ARE IN
METERS UNLESS OTHERWISE SHOWN

DIST	COUNTY	ROUTE	KILOMETER POST TOTAL PROJECT	SHEET NO.	TOTAL SHEETS
07	LA	VAR	VAR	52	52

REGISTERED ELECTRICAL ENGINEER

PLANS APPROVAL DATE

X

REGISTERED PROFESSIONAL ENGINEER
RAMESH L. JHURANI
No. E 8121
Exp. 09-30-98
ELECTRICAL
STATE OF CALIFORNIA

BROWN AND CALDWELL
16735 VON KARMAN
IRVINE, CA 92606

The State of California or its officers or agents shall not be responsible for the accuracy or completeness of electronic copies of this plan sheet.

LEGEND:

- WP — STANCHION MOUNTED JUNCTION BOX, WEATHERPROOF
- WP — STANCHION MOUNTED DUPLEX RECEPTACLE OUTLET, WEATHERPROOF
- EXISTING SWITCHBOARD/PANELBOARD AND CABINET
- (E) — EXISTING ELECTRICAL EQUIPMENT
- CROSS LINES INDICATES NUMBER OF #12 AWG. NO CROSS LINES INDICATES 2# 12 AWG, UNLESS OTHERWISE NOTED. ALL CONDUIT 1/2" UNLESS OTHERWISE NOTED
- P-1, 3 — HOMERUN TO PANELBOARD CIRCUIT NUMBERS 1 AND 3
- --- MC --- CONDUIT, METALIC UNDERGROUND
- ----E---- EXISTING CONDUIT TO REMAIN
- WP — STANCHION MOUNTED MOTOR STARTER FOR THE EFFLUENT PUMP, WEATHERPROOF
- EFFLUENT PUMP MOTOR WITH FLOAT SWITCH

NOTES:

1. TYPE III-BF SERVICE EQUIPMENT ENCLOSURE WITH PROVISIONS FOR ONE 100A METER, 100A, 120/240V, 1-PHASE, 3-WIRE 12-CIRCUIT PANELBOARD "P" WITH 50A/2P MAIN AND 1-30A/2P, 6-20A/1P BRANCH CIRCUIT BREAKERS
2. FOR CONNECTION OF INFLUENT/IN-FLOW SAMPLER AND FLOW METER
3. FOR CONNECTION OF EFFLUENT/OUT FLOW SAMPLER AND FLOW METER
4. EFFLUENT PUMP MOTOR (208/230V, 1-PHASE) WITH FLOAT SWITCH
5. NEMA SIZE 1, 240V, 1-PHASE MOTOR STARTER WITH H-O-A (HAND-OFF-AYTOMATIC) SWITCH FOR FLOAT CONTROL

DATE	REVISED BY	DATE	REVISED
12/97		12/97	

CALCULATED/DESIGNED BY

CHECKED BY

DESIGN OVERSIGHT

$DATE$ $TIME$ $FILE$

AS BUILT

By

MAY 26, 2000

DATE

ELECTRICAL LEGEND, NOTES AND DETAILS

E-9

FOR REDUCED PLANS
ORIGINAL SCALE IN MILLIMETERS 0 20 40 60 80

USERNAME => $$$$$$USER$$$$$$
DGN FILE => $$$$$$$$$$DGNSPEC$$$$$$$$$$

CU 00000

EA 000000