INDEX OF SHEETS

DIST	COUNTY	ROUTE	KILOMETER POST TOTAL PROJECT	SHEET No	TOTAL SHEETS
07	LA	5,605	7.5, 10.9		

STATE OF CALIFORNIA

DEPARTMENT OF TRANSPORTATION

PROJECT PLANS FOR CONSTRUCTION ON

STATE HIGHWAY

IN LOS ANGELES COUNTY
IN DOWNEY AND CERRITOS
AT ROUTE 5/605 SEPARATION
AND AT ROUTE 605/91 SEPARATION

To be supplemented by Standard Plans dated July, 1997

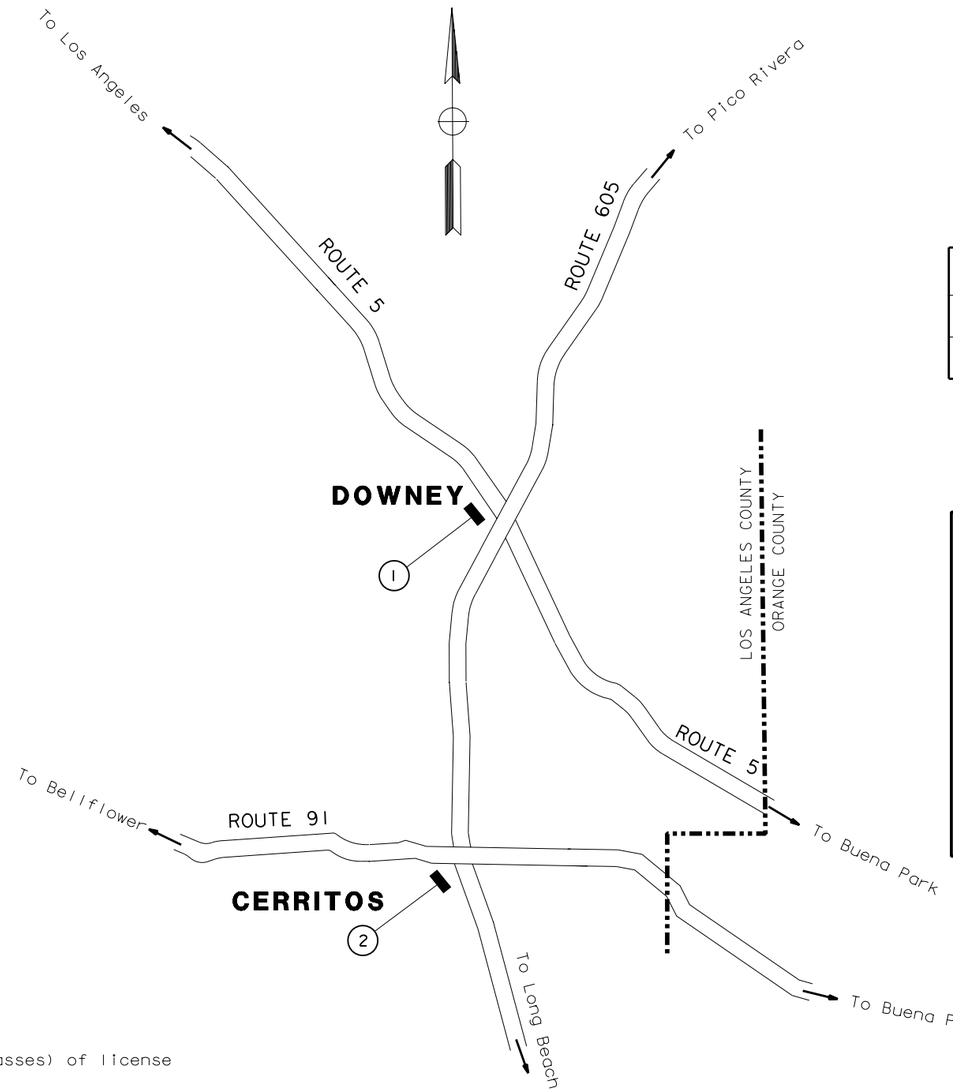

LOCATION MAP

The State of California or its officers or agents shall not be responsible for the accuracy or completeness of electronic copies of this plan sheet.

LOCATION OF CONSTRUCTION

LOC	ROUTE	KP	PM	DESCRIPTION
(1)	5	10.9	6.8	SS CONNECTOR
(2)	605	7.5	4.7	ES CONNECTOR

Caltrans Metric

AS BUILT LEGEND

ITALICS ADDED NOTES

~~STRIKE OUT~~ REMOVED ITEMS

ENVIRONMENTAL DEPARTMENT

AS BUILT

DESIGN CONSULTANT By

AS BUILT DWG COMPLETION DATE AUGUST 1, 2000

CALTRANS PERFORMED FIELD INSPECTION AS BUILT CONDITIONS BASED ON CHANGE ORDERS AND POST CONSTRUCTION OBSERVATIONS.

Project Engineer Date
Registered Civil Engineer

REGISTERED PROFESSIONAL ENGINEER
DOUGLAS B. ROBISON
No. 37109
Exp. 06-30-00
CIVIL
STATE OF CALIFORNIA

Plans Approval Date

Approved as to impact on State facilities and conformance with applicable state standards and practices and that technical oversight was performed as described in the California Department of Transportation A & E Consultant Service Manual.

$DATE$	$TIME$	$FILE$	REGISTRATION NO.	DATE
PROJECT ENGINEER	DESIGN OVERSIGHT APPROVAL			
DOUG ROBISON	REFUGIO DOMINGUEZ		50820	5/12/98

The Contractor shall possess the Class (or Classes) of license as specified in the ''Notice to Contractors''.

BROWN AND CALDWELL
16735 VON KARMAN
IRVINE, CA 92606

Contract No. **07-191104**

LAST REVISION 00-00-00
DATE PLOTTED => $DATE
TIME PLOTTED => $TIME

DIST	COUNTY	ROUTE	KILOMETER POST TOTAL PROJECT	SHEET NO.	TOTAL SHEETS
07	LA	5,605	7.5, 10.9		

REGISTERED CIVIL ENGINEER DATE

PLANS APPROVAL DATE

X

REGISTERED PROFESSIONAL ENGINEER — DOUGLAS B. ROBISON — No. 37109 — Exp. 06-30-00 — CIVIL — STATE OF CALIFORNIA

BROWN AND CALDWELL
16735 VON KARMAN
IRVINE, CA 92606

The State of California or its officers or agents shall not be responsible for the accuracy or completeness of electronic copies of this plan sheet.

Caltrans Metric

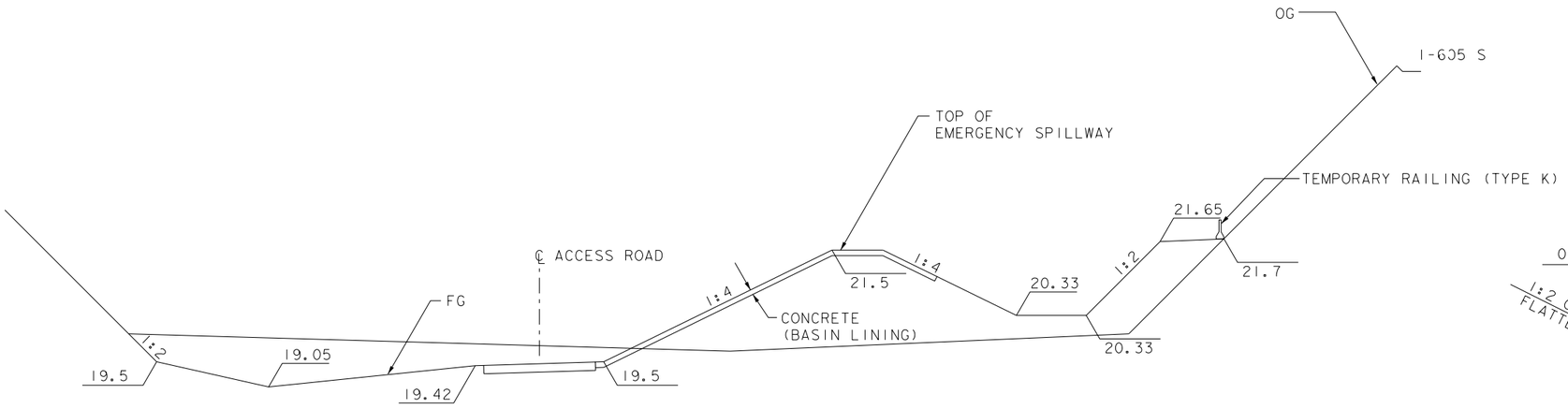

SECTION B / D-2

SCALE: Horiz: 1:100
Vert: 1:50

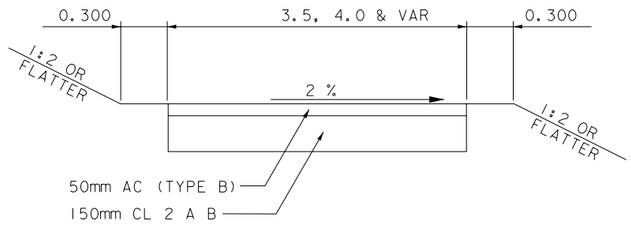

ACCESS ROAD CROSS SECTION C / VAR

NOT TO SCALE

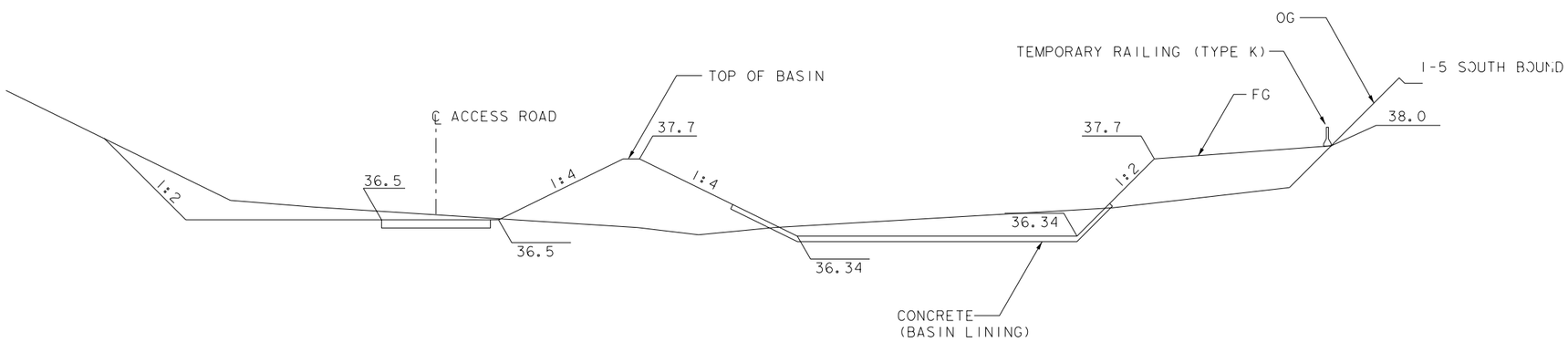

SECTION A / D-1

SCALE: Horiz: 1:100
Vert: 1:50

AS BUILT

TYPICAL CROSS SECTIONS

SCALE AS NOTED

ALL DIMENSIONS ARE IN METERS UNLESS OTHERWISE SHOWN

X-1

CALCULATED/DESIGNED BY CF DATE 5/98 REVISED BY
CHECKED BY DR 5/98 DATE REVISED

DESIGN OVERSIGHT
REFUGIO DOMINGUEZ

STATE OF CALIFORNIA - DEPARTMENT OF TRANSPORTATION
Caltrans

$DATE$ $TIME$ $FILE$

FOR REDUCED PLANS ORIGINAL SCALE IN MILLIMETERS 0 20 40 60 80

USERNAME => $$$$$$USER$$$$$$
DGN FILE => 278D10

CU 07279

EA 19110I

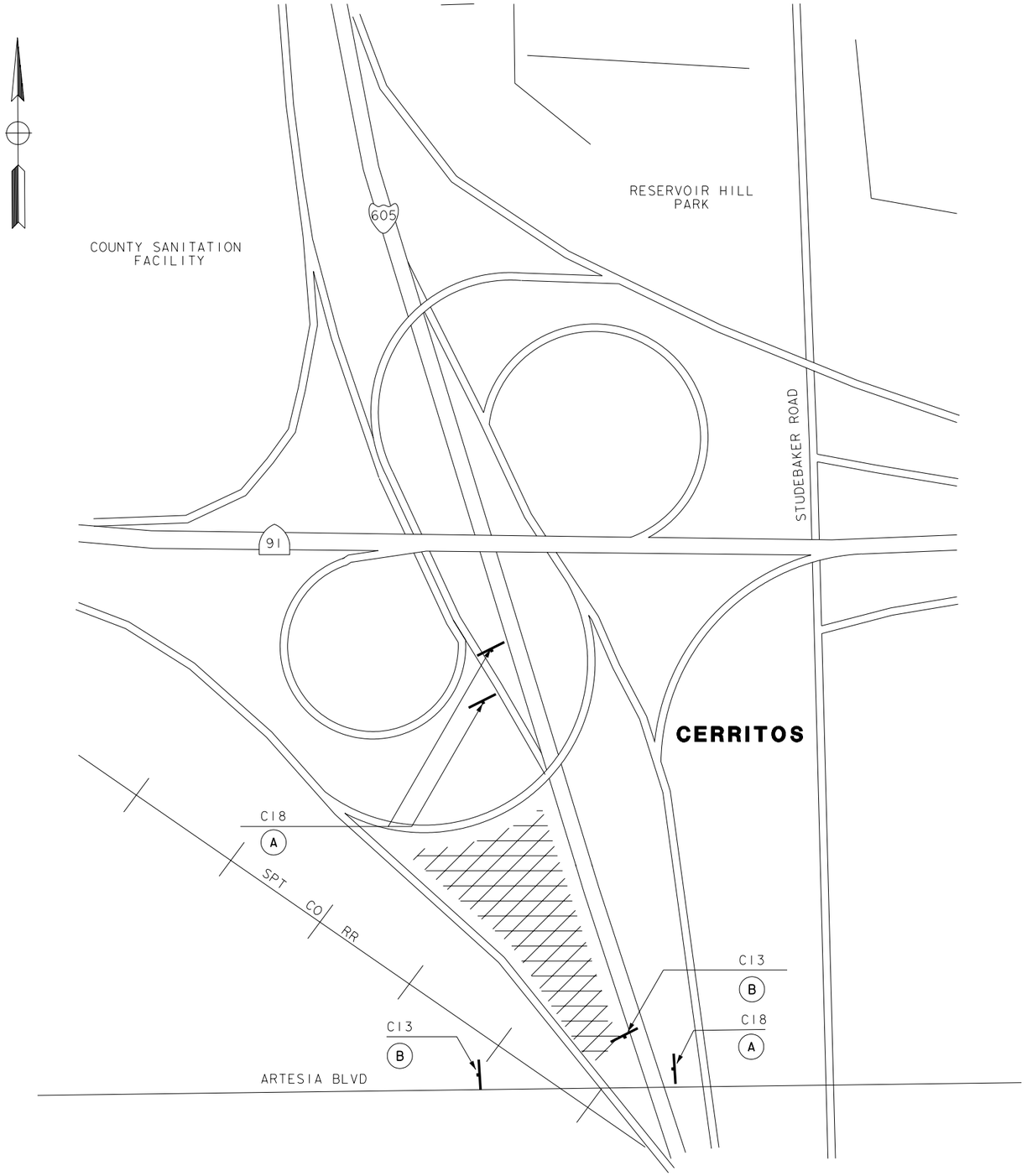

DIST	COUNTY	ROUTE	KILOMETER POST TOTAL PROJECT	SHEET NO.	TOTAL SHEETS
07	LA	5, 605	7.5, 10.9		

REGISTERED CIVIL ENGINEER DATE

PLANS APPROVAL DATE

X

REGISTERED PROFESSIONAL ENGINEER — DOUGLAS B. ROBISON — No. 37109 — Exp. 06-30-00 — CIVIL — STATE OF CALIFORNIA

BROWN AND CALDWELL
16735 VON KARMAN
IRVINE, CA 92606

The State of California or its officers or agents shall not be responsible for the accuracy or completeness of electronic copies of this plan sheet.

CONSTRUCTION AREA SIGNS

SIGN NO	CODE	PANEL SIZE (mm)	SIGN MESSAGE	NO. OF POSTS AND SIZE	NO. OF SIGNS
(A)	C18	1200 X 1200	ROAD CONSTRUCTION AHEAD	2-100mm X 150mm (S)	3
(B)	C13	1200 X 450	END CONSTRUCTION	2-100mm X 150mm (S)	2

(S) DENOTES STATIONARY MOUNTED SIGN
EXACT LOCATION TO BE DETERMINED BY THE ENGINEER.

LEGEND:
SHADED AREA IS CONSTRUCTION AREA.

AS BUILT

CONSTRUCTION AREA SIGNS

ALL DIMENSIONS ARE IN METERS UNLESS OTHERWISE SHOWN

CS-2

CALCULATED/ DESIGNED BY	CF	DATE 5/98	REVISED BY
CHECKED BY	DR	5/98	DATE REVISED

DESIGN OVERSIGHT
REFUGIO DOMINGUEZ

STATE OF CALIFORNIA - DEPARTMENT OF TRANSPORTATION
Caltrans

$DATE$ $TIME$ $FILE$

FOR REDUCED PLANS
ORIGINAL SCALE IN MILLIMETERS 0 20 40 60 80

USERNAME => $$$$$$USER$$$$$$
DGN FILE => 278CS2

CU 07279

EA 191101

DIST	COUNTY	ROUTE	KILOMETER POST TOTAL PROJECT	SHEET NO.	TOTAL SHEETS
07	LA	5, 605	7.5, 10.9		

REGISTERED CIVIL ENGINEER — DATE

REGISTERED PROFESSIONAL ENGINEER — DOUGLAS B. ROBISON — No. 37109 — Exp. 06-30-00 — CIVIL — STATE OF CALIFORNIA

PLANS APPROVAL DATE

X

BROWN AND CALDWELL
16735 VON KARMAN
IRVINE, CA 92606

The State of California or its officers or agents shall not be responsible for the accuracy or completeness of electronic copies of this plan sheet.

Caltrans Metric

EXISTING 600 mm RCP

EXISTING 300 mm CSP

1 BEGIN TEMPORARY RAILING (TYPE K)

2

50 m TEMPORARY RAILING (TYPE K)

N 541500

E 1995500

22.0 21.5 21.0 20.5 20.0 19.5

3.7 m WIDE EMERGENCY SPILLWAY

1:4 (TYP)

2.5 m

S=0.5%

22.6 m

20.5 21.0 21.5

0.6 m (TYP)

4 m (TYP)

1:2 (TYP)

102 m MBGR

TOE OF SLOPE

I-605 S

SR91 E/I-605 S CONNECTOR

3 4 5 6 7 8 9 10 11 12 13 14 15 16 17 18 22 23 24 25

a b c d e f

LIMITS OF GRADING

MATCH LINE SEE SHEET L-4

LEGEND

PAVED ACCESS ROAD

DIRECTION OF FLOW

NOTES:

1. FOR HORIZONTAL CONTROL TABLE AND CURVE DATA, SEE SHEET L-4.
2. FOR COMPLETE R/W AND ACCURATE ACCESS DATA, SEE R/W RECORD MAPS AT DISTRICT OFFICE.

AS BUILT

I-605/SR91 EXTENDED DETENTION BASIN

THIS PLAN SHEET ACCURATE FOR LAYOUT WORK ONLY

ALL DIMENSIONS ARE IN METERS UNLESS OTHERWISE SHOWN

LAYOUT
SCALE 1:200

L-3

CALCULATED/ DESIGNED BY	CF	DATE 5/98	REVISED BY
CHECKED BY	DR	5/98	DATE REVISED

STATE OF CALIFORNIA - DEPARTMENT OF TRANSPORTATION
Caltrans

DESIGN OVERSIGHT
REFUGIO DOMINGUEZ

$DATE$ $TIME$ $FILE$

FOR REDUCED PLANS ORIGINAL SCALE IN MILLIMETERS 0 20 40 60 80

USERNAME => $$$$$$USER$$$$$$
DGN FILE => $$$$$$$$$$DGNSPEC$$$$$$$$$$

CU 07279

EA 19110I

DIST	COUNTY	ROUTE	KILOMETER POST TOTAL PROJECT	SHEET NO.	TOTAL SHEETS
07	LA	5, 605	7.5; 10.9		

REGISTERED CIVIL ENGINEER DATE

PLANS APPROVAL DATE

X

REGISTERED PROFESSIONAL ENGINEER — DOUGLAS B. ROBISON — No. 37109 — Exp. 06-30-00 — CIVIL — STATE OF CALIFORNIA

BROWN AND CALDWELL
16735 VON KARMAN
IRVINE, CA 92606

The State of California or its officers or agents shall not be responsible for the accuracy or completeness of electronic copies of this plan sheet.

Caltrans Metric

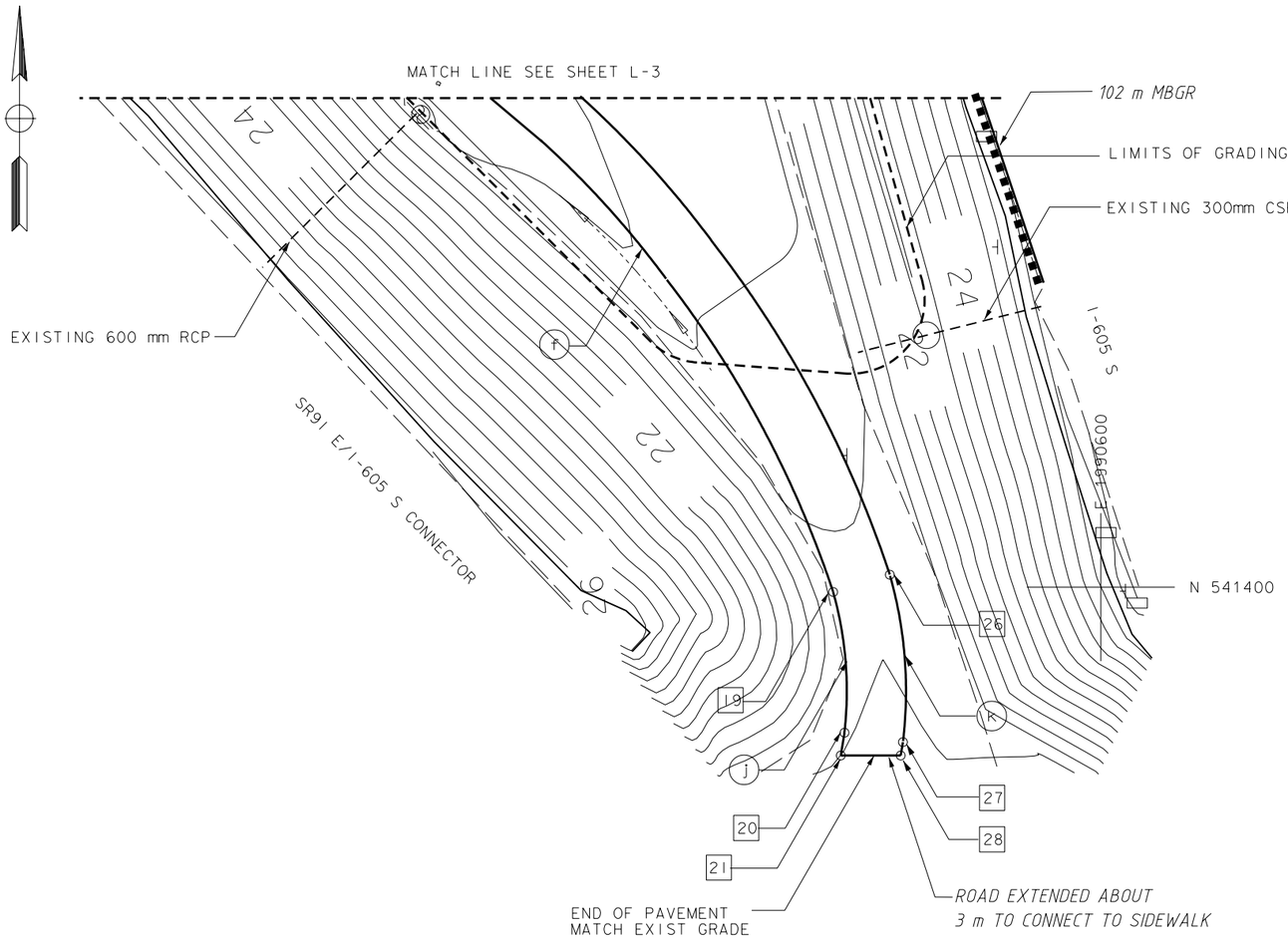

HORIZONTAL CONTROL TABLE			
PNT	NORTHING	EASTING	ELEV.
1	541 495.126	1 990 566.076	
2	541 492.990	1 990 565.730	
3	541 476.563	1 990 556.118	
4	541 474.289	1 990 555.805	
5	541 462.772	1 990 558.819	
6	541 458.617	1 990 559.907	
7	541 447.323	1 990 562.862	
8	541 444.752	1 990 567.257	
9	541 446.921	1 990 575.548	
10	541 444.756	1 990 579.195	
11	541 483.055	1 990 549.605	
12	541 485.330	1 990 549.918	
13	541 488.009	1 990 549.217	19.40
14	541 490.152	1 990 545.555	19.40
15	541 489.139	1 990 541.685	
16	541 485.477	1 990 539.543	19.40
17	541 444.057	1 990 550.383	19.50
18	541 435.619	1 990 555.711	19.50
19	541 399.668	1 990 581.916	20.00
20	541 390.165	1 990 582.679	
21	541 388.621	1 990 582.429	
22	541 481.059	1 990 548.437	
23	541 472.036	1 990 547.195	
24	541 445.070	1 990 554.253	19.50
25	541 438.677	1 990 558.289	19.50
26	541 400.843	1 990 585.740	20.00
27	541 389.525	1 990 586.627	
28	541 388.621	1 990 586.481	

LEGEND

PAVED ACCESS ROAD

DIRECTION OF FLOW

NOTE:

FOR COMPLETE R/W AND ACCURATE ACCESS DATA, SEE R/W RECORD MAPS AT DISTRICT OFFICE.

CURVE DATA

NO.	Δ	R	L	T
a	44°59'58"	11.90	9.35	4.93
b	45°00'01"	3.00	2.36	1.24
c	90°00'00"	3.00	4.71	3.00
d	89°59'59"	3.00	4.71	3.00
e	38°06'59"	16.50	10.98	5.70
f	33°46'57"	74.75	44.07	22.70
g	27°03'55"	20.00	9.45	4.81
h	38°06'59"	12.50	8.32	4.32
j	33°46'57"	78.75	46.43	23.91
k	27°03'55"	24.00	11.34	5.78

AS BUILT

I-605/SR91
EXTENDED DETENTION BASIN

THIS PLAN SHEET ACCURATE FOR LAYOUT WORK ONLY

ALL DIMENSIONS ARE IN METERS UNLESS OTHERWISE SHOWN

LAYOUT
SCALE 1:200

L-4

CALCULATED/ DESIGNED BY	DATE	REVISED BY
CF	5/98	
CHECKED BY	DATE	DATE REVISED
DR	5/98	

DESIGN OVERSIGHT

REFUGIO DOMINGUEZ

STATE OF CALIFORNIA - DEPARTMENT OF TRANSPORTATION

Caltrans

$DATE$ $TIME$ $FILE$

FOR REDUCED PLANS ORIGINAL SCALE IN MILLIMETERS 0 20 40 60 80

USERNAME => $$$$$$USER$$$$$$
DGN FILE => $$$$$$$$$$DGNSPEC$$$$$$$$$$

CU 07279

EA 191101

DIST	COUNTY	ROUTE	KILOMETER POST TOTAL PROJECT	SHEET NO.	TOTAL SHEETS
07	LA	5,605	7.5, 10.9		

REGISTERED CIVIL ENGINEER DATE

PLANS APPROVAL DATE

X

REGISTERED PROFESSIONAL ENGINEER — DOUGLAS B. ROBISON — No. 37109 — Exp. 06-30-00 — CIVIL — STATE OF CALIFORNIA

BROWN AND CALDWELL
16735 VON KARMAN
IRVINE, CA 92606

The State of California or its officers or agents shall not be responsible for the accuracy or completeness of electronic copies of this plan sheet.

Caltrans Metric

EXISTING 600 mm RCP

(i) DRAINAGE INLET (TYPE GMP). REMOVE 2 m OF EXISTING 300 mm CSP TO MAKE CONNECTION. 300 mm CSP WEST OF NEW INLET TO BE LEFT IN PLACE.

(j) EXISTING 300 mm CSP

(a) 300 mm CSP

LEGEND

(1) DRAINAGE SYSTEM NO

(a) DRAINAGE UNIT

PAVED ACCESS ROAD

DIRECTION OF FLOW

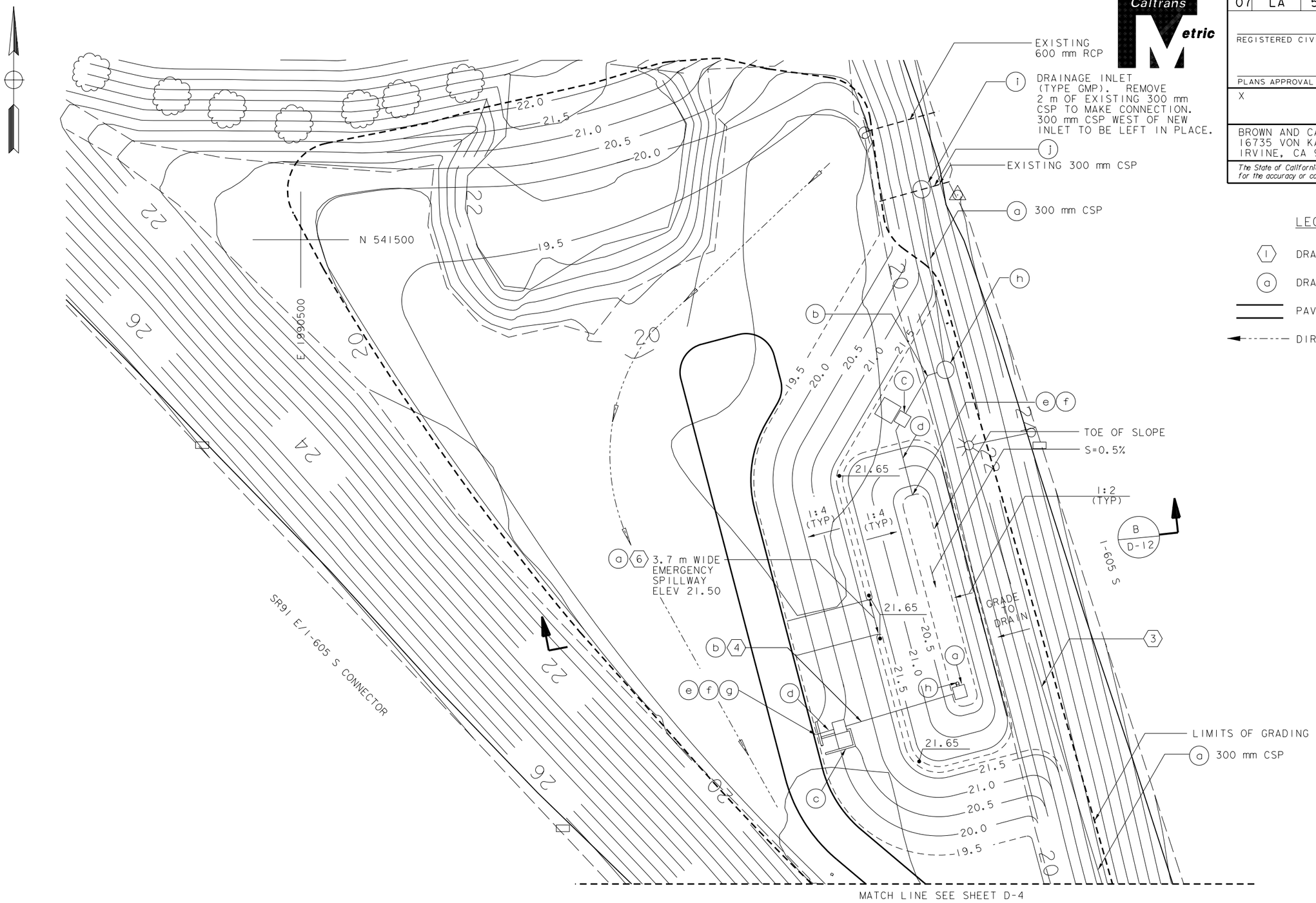

AS BUILT

I-605/SR91 EXTENDED DETENTION BASIN

THIS PLAN SHEET ACCURATE FOR DRAINAGE WORK ONLY

ALL DIMENSIONS ARE IN METERS UNLESS OTHERWISE SHOWN

DRAINAGE PLAN

SCALE 1:200 **D-3**

CALCULATED/ DESIGNED BY	CF	DATE 5/98	REVISED BY
CHECKED BY	DR	5/98	DATE REVISED

STATE OF CALIFORNIA - DEPARTMENT OF TRANSPORTATION

Caltrans

DESIGN OVERSIGHT

REFUGIO DOMINGUEZ

$DATE$ $TIME$ $FILE$

FOR REDUCED PLANS ORIGINAL SCALE IN MILLIMETERS 0 20 40 60 80

USERNAME => $$$$$$USER$$$$$$
DGN FILE => $$$$$$$$$$DGNSPEC$$$$$$$$$$

CU 07279

EA 19110I

DIST	COUNTY	ROUTE	KILOMETER POST TOTAL PROJECT	SHEET NO.	TOTAL SHEETS
07	LA	5, 605	7.5, 10.9		

REGISTERED CIVIL ENGINEER DATE

PLANS APPROVAL DATE

X

REGISTERED PROFESSIONAL ENGINEER DOUGLAS B. ROBISON No. 37109 Exp. 06-30-00 CIVIL STATE OF CALIFORNIA

BROWN AND CALDWELL
16735 VON KARMAN
IRVINE, CA 92606

The State of California or its officers or agents shall not be responsible for the accuracy or completeness of electronic copies of this plan sheet.

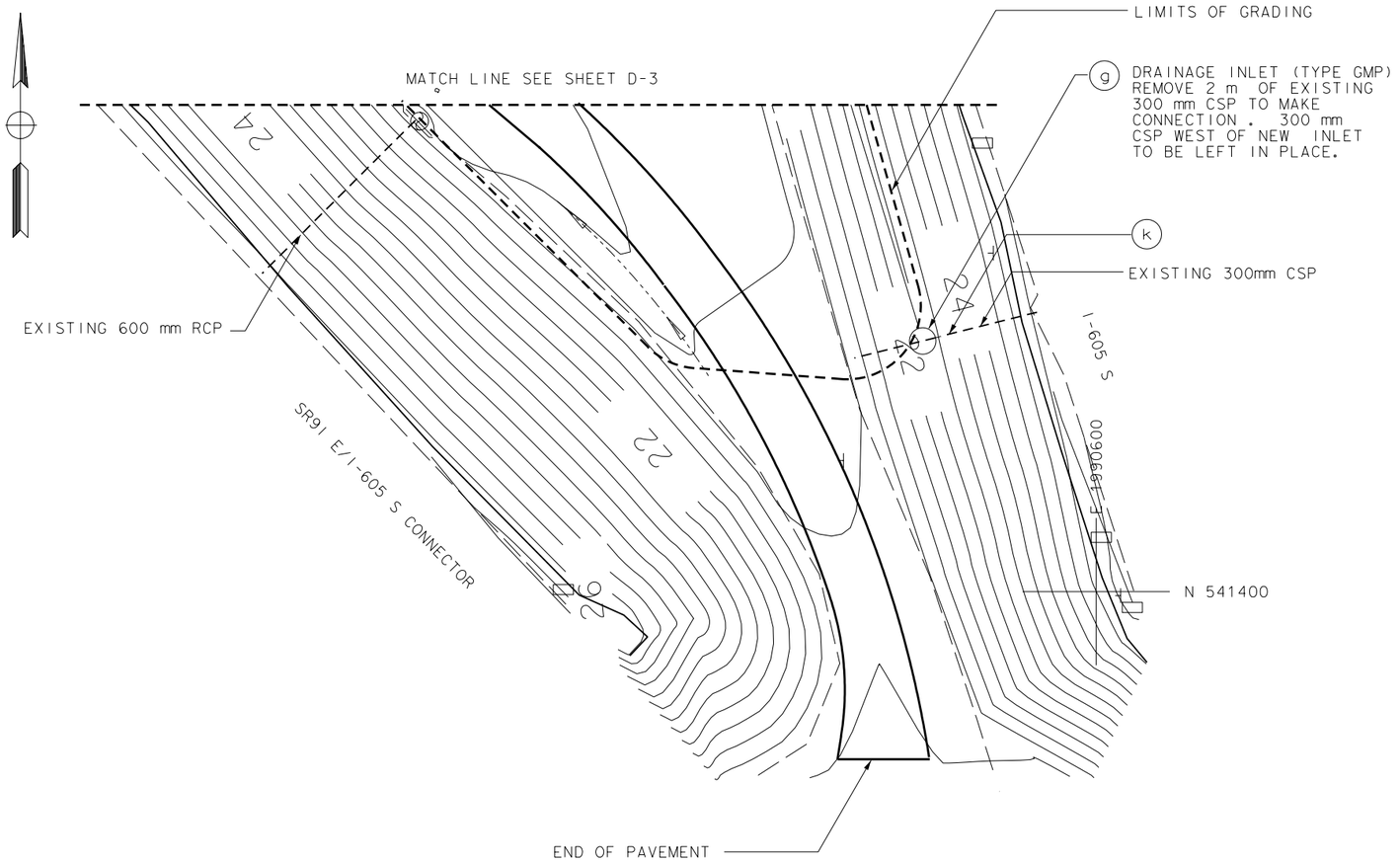

LEGEND

- (1) DRAINAGE SYSTEM NO
- (a) DRAINAGE UNIT
- PAVED ACCESS ROAD
- DIRECTION OF FLOW

AS BUILT

I-605/SR91
EXTENDED DETENTION BASIN

THIS PLAN SHEET ACCURATE FOR DRAINAGE WORK ONLY

ALL DIMENSIONS ARE IN METERS UNLESS OTHERWISE SHOWN

DRAINAGE PLAN

SCALE 1:200

D-4

CALCULATED/ DESIGNED BY	CF	DATE 5/98	REVISED BY
CHECKED BY	DR	5/98	DATE REVISED

DESIGN OVERSIGHT
REFUGIO DOMINGUEZ

STATE OF CALIFORNIA - DEPARTMENT OF TRANSPORTATION

Caltrans

$DATE$ $TIME$ $FILE$

FOR REDUCED PLANS ORIGINAL SCALE IN MILLIMETERS 0 20 40 60 80

USERNAME => $$$$$$USER$$$$$$
DGN FILE => $$$$$$$$$$DGNSPEC$$$$$$$$$$

CU 07279

EA 91101

DRAINAGE SYSTEM NO (3)

SACLE: HORIZ: 1 : 100
VERT: 1 : 50

ALL DIMENSIONS ARE IN
METERS UNLESS OTHERWISE SHOWN

AS BUILT

DRAINAGE PROFILES

SCALE: AS NOTED

D-6

DIST	COUNTY	ROUTE	KILOMETER POST TOTAL PROJECT	SHEET NO.	TOTAL SHEETS
07	LA	5, 605	7.5, 10.9		

REGISTERED CIVIL ENGINEER DATE

PLANS APPROVAL DATE

X

REGISTERED PROFESSIONAL ENGINEER
DOUGLAS B. ROBISON
No. 37109
Exp. 06-30-00
CIVIL
STATE OF CALIFORNIA

Caltrans Metric

BROWN AND CALDWELL
16735 VON KARMAN
IRVINE, CA 92606

The State of California or its officers or agents shall not be responsible for the accuracy or completeness of electronic copies of this plan sheet.

REVISED BY | DATE REVISED
CF | DATE 5/98
DR | 5/98
CALCULATED/DESIGNED BY | CHECKED BY
DESIGN OVERSIGHT | REFUGIO DOMINGUEZ

STATE OF CALIFORNIA - DEPARTMENT OF TRANSPORTATION
Caltrans

$DATE$ $TIME$ $FILE$

Station
m^3 Exc
Emb

FOR REDUCED PLANS
ORIGINAL SCALE IN MILLIMETERS
0 20 40 60 80

USERNAME => $$$$$$USER$$$$$$
DGN FILE => $$$$$$$$$$DGNSPEC$$$$$$$$$$$

CU 07279

EA 191101

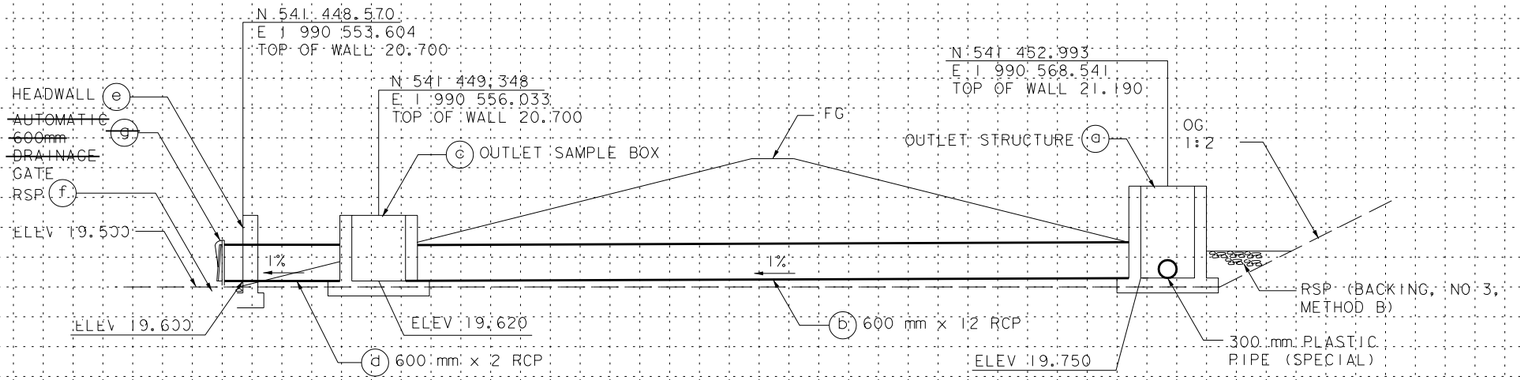

DRAINAGE SYSTEM NO 4

SCALE: HORIZ: 1 :50
VERT: 1 :50

DIST	COUNTY	ROUTE	KILOMETER POST TOTAL PROJECT	SHEET NO.	TOTAL SHEETS
07	LA	5,605	7.5, 10.9		

REGISTERED CIVIL ENGINEER DATE

REGISTERED PROFESSIONAL ENGINEER — DOUGLAS B. ROBISON — No. 37109 — Exp. 06-30-00 — CIVIL — STATE OF CALIFORNIA

PLANS APPROVAL DATE

X

BROWN AND CALDWELL
16735 VON KARMAN
IRVINE, CA 92606

The State of California or its officers or agents shall not be responsible for the accuracy or completeness of electronic copies of this plan sheet.

REVISED BY	DATE REVISED

CALCULATED/DESIGNED BY: CF DATE 5/98
CHECKED BY: DR 5/98

DESIGN OVERSIGHT
REFUGIO DOMINGUEZ

STATE OF CALIFORNIA - DEPARTMENT OF TRANSPORTATION
Caltrans

$FILE$
$TIME$
$DATE$

AS BUILT

ALL DIMENSIONS ARE IN METERS UNLESS OTHERWISE SHOWN

DRAINAGE PROFILES

SCALE: AS NOTED

D-7

FOR REDUCED PLANS ORIGINAL SCALE IN MILLIMETERS 0 20 40 60 80

USERNAME => $$$$$$USER$$$$$$
DGN FILE => $$$$$$$$$$DGNSPEC$$$$$$$$$$

CU 07279

EA 19110I

DIST	COUNTY	ROUTE	KILOMETER POST TOTAL PROJECT	SHEET NO.	TOTAL SHEETS
07	LA	5,605	7.5, 10.9		

REGISTERED CIVIL ENGINEER DATE

PLANS APPROVAL DATE

X

REGISTERED PROFESSIONAL ENGINEER — DOUGLAS B. ROBISON — No. 37109 — Exp. 06-30-00 — CIVIL — STATE OF CALIFORNIA

BROWN AND CALDWELL
16735 VON KARMAN
IRVINE, CA 92606

The State of California or its officers or agents shall not be responsible for the accuracy or completeness of electronic copies of this plan sheet.

Caltrans Metric

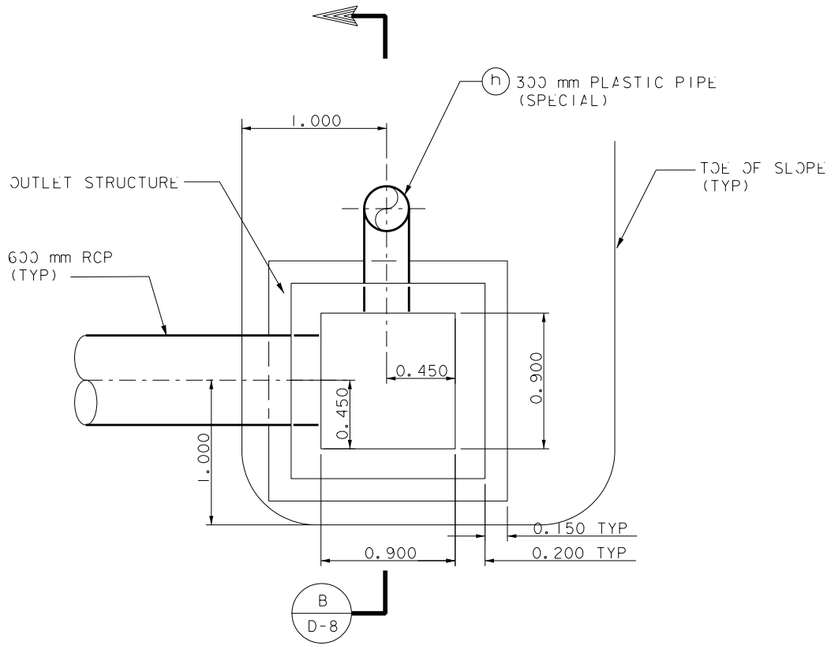

OUTLET STRUCTURE PLAN

DRAINAGE SYSTEM NO 4 (a)

SCALE: 1:20

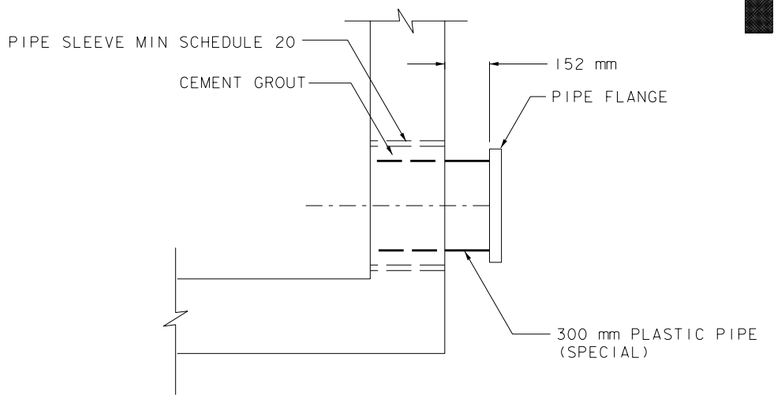

PIPE PENETRATION DETAIL (3)

SACLE: 1:10

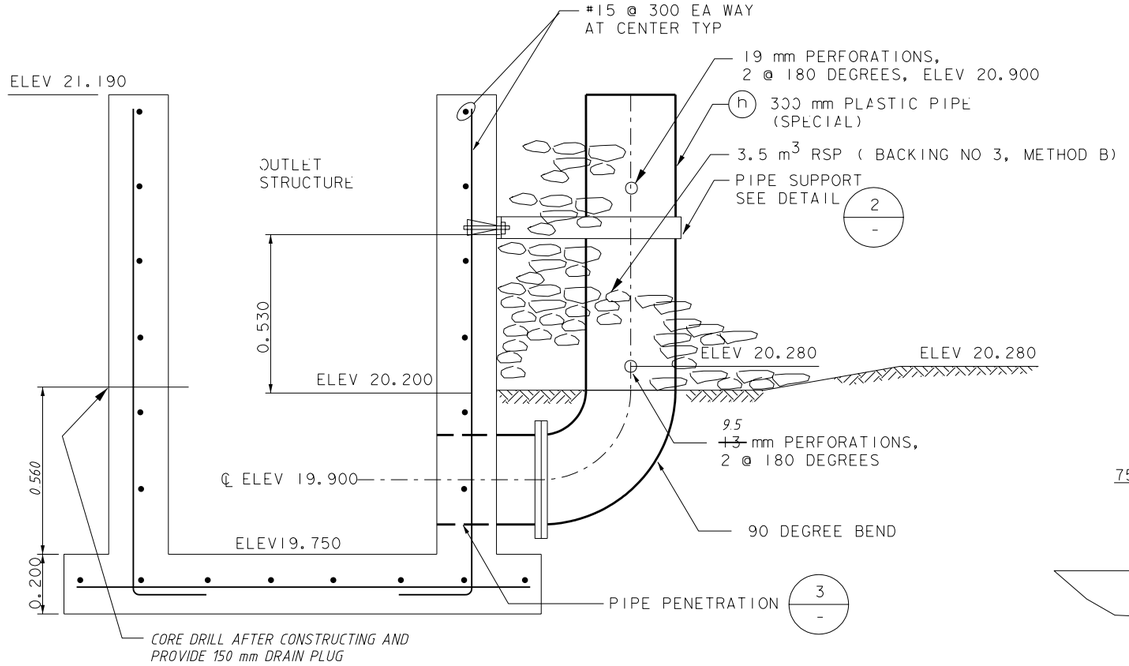

SECTION (B)

SCALE: 1:10

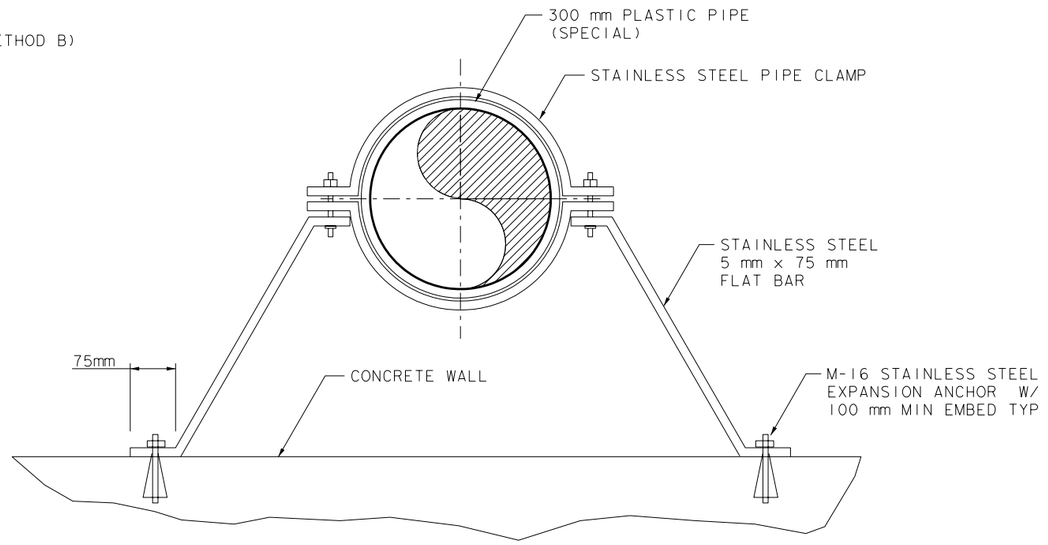

PIPE SUPPORT (2)

SCALE: 1:5

AS BUILT

DRAINAGE DETAILS

SCALE AS NOTED

ALL DIMENSIONS ARE IN METERS UNLESS OTHERWISE SHOWN

D-8

DATE	REVISED BY
5/98	DATE REVISED

CALCULATED/ DESIGNED BY	CF
CHECKED BY	DR 5/98

DESIGN OVERSIGHT
REFUGIO DOMINGUEZ

STATE OF CALIFORNIA - DEPARTMENT OF TRANSPORTATION

Caltrans

$DATE$ $TIME$ $FILE$

FOR REDUCED PLANS ORIGINAL SCALE IN MILLIMETERS 0 20 40 60 80

USERNAME => $$$$$$USER$$$$$$
DGN FILE => 278D6

CU 07279

EA 191101

DIST	COUNTY	ROUTE	KILOMETER POST TOTAL PROJECT	SHEET NO.	TOTAL SHEETS
07	LA	5,605	7.5, 10.9		

REGISTERED CIVIL ENGINEER DATE

PLANS APPROVAL DATE

X

REGISTERED PROFESSIONAL ENGINEER — DOUGLAS B. ROBISON — No. 37109 — Exp. 06-30-00 — CIVIL — STATE OF CALIFORNIA

BROWN AND CALDWELL
16735 VON KARMAN
IRVINE, CA 92606

The State of California or its officers or agents shall not be responsible for the accuracy or completeness of electronic copies of this plan sheet.

	DATE	REVISED BY
CALCULATED/ DESIGNED BY	CF	5/98
CHECKED BY	DR	5/98

DESIGN OVERSIGHT
REFUGIO DOMINGUEZ

STATE OF CALIFORNIA - DEPARTMENT OF TRANSPORTATION
Caltrans

$DATE$ $TIME$ $FILE$

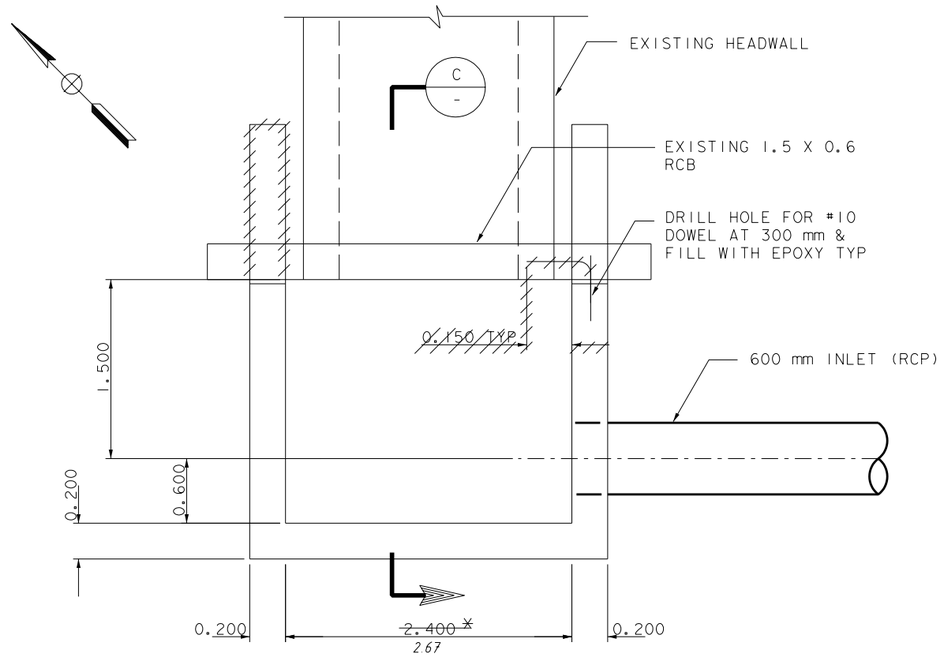

INLET STRUCTURE 1

2 / -

DRAINAGE SYSTEM NO 1 (a)

SCALE: 1:25

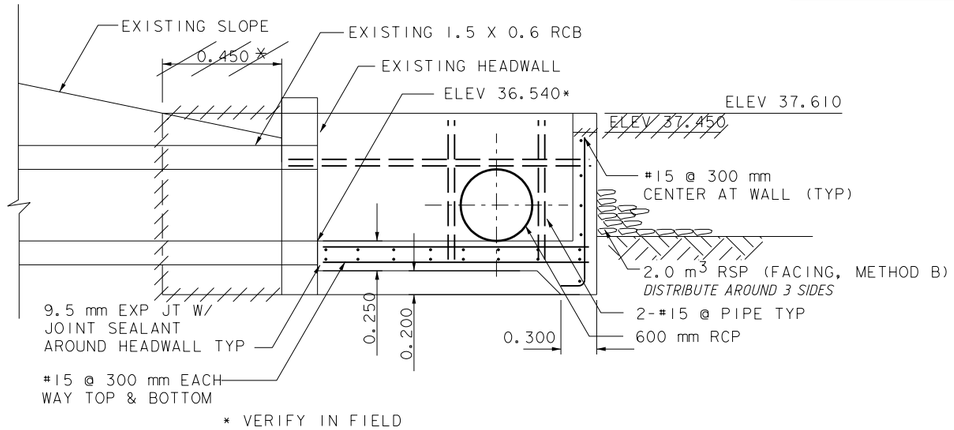

* VERIFY IN FIELD

SECTION

C / -

SCALE: 1:25

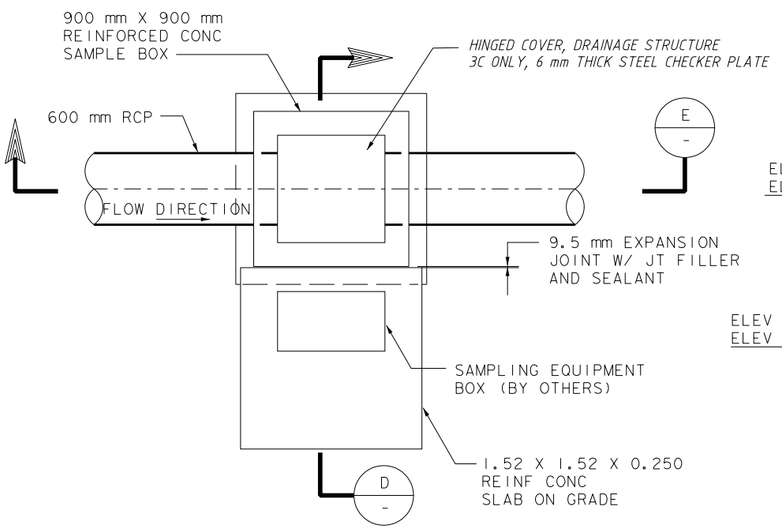

INLET SAMPLE BOX

2 / -

DRAINAGE SYSTEM NO 1 (c) 3 (c)

SCALE: 1:25

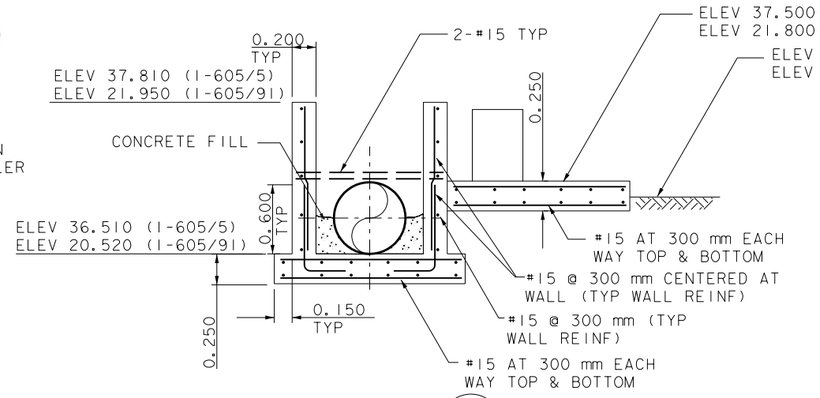

SECTION

D / -

SCALE: 1:25

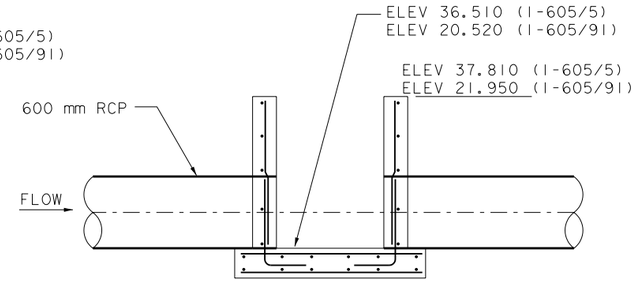

SECTION

E / -

SCALE: 1:25

AS BUILT

DRAINAGE DETAILS

SCALE AS NOTED

ALL DIMENSIONS ARE IN METERS UNLESS OTHERWISE SHOWN

D-9

FOR REDUCED PLANS ORIGINAL SCALE IN MILLIMETERS 0 20 40 60 80

USERNAME => $$$$$USER$$$$$
DGN FILE => 278D7

CU 07279

EA 191101

DIST	COUNTY	ROUTE	KILOMETER POST TOTAL PROJECT	SHEET NO.	TOTAL SHEETS
07	LA	5, 605	7.5, 10.9		

REGISTERED CIVIL ENGINEER DATE

PLANS APPROVAL DATE

X

REGISTERED PROFESSIONAL ENGINEER — DOUGLAS B. ROBISON — No. 37109 — Exp. 06-30-00 — CIVIL — STATE OF CALIFORNIA

BROWN AND CALDWELL
16735 VON KARMAN
IRVINE, CA 92606

The State of California or its officers or agents shall not be responsible for the accuracy or completeness of electronic copies of this plan sheet.

Caltrans Metric

DESIGN OVERSIGHT	CALCULATED/ DESIGNED BY	CF	DATE 5/98	REVISED BY
REFUGIO DOMINGUEZ	CHECKED BY	DR	5/98	DATE REVISED

STATE OF CALIFORNIA - DEPARTMENT OF TRANSPORTATION

Caltrans

$DATE$ $TIME$ $FILE$

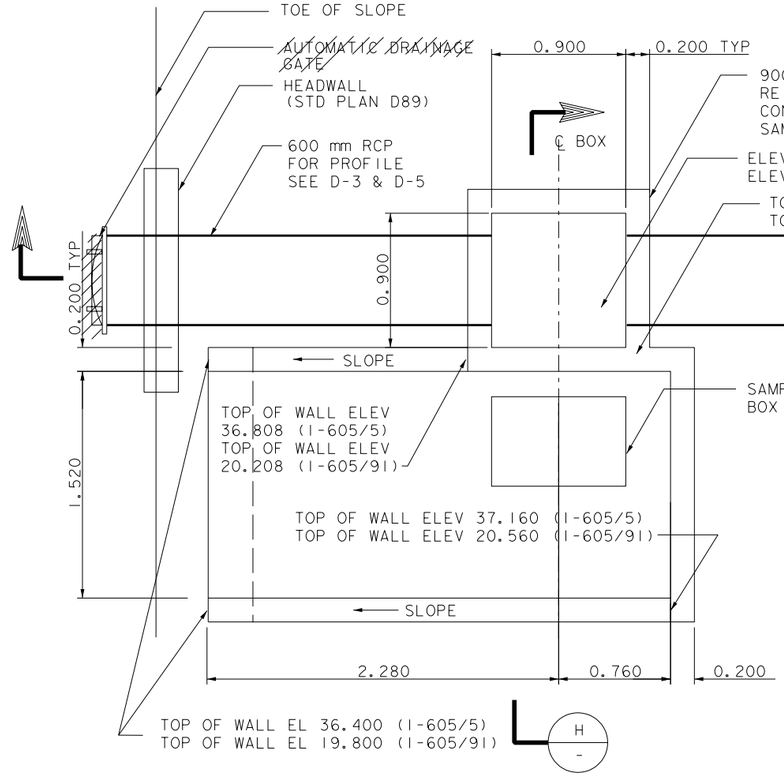

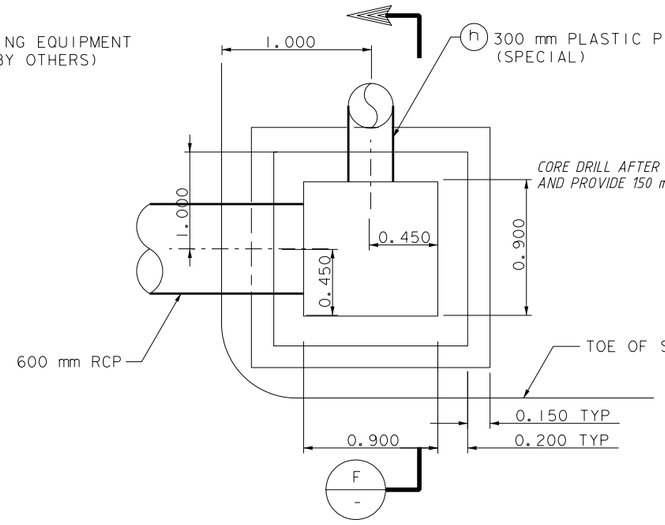

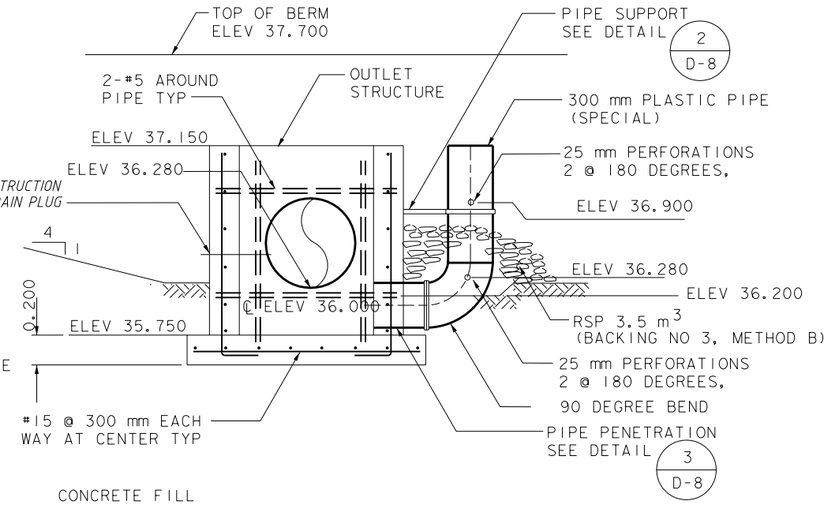

OUTLET SAMPLE BOX

DRAINAGE SYSTEM NO 2 (C) 4 (C)

SCALE: 1:20

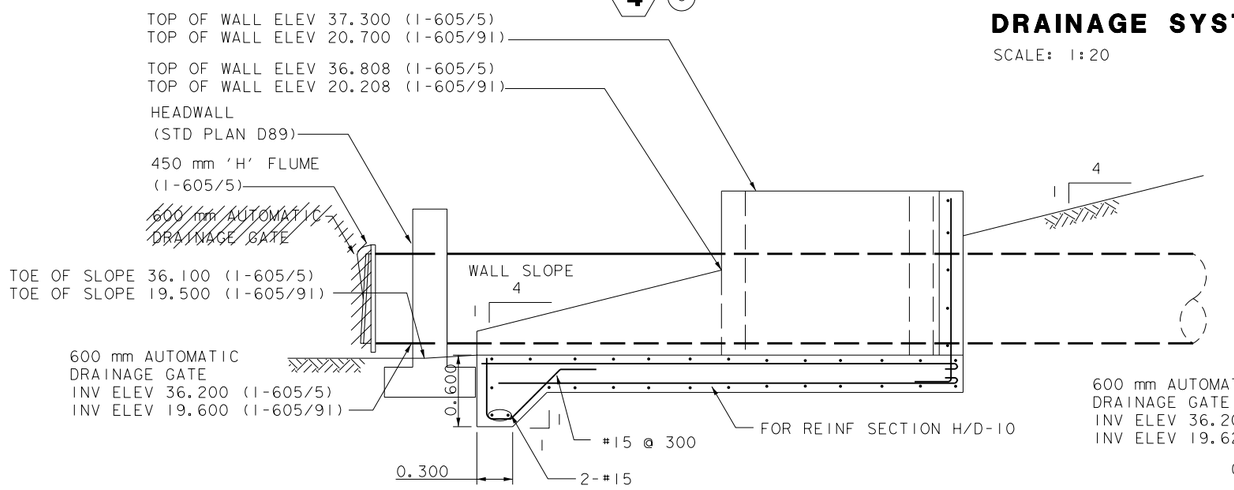

SECTION G

SCALE: 1:20

OUTLET STRUCTURE PLAN

DRAINAGE SYSTEM NO 2 (a)

SCALE: 1:20

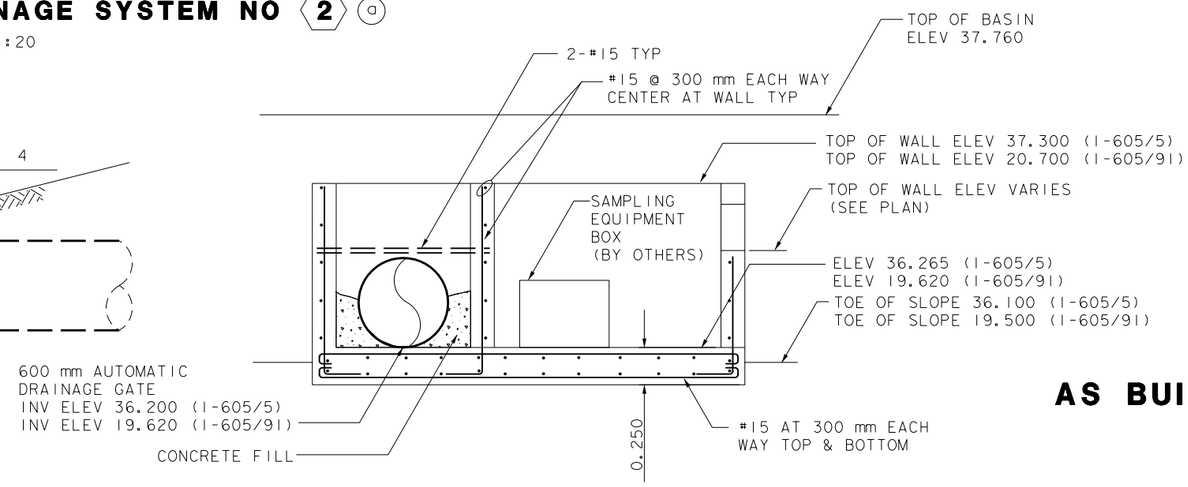

SECTION F

SCALE: 1:20

SECTION H

SCALE: 1:20

AS BUILT

DRAINAGE DETAILS

SCALE AS NOTED

ALL DIMENSIONS ARE IN METERS UNLESS OTHERWISE SHOWN

D-10

FOR REDUCED PLANS ORIGINAL SCALE IN MILLIMETERS 0 20 40 60 80

USERNAME => $$$$$$USER$$$$$$
DGN FILE => $$$$$$$$$$DGNSPEC$$$$$$$$$$

CU 07279

EA 191101

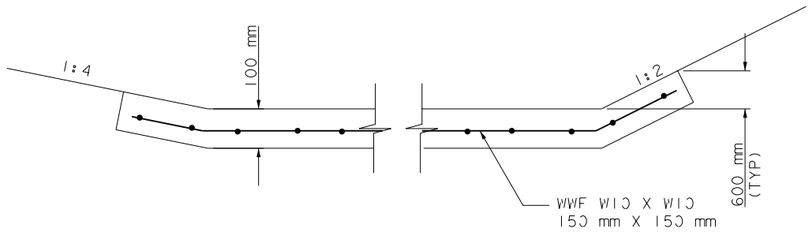

CONCRETE (BASIN LINING)

NOT TO SCALE

DRAINAGE SYSTEM NO 5 (a)

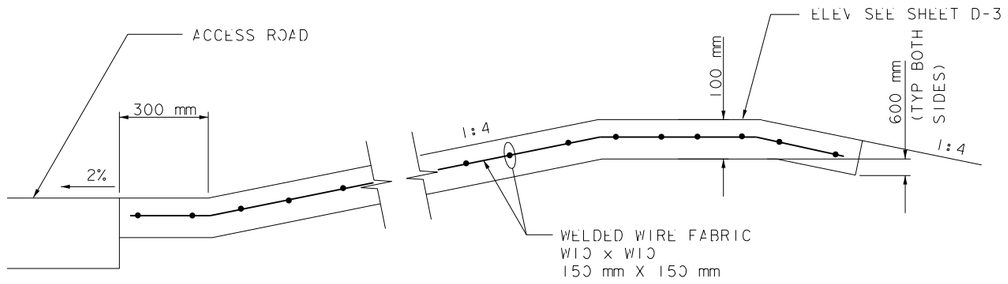

CONCRETE (BASIN LINING)

NOT TO SCALE

DRAINAGE SYSTEM NO 6 (a)

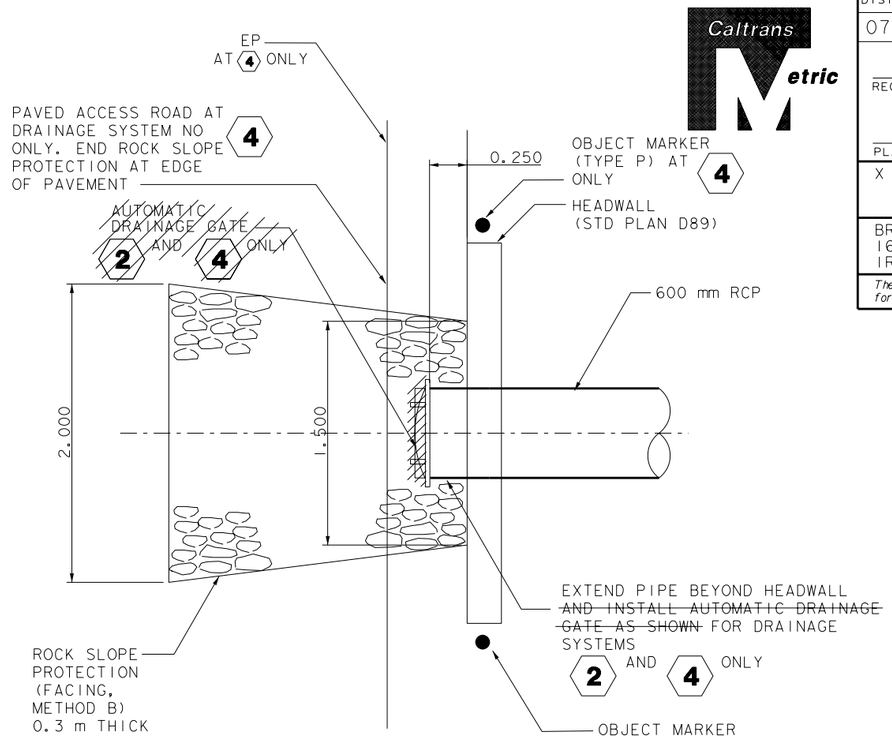

BASIN INLET/OUTLET

DRAINAGE SYSTEM NO

SCALE: 1:20

- 1 (d) (e) (f)
- 2 (d) (e) (f) (g)
- 3 (d) (e) (f)
- 4 (d) (e) (f) (g)

Caltrans Metric

DIST	COUNTY	ROUTE	KILOMETER POST TOTAL PROJECT	SHEET NO.	TOTAL SHEETS
07	LA	5,605	7.5, 10.9		

REGISTERED CIVIL ENGINEER DATE

REGISTERED PROFESSIONAL ENGINEER — DOUGLAS B. ROBISON — No. 37109 — Exp. 06-30-00 — CIVIL — STATE OF CALIFORNIA

PLANS APPROVAL DATE

X

BROWN AND CALDWELL
16735 VON KARMAN
IRVINE, CA 92606

The State of California or its officers or agents shall not be responsible for the accuracy or completeness of electronic copies of this plan sheet.

DATE	REVISED BY
5/98	DATE REVISED

CALCULATED/DESIGNED BY CF
CHECKED BY DR 5/98

DESIGN OVERSIGHT
REFUGIO DOMINGUEZ

STATE OF CALIFORNIA - DEPARTMENT OF TRANSPORTATION
Caltrans

$DATE$ $TIME$ $FILE$

AS BUILT

DRAINAGE DETAILS

SCALE AS NOTED

ALL DIMENSIONS ARE IN METERS UNLESS OTHERWISE SHOWN

D-11

FOR REDUCED PLANS ORIGINAL SCALE IN MILLIMETERS 0 20 40 60 80

USERNAME => $$$$$$USER$$$$$$
DGN FILE => 278D9

CU 07279

EA 191101

DIST	COUNTY	ROUTE	KILOMETER POST TOTAL PROJECT	SHEET NO.	TOTAL SHEETS
07	LA	5,605	7.5, 10.9		

REGISTERED CIVIL ENGINEER DATE

REGISTERED PROFESSIONAL ENGINEER — DOUGLAS B. ROBISON — No. 37109 — Exp. 06-30-00 — CIVIL — STATE OF CALIFORNIA

PLANS APPROVAL DATE

X

BROWN AND CALDWELL
16735 VON KARMAN
IRVINE, CA 92606

The State of California or its officers or agents shall not be responsible for the accuracy or completeness of electronic copies of this plan sheet.

CALCULATED/ DESIGNED BY | CF | DATE 5/98 | REVISED BY
CHECKED BY | DR | 5/98 | DATE REVISED

DESIGN OVERSIGHT
REFUGIO DOMINGUEZ

STATE OF CALIFORNIA - DEPARTMENT OF TRANSPORTATION
Caltrans

$DATES$ $TIME$ $FILE$

DRAINAGE QUANTITIES

DRAINAGE SYSTEM NO.	DRAINAGE UNIT	MINOR CONCRETE (MINOR STRUCTURE)	MISC IRON AND STEEL	CONCRETE (BASIN LINING)	DRAINAGE INLET	INLET GRATE (N) *	ROCK SLOPE PROTECTION (FACING, METHOD B)	ROCK SLOPE PROTECTION (BACKING NO 3, METHOD B)	600 mm REINFORCED CONCRETE PIPE	PLASTIC PIPE (SPECIAL)	300 mm CORRUGATED STEEL PIPE (2.01 mm THICK)	PIPE JOINT CLASSIFICATION	HEIGHT OF INLET "H"	MAXIMUM COVER	DESCRIPTION	STATION	DRAINAGE PLAN SHEET NO.	DRAINAGE SYSTEM NO.	DRAINAGE UNIT
		m3	kg	m3	EA	EA	m3	m3	m	m	m		m	m					
1	a	3.90					2.0								INLET STRUCTURE W/RSP		D-2	1	a
	b								9			WTJ		1.50	600 mm RCP		D-2		b
	c	2.40													INLET SAMPLE BOX		D-1		c
	d								16.5			WTJ		1.50			D-1		d
	e	0.90													SINGLE HEADWALL (STD D89)		D-1		e
	f						1.2								ROCK SLOPE PROTECTION		D-1		f
2	a	1.80													OUTLET STRUCTURE		D-1	2	a
	b								10			WTJ		1.5			D-1		b
	c	4.50													OUTLET SAMPLE BOX		D-1		c
	d								2			WTJ		1.0			D-1		d
	e	0.90													SINGLE HEADWALL (STD D89)		D-1		e
	f						1.2										D-1		f
	g														600mm AUTOMATIC DRAINAGE GATE		D-1		g
	h		100					3.5		1.5					PLASTIC PIPE & SUPPORT		D-1		h
3	a										88	WTJ		1.0			D-3	3	a
	b								6			WTJ		1.0			D-3		b
	c	2.70													INLET SAMPLE BOX		D-3		c
	d								8			WTJ		1.0			D-3		d
	e	0.90													SINGLE HEADWALL (STD D89)		D-3		e
	f						1.2								RSP		D-3		f
	g		107		1	1							0.8		PIPE INLET TYPE GMP		D-4		g
	h		107		1	1							1.3		PIPE INLET TYPE GMP		D-3		h
	i		107		1	1							0.8		PIPE INLET TYPE GMP		D-3		i
	j										2.0	WTJ		1.0			D-3		j
	k										2.0	WTJ		1.0			D-4		k
4	a	1.80													OUTLET STRUCTURE		D-3	4	a
	b								12			WTJ		2.0			D-3		b
	c	4.50													OUTLET SAMPLE BOX		D-3		c
	d								2			WTJ		1.0			D-3		d
	e	0.90													SINGLE HEADWALL (STD D89)		D-3		e
	f						0.5										D-3		f
	g														600mm AUTOMATIC DRAINAGE GATE		D-3		g
	h		100					3.5		2.0					PLASTIC PIPE & SUPPORT		D-3		h
5	a			72											CONCRETE (BASIN LINING)		D-1	5	a
6	a			4.5											CONCRETE (BASIN LINING)		D-3	6	a
SHEET TOTAL		24.8	521	76.5	3	3	6.1	7.0	65.5	3.5	92								

(N) * NOT A SEPARATE PAY ITEM
FOR INFORMATION ONLY

WTJ=WATER TIGHT JOINT

AS BUILT

DRAINAGE QUANTITIES

D-12

FOR REDUCED PLANS
ORIGINAL SCALE IN MILLIMETERS 0 20 40 60 80

USERNAME => $$$$$$USER$$$$$$
DGN FILE => 278D11

CU 07279

EA 191101

DIST	COUNTY	ROUTE	KILOMETER POST TOTAL PROJECT	SHEET NO.	TOTAL SHEETS
07	LA	5,605	7.5, 10.9		

REGISTERED CIVIL ENGINEER DATE

PLANS APPROVAL DATE

X

REGISTERED PROFESSIONAL ENGINEER
DOUGLAS B. ROBISON
No. 37109
Exp. 06-30-00
CIVIL
STATE OF CALIFORNIA

BROWN AND CALDWELL
16735 VON KARMAN
IRVINE, CA 92606

The State of California or its officers or agents shall not be responsible for the accuracy or completeness of electronic copies of this plan sheet.

Caltrans Metric

ROADWAY ITEMS

LOCATION OF CONSTRUCTION	DESCRIPTION	ASPHALT CONCRETE (TYPE B)	CLASS 2 AGGREGATE BASE	TEMPORARY RAILING (TYPE K)	ROADWAY EXCAVATION	IMPORTED BORROW
		TONN	m^3	m	m^3	m^3
①	I5/I605	57	71	65	I00	I650
②	I605/SR9I	58	72	50	780	370
TOTAL		I15	I43	I15	880	2020

DESIGN OVERSIGHT	CALCULATED/ DESIGNED BY	CF	DATE 5/98	REVISED BY
REFUGIO DOMINGUEZ	CHECKED BY	DR	5/98	DATE REVISED

STATE OF CALIFORNIA - DEPARTMENT OF TRANSPORTATION
Caltrans

$DATE$ $TIME$ $FILE$

ALL DIMENSIONS ARE IN METERS UNLESS OTHERWISE SHOWN

AS BUILT

SUMMARY OF QUANTITIES

Q-1

FOR REDUCED PLANS ORIGINAL SCALE IN MILLIMETERS 0 20 40 60 80

USERNAME => $$$$$$USER$$$$$$
DGN FILE => 27801

CU 07279

EA 791101

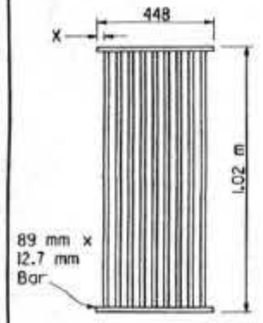

TYPE 450-9

35 mm Clear spacing. Use within the roadbed on highways where bicycles and pedestrians are excluded.

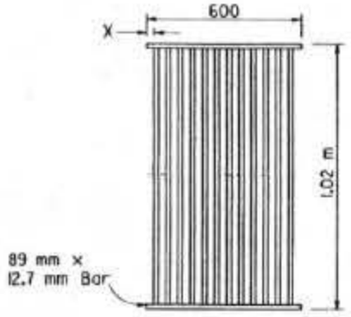

TYPE 600-9

51mm Clear spacing. Use in locations off the roadbed on all types of highways.

TYPE 600-12

35 mm Clear spacing. Use within the roadbed on highways where bicycles and pedestrians are excluded.

RECTANGULAR GRATE DETAILS

(See table below)

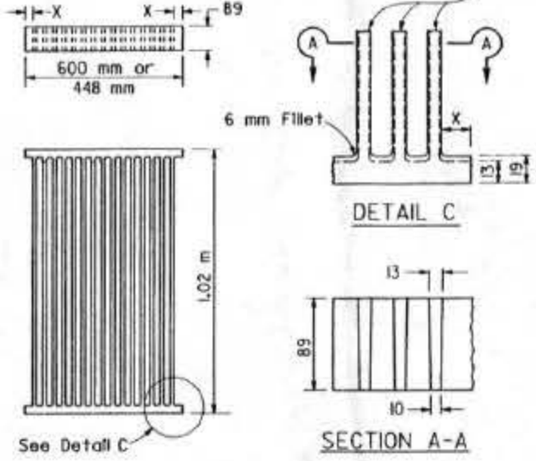

ALTERNATIVE CAST NODULAR IRON GRATE OR CAST STEEL GRATE

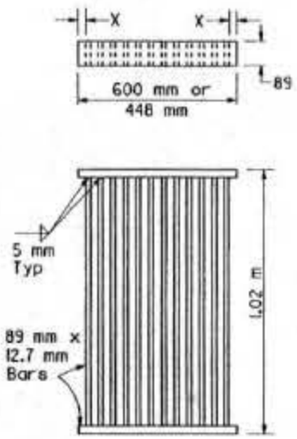

ALTERNATIVE WELDED GRATE

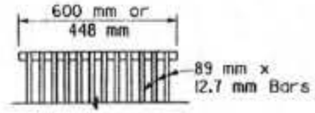

CAST END BLOCK

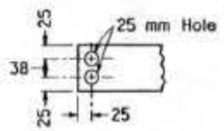

END OF BAR

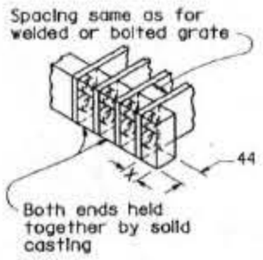

ALTERNATIVE CAST NODULAR IRON OR CAST STEEL END BLOCK GRATE

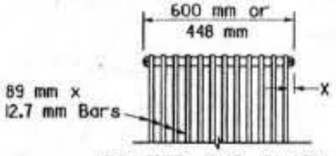

BOLTED END BLOCK

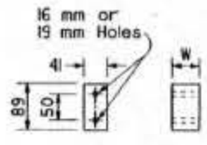

BAR SPACER

BOLTING DETAIL

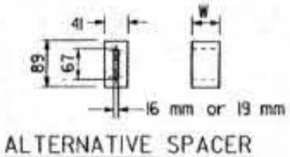

ALTERNATIVE SPACER

35 mm or 50 mm

ALTERNATIVE BOLTED GRATE

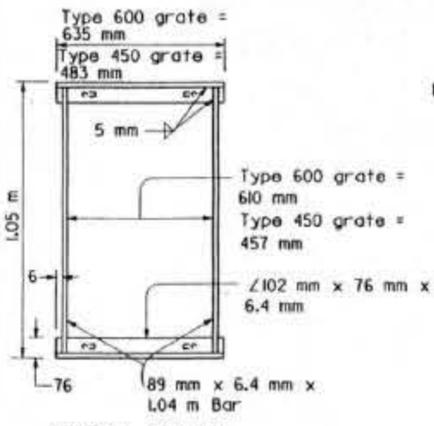

TYPICAL FRAME

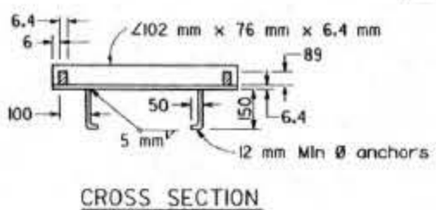

CROSS SECTION

(Thru frame)

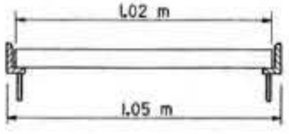

LONGITUDINAL SECTION

(Thru frame and grate)

RECTANGULAR FRAME DETAILS

(For all rectangular grates)

GRATE BAR SPACING TABLE

TYPE	NO. OF BARS	CLEAR BAR SPACING (mm)	X (mm)
450-9	9	35	27
600-9	9	51	40
600-12	12	35	32

INLET TYPE	COVER TYPE	MASS (kg)
OS	PLATE	79
OL-2.1	PLATE	77
OL-3.0	PLATE	77
OL-4.3	PLATE	77
OL-6.4	PLATE	77
OCP	PLATE	51
OCPI	PLATE	51
OCPI	REDWOOD	19
OMP	PLATE	80
OMPI	PLATE	80

INLET TYPE	GRATE TYPE	NO. OF GRATES	MASS (kg)
GDO	600-12	2	288
GOL-2.1	600-12	1	148
GOL-3.0	600-12	1	148
GO,G1,G2,G3,G4(TYPE 600)	600-9	1	119
	600-12	1	148
G4(TYPE 450),G5,G6	450-9	1	113
GT-1	450-9	2	226
GT-2	450-9	2	226
GT-3	600-12	2	296
GT-4	600-12	2	296
TRASH RACK			10

BASIS FOR MISC IRON & STEEL FINAL PAY MASSES FOR DRAINAGE INLETS

(See General Notes, No 8)

Caltrans Metric

DIST	COUNTY	ROUTE	KILOMETER POST TOTAL PROJECT	SHEET NO.	TOTAL SHEETS
07	LA	5,605	7.5/10.9	23	26

REGISTERED CIVIL ENGINEER

December 4, 1997

PLANS APPROVAL DATE

Glenn DeCou C34547 Exp. 9-30-99 CIVIL STATE OF CALIFORNIA

The State of California or its officers or agents shall not be responsible for the accuracy or completeness of electronic copies of this plan sheet.

To accompany plans dated 7-13-98

NOTES

1. Grate type numbers refer to approximate width of grate in millimeters and number of bars, respectively.
2. Contractor has the option of using cast nodular iron, cast steel, welded, bolted, or cast end block grate.
3. See Special Provisions for requirements pertaining to galvanizing or asphalt dipping of grates and frames.
4. Rounded top of bars optional on all grates.
5. Pipe inlets with a grate shall be placed so that bars parallel direction of principle surface flow.
6. Full penetration butt welds may be substituted for the fillet welds on all anchors.
7. Standard square, hexagon, round or equivalent headed anchors may be substituted for the right angle hooks on the anchors shown on this plan.
8. Grate and frame weights are based on welded grates (weights of face angles, steps, protection bars, etc. are not included).

STATE OF CALIFORNIA
DEPARTMENT OF TRANSPORTATION

GRATE DETAILS

NO SCALE

ALL DIMENSIONS ARE IN MILLIMETERS UNLESS OTHERWISE SHOWN

RSP D77A DATED DECEMBER 4, 1997 SUPERSEDES STANDARD PLAN D77A DATED JULY 1, 1997-PAGE 82 OF THE STANDARD PLANS BOOK DATED JULY 1997.

REVISED STANDARD PLAN RSP D77A

DIST	COUNTY	ROUTE	KILOMETER POST TOTAL PROJECT	SHEET NO.	TOTAL SHEETS
07	LA	5,605	7.5/10.9	24	26

REGISTERED CIVIL ENGINEER

December 4, 1997
PLANS APPROVAL DATE

Glenn DeCou
No. C34547
Exp. 9-30-99
CIVIL
STATE OF CALIFORNIA

The State of California or its officers or agents shall not be responsible for the accuracy or completeness of electronic copies of this plan sheet.

To accompany plans dated 7-13-98

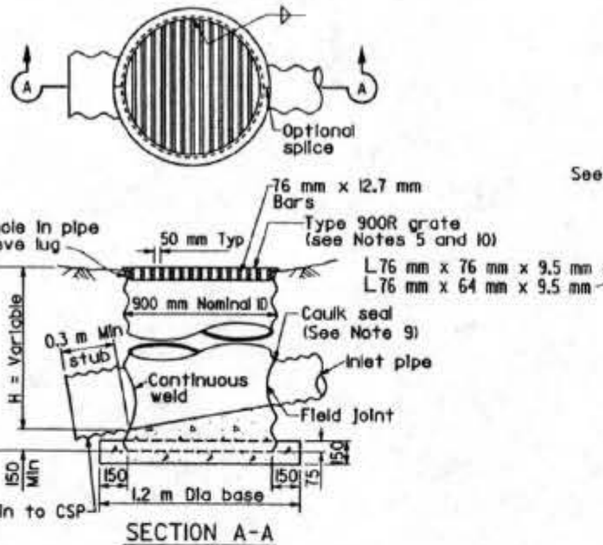

SECTION A-A

TYPE GMP

STEEL PIPE INLET WITH GRATE

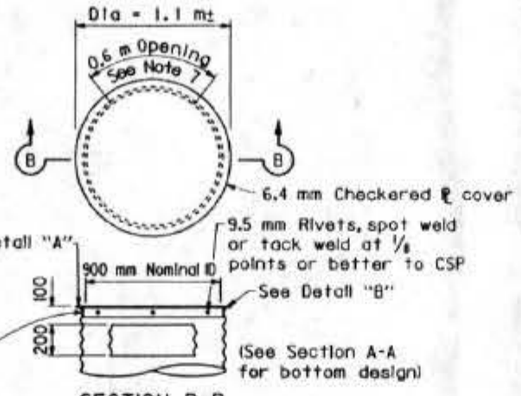

SECTION B-B

TYPE OMP or OMPI

STEEL PIPE INLET WITH SIDE OPENING AND STEEL COVER (See Note 6)

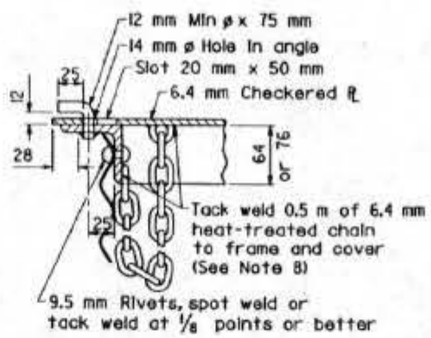

DETAIL "A"

NOTES

1. For Details of concrete pipe inlets, see New Standard Plan NSP D75B.
2. For details of ladder and steps and when ladder or steps are required, see Standard Plan NSP A75C.
3. Inlet pipes shall not protrude into basin.
4. Except for inlets used for junction boxes, basin floors shall have minimum slope of 1:4 from all directions toward outlet pipe, and a wood trowel finish.
5. See Standard Plans D77A and D77B for Grate and Frame Details and mass of Miscellaneous Iron and Steel.
6. Designation of Type OMPI pipe inlets on plans indicates trash racks are to be furnished and installed on all side openings. See New Standard Plan NSP D75C for trash rack details.
7. More than one side opening may be required. Location and number as ordered by the Engineer.
8. Chain to be provided when specified.
9. Caulk seal with pliable mixture of sand, portland cement, and emulsified asphalt (Mixture of 1 part portland cement, 3-5 parts sand, and 1½ parts SSI emulsified asphalt.)
10. Place pipe so bars of grate will be parallel with main surface flow.

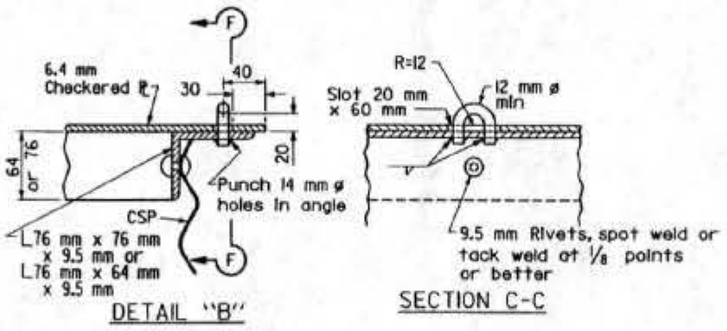

DETAIL "B"

SECTION C-C

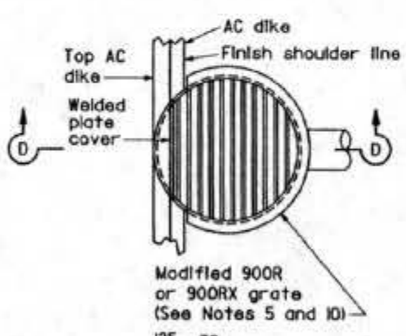

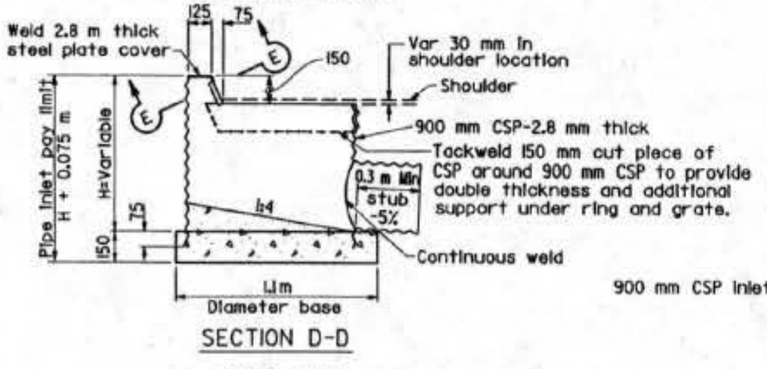

SECTION D-D

TYPE ODI

STEEL PIPE INLET WITH GRATE AND RAISED OPENING AT AC DIKE FLOWLINE

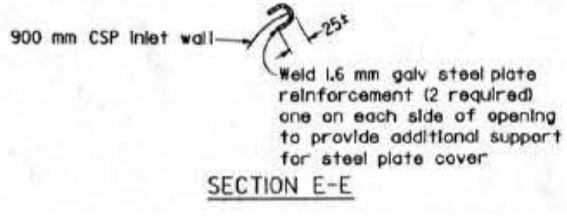

SECTION E-E

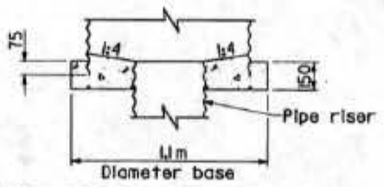

TYPE ODI BASE DETAIL FOR PIPE RISER CONNECTION

STATE OF CALIFORNIA
DEPARTMENT OF TRANSPORTATION

PIPE INLETS

NO SCALE

ALL DIMENSIONS ARE IN MILLIMETERS UNLESS OTHERWISE SHOWN

NSP D75A, NSP D75B AND NSP D75C DATED DECEMBER 4, 1997
SUPERSEDES STANDARD PLANS D75 DATED JULY 1, 1997-PAGE 81
OF THE STANDARD PLANS BOOK DATED JULY 1997.

NEW STANDARD PLAN NSP D75A

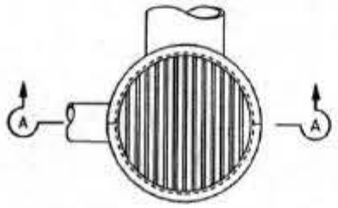

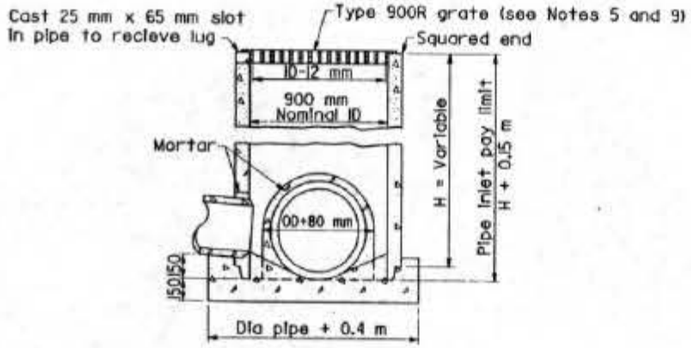

SECTION A-A

TYPE GCP

CONCRETE PIPE INLET WITH GRATE

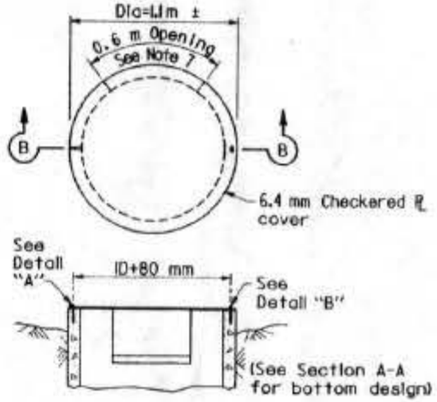

SECTION B-B

TYPE OCP or OCPI

CONCRETE PIPE INLET WITH STEEL COVER
(See Note 6)

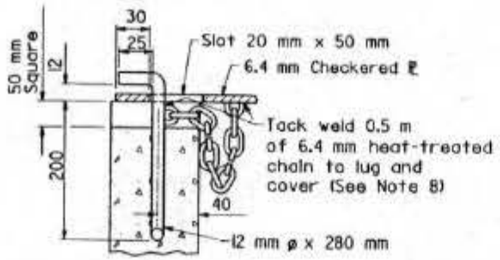

DETAIL "A"

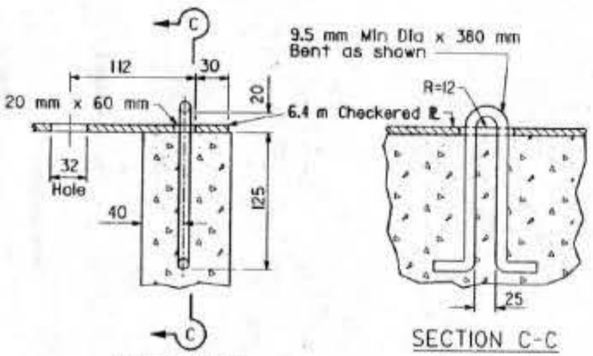

DETAIL "B"

SECTION C-C

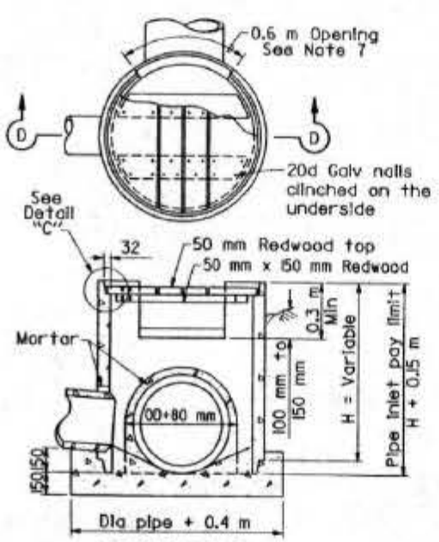

SECTION D-D

TYPE OCP or OCPI

CONCRETE PIPE INLET WITH REDWOOD COVER
(See Notes 6 and 10)

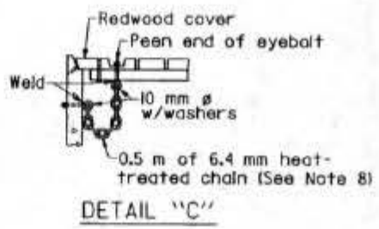

DETAIL "C"

Caltrans Metric

DIST	COUNTY	ROUTE	KILOMETER POST TOTAL PROJECT	SHEET NO.	TOTAL SHEETS
07	LA	5.605	7.5/10.9	25	26

REGISTERED CIVIL ENGINEER

December 4, 1997
PLANS APPROVAL DATE

Glenn DeCou
No. C34547
Exp. 9-30-99
CIVIL
REGISTERED PROFESSIONAL ENGINEER
STATE OF CALIFORNIA

The State of California or its officers or agents shall not be responsible for the accuracy or completeness of electronic copies of this plan sheet.

To accompany plans dated 7-13-98

NOTES

1. For details of steel pipe inlets, see New Standard Plan NSP D75A.
2. For details of ladder and steps and when ladder or steps are required, see New Standard Plan NSP D75C.
3. Inlet pipes shall not protrude into basin.
4. Except for inlets used for junction boxes, basin floors shall have minimum slope of 1:4 from all directions toward outlet pipe, and a wood trowel finish.
5. See Standard Plans D77A and D77B for Grate and Frame Details and Weights of Miscellaneous Iron and Steel.
6. Designation of Type OCPI pipe inlets on plans indicates trash racks are to be furnished and installed on all side openings. See Standard Plan NSP D75C for Trash rack details.
7. More than one side opening may be required. Location and number as ordered by the Engineer. Opening may be cast in pipe.
8. Chain to be provided when specified.
9. Place pipe so bars of grate will be parallel with main surface flow.
10. Redwood covers not to be used where there is a possibility of wheelloads. Use Type GCP inlet where there is a possibility of wheelloads.

STATE OF CALIFORNIA
DEPARTMENT OF TRANSPORTATION

PIPE INLETS

NO SCALE

ALL DIMENSIONS ARE IN
MILLIMETERS UNLESS OTHERWISE SHOWN

NSP D75A, NSP D75B AND NSP D75C DATED DECEMBER 4, 1997
SUPERSEDES STANDARD PLANS D75 DATED JULY 1, 1997-PAGE 81
OF THE STANDARD PLANS BOOK DATED JULY 1997.

NEW STANDARD PLAN NSP D75B

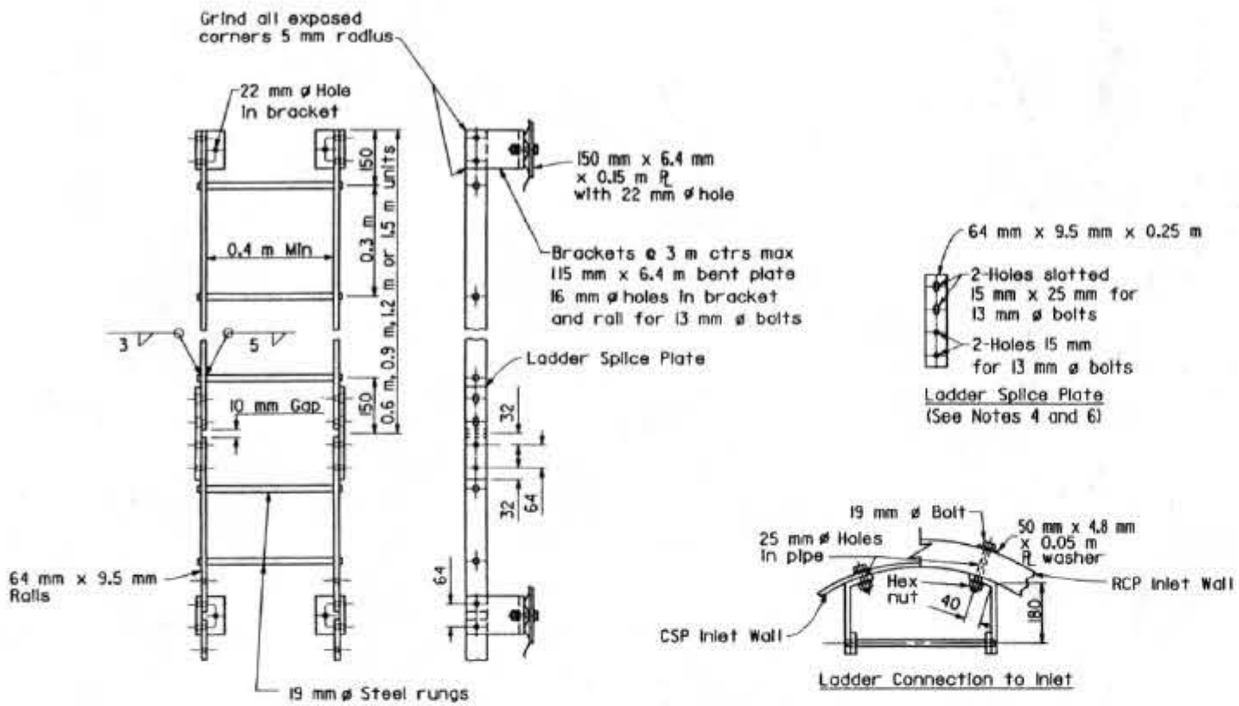

Ladder Splice Plate
(See Notes 4 and 6)

Ladder Connection to Inlet

LADDER DETAILS

See Notes 1, 2, 3, 4 and 6

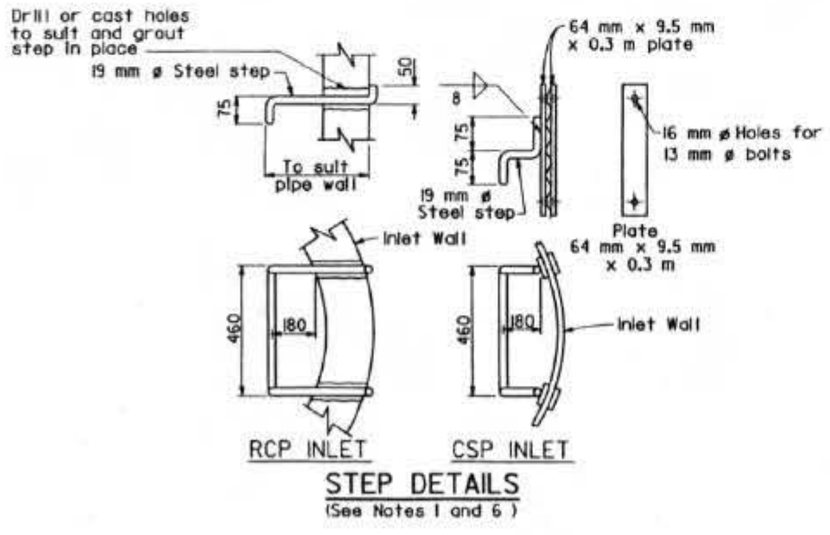

RCP INLET CSP INLET

STEP DETAILS

(See Notes 1 and 6)

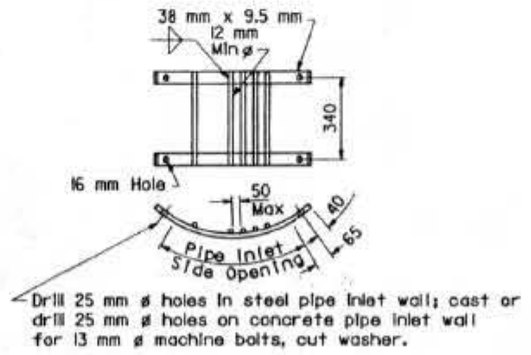

TRASH RACK DETAILS

(See Notes 5 and 6)

Caltrans Metric

DIST	COUNTY	ROUTE	TOTAL PROJECT	NO.	SHEETS
07	LA	5,605	7.5/10.9	26	26

REGISTERED CIVIL ENGINEER

December 4, 1997
PLANS APPROVAL DATE

Glenn DeCou No. C34547 Exp. 9-30-99 CIVIL STATE OF CALIFORNIA

The State of California or its officers or agents shall not be responsible for the accuracy or completeness of electronic copies of this plan sheet.

To accompany plans dated 7-13-98

NOTES

1. Ladders and Steps - None required where "H" dimension of pipe inlet is less than 0.75 m. Where "H" is 0.75 m or more, install steps or ladder with lowest rung not more than 0.3 m above the floor and highest rung not more than 0.3 m below top of inlet. The distance between steps or rungs shall not exceed 0.3 m and shall be uniform throughout the length of the wall. Place steps or ladder in the wall without an opening.
2. Ladder may be constructed in one length at contractor's option on RCP inlet.
3. On CSP inlet, connect ladder splice plate so joint can compress 10 mm.
4. Ladder splice plate to be connected with 13 mm ø bolts with double nuts.
5. Trash racks used on Type OCPI and OMPI inlets. Trash racks required for pumping installations.
6. All hardware to be galvanized after fabrication. See Standard Specifications or Special Provisions.

STATE OF CALIFORNIA
DEPARTMENT OF TRANSPORTATION

PIPE INLETS LADDER, STEP AND TRASH RACK DETAILS

NO SCALE

ALL DIMENSIONS ARE IN MILLIMETERS UNLESS OTHERWISE SHOWN

NSP D75A, NSP D75B AND NSP D75C DATED DECEMBER 4, 1997
SUPERSEDES STANDARD PLANS D75 DATED JULY 1, 1997-PAGE 81
OF THE STANDARD PLANS BOOK DATED JULY 1997.

NEW STANDARD PLAN NSP D75C