DIST	COUNTY	ROUTE	KILOMETER POST TOTAL PROJECT	SHEET NO.	TOTAL SHEETS
11	SD	5	62.04	1	

STATE OF CALIFORNIA

DEPARTMENT OF TRANSPORTATION

PROJECT PLANS FOR CONSTRUCTION ADJACENT TO

STATE HIGHWAY

IN SAN DIEGO COUNTY
IN ENCINITAS ON ROUTE 5
AT MANCHESTER AVENUE NB OFF RAMP

To be supplemented by Standard Plans dated July, 1997

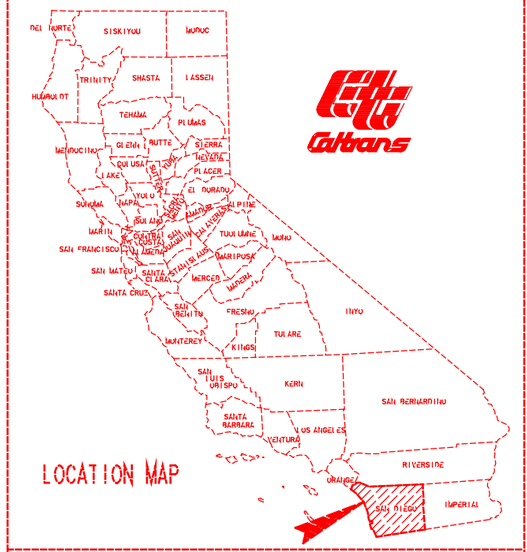

The State of California or its officers or agents shall not be responsible for the accuracy or completeness of electronic copies of this plan sheet.

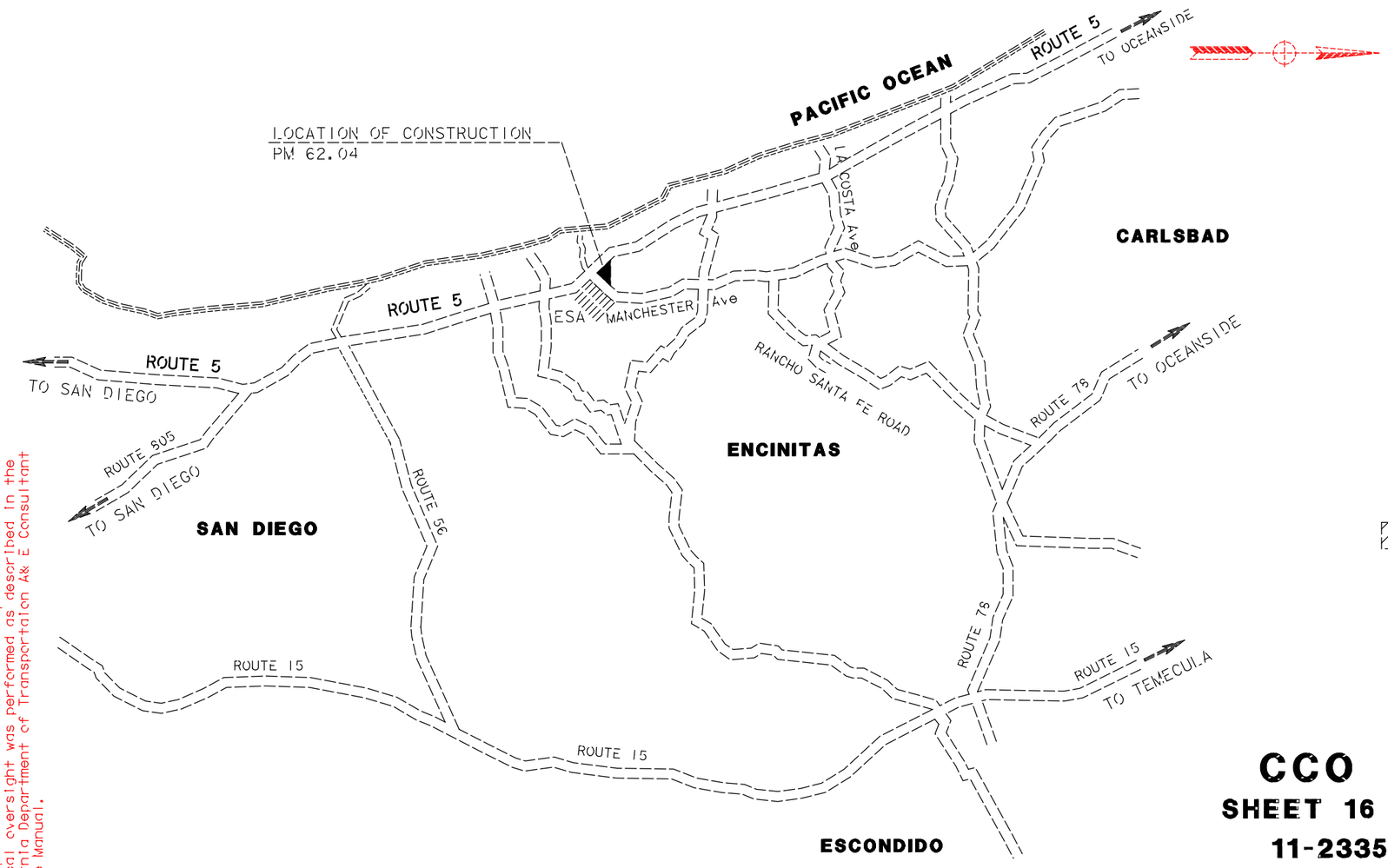

AS-CONSTRUCTED PLANS

The changes reflected in these AS-CONSTRUCTED PLANS were obtained by conducting a review of the site by RBF field surveyors in June of 2000. The field survey was limited to a review of the surface features and a review of the accessible invert elevations of drainage structures.

RBF is not responsible for the accuracy or completeness of electronic copies of this plan sheet.

Date of AS-CONSTRUCTED PLANS preparation. June 2000

Caltrans Metric

LEGEND

ESA ENVIRONMENTALLY SENSITIVE AREA

CCO 23
SHEET 16 OF 39
11-233504
LOCATION 4
MANCHESTER

Approved as to the impact on State facilities and conformance with applicable State standards and practices and that technical oversight was performed as described in the California Department of Transportation A&E Consultant Service Manual.

The Contractor shall possess the Class (or Classes) of license as specified in the "Notice to Contractors".

NO SCALE

Project Engineer Date
Registered Civil Engineer

REGISTERED PROFESSIONAL ENGINEER A.M. WALKER No. 57716 Exp. 12-31-01 CIVIL STATE OF CALIFORNIA

APRIL 5, 1999
Plans Approval Date

ROBERT BEIN, WILLIAM FROST & ASSOCIATES
14725 ALTON PARKWAY
IRVINE, CA 92618

Contract No. 11-233504

$DATE$	$TIME$	$FILE$
PROJECT ENGINEER	DESIGN OVERSIGHT APPROVAL	REGISTRATION NO. / DATE
A. M. WALKER	PRINTED NAME / SIGNATURE	RCE 47996
	CID TESORO	

LAST REVISION DATE PLOTTED => $DATE
04-04-99 TIME PLOTTED => $TIME

FORM DC-OE-93-PF (REV. 3/93)

FOR REDUCED PLANS ORIGINAL SCALE IS IN MILLIMETERS 0 20 40 60 80

USERNAME => $USER
DGN FILE => $REQUEST

CU 11516 | EA 233501

DIST	COUNTY	ROUTE	KILOMETER POST TOTAL PROJECT	SHEET NO.	TOTAL SHEETS
11	SD	5	62.04	2	

ALL DIMENSIONS ARE IN MILLIMETERS UNLESS OTHERWISE SHOWN

Caltrans Metric

REGISTERED CIVIL ENGINEER

APRIL 5, 1999

PLANS APPROVAL DATE

REGISTERED PROFESSIONAL ENGINEER A.M. WALKER No. 57716 Exp. 12-31-01 CIVIL STATE OF CALIFORNIA

The State of California or its officers or agents shall not be responsible for the accuracy or completeness of electronic copies of this plan sheet.

ROBERT BEIN, WILLIAM FROST & ASSOCIATES
14725 ALTON PARKWAY
IRVINE, CA 92618

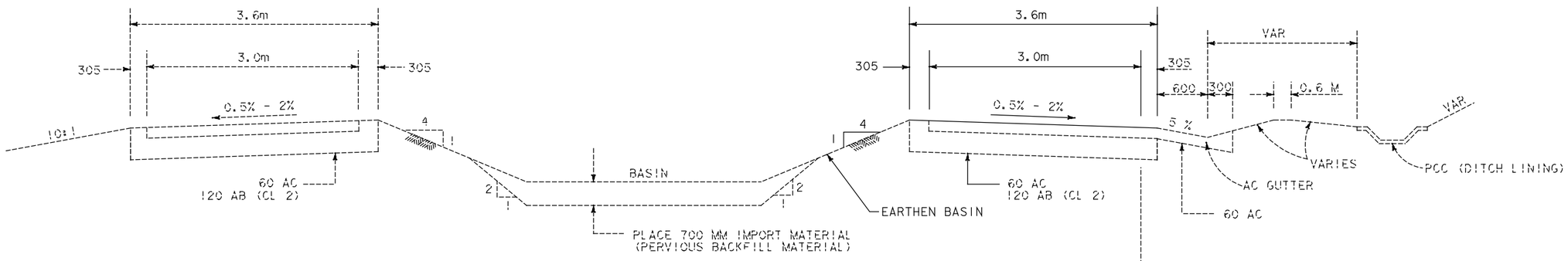

ACCESS ROAD

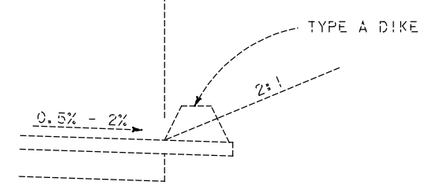

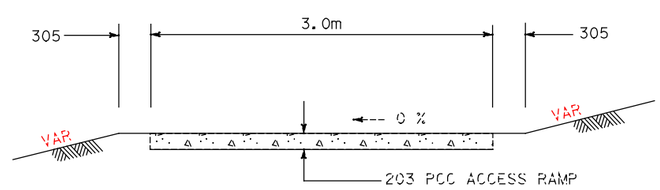

EARTH BASIN ACCESS RAMP

CCO 23
SHEET 17 OF 39
11-233504
LOCATION 4
MANCHESTER

AS-CONSTRUCTED PLANS

The changes reflected in these AS-CONSTRUCTED PLANS were obtained by conducting a review of the site by RBF field surveyors in June of 2000. The field survey was limited to a review of the surface features and a review of the accessible invert elevations of drainage structures.

RBF is not responsible for the accuracy or completeness of electronic copies of this plan sheet.

Date of AS-CONSTRUCTED PLANS preparation. June 2000

TYPICAL CROSS SECTION

NO SCALE

X-1

04-04-99

DESIGN OVERSIGHT
CID TESORO

STATE OF CALIFORNIA DEPARTMENT OF TRANSPORTATION
NPDES

CALCULATED/ DESIGNED BY	DATE 1/99	REVISED BY
AMW		
CHECKED BY	DATE 1/99	DATE REVISED
SMT		

Caltrans

$DATE$ $TIME$ $FILE$

FOR REDUCED PLANS ORIGINAL SCALE IN MILLIMETERS 0 20 40 60 80

USERNAME => $$$$$$$USER$$$$$$$
DGN FILE => $$$$$$$$$$$DGNSPEC$$$$$$$$$$$

CU 11516

EA 233501

FOR COMPLETE R/W AND ACCURATE ACCESS DATA, SEE R/W RECORD MAPS AT DISTRICT OFFICE

ABBREVIATIONS

WQM - WATER QUALITY MONITOR

LEGEND

- ESA - ENVIRONMENTALLY SENSITIVE AREA
- CONCRETE APRON, RAMP OR SPILLWAY
- ACCESS ROADWAY
- RSP
- 1 - DRAINAGE SYSTEM No.
- a - DRAINAGE UNIT
- DITCH OR SLOPE PAVING FLOWLINE, SLOPE OR GRADE TO DRAIN

ALL DIMENSIONS ARE IN METERS UNLESS OTHERWISE SHOWN

AS-CONSTRUCTED PLANS

The changes reflected in these AS-CONSTRUCTED PLANS were obtained by conducting a review of the site by RBF field surveyors in June of 2000. The field survey was limited to a review of the surface features and a review of the accessible invert elevations of drainage structures.

RBF is not responsible for the accuracy or completeness of electronic copies of this plan sheet.

Date of AS-CONSTRUCTED PLANS preparation. June 2000

Caltrans Metric

DIST	COUNTY	ROUTE	KILOMETER POST TOTAL PROJECT	SHEET NO.	TOTAL SHEETS
11	SD	5	62.04	3	

REGISTERED CIVIL ENGINEER

APRIL 5, 1999
PLANS APPROVAL DATE

The State of California or its officers or agents shall not be responsible for the accuracy or completeness of electronic copies of this plan sheet.

REGISTERED PROFESSIONAL ENGINEER A.M. WALKER No. 57716 Exp. 12-31-01 CIVIL STATE OF CALIFORNIA

ROBERT BEIN, WILLIAM FROST & ASSOCIATES
14725 ALTON PARKWAY
IRVINE, CA 92618

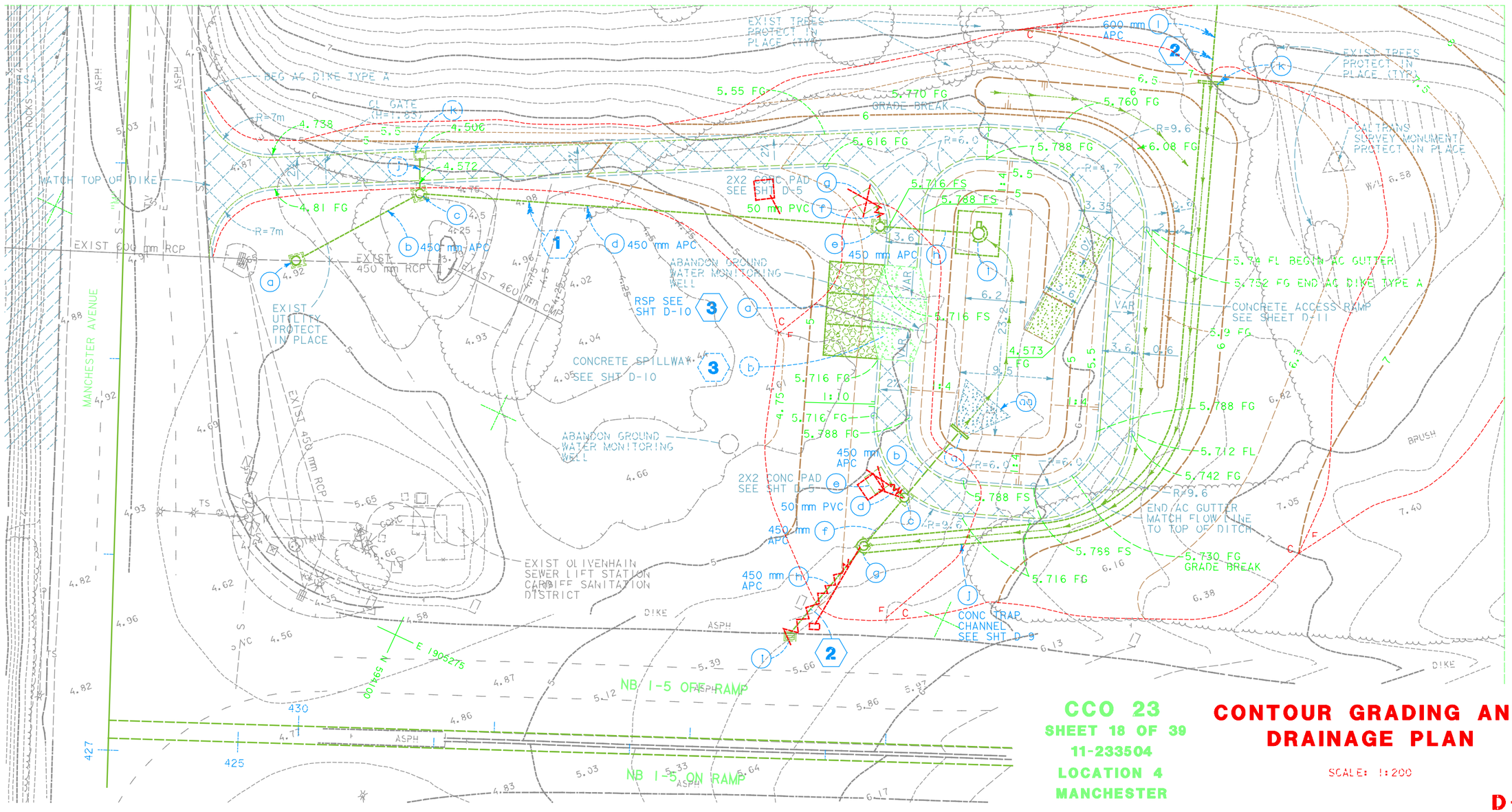

CCO 23
SHEET 18 OF 39
11-233504
LOCATION 4
MANCHESTER

CONTOUR GRADING AND DRAINAGE PLAN

SCALE: 1:200

D-1

04-04-99

CALCULATED/ DESIGNED BY	AMW	DATE 1/99	REVISED BY
CHECKED BY	MC	1/99	DATE REVISED

DESIGN OVERSIGHT: CID TESORO

DEPARTMENT OF TRANSPORTATION: NPDES

STATE OF CALIFORNIA: Caltrans

$DATE$ $TIME$ $FILE$

FOR REDUCED PLANS ORIGINAL SCALE IN MILLIMETERS 0 20 40 60 80

USERNAME => $$$$$$USER$$$$$$
DGN FILE => $$$$$$$$$$DGNSPEC$$$$$$$$$$

CU 11516 EA 233501

DIST	COUNTY	ROUTE	KILOMETER POST TOTAL PROJECT	SHEET NO.	TOTAL SHEETS
11	SD	5	62.04	4	

REGISTERED CIVIL ENGINEER

APRIL 5, 1999
PLANS APPROVAL DATE

REGISTERED PROFESSIONAL ENGINEER
A.M. WALKER
No. 57716
Exp. 12-31-01
CIVIL
STATE OF CALIFORNIA

The State of California or its officers or agents shall not be responsible for the accuracy or completeness of electronic copies of this plan sheet.

ROBERT BEIN, WILLIAM FROST & ASSOCIATES
14725 ALTON PARKWAY
IRVINE, CA 92618

ALL DIMENSIONS ARE IN METERS UNLESS OTHERWISE SHOWN

Caltrans Metric

FOR COMPLETE R/W AND ACCURATE ACCESS DATA, SEE R/W RECORD MAPS AT DISTRICT OFFICE

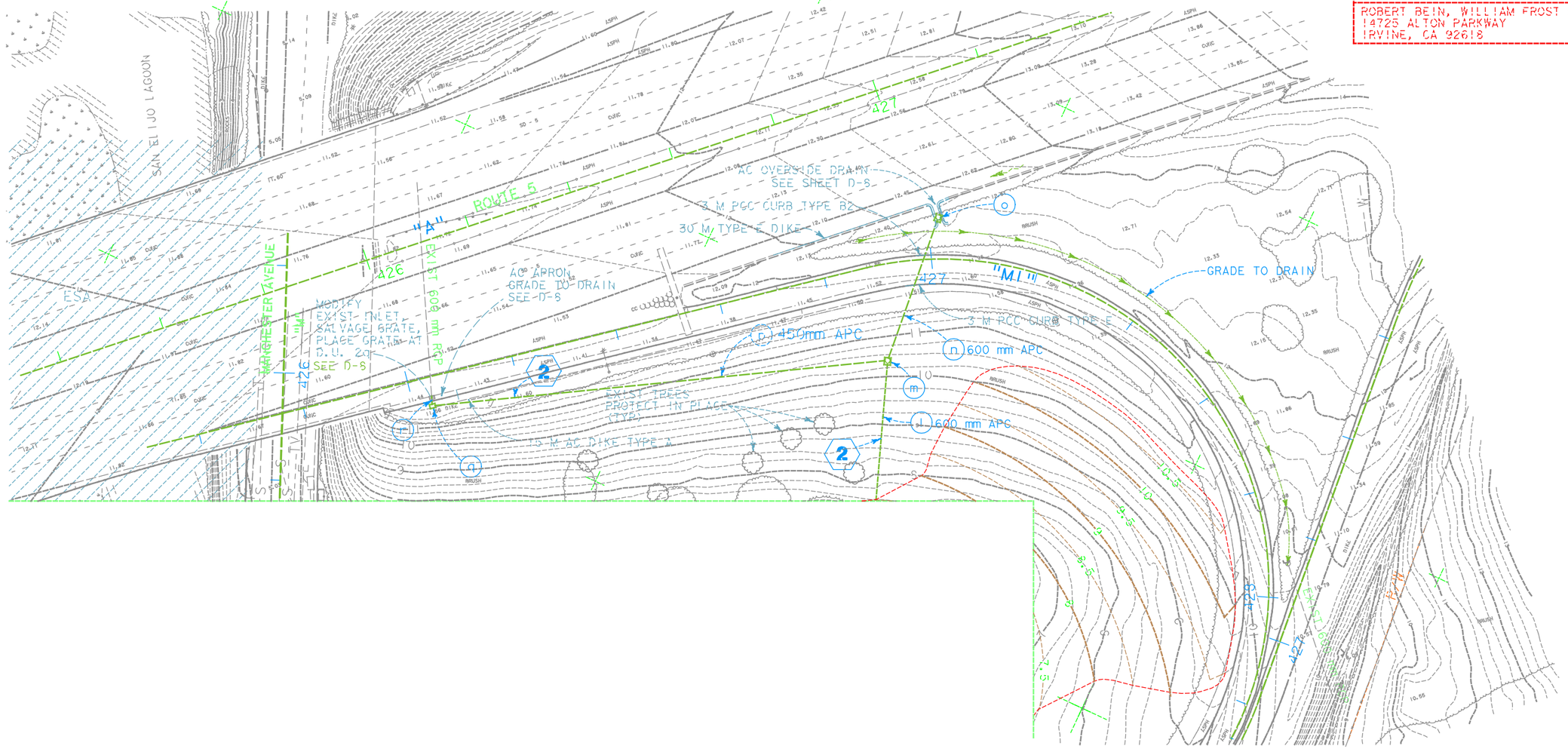

AS-CONSTRUCTED PLANS

The changes reflected in these AS-CONSTRUCTED PLANS were obtained by conducting a review of the site by RBF field surveyors in June of 2000. The field survey was limited to a review of the surface features and a review of the accessible invert elevations of drainage structures.

RBF is not responsible for the accuracy or completeness of electronic copies of this plan sheet.

Date of AS-CONSTRUCTED PLANS preparation. June 2000.

CCO 23
SHEET 19 OF 39
11-233504
LOCATION 4
MANCHESTER

CONTOUR GRADING AND DRAINAGE PLAN

SCALE: 1:400

D-2

DATE	BY	DATE	REVISED BY
		1/99	DATE REVISED

CALCULATED/DESIGNED BY: AMW
CHECKED BY: MC

DESIGN OVERSIGHT: CID TESORO

NPDES

STATE OF CALIFORNIA DEPARTMENT OF TRANSPORTATION
Caltrans

04-04-99

FOR REDUCED PLANS ORIGINAL SCALE IN MILLIMETERS 0 20 40 60 80

USERNAME => $$$$$$$USER$$$$$$$
DGN FILE => $$$$$$$$$$$DGNSPEC$$$$$$$$$$$

CU 11516

EA 233501

DIST	COUNTY	ROUTE	KILOMETER POST TOTAL PROJECT	SHEET NO	TOTAL SHEETS
11	SD	5	62.04	5	

REGISTERED CIVIL ENGINEER

APR 11 5, 1999

PLANS APPROVAL DATE

REGISTERED PROFESSIONAL ENGINEER — PAUL WALKER — CIVIL — EXP. 12-31-99 — STATE OF CALIFORNIA

The State of California or its officers or agents shall not be responsible for the accuracy or completeness of electronic copies of this plan sheet.

PARSONS BRINCKERHOFF QUADE & DOUGLAS, INC.
12225 EL CAMINO PARKWAY
SUITE 200
SAN DIEGO, CA 92130

ALL DIMENSIONS ARE IN METERS UNLESS OTHERWISE SHOWN

Caltrans Metric

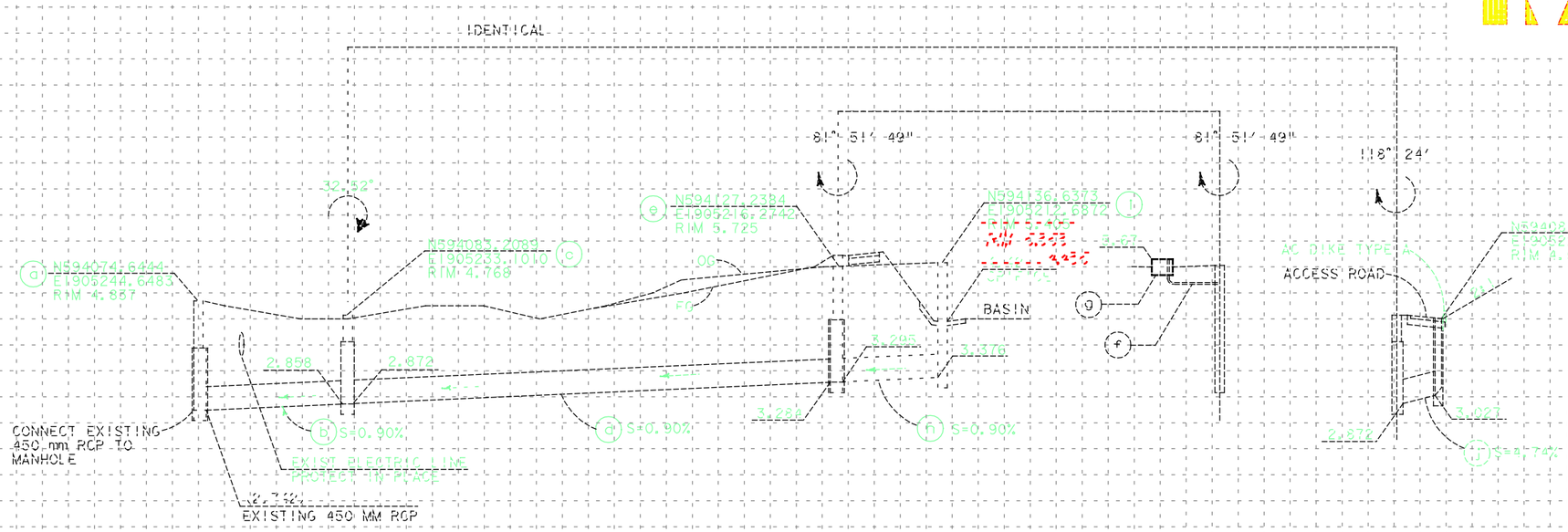

AS-CONSTRUCTED PLANS

THE ENGINEER REPRESENTS THE THREE AS-CONSTRUCTED PLANS WERE PREPARED BY PROJECTING A PROFILE OF THE STREAM BED FROM FIELD SURVEYS IN JUNE OF 2000. THE FIELD SURVEY WAS LIMITED TO A PROFILE OF THE SURFACE FEATURES AND A PROFILE OF THE DESIGNED STREAM BOTTOM OF DRAINAGE STRUCTURES.

PSE IS NOT RESPONSIBLE FOR THE ACCURACY OF "AS-CONSTRUCTED" DRAWINGS OF DRAINAGE STRUCTURES OF THIS PROJECT.

THE AS-CONSTRUCTED PLANS PROFILE INFORMATION WERE GIVEN

DRAINAGE SYSTEM NO (1)

(a) MH / TYPE X BASE, H=0.895, SEE SHEET D-12
(b) 450mm x 12.95 APC
(c) MH / TYPE X BASE, H=0.696, SEE SHEET D-12
(d) 450mm x 45.9 APC
(e) WOR MH, H=1.25, H_b=1.2, SEE SHEET D-12
(f) 50mm PVC, SEE SHT D-1, D-5
(g) 2x2 CONC PAD, SEE SHT D-1, D-5
(h) 450mm x 9.01 APC
(i) MOD GMP INLET W/ORIFICE AND CANAL GATE, H=2.18, D=1200mm, SEE SHEET D-6 AND D-7
(j) 450mm x 3.09 APC
(k) GI INLET, H=1.48

SCALE: HORIZ 1:250
VERT 1:50

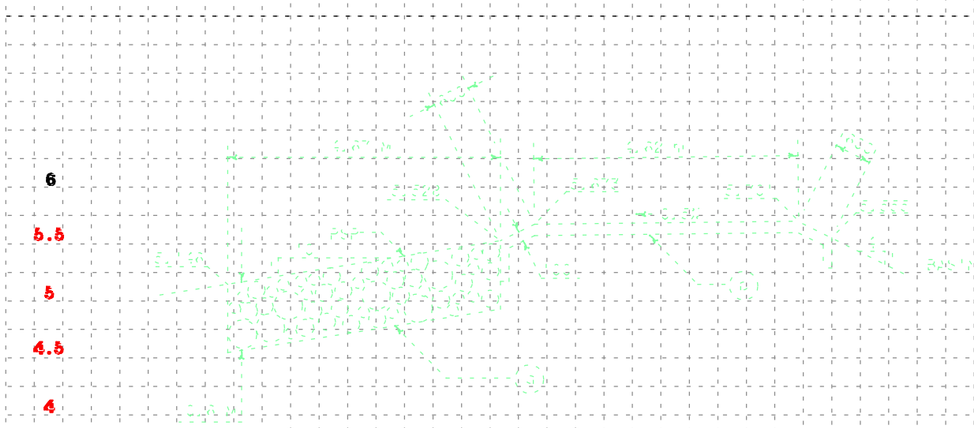

DRAINAGE SYSTEM NO (3)

(a) ROCK SLOPE PROTECTION, SEE SHEET D-10
(b) CONCRETE SPILLWAY, SEE SHEET D-10

CCO 23
SHEET 20 OF 39
11-233504
LOCATION 4
MANCHESTER

DRAINAGE PROFILES

SCALE: HORIZ 1:50
VERT 1:100

D-3

STATE OF CALIFORNIA - DEPARTMENT OF TRANSPORTATION
Caltrans
NPDES
DESIGN OVERSIGHT
CID TESORO

CALCULATED/DESIGNED BY AMW
CHECKED BY SMT
DATE 1/99
DATE 1/99
REVISED BY
DATE REVISED

Station
Exp
Emc

FOR REDUCED PLANS ORIGINAL SCALE IS IN MILLIMETERS 0 20 40 60 80

USERNAME => $USER
DGN FILE => $REQUEST

CU 11516
EA 233501

LAST REVISION 04-04-99
DATE PLOTTED => $DATE
$TIME

DIST	COUNTY	ROUTE	KILOMETER POST TOTAL PROJECT	SHEET NO.	TOTAL SHEETS
11	SD	5	62.04	6	

REGISTERED CIVIL ENGINEER

APRIL 5, 1999

PLANS APPROVAL DATE

REGISTERED PROFESSIONAL ENGINEER A.M. WALKER No. 57716 Exp. 12-31-99 CIVIL STATE OF CALIFORNIA

The seal of engineers on the cover of these plans indicate responsibility for the accuracy of engineering of electrical items of this plan sheet.

ROBERT BEIN, WILLIAM FROST & ASSOCIATES
14725 ALTON PARKWAY
IRVINE, CA 92618

AS-CONSTRUCTED PLANS

The strings referenced in these AS-CONSTRUCTED plans were originally constructed to the elevations and alignments in use at the time of the original construction of the structures. The elevations of the surface features and alignment of the horizontal elements of drainage structures.

RE-ESTABLISHMENT is for the accuracy of horizontal and elevations of this drawing.

This AS-CONSTRUCTED PLANS preparation during 2000

ALL DIMENSIONS ARE IN METERS UNLESS OTHERWISE SHOWN

Caltrans Metric

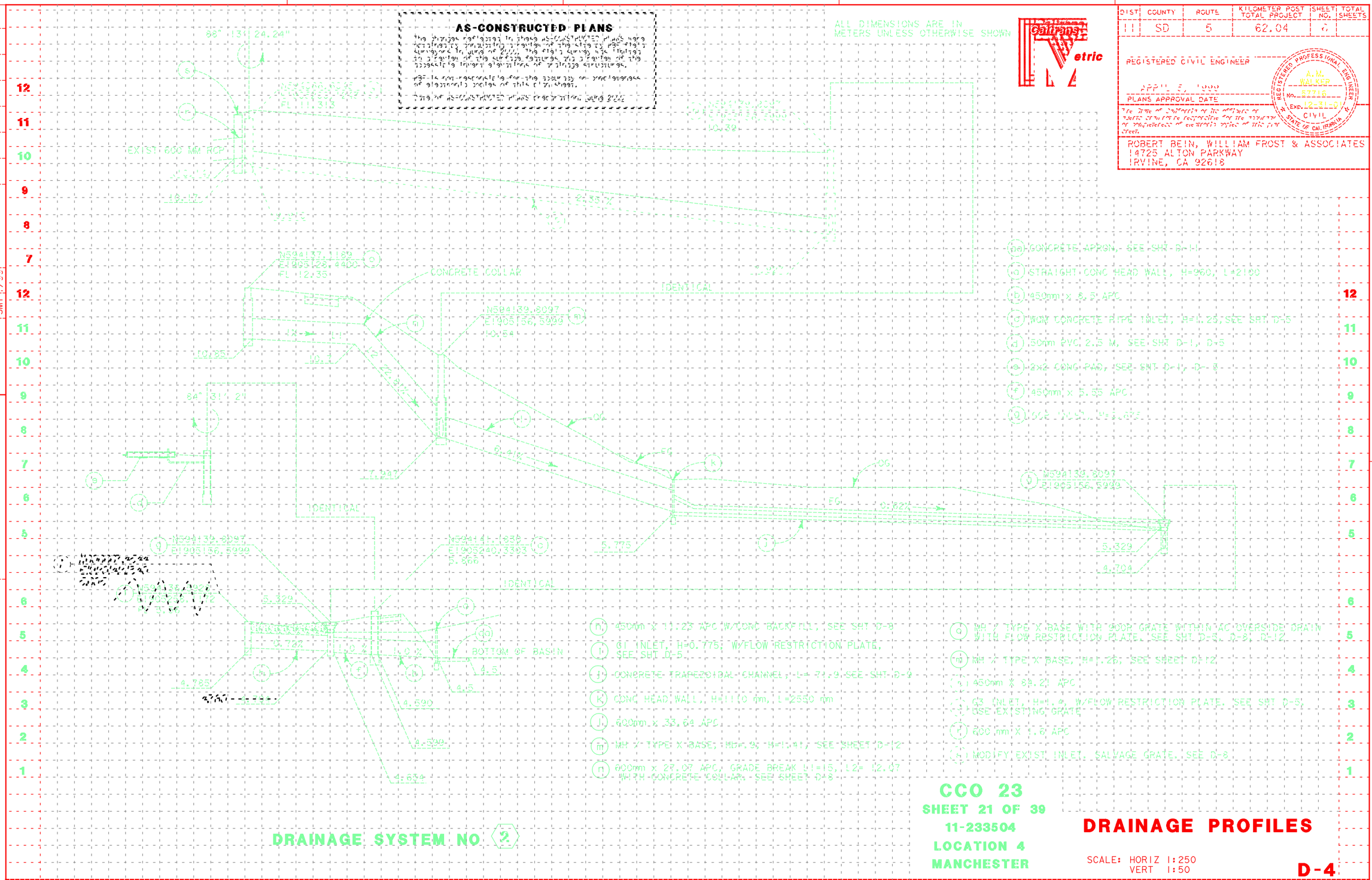

DRAINAGE SYSTEM NO 2

CCO 23
SHEET 21 OF 39
11-233504
LOCATION 4
MANCHESTER

DRAINAGE PROFILES

SCALE: HORIZ 1:250
VERT 1:50

D-4

DATE	REVISED BY	DATE	REVISED BY
1/99			

CALCULATED/DESIGNED BY: AMW
CHECKED BY: SMT

PROJECT ENGINEER: GID TESORO

NPDES

STATE OF CALIFORNIA DEPARTMENT OF TRANSPORTATION

DATE: 04-04-99

FOR REDUCED PLANS ORIGINAL SCALE IN MILLIMETERS 0 20 40 60 80

USERNAME => $$$$$$$USER$$$$$$$
DGN FILE => $$$$$$$$$$$DGNSPEC$$$$$$$$$$$

CU 11516

EA 233501

ALL DIMENSIONS ARE IN MILLIMETERS UNLESS OTHERWISE SHOWN

Caltrans Metric

DIST	COUNTY	ROUTE	KILOMETER POST TOTAL PROJECT	SHEET NO.	TOTAL SHEETS
11	SD	5	62.04	7	

REGISTERED CIVIL ENGINEER

APRIL 5, 1999

PLANS APPROVAL DATE

REGISTERED PROFESSIONAL ENGINEER A.M. WALKER No. 57716 Exp. 12-31-01 CIVIL STATE OF CALIFORNIA

The State of California or its officers or agents shall not be responsible for the accuracy or completeness of electronic copies of this plan sheet.

ROBERT BEIN, WILLIAM FROST & ASSOCIATES
14725 ALTON PARKWAY
IRVINE, CA 92618

AS-CONSTRUCTED PLANS

The changes reflected in these AS-CONSTRUCTED PLANS were obtained by conducting a review of the site by RBF field surveyors in June of 2000. The field survey was limited to a review of the surface features and a review of the accessible invert elevations of drainage structures.

RBF is not responsible for the accuracy or completeness of electronic copies of this plan sheet.

Date of AS-CONSTRUCTED PLANS preparation. June 2000

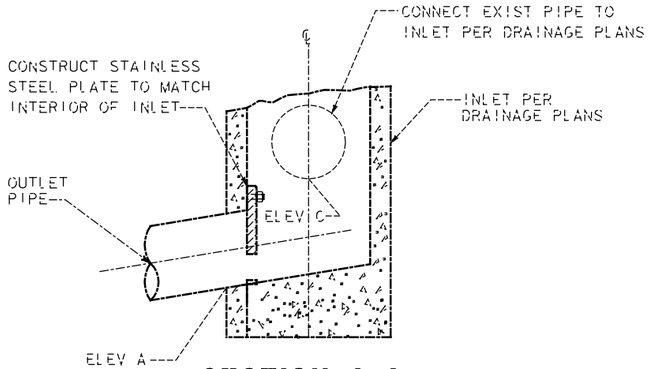

SECTION A-A

SYSTEM	UNIT	ELEV A (m)	ELEV C (m)	~~D~~	W	D
2	1	4.735	N/A	~~246~~	600	285
2	0	10.35	N/A	~~305~~	750	305
2	a	9.910	10.17	~~280~~	600	305

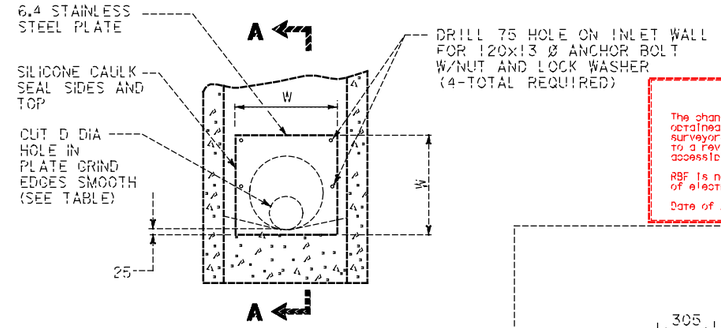

FLOW RESTRICTION PLATE

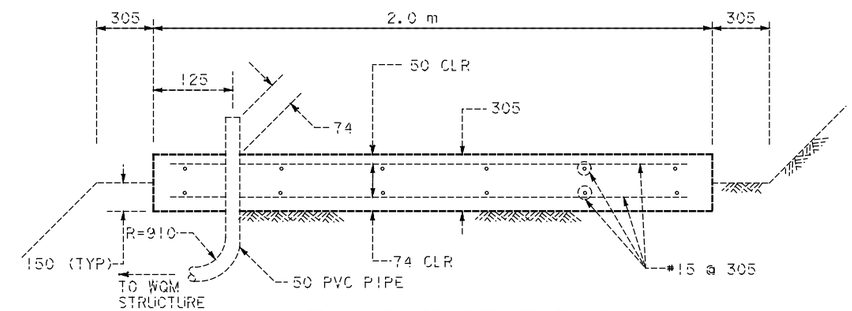

2 X 2 CONCRETE PAD

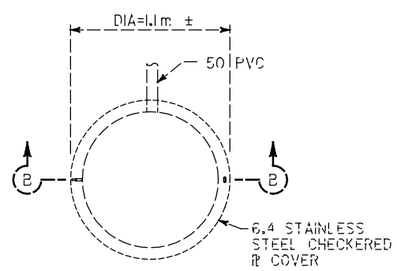

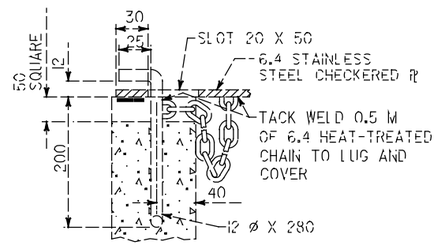

DETAIL "A"

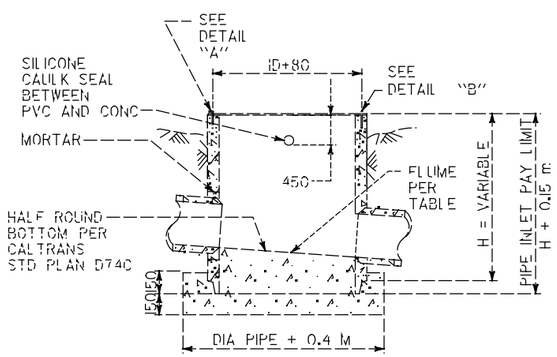

SECTION B-B

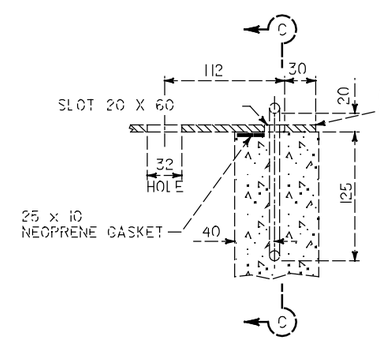

DETAIL "B"

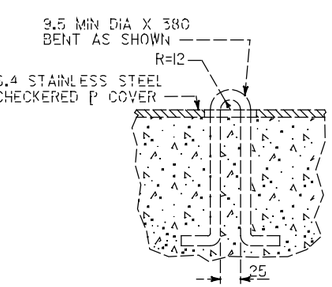

SECTION C-C

NOTES

1. INSTALL POLYPROPYLENE STEPS PER CALTRANS STANDARD PLAN D74C.
2. INLET PIPES SHALL NOT PROTRUDE INTO BASIN.
3. INLET BASIN FLOORS SHALL HAVE A WOOD TROWEL FINISH.
4. SEE CALTRANS STANDARD PLANS D77A AND D77B FOR GRATE AND FRAME DETAILS AND WEIGHTS OF MISCELLANEOUS IRON AND STEEL.

WATER QUALITY MONITORING PRECAST CONCRETE PIPE INLET

CCO 23
SHEET 22 OF 39
11-233504
LOCATION 4
MANCHESTER

DRAINAGE DETAILS

NO SCALE

D-5

04-04-99

DESIGN OVERSIGHT: CID TESORO
NPDES
DEPARTMENT OF TRANSPORTATION
STATE OF CALIFORNIA
Caltrans

	DATE	REVISED BY	DATE REVISED
CALCULATED/DESIGNED BY	AMW 1/99		
CHECKED BY	SMT 1/99		

FOR REDUCED PLANS ORIGINAL SCALE IN MILLIMETERS 0 20 40 60 80

USERNAME => $$$$$$USER$$$$$$
DGN FILE => $$$$$$$$$$DGNSPEC$$$$$$$$$$

CU 11516 | EA 233501

DIST	COUNTY	ROUTE	KILOMETER POST TOTAL PROJECT	SHEET NO.	TOTAL SHEETS
11	SD	5	62.04	8	

REGISTERED CIVIL ENGINEER

APRIL 5, 1999

PLANS APPROVAL DATE

REGISTERED PROFESSIONAL ENGINEER A.M. WALKER No. 57716 Exp. 12-31-01 CIVIL STATE OF CALIFORNIA

The State of California or its officers or agents shall not be responsible for the accuracy or completeness of electronic copies of this plan sheet.

ROBERT BEIN, WILLIAM FROST & ASSOCIATES
14725 ALTON PARKWAY
IRVINE, CA 92618

Caltrans Metric

AS-CONSTRUCTED PLANS

The changes reflected in these AS-CONSTRUCTED PLANS were obtained by conducting a review of the site by RBF field surveyors in June of 2000. The field survey was limited to a review of the surface features and a review of the accessible invert elevations of drainage structures.

RBF is not responsible for the accuracy or completeness of electronic copies of this plan sheet.

Date of AS-CONSTRUCTED PLANS preparation. June 2000

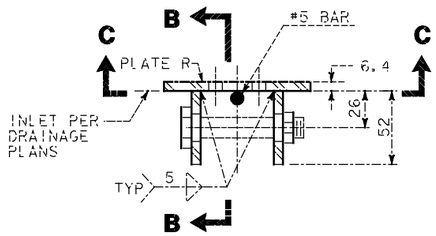

TRASH RACK FASTENER

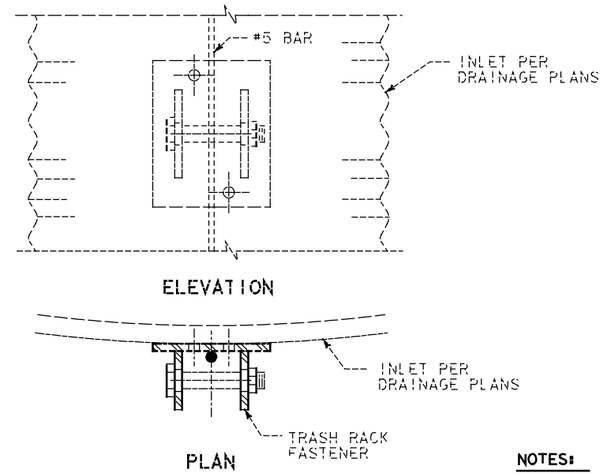

DETAIL 1

ALL DIMENSIONS ARE IN MILLIMETERS UNLESS OTHERWISE SHOWN

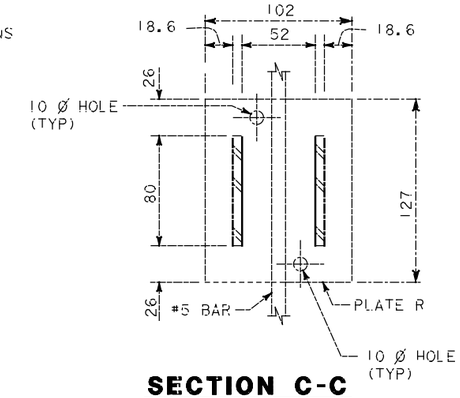

SECTION C-C

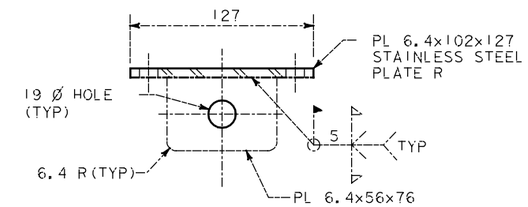

SECTION B-B

NOTES:

1. TRASH RACK FASTENERS SHALL BE BOLTED TO INLET AT LOCATIONS SHOWN.
2. ALL HARDWARE AND FABRICATION MATERIALS SHALL BE STAINLESS STEEL.
3. ALL BARS SHALL BE STAINLESS STEEL.

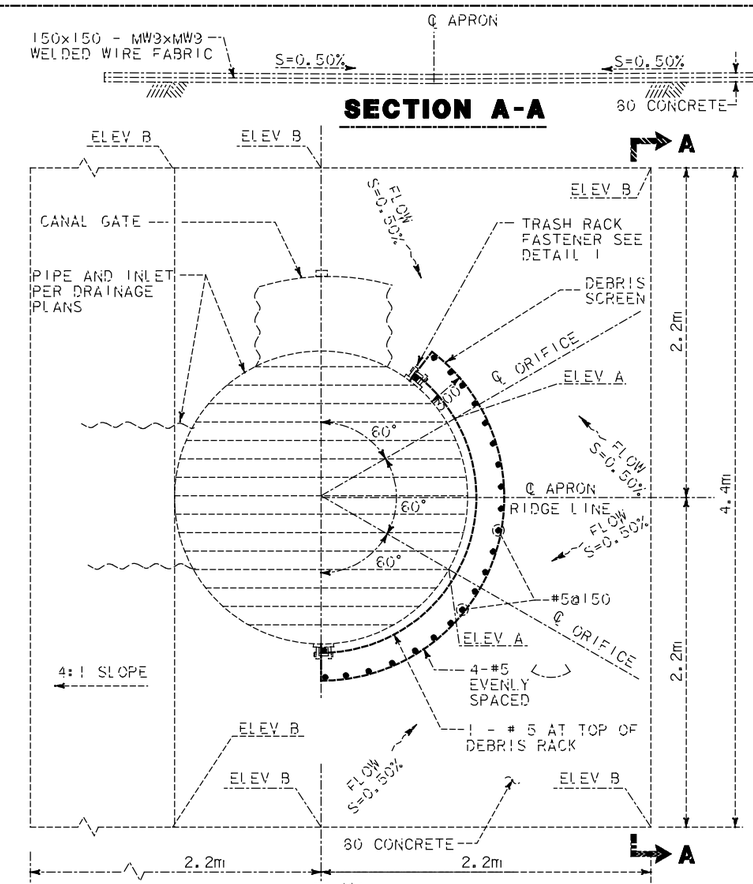

PLAN

MODIFIED CONCRETE APRON

SHOWN WITH DEBRIS RACK AND DEBRIS SCREEN

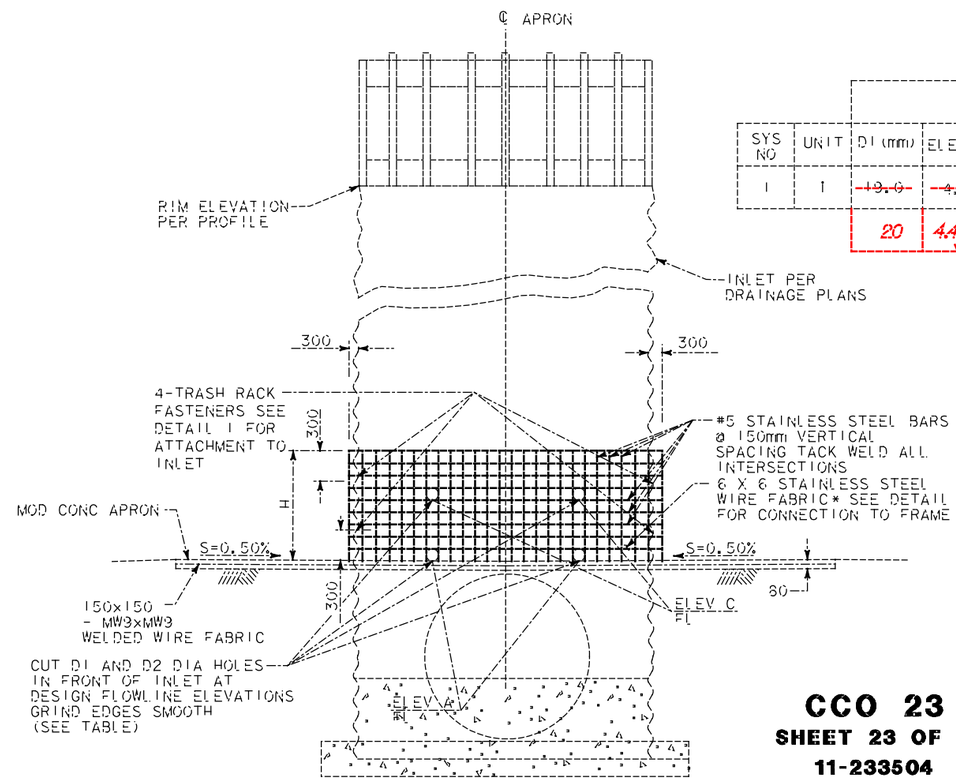

ORIFICE OPENING AND DEBRIS SCREEN

SYS NO	UNIT	RISER D1 (mm)	RISER ELEV A	RISER D2 (mm)	RISER ELEV C	RISER ELEV D	APRON ELEV B	H (m)
1	1	~~19.0~~	~~4.42~~	~~15.6~~	~~5.063~~	~~3.376~~	~~4.43~~	~~1.06~~
		20	4.435	20	5.073	3.418	4.454	
			AVERAGE		AVERAGE		AVERAGE	

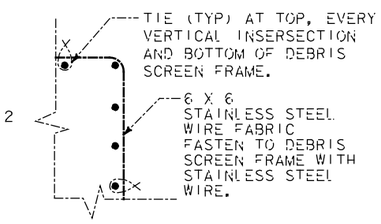

DETAIL 2

CCO 23
SHEET 23 OF 39
11-233504
LOCATION 4
MANCHESTER

DRAINAGE DETAILS

NO SCALE

D-6

DESIGN OVERSIGHT: CID TESORO
DEPARTMENT OF TRANSPORTATION — NPDES
STATE OF CALIFORNIA
Caltrans
CALCULATED/DESIGNED BY: AMW 11/99
CHECKED BY: SMT 11/99
DATE REVISED BY
DATE REVISED

04-04-99

FOR REDUCED PLANS ORIGINAL SCALE IN MILLIMETERS 0 20 40 60 80

USERNAME => $$$$$$$USER$$$$$$$
DGN FILE => $$$$$$$$$$$DGNSPEC$$$$$$$$$$$

CU 11516

EA 233501

DIST	COUNTY	ROUTE	KILOMETER POST TOTAL PROJECT	SHEET NO.	TOTAL SHEETS
11	SD	5	62.04	9	

REGISTERED CIVIL ENGINEER

APRIL 5, 1999

PLANS APPROVAL DATE

The State of California or its officers or agents shall not be responsible for the accuracy or completeness of electronic copies of this plan sheet.

REGISTERED PROFESSIONAL ENGINEER A.M. WALKER No. 57716 Exp. 12-31-01 CIVIL STATE OF CALIFORNIA

ROBERT BEIN, WILLIAM FROST & ASSOCIATES
14725 ALTON PARKWAY
IRVINE, CA 92618

ALL DIMENSIONS ARE IN MILLIMETERS UNLESS OTHERWISE SHOWN

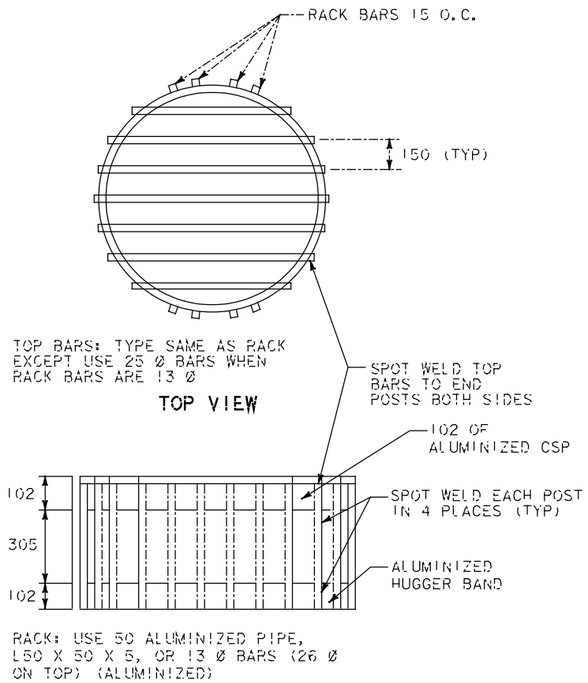

DEBRIS RACK CAGE

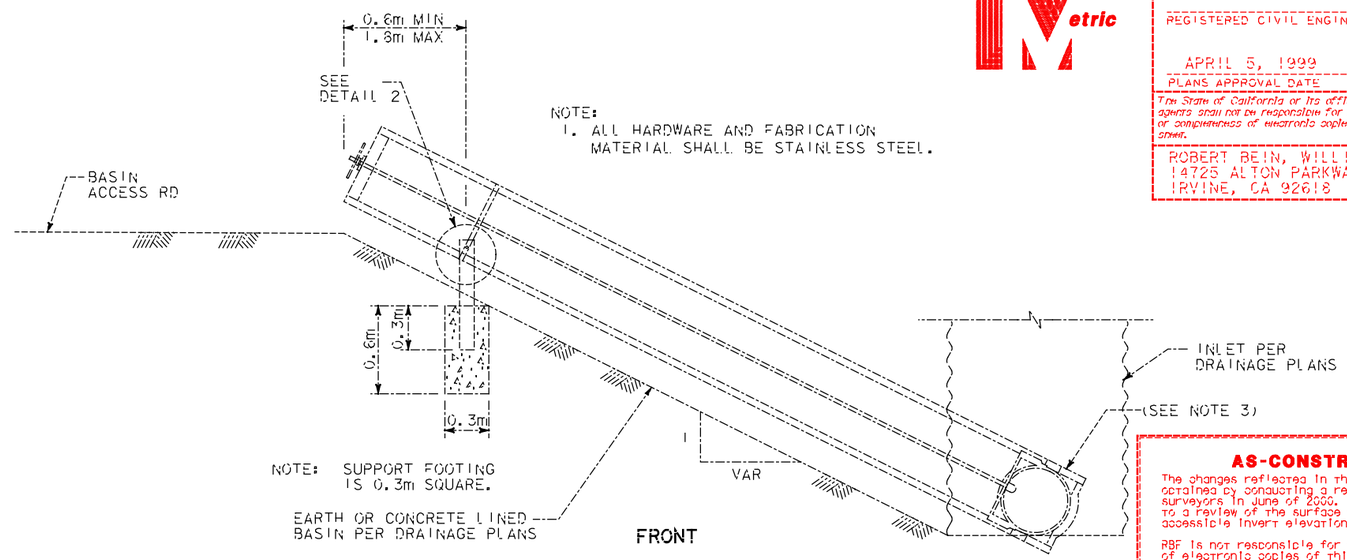

NOTE:
1. ALL HARDWARE AND FABRICATION MATERIAL SHALL BE STAINLESS STEEL.

CANAL GATE SECTION

AS-CONSTRUCTED PLANS

The changes reflected in these AS-CONSTRUCTED PLANS were obtained by conducting a review of the site by RBF field surveyors in June of 2000. The field survey was limited to a review of the surface features and a review of the accessible invert elevations of drainage structures.

RBF is not responsible for the accuracy or completeness of electronic copies of this plan sheet.

Date of AS-CONSTRUCTED PLANS preparation, June 2000

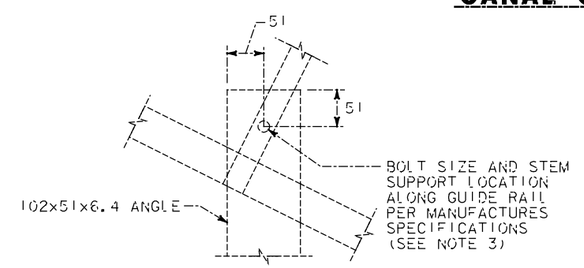

DETAIL 2

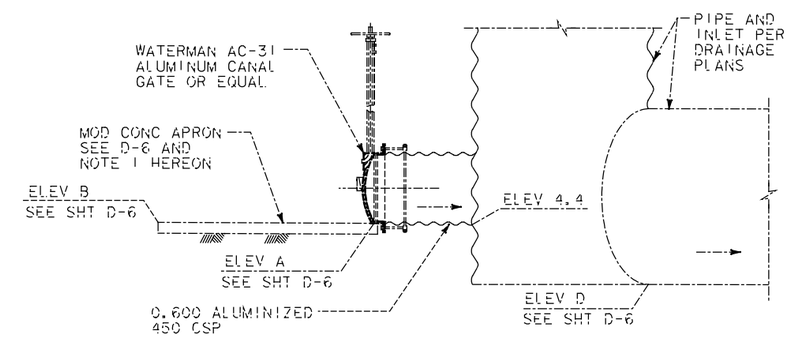

ELEVATION

NOTE:
1. FORM MODIFIED CONCRETE APRON ADJACENT TO THE CANAL GATE CONNECTION, AS NECESSARY, TO ACCOMODATE CANAL GATE HARDWARE.
2. ELEVATIONS PER DRAINAGE PLANS.
3. ALL HARDWARE AND FABRICATION MATERIAL SHALL BE STAINLESS STEEL.

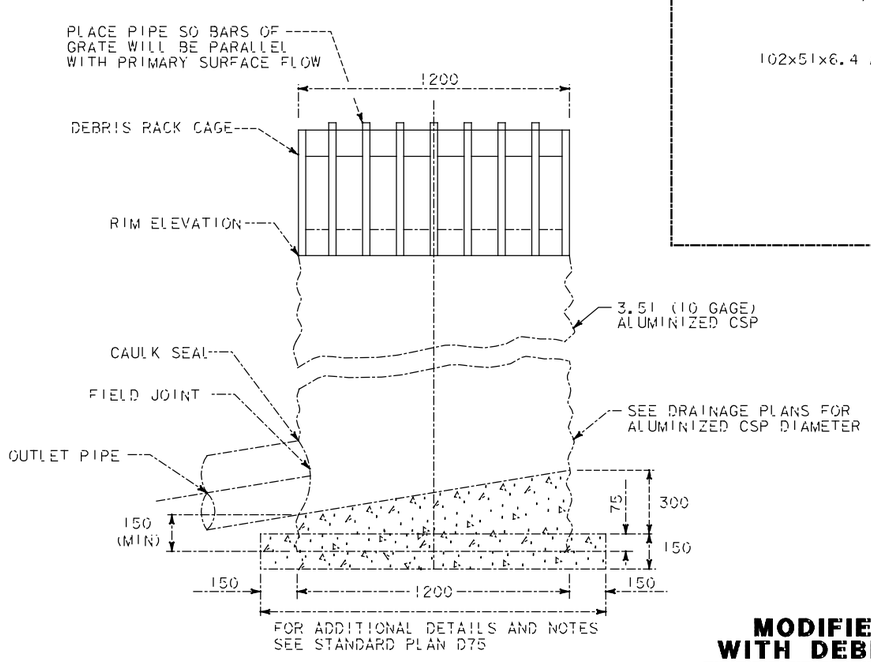

SECTION A-A

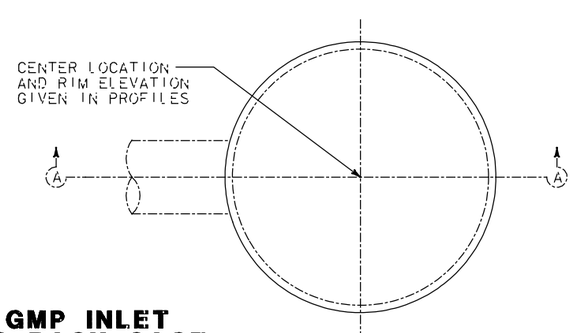

MODIFIED GMP INLET WITH DEBRIS RACK CAGE

CCO 23
SHEET 24 OF 39
11-233504
LOCATION 4
MANCHESTER

DRAINAGE DETAILS

NO SCALE

D-7

04-04-99

CALCULATED/DESIGNED BY	DATE	REVISED BY
AMW	1/99	
CHECKED BY	DATE REVISED	
SMT	1/99	

PROJECT ENGINEER: CID TESORO

DEPARTMENT OF TRANSPORTATION: NPDES

STATE OF CALIFORNIA: Caltrans

$DATE$ $TIME$ $FILE$

FOR REDUCED PLANS ORIGINAL SCALE IN MILLIMETERS 0 20 40 60 80

USERNAME => $$$$$$USER$$$$$$
DGN FILE => $$$$$$$$$$DGNSPEC$$$$$$$$$$

CU 11516

EA 233501

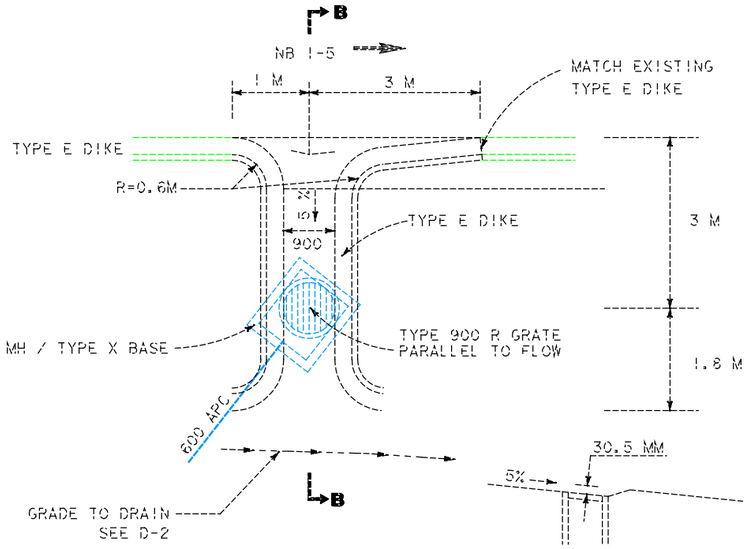

SECTION B-B

TYPE 900R GRATE WITHIN AC OVERSIDE DRAIN

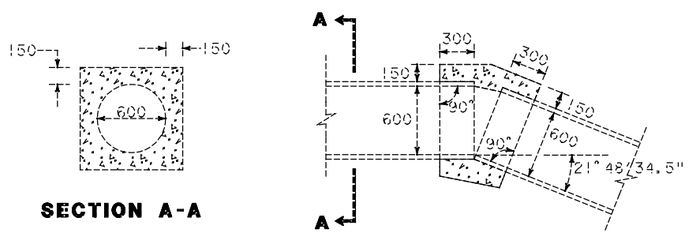

SECTION A-A

CONCRETE COLLAR DETAIL

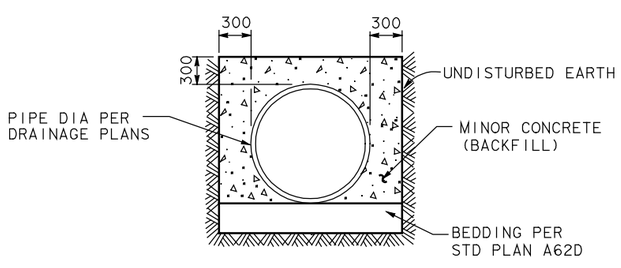

MINOR CONCRETE (BACKFILL) DETAIL

ALL DIMENSIONS ARE IN MILLIMETERS UNLESS OTHERWISE SHOWN

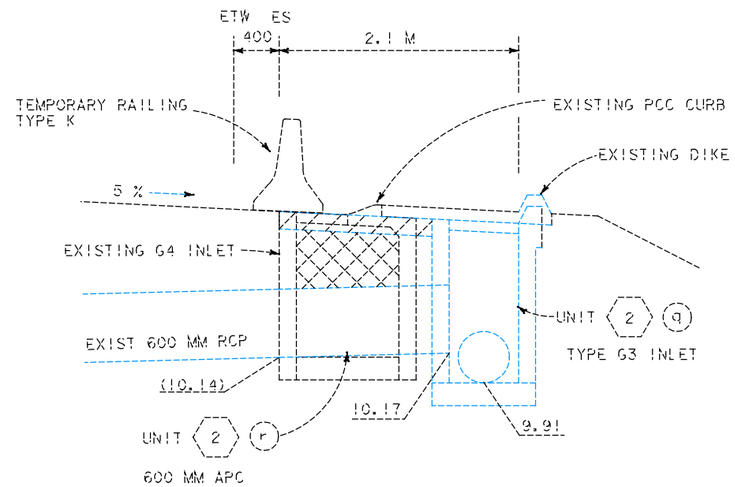

MODIFY EXISTING INLET

AC PAVING (60 MM)

PCC BACKFILL

NOTES:

1. DEMOLISH TOP 150 MM OF EXISTING INLET
2. AFTER PLACING 600MM APC, CAP EXISTING INLET WITH PCC

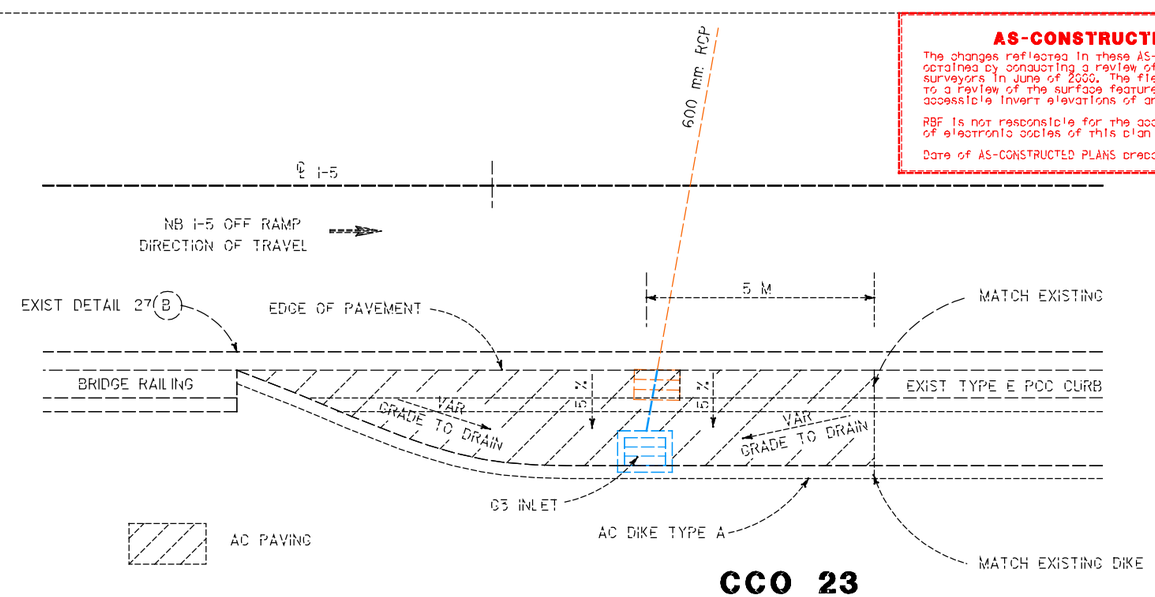

AC APRON

AS-CONSTRUCTED PLANS

The changes reflected in these AS-CONSTRUCTED PLANS were obtained by conducting a review of the site by RBF field surveyors in June of 2000. The field survey was limited to a review of the surface features and a review of the accessible invert elevations of drainage structures.

RBF is not responsible for the accuracy or completeness of electronic copies of this plan sheet.

Date of AS-CONSTRUCTED PLANS preparation. June 2000

DIST	COUNTY	ROUTE	KILOMETER POST TOTAL PROJECT	SHEET NO.	TOTAL SHEETS
11	SD	5	62.04	10	

REGISTERED CIVIL ENGINEER

APRIL 5, 1999

PLANS APPROVAL DATE

The State of California or its officers or agents shall not be responsible for the accuracy or completeness of electronic copies of this plan sheet.

REGISTERED PROFESSIONAL ENGINEER A.M. WALKER No. 57716 Exp. 12-31-01 CIVIL STATE OF CALIFORNIA

ROBERT BEIN, WILLIAM FROST & ASSOCIATES
14725 ALTON PARKWAY
IRVINE, CA 92618

CCO 23
SHEET 25 OF 39
11-233504
LOCATION 4
MANCHESTER

DRAINAGE DETAILS

NO SCALE

D-8

DATE	REVISED BY	DATE REVISED
1/99	AMW	1/99
1/99	SMT	

CALCULATED/DESIGNED BY | CHECKED BY

DESIGN OVERSIGHT: CID TESORO

STATE OF CALIFORNIA - DEPARTMENT OF TRANSPORTATION

NPDES

$DATE$ $TIME$ $FILE$

04-04-99

FOR REDUCED PLANS ORIGINAL SCALE IN MILLIMETERS 0 20 40 60 80

USERNAME => $$$$$$USER$$$$$$
DGN FILE => $$$$$$$$$$$DGNSPEC$$$$$$$$$$$

CU 11516 | EA 233501

ALL DIMENSIONS ARE IN MILLIMETERS UNLESS OTHERWISE SHOWN

Caltrans Metric

DIST	COUNTY	ROUTE	KILOMETER POST TOTAL PROJECT	SHEET NO.	TOTAL SHEETS
11	SD	5	62.04	11	

REGISTERED CIVIL ENGINEER

APRIL 5, 1999
PLANS APPROVAL DATE

REGISTERED PROFESSIONAL ENGINEER A.M. WALKER No. 57716 Exp. 12-31-01 CIVIL STATE OF CALIFORNIA

The State of California or its officers or agents shall not be responsible for the accuracy or completeness of electronic copies of this plan sheet.

ROBERT BEIN, WILLIAM FROST & ASSOCIATES
14725 ALTON PARKWAY
IRVINE, CA 92618

AS-CONSTRUCTED PLANS

The changes reflected in these AS-CONSTRUCTED PLANS were obtained by conducting a review of the site by RBF field surveyors in June of 2000. The field survey was limited to a review of the surface features and a review of the accessible invert elevations of drainage structures.

RBF is not responsible for the accuracy or completeness of electronic copies of this plan sheet.

Date of AS-CONSTRUCTED PLANS preparation. June 2000.

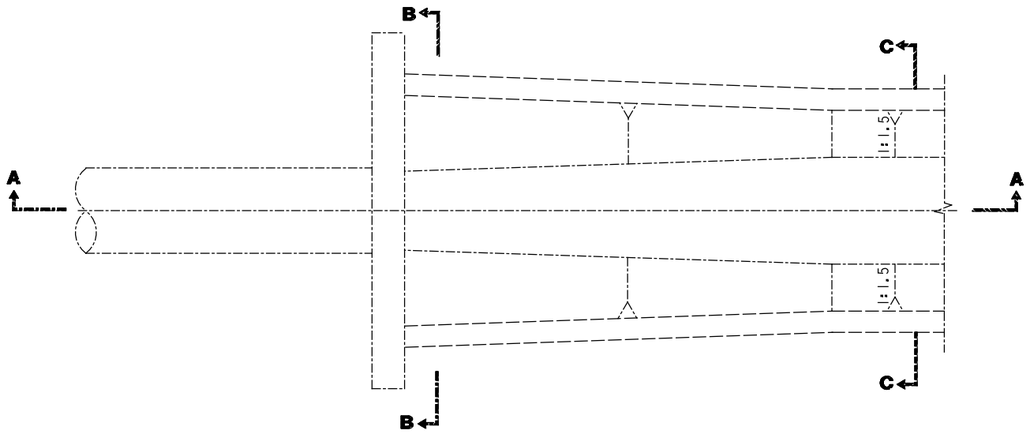

PLAN
HEADWALL TO TRAPEZOIDAL CHANNEL TRANSITION

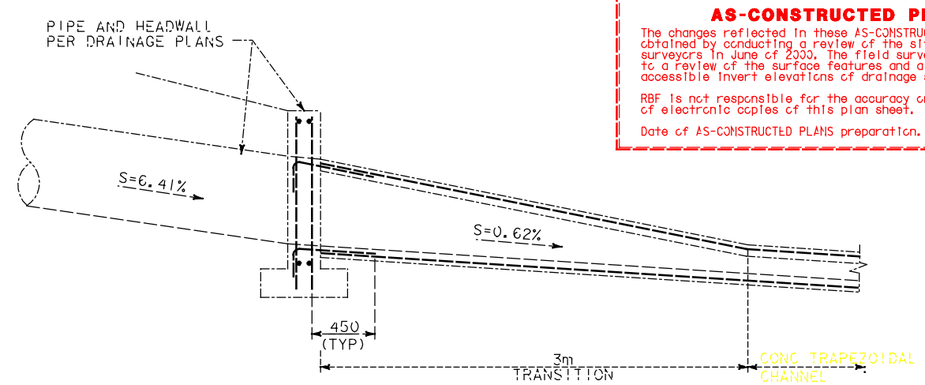

SECTION A-A

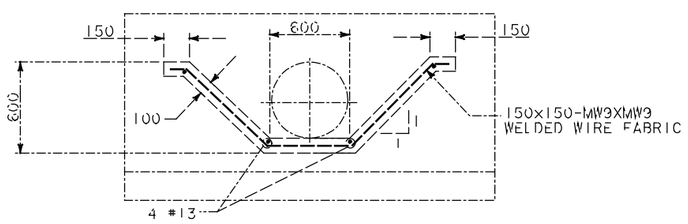

SECTION B-B

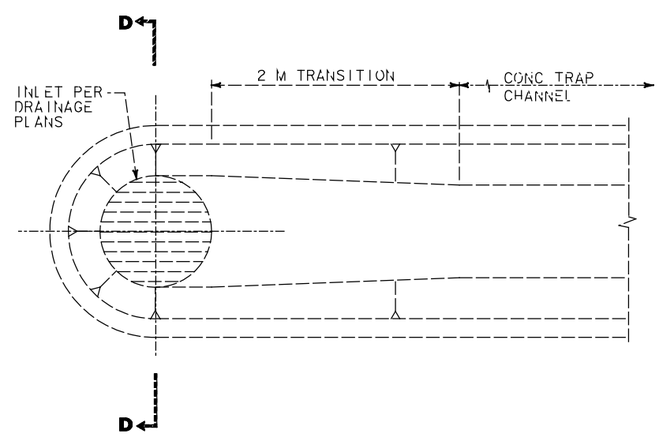

CONCRETE TRAPEZOIDAL CHANNEL TRANSITION TO TYPE GCP INLET

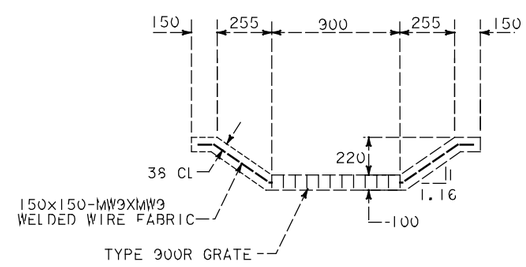

SECTION D-D

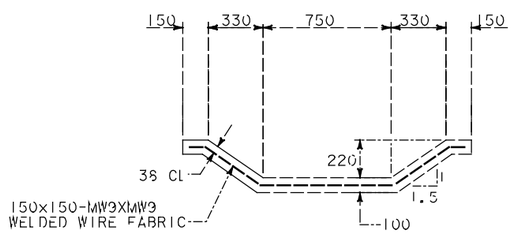

SECTION C-C

CONCRETE TRAPEZOIDAL CHANNEL

CCO 23
SHEET 26 OF 39
11-233504
LOCATION 4
MANCHESTER

DRAINAGE DETAILS

NO SCALE

D-9

DESIGN OVERSIGHT **CID TESORO**

NPDES

STATE OF CALIFORNIA - DEPARTMENT OF TRANSPORTATION

Caltrans

CALCULATED/DESIGNED BY	DATE 1/99	REVISED BY	DATE REVISED
CHECKED BY	SMT 1/99	AMW	

FOR REDUCED PLANS ORIGINAL SCALE IN MILLIMETERS 0 20 40 60 80

USERNAME => $$$$$$$USER$$$$$$$
DGN FILE => $$$$$$$$$$$DGNSPEC$$$$$$$$$$$

CU 11516 EA 233501

04-04-99

AS-CONSTRUCTED PLANS

The changes reflected in these AS-CONSTRUCTED PLANS were obtained by conducting a review of the site by RBF field surveyors in June of 2000. The field survey was limited to a review of the surface features and a review of the accessible invert elevations of drainage structures.

RBF is not responsible for the accuracy or completeness of electronic copies of this plan sheet.

Date of AS-CONSTRUCTED PLANS preparation. June 2000

ALL DIMENSIONS ARE IN MILLIMETERS UNLESS OTHERWISE SHOWN

Caltrans Metric

DIST	COUNTY	ROUTE	KILOMETER POST TOTAL PROJECT	SHEET NO.	TOTAL SHEETS
11	SD	5	62.04	12	

REGISTERED CIVIL ENGINEER

APRIL 5, 1999

PLANS APPROVAL DATE

The State of California or its officers or agents shall not be responsible for the accuracy or completeness of electronic copies of this plan sheet.

REGISTERED PROFESSIONAL ENGINEER A.M. WALKER No. 57716 Exp. 12-31-01 CIVIL STATE OF CALIFORNIA

ROBERT BEIN, WILLIAM FROST & ASSOCIATES
14725 ALTON PARKWAY
IRVINE, CA 92618

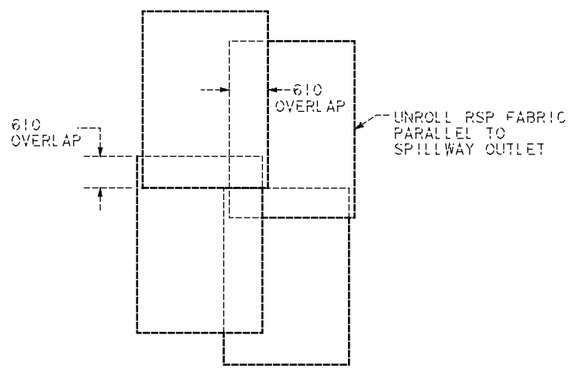

RSP FABRIC OVERLAP DETAIL

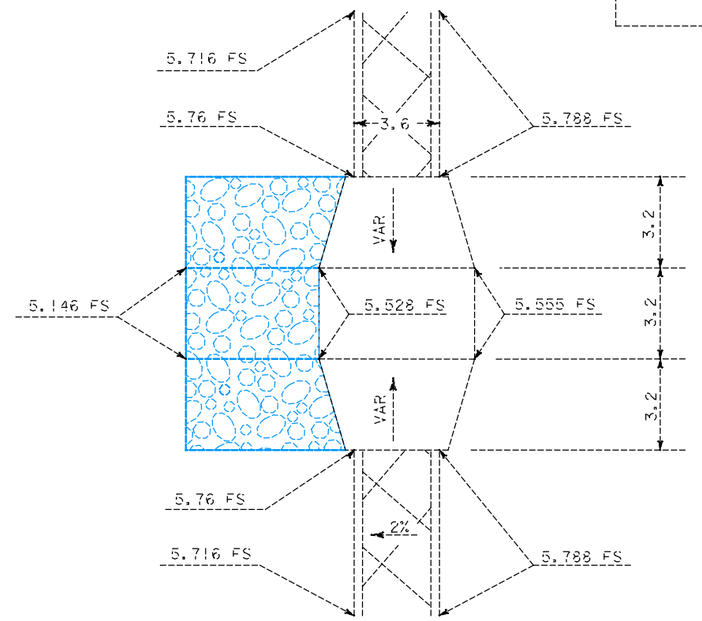

PLAN VIEW

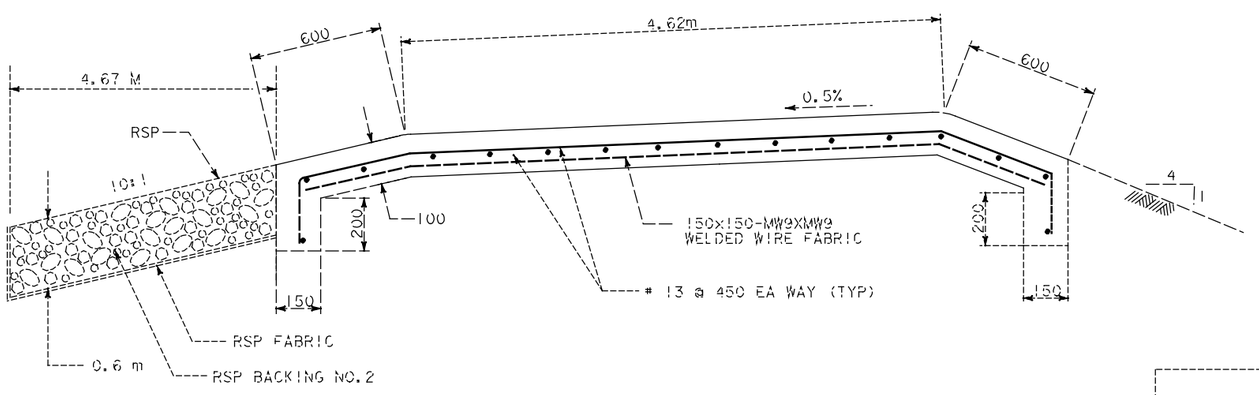

ROCK SLOPE PROTECTION AND CONCRETE SPILLWAY

NO SCALE

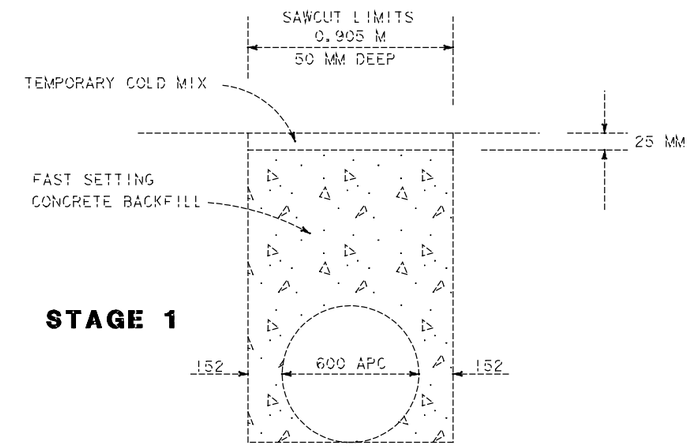

STAGE 1

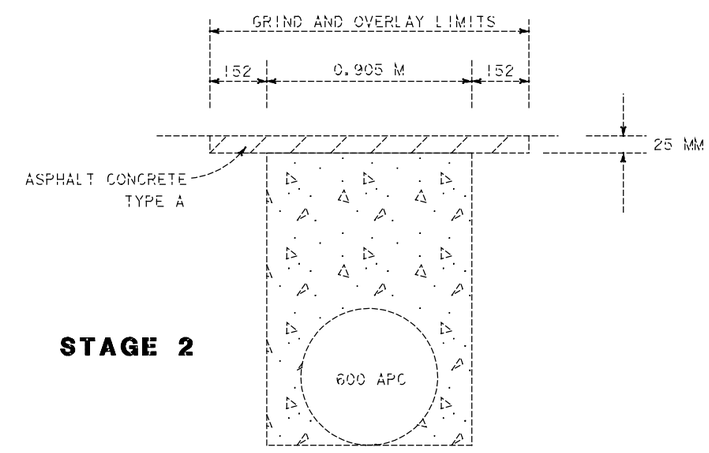

STAGE 2

D.U. 2 n BACKFILL DETAIL

CCO 23
SHEET 27 OF 39
11-233504
LOCATION 4
MANCHESTER

DRAINAGE DETAILS

NO SCALE

D-10

04-04-99

CALCULATED/DESIGNED BY	AMW	DATE 1/99	REVISED BY
CHECKED BY	SMT	1/99	DATE REVISED

DESIGN OVERSIGHT: **CID TESORO**

DEPARTMENT OF TRANSPORTATION: **NPDES**

STATE OF CALIFORNIA: Caltrans

$DATE$ $TIME$ $FILE$

FOR REDUCED PLANS ORIGINAL SCALE IN MILLIMETERS 0 20 40 60 80

USERNAME => $$$$$$USER$$$$$$
DGN FILE => $$$$$$$$$$$DGNSPEC$$$$$$$$$$$

CU 11516

EA 233501

DIST	COUNTY	ROUTE	KILOMETER POST TOTAL PROJECT	SHEET NO.	TOTAL SHEETS
11	SD	5	62.04	13	

REGISTERED CIVIL ENGINEER

APRIL 5, 1999

PLANS APPROVAL DATE

REGISTERED PROFESSIONAL ENGINEER A.M. WALKER No. 57716 Exp. 12-31-01 CIVIL STATE OF CALIFORNIA

The State of California or its officers or agents shall not be responsible for the accuracy or completeness of electronic copies of this plan sheet.

ROBERT BEIN, WILLIAM FROST & ASSOCIATES
14725 ALTON PARKWAY
IRVINE, CA 92618

ALL DIMENSIONS ARE IN MILLIMETERS UNLESS OTHERWISE SHOWN

Caltrans Metric

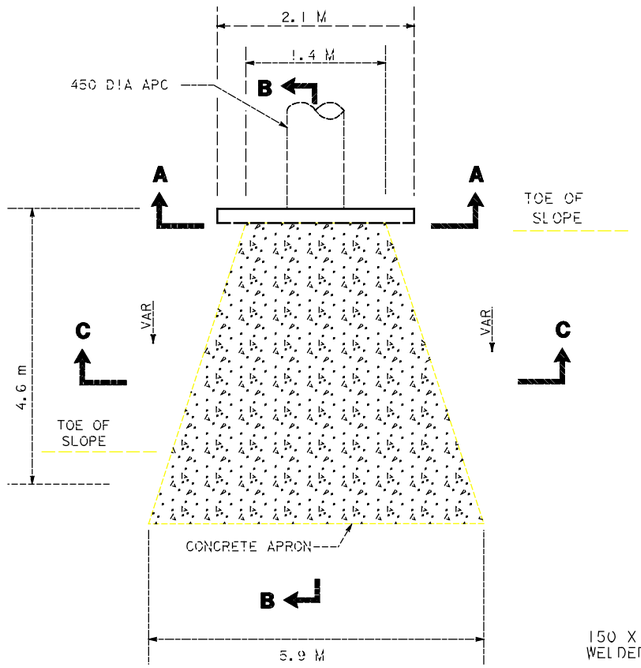

PLAN

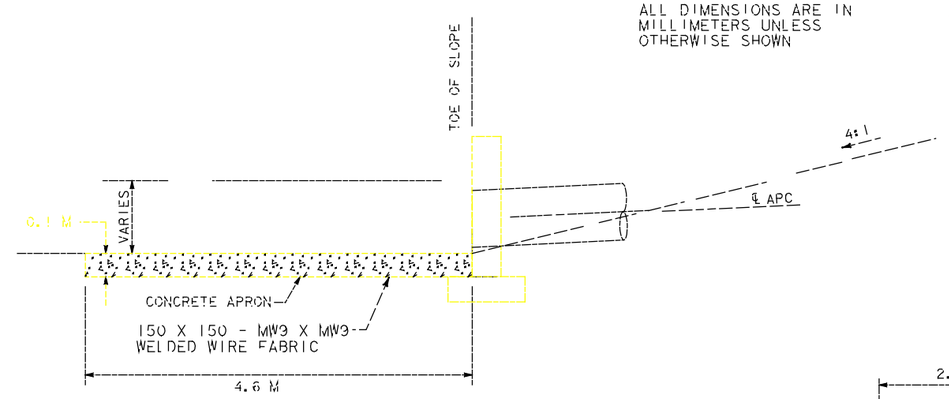

SECTION B-B

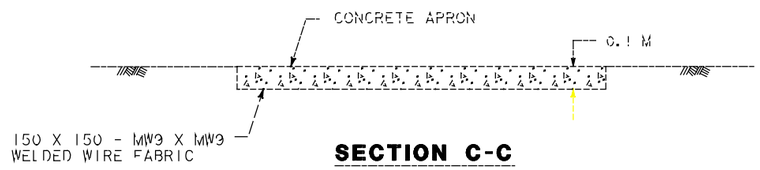

SECTION C-C

CONCRETE APRON

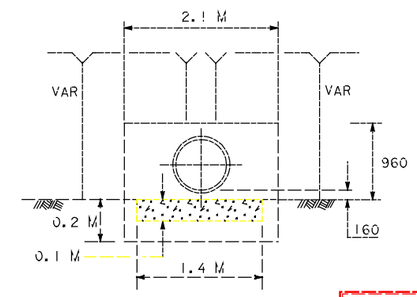

SECTION A-A

AS-CONSTRUCTED PLANS

The changes reflected in these AS-CONSTRUCTED PLANS were obtained by conducting a review of the site by RBF field surveyors in June of 2000. The field survey was limited to a review of the surface features and a review of the accessible invert elevations of drainage structures.

RBF is not responsible for the accuracy or completeness of electronic copies of this plan sheet.

Date of AS-CONSTRUCTED PLANS preparation. June 2000.

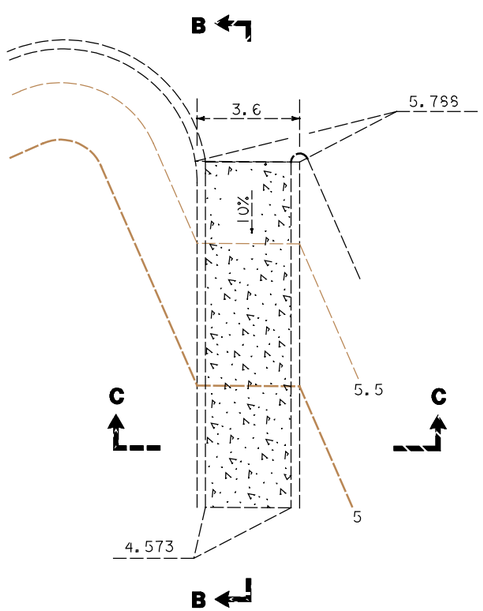

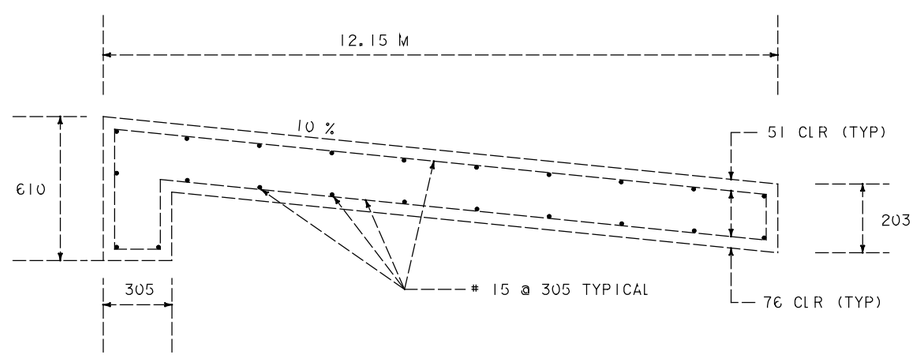

SECTION B-B

CONCRETE ACCESS RAMP

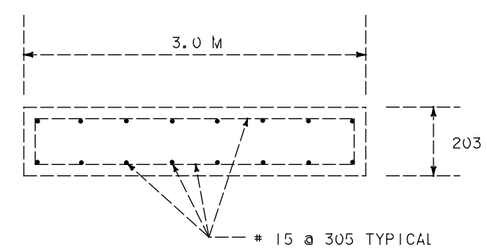

SECTION A-A

DRAINAGE DETAILS

NO SCALE

D-11

DESIGN OVERSIGHT **CID TESORO**

DEPARTMENT OF TRANSPORTATION **NPDES**

STATE OF CALIFORNIA Caltrans

DATE REVISED BY	DATE REVISED

CALCULATED/DESIGNED BY	AMW	DATE 1/99
CHECKED BY	SMT	1/99

&DATE& &TIME& &FILE&

FOR REDUCED PLANS ORIGINAL SCALE IN MILLIMETERS 0 20 40 60 80

USERNAME => &&&&&&USER&&&&&&
DGN FILE => &&&&&&&&&&DGNSPEC&&&&&&&&&&

CU 11516 EA 233501

04-04-99

ALL DIMENSIONS ARE IN MILLIMETERS UNLESS OTHERWISE SHOWN

Caltrans Metric

DIST	COUNTY	ROUTE	KILOMETER POST TOTAL PROJECT	SHEET NO.	TOTAL SHEETS
11	SD	5	62.04	14	

REGISTERED CIVIL ENGINEER

APRIL 5, 1999
PLANS APPROVAL DATE

REGISTERED PROFESSIONAL ENGINEER A.M. WALKER No. 57716 Exp. 12-31-01 CIVIL STATE OF CALIFORNIA

The State of California or its officers or agents shall not be responsible for the accuracy or completeness of electronic copies of this plan sheet.

ROBERT BEIN, WILLIAM FROST & ASSOCIATES
14725 ALTON PARKWAY
IRVINE, CA 92618

AS-CONSTRUCTED PLANS

The changes reflected in these AS-CONSTRUCTED PLANS were obtained by conducting a review of the site by RBF field surveyors in June of 2000. The field survey was limited to a review of the surface features and a review of the accessible invert elevations of drainage structures.

RBF is not responsible for the accuracy or completeness of electronic copies of this plan sheet.

Date of AS-CONSTRUCTED PLANS preparation. June 2000

D_2	H_b	L
675 OR LESS	0.9 m	1.2 m
750 TO 975 INCLUSIVE	1.2 m	1.2 m

EXCEPTIONS TO BE NOTED ON PLANS.

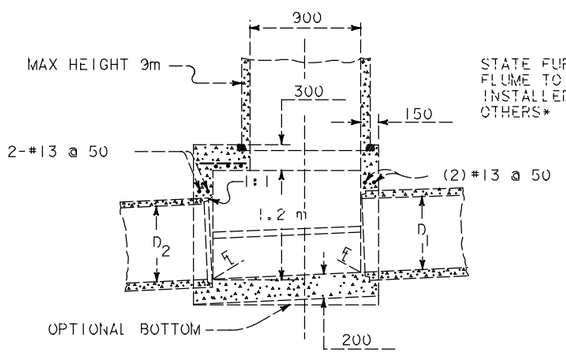

SECTION G-G

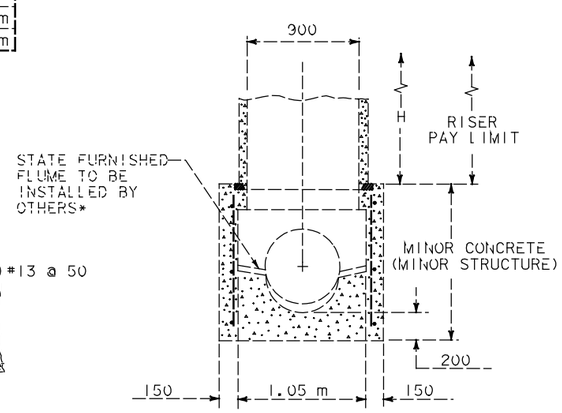

SECTION F-F

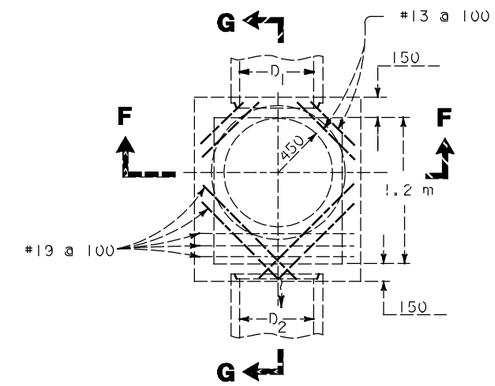

PLAN

FOR USE WHEN D_2 (OUTLET PIPE DIA) IS 975 OR LESS

STORM DRAIN & MANHOLE STRUCTURE (TYPE X BASE)

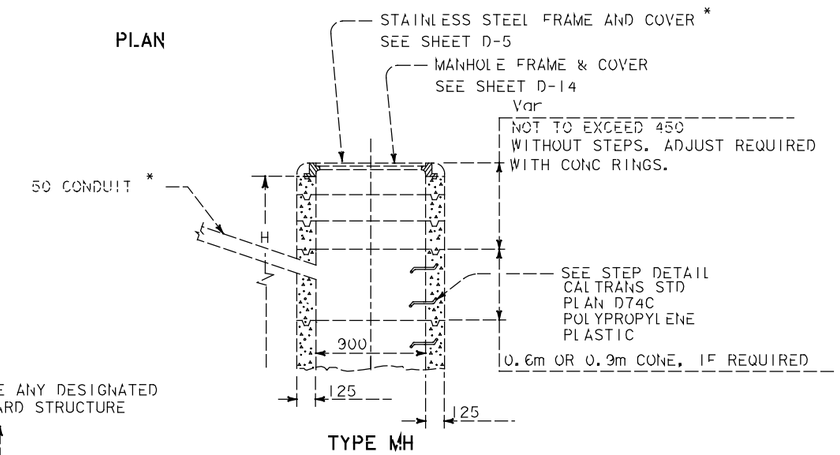

TYPE MH

FOR USE WITH EITHER TYPE X OR TYPE Y BASE STRUCTURES

UPPER STRUCTURE

GENERAL NOTES

1. RISERS MAY BE MADE UP OF 150mm , 200mm , 450mm , 600mm , OR 1200mm SECTIONS.
2. EACH RISER SHALL HAVE STEPS, AS DETAILED ON STANDARD PLAN D74C. WHICH SHALL BE SUSPENDED INTO BASE STRUCTURE.
3. ALL PRECAST COMPONENTS FOR UPPER PORTION TYPE MH SHALL BE REINFORCED WITH 6mm DIAMETER STEEL WOUND SPIRALLY @ 100mm CENTERS.
4. H AND Hb SHALL BE AS SHOWN ON PLANS.
5. REINFORCING STEEL SHALL BE #10 BARS @ 450mm CENTERS PLACED 40mm CLEAR TO INSIDE OF BOX UNLESS OTHERWISE SHOWN.
6. PIPE(S) MAY BE PLACED IN ANY WALL.
7. DESIGN UNIT STRESSES: F_s = 138 MPa, n= 10, F_c = 10 MPa.
8. CENTER OF RISER SHALL BE LOCATED OVER THE CENTERLINE OF MAIN STORM DRAIN.
9. THICKNESS OF DECK SHALL VARY WHEN NECESSARY TO PROVIDE LEVEL MANHOLE SEAT.
10. BOTTOMS SHALL HAVE A WOOD TROWEL FINISH
11. UPPER PORTION OF TYPE MH WILL BE PAID FOR AS 900mm PRECAST CONCRETE PIPE RISER.
12. NO DEDUCTION IN STRUCTURE CONCRETE QUANTITIES WILL BE MADE FOR PIPE OPENINGS.

* INSTALLED AT WATER QUALITY MONITORING MANHOLE LOCATION ONLY.

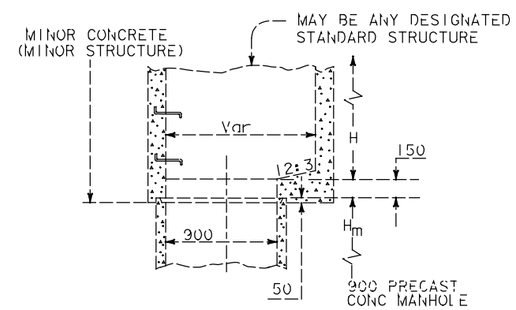

TYPICAL UPPER STRUCTURE AND MANHOLE JUNCTION

UPPER STRUCTURE

WATER QUALITY MONITORING MANHOLE LOCATIONS AND FLUME REQUIREMENT

SYSTEM	UNIT	DESCRIPTION	FLUME
1	e	OUTFLOW	450 PALMER BOWLUS

CCO 23
SHEET 29 OF 39
11-233504
LOCATION 4
MANCHESTER

DRAINAGE DETAILS

NO SCALE

D-12

DESIGN OVERSIGHT: CID TESORO
NPDES
STATE OF CALIFORNIA - DEPARTMENT OF TRANSPORTATION
Caltrans
CALCULATED/DESIGNED BY: AMW DATE 1/99
CHECKED BY: SMT 1/99
REVISED BY / DATE REVISED

FOR REDUCED PLANS ORIGINAL SCALE IN MILLIMETERS 0 20 40 60 80

USERNAME => $$$$$$$USER$$$$$$$
DGN FILE => $$$$$$$$$$$DGNSPEC$$$$$$$$$$$

CU 11516 EA 233501

04-04-99

AS-CONSTRUCTED PLANS

The changes reflected in these AS-CONSTRUCTED PLANS were obtained by conducting a review of the site by RBF field surveyors in June of 2000. The field survey was limited to a review of the surface features and a review of the accessible invert elevations of drainage structures.

RBF is not responsible for the accuracy or completeness of electronic copies of this plan sheet.

Date of AS-CONSTRUCTED PLANS preparation. June 2000

ALL DIMENSIONS ARE IN MILLIMETERS UNLESS OTHERWISE SHOWN

Caltrans Metric

DIST	COUNTY	ROUTE	KILOMETER POST TOTAL PROJECT	SHEET NO.	TOTAL SHEETS
11	SD	5	62.04	15	

REGISTERED CIVIL ENGINEER

APRIL 5, 1999

PLANS APPROVAL DATE

The State of California or its officers or agents shall not be responsible for the accuracy or completeness of electronic copies of this plan sheet.

REGISTERED PROFESSIONAL ENGINEER A.M. WALKER No. 57716 Exp. 12-31-01 CIVIL STATE OF CALIFORNIA

ROBERT BEIN, WILLIAM FROST & ASSOCIATES
14725 ALTON PARKWAY
IRVINE, CA 92618

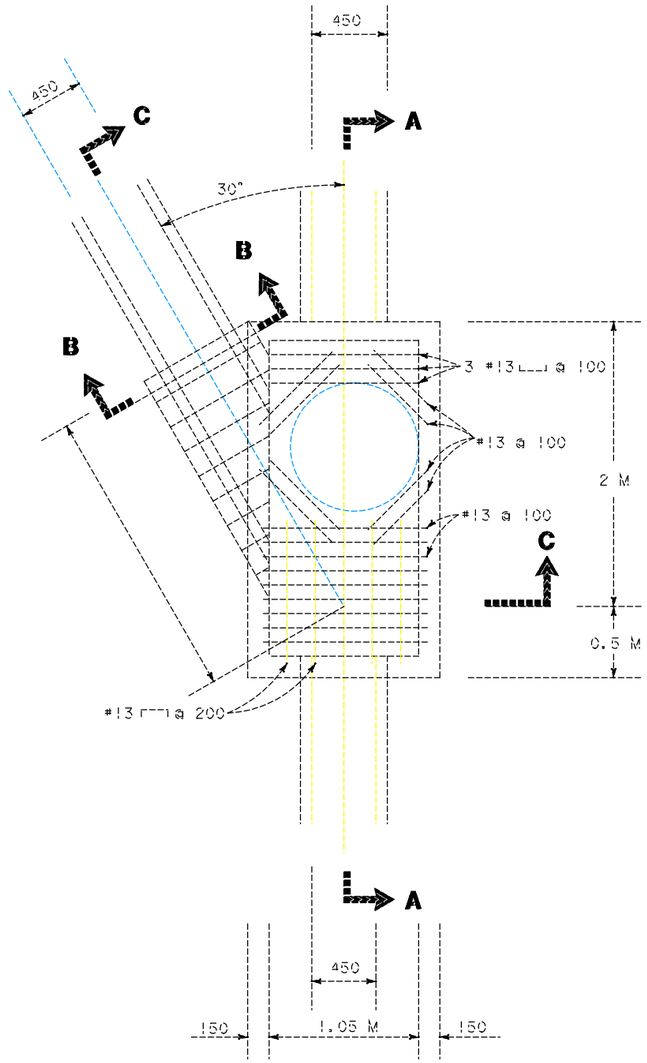

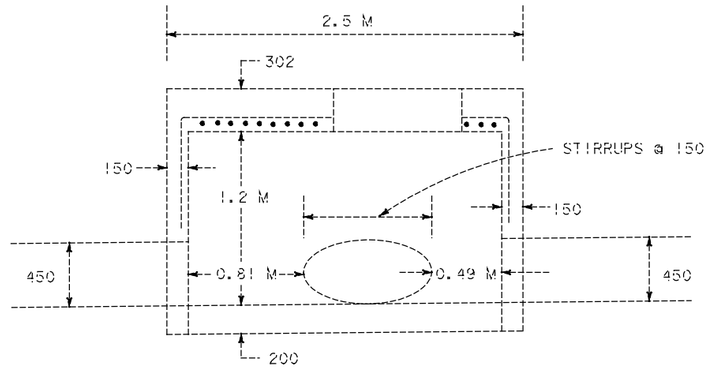

SECTION A-A

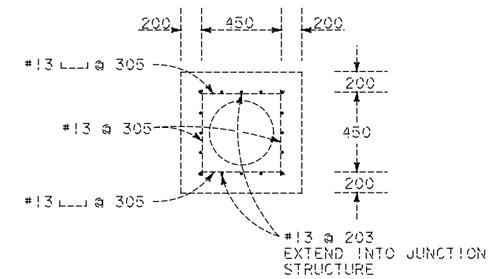

SECTION B-B

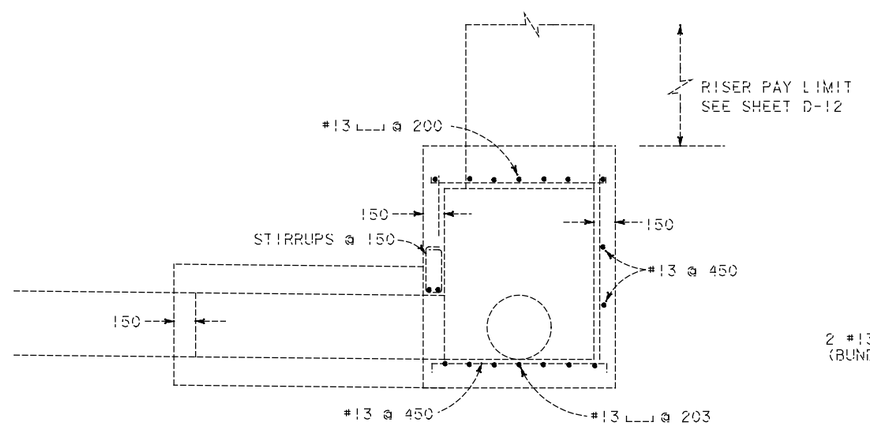

SECTION C-C

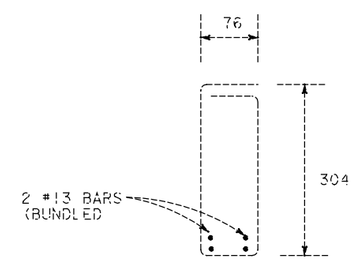

STIRRUPS

NOTE:

REINFORCING STEEL SHALL BE PLACED 40 MM CLEAR TO INSIDE OF BOX.

STORM DRAIN & MANHOLE STRUCTURE (TYPE Y BASE)

CCO 23
SHEET 30 OF 39
11-233504
LOCATION 4
MANCHESTER

DRAINAGE DETAILS

NO SCALE

D-13

04-04-99

CALCULATED/ DESIGNED BY	AMW	DATE 1/99	REVISED BY
CHECKED BY	SMT	1/99	DATE REVISED

DESIGN OVERSIGHT **CID TESORO**

STATE OF CALIFORNIA - DEPARTMENT OF TRANSPORTATION **NPDES**

Caltrans

$DATE$ $TIME$ $FILE$

FOR REDUCED PLANS ORIGINAL SCALE IN MILLIMETERS 0 20 40 60 80

USERNAME => $$$$$$USER$$$$$$
DGN FILE => $$$$$$$$$$DGNSPEC$$$$$$$$$$

CU 11516 EA 233501

DIST	COUNTY	ROUTE	KILOMETER POST TOTAL PROJECT	SHEET NO.	TOTAL SHEETS
11	SD	5	62.04	16	

REGISTERED CIVIL ENGINEER

APRIL 5, 1999

PLANS APPROVAL DATE

The State of California or its officers or agents shall not be responsible for the accuracy or completeness of electronic copies of this plan sheet.

REGISTERED PROFESSIONAL ENGINEER A.M. WALKER No. 57716 Exp. 12-31-01 CIVIL STATE OF CALIFORNIA

ROBERT BEIN, WILLIAM FROST & ASSOCIATES
14725 ALTON PARKWAY
IRVINE, CA 92618

ALL DIMENSIONS ARE IN MILLIMETERS UNLESS OTHERWISE SHOWN

Caltrans Metric

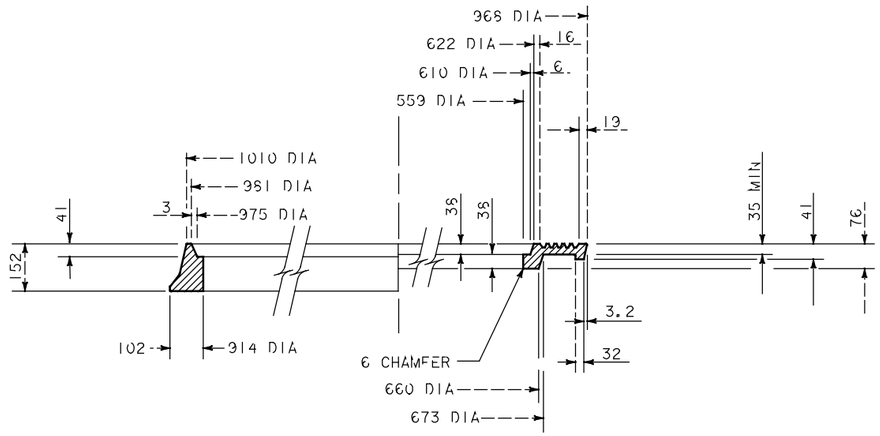

HALF SECTION FRAME AND COVER*

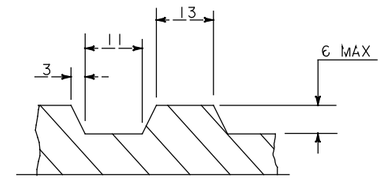

DETAIL A

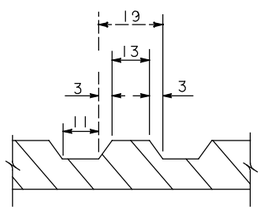

DETAIL B

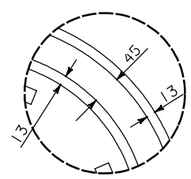

DETAIL C

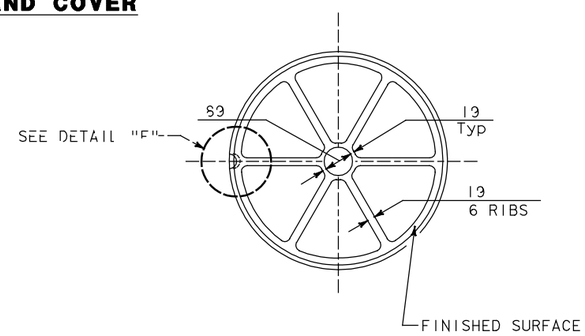

DETAIL E

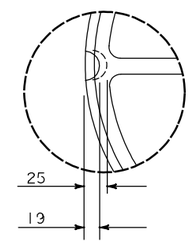

DETAIL F

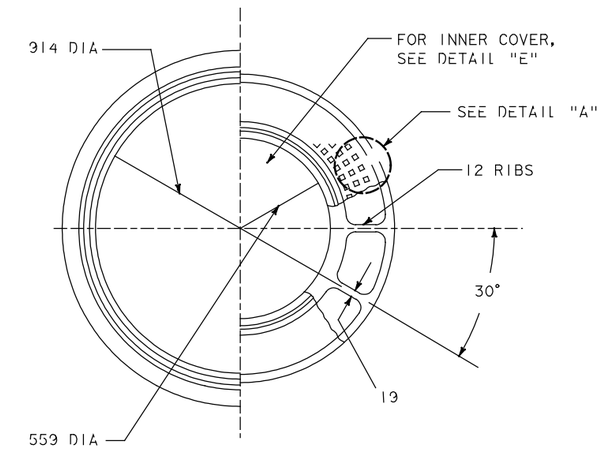

HALF PLAN FRAME AND COVER

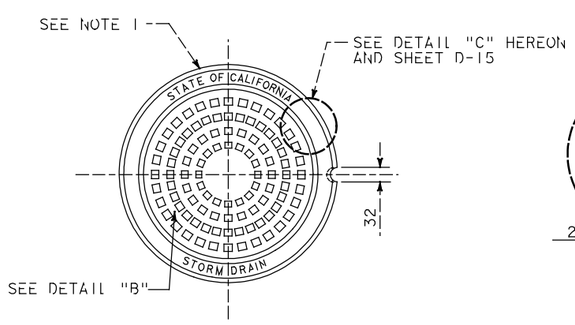

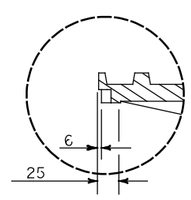

DETAIL D

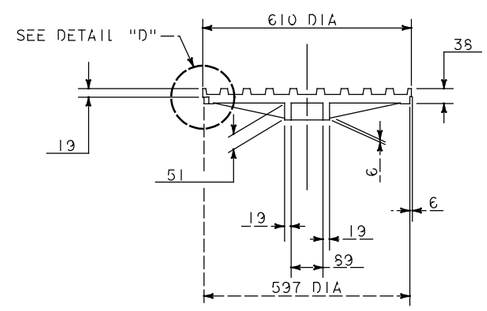

900 MANHOLE FRAME AND TWO CONCENTRIC COVERS *

NOTE:

1. COVER SHALL BE MARKED "STATE OF CALIFORNIA" AND "STORM DRAIN" FOR FRAME AND COVER.

AS-CONSTRUCTED PLANS

The changes reflected in these AS-CONSTRUCTED PLANS were obtained by conducting a review of the site by RBF field surveyors in June of 2000. The field survey was limited to a review of the surface features and a review of the accessible invert elevations of drainage structures.

RBF is not responsible for the accuracy or completeness of electronic copies of this plan sheet.

Date of AS-CONSTRUCTED PLANS preparation. June 2000

CCO 23
SHEET 31 OF 39
11-233504
LOCATION 4
MANCHESTER

DRAINAGE DETAILS

NO SCALE

D-14

04-04-99

STATE OF CALIFORNIA - DEPARTMENT OF TRANSPORTATION
Caltrans
NPDES
DESIGN OVERSIGHT
CID TESORO
CALCULATED/DESIGNED BY AMW DATE 1/99
CHECKED BY SMT 1/99
REVISED BY
DATE REVISED

FOR REDUCED PLANS ORIGINAL SCALE IN MILLIMETERS 0 20 40 60 80

USERNAME => $$$$$$USER$$$$$$
DGN FILE => $$$$$$$$$$$DGNSPEC$$$$$$$$$$$

CU 11516

EA 233501

ALL DIMENSIONS ARE IN MILLIMETERS UNLESS OTHERWISE SHOWN

DIST	COUNTY	ROUTE	KILOMETER POST TOTAL PROJECT	SHEET NO.	TOTAL SHEETS
11	SD	5	62.04	17	

REGISTERED CIVIL ENGINEER

APRIL 5, 1999

PLANS APPROVAL DATE

A.M. WALKER No. 57716 Exp. 12-31-01 CIVIL STATE OF CALIFORNIA REGISTERED PROFESSIONAL ENGINEER

The State of California or its officers or agents shall not be responsible for the accuracy or completeness of electronic copies of this plan sheet.

ROBERT BEIN, WILLIAM FROST & ASSOCIATES
14725 ALTON PARKWAY
IRVINE, CA 92618

AS-CONSTRUCTED PLANS

The changes reflected in these AS-CONSTRUCTED PLANS were obtained by conducting a review of the site by RBF field surveyors in June of 2000. The field survey was limited to a review of the surface features and a review of the accessible invert elevations of drainage structures.

RBF is not responsible for the accuracy or completeness of electronic copies of this plan sheet.

Date of AS-CONSTRUCTED PLANS preparation: June 2000

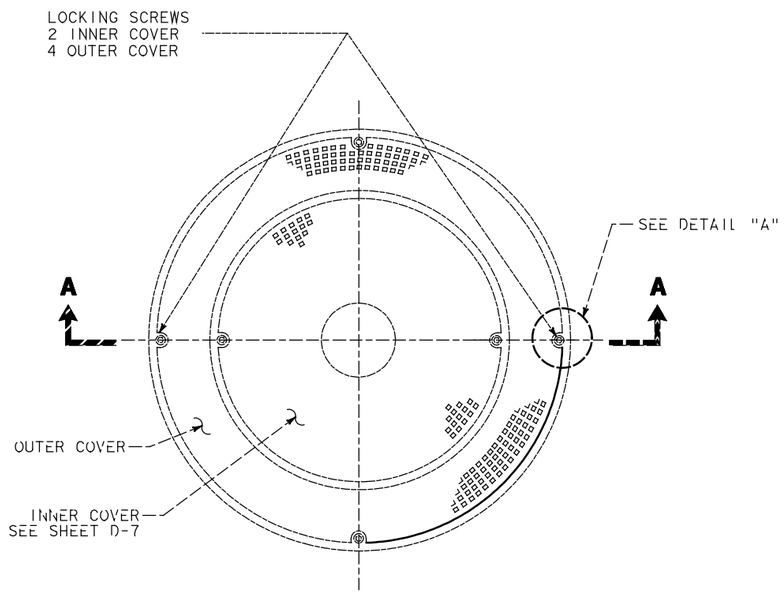

PLAN

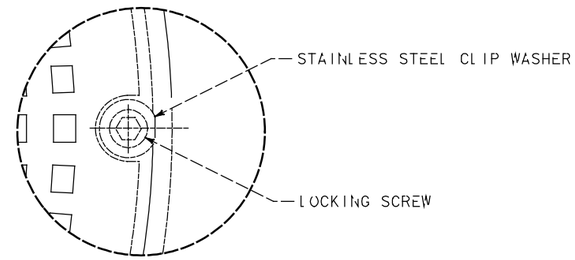

DETAIL A

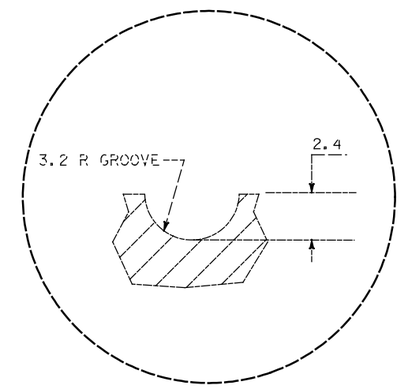

DETAIL C

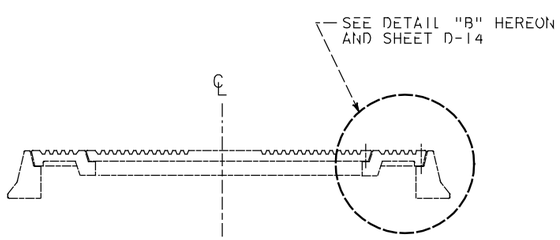

SECTION A-A

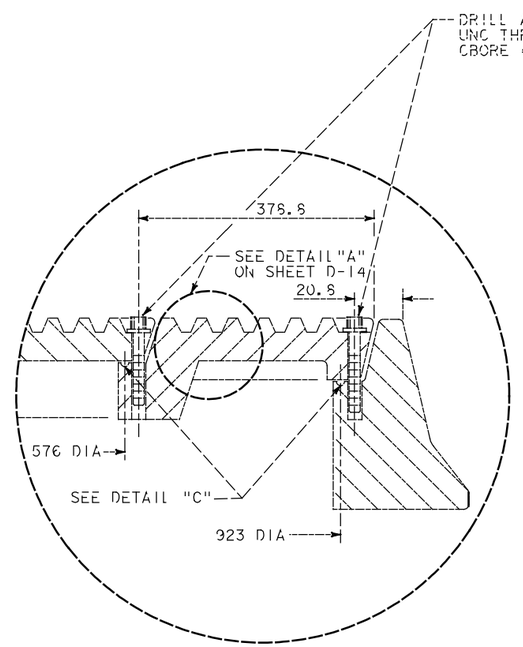

DETAIL B

MANHOLE COVER LOCK *

NOTES:

1. 15.9 X 20 UNC THREAD, 316 STAINLESS STEEL SOCKET HEAD CAP SCREW AND 38.1 O.D. X 17.5 I.D. X 2.0 THICK 316 STAINLESS STEEL WASHER
2. 6.3 NEOPRENE O-RING GASKET SHALL BE GLUED INTO MACHINED GROOVE(DETAIL "C"). GLUE SHALL MEET THE REQUIREMENTS OF MIL-M-81288
3. BOLTDOWN PATTERNS:
   A. BETWEEN INNER AND OUTER COVERS INSTALL TWO BOLTS AT 180°.
   B. BETWEEN OUTER COVER AND FRAME INSTALL FOUR BOLTS AT 90°.

* STAINLESS STEEL AT WATER QUALITY MONITORING MH LOCATIONS. SEE SHEET D-12.

CCO 23
SHEET 32 OF 39
11-233504
LOCATION 4
MANCHESTER

DRAINAGE DETAILS

NO SCALE

D-15

04-04-99

DATE	REVISED BY	DATE REVISED

CALCULATED/DESIGNED BY: AMW DATE 1/99
CHECKED BY: SMT 1/99

DESIGN OVERSIGHT: CID TESORO

STATE OF CALIFORNIA - DEPARTMENT OF TRANSPORTATION
NPDES
Caltrans

FOR REDUCED PLANS ORIGINAL SCALE IN MILLIMETERS 0 20 40 60 80

USERNAME => $$$$$$$USER$$$$$$$
DGN FILE => $$$$$$$$$$$DGNSPEC$$$$$$$$$$$

CU 11516 EA 233501

DIST	COUNTY	ROUTE	KILOMETER POST TOTAL PROJECT	SHEET NO.	TOTAL SHEETS
11	SD	5	62.04	18	

REGISTERED CIVIL ENGINEER

APRIL 5, 1999
PLANS APPROVAL DATE

REGISTERED PROFESSIONAL ENGINEER A.M. WALKER No. 57716 Exp. 12-31-01 CIVIL STATE OF CALIFORNIA

The State of California or its officers or agents shall not be responsible for the accuracy or completeness of electronic copies of this plan sheet.

ROBERT BEIN, WILLIAM FROST & ASSOCIATES
14725 ALTON PARKWAY
IRVINE, CA 92618

APC ALLOWABLE PIPE MATERIAL AND PROTECTION

DESIGNATION	RCP *	PLASTIC	
	SIZE	SIZE	TYPE
450 mm APC	450 mm	450 mm	(S)
600 mm APC	600 mm	600 mm	(S)

* FOR MINIMUM ALLOWABLE CLASS OF RCP SEE CALTRANS STANDARD PLAN A62D.

LEGEND AND ABBREVIATIONS

BKF - BACKFILL
S - STANDARD JOINT TYPE
(S) - SMOOTH INSIDE WALL
WQM - WATER QUALITY MONITORING
WTJ - WATERTIGHT JOINT

AS-CONSTRUCTED PLANS

The changes reflected in these AS-CONSTRUCTED PLANS were obtained by conducting a review of the site by RBF field surveyors in June of 2000. The field survey was limited to a review of the surface features and a review of the accessible invert elevations of drainage structures.

RBF is not responsible for the accuracy or completeness of electronic copies of this plan sheet.

Date of AS-CONSTRUCTED PLANS preparation. June 2000

CCO 23
SHEET 33 OF 39
11-233504
LOCATION 4
MANCHESTER

DRAINAGE SYSTEM NO	DRAINAGE UNIT	MODIFY EXISTING INLET SALVAGE GRATE	MINOR CONCRETE (BACKFILL)	CONCRETE (DITCH LINING)	MINOR CONCRETE (MINOR STRUCTURE)	MINOR CONCRETE (MISC CONSTRUCTION)	MISC IRON AND STEEL	STAINLESS STEEL WIRE FABRIC AND DEBRIS SCREEN	FRAMES, GRATES AND COVERS (N): DEBRIS RACK CAGE (STAINLESS STEEL)	DEBRIS RACK CAGE	TYPE 600-9	TYPE 600-12	TYPE 900R	CHECKERED PLATE (STAINLESS STEEL)	MH FRAME & COVER	RSP: BACKING No. 2, METHOD B	FABRIC	PVC (N): 50 mm	APC: 450 mm	600 mm	PCP: 900 mm PRECAST CONCRETE PIPE RISER	ALUMINIZED CSP 3.51 mm: 450 mm	1200 mm CSP INLET	(N): PIPE JOINT CLASSIFICATION	INSTALL CANAL GATE (STAINLESS STEEL)	(N): 450 mm PALMER ROMLUS FLUME	(N): HEIGHT OF INLET "H"	(N): MAXIMUM COVER	DESCRIPTION	LOCATION	DRAINAGE SYSTEM NO	DRAINAGE UNIT
		EA	m3	m3	m3	m3	kg	EA	EA	EA	EA	EA	EA	EA	EA	m3	m2	m	m	m	m	m	m		EA	EA	m	m				
1	a				4.61		300								1						0.90						0.9		MH/TYPE Y BASE	N594074.6444/E1905244.6483	1	a
	b																		12.95					WTJ				1.6	450mm APC			b
	c				1.7		300								1						0.70						0.7		MH/TYPE X BASE	N594083.2089/E1905233.1010		c
	d																		45.78					WTJ				1.9	450mm APC			d
	e				1.7		300							1							1.23					1	1.23		WQM MH TYPE X BASE	N594127.2384/E1905216.2742		e
	f																	2.5										0.45	50mm PVC			f
	g				1.22																								CONC MONITORING PAD	N594124.8914/E1905214.4908		g
	h																		9.91					WTJ				2	450mm APC			h
	i					0.99	215	1	1	1												0.6	2.44		1		2.18		MOD GMP, W/CANAL GATE *	N594136.6373/E1905212.6872		i
	j																		3.09									1.2	450mm APC			j
	k				1.0		119				1																1.48		G1 INLET	N594081.5866/E1905229.5767		k
2	aa				1.68																								CONCRETE APRON		2	aa
	a				0.68		26																						CONC HW, H=960, L=2100	N594143.4679/E1905231.8374		a
	b																		8.5					WTJ				0.4	450mm APC			b
	c					0.6	300							1							1.4						1.25		WQM PCP INLET	N594141.1830/E1905240.3303		c
	d																	2.5						S				0.45	50mm PVC			d
	e				1.22																								CONC MONITORING PAD	N594138.0156/E1905239.8736		e
	f																		5.55					WTJ				1.1	450mm APC			f
	g					0.5	107						1								0.68						0.68		PCP INLET TYPE GCP	N594139.5082/E19052446.5551		g
	h		7.05																11.23					WTJ				0.3	450mm APC W/CONC BKF			h
	i				0.69		190					1															0.78		G1 INLET/RESTRICTOR PLATE	N594136.5928/E1905258.1172		i
	j			13.5																									CONC TRAP DITCH			j
	k				0.90		34																						CONC HW, H=1110, L=2550	N594151.6477/E1905188.6857		k
	l																			33.64				S				1.8	600mm APC			l
	m				1.7		113								1						1.26						1.26		MH/TYPE X BASE	N594139.8097/E1905156.5999		m
	n					0.32														27.38				S				1.5	600 mm APC			n
	o				1.7		149						1								0.3						0.3		MH/TYPE X BASE, 900R GRATE WITH RESTRICTOR PLATE	N594137.1189/E1905128.4400		o
	p																		84.21					S				1.9	450mm APC			p
	q				1.03		42																				1.4		G3 INLET/RESTRICTOR PLATE USE EXISTING GRATE	N594066.6045/E1905200.1243		q
	r									1										1.6				S					600 APC			r
	s	1				0.52																							MODIFY EXIST INLET			s
3	a															26.82	64.9												RSP		3	a
	b				6.57																								CONCRETE SPILLWAY			b
TOTAL		1	7.05	13.5		2.93	2195	1	1	1	2	1	2	2	3	26.82	64.9	5	181.2	62.62	6.5	0.6	2.44		1	1	TOTAL					
				SUBTOTAL	23.49	SEE SHEET Q-1 FOR ADDITIONAL MINOR CONCRETE (MINOR STRUCTURE)																											

(N) NOT A SEPARATE PAY ITEM, FOR INFORMATION ONLY

* WITH ORIFICE, MOD CONC APRON AND CANAL GATE

DRAINAGE QUANTITIES

D-16

CALCULATED/DESIGNED BY AMW DATE 1/99 REVISED BY
CHECKED BY SMT 1/99 DATE REVISED
DESIGN OVERSIGHT CID TESORO
STATE OF CALIFORNIA - DEPARTMENT OF TRANSPORTATION
NPDES
Caltrans
#DATE #TIMES #FILE

FOR REDUCED PLANS ORIGINAL SCALE IN MILLIMETERS 0 20 40 60 80
USERNAME => $$$$$$USER$$$$$$
DGN FILE => $$$$$$$$$$DGNSPEC$$$$$$$$$$
CU 11516
EA 233501

04-04-99

DIST	COUNTY	ROUTE	KILOMETER POST TOTAL PROJECT	SHEET NO.	TOTAL SHEETS
11	SD	5	62.04	19	

REGISTERED CIVIL ENGINEER

3-13-97

PLANS APPROVAL DATE

REGISTERED PROFESSIONAL ENGINEER
R. J. MOREAU
No. 17623
Exp. 06-30-00
CIVIL
STATE OF CALIFORNIA

The State of California or its officers or agents shall not be responsible for the accuracy or completeness of electronic copies of this plan sheet.

Caltrans Metric

SYMBOL	COMPANY	TYPE OF FACILITY
------E----------	SDG&E	UNDERGROUND 12 KV ELECTRIC
-----W----------W	SAN ELIJO WATER	WATER
-----W----------W	OLIVENHAIN WATER DISTRICT	WATER
-----S----------	CITY OF ESCONDIDO WATER DISTRICT	SEWER
-----S----------	CITY OF ENCINITAS	SEWER

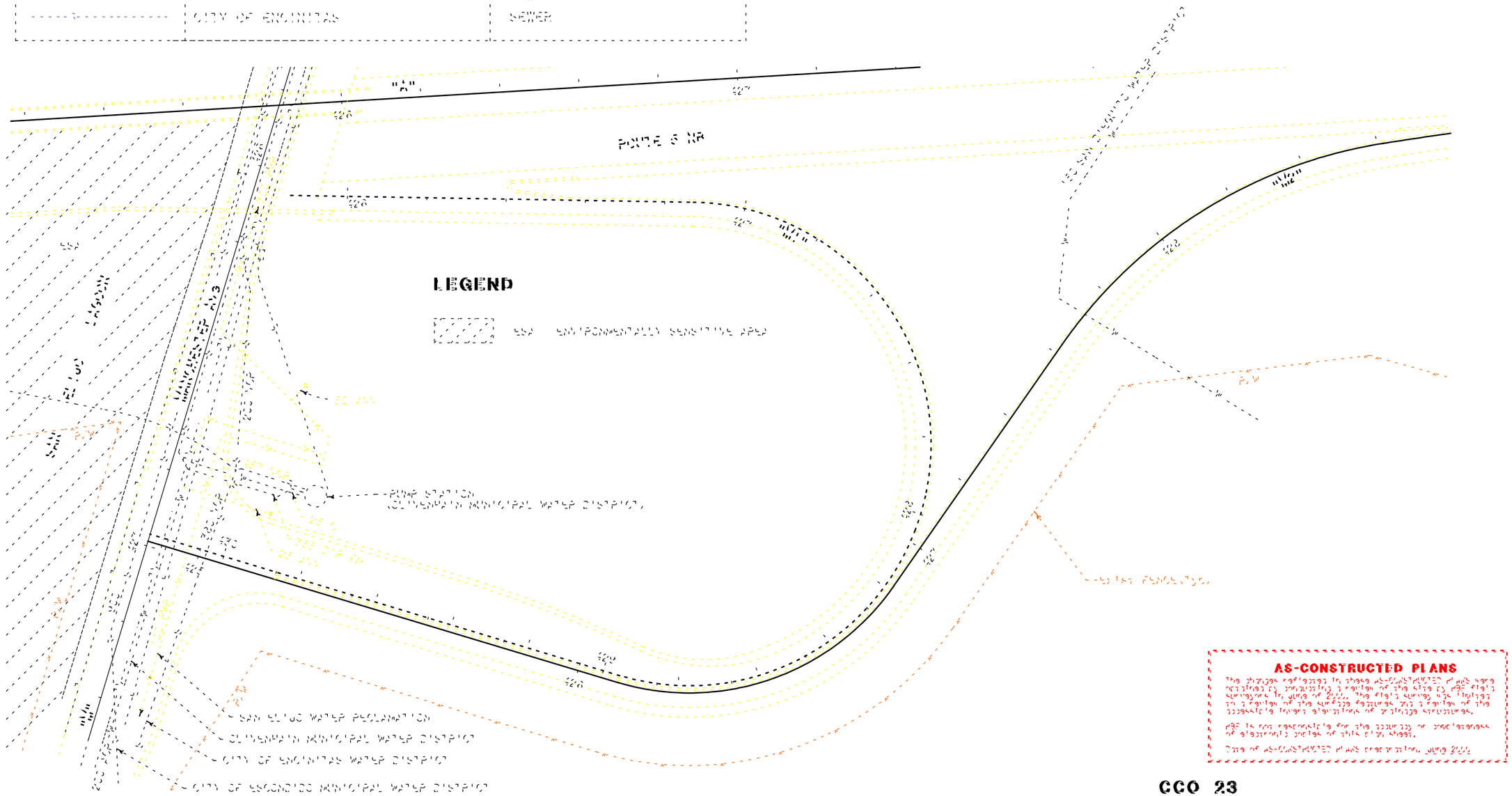

ALL DIMENSIONS ARE IN MILLIMETERS
UNLESS OTHERWISE SHOWN.

NOTE: THIS PLAN ACCURATE FOR EXISTING UTILITIES ONLY.

AS-CONSTRUCTED PLANS

The changes reflected in these AS-CONSTRUCTED PLANS were obtained by conducting a review of the site by PBF field surveyors in June of 2000. The field survey was limited to a review of the surface features and a review of the accessible invert elevations of drainage structures.

PBF is not responsible for the accuracy or completeness of electronic copies of this plan sheet.

Date of AS-CONSTRUCTED PLANS preparation: June 2000

CCO 23
SHEET 34 OF 39
11-233504
LOCATION 4
MANCHESTER

UTILITIES

SCALE = 1:500 **U-1**

STATE OF CALIFORNIA - DEPARTMENT OF TRANSPORTATION
Caltrans ENGINEERING SERVICES

PROJECT ENGINEER
ROY MOREAU

CALCULATED/DESIGNED BY
CHECKED BY

DATE
REVISED BY
DATE REVISED

TIME PLOTTED => $$$$$$SYTIME$$$$$$

LAST REVISION 04-04-99

FOR REDUCED PLANS ORIGINAL SCALE IS IN MILLIMETERS 0 20 40 60 80

USERNAME => $$$$$$USER$$$$$$
DGN FILE => $$$$$$$$$$DGNSPEC$$$$$$$$$$

CU 11518

EA 233501

DIST	COUNTY	ROUTE	KILOMETER POST TOTAL PROJECT	SHEET No.	TOTAL SHEETS
11	SD	5	62.04	20	

REGISTERED CIVIL ENGINEER DATE

APRIL 5, 1999

PLANS APPROVAL DATE

REGISTERED PROFESSIONAL ENGINEER J.P. SIMS No. 49715 Exp. 9-30-00 CIVIL STATE OF CALIFORNIA

The State of California or its officers or agents shall not be responsible for the accuracy or completeness of electronic copies of this plan sheet.

Caltrans Metric

AS-CONSTRUCTED PLANS

The changes reflected in these AS-CONSTRUCTED PLANS were obtained by conducting a review of the site by RBF field surveyors in June of 2000. The field survey was limited to a review of the surface features and a review of the accessible invert elevations of drainage structures.

RBF is not responsible for the accuracy or completeness of electronic copies of this plan sheet.

Date of AS-CONSTRUCTED PLANS preparation. June 2000

LEGEND

XX = CONSTRUCTION AREA SIGN

= DIRECTION OF TRAVEL

= CONSTRUCTION AREA

ESA ENVIRONMENTALLY SENSITIVE AREA

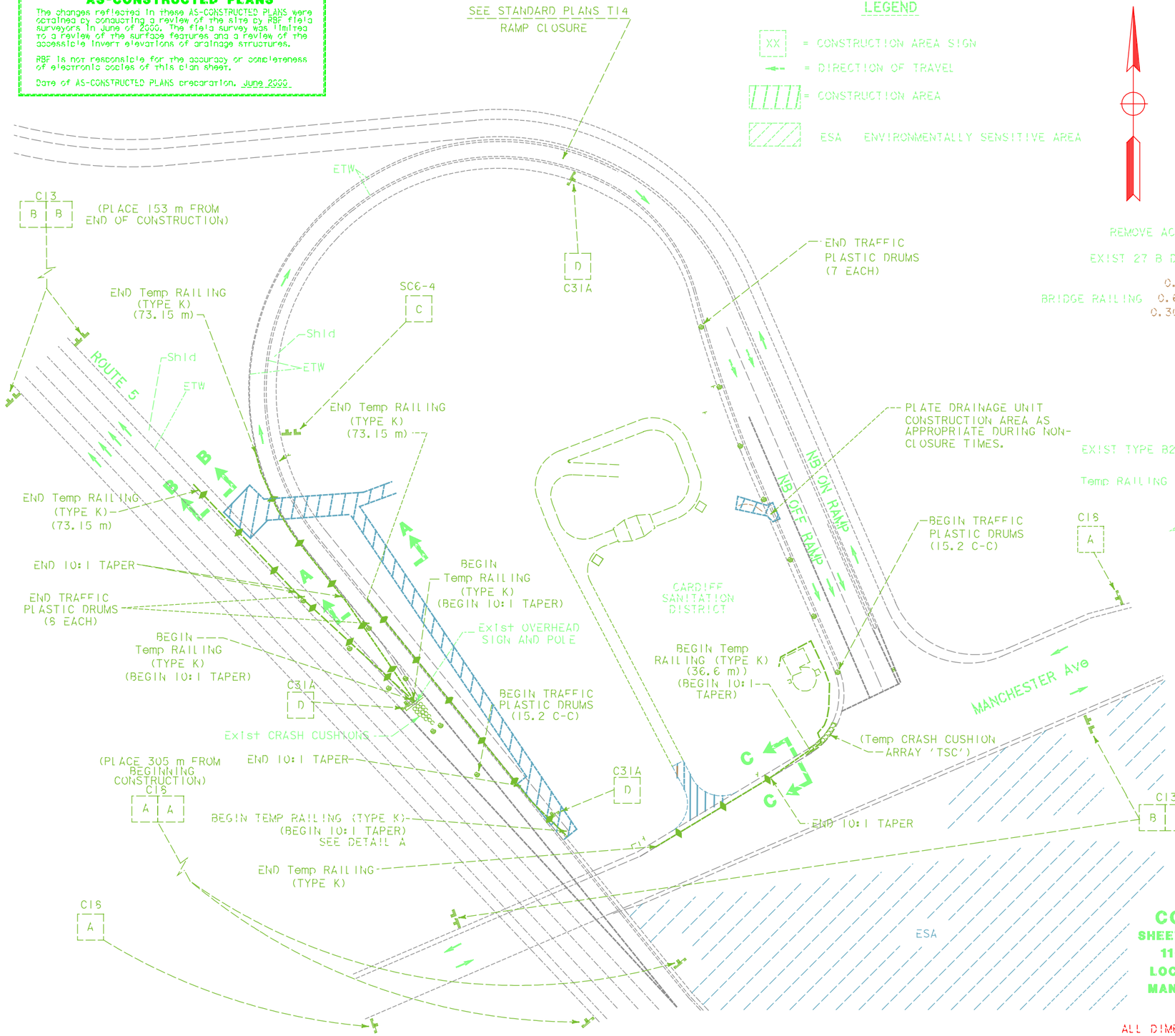

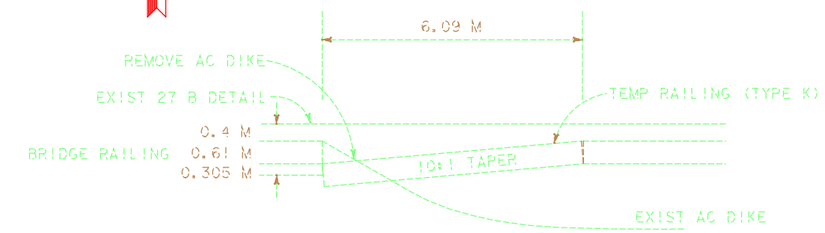

DETAIL A

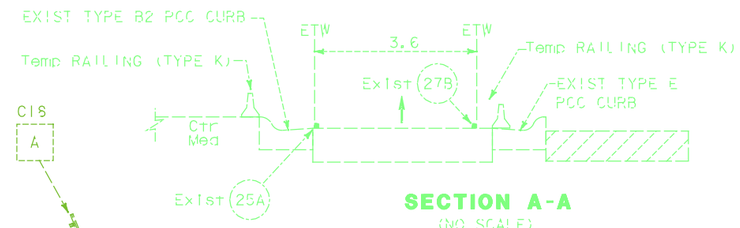

SECTION A-A

(NO SCALE)

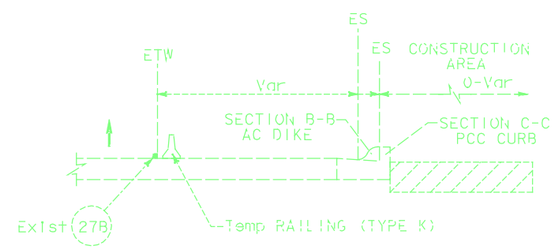

SECTION B-B AND C-C

(NO SCALE)

CCO 23
SHEET 35 OF 39
11-233504
LOCATION 4
MANCHESTER

CONSTRUCTION AREA SIGN AND TRAFFIC HANDLING PLAN

ALL DIMENSIONS ARE IN METERS UNLESS OTHERWISE SHOWN.

SCALE 1:500

CS-1

NOTE: THIS SHEET ACCURATE FOR CONSTRUCTION AREA SIGNS AND TRAFFIC HANDLING ONLY.

STATE OF CALIFORNIA - DEPARTMENT OF TRANSPORTATION

Caltrans **TRAFFIC**

PROJECT ENGINEER **J.P. SIMS**

CALCULATED/DESIGNED BY | CHECKED BY | DATE REVISED BY | DATE REVISED

FOR REDUCED PLANS ORIGINAL SCALE IS IN MILLIMETERS 0 20 40 60 80

USERNAME => $USER
DGN FILE => $REQUEST

CU 11516 | EA 233501

LAST REVISION | DATE PLOTTED => $DATE | TIME PLOTTED => $TIME

DIST	COUNTY	ROUTE	KILOMETER POST TOTAL PROJECT	SHEET No.	TOTAL SHEETS
11	SD	5	62.04	21	

REGISTERED CIVIL ENGINEER DATE

APRIL 5, 1999

PLANS APPROVAL DATE

REGISTERED PROFESSIONAL ENGINEER J.P. SIMS No. 49715 Exp. 9-30-00 CIVIL STATE OF CALIFORNIA

The State of California or its officers or agents shall not be responsible for the accuracy or completeness of electronic copies of this plan sheet.

Caltrans Metric

CONSTRUCTION AREA SIGNS

SIGN	TYPE	PANEL SIZE (mm X mm)	NO. OF POST AND SIZE (mm X mm)	EACH
A	C18	1219 X 1219	1-89 X 140	4
B	C13	1524 X 610	2-89 X 89	4
C	SC6-4	1219 X 1524	PORTABLE	1
D	C31A	1219 X 1219	PORTABLE	3
			TOTAL =	12

TYPICAL- PLACEMENT OF TRAFFIC PLASTIC DRUM

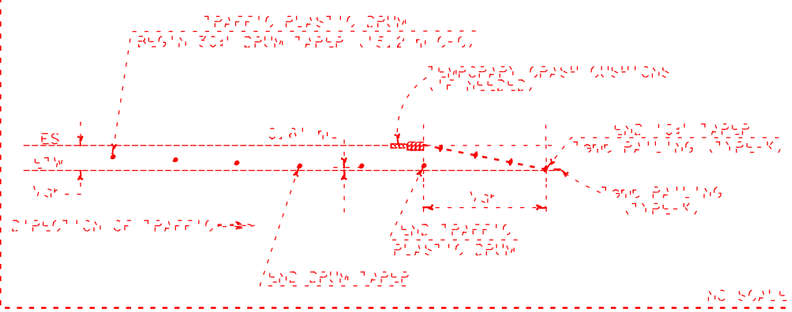

TEMPORARY CRASH CUSHION MODULES

LOCATION	ARRAY	EA
MANCHESTER AVE	ITSCC	8
	TOTAL =	8

TEMPORARY RAILING (TYPE K)

LOCATION	METERS
ROUTE 5	73.15
OFF-RAMP	73.15
MANCHESTER AVE	36.6
OFF-RAMP	73.15
TOTAL	256.05

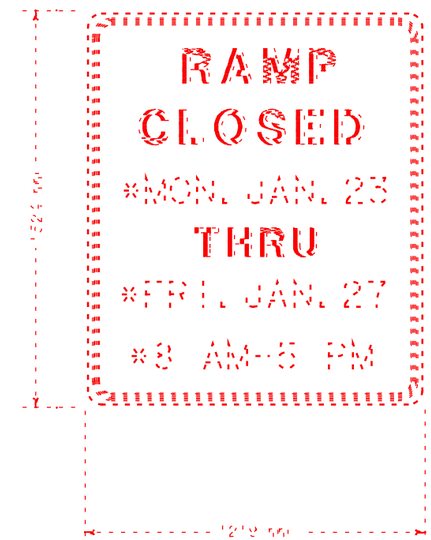

SC6-4

*NOTE: Days, Dates and Times will vary, specify when ordering.

TRAFFIC PLASTIC DRUMS

LOCATION	EACH
OFF-RAMP GORE	8
OFF-RAMP	7
TOTAL =	15

AS-CONSTRUCTED PLANS

The changes reflected in these AS-CONSTRUCTED PLANS were obtained by conducting a review of the site by PBF field surveyors in June of 2000. The field survey was limited to a review of the surface features and a review of the accessible invert elevations of drainage structures.

PBF is not responsible for the accuracy or completeness of electronic copies of this plan sheet.

Date of AS-CONSTRUCTED PLANS preparation: June 2000

CCO 23
SHEET 36 OF 39
11-233504
LOCATION 4
MANCHESTER

CONSTRUCTION AREA SIGN AND TRAFFIC HANDLING DETAILS AND QUANTITIES

ALL DIMENSIONS ARE IN METERS UNLESS OTHERWISE SHOWN.

CS-2

STATE OF CALIFORNIA - DEPARTMENT OF TRANSPORTATION
Caltrans
TRAFFIC
PROJECT ENGINEER J.P. SIMS
CALCULATED/DESIGNED BY
CHECKED BY
DATE
REVISED BY
DATE REVISED

LAST REVISION 04-04-99
DATE PLOTTED => $DATE
TIME PLOTTED => $TIME

FOR REDUCED PLANS ORIGINAL SCALE IS IN MILLIMETERS 0 20 40 60 80
USERNAME => $USER
DGN FILE => $REQUEST
CU 11516
EA 233501

ALL DIMENSIONS ARE IN METERS UNLESS OTHERWISE SHOWN

Caltrans Metric

DIST	COUNTY	ROUTE	KILOMETER POST TOTAL PROJECT	SHEET NO.	TOTAL SHEETS
11	SD	5	62.04	22	

REGISTERED CIVIL ENGINEER

APRIL 5, 1999

PLANS APPROVAL DATE

The State of California or its officers or agents shall not be responsible for the accuracy or completeness of electronic copies of this plan sheet.

REGISTERED PROFESSIONAL ENGINEER A.M. WALKER No. 57716 Exp. 12-31-01 CIVIL STATE OF CALIFORNIA

ROBERT BEIN, WILLIAM FROST & ASSOCIATES
14725 ALTON PARKWAY
IRVINE, CA 92618

AS-CONSTRUCTED PLANS

The changes reflected in these AS-CONSTRUCTED PLANS were obtained by conducting a review of the site by RBF field surveyors in June of 2000. The field survey was limited to a review of the surface features and a review of the accessible invert elevations of drainage structures.

RBF is not responsible for the accuracy or completeness of electronic copies of this plan sheet.

Date of AS-CONSTRUCTED PLANS preparation. June 2000

ROADWAY ITEMS

DESCRIPTION	SHEET	LENGTH m	AREA m^2	AC (TYPE A) TONNES	AB (CLASS 2) m^3
ACCESS ROAD	D-1	-	-	93.28	79.64
AC DIKE (TYPE A)	D-1	84	-	6.65	-
AC DIKE (TYPE A)	D-2	15	-	1.19	-
AC DIKE (TYPE E)	D-2	40	-	2.59	-
MISC AC OVERSIDE DRAIN	D-2	-	7.6	1.1	-
MISC AC -APRON	D-2	-	24.15	3.5	-
	TOTAL	139	31.75	108.31	79.64

MINOR CONCRETE (PCC CURBS)

DESCRIPTION	SHEET	VOLUME m^3
PCC CURB TYPE B2	D-2	0.456
PCC CURB TYPE E	D-2	0.483
	TOTAL	0.94

EARTHWORK

DESCRIPTION	SHEET	ROADWAY EXCAVATION VOLUME m^3	ROADWAY EMBANKMENT (N) VOLUME m^3	IMPORT MATERIAL VOLUME m^3
ROADWAY EXCAVATION	D-2	1340	-	-
ROADWAY EMBANKMENT	D-1, D-2	-	1535	-
BASIN OVEREXCAVATION	D-1, X-1	195	-	195
	TOTAL	1535	1535	195

(N) NOT A PAY ITEM, FOR INFORMATION ONLY

CHAIN LINK GATE (CL-1.8)

DESCRIPTION	SHEET	EACH
TYPE CL 1.8	D-1	1
	TOTAL	1

EROSION CONTROL (TYPE D)

DESCRIPTION	SHEET	HA
LOCATION 4	D-1, D-2	1.5
	TOTAL	1.5

MINOR CONCRETE (MINOR STRUCTURE)

DESCRIPTION	SHEET	LENGTH m	VOLUME m^3
CONCRETE ACCESS RAMP	D-1, D11	12.21	7.8
		SUBTOTAL	7.8
		SUBTOTAL FROM SHEET D-15	23.49
		TOTAL	31.29

CCO 23
SHEET 37 OF 39
11-233504
LOCATION 4
MANCHESTER

SUMMARY OF QUANTITIES

Q-1

04-04-99

STATE OF CALIFORNIA - DEPARTMENT OF TRANSPORTATION
Caltrans
NPDES
CID TESORO
DESIGN OVERSIGHT
CALCULATED/DESIGNED BY AMW DATE 1/99 REVISED BY
CHECKED BY MC 1/99 DATE REVISED

FOR REDUCED PLANS ORIGINAL SCALE IN MILLIMETERS 0 20 40 60 80

USERNAME => $$$$$$USER$$$$$$
DGN FILE => $$$$$$$$$$$DGNSPEC$$$$$$$$$$$

CU 11516 EA 233501

DIST	COUNTY	ROUTE	KILOMETER POST TOTAL PROJECT	SHEET NO.	TOTAL SHEETS
11	SD	5	62.04	23	

REGISTERED ELECTRICAL ENGINEER

APRIL 5, 1999
PLANS APPROVAL DATE

E. P. BERNAL
No. 15675
Exp. 6-30-02
ELECTRICAL
REGISTERED PROFESSIONAL ENGINEER
STATE OF CALIFORNIA

The State of California or its officers or agents shall not be responsible for the accuracy or completeness of electronic copies of this plan sheet

Caltrans Metric

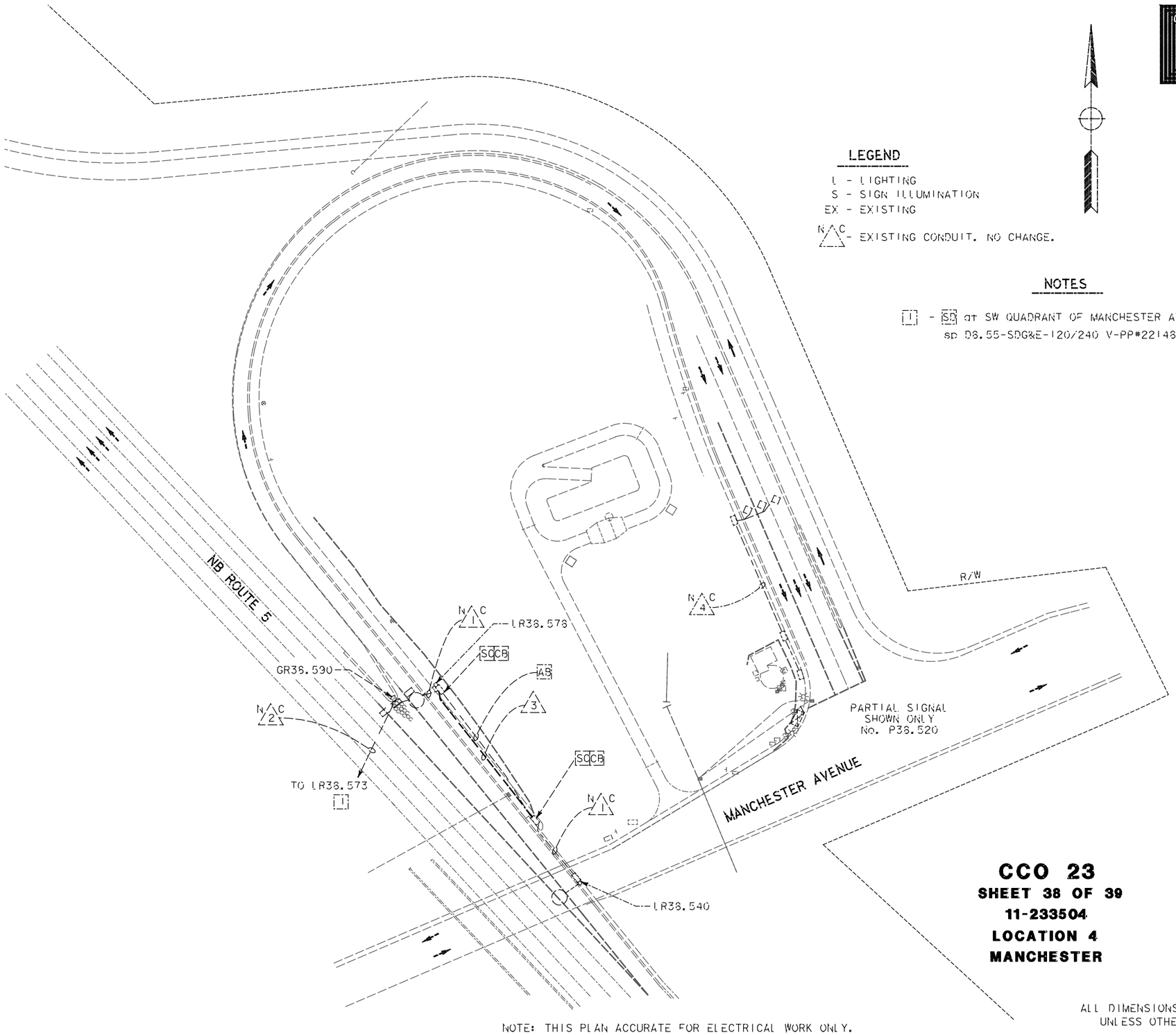

LEGEND

L - LIGHTING
S - SIGN ILLUMINATION
EX - EXISTING
N C - EXISTING CONDUIT. NO CHANGE.

NOTES

1 - SD at SW QUADRANT OF MANCHESTER AVENUE.
sp D8.55-SDG&E-120/240 V-PP#221488

CONDUIT NOTES

N C 1 - EX 4IC, 2#10(L).
N C 2 - EX 4IC, 2#8(L&S), 1#10(L&S).
3 - 53C, 2#10(L).
N C 4 - EX 4IC, 3 alc.

AS-CONSTRUCTED PLANS

The changes reflected in these AS-CONSTRUCTED PLANS were obtained by conducting a review of the site by RBF field surveyors in June of 2000. The field survey was limited to a review of the surface features and a review of the accessible invert elevations of drainage structures.

RBF is not responsible for the accuracy or completeness of electronic copies of this plan sheet.

Date of AS-CONSTRUCTED PLANS preparation. June 2000

CCO 23
SHEET 38 OF 39
11-233504
LOCATION 4
MANCHESTER

LIGHTING AND SIGN ILLUMINATION (MODIFY)

ALL DIMENSIONS ARE IN METERS UNLESS OTHERWISE SHOWN.

SCALE 1:500

NOTE: THIS PLAN ACCURATE FOR ELECTRICAL WORK ONLY.

E-1

STATE OF CALIFORNIA - DEPARTMENT OF TRANSPORTATION
Caltrans
TRAFFIC ELECTRICAL

PROJECT ENGINEER **ENRIQUE P. BERNAL**

CALCULATED/DESIGNED BY
CHECKED BY

DATE | REVISED BY | DATE REVISED

LAST REVISION 04-04-99 | DATE PLOTTED => $DATE | TIME PLOTTED => $TIME

FOR REDUCED PLANS ORIGINAL SCALE IS IN MILLIMETERS 0 20 40 60 80

USERNAME => $USER
DGN FILE => $REQUEST

CU 11516 | EA 233501

DIST	COUNTY	ROUTE	KILOMETER POST TOTAL PROJECT	SHEET NO.	TOTAL SHEETS
11	SD	5	62.04	24	

LICENSED LANDSCAPE ARCHITECT

APRIL 5, 1999
PLANS APPROVAL DATE

LICENSED LANDSCAPE ARCHITECT EMILIO L. VIRAMONTES No. 3534 STATE OF CALIFORNIA
Signature
12-21-91
Renewal Date
4-5-99
Date

The State of California or its officers or agents shall not be responsible for the accuracy or completeness of electronic copies of this plan sheet.

Caltrans Metric

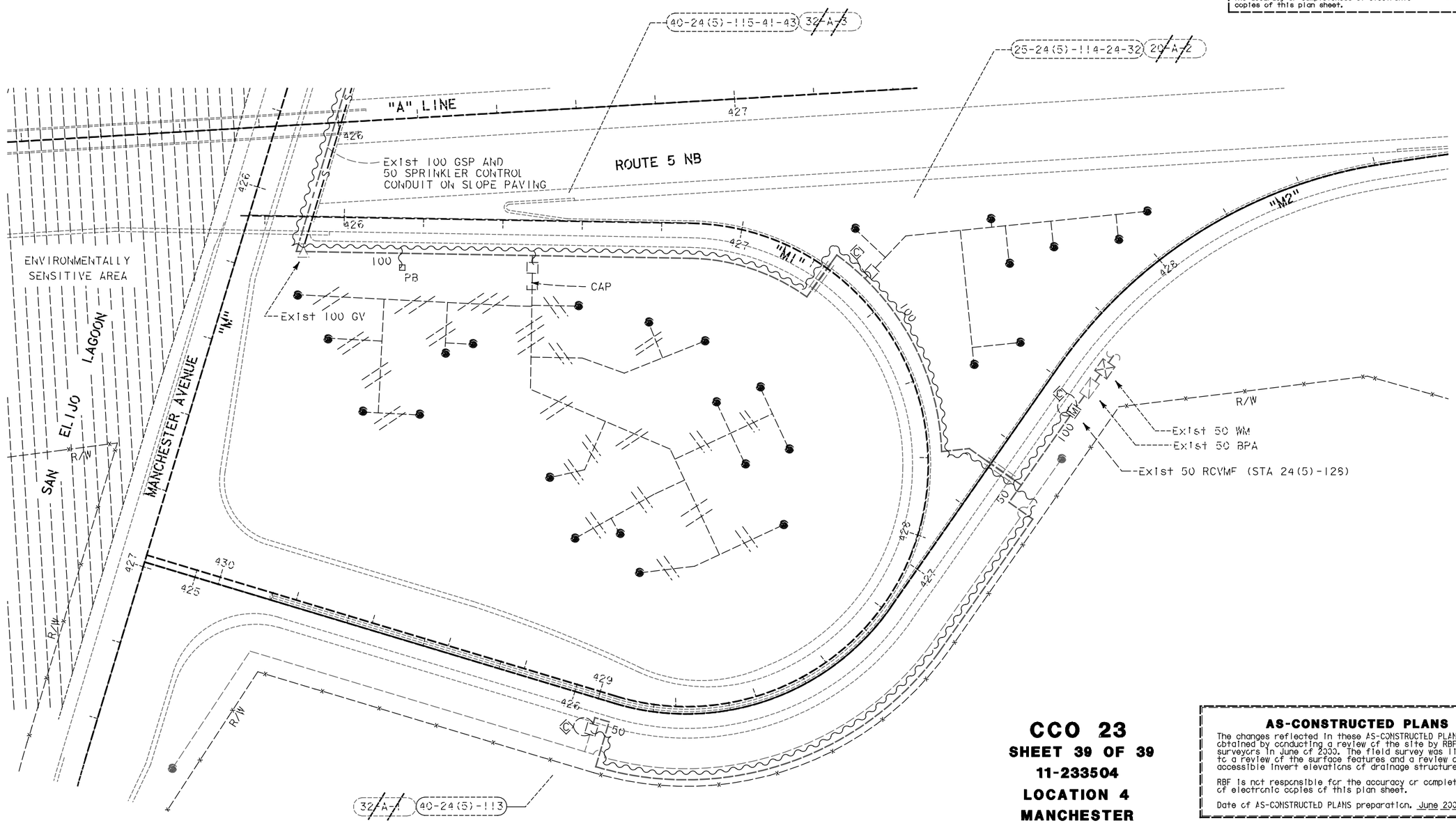

CCO 23
SHEET 39 OF 39
11-233504
LOCATION 4
MANCHESTER

AS-CONSTRUCTED PLANS

The changes reflected in these AS-CONSTRUCTED PLANS were obtained by conducting a review of the site by RBF field surveyors in June of 2000. The field survey was limited to a review of the surface features and a review of the accessible invert elevations of drainage structures.

RBF is not responsible for the accuracy or completeness of electronic copies of this plan sheet.

Date of AS-CONSTRUCTED PLANS preparation. June 2000.

NOTE: THIS PLAN ACCURATE FOR IRRIGATION WORK ONLY

NOTE: ALL IRRIGATION EQUIPMENT SIZES ARE SHOWN IN MILLIMETERS (DIAMETER NOMINAL) UNLESS OTHERWISE NOTED

IRRIGATION REMOVAL PLAN

SCALE = 1:500

HP-1

STATE OF CALIFORNIA - DEPARTMENT OF TRANSPORTATION

Caltrans

NPDES

PROJECT LANDSCAPE ARCHITECT **EMILIO VIRAMONTES**

CALCULATED/DESIGNED BY | HPM | DATE | REVISED BY
CHECKED BY | | | DATE REVISED

LAST REVISION 04-04-99

TIME PLOTTED => $$$$$$$$SYTIME$$$$$$$$

FOR REDUCED PLANS ORIGINAL SCALE IS IN MILLIMETERS 0 20 40 60 80

USERNAME => $$$$$$$USER$$$$$$$
DGN FILE => $$$$$$$$$$$DGNSPEC$$$$$$$$$$$

CU 11516

EA 233501