DIST	COUNTY	ROUTE	KILOMETER POST TOTAL PROJECT	SHEET NO.	TOTAL SHEETS
11	SD	5, 15	Var	1	41

INDEX OF SHEETS

Sheet No.

1	Title and Location Map
2-3	Standard Plans List
4-6	Key Map Plans
7-34	Drainage Plans
35-39	Traffic Handling Plans
40	Summary of Quantities
41	Revised Standard Plan

STATE OF CALIFORNIA

DEPARTMENT OF TRANSPORTATION

PROJECT PLANS FOR CONSTRUCTION ADJACENT TO STATE HIGHWAY IN SAN DIEGO COUNTY AT VARIOUS LOCATIONS

To be supplemented by Standard Plans dated July, 1997

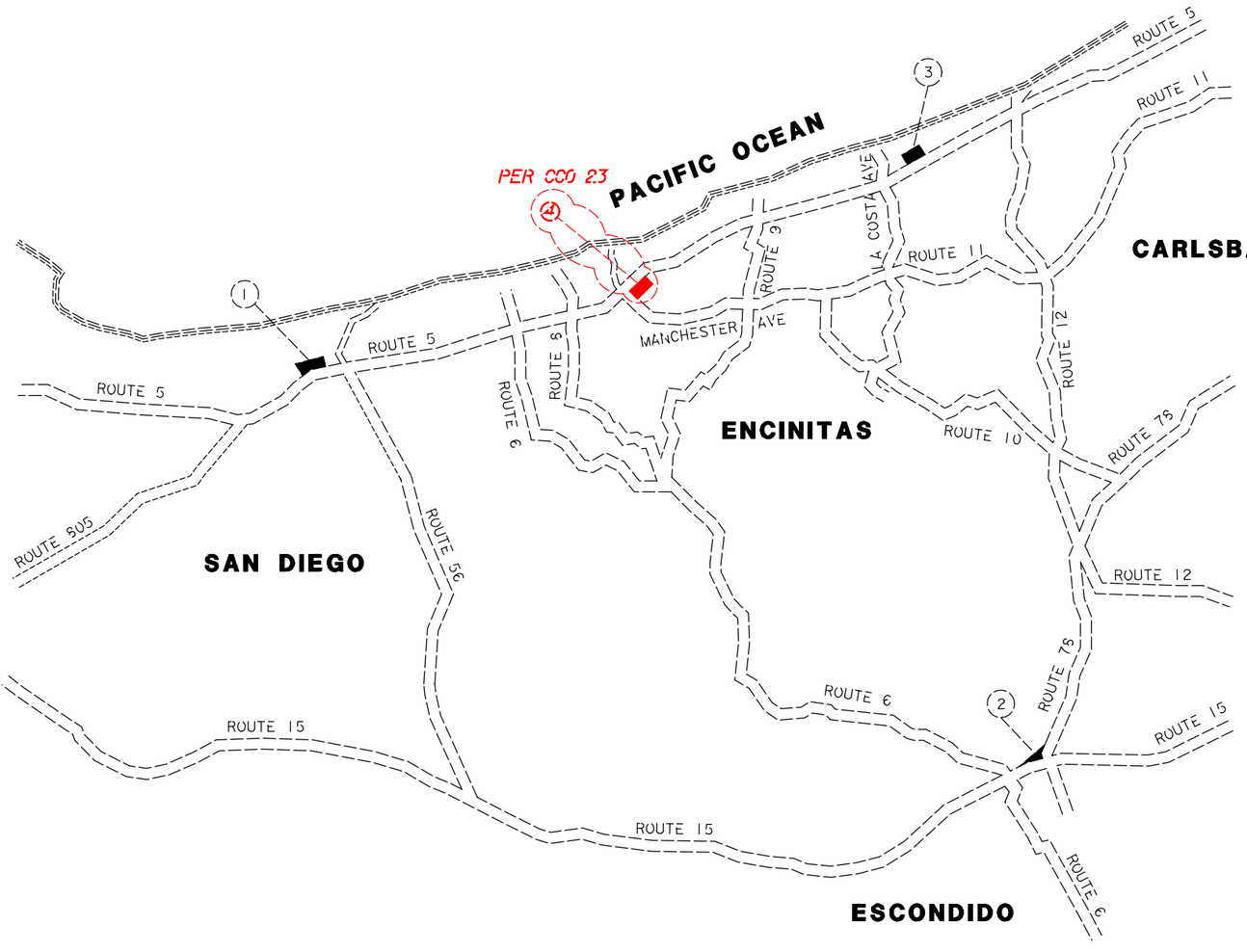

The State of California or its officers or agents shall not be responsible for the accuracy or completeness of electronic copies of this plan sheet.

Caltrans Metric

LOCATION OF CONSTRUCTION

LOC	ROUTE	KP	PM	DESCRIPTION
1	5/56	52.9	32.9	I-5/SR-56 JCT WS CONNECTOR
2	78/15	26.6	16.54	SR-78/I-15 JCT ES CONNECTOR
3	5	70.9	44.1	NORTH OF LA COSTA AVE SB EXIT RAMP
4	5	52.5	32.6	NB I-5 AT MANCHESTER AVE OFFRAMP

PER CCO 23

AS-CONSTRUCTED PLANS

The Caltrans AS-BUILT PLANS were compared to the Field Memorandums issued by RBF to the Resident Engineer.

The changes reflected in these AS-CONSTRUCTED PLANS were obtained by conducting a review of the site by RBF field surveyors in June of 2000. The field survey was limited to the discrepancies between the Caltrans AS-BUILT PLANS and RBF Field Memorandums and review of the accessible invert elevations of drainage structures.

RBF is not responsible for the accuracy or completeness of electronic copies of this plan sheet.

Date of AS-CONSTRUCTED PLANS preparation. June 2000

AS-BUILT PLANS
CONTRACT NO. 11-233504
DATE COMPLETED 6-30-99
RE: D. JUAREZ

Christian Herencia 05-11-98
Project Engineer Date
Registered Civil Engineer

REGISTERED PROFESSIONAL ENGINEER
C. HERENCIA
No. 54987
Exp. 06-30-00
CIVIL
STATE OF CALIFORNIA

May 25, 1998
Plans Approval Date

LEGEND

RBF UNITED SURVEY INFORMATION

INFORMATION NOT SHOWN BY CALTRANS

The Contractor shall possess the Class (or Classes) of license as specified in the "Notice to Contractors".

ALL DIMENSIONS ARE IN METERS UNLESS OTHERWISE SHOWN

Contract No. 11-233504

#DATE$ | #TIME$ | #FILE$
PROJECT ENGINEER: MIKE CHESNEY | DESIGN OVERSIGHT APPROVAL: PRINTED NAME: CHRISTIAN HERENCIA, SIGNATURE: Christian Herencia | REGISTRATION NO.: RCE 54987 | DATE: 05/05/98

FORM DC-OE-93-PE (REV. 3/93)

FOR REDUCED PLANS ORIGINAL SCALE IS IN MILLIMETERS 0 20 40 60 80

USERNAME => $USER
DGN FILE => $REQUEST

CU 11332 | EA 23350!

LAST REVISION | DATE PLOTTED => $DATE | 05-09-98 | TIME PLOTTED => $TIME

GENERAL ROAD WORK

MISCELLANEOUS

- ☐ A10A Abbreviations
- ☐ A10B Symbols
- ☐ A20A Pavement Markers and Traffic Lines, Typical Details
- ■ A20B Pavement Markers and Traffic Lines, Typical Details
- ☐ A20C Pavement Markers and Traffic Lines, Typical Details
- ☐ A20D Pavement Markers and Traffic Lines, Typical Details
- ☐ A24A Pavement Markings- Arrows
- ☐ A24B Pavement Markings- Arrows
- ☐ A24C Pavement Markings- Symbols and Numerals
- ☐ A24D Pavement Markings- Words
- ☐ A24E Pavement Markings- Words and Crosswalks
- ☐ A35A Portland Cement Concrete Paving Details
- ☐ A40 Rumble Strip Details
- ☐ A62A Excavation and Backfill- Miscellaneous Details
- ☐ A62B Limits of Payment for Excavation and Backfill Bridge- Surcharge and Wall
- ☐ A62C Limits of Payment for Excavation and Backfill- Bridge
- ☐ A62D Excavation and Backfill- Concrete Pipe Culverts
- ☐ A62E Excavation and Backfill- Cast-in-Place Reinforced Concrete Box and Arch Culverts
- ☐ A62F Excavation and Backfill- Metal and Plastic Culverts
- ☐ A73A Object Markers
- ■ A73B Markers
- ☐ A73C Delineators, Channelizers and Barricades
- ☐ A74 Survey Monuments
- ☐ A75A Concrete Barrier Type 50
- ☐ A75B Concrete Barrier Type 50E
- ☐ A75D Concrete Headlight Glare Screen
- ☐ *RSP A76A CONCRETE BARRIER TYPE 60*
- ☐ A76B Concrete Barrier Type 60
- ☐ A76C Concrete Barrier Type 60E
- ☐ A76D Concrete Barrier Type 60G
- ☐ A76E Concrete Barrier Type 60G
- ☐ A76F Concrete Barrier Type 60GE
- ☐ *RSP A76G CONCRETE BARRIER TYPE 60S*
- ☐ A76H Concrete Barrier Type 60S
- ☐ A76I Concrete Barrier Type 60SE
- ☐ A77A Metal Beam Guard Railing
- ☐ A77B Metal Beam Guard Railing- Standard Hardware
- ☐ *RSP A77C METAL BEAM GUARD RAILING - POST AND BLOCKS*
- ☐ A77D Guard Railing Flares
- ☐ A77E Guard Railing Flares
- ☐ A77F Metal Beam Guard Railing- Miscellaneous Details
- ☐ A77G Guard Railing End Anchors (Breakaway)
- ☐ A77GA Anchor Assembly (Breakaway, Type M)-Hardware and Post Details
- ☐ A77H Guard Railing End Anchors- Breakaway Hardware
- ☐ A77I Barrier and Guard Railing End Anchors
- ☐ A77J Guard Railing Connections to Bridge Railings, Retaining Walls and Abutments
- ☐ A77K Guard Railing Connections to Bridge Sidewalks and Curbs
- ☐ A78A Thrie Beam Barrier
- ☐ A78B Thrie Beam Barrier
- ☐ A78C Thrie Beam Barrier- Standard Hardware
- ☐ A78D Thrie Beam Barrier- Miscellaneous Details
- ☐ A78E Thrie Beam Barrier- End Anchors
- ☐ A78F Thrie Beam Barrier Connections to Bridge Railing
- ☐ A78G Thrie Beam Barrier Connections to Bridge Curbs, Retaining Walls and Abutments
- ☐ A78H Thrie Beam Barrier Connections to Concrete Barrier Type 50
- ☐ A78I Thrie Beam Barrier Connections to Concrete Barrier Type 60
- ☐ A81 Crash Cushion, Sand Filled
- ☐ A83 Portable Scale Pad and Approach Slab Details
- ☐ A85 Chain Link Fence
- ☐ A86 Barbed Wire and Wire Mesh Fences
- ■ A87 Curbs, Dikes and Driveways
- ☐ A88 Curb Ramp Details
- ☐ A90 Accessible Parking

CRIB WALLS

- ☐ C7A Reinforced Concrete Crib Wall- Battered Wall- Types A,B and C
- ☐ C7B Reinforced Concrete Crib Wall- Battered Wall- Types D,E and F
- ☐ C7C Reinforced Concrete Crib Wall- Vertical Wall- Types A,B and C
- ☐ C7D Reinforced Concrete Crib Wall- Vertical Wall- Types D,E and F
- ☐ *RSP C7E REINFORCED CONCRETE CRIB WALL-TYPES A,B,C,D,E AND F-HEADER AND STRECHER DETAILS*
- ☐ *RSP C7F DESIGN DATA FOR REINFORCED CONCRETE CRIB WALL FOUNDATION PRESSURE-BATTERED WALL*
- ☐ *RSP C7G REINFORCED CONCRETE CRIB WALL FOUNDATION PRESSURE-VERTICAL WALL*
- ☐ C8A Steel Crib Wall- Construction Details
- ☐ C8B Steel Crib Wall- Design Data
- ☐ *RSP C8C STEEL CRIB WALL-DESIGN DATA*
- ☐ C9A Timber Crib Wall- Types A,B,C and D
- ☐ *RSP C9B TIMBER CRIB WALL-TYPES A,B,C AND D-DESIGN DATA*

DRAINAGE

- ☐ D72 Drainage Inlets
- ■ D73 Drainage Inlets
- ☐ D74A Drainage Inlets
- ☐ D74B Drainage Inlets
- ■ D74C Drainage Inlet Details
- *D75 IS DELETED AND REPLACED WITH NSP D75A, NSP D75B AND NSP D75C)*
- ■ *RSP D77A Grate Details*
- ■ D77B Bicycle Proof Grate Details
- ☐ D77C Alternative Hinged Cover for Type OL and OS Inlets and Trash Rack for Type OCP Inlet
- ☐ D78 Gutter Depressions
- ☐ D79 Precast Reinforced Concrete Pipe- Direct Design Method
- ☐ D80 Cast-in-Place Reinforced Concrete Single Box Culvert
- ☐ D81 Cast-in-Place Reinforced Concrete Double Box Culvert
- ☐ D82 Cast-in-Place Reinforced Concrete Box Culvert Miscellaneous Details
- ☐ D84 Box Culvert Wingwalls- Types A,B and C
- ☐ *RSP D85 BOX CULVERT WINGWALLS-TYPES D AND E*
- ☐ D86A Box Culvert Warped Wingwalls
- ☐ D86B Pipe Culvert Headwalls, Endwalls and Warped Wingwalls
- ☐ D86C Arch Culvert Headwalls, Endwalls and Warped Wingwalls
- ☐ D87A Overside Drains
- ■ D87B Overside Drains
- ☐ D87C Underdrains
- ☐ D88 Construction Loads on Culverts
- ☐ D88A Strut Details for Structural Steel Plate Pipes, Arches, and Vehicular Undercrossings
- ■ D89 Pipe Headwalls
- ☐ D90 Pipe Culvert Headwalls, Endwalls and Wingwalls-Types A,B and C
- ☐ D93A Pipe Riser Connections
- ☐ D93B Drainage Inlet Riser Connections
- ☐ D93C Pipe Riser with Debris Rack Cage
- ☐ D94A Metal and Plastic Flared End Sections
- ■ D94B Concrete Flared End Sections
- ☐ D95 Concrete Arch Culverts
- ☐ D97A Corrugated Metal Pipe Coupling Details No. 1- Annular Coupling Band Bar and Strap and Angle Connectors
- ☐ D97B Corrugated Metal Pipe Coupling Details No. 2- Hat Band Coupler and Flange Details
- ☐ D97C Corrugated Metal Pipe Coupling Details No. 3- Helical and Universal Couplers
- ☐ D97D Corrugated Metal Pipe Coupling Details No. 4- Hugger Coupling Bands
- ☐ D97E Corrugated Metal Pipe Coupling Details No. 5- Standard Joint
- ☐ D97F Corrugated Metal Pipe Coupling Details No. 6- Positive Joint
- ☐ D97G Corrugated Metal Pipe Coupling Details No. 7- Positive Joints and Downdrains
- ■ D97H Reinforced Concrete Pipe or Non-Reinforced Concrete Pipe Standard and Positive Joints
- ☐ D98A Slotted Corrugated Steel Pipe Drain Details
- ☐ D98B Slotted Corrugated Steel Pipe Drain Details
- ☐ D99A Structural Section Drainage System Details
- ☐ D99B Edge Drain Outlet and Vent Details
- ☐ D99C Edge Drain Cleanout and Vent Details
- ☐ D99D Cross Drain Interceptor Details

HIGHWAY PLANTING

- ☐ H1 Planting and Irrigation- Abbreviations
- ☐ *RSP H2 PLANTING AND IRRIGATION-SYMBOLS*
- ☐ H3 Planting and Irrigation- Details
- ☐ H4 Planting and Irrigation- Details
- ☐ H5 Planting and Irrigation- Details
- ☐ H6 Planting and Irrigation- Details
- ☐ H7 Planting and Irrigation- Details
- ☐ H8 Planting and Irrigation- Details

TEMPORARY FACILITIES

- ■ T1 Temporary Crash Cushion, Sand Filled
- ■ T2 Temporary Crash Cushion, Sand Filled
- ■ T3 Temporary Railing (Type K)
- ☐ T4 Temporary Traffic Screen
- ☐ T5 Temporary Terminal Section (Type K)
- ☐ T7 Construction Project Funding Identification Signs
- ■ T10 Traffic Control System for Lane Closure on Freeways and Expressways
- ☐ T10A Traffic Control System for Lane and Complete Closures on Freeways and Expressways
- ■ T11 Traffic Control System for Lane Closure on Multilane Conventional Highways
- ☐ T12 Traffic Control System for Lane Closure on Multilane Conventional Highways
- ☐ T13 Traffic Control System for Lane Closure on Two Lane Conventional Highways
- ■ T14 Traffic Control System for Ramp Closures
- ☐ T15 Traffic Control System for Moving Lane Closure on Multilane Highways
- ☐ T16 Traffic Control System for Moving Lane Closure on Multilane Highways
- ☐ T17 Traffic Control System for Moving Lane Closure on Two Lane Highways

BRIDGE

- ☐ B0-1 Bridge Details
- ☐ B0-3 Bridge Details
- ☐ B0-5 Bridge Details
- ☐ B0-13 Bridge Details
- ☐ B2-3 400 mm Cast-in-Drilled-Hole Concrete Pile
- ☐ B2-5 Pile Details- Class 400 and Class 625
- ☐ B2-6 Pile Details- Class 400C and Class 625C
- ☐ B2-8 Pile Details- Class 900 and Class 900C
- ☐ B2-9 Load Test Pile Details (1)
- ☐ B2-10 Load Test Pile Details (2)
- ☐ B2-11 Load Test Pile Details (3)
- ☐ *RSP B3-1 RETAINING WALL TYPE 1-H=1200 THROUGH 9100 mm*
- ☐ B3-2 Retaining Wall Type 1- H=9700 Through 10 900 mm
- ☐ *RSP B3-3 RETAINING WALL-TYPE 1A*
- ☐ B3-4 Retaining Wall- Type 2
- ☐ B3-5 Counterfort Retaining Wall- Type 3
- ☐ B3-6 Counterfort Retaining Wall- Type 4
- ☐ *RSP B3-7 RETAINING WALL-TYPE 5*
- ☐ *RSP B3-8 RETAINING WALL DETAILS No.1*
- ☐ B3-9 Retaining Wall Details No. 2
- ☐ B3-11 Retaining Wall Type 6- 1829 mm Maximum
- ☐ B6-1 T-Beam Details
- ☐ B6-10 Utility Openings, T-Beam
- ☐ B6-21 Joint Seals (Maximum Movement Rating = 50 mm)
- ☐ B7-1 Box Girder Details
- ☐ B7-5 Deck Drains
- ☐ B7-6 Deck Drains- Type D-1 and D-2
- ☐ B7-10 Utility Opening- Box Girder
- ☐ B7-11 Utility Details
- ☐ B8-5 Cast-in-Place Prestressed Girder Details
- ☐ B11-7 Chain Link Railing
- ☐ B11-47 Cable Railing
- ☐ B11-51 Tubular Hand Railing
- ☐ B11-52 Chain Link Railing Type 7
- ☐ B11-53 Concrete Barrier Type 25
- ☐ B11-54 Concrete Barrier Type 26

AS-CONSTRUCTED PLANS

The Caltrans AS-BUILT PLANS were compared to the Field Memorandums issued by RBF to the Resident Engineer.

The changes reflected in these AS-CONSTRUCTED PLANS were obtained by conducting a review of the site by RBF field surveyors in June of 2000. The field survey was limited to the discrepancies between the Caltrans AS-BUILT PLANS and RBF Field Memorandums and review of the accessible invert elevations of drainage structures.

RBF is not responsible for the accuracy or completeness of electronic copies of this plan sheet.

Date of AS-CONSTRUCTED PLANS preparation: June 2000

Caltrans Metric

DIST.	COUNTY	ROUTE	KILOMETER POST TOTAL PROJECT	SHEET NO.	TOTAL SHEETS
11	SD	5, 15	Var	2	41

The State of California or its officers or agents shall not be responsible for the accuracy or completeness of electronic copies of this plan sheet.

To accompany plans dated 5-25-98

AS-BUILT PLANS
CONTRACT NO. 11-233504
DATE COMPLETED 6-30-99
RE: D. JUAREZ

SHEET 1 OF 2
STANDARD PLANS LIST
(July, 1997 Edition)
REVISED DECEMBER 4, 1997

WEB SITE ADDRESS: http://www.dot.ca.gov/hq/esc/projplan/ppintro.htm

DATE PLOTTED => $DATE
TIME PLOTTED => $TIME
LAST REVISION 05-09-98

The Standard Plan sheets applicable to this contract include, but are not limited to those indicated by a marked box.
The Revised Standard Plans (RSP) and New Standard Plans (NSP) which apply to this contract are included as individual sheets of the project plans.

USERNAME => $USER
DGN FILE => $REQUEST

CONTRACT NO. 11-233504

- ☐ B13-1 Slope Protection Details
- ☐ B14-1 Structural Steel Plate Vehicular Undercrossing
- ☐ B14-3 Communication and Sprinkler Control Conduit (Conduit less than size 103)
- ☐ B14-4 Water Supply Line (Bridge) (Pipe less than NPS 4)
- ☐ B14-5 Water Supply Line (Details) (Pipe less than NPS 4)

ROADSIDE SIGNS

- ■ RS1 Roadside Signs, Typical Installation Details No. 1
- ■ RS2 Roadside Signs, Wood Post, Typical Installation Details No. 2
- ☐ RS3 Roadside Signs, Laminated Wood Box Post, Typical Installation Details No. 3
- ■ RS4 Roadside Signs, Typical Installation Details No. 4

OVERHEAD SIGNS

OVERHEAD SIGNS-TRUSS

- ☐ S1 Overhead Signs- Truss, Instructions and Examples
- ☐ S2 Overhead Signs- Truss, Single Post Type, Post Types 11 thru V11
- ☐ S3 Overhead Signs- Truss, Two Post Type, Post Types 1-S thru V11-S
- ☐ *RSP S4* *OVERHEAD SIGNS-TRUSS, SINGLE POST TYPE, STRUCTURAL FRAME MEMBERS*
- ☐ S5 Overhead Signs- Truss, Two Post Type, Structural Frame Members
- ☐ S6 Overhead Signs- Truss, Structural Frame Details
- ☐ S7 Overhead Signs- Truss, Frame Juncture Details
- ☐ S8A Overhead Signs- Steel Frame Removable Sign Panel Frames
- ☐ S8B Overhead Signs- Removable Sign Panel Frames, Overhead Formed Panel Mounting Details
- ☐ S8C Overhead Signs- Truss, Sign Panel Mounting Details, Laminated Panel- Type A
- ☐ S8D Overhead Signs- Truss, Removable Sign Panel Frames 2.794 m and 3.048 m Sign Panels
- ☐ S9 Overhead Signs- Walkway Details No. 1
- ☐ S10 Overhead Signs- Walkway Details No. 2
- ☐ S11 Overhead Signs- Walkway Safety Railing Details
- ☐ S13 Overhead Signs- Truss Pile Foundation

OVERHEAD SIGNS-LIGHTWEIGHT

- ☐ S14A Overhead Signs- Lightweight Balanced-Single Steel Post Connection and Mounting Details
- ☐ S14B Overhead Signs- Lightweight Balanced-Single Steel Post Details
- ☐ S15 Overhead Signs- Lightweight, Type A, Connection Details
- ☐ S16 Overhead Signs- Lightweight, Type B, Connection Details
- ☐ S17 Overhead Signs- Lightweight, Type C, Connection Details
- ☐ S18A Overhead Signs- Lightweight, Sign Panel Mounting Details, Laminated Panel- Type A
- ☐ S18B Overhead Signs- Lightweight, Light Fixture Mounting Details
- ☐ S20A Overhead Signs- Lightweight Post Details
- ☐ S20B Overhead Signs- Lightweight Foundation Details

OVERHEAD SIGNS-BOX BEAM CLOSED TRUSS ALTERNATIVE

- ☐ S39 Overhead Signs- Box Beam Closed Truss, Foundation Details
- ☐ S40A Overhead Signs- Box Beam Closed Truss, Two Post Type Frame Members
- ☐ S40B Overhead Signs- Box Beam Closed Truss, Single and Two Post Type, General Frame Details
- ☐ S40C Overhead Signs- Box Beam Closed Truss, Ribbed Sheet Metal Details
- ☐ S40D Overhead Signs- Box Beam Closed Truss, Two Post Type, Frame Details
- ☐ S40E Overhead Signs- Box Beam Closed Truss, Two Post Type, Frame Juncture Details
- ☐ S40F Overhead Signs- Box Beam Closed Truss, Two Post Type, Post Details
- ☐ S40G Overhead Signs- Box Beam Closed Truss, Single Post Type, Frame Members
- ☐ S40H Overhead Signs- Box Beam Closed Truss, Single Post Cantilever, Frame Details
- ☐ S40I Overhead Signs- Box Beam Closed Truss, Single Post Cantilever, Frame Juncture Details
- ☐ S40J Overhead Signs- Box Beam Closed Truss, Single Post Cantilever, Post Details
- ☐ S40K Overhead Signs- Box Beam Closed Truss, Single Post Butterfly, Frame Details
- ☐ S40L Overhead Signs- Box Beam Closed Truss, Single Post Butterfly, Frame Juncture Details
- ☐ S40M Overhead Signs- Box Beam Closed Truss, Single Post Butterfly, Post Details

OVERHEAD SIGNS-TUBULAR

- ☐ S40N Overhead Signs- Tubular, Instructions and Examples
- ☐ S40P Overhead Signs- Tubular, Single Post Type, Layout and Pipe Selection
- ☐ S40Q Overhead Signs- Tubular, Two Post Type, Layout and Pipe Selection
- ☐ S40R Overhead Signs- Tubular, Structural Frame Details No. 1
- ☐ S40S Overhead Signs- Tubular, Structural Frame Details No. 2
- ☐ S40T Overhead Signs- Tubular, Foundation Details

SIGNALS, LIGHTING AND ELECTRICAL SYSTEMS

- ☐ ES-1A Signal, Lighting and Electrical Systems- Symbols and Abbreviations
- ☐ ES-1B Signal, Lighting and Electrical Systems- Symbols and Abbreviations
- ☐ ES-2A Signal, Lighting and Electrical Systems- Service Equipment
- ☐ ES-2B Signal, Lighting and Electrical Systems- Service Equipment
- ☐ ES-2C Signal, Lighting and Electrical Systems- Service Equipment Notes
- ☐ ES-2D Signal, Lighting and Electrical Systems- Service Equipment and Typical Wiring Diagram, Type A
- ☐ ES-2E Signal, Lighting and Electrical Systems- Service Equipment and Typical Wiring Diagram, Type B
- ☐ ES-2F Signal, Lighting and Electrical Systems- Service Equipment and Typical Wiring Diagram, Type C
- ☐ ES-3A Signal, Lighting and Electrical Systems- Signal Heads and Mountings
- ☐ ES-3B Signal, Lighting and Electrical Systems- Signal Heads and Mountings
- ☐ ES-3C Signal, Lighting and Electrical Systems- Signal Heads and Mountings
- ☐ ES-3D Signal, Lighting and Electrical Systems- Signal Heads and Mountings
- ☐ ES-3E Signal, Lighting and Electrical Systems- Signal Heads and Mountings
- ☐ ES-4A Signal, Lighting and Electrical Systems- Controller Cabinet Details
- ☐ ES-4B Signal, Lighting and Electrical Systems- Controller Cabinet Details
- ☐ ES-4C Signal, Lighting and Electrical Systems- Controller Cabinet Details
- ☐ ES-4D Irrigation Controller Enclosure Cabinet
- ☐ ES-5A Signal, Lighting and Electrical Systems- Detectors
- ☐ ES-5B Signal, Lighting and Electrical Systems- Detectors
- ☐ ES-5C Signal, Lighting and Electrical Systems- Detectors
- ☐ ES-5D Signal, Lighting and Electrical Systems- Detectors
- ☐ ES-5E Signal, Lighting and Electrical Systems- Detectors
- ☐ ES-5F Signal, Lighting and Electrical Systems- Pedestrian Barricades
- ☐ ES-6A Signal and Lighting Standards- Type 1 Standards and Equipment Numbering
- ☐ ES-6AA Signal Standards- Push Button Posts
- ☐ ES-6B Lighting Standards- Types 15, 21 and 22
- ☐ ES-6C Lighting Standards- 24.4 m to 48.8 m High Mast Light Pole, Foundation Details
- ☐ ES-6D Lighting Standards- Types 30 and 31
- ☐ ES-6DA Lighting Standards- Type 32
- ☐ ES-6E Lighting Standards- Types 30 and 31, Base Details
- ☐ ES-6F Lighting Standards- 10 Degree Type
- ☐ ES-6H Lighting Standards- 10 Degree Type, Details
- ☐ *RSP ES-6J* *SIGNAL AND LIGHTING STANDARDS- CASE 1 ARM LOADING, WIND VELOCITY = 113 km/h, ARM LENGTHS 4.6 m TO 9.1 m*
- ☐ ES-6K Signal and Lighting Standards- Case 2 Arm Loading, Wind Velocity = 113 km/h, Arm Lengths 6.1 m to 9.1 m
- ☐ ES-6L Signal and Lighting Standards- Case 3 Arm Loading, Wind Velocity = 113 km/h, Arm Lengths 4.6 m to 13.7 m
- ☐ ES-6M Signal and Lighting Standards- Case 4 Arm Loading, Wind Velocity = 113 km/h, Arm Lengths 7.6 m to 13.7 m
- ☐ ES-6MA Signal and Lighting Standards- Case 5 Arm Loading, Wind Velocity = 113 km/h, Arm Lengths 15.2 m to 16.8 m
- ☐ ES-6N Signal and Lighting Standards- Type 40-0-129
- ☐ ES-6O Signal and Lighting Standards- Case 1 Arm Loading, Wind Velocity = 129 km/h, Arm Lengths 7.6 m to 9.1 m
- ☐ ES-6P Signal and Lighting Standards- Case 2 Arm Loading, Wind Velocity = 129 km/h, Arm Lengths 6.1 m to 9.1 m
- ☐ ES-6Q Signal and Lighting Standards- Case 3 Arm Loading, Wind Velocity = 129 km/h, Arm Lengths 6.1 m to 13.7 m

Caltrans Metric

DIST.	COUNTY	ROUTE	KILOMETER POST TOTAL PROJECT	SHEET NO.	TOTAL SHEETS
11	SD	5, 15	Var	3	41

The State of California or its officers or agents shall not be responsible for the accuracy or completeness of electronic copies of this plan sheet.

To accompany plans dated 5-25-98

- ☐ *RSP ES-6R* *SIGNAL AND LIGHTING STANDARDS- CASE 4 ARM LOADING, WIND VELOCITY = 129 km/h, ARM LENGTHS 7.6 m TO 13.7 m*
- ☐ ES-6RA Signal and Lighting Standards- Case 5 Arm Loading, Wind Velocity = 129 km/h, Arm Lengths 15.2 m to 16.8 m
- ☐ ES-6RB Signal and Lighting Standards- Case 5 Arm Loading, Wind Velocity = 129 km/h, Arm Lengths 18.2 m to 19.8 m
- ☐ ES-6S Signal and Lighting Standards- Details No. 1
- ☐ ES-6T Signal and Lighting Standards- Details No. 2
- ☐ ES-6TA Signal and Lighting Standards- Pole and Mast Arm Alternatives
- ☐ ES-6U Lighting Standards- Type 15 Slip Base Insert
- ☐ ES-6V Signal and Sign Standards- Type 33 Left Turn
- ☐ ES-7A Signal, Lighting and Electrical Systems- Electrical Details, Structure Installations
- ☐ ES-7B Signal, Lighting and Electrical Systems- Electrical Details, Structure Installations
- ☐ ES-7C Signal, Lighting and Electrical Systems- Electrical Details, Structure Installations
- ☐ ES-7D Signal, Lighting and Electrical Systems- Electrical Details, Structure Installations
- ☐ ES-7E Signal, Lighting and Electrical Systems- Electrical Details, Structure Installations
- ☐ ES-7F Signal, Lighting and Electrical Systems- Flush Soffit Luminaire Modification Details, Structure Installations
- ☐ ES-8 Signal, Lighting and Electrical Systems- Pull Box Details
- ☐ ES-9A Signal, Lighting and Electrical Systems- Cantilever Flashing Beacon, Types 9, 9A and 9B
- ☐ ES-9B Signal, Lighting and Electrical Systems- Cantilever Flashing Beacon, Types 9, 9A and 9B
- ☐ ES-10 Signal, Lighting and Electrical Systems- Isolux Diagrams
- ☐ ES-11 Signal, Lighting and Electrical Systems- Foundation Installations
- ☐ ES-12 Signal, Lighting and Electrical Systems- Pedestrian Undercrossing Fluorescent Lighting Fixture
- ☐ ES-13 Signal, Lighting and Electrical Systems- Splicing Details
- ☐ ES-14 Signal, Lighting and Electrical Systems- Wiring Details and Fuse Ratings
- ☐ ES-15 Signal, Lighting and Electrical Systems- Pedestrian Overcrossing Fluorescent Lighting Fixture
- ☐ ES-27A Signal, Lighting and Electrical Systems- Extinguishable Message Sign, 250 mm Letters
- ☐ ES-27B Signal, Lighting and Electrical Systems- Extinguishable Message Sign, 250 mm Letters
- ☐ ES-28 Signal, Lighting and Electrical Systems- Extinguishable Message Sign and Flashing Beacons

SIGN ILLUMINATION

- ☐ ES-29 Sign Illumination- Mercury Sign Illumination Equipment
- ☐ ES-30 Sign Illumination- 915 mm Fluorescent Sign Illumination Equipment
- ☐ ES-32A Sign Illumination- Sign Illumination Equipment
- ☐ ES-32B Sign Illumination- Sign Illumination Control
- ☐ ES-33 Sign Illumination- Internally Illuminated Street Name Sign

CLOSED CIRCUIT TELEVISION

- ☐ *RSP ES-34A* *CLOSED CIRCUIT TELEVISION- POLE DETAILS*
- ☐ ES-34B Closed Circuit Television- Pole Details- Overhead Sign Mounted

NEW STANDARD PLANS

- ☐ *NSP D75A* *PIPE INLETS*
- ☐ *NSP D75B* *PIPE INLETS*
- ☐ *NSP D75C* *PIPE INLETS- LADDER, STEP AND TRASH RACK DETAILS*

AS-CONSTRUCTED PLANS

The Caltrans AS-BUILT PLANS were compared to the Field Memorandums issued by RBF to the Resident Engineer.

The changes reflected in these AS-CONSTRUCTED PLANS were obtained by conducting a review of the site by RBF field surveyors in June of 2000. The field survey was limited to the discrepancies between the Caltrans AS-BUILT PLANS and RBF Field Memorandums and review of the accessible invert elevations of drainage structures.

RBF is not responsible for the accuracy or completeness of electronic copies of this plan sheet.

Date of AS-CONSTRUCTED PLANS preparation. June 2000

AS-BUILT PLANS

CONTRACT NO. 11-233504
DATE COMPLETED 6-30-99
RE: D. JUAREZ

SHEET 2 OF 2
STANDARD PLANS LIST
(July, 1997 Edition)
REVISED DECEMBER 4, 1997

WEB SITE ADDRESS: http://www.dot.ca.gov/hq/esc/projplan/ppintro.htm

DATE PLOTTED => $DATE
TIME PLOTTED => $TIME

LAST REVISION 05-09-98

The Standard Plan sheets applicable to this contract include, but are not limited to those indicated by a marked box.
The Revised Standard Plans (RSP) and New Standard Plans (NSP) which apply to this contract are included as individual sheets of the project plans.

USERNAME => $USER
DGN FILE => $REQUEST

CONTRACT NO. 11-233504

DIST	COUNTY	ROUTE	KILOMETER POST TOTAL PROJECT	SHEET NO.	TOTAL SHEETS
11	SD	5, 15	Var	5	41

REGISTERED CIVIL ENGINEER DATE

MIKE CHESNEY
No. 48913
Exp. 9-30-00
CIVIL
STATE OF CALIFORNIA
REGISTERED PROFESSIONAL ENGINEER

5-25-98
PLANS APPROVAL DATE

ROBERT BEIN, WILLIAM FROST & ASSOCIATES
14725 ALTON PARKWAY
IRVINE, CA 92618

The State of California or its officers or agents shall not be responsible for the accuracy or completeness of electronic copies of this plan sheet.

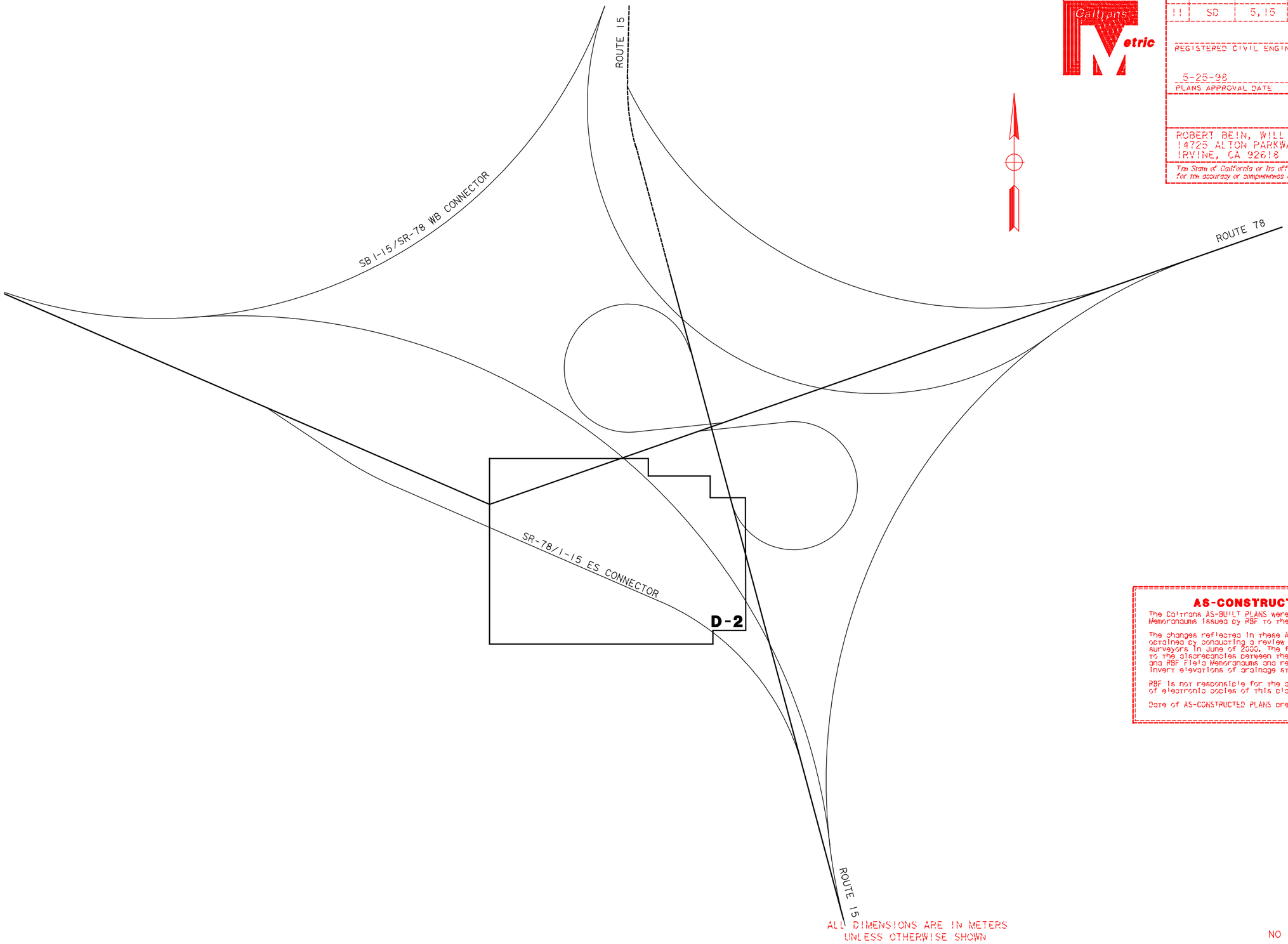

ALL DIMENSIONS ARE IN METERS
UNLESS OTHERWISE SHOWN

AS-CONSTRUCTED PLANS

The Caltrans AS-BUILT PLANS were compared to the field Memorandums issued by RBF to the Resident Engineer.

The changes reflected in these AS-CONSTRUCTED PLANS were obtained by conducting a review of the site by RBF field surveyors in June of 2000. The field survey was limited to the discrepancies between the Caltrans AS-BUILT PLANS and RBF Field Memorandums and review of the accessible invert elevations of drainage structures.

RBF is not responsible for the accuracy or completeness of electronic copies of this plan sheet.

Date of AS-CONSTRUCTED PLANS preparation. June 2000

AS-BUILT PLANS

CONTRACT NO. 11-233504
DATE COMPLETED 6-30-99
RE: D. JUAREZ

KEY MAP
I-15/SR-78
(LOCATION 2)

NO SCALE

K-2

DESIGN OVERSIGHT
CHRISTIAN HERENCIA

CALCULATED/ DESIGNED BY | NW | 4/98 | DATE REVISED BY
CHECKED BY | MC | 4/98 | DATE REVISED

STATE OF CALIFORNIA - DEPARTMENT OF TRANSPORTATION
Caltrans
NPDES

&DATES &TIMES &FILES

LAST REVISION | DATE PLOTTED => &DATE
05-29-98 | TIME PLOTTED => &TIME

FOR REDUCED PLANS
ORIGINAL SCALE IN MILLIMETERS 0 20 40 60 80

USERNAME => &USER
DGN FILE => &REQUEST

CU 11332 | EA 23350!

BASIS OF BEARING AND COORDINATES

BEARINGS AND COORDINATES AS SHOWN HEREON ARE IN TERMS OF THE CALIFORNIA COORDINATE SYTEM OF 1983 (1991.35), ZONE 6, BASED LOCALLY UPON THE FOLLOWING CONTINUOUSLY OPERATING REFERENCE STATIONS AS PUBLISHED BY THE NATIONAL GEODETIC SURVEY AND TRANSFORMED TO THE 1991.35 EPOCH USING THE HTDP MODEL VERSION 2.1.

STATION	NORTHING(X)	EASTING(Y)
MONP	580,447.164	1,983,875.722
SIO3	577,862.412	1,906,370.402
TRAK	662,023.898	1,855,858.790

BENCHMARK

ELEVATIONS AS SHOWN HEREON ARE IN TERMS OF THE NORTH AMERICAN VERTICAL DATUM OF 1988 BASED LOCALLY UPON THE FOLLOWING BENCHMARKS.

BENCHMARK	NAVD88 ELEV	SOURCE
TRAK	151.604	COUNTY OF ORANGE
DASH	462.113	NGS
F1415	75.015	NGS

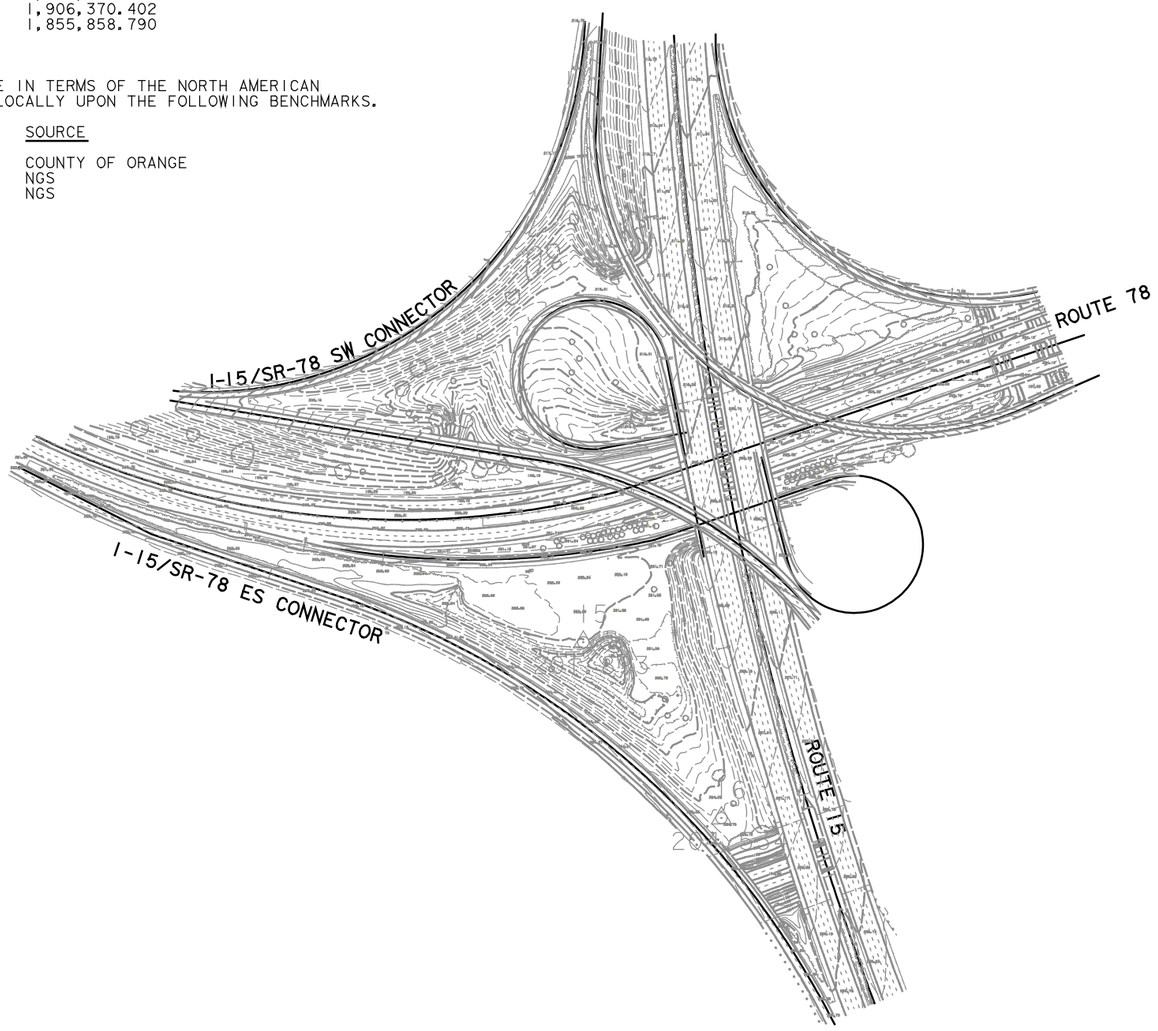

PROJECT CONTROL

STA NAME	NORTHING(Y) METERS	EASTING(X) METERS	EPOCH DATE	ELEVATION METERS	DESCRIPTION
15	606,707.769	1,920,134.709	1991.35	201.893	1"IP W/NAIL & SHINER I-5/SR78
16	606,584.176	1,920,231.693	1991.35	204.534	1"IP W/NAIL & SHINER I-5/SR78

AS-CONSTRUCTED PLANS

The Caltrans AS-BUILT PLANS were compared to the Field Memorandums issued by RBF to the Resident Engineer.

The changes reflected in these AS-CONSTRUCTED PLANS were obtained by conducting a review of the site by RBF field surveyors in June of 2000. The field survey was limited to the discrepancies between the Caltrans AS-BUILT PLANS and RBF Field Memorandums and review of the accessible invert elevations of drainage structures.

RBF is not responsible for the accuracy or completeness of electronic copies of this plan sheet.

Date of AS-CONSTRUCTED PLANS preparation. June 2000

DIST	COUNTY	ROUTE	KILOMETER POST TOTAL PROJECT	SHEET NO.	TOTAL SHEETS
11	SD	78/15	26.6		

REGISTERED CIVIL ENGINEER

MIKE CHESNEY
No. 48913
Exp. 9-30-00
CIVIL
STATE OF CALIFORNIA
REGISTERED PROFESSIONAL ENGINEER

PLANS APPROVAL DATE

ROBERT BEIN, WILLIAM FROST & ASSOCIATES
14725 ALTON PARKWAY
IRVINE, CA 92618

The State of California or its officers or agents shall not be responsible for the accuracy or completeness of electronic copies of this plan sheet.

AS-BUILT PLANS
CONTRACT NO. 11-233504
DATE COMPLETED 6-30-99
RE: D. JUAREZ

CONSTRUCTION STAKING SURVEY CONTROL DATA (LOCATION 2) I-15/SR-78

SCALE: 1:2000

CSS-2

DATE	REVISED BY	DATE REVISED
3/98	GY	3/98 MC

CALCULATED/ DESIGNED BY
CHECKED BY

DESIGN OVERSIGHT
CHRISTIAN HERENCIA

STATE OF CALIFORNIA - DEPARTMENT OF TRANSPORTATION
Caltrans

&FILE$ &TIME$ &DATE$

FOR REDUCED PLANS ORIGINAL SCALE IN MILLIMETERS 0 20 40 60 80

USERNAME => $$$$$$USER$$$$$$
DGN FILE => $$$$$$$$$$DGNSPEC$$$$$$$$$$

CU 11332 EA 23350!

FOR COMPLETE R/W AND ACCURATE ACCESS DATA, SEE R/W RECORD MAPS AT DISTRICT OFFICE

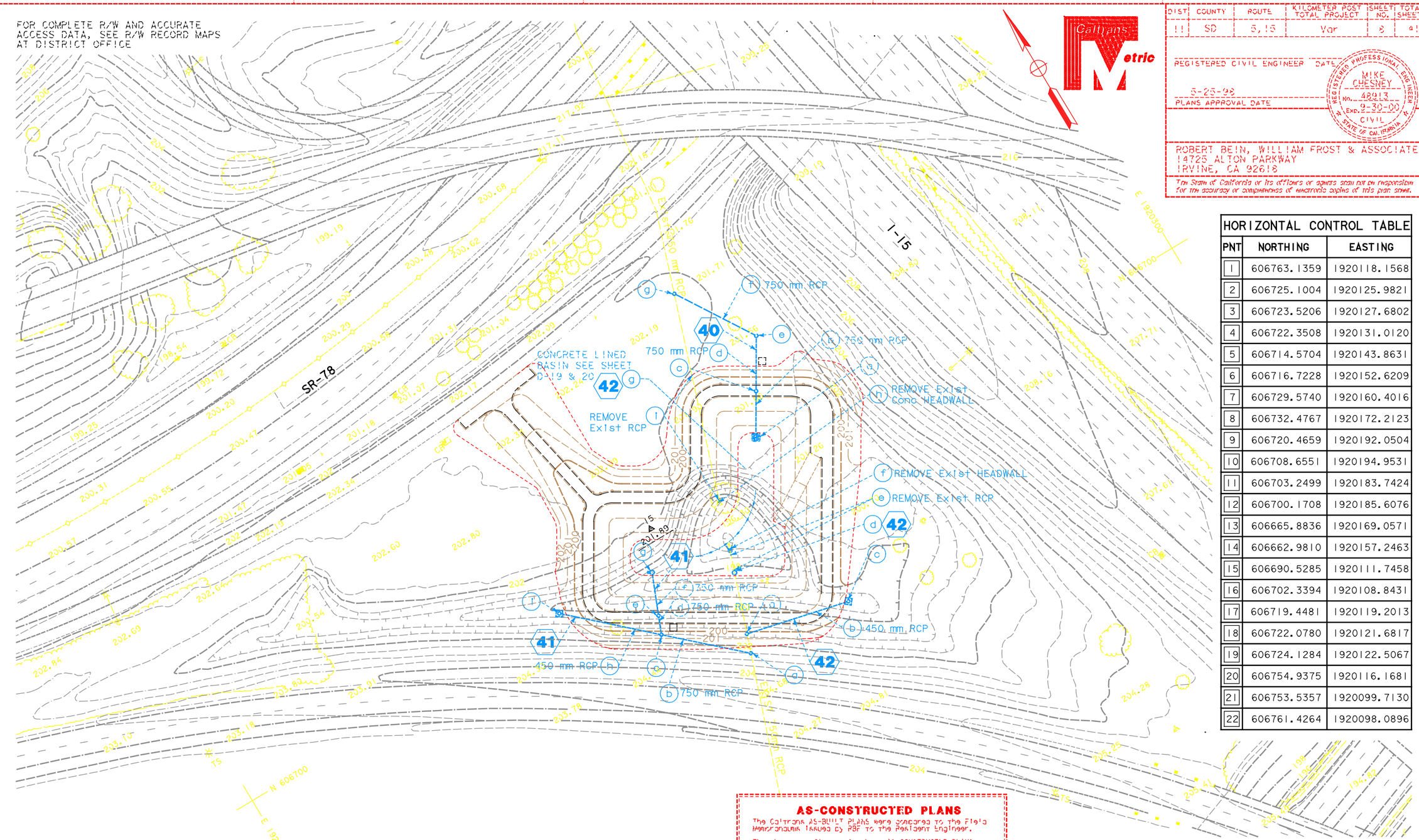

DIST	COUNTY	ROUTE	KILOMETER POST TOTAL PROJECT	SHEET NO.	TOTAL SHEETS
11	SD	5,15	Var	8	41

REGISTERED CIVIL ENGINEER DATE

5-25-98

PLANS APPROVAL DATE

REGISTERED PROFESSIONAL ENGINEER MIKE CHESNEY No. 48913 Exp. 9-30-00 CIVIL STATE OF CALIFORNIA

ROBERT BEIN, WILLIAM FROST & ASSOCIATES
14725 ALTON PARKWAY
IRVINE, CA 92618

The State of California or its officers or agents shall not be responsible for the accuracy or completeness of electronic copies of this plan sheet.

HORIZONTAL CONTROL TABLE

PNT	NORTHING	EASTING
1	606763.1359	1920118.1568
2	606725.1004	1920125.9821
3	606723.5206	1920127.6802
4	606722.3508	1920131.0120
5	606714.5704	1920143.8631
6	606716.7228	1920152.6209
7	606729.5740	1920160.4016
8	606732.4767	1920172.2123
9	606720.4659	1920192.0504
10	606708.6551	1920194.9531
11	606703.2499	1920183.7424
12	606700.1708	1920185.6076
13	606665.8836	1920169.0571
14	606662.9810	1920157.2463
15	606690.5285	1920111.7458
16	606702.3394	1920108.8431
17	606719.4481	1920119.2013
18	606722.0780	1920121.6817
19	606724.1284	1920122.5067
20	606754.9375	1920116.1681
21	606753.5357	1920099.7130
22	606761.4264	1920098.0896

AS-CONSTRUCTED PLANS

The Caltrans AS-BUILT PLANS were compared to the Field Memorandums issued by RBF to the Resident Engineer.

The changes reflected in these AS-CONSTRUCTED PLANS were obtained by conducting a review of the site by RBF field surveyors in June of 2000. The field survey was limited to the discrepancies between the Caltrans AS-BUILT PLANS and RBF Field Memorandums and review of the accessible invert elevations of drainage structures.

RBF is not responsible for the accuracy or completeness of electronic copies of this plan sheet.

Date of AS-CONSTRUCTED PLANS preparation. June 2000

AS-BUILT PLANS
CONTRACT NO. 11-233504
DATE COMPLETED 8-30-99
RE: D. JUAREZ

CONTOUR GRADING AND DRAINAGE PLAN (LOCATION 2)

SCALE: 1:500

D-2

ALL DIMENSIONS ARE IN METERS UNLESS OTHERWISE SHOWN

FOR REDUCED PLANS ORIGINAL SCALE IN MILLIMETERS 0 20 40 60 80

USERNAME => $USER
DGN FILE => $REQUEST

CU 11332

EA 233501

STATE OF CALIFORNIA - DEPARTMENT OF TRANSPORTATION
Caltrans
NPDES
DESIGN OVERSIGHT
CHRISTIAN HERENCIA
CALCULATED/DESIGNED BY NYW DATE 4/98
CHECKED BY MC 4/98
REVISED BY
DATE REVISED

$DATE$ $TIME$ $FILE$

LAST REVISION 05-09-98
DATE PLOTTED => $DATE
TIME PLOTTED => $TIME

FOR COMPLETE R/W AND ACCURATE ACCESS DATA, SEE R/W RECORD MAPS AT DISTRICT OFFICE

DIST	COUNTY	ROUTE	KILOMETER POST TOTAL PROJECT	SHEET NO.	TOTAL SHEETS
11	SD	5,15	Var	9	41

REGISTERED CIVIL ENGINEER — DATE

MIKE CHESNEY — No. 48913 — EXP. 9-30-00 — CIVIL — STATE OF CALIFORNIA

5-25-98
PLANS APPROVAL DATE

ROBERT BEIN, WILLIAM FROST & ASSOCIATES
14725 ALTON PARKWAY
IRVINE, CA 92618

The State of California or its officers or agents shall not be responsible for the accuracy or completeness of electronic copies of this plan sheet.

HORIZONTAL CONTROL TABLE		
PNT	NORTHING	EASTING
1	606763.1359	1920118.1568
2	606725.1004	1920125.9821
3	606723.5206	1920127.6802
4	606722.3508	1920131.0120
5	606714.5704	1920143.8631
6	606716.7228	1920152.6209
7	606729.5740	1920160.4016
8	606732.4767	1920172.2123
9	606720.4659	1920192.0504
10	606708.6551	1920194.9531
11	606703.2499	1920183.7424
12	606700.1708	1920185.6076
13	606665.8836	1920169.0571
14	606662.9810	1920157.2463
15	606690.5285	1920111.7458
16	606702.3394	1920108.8431
17	606719.4481	1920119.2013
18	606722.0780	1920121.6817
19	606724.1284	1920122.5067
20	606754.9375	1920116.1681
21	606753.5357	1920099.7130
22	606761.4264	1920098.0896

AS-CONSTRUCTED PLANS

The Caltrans AS-BUILT PLANS were compared to the Field Memorandums issued by RBF to the Resident Engineer.

The changes reflected in these AS-CONSTRUCTED PLANS were obtained by conducting a review of the site by RBF field surveyors in June of 2000. The field survey was limited to the discrepancies between the Caltrans AS-BUILT PLANS and RBF Field Memorandums and review of the accessible invert elevations of drainage structures.

RBF is not responsible for the accuracy or completeness of electronic copies of this plan sheet.

Date of AS-CONSTRUCTED PLANS preparation: June 2000

AS-BUILT PLANS
CONTRACT NO. 11-233504
DATE COMPLETED 6-30-99
RE: D. JUAREZ

CONTOUR GRADING AND DRAINAGE PLAN
(LOCATION 2)
DETAIL

SCALE: 1:200

D-3

DESIGN OVERSIGHT — STATE OF CALIFORNIA - DEPARTMENT OF TRANSPORTATION — CHRISTIAN HERENCIA — NPDES

DATE	REVISED BY	DATE REVISED
4/98	NYW	4/98

CALCULATED/DESIGNED BY — CHECKED BY — MC

$DATE$ $TIME$ $FILE$

FOR REDUCED PLANS ORIGINAL SCALE IN MILLIMETERS 0 20 40 60 80

USERNAME => $USER
DGN FILE => $REQUEST

CU 11332 — EA 23350!

LAST REVISION DATE PLOTTED => $DATE
05-09-98 TIME PLOTTED => $TIME

DIST	COUNTY	ROUTE	KILOMETER POST TOTAL PROJECT	SHEET NO.	TOTAL SHEETS
11	SD	5,15	Var	15	41

Caltrans Metric

REGISTERED CIVIL ENGINEER DATE

5-25-98
PLANS APPROVAL DATE

REGISTERED PROFESSIONAL ENGINEER
No.
Exp.
CIVIL
STATE OF CALIFORNIA

ROBERT BEIN, WILLIAM FROST & ASSOCIATES
14725 ALTON PARKWAY
IRVINE, CA 92618

The State of California or its officers or agents shall not be responsible for the accuracy or completeness of electronic copies of this plan sheet.

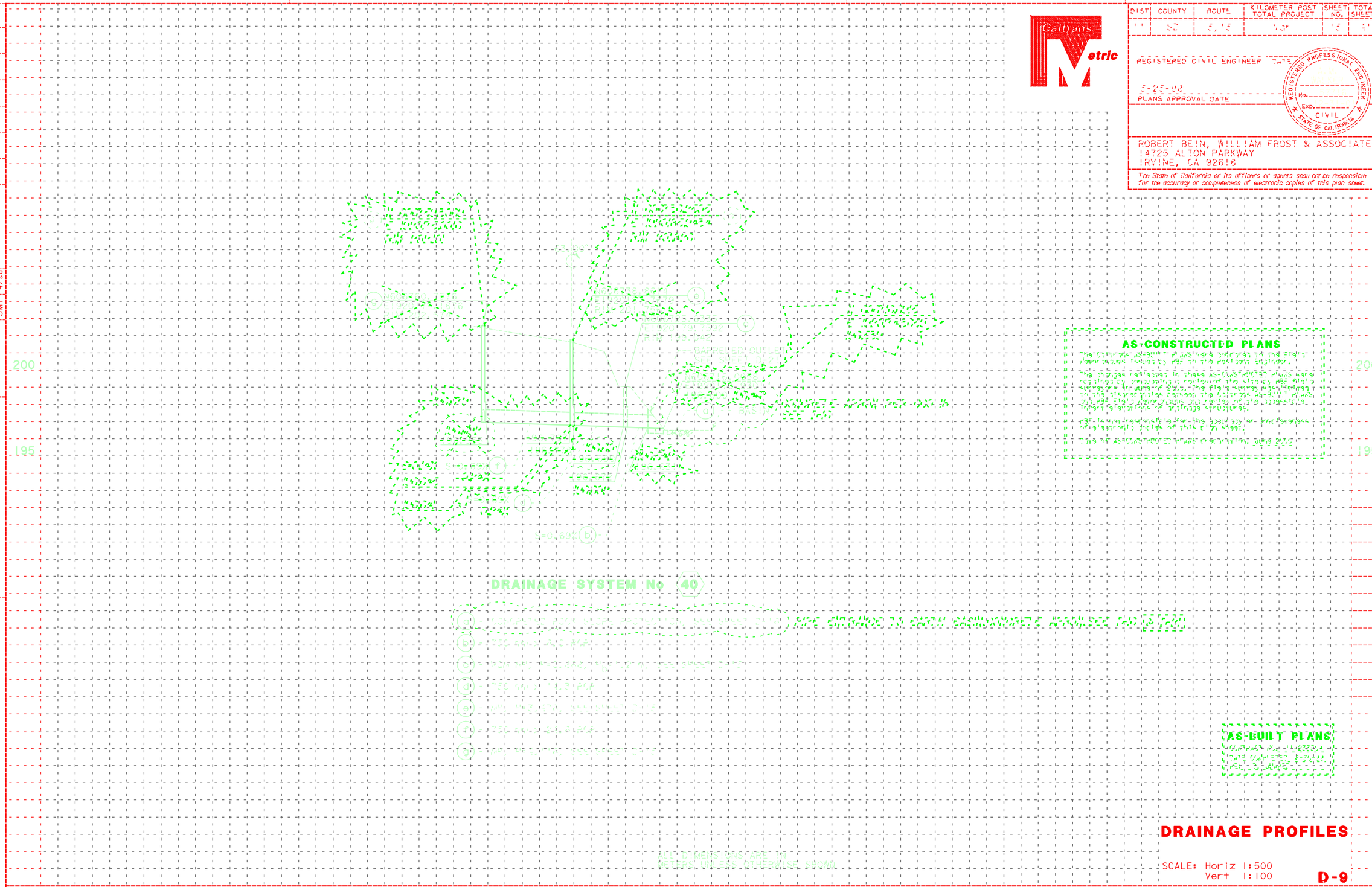

AS-CONSTRUCTED PLANS

The Caltrans AS-BUILT PLANS were compared to the Field Memorandum issued by PBF to the Resident Engineer.

The changes reflected in these AS-CONSTRUCTED PLANS were obtained by conducting a review of the site by PBF field surveyors in June of 2005. The field surveyors made limited to the discrepancies between the Caltrans AS-BUILT PLANS and PBF Field Memorandum and review of the accessible Invert elevations of drainage structures.

PBF is not responsible for the accuracy or completeness of electronic copies of this plan sheet.

Date of AS-CONSTRUCTED PLANS preparation: June 2005

AS-BUILT PLANS

CONTRACT NO. 11-233501
DATE COMPLETED 8-30-99
REF. 3 DRAWING

ALL DIMENSIONS ARE IN METERS UNLESS OTHERWISE SHOWN

DRAINAGE PROFILES

SCALE: Horiz 1:500
Vert 1:100

D-9

STATE OF CALIFORNIA - DEPARTMENT OF TRANSPORTATION
Caltrans
NPDES
DESIGN OVERSIGHT
CHRISTIAN HERENCIA

CALCULATED/ DESIGNED BY	CHECKED BY	DATE	REVISED BY	DATE REVISED
AMW	SMT	4/98	4/98	

Station
Exp
Emp

FOR REDUCED PLANS
ORIGINAL SCALE IN MILLIMETERS
0 20 40 60 80

USERNAME => BUSEP
DGN FILE => BPEQUEST

CU 11332

EA 233501

DIST	COUNTY	ROUTE	KILOMETER POST TOTAL PROJECT	SHEET NO.	TOTAL SHEETS
11	SD	5,15	Var	18	41

REGISTERED CIVIL ENGINEER DATE

5-25-98

PLANS APPROVAL DATE

REGISTERED PROFESSIONAL ENGINEER No. Exp. CIVIL STATE OF CALIFORNIA

ROBERT BEIN, WILLIAM FROST & ASSOCIATES
14725 ALTON PARKWAY
IRVINE, CA 92618

The State of California or its officers or agents shall not be responsible for the accuracy or completeness of electronic copies of this plan sheet.

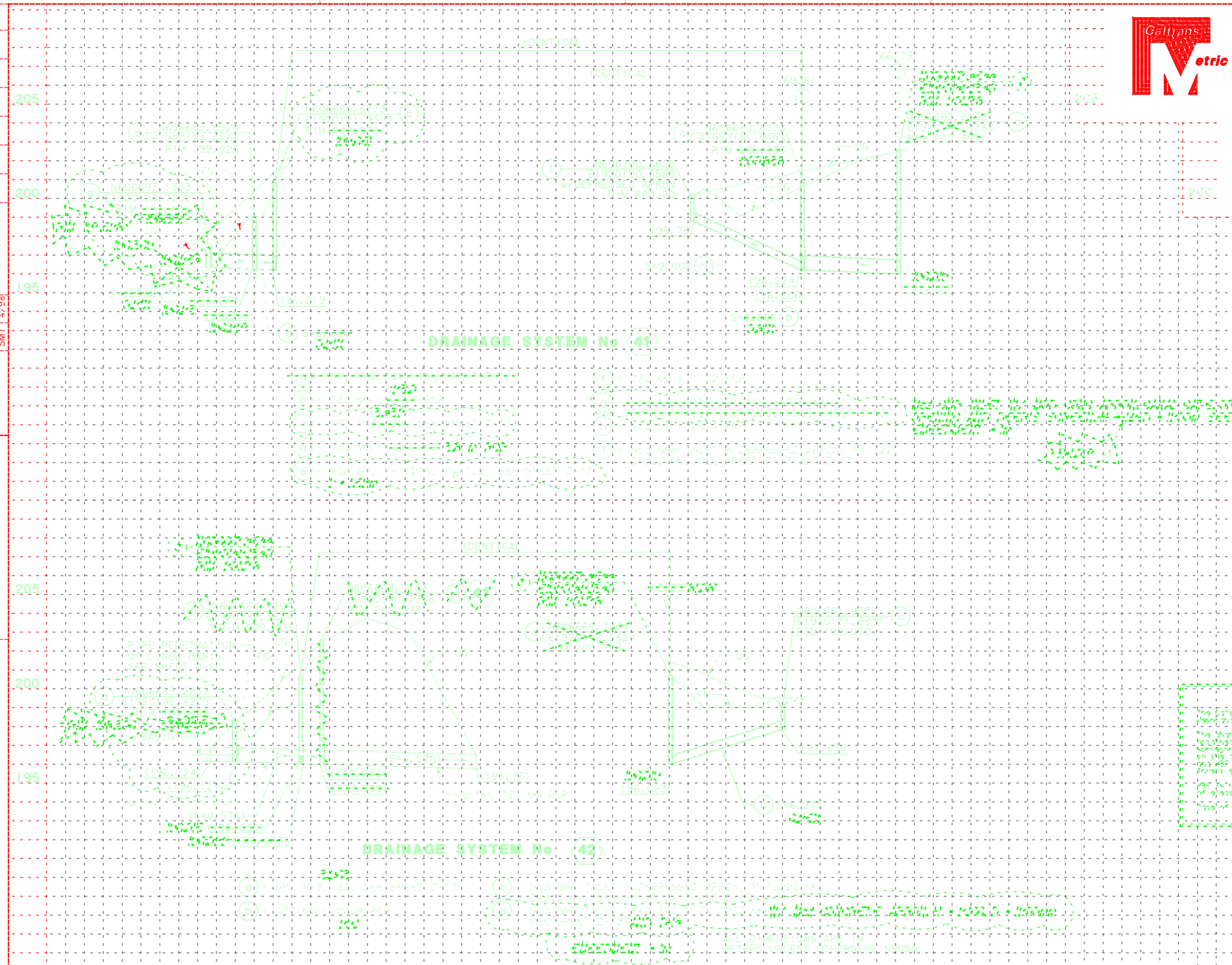

AS-CONSTRUCTED PLANS

The Caltrans AS-BUILT PLANS were compared to the Field Memorandums issued by PBF to the Resident Engineer.

The changes reflected in these AS-CONSTRUCTED PLANS were obtained by conducting a review of the site by PBF field surveyors in June of 2000. The field survey was limited to the discrepancies between the Caltrans AS-BUILT PLANS and PBF field memorandums as a review of the accessible invert elevations of drainage structures.

PBF is not responsible for the accuracy or completeness of electronic copies of this plan sheet.

Date of AS-CONSTRUCTED PLANS preparation: June 2000

DRAINAGE PROFILES

SCALE: Horiz 1:500
Vert 1:100

D-10

CALCULATED/ DESIGNED BY	AMW	DATE 4/98	REVISED BY
CHECKED BY	SMT	4/98	DATE REVISED

DESIGN OVERSIGHT
CHRISTIAN HERENCIA

STATE OF CALIFORNIA - DEPARTMENT OF TRANSPORTATION
NPDES
Caltrans

Station
Exc
Emb

FOR REDUCED PLANS ORIGINAL SCALE IN MILLIMETERS 0 20 40 60 80

USERNAME => $USER
DGN FILE => $REQUEST

CU 11332

EA 233501

DIST	COUNTY	ROUTE	KILOMETER POST TOTAL PROJECT	SHEET NO.	TOTAL SHEETS
11	SD	5,15	Var	19	41

REGISTERED CIVIL ENGINEER — DATE

A.M. WALKER
No. 57716
Exp. 12-31-01
CIVIL
STATE OF CALIFORNIA
REGISTERED PROFESSIONAL ENGINEER

5-25-98
PLANS APPROVAL DATE

ROBERT BEIN, WILLIAM FROST & ASSOCIATES
14725 ALTON PARKWAY
IRVINE, CA 92618

The State of California or its officers or agents shall not be responsible for the accuracy or completeness of electronic copies of this plan sheet.

AS-CONSTRUCTED PLANS

The Caltrans AS-BUILT PLANS were compared to the Field Memorandums issued by RBF to the Resident Engineer.

The changes reflected in these AS-CONSTRUCTED PLANS were obtained by conducting a review of the site by RBF field surveyors in June of 2000. The field survey was limited to the discrepancies between the Caltrans AS-BUILT PLANS and RBF Field Memorandums and review of the accessible invert elevations of drainage structures.

RBF is not responsible for the accuracy or completeness of electronic copies of this plan sheet.

Date of AS-CONSTRUCTED PLANS preparation: June 2000

Caltrans Metric

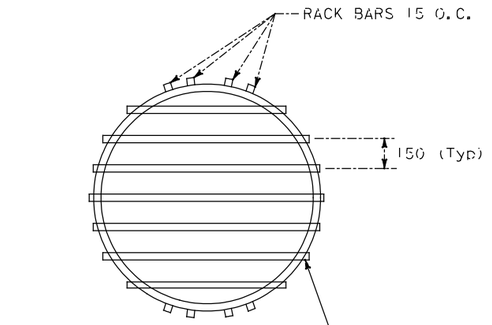

DEBRIS RACK CAGE

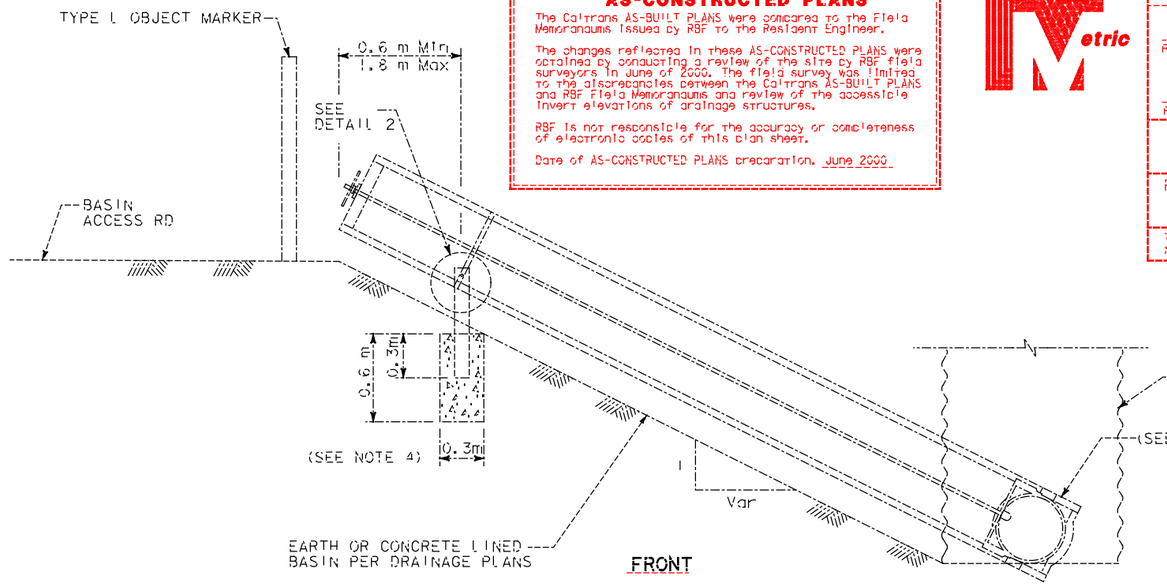

CANAL GATE SECTION

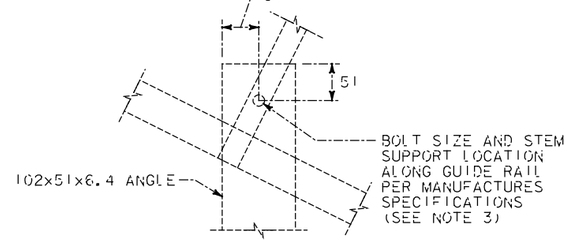

DETAIL 2

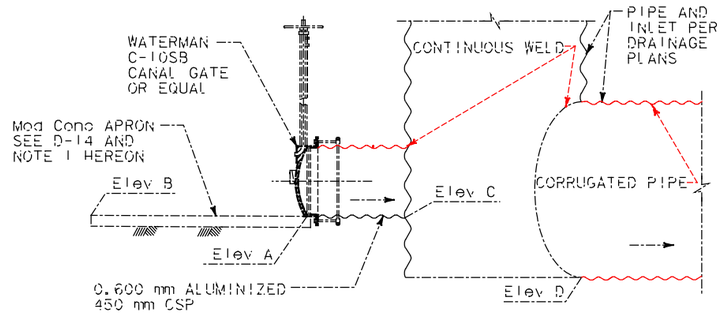

ELEVATION

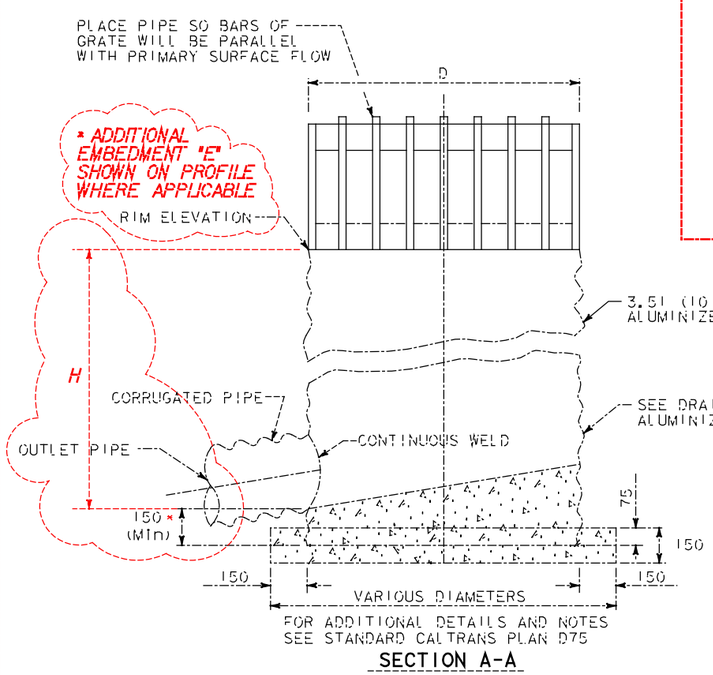

SECTION A-A

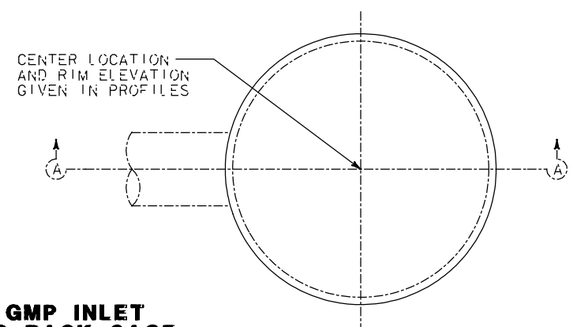

MODIFIED GMP INLET WITH DEBRIS RACK CAGE

ALL DIMENSIONS ARE IN METERS UNLESS OTHERWISE SHOWN

NOTE:

1. FORM MODIFIED CONCRETE APRON ADJACENT TO THE CANAL GATE CONNECTION, AS NECESSARY, TO ACCOMODATE CANAL GATE HARDWARE.
2. ELEVATIONS PER DRAINAGE PLANS.
3. ALL HARDWARE AND FABRICATION MATERIAL SHALL BE STAINLESS STEEL.
4. SUPPORT FOOTING IS 0.3 m SQUARE.

AS-BUILT PLANS
CONTRACT NO. 11-233504
DATE COMPLETED 6-30-99
RE: D. JUAREZ

DRAINAGE DETAILS

D-13

NO SCALE

DATE	REVISED BY	DATE REVISED
4/98	AMW	4/98
	SMT	

CALCULATED/DESIGNED BY
CHECKED BY

DESIGN OVERSIGHT
CHRISTIAN HERENCIA

STATE OF CALIFORNIA - DEPARTMENT OF TRANSPORTATION
NPDES
Caltrans

$FILE$
$TIME$
$DATE$

LAST REVISION: DATE PLOTTED => $DATE
05-09-98 TIME PLOTTED => $TIME

FOR REDUCED PLANS ORIGINAL SCALE IN MILLIMETERS 0 20 40 60 80

USERNAME => $USER
DGN FILE => $REQUEST

CU 11332

EA 23350!

AS-CONSTRUCTED PLANS

The Caltrans AS-BUILT PLANS were compared to the Field Memorandums issued by RBF to the Resident Engineer.

The changes reflected in these AS-CONSTRUCTED PLANS were obtained by conducting a review of the site by RBF field surveyors in June of 2000. The field survey was limited to the discrepancies between the Caltrans AS-BUILT PLANS and RBF Field Memorandums and review of the accessible invert elevations of drainage structures.

RBF is not responsible for the accuracy or completeness of electronic copies of this plan sheet.

Date of AS-CONSTRUCTED PLANS preparation: June 2000

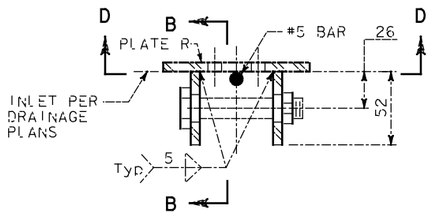

TRASH RACK FASTENER

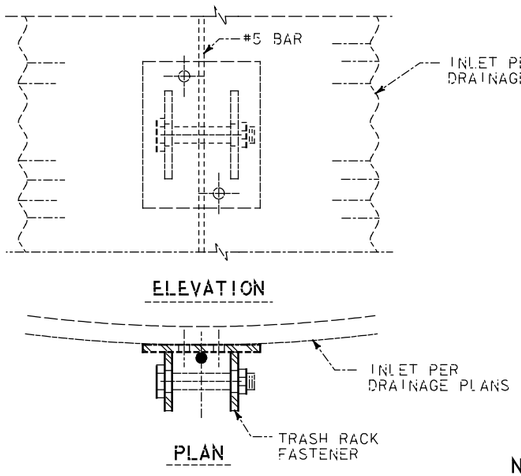

DETAIL 1

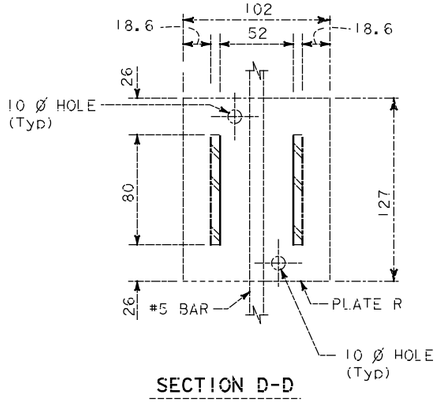

SECTION D-D

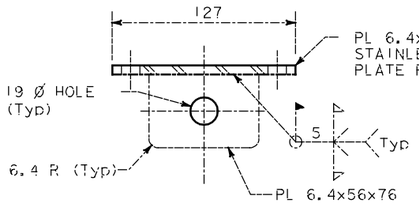

SECTION B-B

NOTES:

1. TRASH RACK FASTENERS SHALL BE BOLTED TO INLET AT LOCATIONS SHOWN.
2. ALL HARDWARE AND FABRICATION MATERIALS SHALL BE STAINLESS STEEL.
3. ALL BARS SHALL BE STAINLESS STEEL.

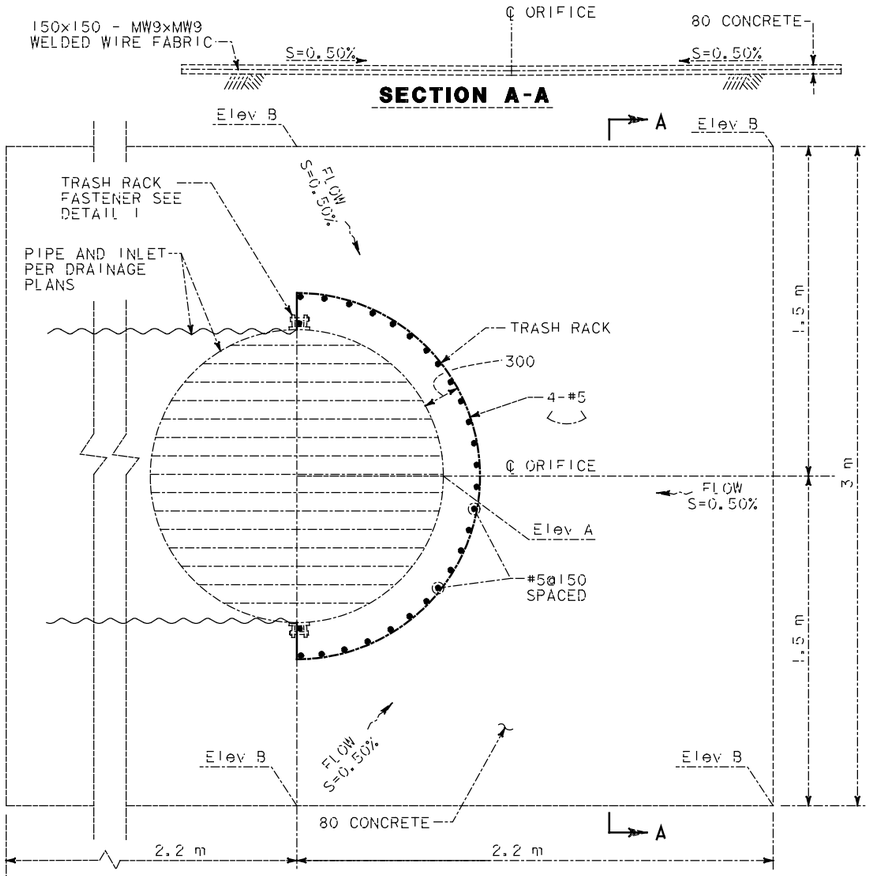

MODIFIED CONCRETE APRON

SHOWN WITH TRASH RACK PLAN

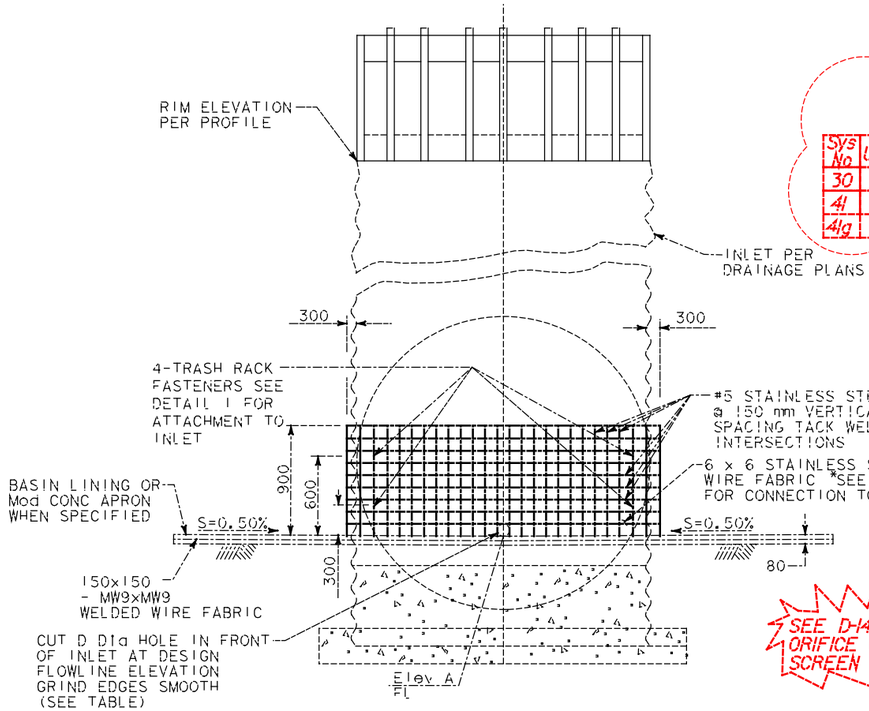

ORIFICE OPENING AND DEBRIS SCREEN FRAME

ALL DIMENSIONS ARE IN MILLIMETERS UNLESS OTHERWISE SHOWN

Sys No	UNIT	D (mm)	Elev A	Elev B
30	f	~~44.5~~	6.386	6.395
41	g	44.5	~~196.94~~	~~N/A~~

Sys No	UNIT	Riser D1(mm)	Riser Elev A	Apron Elev B	Riser D2(mm)	Riser Elev C	H m
30	f	30.18	6.386	6.395	13.97	6.836	0.5
41	g	38.85	~~196.4~~	~~196.41~~	26.65	~~197.42~~	~~1.15~~
41g		N/A	196.304	196.314	N/A	197.325	1.149

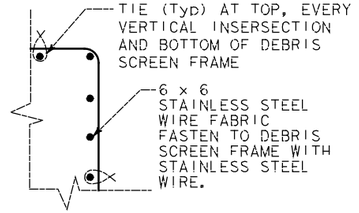

DETAIL 2

SEE D-14A FOR AS-CONSTRUCTED ORIFICE OPENING AND DEBRIS SCREEN FRAME

AS-BUILT PLANS
CONTRACT NO. 11-233504
DATE COMPLETED 6-30-99
RE: D. JUAREZ

DRAINAGE DETAILS

NO SCALE

D-14

DIST	COUNTY	ROUTE	KILOMETER POST TOTAL PROJECT	SHEET NO.	TOTAL SHEETS
11	SD	5,15	Var	20	41

REGISTERED CIVIL ENGINEER — DATE

A.M. WALKER No. 57716 Exp. 12-31-01 CIVIL — REGISTERED PROFESSIONAL ENGINEER — STATE OF CALIFORNIA

5-25-98
PLANS APPROVAL DATE

ROBERT BEIN, WILLIAM FROST & ASSOCIATES
14725 ALTON PARKWAY
IRVINE, CA 92618

The State of California or its officers or agents shall not be responsible for the accuracy or completeness of electronic copies of this plan sheet.

DESIGN OVERSIGHT — CHRISTIAN HERENCIA
CALCULATED/DESIGNED BY — AMW — DATE 4/98 — REVISED BY
CHECKED BY — SMT — 4/98 — DATE REVISED
STATE OF CALIFORNIA - DEPARTMENT OF TRANSPORTATION — NPDES — Caltrans
#FILE& #TIME& #DATE&

FOR REDUCED PLANS ORIGINAL SCALE IN MILLIMETERS 0 20 40 60 80
USERNAME => &USER
DGN FILE => &REQUEST
CU 11332
EA 23350!
LAST REVISION 05-09-98 DATE PLOTTED => &DATE TIME PLOTTED => &TIME

DIST	COUNTY	ROUTE	KILOMETER POST TOTAL PROJECT	SHEET NO.	TOTAL SHEETS
11	SD	5,15	Var	20	41

REGISTERED CIVIL ENGINEER DATE

5-25-98
PLANS APPROVAL DATE

REGISTERED PROFESSIONAL ENGINEER
A.M. WALKER
No. 57716
Exp. 12-31-01
CIVIL
STATE OF CALIFORNIA

ROBERT BEIN, WILLIAM FROST & ASSOCIATES
14725 ALTON PARKWAY
IRVINE, CA 92618

The State of California or its officers or agents shall not be responsible for the accuracy or completeness of electronic copies of this plan sheet.

AS-CONSTRUCTED PLANS

The Caltrans AS-BUILT PLANS were compared to the Field Memorandums issued by RBF to the Resident Engineer.

The changes reflected in these AS-CONSTRUCTED PLANS were obtained by conducting a review of the site by RBF field surveyors in June of 2000. The field survey was limited to the discrepancies between the Caltrans AS-BUILT PLANS and RBF Field Memorandums and review of the accessible invert elevations of drainage structures.

RBF is not responsible for the accuracy or completeness of electronic copies of this plan sheet.

Date of AS-CONSTRUCTED PLANS preparation. June 2000

AVERAGE AVERAGE

Sys No	UNIT	Riser D1(mm)	Riser Elev A	Apron Elev B	Riser D2(mm)	Riser Elev C	H m
30	f	30	6.384	6.384	30	6.813	0.561
41	g	25	196.431	196.406	25	197.450	1.097

Sys No	UNIT	D(mm)	Elev A	Elev B
30	f	~~44.5~~	~~6.386~~	6.395
41	g	44.5	~~195.94~~	~~N/A~~

Sys No	UNIT	Riser D1(mm)	Riser Elev A	Apron Elev B	Riser D2(mm)	Riser Elev C	H m
30	f	30.18	6.386	6.395	13.97	6.836	0.5
41	g	38.85	~~196.4~~	~~196.41~~	26.65	~~197.42~~	~~1.15~~
41g		N/A	196.304	196.314	N/A	197.325	1.149

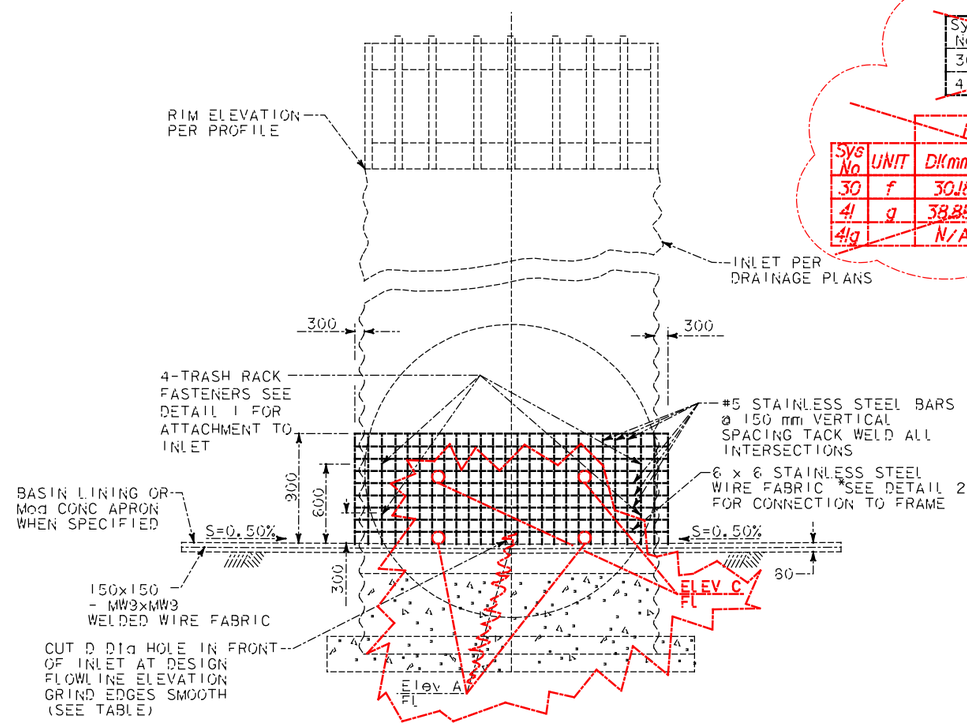

ORIFICE OPENING AND DEBRIS SCREEN FRAME

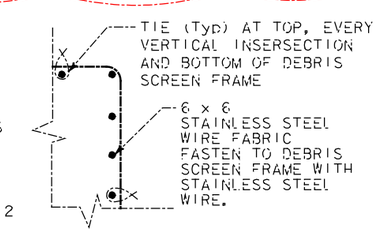

DETAIL 2

ALL DIMENSIONS ARE IN MILLIMETERS UNLESS OTHERWISE SHOWN

AS-BUILT PLANS
CONTRACT NO. 11-233504
DATE COMPLETED 6-30-99
RE: D. JUAREZ

DRAINAGE DETAILS

NO SCALE

D-14A

STATE OF CALIFORNIA - DEPARTMENT OF TRANSPORTATION
Caltrans
NPDES
DESIGN OVERSIGHT
CHRISTIAN HERENCIA
CALCULATED/DESIGNED BY AMW DATE 4/98
CHECKED BY SMT 4/98
REVISED BY
DATE REVISED

$DATE$ $TIME$ $FILE$

LAST REVISION 05-09-98 DATE PLOTTED => $DATE TIME PLOTTED => $TIME

FOR REDUCED PLANS ORIGINAL SCALE IN MILLIMETERS 0 20 40 60 80
USERNAME => $USER DGN FILE => $REQUEST
CU 11332
EA 233501

D_2	H_b	L
675 mm OR LESS	0.9 m	1.2 m
750 mm TO 975 mm INCLUSIVE	1.2 m	1.2 m

EXCEPTIONS TO BE NOTED ON PLANS.

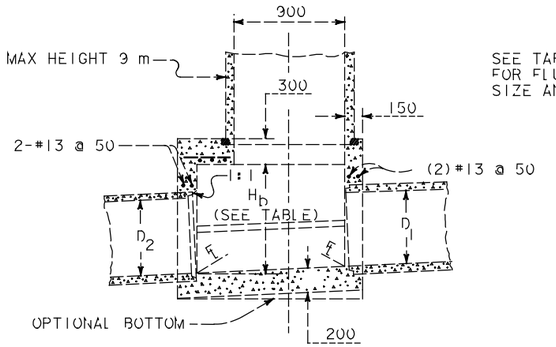

SECTION G-G

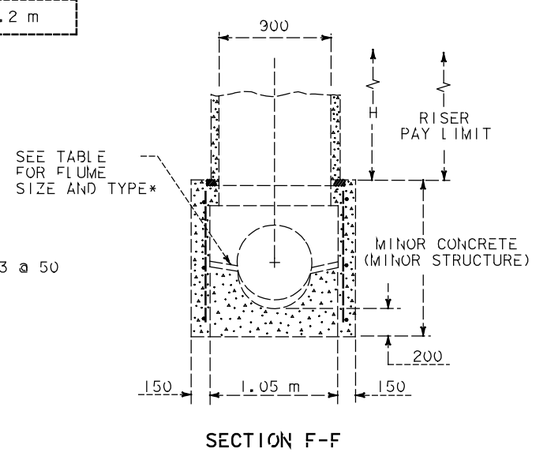

SECTION F-F

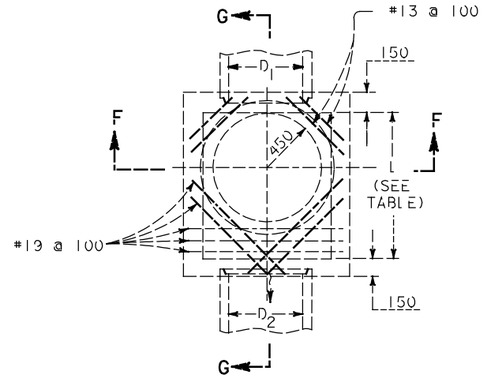

PLAN

FOR USE WHEN D_2 (OUTLET PIPE Dia) IS 975 mm OR LESS

STORM DRAIN & MANHOLE STRUCTURE (TYPE X BASE)

NOTES:

1. RISERS MAY BE MADE UP OF 150 mm, 200 mm, 450 mm, 600 mm, OR 1200 mm SECTIONS.
2. EACH RISER SHALL HAVE A LADDER, AS DETAILED ON STANDARD PLAN D74C. THE LADDER SHALL BE SUSPENDED INTO BASE STRUCTURE.
3. ALL PRECAST COMPONENTS FOR UPPER PORTION TYPE MH SHALL BE REINFORCED WITH 6 mm DIAMETER STEEL WOUND SPIRALLY @ 100 mm CENTERS.
4. H AND Hb SHALL BE AS SPECIFIED ON PLANS.
5. REINFORCING STEEL SHALL BE #13 BARS @ 450 mm CENTERS PLACED 40 mm CLEAR TO INSIDE OF BOX UNLESS OTHERWISE SHOWN.
6. PIPE(S) MAY BE PLACED IN ANY WALL.
7. DESIGN UNIT STRESSES: F_S = 140 MPa, n= 10, F_C = 10 MPa.
8. CENTER OF RISER SHALL BE LOCATED OVER THE CENTERLINE OF MAIN STORM DRAIN.
9. THICKNESS OF DECK SHALL VARY WHEN NECESSARY TO PROVIDE LEVEL MANHOLE SEAT.

* INSTALLED AT WATER QUALITY MONITORING MANHOLE LOCATIONS ONLY.

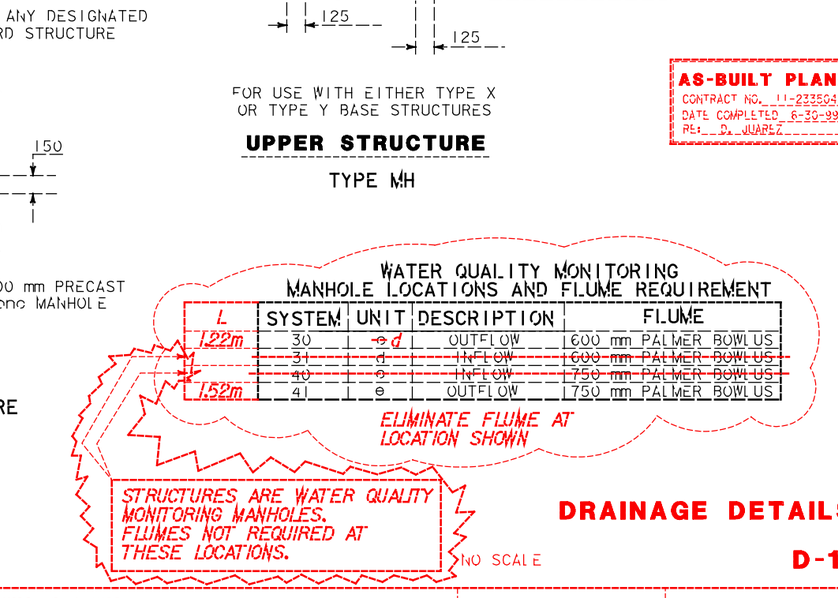

FOR USE WITH EITHER TYPE X OR TYPE Y BASE STRUCTURES

UPPER STRUCTURE

TYPE MH

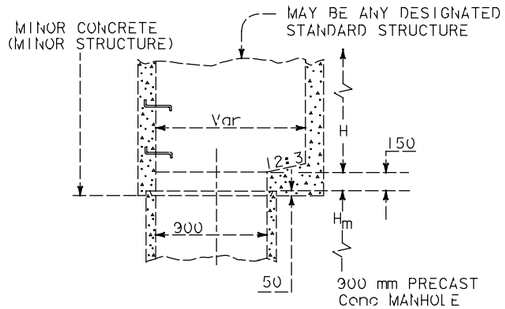

UPPER STRUCTURE

TYPICAL UPPER STRUCTURE AND MANHOLE JUNCTION

WATER QUALITY MONITORING MANHOLE LOCATIONS AND FLUME REQUIREMENT

L	SYSTEM	UNIT	DESCRIPTION	FLUME
1.22m	30	d	OUTFLOW	600 mm PALMER BOWLUS
	31	d	INFLOW	600 mm PALMER BOWLUS
1.52m	40	e	INFLOW	750 mm PALMER BOWLUS
	41	e	OUTFLOW	750 mm PALMER BOWLUS

ELIMINATE FLUME AT LOCATION SHOWN

STRUCTURES ARE WATER QUALITY MONITORING MANHOLES. FLUMES NOT REQUIRED AT THESE LOCATIONS.

NO SCALE

ALL DIMENSIONS ARE IN MILLIMETERS UNLESS OTHERWISE SHOWN

DRAINAGE DETAILS

D-15

DIST	COUNTY	ROUTE	KILOMETER POST TOTAL PROJECT	SHEET NO.	TOTAL SHEETS
11	SD	5,15	Var	21	41

REGISTERED CIVIL ENGINEER — DATE

A. M. WALKER No. 57716 Exp 12-31-01 CIVIL STATE OF CALIFORNIA — REGISTERED PROFESSIONAL ENGINEER

5-25-98
PLANS APPROVAL DATE

ROBERT BEIN, WILLIAM FROST & ASSOCIATES
14725 ALTON PARKWAY
IRVINE, CA 92618

The State of California or its officers or agents shall not be responsible for the accuracy or completeness of electronic copies of this plan sheet.

AS-CONSTRUCTED PLANS

The Caltrans AS-BUILT PLANS were compared to the Field Memorandums issued by RBF to the Resident Engineer.

The changes reflected in these AS-CONSTRUCTED PLANS were obtained by conducting a review of the site by RBF field surveyors in June of 2000. The field survey was limited to the discrepancies between the Caltrans AS-BUILT PLANS and RBF Field Memorandums and review of the accessible Invert elevations of drainage structures.

RBF is not responsible for the accuracy or completeness of electronic copies of this plan sheet.

Date of AS-CONSTRUCTED PLANS preparation: June 2000

AS-BUILT PLANS
CONTRACT NO. 11-233504
DATE COMPLETED 6-30-99
RE: D. JUAREZ

DESIGN OVERSIGHT — CHRISTIAN HERENCIA
NPDES
STATE OF CALIFORNIA - DEPARTMENT OF TRANSPORTATION
Caltrans
CALCULATED/DESIGNED BY — AMW — DATE REVISED 4/98
CHECKED BY — SMT — DATE REVISED 4/98
&FILES
&TIMES
&DATES

LAST REVISION — DATE PLOTTED => &DATE — 05-08-98 — TIME PLOTTED => &TIME

FOR REDUCED PLANS ORIGINAL SCALE IN MILLIMETERS 0 20 40 60 80
USERNAME => &USER
DGN FILE => &REQUEST
CU 11332
EA 23350!

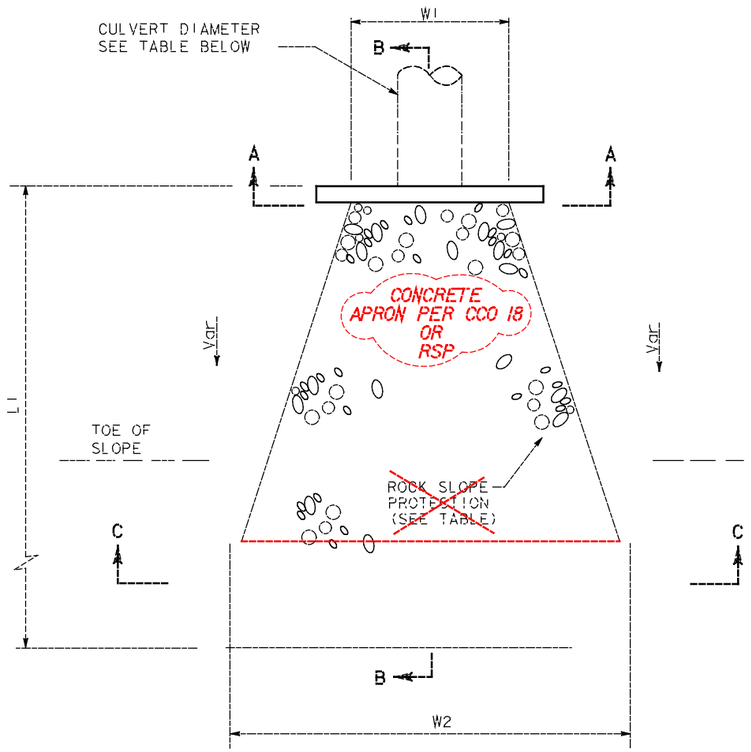

PLAN

NOTE:
FILTER FABRIC TO BE PLACED UNDER ALL ROCK SLOPE PROTECTION PER FILTER FABRIC OVERLAP DETAIL.

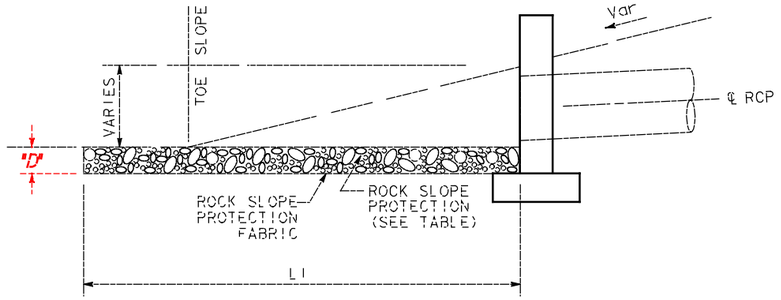

SECTION B-B

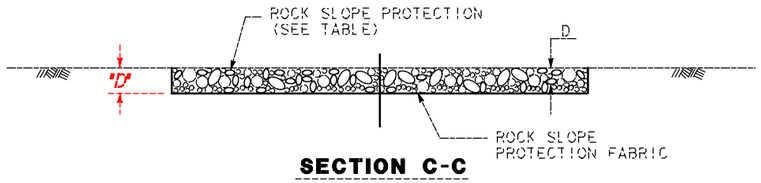

SECTION C-C

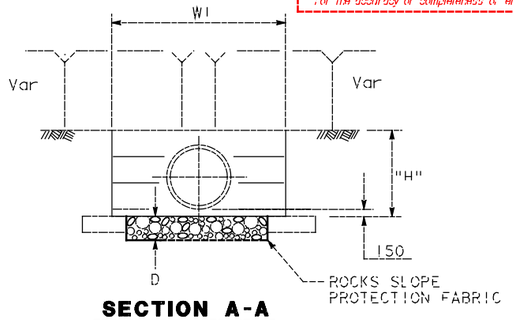

SECTION A-A

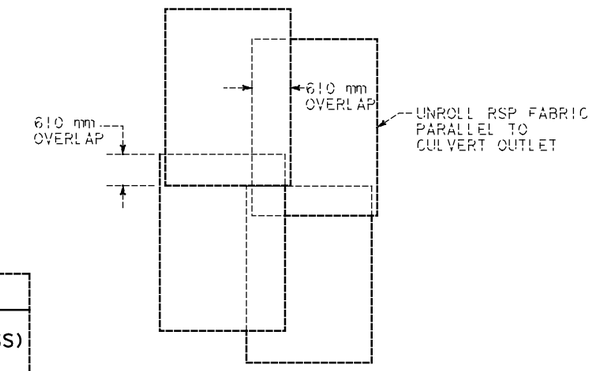

FILTER FABRIC OVERLAP

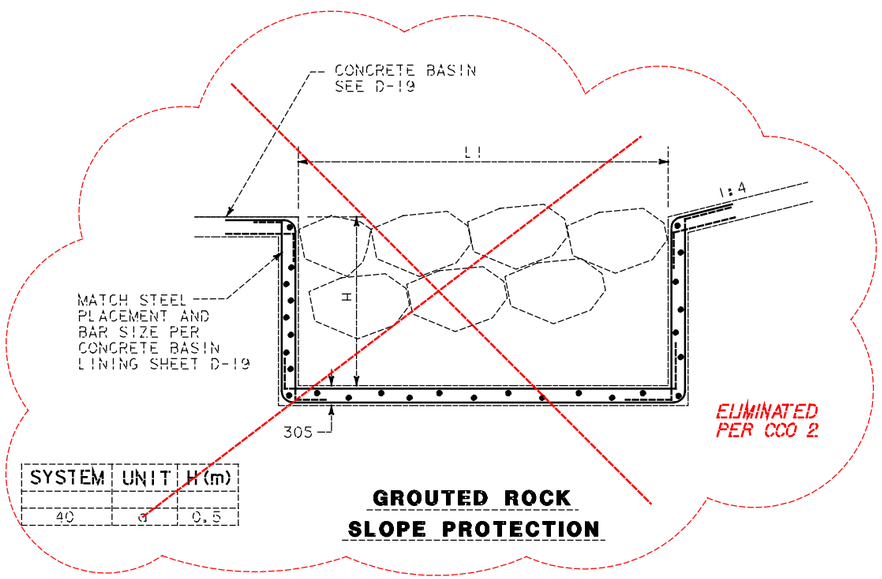

SYSTEM	UNIT	H(m)
40	a	0.5

GROUTED ROCK SLOPE PROTECTION

CONCRETE APRON OR

ROCK SLOPE PROTECTION (METHOD B)

SYSTEM	UNIT	CULVERT DIAMETER	WIDTH "W1"	WIDTH "W2"	LENGTH "L1"	TYPE	(THICKNESS) "D"
30	a	DITCH	3.3 m	3.3 m	2 m	1/4 TONNE	1.0 m
31	a	600	4 m	4 m	4 m	1/4 TONNE	1.5 m
31	!	N/A	SEE D-18	SEE D-18	30 m	FACING	SEE D-18
40	a	750	2.6 ~~3~~ m	6.5 ~~10~~ m	11 ~~8~~ m	~~FACING~~	0.3m ~~CONCRETED~~
~~50~~	~~a~~	~~900~~	~~SEE D-21~~	~~SEE D-21~~	~~SEE D-21~~	~~1/4 TONNE~~	~~900~~

CONCRETE APRON PER CCO 18

RSP ELIMINATED PER QUANTITY ADJUSTMENT

ROCK SLOPE PROTECTION

ALL DIMENSIONS ARE IN MILLIMETERS UNLESS OTHERWISE SHOWN

AS-CONSTRUCTED PLANS

The Caltrans AS-BUILT PLANS were compared to the Field Memorandums Issued by RBF to the Resident Engineer.

The changes reflected in these AS-CONSTRUCTED PLANS were obtained by conducting a review of the site by RBF field surveyors in June of 2000. The field survey was limited to the discrepancies between the Caltrans AS-BUILT PLANS and RBF Field Memorandums and review of the accessible Invert elevations of drainage structures.

RBF is not responsible for the accuracy or completeness of electronic copies of this plan sheet.

Date of AS-CONSTRUCTED PLANS preparation: June 2000

AS-BUILT PLANS
CONTRACT NO. 11-233504
DATE COMPLETED 8-30-99
RE: D. JUAREZ

DRAINAGE DETAILS

NO SCALE

D-16

DIST	COUNTY	ROUTE	KILOMETER POST TOTAL PROJECT	SHEET NO.	TOTAL SHEETS
11	SD	5,15	Var	22	41

REGISTERED CIVIL ENGINEER — DATE

A. M. WALKER No. 57716 Exp. 12-31-01 CIVIL — REGISTERED PROFESSIONAL ENGINEER — STATE OF CALIFORNIA

5-25-98
PLANS APPROVAL DATE

ROBERT BEIN, WILLIAM FROST & ASSOCIATES
14725 ALTON PARKWAY
IRVINE, CA 92618

The State of California or its officers or agents shall not be responsible for the accuracy or completeness of electronic copies of this plan sheet.

Caltrans Metric

DESIGN OVERSIGHT — CHRISTIAN HERENCIA

CALCULATED/ DESIGNED BY	CHECKED BY	DATE	REVISED BY	DATE REVISED
AMW	SMT	4/98		

STATE OF CALIFORNIA - DEPARTMENT OF TRANSPORTATION — NPDES — Caltrans

LAST REVISION => DATE PLOTTED => &DATE
05-09-98 TIME PLOTTED => &TIME

&FILES
&TIMES
&DATES

FOR REDUCED PLANS ORIGINAL SCALE IN MILLIMETERS 0 20 40 60 80

USERNAME => &USER
DGN FILE => &REQUEST

CU 11332

EA 23350!

DIST	COUNTY	ROUTE	KILOMETER POST TOTAL PROJECT	SHEET NO.	TOTAL SHEETS
11	SD	5,15	Var	24	41

REGISTERED CIVIL ENGINEER

5-25-98
PLANS APPROVAL DATE

REGISTERED PROFESSIONAL ENGINEER
A.M. WALKER
No. 57716
Exp. 12-31-01
CIVIL
STATE OF CALIFORNIA

ROBERT BEIN, WILLIAM FROST & ASSOCIATES
14725 ALTON PARKWAY
IRVINE, CA 92618

The State of California or its officers or agents shall not be responsible for the accuracy or completeness of electronic copies of this plan sheet.

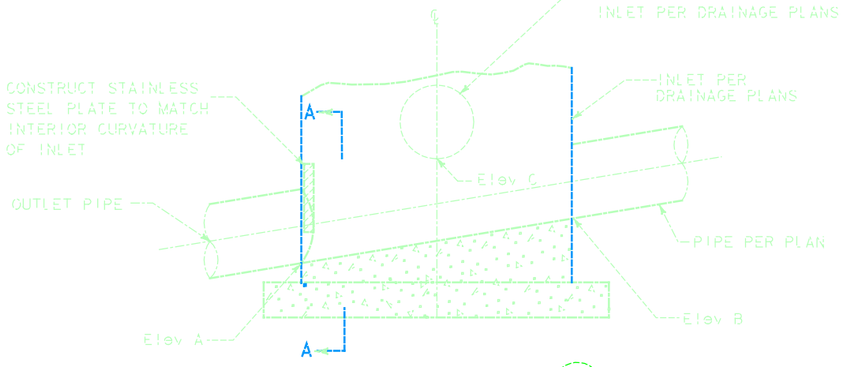

SYSTEM	UNIT	Elev A (m)	Elev B (m)	Elev C (m)	H
50	k	2.550	2.570	2.930	204
50	r	4.000	N/A	4.510	183

FLOW RESTRICTION PLATE

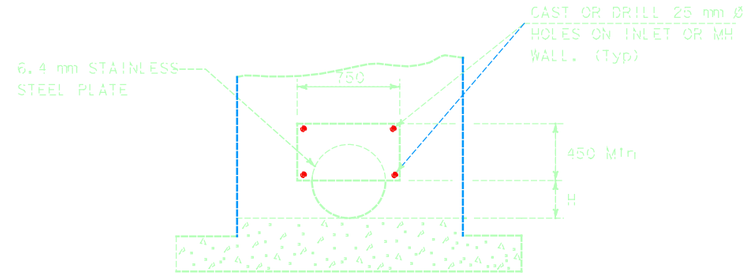

SECTION A-A

AS-CONSTRUCTED PLANS

The Caltrans AS-BUILT PLANS were compared to the Field Memorandums issued by RBF to the Resident Engineer.

The changes reflected in these AS-CONSTRUCTED PLANS were obtained by conducting a review of the site by RBF field surveyors in June of 2000. The field survey was limited to the discrepancies between the Caltrans AS-BUILT PLANS and RBF Field Memorandums and review of the accessible invert elevations of drainage structures.

RBF is not responsible for the accuracy or completeness of electronic copies of this plan sheet.

Date of AS-CONSTRUCTED PLANS preparation. June 2000

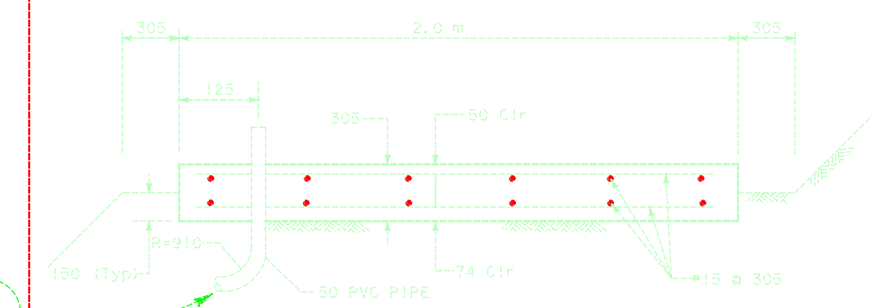

2 x 2 CONCRETE PAD

SCH 40 PVC CONDUIT FROM CONC.PAD TO WATER QUALITY MONITORING MANHOLES

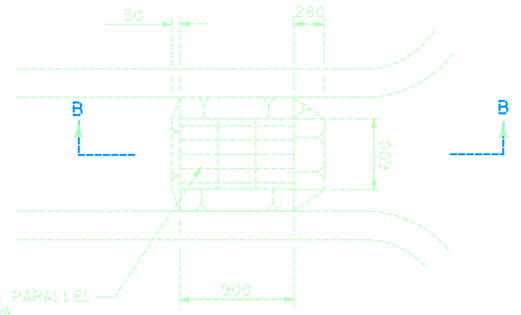

PLAN

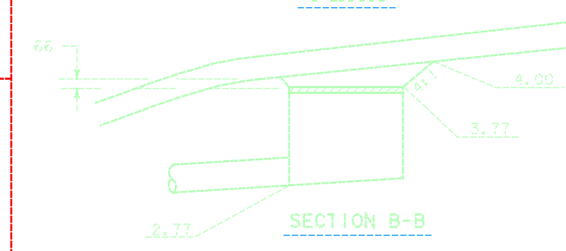

SECTION B-B

G1 INLET
WITHIN AC OVERSIDE DRAIN

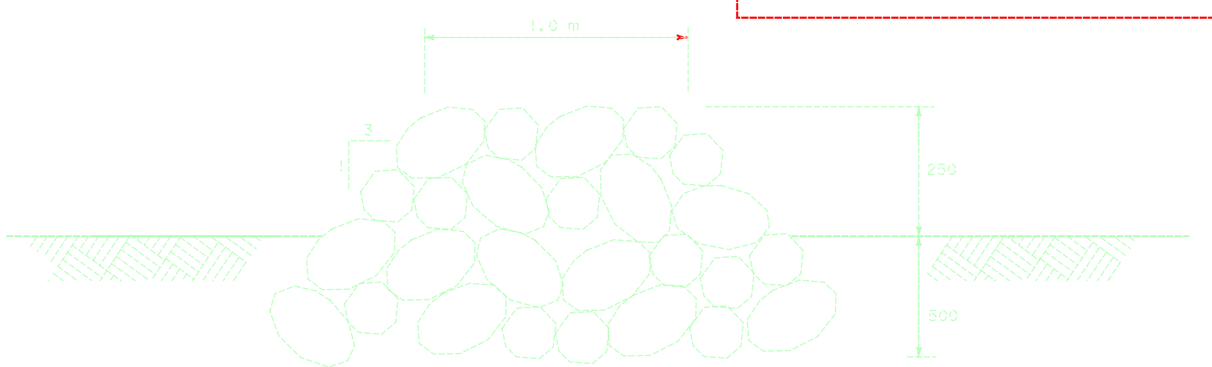

RSP (FACING, METHOD B)
DEFLECTION BERM

AS-BUILT PLANS
CONTRACT NO. 11-233504
DATE COMPLETED 6-30-99
RE: D. JUAREZ

ALL DIMENSIONS ARE IN MILLIMETERS UNLESS OTHERWISE SHOWN

DRAINAGE DETAILS

NO SCALE

D-18

CALCULATED/DESIGNED BY	AMW	DATE 4/98	REVISED BY
CHECKED BY	SMT	4/98	DATE REVISED

DESIGN OVERSIGHT: CHRISTIAN HERENCIA

STATE OF CALIFORNIA - DEPARTMENT OF TRANSPORTATION
NPDES

Caltrans

$DATE$ $TIME$ $FILE$

FOR REDUCED PLANS ORIGINAL SCALE IN MILLIMETERS 0 20 40 60 80

USERNAME => $USER
DGN FILE => $REQUEST

CU 11332

EA 233501

DATE PLOTTED => $DATE
TIME PLOTTED => $TIME

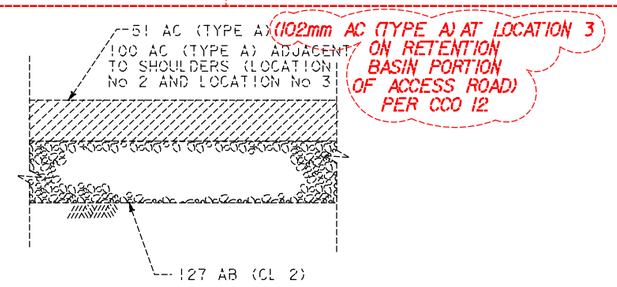

(102mm AC (TYPE A) AT LOCATION 3 ON RETENTION BASIN PORTION OF ACCESS ROAD) PER CCO 12

ASPHALT PAVING DETAIL

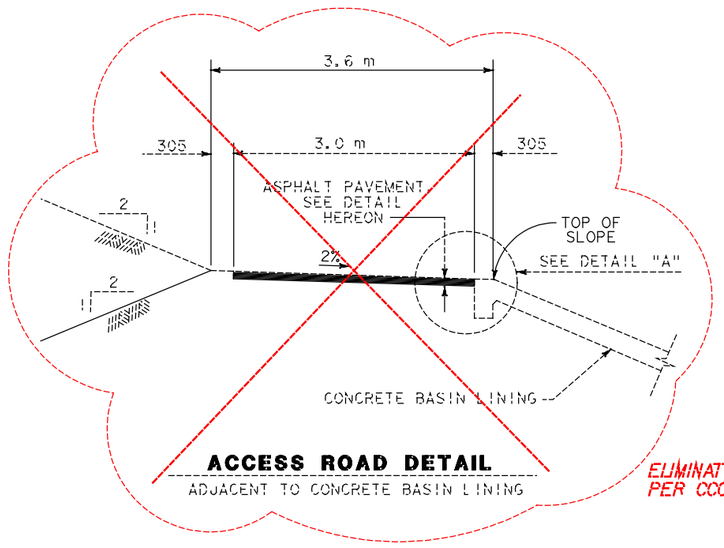

ACCESS ROAD DETAIL

ADJACENT TO CONCRETE BASIN LINING

ELIMINATED PER CCO 2

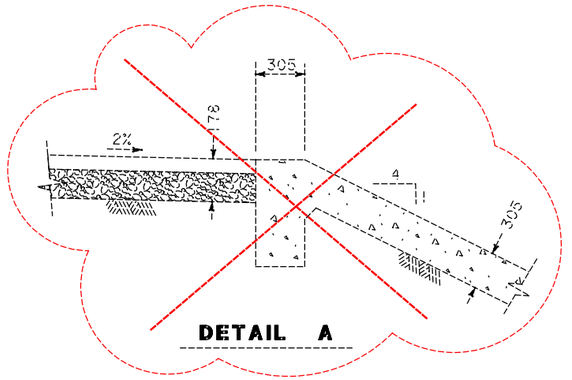

DETAIL A

ELIMINATED PER CCO 2

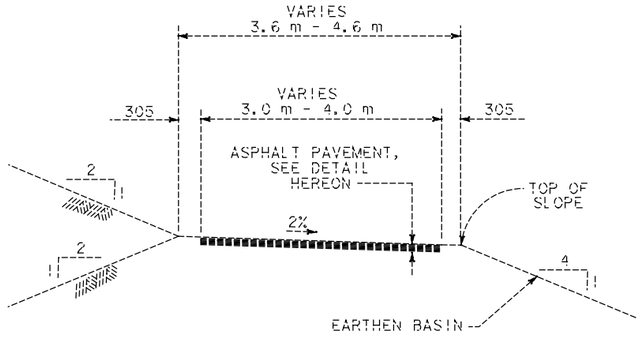

ACCESS ROAD DETAIL

ADJACENT TO EARTHEN BASIN

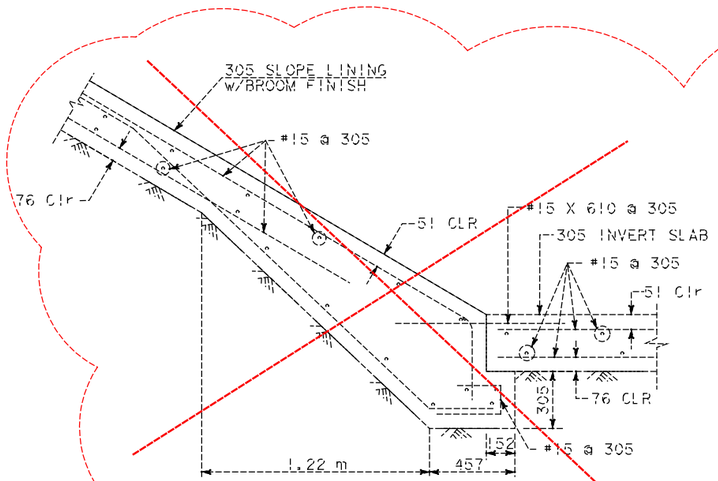

CONCRETE BASIN INVERT LINING

ELIMINATED PER CCO 2

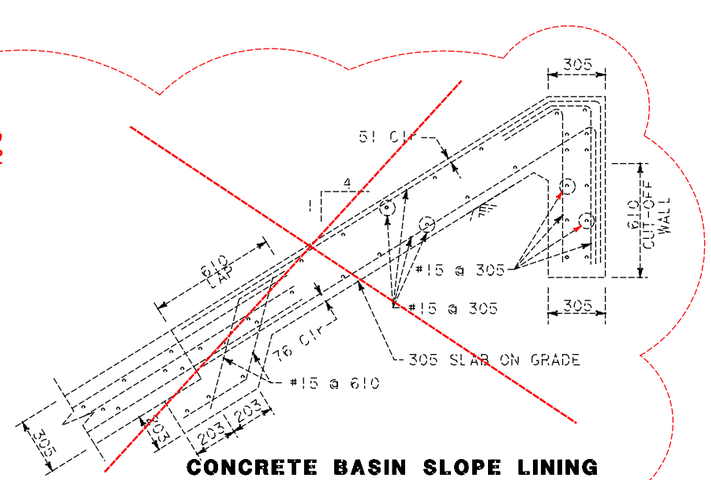

CONCRETE BASIN SLOPE LINING

ALL DIMENSIONS ARE IN MILLIMETERS UNLESSOTHERWISE SHOWN

AS-CONSTRUCTED PLANS

The Caltrans AS-BUILT PLANS were compared to the Field Memorandums issued by RBF to the Resident Engineer.

The changes reflected in these AS-CONSTRUCTED PLANS were obtained by conducting a review of the site by RBF field surveyors in June of 2000. The field survey was limited to the discrepancies between the Caltrans AS-BUILT PLANS and RBF Field Memorandums and review of the accessible invert elevations of drainage structures.

RBF is not responsible for the accuracy or completeness of electronic copies of this plan sheet.

Date of AS-CONSTRUCTED PLANS preparation: June 2000

AS-BUILT PLANS

CONTRACT NO. 11-233504
DATE COMPLETED 6-30-99
RE: D. JUAREZ

DRAINAGE DETAILS

NO SCALE

D-19

DIST	COUNTY	ROUTE	KILOMETER POST TOTAL PROJECT	SHEET NO.	TOTAL SHEETS
11	SD	5,15	Var	25	41

REGISTERED CIVIL ENGINEER

MIKE CHESNEY
No. 48913
Exp. 9-30-00
CIVIL
STATE OF CALIFORNIA

5-25-98
PLANS APPROVAL DATE

ROBERT BEIN, WILLIAM FROST & ASSOCIATES
14725 ALTON PARKWAY
IRVINE, CA 92618

The State of California or its officers or agents shall not be responsible for the accuracy or completeness of electronic copies of this plan sheet.

DATE	REVISED BY	DATE	REVISED BY
4/98	MC	4/98	SMT

CALCULATED/DESIGNED BY
CHECKED BY

DESIGN OVERSIGHT
CHRISTIAN HERENCIA

STATE OF CALIFORNIA - DEPARTMENT OF TRANSPORTATION
NPDES
Caltrans

@FILE$
@TIME$
@DATE$

DATE PLOTTED => @DATE
TIME PLOTTED => @TIME

FOR REDUCED PLANS ORIGINAL SCALE IN MILLIMETERS 0 20 40 60 80

USERNAME => @USER
DGN FILE => @REQUEST

CU 11332 | EA 23350!

DIST	COUNTY	ROUTE	KILOMETER POST TOTAL PROJECT	SHEET NO.	TOTAL SHEETS
11	SD	5,15	Var	26	41

REGISTERED CIVIL ENGINEER

5-25-98
PLANS APPROVAL DATE

REGISTERED PROFESSIONAL ENGINEER
MIKE CHESNEY
No. 48913
Exp. 9-30-00
CIVIL
STATE OF CALIFORNIA

ROBERT BEIN, WILLIAM FROST & ASSOCIATES
14725 ALTON PARKWAY
IRVINE, CA 92618

The State of California or its officers or agents shall not be responsible for the accuracy or completeness of electronic copies of this plan sheet.

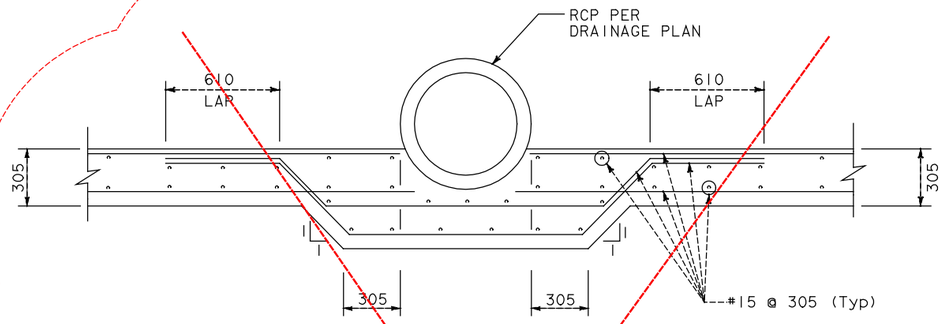

EXPOSED PIPE ON BASIN INVERT LINING DETAIL

NO SCALE

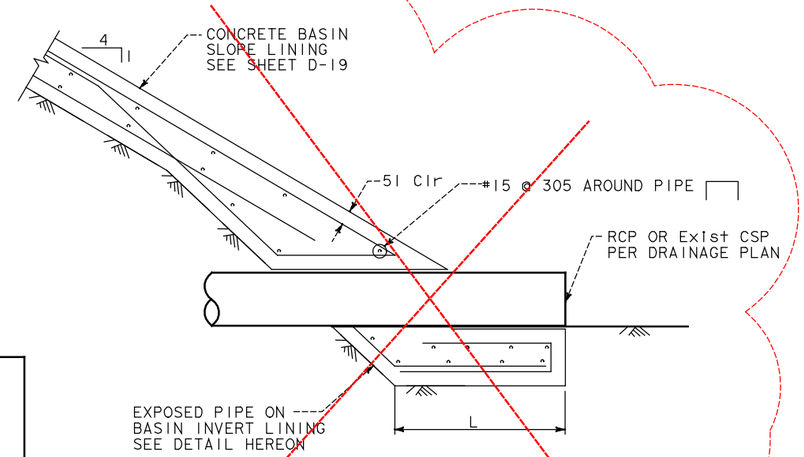

PIPE PENETRATION OF CONCRETE LINED BASIN

NO SCALE

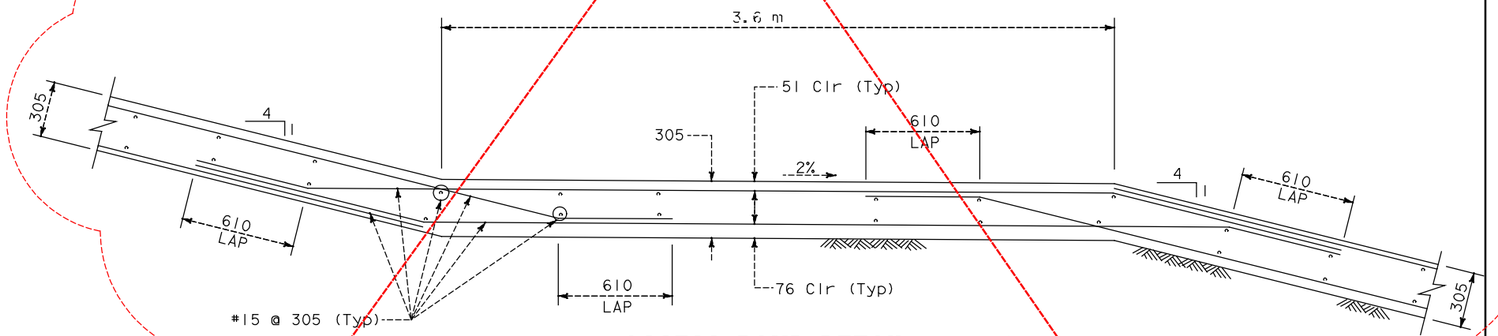

ACCESS RAMP DETAIL

NO SCALE

ELIMINATED PER CCO 2

AS-CONSTRUCTED PLANS

The Caltrans AS-BUILT PLANS were compared to the Field Memorandums issued by RBF to the Resident Engineer.

The changes reflected in these AS-CONSTRUCTED PLANS were obtained by conducting a review of the site by RBF field surveyors in June of 2000. The field survey was limited to the discrepancies between the Caltrans AS-BUILT PLANS and RBF Field Memorandums and review of the accessible invert elevations of drainage structures.

RBF is not responsible for the accuracy or completeness of electronic copies of this plan sheet.

Date of AS-CONSTRUCTED PLANS preparation. June 2000

AS-BUILT PLANS
CONTRACT NO. 11-233504
DATE COMPLETED 6-30-99
RE: D. JUAREZ

DRAINAGE DETAILS

NO SCALE

D-20

ALL DIMENSIONS ARE IN MILLIMETERS UNLESS OTHERWISE SHOWN

CALCULATED/ DESIGNED BY	CHECKED BY	DATE	REVISED BY	DATE REVISED
MC	SMT	4/98	4/98	

DESIGN OVERSIGHT
CHRISTIAN HERENCIA

STATE OF CALIFORNIA - DEPARTMENT OF TRANSPORTATION
NPDES

Caltrans

$DATE $TIME $FILE

FOR REDUCED PLANS ORIGINAL SCALE IN MILLIMETERS 0 20 40 60 80

USERNAME => $USER
DGN FILE => $REQUEST

CU 11332

EA 233501

DATE PLOTTED => $DATE
TIME PLOTTED => $TIME

DIST	COUNTY	ROUTE	KILOMETER POST TOTAL PROJECT	SHEET NO.	TOTAL SHEETS
11	SD	5,15	Var	27	41

REGISTERED CIVIL ENGINEER

A. M. WALKER No. 57716 Exp. 12-31-01 CIVIL STATE OF CALIFORNIA

5-25-98
PLANS APPROVAL DATE

ROBERT BEIN, WILLIAM FROST & ASSOCIATES
14725 ALTON PARKWAY
IRVINE, CA 92618

The State of California or its officers or agents shall not be responsible for the accuracy or completeness of electronic copies of this plan sheet.

AS-BUILT PLANS
CONTRACT NO. 11-233504
DATE COMPLETED 6-30-99
RE: D. JUAREZ

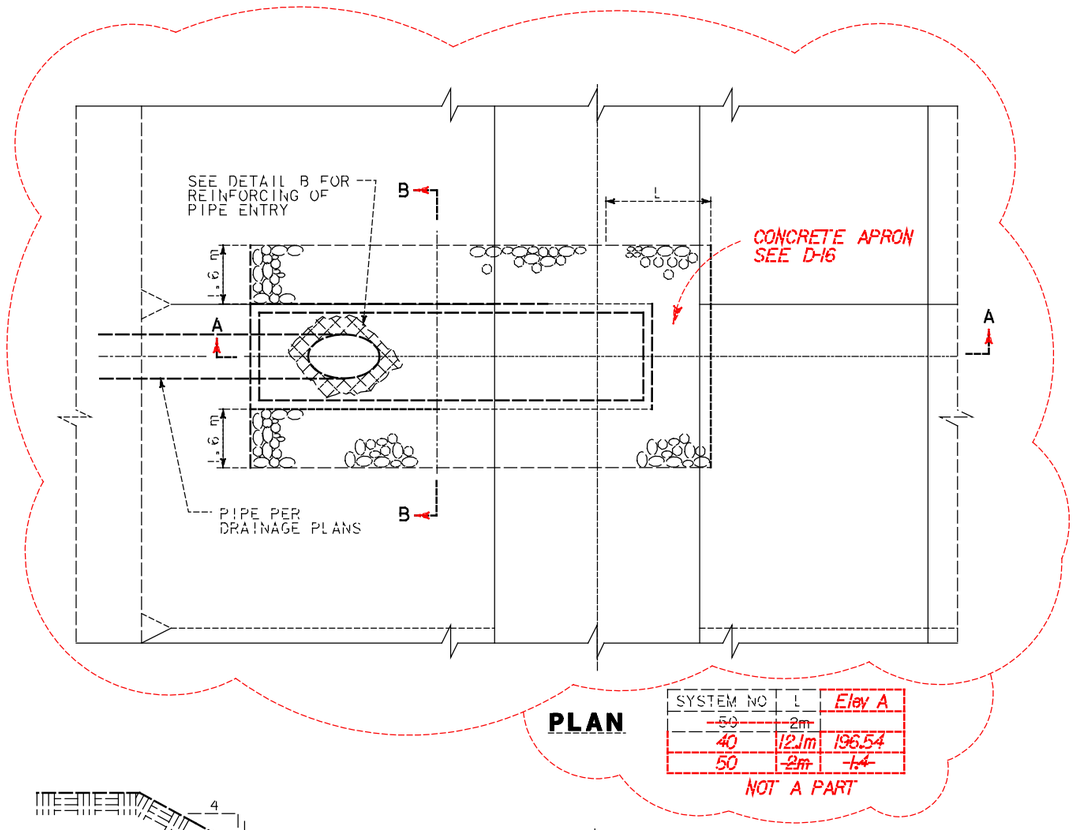

PLAN

SYSTEM NO	L	Elev A
~~50~~	2m	
40	12.1m	196.54
50	~~2m~~	~~1.4~~

NOT A PART

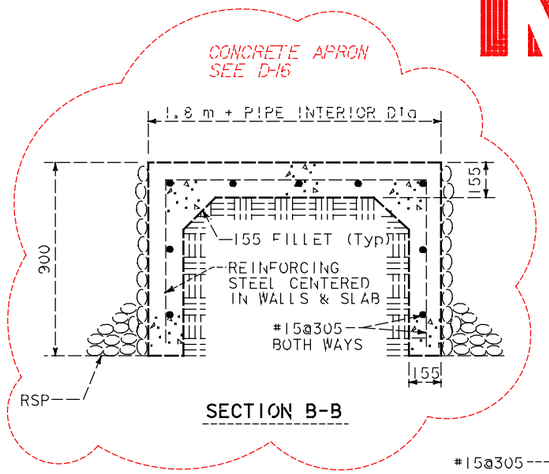

SECTION B-B

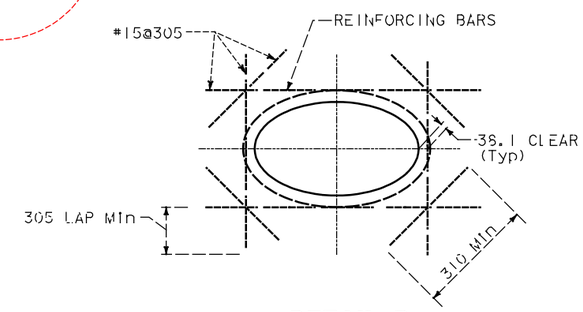

DETAIL B

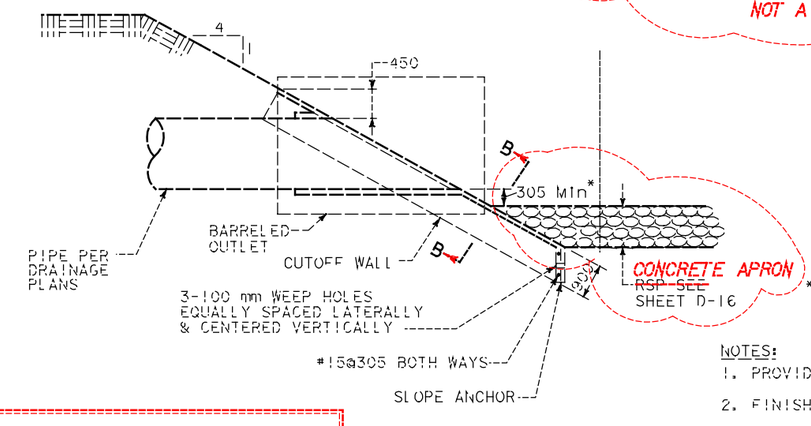

* 305 ABOVE THE HIGHER OF EXISTING OR DESIGN GRADE LINE

SECTION A-A

NOTES:
1. PROVIDE 38.1 mm Min CONCRETE COVER OVER REINFORCING.
2. FINISH EXPOSED SURFACE OF PCC WITH WOOD FLOAT.
3. LATERALS OF 600 mm OR LESS MAY BE BEVELED PIPE, 675 mm OR LARGER SHALL BE BARRELED OR DESIGNED STRUCTURE.

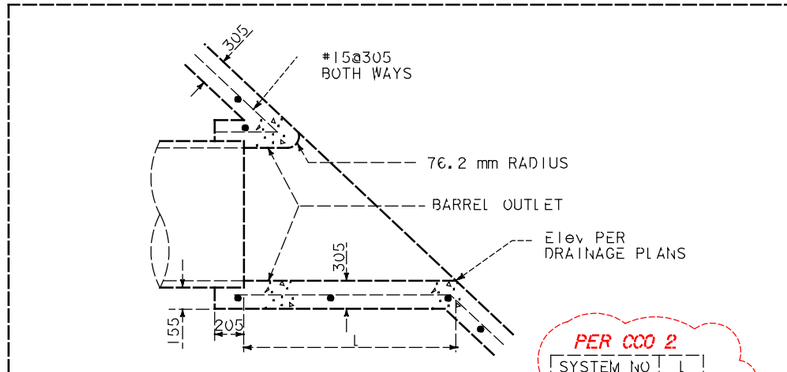

BARRELED OUTLET

PER CCO 2

SYSTEM NO	L
40	~~2.4m~~ 4.6m
~~50~~	~~2.4m~~

NOT A PART

PIPE ENTRANCE TO EARTH BASIN

~~50a~~

AS-CONSTRUCTED PLANS

The Caltrans AS-BUILT PLANS were compared to the Field Memorandums issued by RBF to the Resident Engineer.

The changes reflected in these AS-CONSTRUCTED PLANS were obtained by conducting a review of the site by RBF field surveyors in June of 2000. The field survey was limited to the discrepancies between the Caltrans AS-BUILT PLANS and RBF Field Memorandums and review of the accessible invert elevations of drainage structures.

RBF is not responsible for the accuracy or completeness of electronic copies of this plan sheet.

Date of AS-CONSTRUCTED PLANS preparation: June 2000

DRAINAGE DETAILS

D-21

NO SCALE

ALL DIMENSIONS ARE IN MILLIMETERS UNLESS OTHERWISE SHOWN

FOR REDUCED PLANS ORIGINAL SCALE IN MILLIMETERS 0 20 40 60 80

USERNAME => $USER
DGN FILE => $REQUEST

CU 11332 EA 233501

DATE PLOTTED => $DATE
TIME PLOTTED => $TIME

DESIGN OVERSIGHT
CHRISTIAN HERENCIA

STATE OF CALIFORNIA - DEPARTMENT OF TRANSPORTATION
NPDES

	CALCULATED/ DESIGNED BY	CHECKED BY
DATE	ANW 4/98	SMT 4/98
REVISED BY		
DATE REVISED		

$FILE$
$TIME$
$DATE$

DIST	COUNTY	ROUTE	KILOMETER POST TOTAL PROJECT	SHEET NO.	TOTAL SHEETS
11	SD	5,15	Var	28	41

REGISTERED CIVIL ENGINEER DATE

5-25-98
PLANS APPROVAL DATE

REGISTERED PROFESSIONAL ENGINEER A.M. WALKER No. 57716 Exp. 12-31-01 CIVIL STATE OF CALIFORNIA

ROBERT BEIN, WILLIAM FROST & ASSOCIATES
14725 ALTON PARKWAY
IRVINE, CA 92618

The State of California or its officers or agents shall not be responsible for the accuracy or completeness of electronic copies of this plan sheet.

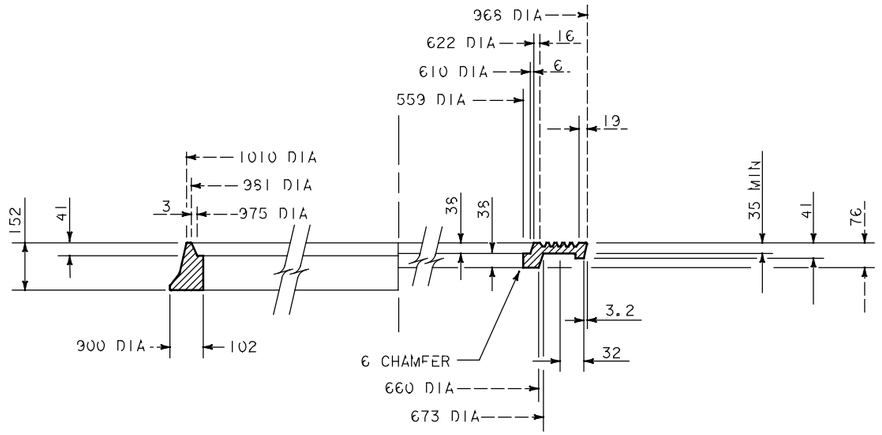

HALF SECTION FRAME AND COVER *

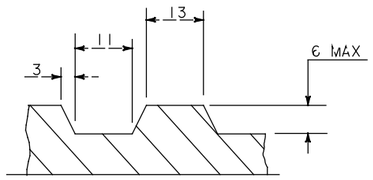

DETAIL A

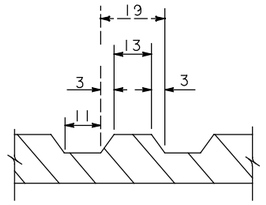

DETAIL B

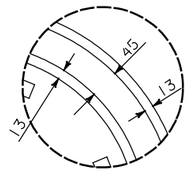

DETAIL C

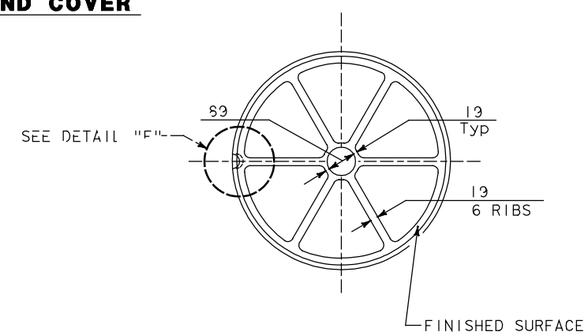

DETAIL E

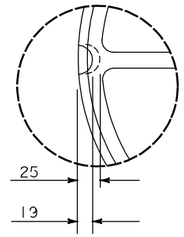

DETAIL F

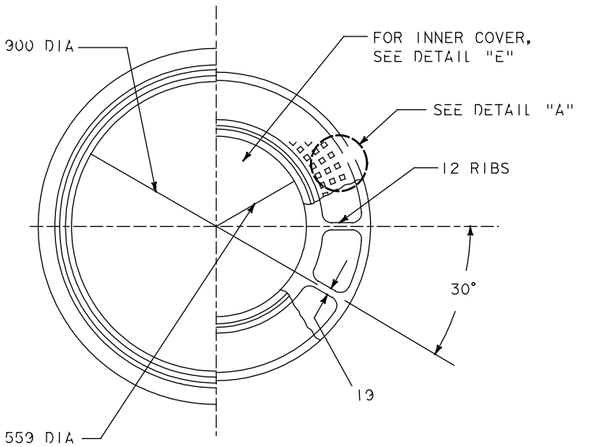

HALF PLAN FRAME AND COVER *

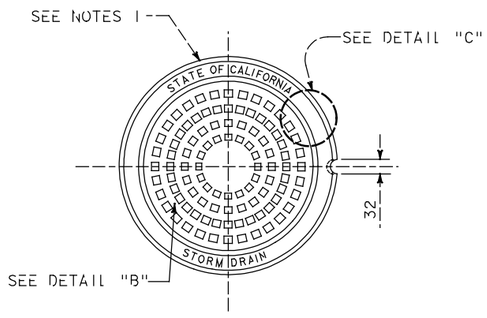

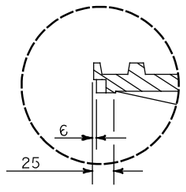

DETAIL D

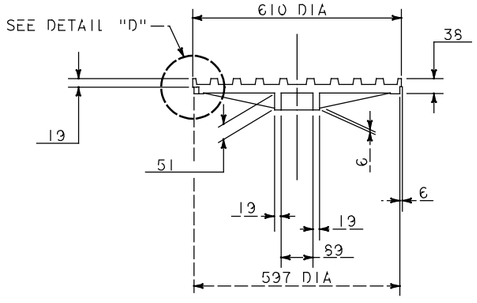

900MM MANHOLE FRAME AND TWO CONCENTRIC COVERS *

NOTE:

1. COVER SHALL BE MARKED "STATE OF CALIFORNIA" AND "STORM DRAIN" FOR FRAME AND COVER.

* STAINLESS STEEL AT WATER QUALITY MONITOR MH LOCATIONS SEE SHEET D-15

AS-CONSTRUCTED PLANS

The Caltrans AS-BUILT PLANS were compared to the Field Memorandums issued by RBF to the Resident Engineer.

The changes reflected in these AS-CONSTRUCTED PLANS were obtained by conducting a review of the site by RBF field surveyors in June of 2000. The field survey was limited to the discrepancies between the Caltrans AS-BUILT PLANS and RBF Field Memorandums and review of the accessible invert elevations of drainage structures.

RBF is not responsible for the accuracy or completeness of electronic copies of this plan sheet.

Date of AS-CONSTRUCTED PLANS preparation. June 2000

AS-BUILT PLANS
CONTRACT NO. 11-233504
DATE COMPLETED 6-30-99
RE: D. JUAREZ

DRAINAGE DETAILS

D-22

ALL DIMENSIONS ARE IN MILLIMETERS UNLESS OTHERWISE SHOWN

NO SCALE

STATE OF CALIFORNIA - DEPARTMENT OF TRANSPORTATION
Caltrans
NPDES
DESIGN OVERSIGHT
CHRISTIAN HERENCIA
CALCULATED/DESIGNED BY AMW DATE 4/98
CHECKED BY SMT 4/98
REVISED BY
DATE REVISED

$DATE$ $TIME$ $FILE$

FOR REDUCED PLANS ORIGINAL SCALE IN MILLIMETERS 0 20 40 60 80

USERNAME => $USER
DGN FILE => $REQUEST

CU 11332

EA 233501

LAST REVISION 05-09-98
DATE PLOTTED => $DATE
TIME PLOTTED => $TIME

DIST	COUNTY	ROUTE	KILOMETER POST TOTAL PROJECT	SHEET NO.	TOTAL SHEETS
11	SD	5, 15	Var	30	41

REGISTERED CIVIL ENGINEER — DATE

MIKE CHESNEY
No. 48913
EXP. 9-30-00
CIVIL
STATE OF CALIFORNIA
REGISTERED PROFESSIONAL ENGINEER

5-25-00
PLANS APPROVAL DATE

ROBERT BEIN, WILLIAM FROST & ASSOCIATES
14725 ALTON PARKWAY
IRVINE, CA 92618

The State of California or its officers or agents shall not be responsible for the accuracy or completeness of electronic copies of this plan sheet.

AS-CONSTRUCTED PLANS

The contractor has built the work shown on these AS-CONSTRUCTED plans using information furnished to him by the engineer.

The contractor certifies that these AS-CONSTRUCTED plans accurately represent the work performed by the contractor and his subcontractors and suppliers. It is understood that the State does not guarantee the accuracy of these AS-CONSTRUCTED plans and that the State shall not be responsible for any errors or omissions.

The State shall not be responsible for any loss or damage resulting from the use of these AS-CONSTRUCTED plans.

Date of contractor's certification for this sheet: 6-27-00

Date of engineer's approval for this sheet: 6-27-00

DATE REVISED | REVISED BY
4/98 | CRG
4/98 | MC

CALCULATED/ DESIGNED BY
CHECKED BY

DESIGN OVERSIGHT
CHRISTIAN HERENCIA

NPDES

STATE OF CALIFORNIA - DEPARTMENT OF TRANSPORTATION
Caltrans

3FILES
3TIMES
3DATES

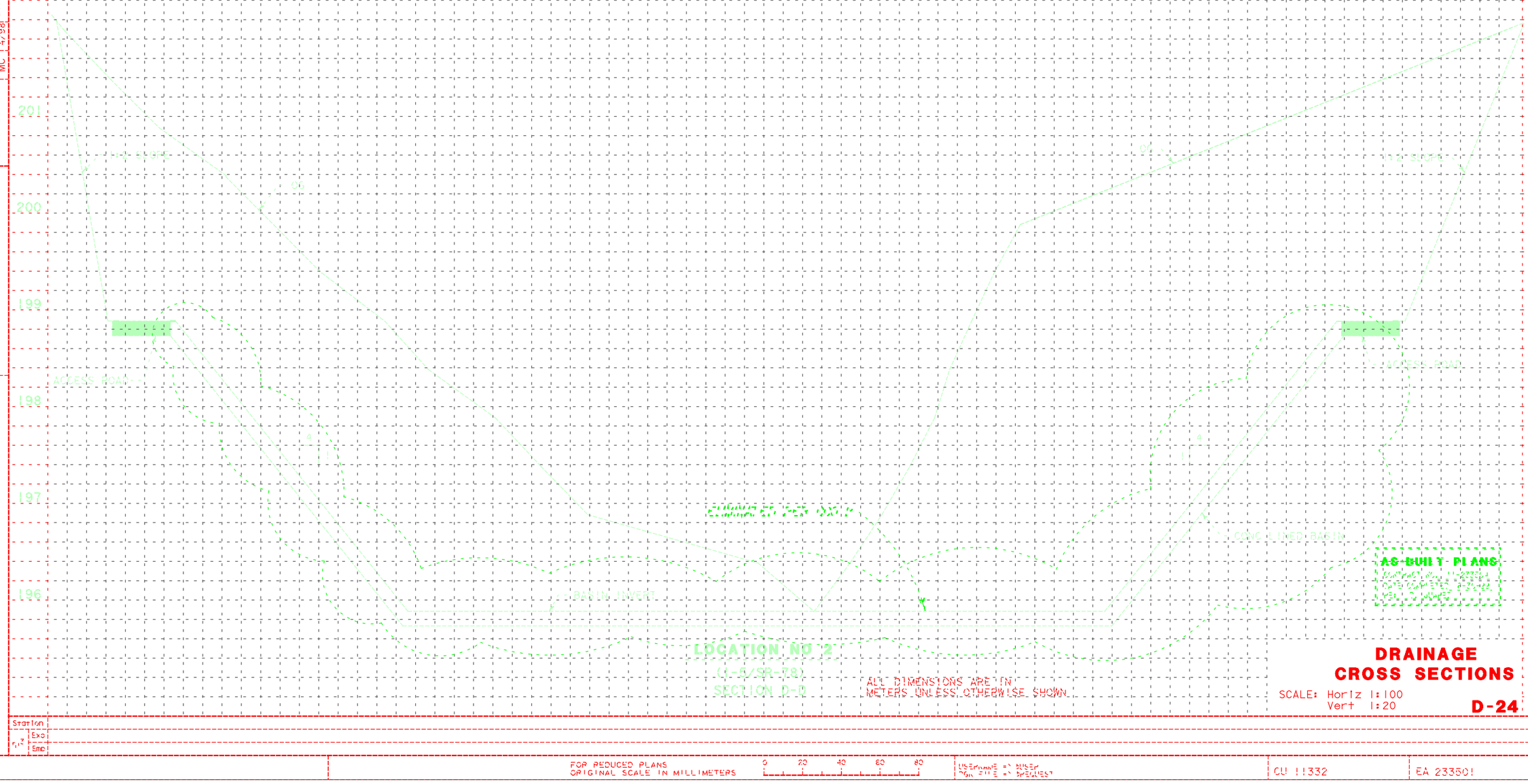

ALL DIMENSIONS ARE IN METERS UNLESS OTHERWISE SHOWN

DRAINAGE CROSS SECTIONS

SCALE: Horiz 1:100
Vert 1:20

D-24

Station	Exc	Emb
Tot		

FOR REDUCED PLANS ORIGINAL SCALE IN MILLIMETERS 0 20 40 60 80

USERNAME = BUSEY
DGN FILE = BUSEY

CU 11332

EA 23350!

LAST PLOTTED = DATE
LAST PLOTTED = TIME
DATE PLOTTED = DATE
TIME PLOTTED = TIME

DIST	COUNTY	ROUTE	KILOMETER POST TOTAL PROJECT	SHEET NO.	TOTAL SHEETS
11	SD	5,15	Var	33	41

REGISTERED CIVIL ENGINEER — DATE

A. M. WALKER — No. 57716 — Exp. 12-31-01 — CIVIL — REGISTERED PROFESSIONAL ENGINEER — STATE OF CALIFORNIA

5-25-98
PLANS APPROVAL DATE

ROBERT BEIN, WILLIAM FROST & ASSOCIATES
14725 ALTON PARKWAY
IRVINE, CA 92618

The State of California or its officers or agents shall not be responsible for the accuracy or completeness of electronic copies of this plan sheet.

AS-CONSTRUCTED PLANS

The Caltrans AS-BUILT PLANS were compared to the Field Memorandums issued by RBF to the Resident Engineer.

The changes reflected in these AS-CONSTRUCTED PLANS were obtained by conducting a review of the site by RBF field surveyors in June of 2000. The field survey was limited to the discrepancies between the Caltrans AS-BUILT PLANS and RBF Field Memorandums and review of the accessible invert elevations of drainage structures.

RBF is not responsible for the accuracy or completeness of electronic copies of this plan sheet.

Date of AS-CONSTRUCTED PLANS preparation: June 2000

Caltrans Metric

QUANTITIES ELIMINATED PER CCO 3

ELIMINATED PER CCO 2

	DRAINAGE SYSTEM NO	DRAINAGE UNIT	REMOVE HEADWALL (EA)	REMOVE CULVERT (LF)	CONCRETE BACKFILL (CY)	CONCRETE (BASIN LINING) (CY)	MINOR CONCRETE (MINOR STRUCTURE) (CY)	MINOR CONCRETE (MISC CONSTRUCTION) (CY)	MISC IRON AND STEEL (KG)	STAINLESS STEEL WIRE FABRIC (SF)	FRAMES, GRATES AND COVERS (N): MH FRAME AND COVER (EA)	DEBRIS RACK CAGE (STAINLESS STEEL) (EA)	TYPE 600-12 (EA)	CHECKERED PL (STAINLESS STEEL) (LF)	MH FRAME & COVER (STAINLESS STEEL) (EA)	RSP: 1/4 TON, METHOD B (EA)	FACING, METHOD B (CY)	CONCRETE LIGHT, METHOD B (CY)	FABRIC (SF)	CONCRETE (CONCRETED RSP) (CY)	ABANDON CULVERT (LF)	TYPE V RCP: 450 mm (LF)	600 mm (LF)	750 mm (LF)	900 mm PRECAST CONCRETE PIPE RISER (LF)		ALUMINIZED CSP: 450 mm (LF)	900 mm INLET (EA)	1200 mm INLET (EA)	PIPE JOINT CLASSIFICATION	CANAL GATE (STAINLESS STEEL) (EA)		HEIGHT OF INLET "H" (FT)	MAX/MIN COVER (FT)	DESCRIPTION	LOCATION	DRAINAGE PLAN SHEET NO	DRAINAGE SYSTEM NO	DRAINAGE UNIT
40	a																																				BARRELED OUTLET w/RSP	N606716.0058/E1920173.9301	3 2	40	a
	b																							6.0					S							750 mm RCP				b
	c						3.2 2.5		475 300					1											0.90 1.87											WQM MH, Hb=1.2	N606725.6335/E1920179.7592			c
	d																							14.3					S					2.4 2.57	2.0 4.0	750 mm RCP				d
	e						3.2 2.08		475 300					1											3.50 3.45											MH	N606738.8614/E1920187.7679			e
	f																							24.6					S					3.6 4.96	1.5 4.7	750 mm RCP				f
	g						3.2 2.08		475 300					1											4.18 4.12										4.1 5.62		MH	N606760.7576/E1920174.1876			g
	h		1																																	REMOVE HEADWALL				h
	i			59																																REMOVE RCP				i
41	a						3.6		475		1															5.10								5.0		MH	N606663.5153/E1920140.7388	3 2	41	a
	b																							24.3					S					5.8	4.2	750 mm RCP				b
	c						2.7 2.5		475 300					1											2.3 5.15 3.45										5.15 4.53	4.2	MH	N606680.8773/E1920121.9593			c
	d																							4.1					S					4.5	3.1	750 mm RCP				d
	e						3.6		475					1											1.25										1.25		WQM MH, Hb=1.2	N606685.8524/E1920124.0268			e
	f						3.03	1.55	300																11.2 1.27					S					2.47 3.0	2.0	750 mm RCP				f
	g						11	0.14	215	1		1											0.6		2.2 1.05				1				1.05	1.2	Mod GMP INLET w/CANAL GATE	N606697.1553/E1920128.7202			g
	h																							28.4					S					4.8		450 mm RCP				h
	i						0.6	0.24 0.26	150			1													1.22										1.22	3.8	Mod GMP w/APRON	N606700.6625/E1920100.5589			i
42	a						2.5 3.2		475 300		1														29.1 28.9		3.96 3.20								3.20	4.4	MH	N606668.7204/E1920142.5824	3 2	42	a
	b																												S					4.2		450 mm RCP				b
	c						0.6 11	0.20 0.14 2.6	150 215 180			1													1.22		3.6 2.15								1.22 2.14 3.2		Mod GMP w/APRON MOD GMP INLET REMOVE RCP	N606661.9537/E1920171.5831 N606685.2239/E1920148.4275			c d e
	f		1																																	REMOVE HEADWALL				f
	g				736																																	Conc LINED BASIN				g
SHEET TOTAL			2	65.8	736	30.3 23.3	5.64 0.72		3840 4055	1	2	4		5		45		11				57.3	84.5	23.15			0.6		2.44	3.20		1						SHEET TOTAL				

(N) NOT A SEPARATE PAY ITEM - FOR INFORMATION ONLY
WQM - WATER QUALITY MONITOR
WTJ - WATER TIGHT JOINT

AS-BUILT PLANS
CONTRACT NO. 11-233504
DATE COMPLETED 6-30-99
RE: D. JUAREZ

DRAINAGE QUANTITIES

D-27

DESIGN OVERSIGHT — CHRISTIAN HERENCIA
STATE OF CALIFORNIA - DEPARTMENT OF TRANSPORTATION — NPDES

	CALCULATED/ DESIGNED BY	DATE	REVISED BY
	TJR	4/98	
	CHECKED BY	DATE	REVISED
	AMW	4/98	

&FILES &TIMES &DATES

FOR REDUCED PLANS ORIGINAL SCALE IN MILLIMETERS 0 20 40 60 80
USERNAME => &USER
DGN FILE => &REQUEST
CU 11332
EA 23350!
LAST REVISION => &DATE &TIME
DATE PLOTTED => &DATE
TIME PLOTTED => &TIME

DIST	COUNTY	ROUTE	KILOMETER POST TOTAL PROJECT	SHEET NO.	TOTAL SHEETS
11	SD	5,15	Var	36	41

REGISTERED CIVIL ENGINEER

5-25-98
PLANS APPROVAL DATE

REGISTERED PROFESSIONAL ENGINEER
HILBERT W. DICKSON
No. 19417
Exp. 9-30-01
CIVIL
STATE OF CALIFORNIA

ROBERT BEIN, WILLIAM FROST & ASSOCIATES
14725 ALTON PARKWAY
IRVINE, CA 92618

The State of California or its officers or agents shall not be responsible for the accuracy or completeness of electronic copies of this plan sheet.

AS-BUILT PLANS
CONTRACT NO. 11-233504
DATE COMPLETED 6-30-99
RE: D. JUAREZ

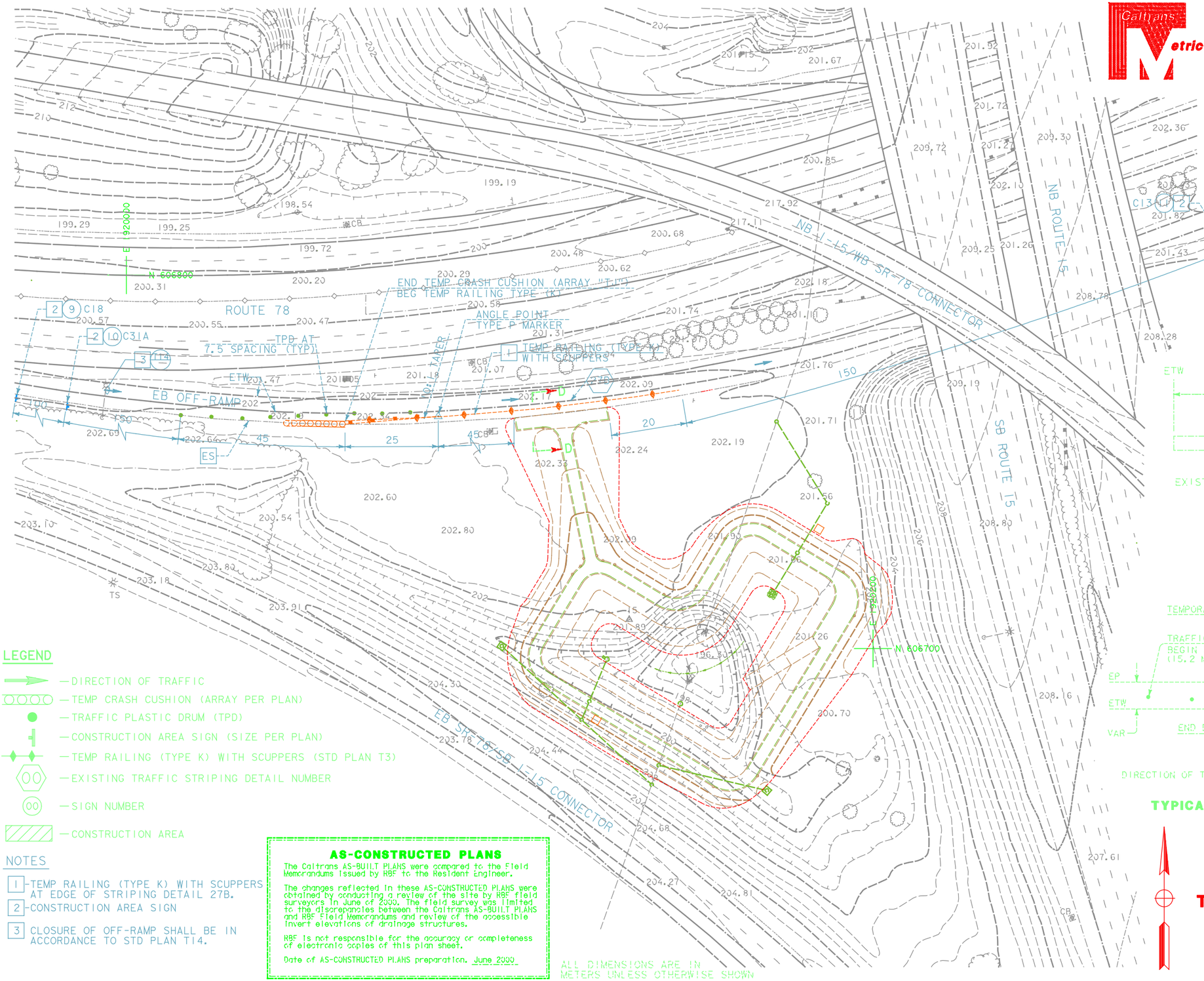

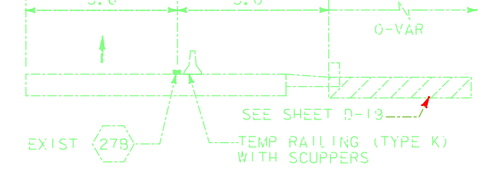

SECTION D-D
(NTS)

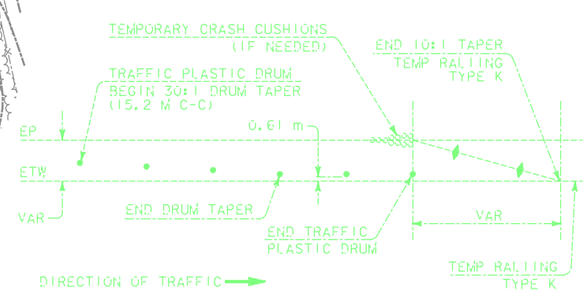

TYPICAL - PLACEMENT OF TRAFFIC PLASTIC DRUM

NO SCALE

LEGEND

- DIRECTION OF TRAFFIC
- TEMP CRASH CUSHION (ARRAY PER PLAN)
- TRAFFIC PLASTIC DRUM (TPD)
- CONSTRUCTION AREA SIGN (SIZE PER PLAN)
- TEMP RAILING (TYPE K) WITH SCUPPERS (STD PLAN T3)
- EXISTING TRAFFIC STRIPING DETAIL NUMBER
- SIGN NUMBER
- CONSTRUCTION AREA

NOTES

1. TEMP RAILING (TYPE K) WITH SCUPPERS AT EDGE OF STRIPING DETAIL 27B.
2. CONSTRUCTION AREA SIGN
3. CLOSURE OF OFF-RAMP SHALL BE IN ACCORDANCE TO STD PLAN T14.

AS-CONSTRUCTED PLANS

The Caltrans AS-BUILT PLANS were compared to the Field Memorandums issued by RBF to the Resident Engineer.

The changes reflected in these AS-CONSTRUCTED PLANS were obtained by conducting a review of the site by RBF field surveyors in June of 2000. The field survey was limited to the discrepancies between the Caltrans AS-BUILT PLANS and RBF Field Memorandums and review of the accessible invert elevations of drainage structures.

RBF is not responsible for the accuracy or completeness of electronic copies of this plan sheet.

Date of AS-CONSTRUCTED PLANS preparation: June 2000

ALL DIMENSIONS ARE IN METERS UNLESS OTHERWISE SHOWN

TRAFFIC HANDLING PLAN
(LOCATION 2)
I-15/SR-78 ES CONNECTOR
TH-2

SCALE: 1:500

DESIGN OVERSIGHT
CHRISTIAN HERENCIA

STATE OF CALIFORNIA - DEPARTMENT OF TRANSPORTATION
NPDES

DATE	REVISED BY	DATE REVISED
4/98	HWD	4/98

CALCULATED/DESIGNED BY
CHECKED BY

FOR REDUCED PLANS ORIGINAL SCALE IN MILLIMETERS 0 20 40 60 80

USERNAME => $USER
DGN FILE => $REQUEST

CU 11332

EA 23350!

DATE PLOTTED => $DATE
TIME PLOTTED => $TIME

$FILE$
$TIME$
$DATE$

DIST	COUNTY	ROUTE	KILOMETER POST TOTAL PROJECT	SHEET NO.	TOTAL SHEETS
11	SD	5,15	Var	40	41

REGISTERED CIVIL ENGINEER DATE

MIKE CHESNEY No. 48913 Exp. 9-30-00 CIVIL STATE OF CALIFORNIA REGISTERED PROFESSIONAL ENGINEER

5-25-98
PLANS APPROVAL DATE

ROBERT BEIN, WILLIAM FROST & ASSOCIATES
14725 ALTON PARKWAY
IRVINE, CA 92618

The State of California or its officers or agents shall not be responsible for the accuracy or completeness of electronic copies of this plan sheet.

TRAFFIC HANDLING

SHEET No	Temp RAILING (TYPE K) WITH SCUPPERS M	TRAFFIC PLASTIC DRUM Ea	TEMPORARY CRASH CUSHION MODULES ARRAY TJ Ea	
TH-1				
TH-2	116 ~~+15~~	10	~~8~~ 12	
TH-3	57			
TH-4	323			
TH-5	29 ~~+6~~	8	~~8~~ 12	
TOTAL	525 ~~511~~	18	~~16~~ 24	

CONSTRUCTION AREA SIGNS & QUANTITIES

SHEET No	SIGN No ◯	CODE	PANEL SIZE (mm)	No OF WOOD POSTS PER SIGN 89x140	REMARKS
TH-2	9	C18	900x900	1	
TH-2	10	C31A	900x900	1	
TH-2	11	C13	1200x450	1	
TH-3	12	C13	1200x450	1	
TH-5	13	C31A	900x900	1	
TH-5	14	C18	1200x1200	1	

ROADWAY ITEMS

LOCATION	DESCRIPTION	ASPHALT CONC (TYPE A) TONNE	AGGREGATE BASE (CLASS 2) m^3	PLACE AC DIKE (TYPE A) m	RECONSTRUCT CHAIN LINK FENCE m	ROADWAY EXCAVATION m^3	IMPORT BORROW m^3	
1	I-5/SR-56	94.13 ~~49~~	103.66 ~~77~~	120 ~~125~~	71.3 ~~55~~	845 ~~1377~~	950	PER CCO 7
2	I-15/SR-78	185.22 ~~79~~	164.4 ~~125~~			~~11846~~		ELIMINATED VIA CCO 3
3	I-5/LA COSTA	138.15 ~~38~~	59.06 ~~61~~			1137 ~~1733~~		
	TOTAL	417.5 ~~166~~	327.12 ~~263~~	120 ~~125~~	71.3 ~~55~~	~~14956~~	950	PER CCO 7

AS-CONSTRUCTED PLANS

The Caltrans AS-BUILT PLANS were compared to the Field Memorandums issued by RBF to the Resident Engineer.

The changes reflected in these AS-CONSTRUCTED PLANS were obtained by conducting a review of the site by RBF field surveyors in June of 2000. The field survey was limited to the discrepancies between the Caltrans AS-BUILT PLANS and RBF Field Memorandums and review of the accessible invert elevations of drainage structures.

RBF is not responsible for the accuracy or completeness of electronic copies of this plan sheet.

Date of AS-CONSTRUCTED PLANS preparation: June 2000

AS-BUILT PLANS

CONTRACT NO. 11-223504
DATE COMPLETED 6-30-99
RE: D. JUAREZ

SUMMARY OF QUANTITIES

Q-1

ALL DIMENSIONS ARE IN METERS UNLESS OTHERWISE SHOWN

FOR REDUCED PLANS ORIGINAL SCALE IN MILLIMETERS 0 20 40 60 80

USERNAME => &USER
DGN FILE => &REQUEST

CU 11332 EA 23350!

LAST REVISION
05-09-98 DATE PLOTTED => &DATE
TIME PLOTTED => &TIME

DESIGN OVERSIGHT CHRISTIAN HERENCIA

STATE OF CALIFORNIA - DEPARTMENT OF TRANSPORTATION

NPDES

Caltrans

&FILES
&TIMES
&DATES

CALCULATED/DESIGNED BY MC DATE 4/98 REVISED BY
CHECKED BY MC 4/98 DATE REVISED