SEPTEMBER 1999

BMP Retrofit Pilot Program

OPERATION MAINTENANCE AND MONITORING PLAN DISTRICT 7

VOLUME II –APPENDICES BMP STORMWATER MONITORING FIELD GUIDANCE

Caltrans Document I.D. CTSW-RT-99-052

Prepared For:

California Department of Transportation
CALTRANS ENVIRONMENTAL PROGRAM
1120 N. St., MS 27
Sacramento, CA 95814
P.O. Box 942874, MS 27
Sacramento, CA 94274-0001

LIST OF APPENDICES

APPENDIX 1a	Extended Detention Basins
APPENDIX 1b	Infiltration Basins
APPENDIX 1c	Sand Filters
APPENDIX 1d	Biofiltration Strips/Infiltration Trenches
APPENDIX 1e	Biofiltration Swales and Strips
APPENDIX 1f	Oil/Water Separators
APPENDIX 1g	Multi-Chambered Treatment Trains
APPENDIX 1h	Continuous Deflective Separation Units
APPENDIX 1i	Drain Inlet Inserts

CALTRANS
BMP RETROFIT PILOT PROGRAM

DISTRICT 7, LOS ANGELES

BMP OPERATION, MAINTENANCE, AND MONITORING PLAN

VOLUME II

APPENDIX I-A

EXTENDED DETENTION BASINS

September 1999

TABLE OF CONTENTS

Section **Page A-**

1.0 INTRODUCTION 1

1.1 Retrofit BMP Description 1
1.2 Evaluating BMP Performance 1
1.3 Deployment Criteria 5
1.4 Data Collection and Compilation 6
1.4.1 Data Requirements 6
1.4.2 Data Management 6
1.4.3 Data Analysis 7
1.5 Encroachment Permit and Restrictions 8

2.0 OPERATION AND MAINTENANCE 9

2.1 Operation and Maintenance Needs 9
2.2 Inspection Frequency 9
2.3 Aesthetic and Functional Maintenance 9
2.3.1 Aesthetic Maintenance 9
2.3.2 Functional Maintenance 10
2.4 Maintenance Frequency 11
2.5 Equipment, Resources, and Tools Needed 12
2.6 Debris and Sediment Disposal 13
2.7 Hazardous Wastes 14
2.8 Checklist for Inspectors and Operation and Maintenance Personnel 14

3.0 VECTOR CONTROL AND MANAGEMENT 15

4.0 VEGETATION MANAGEMENT 17

4.1 Management for Optimal BMP Performance 17
4.2 Management for Optimal Vector Control 17
4.3 Maintenance Requirements 17
4.4 Checklists 18

5.0 SAMPLING AND MONITORING 19

5.1 Equipment Installation 19
5.1.1 Water Quality Samplers 20
5.1.2 Cleaning Procedures for Composite Bottles 20
5.1.3 Cleaning Procedures for Teflon® Hose and Other Sampling Equipment 21
5.1.4 Flow Monitoring 21
5.1.5 Rain Gauge 22
5.1.6 Power 22

TABLE OF CONTENTS (Continued)

5.1.7 Telecommunications 22
5.1.8 Equipment Enclosures 22
5.2 Maintenance and Calibration 22
5.3 Preparation and Logistics 23
5.3.1 Weather Tracking 23
5.3.2 Mobilization and Staffing 23
5.3.3 Monitoring Station Preparation 24
5.4 Storm Monitoring 28
5.4.1 Storm Procedure 28
5.4.2 Sample Bottle Replacement 29
5.4.3 Storm Monitoring Office 29
5.4.4 Post Sampling Procedures 29
5.4.5 Evaluation 30
5.4.6 Grab Sampling 30
5.5 Sample Tracking and Handling 32
5.6 Laboratory Selection, Sample Container Preparation, and Analytical Methods 35
5.6.1 Laboratory Selection 35
5.6.2 Holding Times, Sample Bottles, and Preparation 35
5.6.3 Project Reporting Limits 36
5.6.4 Laboratory Data Package Deliverables 36
Organic 37
5.7 Sediment Sampling 38
5.7.1 Sediment Collection 38
5.7.2 Sediment Analyses 39
5.8 Empirical Observations 41
5.8.1 Purpose of Empirical Observations 41
5.8.2 Guidelines 41
5.8.3 Checklist for Sampling and Monitoring Personnel 42

6.0 REFERENCES 43

TABLES

2.1 Waste Disposal Services in Southern California
5.1 Storm Water Matrix Analytical Parameters, Methodologies, Reporting Limits, Holding Times, Container Volumes and Types, and Preservation
5.2 Sediment Matrix Analytical Parameters, Methodologies, Reporting Limits, Holding Times, Container Volumes and Types, and Preservation

1.0 INTRODUCTION

The Caltrans Best Management Practice (BMP) Retrofit Pilot Program is a comprehensive water quality monitoring study to evaluate the removal of contaminants in stormwater runoff from Caltrans roads and facilities through a series of BMP pilot installations. The overall objectives of this portion of the program are to document BMP contaminant removal efficiency and technical feasibility.

This appendix of the Operations, Maintenance, and Monitoring Plan (OMM) applies to Extended Detention Basins (EDB). Refer to the consultant's monitoring equipment manuals and stormwater monitoring Standard Operating Procedures (SOPs) for details related to equipment installation, equipment maintenance, and storm monitoring. Maintenance, safety, documentation, and storm monitoring tasks will be carried out according to the procedures detailed in this plan. Additional measures may be necessary due to unforeseen or temporary changes to the work environment at these sites.

1.1 Retrofit BMP Description

An EDB is a depression or enclosed area used to detain stormwater for 48- to 72-hour periods so that constituents are removed by particulate settling. Properly maintained EDBs are allowed to become dry between storms.

Runoff fills an EDB until it reaches an outlet riser connected to a discharge conveyance. The riser and conveyance is designed to handle flows that are generated from less than 25-year storm events. Discharge from greater than 25-year storm events will spill into a second outlet riser. The EDBs have been designed to optimally treat total runoff from storm events that are less than a 1-year average storm. Figure 1.1 shows the schematic cross-section for the EDBs.

1.2 Evaluating BMP Performance

To effectively evaluate the performance of an EDB pilot facility, the following objectives will be met:

- Determine the quantity of runoff treated by the BMP.
- Determine the reduction (or change) in analyte concentrations between the influent and the effluent from the BMP.
- Determine and document the level of effort required to maintain the BMP at optimal effectiveness (i.e., treatment of stormwater runoff for storm events producing up to the 1-year, 24-hour peak flow).
- Determine and document the level of effort required to control vectors of human disease and nuisance insects, rodents, and vegetation at the BMP.
- Determine and document BMP performance evaluation criteria relative to the qualitative benefits of the BMP.

Figure 1.1
Typical Schematic of a Extended Detention Basin

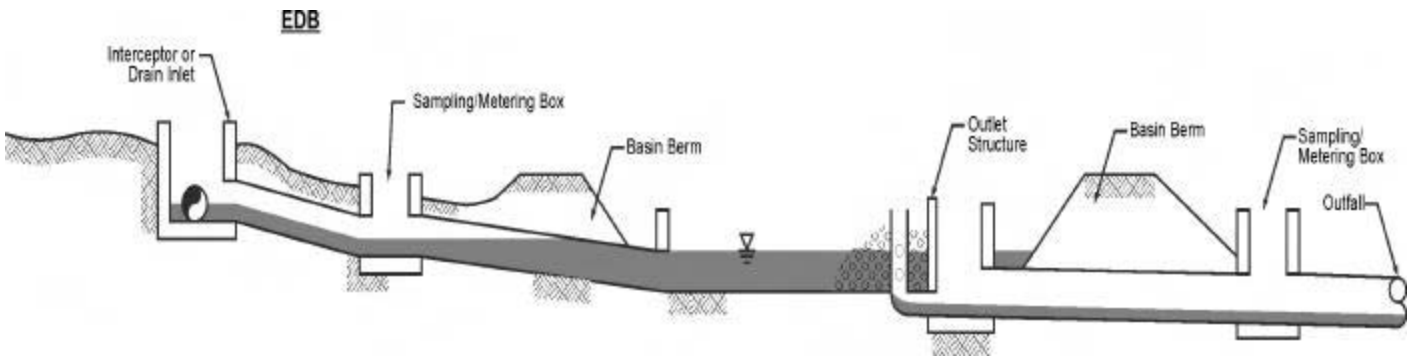

To effectively estimate the removal of contaminants from an EDB, the quantity and quality of runoff entering the EDB will be compared to the quantity and quality of water discharged from the EDB. These data will allow a direct estimate of the total reduction in mass loadings for a variety of contaminants.

The effectiveness of an EDB is also related to the implementation of strict maintenance procedures and the documentation of empirical observations. Items such as erosion and bank stability, maintenance of storage volumes, discharge rates, trash build-up, and infiltration capability may directly effect the performance of this EDB.

1.3 Deployment Criteria

Stormwater samples will be collected from the EDB for up to ten storm events over a two wet seasons, weather permitting. Storms targeted for sampling will be separated by a minimum of 48 hours (72 hours preferably). This facility will be inspected per the guidelines given in Section 4.0 of the *Field Guidance Notebook* (*FGN*), which include a mandatory inspection after every storm greater than 0.50 inch.

Based on the rainfall requirements needed to generate monitorable flows in and out of the pilots, Caltrans has developed a refined monitoring team deployment criteria. The refined deployment criteria defines when to chase storms based on season, storm forecasts, and the current count of successfully monitored storms.

The deployment season, in which monitoring teams remain "on-call" and fully staffed, will be restricted to the portion of the year when rainfall is most probable and better predictable. Summer showers are not seen as predictable events, and dry watersheds and BMPs will retain more water which results in less effluent.

The deployment season will start on October 1. The season shall end after 3 weeks of dry weather where less than 0.2 in. of rainfall occurs in the San Diego or LA areas, but end no sooner than April 1 and not later than May 30. This approach will provide a plan that adjusts to wet or dry springs.

The following criteria will decrease false starts, while allowing teams to continue to chase storms based on promising storm forecasts. The criteria will be used for pilots, regardless of drainage area size or land use.

“Forecast-Unlikely” set to less than 0.25 in. rain and less than 50% probability, (Decision = "No Go")

“Forecast-Marginal” set to 0.25 in. or greater and 50 –75% probability, (Caltrans Decision)

“Forecast-Highly Probable” set to 0.25 in. or greater and greater than 75% probability. (Decision = "Go")

Forecast information will be gathered as indicated in the OMM manuals (e.g., internet sources). As always, if conditions happen to allow paired samples to be successfully taken for any storm larger than 0.1", that sampling would be considered as a successful event, which would count towards fulfilling Scoping Study requirements.

When a specific pilot is successfully monitored for the total required storms per the applicable Scoping Study, the decision to further deploy to monitor that pilot will fall to Caltrans and no commitment to monitor beyond the terms of the Scoping Studies can be made at this time.

1.4 Data Collection and Compilation

1.4.1 Data Requirements

The following data will be collected to assess the performance and maintenance aspects of an EDB:

- Water quality and quantity data of runoff into and discharge from the detention basin from flow-composite samples and grab (as soon as possible after the start of runoff) samples for at least 10 storm events during two wet seasons, weather permitting.
- Rainfall data recorded as a function of time, from all rainfall events during the study period.
- Observations of water quality, weather, antecedent conditions, spills, etc.
- Documentation records of inspections and maintenance activities performed.
- Vector monitoring and abatement data.
- Records of vector control measures taken.
- Vegetation management records.
- Continuous water basin level data

1.4.2 Data Management

The consultants will be responsible for data management. Overall management of the data will be consistent with established Caltrans procedures for stormwater monitoring projects.

The consultant's Sample Control group will be responsible for tracking the analytical process to assure that laboratories are meeting the required turnaround times and are providing a complete deliverable package. Sample Control will also be responsible for accumulating copies of site visit logs, inspection logs, facility maintenance records, vector control sampling data, and logged rainfall and hydrographic data. Sample Control will receive the original hard and electronic copies from the laboratory, system managers, and field crews, and verify completeness and log dates of receipt. A copy of the data sets and log sheets will be filed in Sample Control's central filing system and another copy

will be provided to the Database Manager. The originals will then be transferred to the Task Order Manager and filed with other project documentation to maintain complete project records.

Laboratories, system managers, and vector control crews will be requested to provide data in both hard copy and electronic formats. The forms of electronic submittals will be provided to the laboratories to ensure that the files can be imported into the project database with a minimum of editing. A relational database will be used for data. Laboratory data will be maintained and managed using Microsoft Excel® and Microsoft Access®. Files from the influent and effluent monitoring stations will be stored in the same database system and be linked to the laboratory database. The sampling system files will include rainfall, sampling, and flow data. Site characteristics will be stored in a separate file and linked to both the chemical and sampling system files to enable useful data queries.

Data will be submitted to Caltrans based on "Caltrans Statewide Data Management Plan—Data Reported Protocol and Database," a technical memorandum dated 23 April 1998 from Larry Walker Associates to task order managers.

1.4.3 Data Analysis

Differences in storm characteristics, which can lead to differences in analyte loadings of monitored storm events, will be evaluated for each year of monitoring. Specific storm parameters such as total rainfall, average intensity, peak intensity, and antecedent conditions will be measured to determine if these parameters correlate with analyte concentrations and loads in stormwater discharges.

Contingent on the amount and quality of actual data collected, first year influent and effluent sampling results will be characterized by descriptive statistics and statistical comparisons between the influent and effluent. Event mean concentrations (EMCs) will be measured for each water quality parameter at both locations. Annual statistics based upon assumed log-normal distributions also will be calculated for each water quality parameter.

Differences in mean concentrations of analytes between storm events and locations will be considered to be statistically significant at $P \leq 0.10$. Although the acceptable level of alpha error is typically set at $P \leq 0.05$, this decision level was increased due to the relatively high coefficients of variation (CV) encountered with stormwater data.

Care will be taken to guard against false positive or negatives, so that widely varying storm event characteristics will not result in misinterpretation of the stormwater runoff data.

Widely varying storm event characteristics will be considered when evaluating BMP efficiencies based on stormwater runoff data. Empirical observations, maintenance activities, and vector control activities will be compiled and compared to water quality and quantity data.

1.5 Encroachment Permit and Restrictions

Visitation to an EDB requires a Caltrans Encroachment Permit. Copies of the EDB permits are located in Tab 9 of the *FGN*. These permits list access and safety requirements along with any restrictions. The respective Caltrans District Encroachment Permit Office will be contacted for further information and direction (phone numbers can be found under Tab 2 in the *FGN* portion of the Volume II OMM Plan).

2.0 OPERATION AND MAINTENANCE

2.1 Operation and Maintenance Needs

The operational and maintenance needs of an EDB are:

- Dispersion of alluvial sediment deposition at inlet structures thus limiting the extended localized ponding of water.
- Periodic sediment removal in accordance with the 18" depth threshold or 10% of the storage volume (which ever is less) and the WMI Operation and Maintenance guide.
- Monitoring of the basin to ensure it is completely and properly drained.
- Outlet riser cleaning. Vegetation management to prevent marsh vegetation from taking hold, and to limit habitat for disease-carrying fauna.
- Removal of graffiti, grass trimmings, weeds, tree prunings, leaves, litter, and debris.
- Preventative maintenance on monitoring equipment.
- Vegetative stabilization of eroding banks and basal areas.

2.2 Inspection Frequency

The facility will be inspected and inspection visits will be completely documented (refer to Tab 4 of the *FGN*):

- Once a month at a minimum.
- After every large storm (after every storm monitored or those storms with more than 0.50 inch of precipitation).
- On a weekly basis during extended periods of wet weather.

2.3 Aesthetic and Functional Maintenance

Functional maintenance is important for performance and safety reasons. Aesthetic maintenance is important for public acceptance of stormwater facilities.

Both forms of maintenance will be combined into an overall Stormwater Management System Maintenance Program. Maintenance activities will be carried out by each EDB's respective consultant. Maintenance items are included in the checklist/log forms found in Tab 5 of the *FGN*. Maintenance activities will conform to the practices specified in this plan.

2.3.1 Aesthetic Maintenance

The following activities will be included in the aesthetic maintenance program:

- **Graffiti Removal.** Graffiti will be removed in a timely manner to improve the appearance of an EDB, and to discourage additional graffiti or other acts of vandalism.
- **Grass Trimming.** Trimming of grass will be done around fences, the basin, outlet structures, and sampling structures.
- **Weed Control.** Weeds will be removed through mechanical means.

2.3.2 Functional Maintenance

Functional maintenance has two components:

1. Preventive maintenance
2. Corrective maintenance

Preventive Maintenance

Preventive maintenance that will be done on a regular basis is detailed in the checklists contained in Tab 5 of the *FGN*. Preventive maintenance activities to be instituted at an EDB are:

- **Mowing.** Vegetation in the EDB will be kept at the average maximum height of 18 inches to prevent the establishment of marsh vegetation, the stagnation of water, and the development of faunal habitats.
- **Trash and Debris.** During each inspection and maintenance visit to the site, debris and trash removal will be conducted to reduce the potential for inlet and outlet structures and other components from becoming clogged and inoperable during storm events.
- **Sediment Management.** Alluvial deposits at the inlet structures may create zones of ponded water. Upon these occurrences these deposits will be graded within the EDB in an effort to maintain the functionality of the BMP. Sediment grading will be accomplished by manually raking the deposits.
- **Sediment Removal.** Surface sediments will be removed when sediment accumulation is greater than 18-inches or 10 percent of the basin volume, whichever is less. Vegetation removed with any surface sediment excavation activities will be replaced through reseeding. Disposal of sediments is discussed in Section 2.6 and will comply with applicable local, county, state, or federal requirements.
- **Mechanical Components.** Regularly scheduled maintenance will be performed on valves, fence gates, locks, and access hatches in accordance with the manufacturers' recommendations. Mechanical components will be operated during each maintenance inspection to assure continued performance.
- **Elimination of Mosquito Breeding Habitats.** The most effective mosquito control program is one that eliminates potential breeding habitats. Mosquito control measures are discussed more in Section 3.0.

Corrective Maintenance

Corrective maintenance is required on an emergency or non-routine basis to correct problems and to restore the intended operation and safe function of an EDB. Corrective maintenance activities include:

- **Removal of Debris and Sediment.** Sediment, debris, and trash, which threaten the ability of an EDB to store or convey water, will be removed immediately and properly disposed of (see Section 2.6 and 5.7).
- **Structural Repairs.** Repairs to any structural component of an EDB will be made promptly (e.g., within 10 working days). Designers and contractors will conduct repairs where structural damage has occurred.
- **Embankment and Slope Repairs.** Damage to the embankments and slopes will be repaired quickly (e.g., within 10 working days).
- **Elimination of Mosquito Breeding Areas.** Consult Appendix IV for controlling mosquitoes.
- **Erosion Repair.** Where a reseeding program has been ineffective, or where other factors have created erosive conditions (i.e., pedestrian traffic, concentrated flow, etc.), corrective steps will be taken to prevent loss of soil and any subsequent danger to the performance of an EDB. There are a number of corrective actions than can be taken. These include erosion control blankets, riprap, sodding, or reduced flow through the area. Design engineers will be consulted to address erosion problems if the solution is not evident.
- **Fence Repair.** Timely repair of fences (e.g., within 10 working days) will be done to maintain the security of the site.
- **Elimination of Trees and Woody Vegetation.** Woody vegetation will be removed from embankments. See Section 4.0 for further information on vegetation management.
- **Elimination of Animal Burrows.** Animal burrows will be filled and steps taken to remove the animals if burrowing problems continue to occur (filling and compacting). If the problem persists, vector control specialists will be consulted regarding removal steps. This consulting is necessary as the threat of rabies in some areas may necessitate the animals being destroyed rather than relocated.
- **General Facility Maintenance.** In addition to the above elements of corrective maintenance, general corrective maintenance will address the overall facility and its associated components. If corrective maintenance is being done to one component, other components will be inspected to see if maintenance is needed.

2.4 Maintenance Frequency

The maintenance indicator document, included as Appendix V, lists the schedule of maintenance activities to be implemented at a pilot EDB.

2.5 Equipment, Resources, and Tools Needed

The following resources and equipment are needed by inspection personnel:

- A Locke level or other surveying equipment.
- Industrial strength flashlight.
- Crowbar.
- Tape measure and other measuring device (e.g., survey rod) to determine surface sediment accumulation depths.
- Local erosion, sediment control, or stormwater management handbooks.
- Trash removal equipment.
- Sediment manipulation/removal equipment (e.g., shovels, rakes, 5-gallon buckets).
- Rain and foul weather gear and other personal protective equipment (PPE).
- This Appendix and *FGN*.
- Copies of necessary inspection reports and forms.
- Encroachment permit.
- Business cards or other identification.
- Camera to document field conditions.
- Orange vest and hardhat.
- Maintenance logs.
- Leather gloves.
- Safety glasses.
- Safety boots.
- Pen or pencil.

Except for the items contained on site, the maintenance contractors will supply equipment, tools, and resources required for maintenance activities at an EDB. At a minimum, these contractors will supply the following:

- Heavy earth moving equipment (loaders, backhoes, graders, draglines, and vacuum equipment).
- Dump trucks, equipment transports, and other hauling equipment.
- Shovels, picks, rakes, wheel barrels, and other hand tools.
- Pumps.
- Mechanics tools.
- Concrete tools.
- Vegetation maintenance equipment (hand and tractor lawn mowers, gas trimmers, seed and fertilizer spreaders, pesticide and herbicide sprayers, leaf blowers, chain saws, pruning sheers, hedge trimmers, and wood chippers).
- Painting equipment (brushes, rollers, and sprayers).
- Locke level or survey equipment, tape measures, and sediment probes.

- Other necessary safety equipment (gloves, boots, hard hats, reflective vests, safety glasses, traffic control lighting, and confined space entry equipment).

These items will be supplied to the maintenance contractors by the consultants responsible for the BMP:

- This Appendix, *FGN* and approved BMP facility plans.
- Encroachment Permit.
- Logbook containing Maintenance Logs.

The following items for maintenance and inspection activities will be supplied on site:

- Graduated PVC poles for gauging sediment depth will be installed at three locations within the basin.
- A staff gauge will be installed to determine basin depth and to calibrate monitoring equipment.
- Trash containers will be located on site.

2.6 Debris and Sediment Disposal

Caltrans is responsible for any hazardous waste generated at an EDB as the owner/generator. Consultants responsible for operating, maintaining, and monitoring the EDBs will be responsible for the removal, testing, and disposal of the hazardous waste by independent contractors. Disposal of sediment, debris, and trash will be contracted out in accordance with local, county, state, and federal waste control programs. Potential disposal service contractors are listed in Table 2.1.

Table 2.1
Waste Disposal Services in Southern California

Laidlaw/Rollins (OPC) 5765 Alba Street Los Angeles, CA 92011 Ph: (213) 585-5063 Fax: (213) 589 5443 EPA: CAD050806850	Laidlaw Environmental Services 5295 S. Garvey Rd. Westmoreland, CA 92281 Ph: (619) 334-9400 Fax: (619) 344-9405 EPA: CAD000633164
TSM Recovery and Recycling 3422 W. Pico Blvd. Los Angeles, CA 90019 Ph: (213) 735-9443 EPA: CAD108040858	Pacific Resource Recovery 3150 E. Pico Blvd. Los Angeles, CA 90023 Ph: (800) 499-7145 Fax: (213) 780-9940 EPA: CAD008252405
Demenno Kerdoon Environmental Services 3650 E. 26th Street Los Angeles, CA 90023 Ph: (213) 268-5056 Fax: (213) 268-9672 EPA: CAD080033681	U.S. Filter Recovery Services 5375 S. Boyle Ave. Vernon, CA 99058 Ph: (213) 277-1500 Fax: (213) 588-0094 EPA: CAD097030993

Prior to disposal, sediments will be characterized to determine the extent and type of chemical contamination. Evidence of oil and grease, antifreeze, solvents, fuel, hydrogen sulfide, and any other noxious substance will be noted. Observations will be used to determine if more than the standard analyte list of analytes is required. The standard analyte list (found in Table 5.2) is based on highway analytes that have a strong potential to exceed California Code of Regulations Title 22 hazardous waste criteria (State of California, 1985). Methods used to sample sediments are discussed in Subsection 5.7. While analytical results are pending, the removed sediments will be stockpiled on site at a minimum distance of 100 feet from the basin and property boundary. Hay bales or silt barriers will be placed around the perimeter of the pile, and piles will be covered with plastic and stabilized with sandbags. Separate piles will be used for sediments suspected to be contaminated.

2.7 Hazardous Wastes

Suspected hazardous wastes will be analyzed to determine disposal options. Hazardous materials generated on site will be handled and disposed of according to local, state, and federal regulations. A solid or liquid waste is considered a hazardous waste if it exceeds the criteria listed in the California Code of Federal Regulations, Title 22, Article 11 (State of California, 1985).

2.8 Checklist for Inspectors and Operation and Maintenance Personnel

Facility Inspection and Observational checklists or logs will be filled out during each visit to an EDB**.** These will be kept in a field logbook to ensure that the EDB is maintained at optimum levels throughout the monitoring period. The field logbook will also contain storm monitoring data sheets, and instrument calibration logs (Section 5.0). A separate logbook containing Facility Inspection Checklists and Maintenance Log Sheets will be kept. A separate logbook also will be kept for vector control and management logsheets (Appendix IV of Volume II).

Refer to Forms C through F (in Tabs 4 and 5 of the *FGN*) for checklists related to the inspection and maintenance requirements of an EDB.

3.0 VECTOR CONTROL AND MANAGEMENT

Vector monitoring and management will be performed in accordance with Appendix IV by sub-contracted County of San Diego Department of Environmental Health Vector Surveillance and Control.

4.0 VEGETATION MANAGEMENT

The three main reasons for having a vegetation management program for an EDB are:

1) Uncontrolled vegetation may affect the performance.
2) Maintaining vegetation is necessary to prevent the facility from becoming a public "eye sore."
2) Maintaining vegetation is key to controlling mosquito populations and other vector and nuisance organisms.

4.1 Management for Optimal BMP Performance

Maintenance and control of vegetation is essential to the optimal operation and performance of an EDB. The basin will be seeded with low-growing grasses. Detention basin vegetation will be maintained at an average maximum height of 12 inches.

The condition of the vegetation will be inspected on a monthly basis at a minimum. These inspections will insure that the vegetation within the basin floor is kept relatively short, that the vegetation protecting the slopes is kept healthy and continuous, and that undesirable plant species do not take root. Shorter vegetation on the basin floor will optimize the treatment capacity, the residence time of runoff, and will aid in vector control. Maintaining a healthy and continuous cover of vegetation on the slopes will minimize erosion. Preventing undesirable plant species from taking root will prevent plants with large root systems from damaging the embankments. See Section 2.0 for details on controlling vegetation.

4.2 Management for Optimal Vector Control

If vegetation (such as cattails, bulrush, willows, etc.) develops within an EDB, problems may occur with vector control. Controlling vegetation and standing water is preferred to enacting vector management programs.

If vegetation control is needed, cut vegetation must not be left in the detention basin. If this material is flooded, by-products of decomposition will be attractive to egg-laying female mosquitoes and will provide food resources for mosquito larvae. Mulching of cut vegetation into the pond basin is also not a viable alternative.

4.3 Maintenance Requirements

Mowing, trimming, and pruning are the preferred means for controlling vegetation at an EDB. Controlling standing water will also be essential to controlling vegetation. Burning will not be allowed, and the use of herbicides will not be allowed because they can de-

vegetate slopes and embankments for extended periods of time, and have detrimental effects to the quality of runoff treated at the facility.
When equipment is used to remove vegetation, care will be taken to prevent ruts, holes, and an uneven basin floor. Such depressions can cause standing water that will create problems of vector control.

Maintenance activities that will be conducted on landscaped vegetation include:

- Weeding.
- Pruning.
- Replacement of dead or dying plants.

Vegetation removed from an EDB facility will be promptly hauled off and disposed of properly. Cut vegetation will not be stockpiled on site, especially within the basin.

4.4 Checklists

During the routine vegetation inspections of an EDB, the Facility Inspection Checklist (Form C, Tab 4) will be completely filled out and signed by the inspector. This checklist incorporates necessary vegetation inspection requirements. A Maintenance Activity Checklist (Form E, Tab 5) will be filled out for maintenance activities performed.

5.0 SAMPLING AND MONITORING

This section details the monitoring equipment to be used at an EDB, sampling protocols, analytes to be tested, and quality assurance/quality control guidelines.

5.1 Equipment Installation

Runoff flows into an EDB, and fills the basin, and then discharges into an outlet riser. The EDB and its conveyance will handle flows that are generated from less than 25-year storm events. Some discharge from greater than 25-year stormwater events may spill into a second outlet, if designed so. Discharge into the 25-year outlet, if it occurs, will not be monitored. When discharge into the second outlet occurs, it will be documented through basin level records and observation logs.

The influent sampling point will be located upstream of the inlet into the basin and will be accessed through a manhole. The effluent sampling point will be located downstream of the outlet (see *FGN* site maps). Access to the discharge conveyance will be through a manhole. Confined space procedures will be followed when accessing the sampling points (see Appendix II, Health and Safety Plan).

The inflow and outflow conveyances for each EDB will be equipped with a flow measuring device (either a flume or an area/velocity meter) and a sample intake. The flumes will incorporate some sort of depth measuring device. The flumes will be cast into the conveyances during the construction phase. The flow sensors will be installed using manufacturer supplied hardware and in accordance to the manufacturers specifications. Sampler intakes will be mounted in each conveyance upstream of flumes or downstream of velocity/depth sensors. Stainless steel fasteners will be used to secure the intakes to the invert of the conveyances.

Sampler intakes will be mounted in each conveyance at least 0.6 m upstream of the flume or 1.2 m downstream of the velocity/depth sensors. Stainless-steel concrete anchors will be used to secure the intakes to the invert of the conveyances.

Sensor wires and intake tubing will be routed through conduit from the manholes to equipment enclosures positioned on level ground near each manhole. The equipment enclosures will house the data logger/controller assemblies, samplers, cellular modem equipment, flow metering electronics, and batteries. A rain gauge will be mounted on a pole located adjacent to the inlet equipment enclosure. This pole will also support a cellular phone antenna and solar panel.

The components of each automatic sampling system used will undergo calibration and verification during installation and during maintenance and pre-storm visits.

There are several design specifications that were considered in designing the sampling points. The location at which flow will be measured will be at least 10 pipe diameters downstream and five pipe diameters upstream (or ten and five times the maximum anticipated head height) of any outfall, obstruction, inlet, or change in direction of the conveyance. The slope of the conveyance leading to the flow measuring point is 2% or less. These two requirements are to insure that the flow is fully developed and is subcritical at the point where flow is measured. Only experienced field crews will install monitoring equipment.

5.1.1 Water Quality Samplers

The water quality samplers to be used at an EDB will be automatic and composed of a peristaltic pump, a liquid detector, and a base to hold a sample bottle and ice. Each time a pre-determined volume of liquid passes the sampling point, the data logger/controller will signal the pump to deliver a self-calibrated sample volume. The suction hose used with the sampler will be 3/8-inch pure Teflon® tubing. Therefore, the sampler will be equipped with 3/8-inch silicon peristaltic tubing and a 3/8-inch stainless steel or Teflon® intake strainer of low-flow design. Strainers will be attached to the invert of each conveyance using stainless-steel fasteners. Samples will be collected into borosilicate glass bottles.

Materials used in the collection of stormwater samples will meet strict criteria to prevent any form of contamination of the sample. These materials will allow for both inorganic and organic trace toxicant analyses from the same sampler and composite bottle. Only Teflon® and the highest grade of borosilicate glass are suitable for both trace metal and organic analyses from the same composite sample bottle. Bottles will be cleaned according to the procedure described below or in an equivalent manner such that bottles are decontaminated to blank acceptance levels. Sample hoses will also receive a thorough cleaning annually prior to the wet season. They will not be cleaned after each storm event. These bottles and hoses will be evaluated through a blanking process to verify that the composite bottles and sample hoses are contamination-free and appropriately cleaned for both inorganic and organic analyses.

5.1.2 Cleaning Procedures for Composite Bottles

Bottles will be:

1. Rinsed three times with warm tap water.
2. Scrubbed with a clean plastic brush.
3. Soaked in a 2% detergent (e.g., Contrad®) solution for at least 48-hours.
4. Rinsed three times with tap water.
5. Rinsed five times with Milli-Q or equivalent water, rotating the bottle to ensure contact with the entire inside surface.
6. Rinsed three times with hexane while rotating the bottle, and then air-dried.
7. Rinsed six times with Milli-Q water.

8. Soaked in 2N nitric acid for a minimum of 24-hours.
9. Rinsed six times with Milli-Q water.

5.1.3 Cleaning Procedures for Teflon® Hose and Other Sampling Equipment

Teflon® hose and other sampling equipment will be:

1. Teflon hose will be rinsed three times with a 2% Micro® solution or equivalent. Other sampling equipment will be washed with a 2% Micro® solution and a clean plastic brush.
2. Rinsed three times with warm tap water.
3. Rinsed three times with Milli-Q or equivalent water.
4. Rinsed three times with 2N nitric acid.
5. Soaked at least 24-hours in 2N nitric acid.
6. Rinsed three times with Milli-Q water.

5.1.4 Flow Monitoring

A true flow-proportioned sample is a composite of individual sample aliquots that are collected for each set volume of water that passes by a sampling point. To obtain a valid composite sample, direct flow measurements will be made to control the sampling interval. At an EDB, both primary and secondary flow metering devices will be used. A primary flow-measuring device is a hydraulic structure (e.g., flume) inserted into a channel that changes the level of liquid in or near the structure. By knowing the shape and dimensions of the hydraulic structure, flow through or over the structure is related to the liquid level by a mathematical relationship. A secondary flow metering device measures both liquid velocity and depth. Primary devices are preferable, unless hydraulic characteristics prohibit them.

A primary flow measuring discharge flume will be used at the discharge sampling point. A lookdown level meter will be used in conjunction with the discharge flume. This meter contains an ultrasonic transducer. This transducer will be suspended in a location that is clear of obstructions, at a known distance above the invert of the conveyance, and approximately 0.3 meters above the maximum expected water height. The sensor will be mounted far enough away from the sidewalls and rungs of ladders in the manhole to prevent reflections of sound energy from them to be misinterpreted as energy reflected off the surface of the water.

Because the influent sampling point will most likely be submerged during storms, an area-velocity (AV) flow meter (or equivalent) will be installed. These meters will have single-point, internally-mounted, low profile depth and velocity sensors. A pressure transducer that senses gauge pressure will be used to measure depth. The pressure transducer will be vented to atmospheric pressure. The pressure transducer can be separate or integral to the velocity sensor. The velocity sensor will operate using the

Doppler principal for measurement. The depth and velocity sensors will be secured to the invert of the conveyance using a mounting ring supplied by the manufacturer. This same meter will record basin water levels for depths greater than 10 cm.

5.1.5 Rain Gauge

The rain gauge to be used at an EDB will be a "tipping bucket" design that incorporates a small "bucket" which holds a known amount of rainfall. When the bucket is filled, it tips the water out, momentarily closes a switch, and then resets itself and starts the process again. The data logger/controller counts each switch closure to accumulate rainfall totals. The rain gauges used at this site will tip after every 0.01 inch of rain.

5.1.6 Power

The source of primary power for both sampling systems will be 12-volt deep-cycle marine batteries. A separate battery will be used to power the autosamplers, modems, and flow meters. Solar panels will be used to maintain the charge on the batteries.

5.1.7 Telecommunications

Cellular modem transceivers will be used to provide remote telecommunication access to the monitoring equipment. The ability to access a sampling station, monitor the status of the station in real-time, modify storm criteria, download new programs, and recover data allows for more cost effective, efficient monitoring.

A high performance base station antenna with filter will be installed; the filter will be installed from the lead-in of the antenna to prevent damage to the sampling station equipment due to nearby lightning strikes.

5.1.8 Equipment Enclosures

Walk-in fiberglass enclosures will be used to house the samplers and associated electronic equipment. These enclosures are to be bolted to the concrete pads and are to be locked to secure the monitoring equipment.

5.2 Maintenance and Calibration

A complete maintenance program will be performed at an EDB after each storm event during the monitoring period, or in the absence of rain, on a monthly basis. Maintenance will include checking the performance of the equipment, checking power supplies, inspecting and clearing intake structures, cleaning contaminated equipment, and performing necessary equipment calibrations. Calibrations will be conducted in accordance to specifications in the individual component manuals.

A monitoring equipment maintenance inspection checklist (Form D Tab 4 of the *FGN*) and a field log (Form F Tab 5 of the *FGN*).will be completed during each maintenance visit

Stormwater equipment maintenance visits will be thoroughly documented. Written documentation includes the action taken at a site as well as the date performed. Accurate and thorough records of every station visit will be maintained and will aid in the evaluation of an EDB's performance. The logs illustrated in Forms I, J1, J2, and K of Tab 6 in the *FGN* will be used to document maintenance and calibrations.

5.3 Preparation and Logistics

Success of the sampling effort requires careful preparation and planning to assure that high quality samples are obtained in association with each storm event.

5.3.1 Weather Tracking

Weather tracking will be the responsibility of the Task Order Manager and Storm Control personnel. During the wet weather season, the weather will be continually monitored with increased frequency as incoming systems are predicted. Sources of weather information to be used to track incoming storms include the following: National Weather Service, Weather Watch Service, Weather Network (WeatherNet), the Alert system from San Diego County, public broadcast information available on the Weather Channel and local news stations, and radar and satellite images downloaded from the Internet (e.g., www.weather.com).

5.3.2 Mobilization and Staffing

A staffing plan, which designates personnel and equipment for each facet of the storm monitoring, will be developed as soon as a potential event is forecast. Crews will consist of two individuals. The staffing plan will include the following information:

- Personnel needed for each position.
  - Storm Control
  - Shift Leader
  - Crew Chiefs
  - Crew Assistants
- Shift and zone (pilot facilities manned by a single crew) designations.
- Equipment mobilization.
- Communication channels.

Equipment needed for stormwater sampling includes sampling equipment, sampling containers, safety equipment, personal rain gear, Storm Kits, and vehicles equipped with some type of mobile communication and highway safety equipment (see lists). The necessary equipment will be loaded into the appropriate vehicles early in the storm preparation sequence.

Storm Kit Equipment List

Keypad/display.
9-pin cable from keypad to data logger.
Full set of keys (on floatable bobber).
Flashlights (2).
Maps for required areas.
Large flat screwdriver.
Small flat screwdriver.
Umbrella.
High quality alkaline D-cell batteries.
Spare sample labels.
Pencils and indelible markers.
Desiccant (packages and jar).
Diagonal clipper.
Electrical tape.
Cable ties (assorted sizes).
Utility knife.
Ziploc baggies (assorted sizes).
Labeling tape.
Polyethylene gloves.
Rubber bands.

Storm Mobilization List

Storm kit.
Log books.
pH meter.
Paper towels.
DI (de-ionized) water squirt bottles.
Tape gun with clear tape.
pH grab bottles.
Spare sample labels.
Ice scoop.
Sample control paperwork.
Extra fine indelible markers.
20 liter bottles in 10-gallon containment buckets.
Grab sample bottles.
Coolers and ice.
Grab pole.
DI water (3-gallon jug).
Two-way radio or cellular phone.
Personal rain gear.
Any necessary safety gear.

Communication Channels

Communication channels will be established for personnel to contact each other before and during a storm event. Phone lists with home and work numbers and other key contacts will be made available to potential crew members. Two-way radio or cellular telephone communication links to field crews are essential for efficient stormwater monitoring.

5.3.3 Monitoring Station Preparation

Prior to a storm event, the EDB monitoring stations will be made ready to sample. This preparation includes entering the correct “Volume to Sample” values, setting the autosampler and the data logger to sampling mode, pre-icing the composite sample bottle, and performing a general equipment inspection. The *FGN* will be consulted for specific details on station preparation.

Determination of Volume to Sample

The latest weather forecast prior to each storm event will be examined to determine the proper "Volume to Sample" value to enter into the system. The amount of expected rainfall, how the station performed during the previous storm and how much water is needed for analysis at the station for each storm event will be taken into consideration.

The "Volume to Sample" is entered as a number with units in kilo-cubic feet (kcf). To determine this number, the drainage area in acres and the runoff coefficient, which is a number that reflects the permeability of the land in the study area, is listed below. Use the following equation to determine the volume of water expected at an EDB for a given rainfall:

A x B x C x 3.63 = volume in kcf

Where:

A = inches of rain
B = drainage area in acres
C = runoff coefficient for land area
3.63 = conversion factor: acre-inches to kilo-cubic feet

To determine how much water will pass the station between samples, divide this result by the number of samples needed to satisfy the water volume requirement for the analysis. A table will be supplied in the field logbook that indicates the Volume to Sample value needed to collect the correct sample amount of water for the amount of expected rainfall.

After the proper Volume to Sample value is determined, it will be entered into the system before the rainfall starts. The runoff value will generally be entered from the remote computer. The value can also be entered upon arrival at the site before the system has entered storm mode. It is important that this value is accurate as possible; if the value is too high, the system will not collect enough water to be analyzed, and if the value is too low, the system may sample too fast to be monitored effectively (i.e., the percent storm capture will drop).

Prepare Sampler

The autosampler will be reset and programmed to take 78, 250-ml aliquots. Also other user-entered parameters (tubing length, head height, bottle size, composite sample, sample upon one pulse, and enabled liquid detector) will be set correctly.

During each site visit, the state of the System Status Flags (switches) and Program Signature will also be recorded. These provide important information on the current sampling mode and overall integrity of the site program.

Ice Sample Bottle

The sample bottle will be iced after the decision has been made to monitor the storm and prior to initial sample collection. If this is not possible, the bottle will be iced immediately upon the first visit.

General Inspection

A brief physical inspection of the equipment will be made to make certain that there are no obvious problems such as broken conduit or a kinked hose. If possible, the intake will be cleared of debris; at sites with confined entry access, this is only possible if the safety requirements listed in Appendix II are met.

Documentation

Upon each site visit, whether during storm mode or not, records of the visit will be accurately recorded on the field form (Form I of Tab 5 in the *FGN*). Whenever possible, any data being recorded by the sampling system (for example, time or current stage) will be verified. If any program parameters are changed, a program parameter log (Forms J1 and J2 of Tab 6 in the *FGN*) will be filled out.

General Visitation Data

During each station visit, several display locations will be recorded. The log sheets will be used as a guide to the proper display locations to record. The following data will be recorded at both the influent and effluent stations:

- Flume Stage (ft)
- AV Meter Stage (ft)
- Velocity (f/s)
- Flume Q (flow in cfs)
- AV Meter Q (flow in cfs)
- Station ID
- Data Logger Battery Voltage
- Flow Meter Battery Voltage
- Cellular Equipment Battery Voltage

Storm Visitation Data

Additional data will be recorded in the logbooks during storm monitoring, including:

- Volume (kcf)
  This is the volume of water that passed the station during the previous execution Interval (one minute).
- Storm Sum
  This indicates the accumulated runoff volume in kilo cubic feet (kcf) that has passed the station since the last sample.
- Percent Storm Capture
  This indicates the percent of the storm effectively sampled by the system, and it provides a quick evaluation of the quality of the monitoring.
- Volume to Sample
  This value indicates the runoff volume (in kcf) that will pass the station before the system will take the next sample.
- Sample Count
  This number indicates the number of samples taken in the current bottle. It automatically re-zeroes every time a bottle is filled.
- Total Rain (inches)
  The total rainfall in inches since the start of the storm. This is accumulated each time that the rain bucket tips.
- Max Flow (day)
  This indicates the Julian day on which the maximum flow occurred.
- Max Flow (time)
  When this number is positive, it indicates that the system was sampling during peak stage. If this number is negative, sampling did not occur during the peak stage because the bottle was full.
- Max Stage (feet)
  This indicates the height of the maximum stage during the current storm.
- Max Flow (cfs)
  This indicates the maximum flow rate during the current storm.
- Storm Volume (kcf)
  This indicates the total volume of water that has flowed past the station since the beginning of the storm.
- Storm Volume Sampled (kcf)
  This indicates the total volume of water that flowed past the station while the system has been in storm mode.

After the data have been recorded, the system will be placed in low power mode and the keyboard unplugged.

5.4 Storm Monitoring

A priority objective of storm monitoring is to maximize the percent storm capture of the composite sample. This will be accomplished by ensuring that a composite bottle does not fill without being changed immediately. If a bottle does fill, the full sample bottle will be replaced and the system will be reset. To determine approximately when the bottle will fill and to ensure that the sampling process is not interrupted, the Storm Sum and the Volume to Sample will be evaluated. By examining how quickly the Storm Sum value is approaching the Volume to Sample value, the approximate time until the next sample is taken can be determined, as well as the approximate time until the bottle fills. The monitoring crew will be aware of the current status of each station in each of its BMP pilot facilities to determine which one will fill a bottle first so they can be on site as the bottle fills. If the station has been set properly for the amount of rainfall, changing the composite bottle will not be necessary. Volume to Sample settings will take into account the volume of sample required to meet analytical needs. This study requires approximately 3 liters of sample to meet these needs.

The data logger pulses the autosampler to take a sample when the accumulated Storm Sum equals the Volume to Sample. The storm sum is then reset to zero and the process is repeated. This continues until the storm ends or the bottle fills. Ideally, the Volume to Sample value will be accurate for the amount of rainfall, and the bottle will not need to be changed during the storm. If, however, the rainfall is different than that predicted, a bottle may fill before the end of the storm. If this occurs, sampling will halt until the bottle is changed and the system is reset. Until the system is reset, part of the storm is not being sampled, and the percent capture will show a decrease. It is therefore imperative that the system is reset and the sample bottle is changed immediately to maintain 100% storm capture.

5.4.1 Storm Procedure

Upon arrival at a station during a storm event the status of the composite sample bottle will be checked immediately. If it is not necessary to change the bottle at that time, the appropriate data on the log sheets will be recorded and the necessary physical measurements and observations will be taken. An approximate time that the bottle will fill will be determined, and, depending on how much time is available, the next station will be visited or wait until the bottle fills.

If the sample bottle is full, the system will be reset immediately, and the bottle replaced. When the bottle has been changed, the necessary station data will be filled in on the field log sheets.

5.4.2 Sample Bottle Replacement

The removal of the sample bottle from the sampler requires great care; the bottles are heavy when full and are very slippery when wet, as well as being expensive and fragile. More importantly, if the sample is lost or contaminated the effort and expense of the storm monitoring process is wasted. Two people will be present to ensure the security of the bottle and of the sample itself. Extreme care will be taken not to kink the intake hose when handling the sampler.

The bottle number will be recorded in the logbook and the bottle will be labeled appropriately. When a new bottle has been put in place, it will be re-iced and the sampler reset to continue sampling. Full bottles will be kept iced.

5.4.3 Storm Monitoring Office

The main objective of the Storm Monitoring Office is to update field crews on the status of their stations. This will greatly reduce the amount of time a crew will spend driving during storms. The monitoring of stations from a remote computer consists of calling each station and recording certain data for evaluation. When it is determined that a sampling system is close to filling a bottle, a field crew will be called and alerted to the status of the station. Remote interrogation of the storm stations will be logged using Form K of Tab 6 in the *FGN*.

Generally, the Storm Monitoring Office is also the storm control position. This means that critical decisions regarding the status of storm monitoring are made with input from the Storm Monitoring Office.

Therefore, this position requires awareness of the latest weather forecasts to make informed decisions on the continued monitoring of the storm.

5.4.4 Post Sampling Procedures

Declaring the end of a storm event may be difficult at an EDB as the basin may hold water for longer than 48 hours and effluent flow may continue out of the basin. Thus, storm events can overlap. If storm events begin to overlap, two criteria will be used to either continue sampling or end sampling. If the effluent has 75% storm capture or more and 8 or more sample aliquots, monitoring will stop and the stations will be shut down. If the effluent has less than 75% storm capture or less than 8 sample aliquots, the influent and effluent sampling will continue monitoring the event until the event stops raining.

After a storm event has ended, the stations need to be shut down. The station will be left ready for the next storm event in case there is insufficient time for a maintenance visit between storms. The following items will be taken care of, and everything will be well documented in the field logbook.

1. The storm monitoring program will be reset to prepare for another storm event.
2. The sample bottle will be replaced and the sampler reset.
3. The station will be physically inspected to determine if any damage was sustained during the storm event. The flow sensor will be inspected to determine if it is blocked by debris, or the intake is clogged. (This is only possible if confined space requirements are met).
4. The data will be retrieved. This will be done via modem from the remote monitoring computer.
5. Battery voltages will be checked; batteries that are low will be replaced.
6. An Empirical Observation Checklist will be completed (Form H Tab 6 of the *FGN*) one time during the event.

Data Retrieval

Data will be retrieved (dumped) from the data logger after each storm event during the storm season, and, during dry weather, approximately every month.

Chain of Custody Forms

When the grab samples have been collected, the paperwork will be filled out to ensure a smooth transfer of samples to the analytical laboratory. Chain-of-custody forms will be filled out in detail describing the type of sample, the quantity of samples, and the time that the samples were collected. These forms will accompany the samples to the laboratory.

5.4.5 Evaluation

Upon termination of a storm event monitoring, evaluation of the influent and effluent stations' performance will be documented and reviewed before the samples collected are deemed valid. Evaluation of a monitoring station's performance is based on the answers to the following questions:

- Was the storm representative of the effectiveness range of the EDB?
- Was capture of peak flow or runoff achieved at both sampling points?
- Did the equipment perform as designed throughout the duration of the storm event?
- Did the samplers accurately collect equal and reliable storm sample aliquots?
- Did the EDB work as designed?

5.4.6 Grab Sampling

Total recoverable petroleum hydrocarbons (TRPH) and bacteriological (fecal coliform) grab samples are unsuitable for collection by automatic means, and will be collected for

two storms each monitoring year. TRPH is inappropriate because some material adheres to the surface of the tubing and the composite sample container. Automatic sampling for bacteria is inappropriate because the sampling equipment is not sterile after installation and exposure to the elements.

It is imperative that collected grab samples are transferred to a designated meeting location immediately after the sampling has been completed. Chain-of-custody forms for the samples will be completed and transport of the samples to the analytical laboratory will be coordinated to ensure that samples are handled and analyzed within the proper holding times to the extent possible.

It is essential that the following sample handling protocols be followed when collecting grab samples to keep contamination to a minimum:

- Turn the vehicle engine OFF to minimize exposure of the sample to exhaust fumes.
- Keep sample containers in clean coolers until sampling is actually initiated.
- Store filled sample bottles in clean coolers at 4°C.
- Keep the bottle lid clean and free of debris while the bottle is open.

Grab samples will be collected as near to the sampling point as possible. When unable to collect a sample near the intake, one will be collected as near the center of flow as possible or in an area of sufficient velocity to ensure good mixing. Both sampling points require a grab pole to collect the necessary grab samples. Containers will be fitted snugly into the bottle holder and the bottles will be seated on the upstream side of the grab pole to reduce potential contamination. The bottle will be filled with the mouth of the bottle faced into the current, if possible. Also, the bottle will be labeled before it is filled as it is nearly impossible to write on wet bottles, the station will be listed on the bottle to coincide with the station sampled.

Each type of grab sample may require special treatment to ensure the quality of the sample and the safety of the sampler. The preservative in the sample bottles is usually a concentrated acid, so care will be taken that the preservative does not come into contact with the skin. Gloves will be worn when handling sample containers. Both types of grab samples are discussed below.

> **TRPH** analyses will be performed for diesel, gasoline, and oil fractions and reported separately for each. Samples to be analyzed for TRPH gasoline fraction will be preserved with a concentrated acid (HCl), while TRPH diesel and oil containers are unpreserved. The sample bottles will be filled to below the neck and just above the shoulder. The bottle will not be overfilled because the preservative will be washed out. If the bottle is just slightly overfilled, a small amount of sample will be poured off after the preservative has mixed with the sample. A small amount of headspace is required in the containers to allow for

expansion if the sample freezes. These grab samples will be collected as soon as possible after runoff is detected.

Fecal Coliform samples are preserved with a small sodium thiosulfate tablet. To retain the tablet while sampling, it will be removed from the container when it is dipped into the flow. The bacteria bottle will be turned over causing the tablet to fall onto the cap of the bottle; the cap will be removed and set somewhere that will prevent it from becoming contaminated (out of the rain). The sample bottle will be filled to the shoulder, the cap tipped so the tablet falls into the sample and the cap secured to the bottle. Storm control will direct the field crews as to when to collect this grab sample.

Attempts will be made to maintain the 6-hour holding time for bacteria to the extent practical. However, storm field conditions and safety concerns may prove this holding time infeasible. A maximum holding time of 24 hours will be followed, in accordance with "Standard Methods for the Examination of Water and Wastewater," 18th Edition.

5.5 Sample Tracking and Handling

Samples, regardless of their matrix, will be kept properly chilled and transferred to the analytical laboratory within holding times to achieve the highest quality data possible. To ensure proper tracking and handling of the samples, documentation will accompany the samples from the initial pickup to the final extractions and analysis. This documentation includes: Chain-of-Custody Forms (see Form M of Tab 7 in the *FGN*). These forms or equivalent will be used to track and handle samples.

Collected samples will be labeled with the following information:

- Project name.
- Date.
- Time.
- EDB name and number.
- Sampling location.
- Preservative.
- Collector's initials.
- Sample I.D. number.
- Analyte(s) to be analyzed.
- Grab or composite sample

The analytical suite for each station depends upon the total volume of water collected for the storm event. A Priority Analysis Sheet will be used in conjunction with a Sample

Bottle Evaluation to determine the analytical suite for each station, based on the volume of water collected at that station, the volume to sample, and the percent storm capture.

Duplicate and QA/QC samples will be collected for the media sampled, where possible. Duplicate and QA/QC samples will be prepared from the volume of the sample collected. The crews collecting the samples will be fully briefed on the procedures for collecting QA/QC samples, and will be familiar with the sample identification numbering scheme for these samples because they are to be submitted to the laboratory as blind samples. These samples will be labeled, recorded on the Chain-of-Custody Form, and transported to the analytical laboratory.

Grab samples will be transported to the appropriate laboratory as soon as the grab sampling is completed, whereas the sample bottles for composite samples are transferred at the end of the storm event. Samples will be properly logged on the chain-of-custody form and kept chilled in coolers. There will also be a field duplicate and extra water collected for QA/QC samples. These QA/AC grab samples will be collected at one of each consultant's BMPs during each storm event monitored. The sampling stations will be selected by Storm Control for collecting the duplicate grab samples. The crews monitoring the stations will be fully briefed on the procedures for collecting QA/QC samples, and will be familiar with the sample identification numbering scheme for these samples because they are to be submitted to the laboratory as blind samples. These samples will be labeled, recorded on the chain-of-custody form, and transported to the analytical laboratory.

Each sample collected will receive a unique alphanumeric code (sample I.D. number) for tracking. This code will be standard for samples and contain information as to the station, date, and sequential monitoring event number. The following is an example of this code:

SITE No.-IN-32898-001

Where:

Site No. = Site number of BMP site.
IN = Influent sampling point at the site; EF = effluent sampling point.
32898 = Julian day and year
001= First storm event monitored during this program at this location

If multiple bottles are used or needed, the last data field will indicate the bottle number and the total bottles in that sampling event (i.e., 001-1/3, 001-2/3, 001-3/3 for a three-bottle collection scheme).

A set of QA/QC samples will be provided with each type of sample. The analytical laboratory may also require additional QA/QC samples if one type of analysis is to be run in more than one batch.

Duplicate and QA/QC samples will be analyzed for the same standard analytes as the field samples. Most field QA/QC samples are submitted blind to the analytical laboratory, however, additional sample volumes provided to the laboratory for laboratory replicates or matrix spikes and matrix spike duplicates will be clearly identified. The main types of QA/QC samples that will be utilized for this study are as follows:

Duplicate Analyses - These analyses will be performed on one sample each monitoring year (i.e., 1998/1999 and 1999/2000) and will require an additional set of sample containers. Duplicate samples will be analyzed for the full list of analytes. The results will allow evaluation of sampling error introduced by both field sampling and laboratory analyses by showing the reproducibility of the sample collection and analyses. Duplicate samples will be sent "blind" to the laboratories.

Duplicate samples will be identified by adding 500 to the sequential storm event number. For example, a duplicate sample for the site identified above will be:

SITE No.-IN-32898-501

Blanks - These are for field as well as laboratory samples. Blanks help verify that the equipment and the sample containers are not contaminated, and the sampling techniques used are non-contaminating. Core soil and surface sediment collection equipment will be rinsed with reagent grade analyte free deionized water separately. The collected rinsates will be analyzed for the full list of analytes for the primary samples. Blanks will also be run on the analytical equipment. Rinsate blanks will be run on two samplers used by each consultant at one of their BMPs prior to the installation of the equipment. Each time a batch of composite bottles is cleaned, five percent of those bottles will be blanked. Each time a batch of filters is purchased five percent of those filters will be blanked.

Equipment rinsate blanks will be identified by adding 600 to the sequential storm event number. For example, an equipment rinsate blank collected from the monitoring equipment from the site identified above will be:

SITE No.-IN-32898-601

Field blanks will be identified by adding 700 to the sequential storm event number. For example, a field blank collected at the site identified above will be:

SITE No.-IN-32898-701

Matrix Spike and Matrix Duplicate Spike (MS/MSD) - The laboratory will require additional sample volumes for analyses that require matrix spikes and matrix spike duplicates to evaluate precision and accuracy of the laboratory analytical method, and to evaluate any matrix interference. MS/MSDs are analyzed for their analyte(s) and then spiked with a known amount of analyte(s). One MS/MSD sample will be run on metal samples collected during each event sampled, if enough sample volume has been collected.

MS/MSD samples will be indicated on Chain-of-Custody Forms by clearly identifying that the sample is for MS/MSD purposes.

Laboratory Replicate/Split - This QA/QC analysis will require additional sample volumes. It is a duplicate analysis performed on the same sample and evaluates the repeatability (precision) of the analytical laboratories' results. One split sample will be run from one of each consultant's BMP sampling locations during each storm event sampled and analyzed for the full list of analytes.

Laboratory replicate/split samples will be indicated on chain-of-custody forms by clearly identifying that the sample is for laboratory replicate/split sample purposes.

5.6 Laboratory Selection, Sample Container Preparation, and Analytical Methods

5.6.1 Laboratory Selection

The selected laboratories have extensive experience with environmental samples and have the ability to provide expeditious analysis. Selected laboratories are certified by the California Department of Health Services for the requested analyses. Refer to Tab 2 in the *FGN* for specific laboratory listings.

5.6.2 Holding Times, Sample Bottles, and Preparation

The laboratories will be responsible for providing appropriate sample containers, and when necessary, with preservatives for each analysis. Table 5.1 provides a summary of sample volumes required for each analysis, along with the types of containers, holding times, and preservative. Because additional volumes are necessary for laboratory QA/QC, sample containers will provide at least twice the volume necessary to perform the requested analysis. The volume of the stormwater composite from each site is often the critical factor in determining the volume of sample that can be provided to the laboratory. The Project Task Order Manager and/or Storm Control personnel, in conjunction with the laboratories, will determine the allocation of sample volume for different analyses if sample volumes are not adequate to provide additional volume for each analysis. Table

5.1 lists the analyses along with a priority ranking. Also listed on Table 5.1 are the analytical methods and reporting limits.

5.6.3 Project Reporting Limits

Recommended analytical methods and reporting limits for this project are listed in Table 5.1. The reporting limits in this table are target reporting limits. In some cases, reporting limits may need to be adjusted due to limited sample volumes or potential matrix interference. In such cases, appropriate data qualifiers will be applied to the associated data.

5.6.4 Laboratory Data Package Deliverables

Laboratories will be required to provide a three-week turnaround on deliverables. The deliverable package will include a hard copy and electronic data files. The hard copy will include standard narratives identifying any analytical or QA/QC problems and corrective actions. The electronic data files will contain information found in the hard copy reports submitted by the laboratories. Individual data sets will be submitted as either Microsoft Excel workbook files or as Microsoft Access database files in accordance with the Caltrans Data Management Plan – Data Reporting Protocol and Database (CTSW-TM-98-005). Each consultant will be responsible for laboratory coordination and data management.

Table 5.1 Water Matrices
Analytical Parameters, Methodologies, Reporting Limits, Holding Times, Container Volumes and Types, and Preservation

Analyte	Priority Rank	Reporting Limit	Units	Analytical Technique	Method Number	Holding Time	Minimum Sample Volume	Preferred Volume and Container Type[1]	Preservation
Conventional									
pH	1	0.1	Unit	Electrode	EPA 150.1	Immediately[2]	100 mL	1-100 mL glass/plastic	4°C
Specific Conductance	1	1.0	µmhos/cm	Electrometric	EPA 120.1	Immediately[2]	500 mL	1-500 mL glass/plastic	4°C
Hardness	5	2	mg/L	Titrimetric/ Colorimetric	EPA 130.2	6 months	100 mL	1-200 mL glass/plastic	HNO_3 to pH<2, 4°C
Total Suspended Solids	1	1	mg/L	Dried Filter Weight	EPA 160.2	7 days[3]	1 L	1-500 mL glass/plastic	4°C
Nutrients									
Nitrate-Nitrogen	2	0.01	mg/L	Colorimetric Ion Chromatography	EPA 353.3 EPA 300.0	28 days 48 hours	200 mL 200 mL	1-500 mL plastic 1-500 mL plastic	4°C and H_2SO_4 to pH<2 4°C
Total Kjeldahl Nitrogen	3	0.1	mg/L	Titrimetric/ Colorimetric	EPA 351.3	28 days	500 mL	1-1L plastic	4°C and H_2SO_4 to pH<2
Total Phosphorus	4	0.002	mg/L	Colorimetric	EPA 365.3	28 days	100 mL	1-250 mL plastic	4°C and H_2SO_4 to pH<2
Total/Dissolved Metals[4],[5]									
Copper	1	1	µg/L	ICP-MS	EPA 200.8	6 months	2 @ 500 mL	2-1L plastic	4°C and HNO_3 to pH<2 and filter
Lead	1	1	µg/L	ICP-MS	EPA 200.8	6 months	2 @ 500 mL	2-1L plastic	4°C and HNO_3 to pH<2 and filter
Zinc	1	1	µg/L	ICP-MS	EPA 200.8	6 months	2 @ 500 mL	2-1L plastic	4°C and HNO_3 to pH<2 and filter
Organic									
Total Petroleum Hydrocarbons – Diesel/Oil	Grab	250/200	µg/L	GC	EPA 8015M	14 days	1 L	2-1L amber glass	4°C
Total Petroleum Hydrocarbons – Gasoline	Grab	50	µg/L	GC	EPA 8015M	14 days	2-40 mL	3-40 mL VOA vials	4°C, HCl to pH<2
Bacteria									
Fecal Coliform	Grab	2	MPN/100 mL	Multiple-tube	SM 9221E	6 hours[6]	50 mL	1-100 mL plastic	4°C

1. Analytes with the same preservative can be combined into a single container if the same laboratory is performing the analyses.
2. pH and Specific Conductance will be measured by the laboratory immediately upon receipt of the samples.
3. 7 days based upon limit for measuring TSS/no regulatory limit.
4. Total and dissolved metals samples are collected in separate containers. Only the total metals container will receive nitric acid.
5. Dissolved metals will be filtered in the laboratory prior to acidification.
6. Attempts will be made to maintain the 6-hour holding time for bacteria samples to the extent possible. When not possible, a maximum holding time of 24 hours will be followed in accordance with "Standard Methods for the Examination of Water and Wastewater", 18th Edition.

5.7 Sediment Sampling

As part of the maintenance program, sediment will be removed from the BMP when flows are hydraulically impeded. It is anticipated that sediment will accumulate relatively slowly over time. However, should sediment deposit in a rapid manner, an intermediate step of stockpiling may become necessary before offsite disposal. Section 5.7.1 provides procedures to be used when assessing potential sediment contamination in the event intermediate onsite storage is necessary.

This section describes the sample collection procedures and analyses for assessing the quality of sediment removed from an EDB for disposal. Evidence of oil and grease, antifreeze, solvents, fuel, hydrogen sulfide, and any other noxious substance will be noted. Observations will be used to determine if more than the standard list of analytes is required. Observations will be documented on a checklist form (Form G in the *FGN*). The standard list (Table 5.2) is based on highway contaminants that have the potential to exceed hazardous waste criteria. After laboratory analysis, results will be compared to regulatory limits listed in California Code of Regulations (CCR) Title 22, Section 66261.24 and Department of Toxic Substances Control (DTSC) variances. Based on this evaluation, proper disposal methods will be chosen.

5.7.1 Sediment Collection

Procedures in EPA Publication *Test Methods for Evaluating Solid Waste, Physical/Chemical Methods (SW-846)* provide a method for determining the mean concentration of a given contaminant within a soil mass and the appropriate number of samples necessary to calculate this mean to the specified confidence interval. Initial sampling will generate a minimum number of samples/analyses as described below. Additional sample analyses may be required to meet the confidence levels given in *SW-846*, therefore archiving of samples will be necessary. Archived samples will be appropriately preserved and analyzed within the maximum holding time specified in Table 5.2. None of the samples will be allowed to be composited. The Quality Assurance/Quality Control (Appendix III) describes the QA/QC objectives for sediment samples. The minimum number of discrete samples initially required is given below:

- Drums: A minimum of one sample will be collected from each drum.
- Stockpiles less than 10 cubic yards: A minimum of two samples will be collected, one from each half of the stockpile. Sampling points will be selected randomly within each half.
- Stockpiles from 10-20 cubic yards: A minimum of three samples will be collected, one from each third of the stockpile. Sampling points will be selected randomly within each third.

- Stockpiles from 20-100 cubic yards: A minimum of four samples will be collected, one from each quarter of the stockpile. Sampling points will be selected randomly within each quarter.
- Stockpiles from 100-500 cubic yards: A minimum of one sample for each 25 cubic yard portion will be collected. The stockpile will be sectioned into 25 cubic yard portions to obtain a minimum of one sample for each 25 cubic yard portion. Sampling points will be selected randomly within each 25 cubic yard portion of the stockpile.

Random samples will be selected from locations on a three-dimensional grid. If the presence of materials such as boulders, debris, etc. hinder this process, the sample will be collected as close as possible to the randomly selected point without altering the essence of the random selection process. The following steps will be used to collect sediment samples:

1. Don personal protective equipment.
2. Locate the sample point in the stockpile or drum.
3. Collect the sample using a soil probe or equivalent. Ensure that the sample is collected at the correct depth and location that was randomly selected.
4. Fill one 8-ounce glass jar with a portion of the sample and close the container with the cap, using care not to aerate (volatilize) the sample. This jar will be labeled and analyzed for TRPH and VOCs.
5. Homogenize the other portion of the sample in a disposable bowl using a disposable spatula or spoon. Fill a second 8-ounce glass jar with this portion of the sample and close the container with the cap. This sample will be labeled and analyzed for metals.
6. Wipe the outside of each sample container with a clean paper towel.
7. Record the sampler's initials, date, and time on the pre-labeled sample bottle.
8. Place the sample containers in individual zip-top plastic bags and seal the bags.
9. Immediately pack the samples into a chilled cooler.
10. Record the required information on the Chain-of-Custody Form.
11. Document the sampling event, recording information in the designated field logbook.
12. Repeat the above steps until the minimum number of samples has been collected.

5.7.2 Sediment Analyses

Unless observations indicate additional testing, sediment samples submitted to the laboratory will be analyzed for the list of analytes in Table 5.2 using CCR, Title 22 criteria (State of California, 1985). This table also lists the required reporting limits, analytical holding times, required preservation, and container sizes and types. Laboratory turn around times and data deliverables will be same as those for the stormwater samples.

Table 5.2
Sediment Matrix (Disposal)
Analytical Parameters, Methodologies, Reporting Limits, Holding Times, Container Volumes and Types, and Preservation

Parameter	Method	Units	Reporting Limit	Maximum Holding Time	Preservation	Container Size/Type(1)
Total Recoverable Petroleum Hydrocarbons (TRPH)	EPA 418.1	mg/kg	10	28 days	4^oC	8 oz glass jar
Volatile Organic Compounds	EPA 8260B	mg/kg	SW – 846 (5) requirements	14 days	4^oC	8 oz glass jar
California Code of Regulations (CCR), Title 22 Metals(2):	EPA 6020/7471	mg/kg	SW – 846 (5) requirements	180 days 28 days for mercury	4^oC	8 oz glass jar
California Code of Regulations (CCR), Title 22 Waste Extraction Test (WET) Metals(3):	STLC Extraction	mg/L	SW – 846 (5) requirements	180 days 28 days for mercury	$4^o C$	NA
Toxicity Characteristic Leaching Procedure (TCLP) Metals(4):	TCLP 1311	mg/L	SW – 846 (5) requirements	180 days 28 days for mercury	$4^o C$	NA

(1) Each sample will be collected in two 8 oz glass jars
(2) California Code of Regulation (CCR), Title 22 Metals (Sb, As, Ba, Be, Cd, Cr (total), Co, Cu, Hg, Pb, Mo, Ni, Se, Ag, Tl, V, and Zn). Initial waste characterization results may lead to a shorter list of metals for subsequent sediment disposal.
(3) Any sample for total metals that are below the Total Threshold Limit Concentration [TTLC] but exceed the ten times Soluble Threshold Limit Concentration (STLC) will be further analyzed using the WET procedure. WET extracts will be analyzed only for metals which exceed the ten times STLC criteria. Sediments associated with total metal results that exceed TTLC values are automatically considered hazardous and therefore do not need to undergo the WET procedure.
(4) If any of the WET-soluble concentrations are equal to or greater than the TCLP regulatory thresholds, analyze the waste by TCLP.
(5) "Test Methods for Evaluating Solid Waste, Physical /Chemical Methods". SW-846, Update III.(SW-846)

5.8 Empirical Observations

5.8.1 Purpose of Empirical Observations

Performance assessments of BMP facilities cannot be fully ascertained through analytical methods. "Empirical" observations are also critical in determining the overall performance of implemented water quality management practices and in ensuring that the practices are maintained at optimum levels. Other factors such as maintenance activities, environmental variability, and physical processes, which cannot be determined analytically, can greatly influence the performance of a particular BMP. Some of these factors such as rainfall quantity, rainfall intensity, and basin retention times can, and, will be assessed through physical measurements. Other components such as trash build-up, sediment deposition, and runoff appearance can best be assessed through careful documented observations.

5.8.2 Guidelines

Observations will be succinct but also complete. For an EDB performance evaluation, the following observations will be taken at the influent location, basin, and effluent location:

- Rainfall (start and end times, time since last rain, and intensity indication).
- Water level.
- Water quality appearance (visual, olfactory) to make a rough assessment of changes in water quality.
- Visual evidence of short circuiting of basin flow (for wet weather visits).
- Description of amount and location of sediment accumulation in basin.
- Evidence of scouring or resuspension near basin inlet (operation of energy dissipaters).
- Predominant type of litter found in basin.
- Change in litter accumulation and location since previous visit.
- Condition/clogging of outlet structure.
- Evidence of erosion in natural channels below basin outfall.
- Condition of basin floor/formation of low areas with permanent pools.
- Degree and type of vegetation establishment in the basin.
- Stability of basin slopes/evidence of erosion.
- Condition of vegetation surrounding basin.
- Evidence of vandalism of equipment or basin structures.
- Presence of unpleasant odors.

5.8.3 Checklist for Sampling and Monitoring Personnel

Refer to Figure 5.2 for a checklist (log form) that will be completely filled out by sampling and monitoring personnel during every visit to the facility or, at a minimum, once per month (see Section 4.4 for additional inspection parameters).

6.0 REFERENCES

Robert Bein, William Frost and Associates. 1997. *Scoping Study, Retrofit Pilot Program*, Caltrans District 11. Calif. Dept. Trans., Sacramento, CA.

Eaton, A.D., L.S. Clesceri, and A.E. Greenberg, eds. 1992. *Standard Methods for the Examination of Water and Wastewater*, 18th Edition. American PublicHealth Association, American Water Works Association, and the Water Environment Federation.

Larry Walker and Associates. 1997. *Guidance Manual: Stormwater Monitoring Protocols.* Prepared for California Department of Transportation, Sacramento, CA. August 15, 1997.

USEPA. 1997. *Test Methods for Evaluating Solid Waste, Physical/Chemical Methods*, SW-846, Final Update III, June 1997.

Watershed Management Institute. 1997. *Operation, Maintenance, and Management of Stormwater Management Systems.* Watershed Management Institute, Ingleside, MD.

CALTRANS
BMP RETROFIT PILOT PROGRAM

DISTRICT 7, LOS ANGELES

BMP OPERATION, MAINTENANCE, AND MONITORING PLAN

VOLUME II

APPENDIX I-B
INFILTRATION BASINS

September 1999

TABLE OF CONTENTS

Section **Page B-**

1.0 INTRODUCTION 1
1.1 Retrofit BMP Description 1
1.2 Evaluating BMP Performance 2
1.3 Deployment Criteria 3
1.4.1 Data Requirements 4
1.4.2 Data Management 5
1.4.3 Data Analysis 6
2.0 OPERATION AND MAINTENANCE 7
2.1 Operation and Maintenance Needs 7
2.2 Inspection Frequency 7
2.3 Aesthetic and Functional Maintenance 8
2.3.1 Aesthetic Maintenance 8
2.3.2 Functional Maintenance 8
2.4 Maintenance Frequency 10
2.5 Equipment, Resources, and Tools Needed 11
2.6 Debris and Sediment Disposal 12
2.7 Hazardous Waste 13
2.8 Checklist for Inspectors and Operation and Maintenance Personnel 13
3.0 VECTOR CONTROL AND MANAGEMENT 14
4.0 VEGETATION MANAGEMENT 15
4.1 Management for Optimal BMP Performance 15
4.2 Management for Optimal Vector Control 15
4.3 Maintenance Requirements 16
4.4 Checklists 16
5.0 SAMPLING AND MONITORING 17
5.1 Equipment Installation 17
5.1.1 Rain Gauge 17
5.1.2 Power 17
5.1.3 Telecommunications 18
5.1.4 Equipment Enclosures 18

5.2 Maintenance and Calibration 18
5.3 Vadose Zone Monitoring 18
5.3.1 Equipment Selection and Description 19
5.3.2 Lysimeter Preparation, Borehole Preparation, and Lysimeter Installation 20
5.3.3 Vadose Zone Sample Collection 22
5.4 Weather Tracking 27
5.5 Storm Mobilization and Staffing 27
5.5.1 Storm Monitoring Equipment 27
5.5.2 Communication Channels 28
5.6 Soil and Sediment Sampling for BMP Performance Evaluation 28
5.7 Sediment Sampling and Testing for Disposal Purposes 29
5.7.1 Sediment Collection 30
5.7.2 Sediment Analyses 31
5.8.1 General Visitation Data 32
5.8.2 Storm Visitation Data 32
5.9 Sample Tracking and Handling 33
5.11 Laboratory Selection, Sample Container Preparation, and Analytical Methods 35
5.11.1 Laboratory Selection 35
5.11.2 Holding Times, Sample Bottles, and Preparation 36
5.11.3 Project Reporting Limits 36
5.11.4 Laboratory Data Package Deliverables 36
5.12 Empirical Observations 40
5.12.1 Purpose of Empirical Observations 40
5.12.2 Guidelines 40
5.12.3 Checklist for Sampling and Monitoring Personnel 40
6.0 REFERENCES 41

TABLES

2.1 Waste Disposal Services in Southern California
5.1 Vadose Zone Matrix Analytical Parameters, Methodologies, Reporting Limits, Holding Times, Container Volumes and Types, and Preservation
5.2 Soil and Sediment Matrix for BMP Performance Evaluation Analytical Parameters, Methodologies, Reporting Limits, Holding Times, Container Volumes and Types, and Preservation
5.3 Sediment Matrix (Disposal) Analytical Parameters, Methodologies, Reporting Limits, Holding Times, Container Volumes and Types, and Preservation

FIGURES

1.1 Overview of an Infiltration Basin
5.1 Lysimeter Detail
5.2 Sample Collection Configuration
5.3 Lysimeter Well Construction Detail

1.0 INTRODUCTION

The Caltrans Best Management Practice (BMP) Retrofit Pilot Program is a comprehensive water quality monitoring study to evaluate the removal of contaminants in stormwater runoff from Caltrans roads and facilities through a series of BMP pilot installations. The overall objectives of this portion of the program are to document BMP contaminant removal efficiency and technical feasibility.

This Appendix of the Operations, Maintenance, and Monitoring Plan (OMM) applies to the Infiltration Basin (IB). Refer to the consultant's monitoring equipment manuals and stormwater monitoring Standard Operating Procedures (SOPs) for details related to equipment installation, equipment maintenance, and storm monitoring. Maintenance, safety, documentation, and storm monitoring tasks will be carried out according to the procedures detailed in this plan. Additional measures may be necessary due to unforeseen

1.1 Retrofit BMP Description

An IB is a depression used to detain stormwater for short periods until it percolates to the groundwater table or dissipates through evapotranspiration. A properly maintained IB is expected to become dry between storms.

An IB functions as a BMP through filtration of runoff and adsorption of pollutants using site vegetation and soils. An IB that contains a level invert, healthy vegetation, and permeable soil properties are ideal. Based on site geology and groundwater depth, a pressure-vacuum lysimeter will be used at the District 7 IB to determine if pollutant removal mechanisms have an impact to the groundwater.

Runoff fills an IB until it reaches capacity. Afterwards, runoff either bypasses the facility or discharges through a spillway. Energy dissipators are designed into an IB in order to reduce runoff velocities entering the basin, trap sediments, and spread the runoff evenly throughout the basin floor. The IB for the Caltrans District 7 BMP Retrofit Pilot Program has been designed to collect runoff from up to 1-year, 24-hour storm events.

Figure 1.1 Overview of an Infiltration Basin

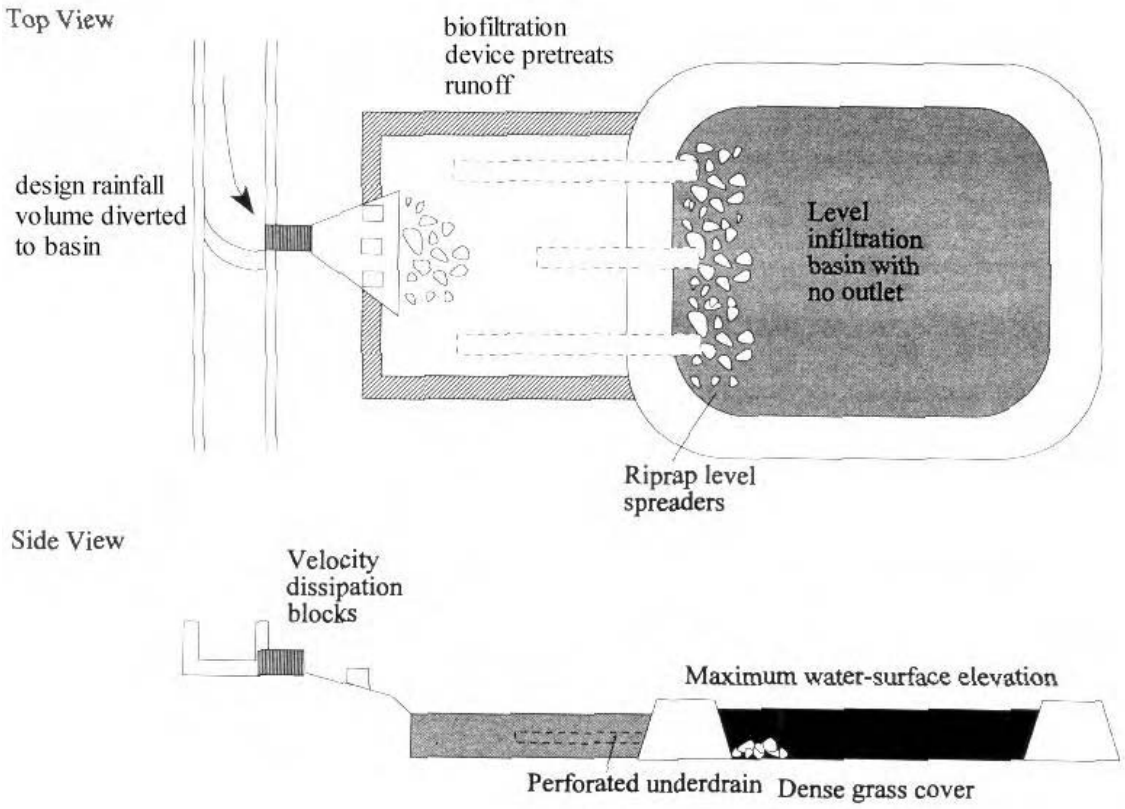

1.2 Evaluating BMP Performance

To effectively evaluate the performance of an IB pilot facility, the following objectives will be met:

- Continuous basin level data, recorded as a function of time, from rainfall events during the study period.
- Rainfall data, recorded as a function of time, from rainfall events during the study period.
- Determine the quantity of runoff treated by the BMP.
- Documentation of inspection and maintenance records.
- Determine basin level fluctuations and degree and rate of infiltration.
- Empirical observations of stormwater runoff and BMP performance, etc.
- Determine and document the level of effort required to maintain the BMP at optimal effectiveness (i.e., treatment of stormwater runoff for storm events producing up to the 1-year, 24-hour peak flow).
- Vegetation management records.

- Determine and document the level of effort required to control vectors of human disease and nuisance insects, rodents, and vegetation at the BMP.
- Determine effects, if any, on the groundwater.
- Determine the concentration of pollutants removed through deposition.
- Determine and document BMP performance evaluation criteria relative to the qualitative benefits of the BMP.

An IB infiltrates stormwater to the subsurface, resulting in disallowing stormwater runoff to discharge to receiving waters. Thus, the effectiveness of an IB is related to the rate or efficiency of infiltration. To determine infiltration efficiency, the water level within the basin will be constantly monitored. Since surface sediment deposition affects infiltration rates, deposition rates will also be monitored along with the concentration of pollutants removed through deposition.

The effectiveness of an IB is also related to the implementation of maintenance procedures and the documentation of empirical observations. Items such as erosion and bank stability, maintenance of storage volumes, trash build-up, clogging, and vegetative health may directly affect the performance of an IB.

An IB contains ponded water for varying periods of time. As such, the potential to produce vectors of human disease and nuisance insects, rodents, and excessive vegetation exists.

1.3 Deployment Criteria

Empirical observations will be made at the IB during eight storm events over two wet seasons, weather permitting. Storms targeted for observation will be separated by a minimum of 48 hours (72 hours preferably). This facility will be inspected per the guidelines given in Section 4.0 of the *Field Guidance Notebook* (*FGN*), which include a mandatory inspection after every storm greater than 0.50 inch. In addition, samples from the vadose zone will be collected in December and January during two wet seasons.

Based on the rainfall requirements needed to generate monitorable flows into the pilot, Caltrans has developed a refined monitoring team deployment criteria. The refined deployment criteria defines when to chase storms based on season, storm forecasts, and the current count of successfully monitored storms.

The deployment season, in which monitoring teams remain "on-call" and fully staffed, will be restricted to the portion of the year when rainfall is most probable and better predictable. Summer showers are not seen as predictable events, and dry watersheds and BMPs will retain more water which results in less effluent.

The deployment season will start on October 1. The season shall end after 3 weeks of dry weather where less than 0.2" of rainfall occurs in the San Diego area, but end no sooner than April 1 and not later than May 30th. This approach will provide a plan that adjusts to wet or dry springs.

The following criteria will decrease false starts, while allowing teams to continue to chase storms based on promising storm forecasts. The criteria will be used for pilots, regardless of drainage area size or land use.

“Forecast-Unlikely” set to less than 0.25” rain and less than 50% probability, (Decision = "No Go")

“Forecast-Marginal” set to 0.25” or greater and 50 –75% probability, (Caltrans Decision)

“Forecast-Highly Probable” set to 0.25” or greater and greater than 75% probability. (Decision = "Go")

Forecast information will be gathered as indicated in the OMM manuals (e.g., internet sources). As always, if conditions happen to allow samples to be successfully taken for any storm larger than 0.1", that sampling would be considered as a successful event, which would count towards fulfilling Scoping Study requirements.

When a specific pilot is successfully monitored for the total required storms per the applicable Scoping Study, the decision to further deploy to monitor that pilot will fall to Caltrans and no commitment to monitor beyond the terms of the Scoping Studies can be made at this time.

1.4 Data Collection and Compilation

1.4.1 Data Requirements

The following data will be collected to assess the performance and maintenance aspects of an IB:

- Continuous basin level data, recorded as a function of time, from rainfall events during the study period.
- Rainfall data, recorded as a function of time, from rainfall events during the study period.
- Determine the quantity of runoff treated by the BMP.
- Documentation of inspection and maintenance records.
- Determine basin level fluctuations and degree and rate of infiltration.
- Empirical observations of stormwater runoff and BMP performance, etc.
- Determine and document the level of effort required to maintain the BMP at optimal effectiveness (i.e., treatment of stormwater runoff for storm events producing up to the 1-year, 24-hour peak flow).
- Vegetation management records.
- Determine and document the level of effort required to control vectors of human disease and nuisance insects, rodents, and vegetation at the BMP.
- Determine effects, if any, on the groundwater.
- Determine the concentration of pollutants removed through deposition.

1.4.2 Data Management

Consultants will be responsible for data management. Overall management of the data will be consistent with established Caltrans procedures for stormwater monitoring projects and this manual.

The consultant's Sample Control Section will be responsible for tracking the analytical process to assure that laboratories are meeting the required turnaround times and are providing a complete deliverable package. Sample Control will also be responsible for accumulating copies of site visit logs, inspection logs, facility maintenance records, vector control sampling data, and logged rainfall and hydrographic data. Sample Control will receive the original hard and electronic copies from the laboratory, system managers, and field crews, and verify completeness and log dates of receipt. A copy of the data sets and log sheets will be filed in Sample Control's central filing system and another copy will be provided to the consultant's Database Manager. The originals will then be transferred to the Task Order Manager and filed with other project documentation to maintain complete project records.

Laboratories, system managers, and vector control crews will provide data in both hard copy and electronic formats. The forms of electronic submittals will be provided to the laboratories to ensure that the files can be imported into the project database with a minimum of editing. A relational database will be used for data. Laboratory data will be maintained and managed using Microsoft Excel® and Microsoft Access®. Files from the basin level monitoring station data will be stored in the same database system and be linked to the laboratory database (core soil, surface sediment, and vadose zone) analytical

results. The basin level files will include rainfall data. Site characteristics will be stored in a separate file and linked to the both the chemical and basin level files to enable useful data queries. Site characteristics will be stored in a separate file and linked to both the chemical and sampling system files to enable useful data queries.

Data will be submitted to Caltrans in accordance with "Caltrans Statewide Data Management Plan—Data Reporting Protocol and Database," a technical memorandum dated 23 April 1998 from Larry Walker Associates to Task Order Managers.

1.4.3 Data Analysis

Descriptive statistics and statistical comparisons between baseline and storm season vadose zone monitoring data will be performed to characterize subsurface impacts. Constituent concentrations will be measured for each water quality parameter from each sampling episode.

Annual surface sediment quality data will be used to estimate total pollutant removal through deposition. Empirical observations, maintenance activities, and vector control activities will be compiled and compared to vadose zone and surface sediment quantity data (see Appendix IV for vector control).

1.5 Encroachment Permit and Restrictions

Visitation to an IB requires a Caltrans Encroachment Permit. A copy of the IB permit is located in Tab 9 of the *FGN*. This permit lists access and safety requirements along with any restrictions. The respective Caltrans District Encroachment Permit Office will be contacted for further information and direction (phone numbers can be found under Tab 2 in the *FGN* portion of the Volume II OMM Plan).

2.0 OPERATION AND MAINTENANCE

2.1 Operation and Maintenance Needs

The operational and maintenance needs of an IB are:

- Maintenance of healthy grass communities to enhance infiltration of stormwater runoff.
- Maintenance of grass height at approximately 12 in, with subsequent removal of trimmings
- Removal of excessive fine grain surface sediment deposits that clog the IB, measure greater than 18 inches in depth, take up 10% of the storage volume, or destroy the vegetation.
- Timely repair of embankments and slopes. Contributing drainage areas will be kept stabilized.
- Erosion repair.
- Monitoring of episodic oil and grease clogging and subsequent removal of contaminated surface sediment which threatens the health of the vegetation.
- Removal of standing water which may contribute to the development of aquatic plant communities or mosquito breeding areas (see Appendix IV for details). If standing water remains in the IB for more than 72 hours, then maintenance is required. The cause of the standing water will be determined. Some possibilities are:
  1. Clogging: when the facility is dry, sediments will be removed.
  2. Seasonal water table conditions: an outlet system may be required to be retrofitted if the problem is not transient.
- Removal of graffiti, grass trimmings, and debris, weed control, and painting.
- Preventive maintenance on monitoring equipment.

2.2 Inspection Frequency

The facility will be inspected and inspection visits will be completely documented at the following frequencies (refer to Tabs 4 and 5 in the *FGN*):

- Once a month at a minimum.
- After every large storm (after every storm monitored or those storms with more than 0.50 inch of precipitation).
- On a weekly basis during extended periods of wet weather.

2.3 Aesthetic and Functional Maintenance

Aesthetic maintenance is important for public acceptance of stormwater facilities. Functional maintenance is important for performance and safety reasons.

Both forms of maintenance will be combined into an overall Stormwater Management System Maintenance Program. Maintenance activities will be carried out by the consultant. Maintenance items are included in the checklist/logs found in Tabs 4 and 5 of the *FGN*. Maintenance activities will conform to practices specified in this manual.

2.3.1 Aesthetic Maintenance

The following activities will be included in the aesthetic maintenance program:

- **Graffiti Removal.** Graffiti will be removed in a timely manner (e.g., within 10 working days) to improve the appearance of the IB and its related monitoring equipment, and to discourage additional graffiti or other acts of vandalism.
- **Grass Trimming.** Trimming of grass will be done around fences and sampling structures.
- **Weed Control.** Weeds will be removed through mechanical means. Herbicides will not be used because these chemicals may impact the water quality monitoring. More specifics on vegetation management are given in Section 4.0.

2.3.2 Functional Maintenance

Functional maintenance has two components:

1. Preventive maintenance
2. Corrective maintenance

Preventive Maintenance

Preventive maintenance that will be done on a regular basis is detailed in the checklists in Tabs 4 and 5 in the *FGN*. Preventive maintenance activities to be instituted at an IB are:

- **Trash and Debris.** During each inspection and maintenance visit to the site, debris and trash removal will be conducted.
- **Sediment Removal**. Surface sediments will be removed when sediment accumulation is greater than 18-inches or 10 percent of the basin volume, whichever is less. Vegetation removed with any surface sediment excavation activities will be replaced through reseeding. Disposal of sediments is discussed in Section 2.6 and will comply with applicable local, county, state, or federal requirements.

- **Sediment Management.** Alluvial deposits at the inlet structure may create zones of ponded water. Upon these occurrences, these deposits will be graded within the IB to maintain the functionality of the IB. Sediment grading will be accomplished by manually raking the deposits.
- **Vegetation.** 70% coverage of bare soil with native grasses will be maintained in an IB at a height of approximately 12 in.
- **Mechanical and Electronic Components.** Regularly scheduled maintenance will be performed on fences, gates, locks, and sampling and monitoring equipment in accordance with the manufacturers' recommendations. Electronic and mechanical components will be operated during each maintenance inspection to assure continued performance.
- **Fertilization and Irrigation**. The vegetation seed mix has been designed so that fertilization and irrigation is not necessary. Therefore, fertilizers and irrigation will not be used to maintain the vegetation cover. If the vegetation does not survive without fertilization and irrigation, then Caltrans will work with the Plaintiff to discuss options for maintaining the BMP.
- **Elimination of Mosquito Breeding Habitats.** The most effective mosquito control program is one that eliminates potential breeding habitats. Mosquito control measures are discussed further in Appendix IV.

Corrective Maintenance

Corrective maintenance is required on an emergency or non-routine basis to correct problems and to restore the intended operation and safe function of an IB. Corrective maintenance activities include:

- **Removal of Debris and Sediment.** Visibly contaminated surface sediment, debris, and trash, which threaten to clog the facility or destroy its vegetation, will be removed immediately and properly disposed of (refer to Section 2.6). Temporary arrangements may be necessary for handling the sediments until a permanent arrangement is made.
- **Removal of Standing Water.** Standing water (for more than 72 hours) will be removed to minimize the risk of development of aquatic plant communities or mosquito breeding areas.
- **Structural Repairs.** When necessary, repairs to structural component of an IB will be made promptly (e.g., within the next ten working days). Qualified individuals (i.e., the designers or constructors) will conduct repairs where structural damage has occurred.
- **Embankment and Slope Repairs.** When necessary, damage to the embankments and slopes of the IB will be repaired promptly (e.g., within the next ten working days).

- **Elimination of Mosquito Breeding Areas.** Consult Appendix IV for controlling mosquitoes.
- **Elimination of Trees and Woody Vegetation.** Woody vegetation will be removed from embankments. See Section 4.0 for further information on vegetation management.
- **Erosion Repair.** Where a reseeding program has been ineffective, or where other factors have created erosive conditions (i.e., pedestrian traffic, concentrated flow, etc.), corrective steps will be taken to prevent loss of soil and any subsequent danger to the performance of an IB. There are a number of corrective actions than can be taken. These include erosion control blankets, riprap, sodding, or reduced flow through the area. Designers or constructors will be consulted to address erosion problems if the solution is not evident.
- **Fence Repair.** Fence repair will be done promptly (e.g., within the next ten working days).
- **Elimination of Animal Burrows.** Animal burrows will be filled and steps taken to remove the animals if burrowing problems continue to occur. If the problem persists, the appropriate vector control specialist (refer to Appendix IV) will be consulted regarding removal steps. This consulting is necessary as the threat of rabies in some areas may necessitate the animals be destroyed rather than relocated. If the BMP performance is affected, abatement will begin immediately according to the directions in Appendix V. Otherwise, abatement will be performed annually in September. If burrows are found in the Infiltration Basin between March 1 and August 30, a biologist needs to confirm that no birds are nesting in the burrow before sealing the hole.
- **General Facility Maintenance.** In addition to the above elements of corrective maintenance, general corrective maintenance will address the overall facility and its associated components. If corrective maintenance is being done to one component, other components will be inspected to see if maintenance is needed.

2.4 Maintenance Frequency

The maintenance indicator document, included as Appendix V, lists the schedule of maintenance activities to be implemented at an IB.

2.5 Equipment, Resources, and Tools Needed

The following resources, equipment, and tools are needed by inspection personnel:

- A Locke level or other surveying equipment.
- Industrial strength flashlight.
- Crowbar.
- Tape measure and other measuring device (e.g., survey rod) to determine surface sediment accumulation depths.
- Local erosion, sediment control, or stormwater management handbooks.
- Trash removal equipment.
- Sediment manipulation/removal equipment (e.g., shovels, rakes, 5-gallon buckets).
- Rain and foul weather gear and other personal protective equipment (PPE).
- This Appendix and *FGN*.
- Copies of necessary inspection reports and forms.
- Encroachment permit.
- Business cards or other identification.
- Camera to document field conditions.
- Orange vest and hardhat.
- Maintenance logs.
- Leather gloves.
- Safety glasses.
- Safety boots.
- Pen or pencil.

Except for the items contained onsite, the maintenance contractors will supply the equipment, tools, and resources required for maintenance activities at an IB. At a minimum, these contractors will supply the following:

- Earth moving equipment (loaders, backhoes, graders, draglines, and vacuum equipment).
- Dump trucks, equipment transports, and other hauling equipment.
- Shovels, picks, rakes, wheel barrels, and other hand tools.
- Pumps.
- Mechanics tools.
- Concrete tools.
- Vegetation maintenance equipment (hand and tractor lawn mowers, gas trimmers, seed spreaders, leaf blowers, chain saws, pruning sheers, hedge trimmers, and wood chippers).
- Painting equipment (brushes, rollers, and sprayers).
- Locke level or survey equipment, tape measures, and sediment probes.

- Safety equipment (gloves, boots, hard hats, reflective vests, safety glasses, traffic control lighting, and confined space entry equipment).
- Camera with film.

To be supplied by consultant to the maintenance contractors:

- This Appendix, *FGN* and approved BMP facility plans.
- Encroachment Permit.
- Logbook containing Maintenance Logs.

No items for maintenance and inspection activities will be left onsite.

2.6 Debris and Sediment Disposal

Waste generated at the IB is ultimately the responsibility of Caltrans. Consultants responsible for operating, maintaining, and monitoring the IB will be responsible for removal, and disposal of waste material. Disposal of sediment, debris, and trash will comply with applicable local, county, state, and federal waste control programs. Table 2.1 shows a few possible disposal services for waste material.

Table 2.1
Waste Disposal Services in Southern California

Laidlaw/Rollins (OPC) 5765 Alba Street, Los Angeles, CA 92011 Ph: (213) 585-5063 Fax: (213) 589-5443	Laidlaw Environmental Services 5295 S. Garvey Rd., Westmoreland, CA 92281 Ph: (619) 334-9400 Fax: (619) 344-9405
TSM Recovery and Recycling 3422 W. Pico Blvd., Los Angeles, CA 90019 Ph: (213) 735-9443 EPA: CAD108040858	Pacific Resource Recovery 3150 E. Pico Blvd., Los Angeles, CA 90023 Ph: (800) 499-7145 Fax: (213) 780-9940
Demenno Kerdoon Environmental Services 3650 E. 26th Street, Los Angeles, CA 90023 Ph: (213) 268-5056 Fax: (213) 268-9672 EPA: CAD080033681	U.S. Filter Recovery Services 5375 S. Boyle Ave., Vernon, CA 99058 Ph: (213) 277-1500 Fax: (213) 588-0094 EPA: CAD097030993

Prior to disposal, removed surface sediments will be inspected to determine the extent and type of chemical contamination. Evidence of oil and grease, antifreeze, solvents, fuel, hydrogen sulfide, and any other noxious substance will be noted. Observations will be used to determine if more than the standard analyte list is required. The standard analyte list (Table 5.3) is based on highway contaminants that have potential to exceed California Code of Regulations (CCR), Title 22 hazardous waste criteria. Methods used

to sample surface sediments are discussed in Section 5.7. While analytical results are pending, the removed surface sediments will be stored in 55-gallon drums or stockpiled onsite at a minimum distance of 100 feet from the basin and property boundary, in an area protected from vehicular traffic. Hay bales or silt barriers will be placed around the perimeter of stockpiles only, and stockpiles will be covered with plastic and stabilized with sandbags. Separate drums or stockpiles will be used to contain sediments suspected to be differently contaminated.

2.7 Hazardous Waste

Suspected hazardous wastes will be analyzed to determine disposal options. Hazardous waste generated onsite will be handled and disposed of according to applicable local, state, and federal regulations. A solid or liquid waste is considered a hazardous waste if it exceeds the criteria listed in the CCR, Title 22, Article 11 (State of California, 1985).

2.8 Checklist for Inspectors and Operation and Maintenance Personnel

Facility Inspection and Observational checklists or logs will be filled out during each visit to a BMP. These will be kept in a field logbook to ensure that the BMP is maintained at optimum levels throughout the monitoring period. The field logbook will also contain storm monitoring data sheets, and instrument calibration logs (Section 5.0). A separate logbook containing Facility Inspection Checklists and Maintenance Log Sheets will be kept. A separate logbook also will be kept for vector control and management logsheets (Appendix IV of Volume II).

Refer to Forms C through F (in Tabs 4 and 5 of the *FGN*) for checklists related to the inspection and maintenance requirements of a BMP.

3.0 VECTOR CONTROL AND MANAGEMENT

Constructing retrofit pilot BMPs will modify the existing stormwater drainage systems. Because such retrofitting may create opportunities for disease carrying organisms to flourish, insects (such as mosquitoes and midges) or rodents may have to be controlled. Vector control and abatement will be performed in accordance with Appendix IV and by subcontracted Vector Control Districts.

4.0 VEGETATION MANAGEMENT

The three main reasons for having a vegetation management program for an IB are:

1. Uncontrolled vegetation may affect the IB performance.
2. Maintaining vegetation is necessary to prevent the facility from becoming a public "eye sore".
3. Maintaining vegetation is key to controlling mosquito populations and other vector and nuisance organisms.

4.1 Management for Optimal BMP Performance

Maintenance and control of vegetation is essential to the optimal operation and performance of an IB. The IB will be seeded with low-growing grasses, which eliminates the need for irrigation and fertilization.

The condition of the vegetation will be inspected on a monthly basis at a minimum. These inspections will ensure that the IB vegetation is kept relatively short (approximately 12 in), that the vegetation protecting the slopes is kept healthy and continuous, and that undesirable plant species (e.g., woody vegetation) do not take root. Shorter vegetation on the basin floor will optimize the treatment capacity, the percolation rate, and will aid in vector control. Maintaining healthy and continuous vegetation on the slopes will minimize erosion. Preventing undesirable plant species from taking root will prevent plants with large root systems from damaging the embankments. See Section 2.0 for details on controlling vegetation.

4.2 Management for Optimal Vector Control

Dead vegetation that is inundated will create conditions favorable for the proliferation of vectors. Thatch that contains standing water during the slow percolation process into the basin floor will be attractive to egg-laying mosquitoes and will provide larvae with both food and protection from larvivorous predators. Thatch that accumulates during wet periods will dry out during the extended periods without rain in late spring through summer. Dried thatch is unlikely to aid infiltration upon reinundation and, due to the breakdown of dried material into small particles, may inhibit infiltration or decrease the performance lifetime of the design. Although, the rainy season in southern California (approximately December through March) tends not to overlap with peak activity for mosquitoes (April until November) and standing water may not present a serious vector problem after a winter storm event, the standing water resulting from vernal and autumnal rains could create a serious vector problem if water remains in the basin for 10-14 days. Isolated rain events during the summer would also be problematic; warmer temperatures would decrease the period for which standing water is a problem to

approximately 7-10 days. Upon reinundation, the bacterial degradation of the dried thatch will present conditions extremely attractive to vectors of encephalitides.
If vegetation such as cattails, bulrush, or willows develops within an IB, problems may occur with vector control. Controlling vegetation and standing water is preferred to enacting vector abatement programs (please refer to Appendix IV of Volume II for further information).

4.3 Maintenance Requirements

Mowing, trimming, and pruning are the preferred means for controlling vegetation at an IB. Controlling standing water will also be essential to controlling vegetation.

When equipment is used to remove vegetation, care will be taken to minimize ruts, holes, and an uneven IB floor. Such depressions can cause standing water that will create problems of vector control.

Additionally, the maintenance activities at the IB will be carried out in a fashion that minimizes soil compaction.

Maintenance activities that will be conducted on vegetation include:

- Weeding.
- Pruning.
- Replacement of dead or dying plants.

The vegetation seed mix has been designed so that fertilization and irrigation is not necessary. Fertilizers and irrigation will not be used to maintain the vegetation. If the vegetation does not survive without fertilization and irrigation, then Caltrans will work with the Plaintiff to discuss options for maintaining the BMP. Burning will not be allowed, and the use of herbicides will not be allowed because they can de-vegetate slopes and embankments for extended periods of time, and have detrimental effects to the quality of runoff treated at the facility.

Vegetation removed from an IB will be promptly hauled off and disposed of properly. Cut vegetation will not be stockpiled onsite, especially in the IB.

4.4 Checklists

During the routine vegetation inspections of the BMP Name Inspection Checklists (Form C in the *FGN*) will be completely filled out and signed by the inspector. These checklists incorporate the necessary vegetation inspection requirements. BMP Site Maintenance Activity Checklists (Form E in the *FGN*) will be filled out for maintenance activities performed.

5.0 SAMPLING AND MONITORING

This section details the monitoring equipment to be used at an IB, sampling protocols, and analytes to be tested.

5.1 Equipment Installation

This subsection details the monitoring equipment specific to the IB. Since runoff infiltrates through the basin floor, inflow and effluent quantity and quality will not be quantified. Instead, vadose zone water quality, soil quality, sediment deposition rates and quality, and infiltration rates will be monitored.

The depth of water inside the IB will be measured using a bubbler meter. Basin water depth data will be continuously logged with a data logger/controller. A staff gauge will be installed in each basin for calibration of the depth sensor. Basin water level changes will be used to estimate the percolation rate of the IB.

Bubbler tubing will be routed from the water level monitoring point to an equipment enclosure. The equipment enclosures will house the data logger/controller assemblies, cellular modem equipment, and batteries.

5.1.1 Rain Gauge

To measure rainfall, two approaches may be used. A rain gauge having a “tipping bucket” design that incorporates a small “bucket” which holds a known amount of rainfall may be used onsite. When the bucket is filled, it tips the water out, momentarily closes a switch, and then resets itself and starts the process again. The data logger/controller counts each switch closure to accumulate rainfall totals. The rain gauges used will tip after every 0.01 inch of rain.

The second approach is to use local area rain gauges to obtain rainfall data. The location and owner of the rain gauge nearest to the IB site can be obtained from the Los Angeles County Department of Public Works. Monthly rainfall reports issued by the 15th of each month can be obtained from the Los Angeles County Department of Public Works by contacting Mr. Joe Doughly at (626) 458-6123.

5.1.2 Power

The source of primary power for sampling systems will be 12-volt deep-cycle marine batteries.

5.1.3 Telecommunications

Cellular modem transceivers will be used to provide remote telecommunication access to the monitoring equipment. The ability to access a sampling station, monitor the status of the station in real-time, modify storm criteria, download new programs, and recover data allows for more cost effective, efficient monitoring.

A high performance base station antenna with filter will be installed; the filter will be installed from the lead-in of the antenna to prevent damage to the sampling station equipment due to nearby lightning strikes.

5.1.4 Equipment Enclosures

Fiberglass enclosures will be used to house the samplers and associated electronic equipment. These enclosures will be bolted to the concrete pads and will be locked to secure the monitoring equipment.

5.2 Maintenance and Calibration

A complete maintenance program will be performed at an IB after each large storm event during the monitoring period, or in the absence of rain, on a monthly basis. Maintenance will include checking the performance of the equipment, checking power supplies, cleaning contaminated equipment, and performing necessary equipment calibrations. Calibrations will be conducted in accordance to specifications in the individual component manuals.

Stormwater equipment maintenance visits will be thoroughly documented. Written documentation includes the action taken at a site as well as the date performed. Accurate and thorough records of station visits will be maintained to aid in the evaluation of an IB's performance. The log illustrated in Form F in Tab 5 of the *FGN* will be used to document maintenance and calibrations. If any program parameters are changed, the log shown on Form I in Tab 6 of the *FGN* will be completed.

5.3 Vadose Zone Monitoring

One of the monitoring elements at the IB consists of measuring dissolved metals (copper, lead, and zinc) concentrations in the vadose zone. Refer to Table 5.1, for analytical methods, reporting limits, holding times, preservatives, and container types and sizes. It consists of soil particles, pore spaces, and pore liquids that are held onto the surfaces of the particles. Pore liquids in the vadose zone are at pressures below atmospheric pressure and held in tension. Percolation of water through the vadose zone occurs when forces of gravity exceed tensional forces. At times, the soil pores may become entirely filled with water resulting in downward percolation of water, similar to that water percolating

through the IB. To remove pore liquids, a vacuum is used to pull them from the pores. Sampling liquid from the vadose zone requires the use of a porous sampling device and a vacuum.

5.3.1 Equipment Selection and Description

A lysimeter is a soil-pore liquid sampling device that is composed of two parts: (1) a body and (2) a porous filter membrane (refer to Figure 5.1). The porous filter membrane allows pore liquids to enter the lysimeter and collect before transferring a sample to the ground surface for collection and laboratory analysis. A lysimeter can be constructed from various materials including polyvinyl chloride (PVC), polyethylene, ceramic, or Teflon®. A variety of lysimeter materials were reviewed for suitability to this program's needs.

The selection of soil-pore liquid sampling equipment requires an understanding of the physical properties and construction details of a lysimeter and the chemical and physical properties of the constituents to be monitored. The ability of the porous membrane of the lysimeter to sample potential constituents is governed by the pore size of the filter membrane and the chemical inertness of the construction materials. Materials commonly used for the porous membrane of the lysimeter are ceramic and Teflon®. The body of a lysimeter is typically constructed of PVC or Teflon®.

Ceramic membranes adsorb several metals including copper, lead, and zinc, while major cations including calcium, sodium, potassium, and magnesium and carbon dioxide gas (CO_2) are desorbed. Additionally, the small pore size of ceramic membranes (approximately 3 to 5 microns) inhibits sampling many of the large molecular organic compounds, and increases the potential for clogging of the membrane with large molecular compounds and bacteria.

Lysimeters constructed of Teflon® are chemically inert and do not adsorb or desorb the constituents monitored for in this program. The pore sizes of Teflon® membranes typically range from 50 to 300 microns, which allow larger molecular compounds to enter the lysimeter and be sampled. A distinct disadvantage of the Teflon® membrane is the necessity of placing a silica flour pack around the exterior of the lysimeter to reduce pore clogging and to enhance the vacuum of the lysimeter in low-soil moisture, high-soil tension environments.

The monitoring requirements for this program include analysis of dissolved copper, lead, and zinc. Based on these constituents, Teflon® was selected as the porous filter membrane because of its larger pore sizes and chemical inertness. In addition, it is recommended that a Teflon® body and Teflon® tubing be used where pore liquids will contact the equipment. This use of Teflon® will reduce the adsorption or desorption of constituents.

Three types of lysimeters are available based on the position of the porous filter. These are the tube-type, cup-type, and casing-type lysimeters. A tube-type lysimeter was selected because the porous filter is situated above the fluid collection chamber. When applying a vacuum to the system to force the liquids to the surface, the liquids will not be forced through the porous filter. This will prevent over-concentrating the sample and losing the sample back into the formation. The collection chamber can hold approximately 400 milliliters (mL) of pore liquid before requiring extraction to the surface. An additional aspect to using an all-Teflon® body is that there is no "dead space" in the sample collection area where liquids may remain and be over-concentrated by continued sampling. A PVC lysimeter body and ceramic membrane can produce between 35 and 80 mL of "dead space" storage.

5.3.2 Lysimeter Preparation, Borehole Preparation, and Lysimeter Installation

Installation of the lysimeter will be in accordance with the manufacturer's recommendations. The following sections describe lysimeter preparation, borehole preparation, and lysimeter installation procedures.

Lysimeter Preparation

Before the lysimeter has been installed, it will be vacuum tested to ensure that there is no air leakage. The procedures that will be used are described below. The manufacturer will ship the lysimeter with a latex or flexible plastic membrane around the porous membrane. Rubber bands will be placed over the membrane overlaps to maintain a seal. The lysimeter stopcocks and/or clamps will be closed. A vacuum pump will be connected to the vacuum/pressure tube and a vacuum in excess of 10 psi (508 mm of mercury [Hg]) will be applied. The vacuum reading on the gauge will be monitored and noted. The system will be left in this state for 3 hours. A drop of up to 1.5 psi (76 mm of Hg) over this time is acceptable. If a larger drop occurs, the connections will be re-tightened and the lysimeter will be re-tested.

After the lysimeter has passed this vacuum test, the lysimeter will be placed in distilled water and a vacuum of approximately 7.5 psi (380 mm of Hg) applied for about one hour. This procedure pre-wets surfaces of the porous membrane, and removes entrained air in the porous membrane. The distilled water will be removed from the lysimeter before it is installed in the field by using the following protocol.

1. Fit a clean rigid polyethylene sample container (400 mL minimum volume) with a two-port bung to the sample collection tube, making a sealed system (refer to Figure 5.2). The tube from the lysimeter will protrude into the sample container approximately one-half inch (13 mm). The other tube to the vacuum/pressure pump will be flush with the bung.

2. Ensure that the vacuum/pressure tube and sample collection tube stopcocks are in the open position.
3. Evacuate the sample from the lysimeter by applying a vacuum of approximately 10 psi (508 mm of Hg).
4. Close the sample tube stopcock and apply a vacuum of 10 psi (508 mm of Hg) to the vacuum/pressure tube and then close the vacuum tube stopcock. The lysimeter is now ready to be installed in the field.

Borehole Preparation

The borehole for the lysimeter will be excavated after the IB is fully excavated. The borehole will be excavated to provide adequate space for the lysimeter body to be surrounded by a silica flour pack. A two-inch diameter (51 mm) lysimeter will be used and requires a six-inch (150mm) or larger diameter borehole. This diameter will allow for at least 1.5 inches (38 mm) of silica flour pack to fill the annular space between the filter membrane and the walls of the borehole. The borehole will be excavated to a depth of approximately 7.00 ft (2.13 m) below the IB floor (Figure 5.3). If difficulties are encountered in maintaining an open borehole, casing will be used to temporarily hold back the soil during lysimeter installation.

Lysimeter Installation

Crystalline silica flour and distilled water will be mixed at a ratio of 150 mL of water to 450 grams of silica flour. Approximately 50 pounds of silica flour will be mixed with 2 gallons of distilled water to make enough slurry for a single lysimeter installation in a six-inch (150 mm) borehole. The slurry will be mixed by adding the silica flour slowly to the distilled water under constant stirring. The mix will be completely blended to contain no lumps.

When the slurry is completely mixed, a portion will be poured into the borehole providing a bed for the lysimeter to be placed on. This bed will be poured to an approximately thickness of 0.10 ft (30 mm) (refer to Figure 5.3). After the bed is poured, a plug will be threaded onto the lysimeter so that PVC casing can be used to lower and support the lysimeter in the center of the borehole.

The PVC casing will extend to an elevation higher than that of the embankment of the IB and will contain the vacuum/pressure and sample tubing. No PVC glue will be used to join PVC casing sections. A minimum of at least 1.5-inch (38 mm) of silica slurry will be placed in the annular space around the lysimeter. Slurry will also be poured into the annular space of the borehole to completely surround and cover the lysimeter body.

After the slurry has set for at least two hours, a bentonite seal will be installed in the annular space of the borehole from the top of the silica flour pack to the bottom of the IB.

The lysimeter head assembly will be installed on the PVC casing and the vacuum/pressure and sample collection tubing will be connected to the appropriate ports. A locking metal cap will be installed over the lysimeter head assembly by anchoring cap to the concrete seal, as shown in Figure 5.3.

5.3.3 Vadose Zone Sample Collection

Because it is not initially known how quickly the water will pass through the soil at the District 7 IB site, a performance test of the lysimeter will be conducted before the required December and January monitoring events. The performance test will take place providing the lysimeter has been installed and a storm event of at least 0.10-inch of rainfall occurs within a 24-hour period. The test will determine how long after a storm event sample collection will be attempted, and also will determine whether the lysimeter functions properly in this type of soil. During this pre-required monitoring event, sample collection will be attempted within 4 to 6 hours after the storm event and every two hours thereafter until a sample is obtained or a 24-hour period has passed. If sample collection is successful, no additional performance testing will be done, and sample collection in December and January will be attempted within the time period determined during the pre-required monitoring event. Samples from this pre-required monitoring event will only be sent to the laboratory for analysis if so directed by Caltrans. If sample collection is unsuccessful, Caltrans will be informed and a plan-of-action will be developed for future attempts to monitor pore water in the vadose zone.

Samples of pore liquid will be collected by applying a vacuum. The following protocol will be used to collect pore liquid samples using the lysimeter:

1. Place the lysimeter in the sample extraction mode by closing the sample collection stopcock.
2. Connect a 12-volt electric vacuum pump to the vacuum/pressure port. Slowly regulate the vacuum to 10 psi (508 mm of Hg) by adjusting the pressure vacuum stopcock on the lysimeter head assembly and the seal the system.
3. Once the vacuum is generated, pore liquid will be drawn from the soil pores and into the lysimeter. When the vacuum drops to 5 psi (254 mm of Hg) or less, attempt sample recovery.
4. Fit a clean, rigid, polyethylene sample container (400 mL minimum volume) with a two-port bung to the sample collection tube, making a sealed system (refer to Figure 5.2). The tube from the lysimeter will protrude into the sample container approximately one-half inch (13 mm). The tube to the vacuum/pressure pump will be flush with the bung.
5. Ensure that the vacuum/pressure tube and sample collection tube stopcocks are in the open position.
6. Evacuate the sample from the lysimeter by applying a vacuum of approximately 10 psi (508 mm of Hg).

7. A minimum volume of 100 mL (300 mL is recommended) is required for the analysis of dissolved copper, lead, and zinc. Transfer the sample to an unpreserved polyethylene bottle provided by the laboratory. If the required volume was not obtained, repeat Steps 1 through 6.
8. When the minimum volume of sample has been obtained, properly pack and transport the sample in accordance with the procedures described in Section 5.10. Ensure that a note has been recorded on the Chain-of-Custody Form requiring the laboratory to filter the sample upon receipt.
9. In accordance with the manufacturer's recommendations, lysimeter equipment decontamination is not necessary.

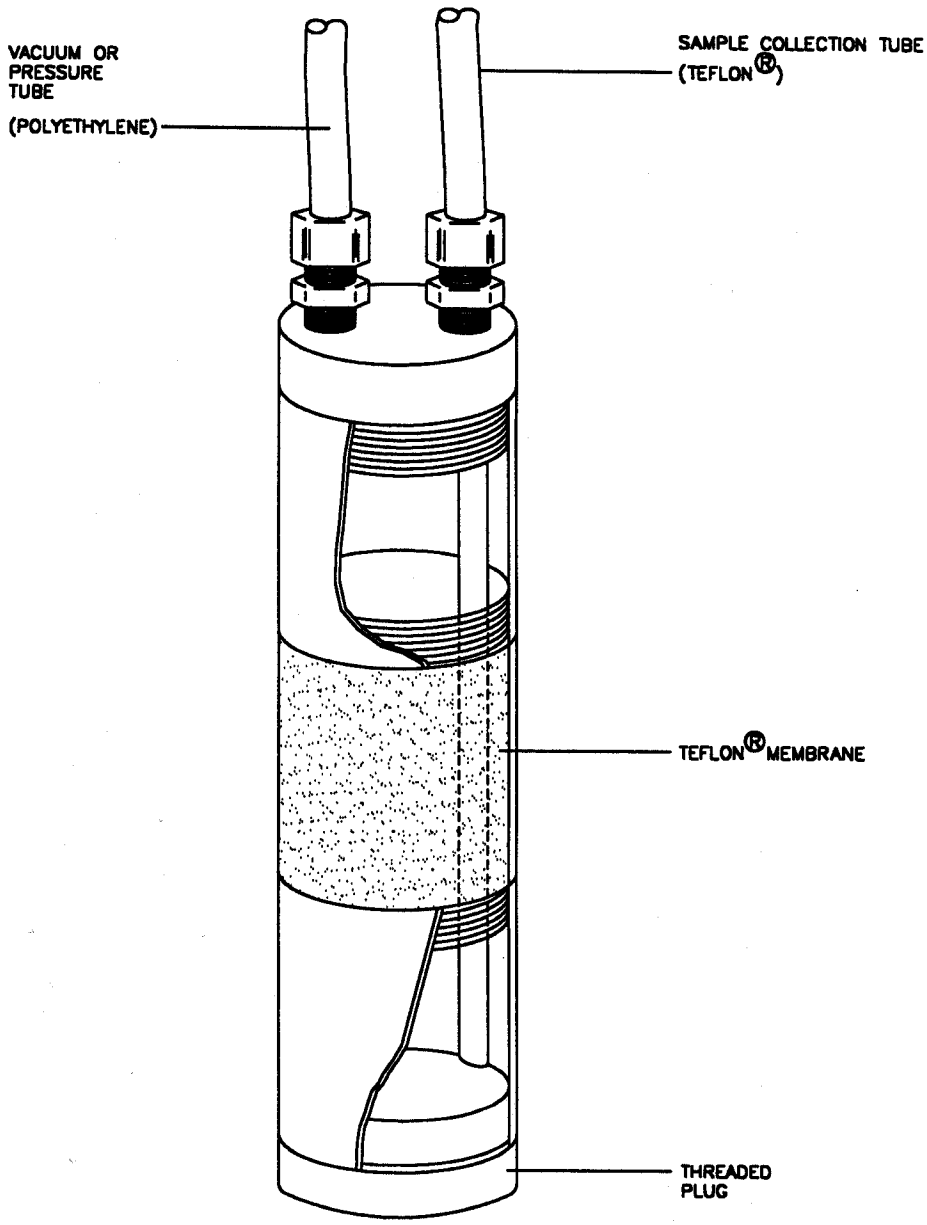

NOT TO SCALE

Prepared By: EDP
Checked By:

CALTRANS
DISTRICT 7
BMP PILOT PROGRAM

FIGURE: 5.1

LAW Crandall
LAWGIBB Group Member
A Division of Law Engineering and Environmental Services, Inc.

LYSIMETER DETAIL

CONTRACT 43A0002C, TASK ORDER 6

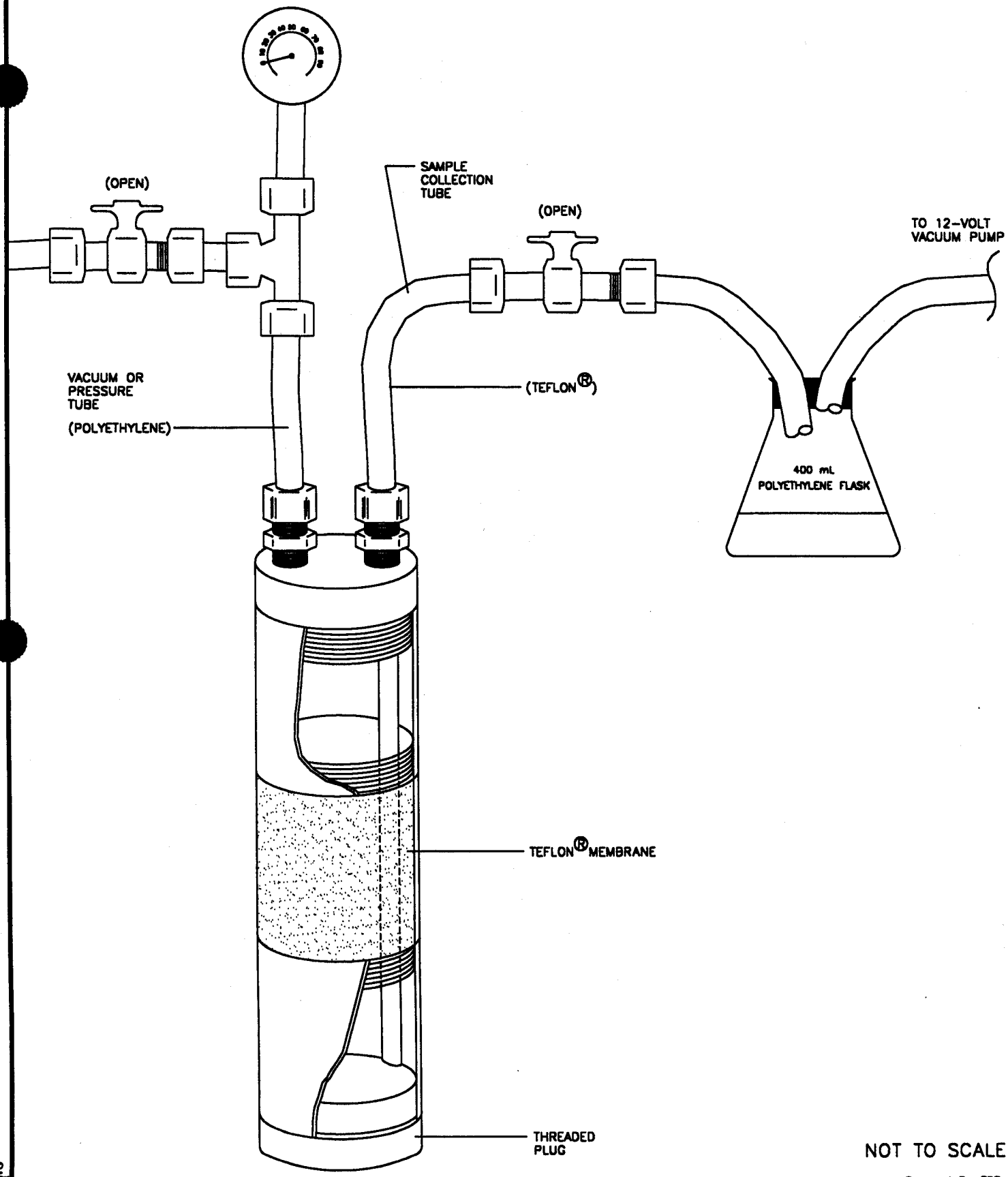

NOT TO SCALE

Prepared By: EDP
Checked By:

CALTRANS
DISTRICT 7
BMP PILOT PROGRAM

FIGURE: 5.2

LAW Crandall
LAWGIBB Group Member
A Division of Law Engineering and Environmental Services, Inc.

SAMPLE COLLECTION CONFIGURATION

CONTRACT 43A0002C, TASK ORDER 6

D:\70300\80111\

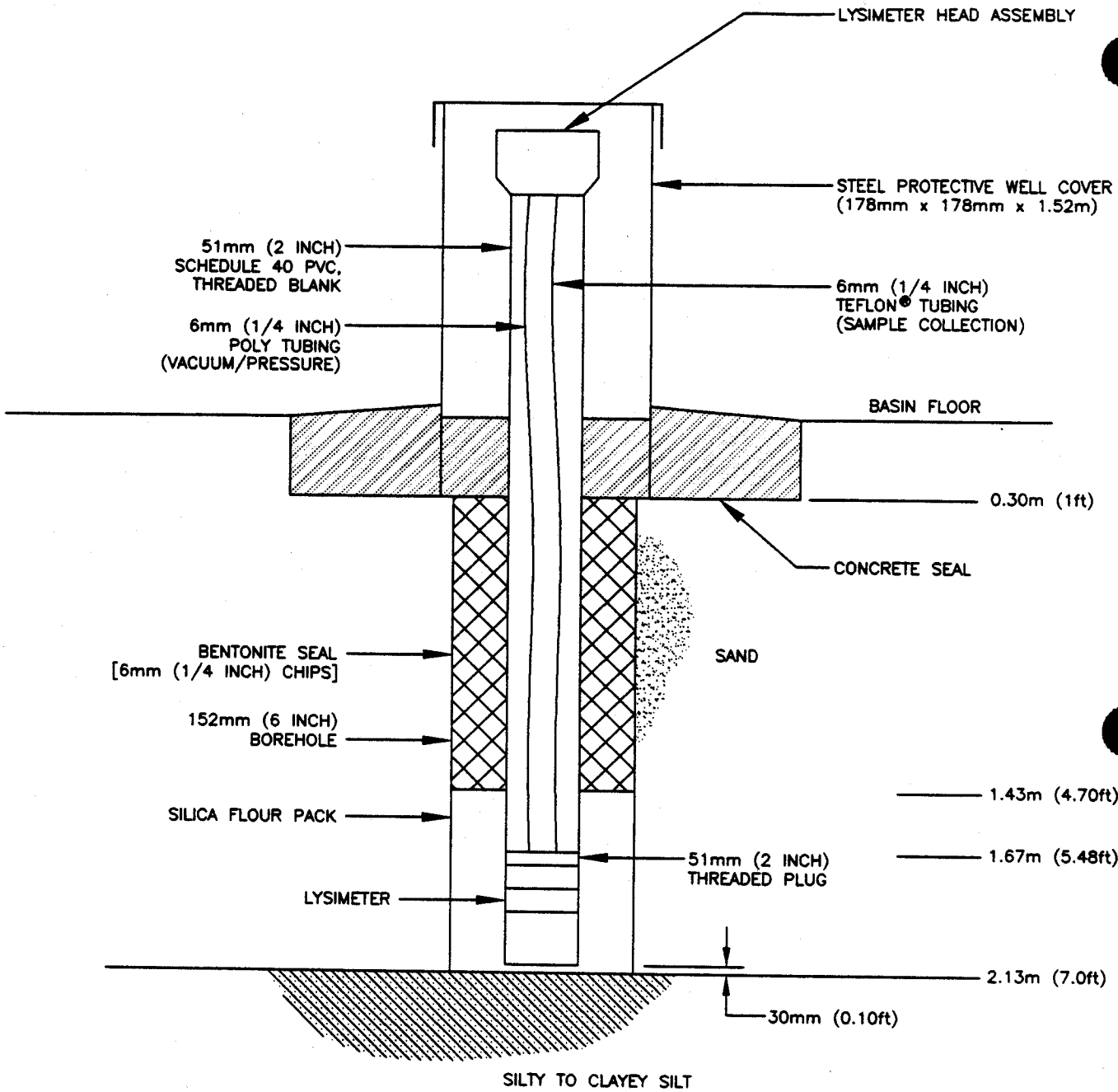

NOT TO SCALE

Prepared By: EDP
Checked By:

CALTRANS DISTRICT 7 BMP PILOT PROGRAM FIGURE: 5.3	LAW Crandall LAWGIBB Group Member A Division of Law Engineering and Environmental Services, Inc.	OBSERVATION WELL CONSTRUCTION CONTRACT 43A0002C, TASK ORDER 6

5.4 Weather Tracking

Observations of the IB performance will be conducted four times during the 1998/1999 storm season and four times during the 1999/2000 storm season. For this reason, careful tracking of the weather must be conducted. Weather tracking will be the responsibility of the Task Order Manager and Storm Control personnel. During the wet weather season, the weather will be continually monitored with increased frequency as incoming systems are predicted.

Sources of weather information to be used to track incoming storms include the National Weather Service, Weather Watch Service, Weather Network (WeatherNet), public broadcast information available on the Weather Channel and local news stations, and radar and satellite images downloaded from the Internet (e.g., www.weather.com).

5.5 Storm Mobilization and Staffing

A staffing plan will be developed as soon as a potential storm event is forecast. Crews will consist of two individuals. The staffing plan will include the following information:

- Personnel needed for each position.
    - Storm Control
    - Shift Leader
    - Crew Chiefs
    - Crew Assistants
- Shift and zone (pilot facilities manned by a single crew) designations.
- Equipment mobilization.
- Communication channels.

5.5.1 Storm Monitoring Equipment

Equipment needed for stormwater observations includes safety equipment, personal rain gear, Storm Kits, and vehicles equipped with some type of mobile communication, and highway safety equipment (see lists). The necessary equipment will be loaded into the appropriate vehicles early in the storm preparation sequence.

Storm Kit Equipment List

- Keypad/display
- 9-pin cable from keypad to data logger
- Full set of keys (on floatable bobber)
- Flashlights (2)
- Maps for required areas
- Large flat screwdriver
- Small flat screwdriver
- Umbrella
- High quality alkaline D-cell batteries
- Spare sample labels
- Pencils and indelible markers
- Desiccant (for bubbler)
- Diagonal clipper
- Electrical tape
- Cable ties (assorted sizes)
- Utility knife
- Ziplock baggies (assorted sizes)
- Labeling tape
- Powder-free nitrile gloves
- Rubber bands

Storm Mobilization List

- Storm Kit
- Log books
- Paper towels
- Extra fine indelible markers
- Two-way radio or cellular phone
- Personal rain gear
- Any necessary safety gear

5.5.2 Communication Channels

Communication channels will be established for personnel to contact each other before and during a storm event. A telephone tree will be used to facilitate contacting field personnel and other key individuals. Phone lists with home and work numbers and other key contacts will be made available to potential crew members. Two-way radio or cellular telephone communication links to field crews are essential for efficient monitoring.

5.6 Soil and Sediment Sampling for BMP Performance Evaluation

Core soil and surface sediment samples will be collected from within the IB and will be used in part to evaluate the BMP's performance. A baseline set of nine core soil samples will be collected from within the IB following completion of its construction. Annual sampling of core soil and surface sediment will be performed at the same locations following the end of the 1999/2000 and 2000/2001 wet seasons. Samples will be analyzed for constituents listed in Table 5.2. In addition, surface sediment accumulation rate within the IB and surface sediment grain size distribution will be determined by making measurements at the end of each wet season.

Nine cores will be collected from locations on an equilateral basin grid (superimposed over the basin) to quantify annual sediment accumulation and quality data. If the presence of materials such as boulders, debris, etc. hinders the application of this process or if there is a lack of sediment, the cores will be collected as close as possible to the selected point. Each of the nine cores will be collected using a hand-held, stainless steel soil probe, or equivalent. The cores will be driven 1 m [3.28 ft] below the sediment

surface and recovered. Using the log shown in Form H2 in Tab 6 of the *FGN*, soil borings will be logged for depth of penetration and recovery, location, and geotechnical characteristics. Each core will then be subdivided into three sections as follows:

1. Section 1 is from the sediment surface to the surface of the native soils.
2. Section 2 is from 0.3 m [0.98 ft] to 0.5 m [1.64 ft] below the surface of the native soils
3. Section 3 is from 0.6 m [1.97 ft] to 0.8 m [2.62 ft] below the surface of the native soils.

Use the following steps in collecting sediment and soil samples:

1. Don personal protective equipment.
2. Locate the sample locations within the IB.
3. Using a transit, determine the sediment surface elevation from a referenced benchmark on the IB embankment.
4. Collect the core samples at the nine locations using a soil probe or equivalent. Ensure that the sample is collected to a depth of 1 m [3.28 ft] below the original IB floor elevation and in the correct location. Record the sediment depth at each location. Discard soil below the bottom sample interval (i.e., soil below 1 m [3.28 ft] from the IB floor).
5. Record sample characteristics, and subdivide each core into three sections as described above.
6. Deposit each selection of each core into stainless steel mixing bowls.
7. Homogenize the sample in each bowl.
8. Fill four 8-ounce glass jars and close the containers with the caps. One jar will be labeled and analyzed for Total Recoverable Petroleum Hydrocarbons (TRPH); one jar will be labeled and analyzed for metals; the remaining two jars will be combined in the laboratory and analyzed for grain size.
9. Wipe the outside of each sample container with a clean paper towel.
10. Record initials, date, and time on the pre-labeled sample bottle.
11. Place the sample containers in individual zip-top plastic bags and seal the bags.
12. Immediately pack the samples into a chilled cooler.
13. Record the required information on the Chain-of-Custody Form (Form M in Tab 7 of the *FGN*).
14. Document the sampling event, recording information in the designated field logbook.

5.7 Sediment Sampling and Testing for Disposal Purposes

As part of the maintenance program, sediment will be removed from the BMP when flows are hydraulically impeded. It is anticipated that sediment will accumulate relatively slowly over time. However, should sediment deposit in a rapid manner, an intermediate step of stockpiling may become necessary before offsite disposal.

Section 5.7.1 provides procedures to be used when assessing potential sediment contamination in the event that intermediate onsite storage is necessary.
This subsection describes the sample collection procedures and analyses for assessing the quality of surface sediment removed from an IB for disposal. Evidence of oil and grease, antifreeze, solvents, fuel, hydrogen sulfide, and any other noxious substance will be noted. Observations will be used to determine if more than the standard list of analytes is required. Observations will be documented on a checklist form (Form G in Tab 5 of the *FGN*). The standard list (Table 5.3) is based on highway contaminants that have the potential to exceed hazardous waste criteria. After laboratory analysis, results will be compared to regulatory limits listed in California Code of Regulations (CCR) Title 22, Section 66261.24 and Department of Toxic Substances Control (DTSC) variances. Based on this evaluation, proper disposal methods will be chosen.

5.7.1 Sediment Collection

Procedures in EPA Publication *Test Methods for Evaluating Solid Waste, Physical/Chemical Methods (SW-846)* provide a method for determining the mean concentration of a given contaminant within a soil mass and the appropriate number of samples necessary to calculate this mean to the specified confidence interval. Initial sampling will generate a minimum number of samples/analyses as described below. Additional sample analyses may be required to meet the confidence levels given in *SW-846*, therefore archiving of samples will be necessary. Archived samples will be appropriately preserved and analyzed within the maximum holding time specified in Table 5.3. None of the samples will be allowed to be composited. The Quality Assurance/Quality Control (Appendix III) describes the QA/QC objectives for surface sediment samples. The minimum number of discrete samples initially required is given below. The log shown as Form G in Tab 5 of the FGN will be used to document sediment collection.

- Drums: A minimum of one sample will be collected from each drum.
- Stockpiles less than 10 cubic yards: A minimum of two samples will be collected, one from each half of the stockpile. Sampling points will be selected randomly within each half.
- Stockpiles from 10-20 cubic yards: A minimum of three samples will be collected, one from each third of the stockpile. Sampling points will be selected randomly within each third.
- Stockpiles from 20-100 cubic yards: A minimum of four samples will be collected, one from each quarter of the stockpile. Sampling points will be selected randomly within each quarter.

- Stockpiles from 100-500 cubic yards: A minimum of one sample for each 25 cubic yard portion will be collected. The stockpile will be sectioned into 25 cubic yard portions to obtain a minimum of one sample for each 25 cubic yard portion. Sampling points will be selected randomly within each 25 cubic yard portion of the stockpile.

Random samples will be selected from locations on a three-dimensional grid. If the presence of materials such as boulders, debris, etc. hinder this process, the sample will be collected as close as possible to the randomly selected point without altering the essence of the random selection process. The following steps will be used to collect surface sediment samples:

1. Don personal protective equipment.
2. Locate the sample point in the stockpile or drum.
3. Collect the sample using a soil probe or equivalent. Ensure that the sample is collected at the correct depth and location that was randomly selected.
4. Fill one 8-ounce glass jar with a portion of the sample and close the container with the cap, using care not to aerate (volatilize) the sample. This jar will be labeled and analyzed for TRPH and VOCs.
5. Homogenize the other portion of the sample in a disposable bowl using a disposable spatula or spoon. Fill a second 8-ounce glass jar with this portion of the sample and close the container with the cap. This sample will be labeled and analyzed for metals.
6. Wipe the outside of each sample container with a clean paper towel.
7. Record the sampler's initials, date, and time on the pre-labeled sample bottle.
8. Place the sample containers in individual zip-top plastic bags and seal the bags.
9. Immediately pack the samples into a chilled cooler.
10. Record the required information on the Chain-of-Custody Form.
11. Document the sampling event, recording information in the designated field logbook.
12. Repeat the above steps until the minimum number of samples has been collected.

5.7.2 Sediment Analyses

Unless observations indicate additional testing, the surface sediment samples submitted to the laboratory will be analyzed for analytes listed in Table 5.3 using Title 22 criteria (State of California, 1985). This table also lists the required reporting limits, analytical holding times, required preservation, and container sizes and types. Laboratory turn around times and data deliverables will be same as those for soil and vadose zone samples.

5.8 Documentation

Upon each site visit, whether during a storm or not, records of the visit will be accurately recorded on the field log form (Form I in Tab 6 of the *FGN*). Whenever possible, any

data being recorded by the system (e.g., basin level) will be verified. If any program parameters are changed, the log shown as Form J in Tab 6 of the *FGN* will be completed. Also, once during each storm event visit the Empirical Observation Checklist will be completed (Form H1 in the *FGN*).

5.8.1 General Visitation Data

During each station visit, several data logger display locations will be recorded. The log sheets will be used as a guide for the proper display locations to record. The following data will be recorded at the IB facility:

- Data Logger Stage
- Staff Gauge Stage
- Station ID
- Data Logger Battery Voltage
- Bubbler Level Meter Battery Voltage
- Cellular Equipment Battery Voltage

5.8.2 Storm Visitation Data

Additional data will be recorded in the logbook during storm monitoring. The log sheet will be used to determine the necessary information. The following is a summary of this data:

- Total Rain (inches)
  This cumulative data is updated each time the rain bucket tips.
- Max Stage (feet)
  This indicates the height of the maximum basin level during the current storm.
- Basin Water Level (ft)
  Instantaneous water level within the IB.
- 15 min. Change in Basin Water Level (ft)
  This indicates the change in basin water level during the previous 15-minute period. Positive means increase and negative means decrease.
- Previous 1-Hour Infiltration Rate (cf/hour)
  Estimated rate of infiltration based on decrease in basin level. Only valid during periods of no rain.

After datalogger data has been recorded, the system will be placed in low power mode (*0) and the keyboard unplugged.

5.9 Sample Tracking and Handling

Samples, regardless of their matrix, will be kept properly chilled and transferred to the analytical laboratory within holding times to achieve the highest quality data possible. To ensure proper tracking and handling of the samples, documentation will accompany the samples from the initial pickup to the final extractions and analysis. This documentation includes the Chain-of-Custody Form (see Form M in Tab 7 of the *FGN*). These forms or equivalent will be used to track and handle samples.

Collected samples will be labeled with the following information:

- Project name.
- Date.
- Time.
- IB name and number.
- Sampling location.
- Preservative.
- Collector's initials.
- Sample I.D. number.
- Analyte(s) to be analyzed.
- Grab or composite sample

Duplicate and QA/QC samples will be collected for media sampled, where possible. Duplicate and QA/QC samples will be prepared from the volume of the sample collected. The crews collecting the samples will be fully briefed on the procedures for collecting QA/QC samples, and will be familiar with the sample identification numbering scheme for these samples because they are to be submitted to the laboratory as blind samples. These samples will be labeled, recorded on the Chain-of-Custody Form, and transported to the analytical laboratory.

Each sample collected will receive a unique alphanumeric code (sample I.D. number) for tracking. This code will be standard for samples and contain information as to the station, date, and sequential monitoring event number. The following is an example of this code:

SITE No.-IN-32898-001

Where:

Site No. = Site number of BMP site.
IN = Influent sampling point at the site; EF = effluent sampling point, W = within
32898 = Julian day and year
001= First storm event monitored during this program at this location

If multiple bottles are used or needed, the last data field will indicate the bottle number and the total bottles in that sampling event (i.e., 001-1/3, 001-2/3, 001-3/3 for a three-bottle collection scheme).
A set of QA/QC samples will be provided with each type of sample. The analytical laboratory may also require additional QA/QC samples if one type of analysis is to be run in more than one batch.

Duplicate and QA/QC samples will be analyzed for the same standard analytes as the field samples. Most field QA/QC samples are submitted blind to the analytical laboratory, however, additional sample volumes provided to the laboratory for laboratory replicates or matrix spikes and matrix spike duplicates will be clearly identified. The main types of QA/QC samples that will be utilized for this study are as follows:

Duplicate Analyses - These analyses will be performed on one sample each monitoring year and will require an additional set of sample containers. Duplicate samples will be analyzed for the full list of analytes. The results will allow evaluation of sampling error introduced by both field sampling and laboratory analyses by showing the reproducibility of the sample collection and analyses. Duplicate samples will be sent “blind” to the laboratories.

Duplicate samples will be identified by adding 500 to the sequential storm event number. For example, a duplicate sample for the site identified above will be:

SITE No.-IN-32898-501

Blanks - These are for field as well as laboratory samples. Blanks help verify that the equipment and the sample containers are not contaminated, and the sampling techniques used are non-contaminating. Core soil and surface sediment collection equipment will be rinsed with reagent grade analyte free deionized water separately. The collected rinsates will be analyzed for the full list of analytes for the primary samples. Blanks will also be run on the analytical equipment. Each time a batch of composite bottles is cleaned, five percent of those bottles will be blanked. Each time a batch of filters is purchased five percent of those filters will be blanked.

Equipment rinsate blanks will be identified by adding 600 to the sequential storm event number. For example, an equipment rinsate blank collected from the monitoring equipment from the site identified above will be:

SITE No.-IN-32898-601

Field blanks will be identified by adding 700 to the sequential storm event number. For example, a field blank collected at the site identified above will be:

SITE No.-IN-32898-701

Matrix Spike and Matrix Duplicate Spike (MS/MSD) - The laboratory will require additional sample volumes for analyses that require matrix spikes and matrix spike duplicates to evaluate precision and accuracy of the laboratory analytical method, and to evaluate any matrix interference. MS/MSDs are analyzed for their analyte(s) and then spiked with a known amount of analyte(s). One MS/MSD sample will be run on metal samples collected during each event sampled, if enough sample volume has been collected.

MS/MSD samples will be indicated on Chain-of-Custody Forms by clearly identifying that the sample is for MS/MSD purposes.

5.10 Decontamination Procedures

Sampling equipment will be decontaminated according to the following procedures:

1. Rinse three times with a 2% Micro® solution or equivalent. Wash the other equipment with 2% Micro® solution and a clean plastic brush.
2. Rinse three times with warm tap water.
3. Rinse three times with Milli-Q or equivalent water.
4. Rinse three times with 2N nitric acid.
5. Soak at least 24-hours in 2N nitric acid.
6. Rinse three times with Milli-Q water.

5.11 Laboratory Selection, Sample Container Preparation, and Analytical Methods

5.11.1 Laboratory Selection

The selected laboratories have extensive experience with environmental samples and have the ability to provide rapid response to meet critical holding time requirements for analytes requiring expeditious analysis. Laboratories are certified by the California

Department of Health Services for the requested analyses. Refer to Tab 2 in the *FGN* for specific laboratory listings.

5.11.2 Holding Times, Sample Bottles, and Preparation

The laboratories will be responsible for providing appropriate sample containers and, when necessary, with preservatives for each analysis. Tables 5.1, 5.2, and 5.3 provide a summary of sample volumes required for each analysis, along with the types of containers, holding times, and preservative. Because additional volumes are necessary for laboratory QA/QC, sample containers will provide at least twice the volume necessary to perform the requested analysis. Also listed in Tables 5.1, 5.2, and 5.3 are the analytical methods and reporting limits.

5.11.3 Project Reporting Limits

Recommended analytical methods and reporting limits for this project are listed in Tables 5.1, 5.2, and 5.3. The reporting limits in this table are target reporting limits. In some cases, reporting limits may need to be adjusted due to limited sample volumes or potential matrix interference. In such cases, appropriate data qualifiers will be applied to the associated data.

5.11.4 Laboratory Data Package Deliverables

Laboratories will be required to provide a three-week turnaround on deliverables. The deliverable package will include a hard copy and electronic data files. The hard copy will include standard narratives identifying any analytical or QA/QC problems and corrective actions. The electronic data files will contain information found in the hard copy reports submitted by the laboratories. Individual data sets will be submitted as either Microsoft Excel® Workbook files or as Microsoft Access® database files. Each consultant will be responsible for laboratory coordination and data management. Data management will be consistent with "Caltrans Data Management Plan – Data Reporting Protocol and Database," Doc. I.D. CTSW-98-005.

Table 5.1
Vadose Zone Matrix
Analytical Parameters, Methodologies, Reporting Limits, Holding Times, Container Volumes and Types, and Preservation

Analyte	Priority Rank	Reporting Limit	Units	Analytical Technique	Method Number	Holding Time	Preferred Volume and Container Type(1)	Preservation
Dissolved Metals(2)								
Copper	1	1	µg/L	ICP-MS	EPA 200.8	6 months	1-100 mL plastic	4°C and HNO_3 to pH<2 and filter
Lead	1	1	µg/L	ICP-MS	EPA 200.8	6 months	1-100 mL plastic	4°C and HNO_3 to pH<2 and filter
Zinc	1	1	µg/L	ICP-MS	EPA 200.8	6 months	1-100 mL plastic	4°C and HNO_3 to pH<2 and filter

1. Analytes with the same preservative can be combined into a single container, if the same laboratory is performing the analyses.
2. Dissolved metals will be filtered in the laboratory prior to acidification.

Table 5.2
Soil and Sediment Matrix for BMP Performance Evaluation
Analytical Parameters, Methodologies, Reporting Limits, Holding Times, Container Volumes and Types, and Preservation

Parameter	Method	Units	Reporting Limit	Maximum Holding Time	Preservation	Container Size/Type (1)
Total Recoverable Petroleum Hydrocarbons (TRPH)	418.1 (IR)/ 1664HEM	mg/kg	10	28 days	4°C	8-oz glass jar
Total Metals(3): - Copper - Lead - Zinc	6020	mg/kg	 2.5 0.3 2.0	180 days	4°C	8-oz glass jar
Grain Size Distribution: (Method of Tests for Sieve Analysis of Fine and Course Aggregates)	Caltrans Test 202	---	---	---	---	2 8-oz glass jars (500 ± 25 grams)

1. Each sample will be collected in four 8-oz glass jars

Table 5.3
Sediment Matrix (Disposal)
Analytical Parameters, Methodologies, Reporting Limits, Holding Times, Container Volumes and Types, and Preservation

Parameter	Method	Units	Reporting Limit	Maximum Holding Time	Preservation	Container Size/Type (1)
Total Recoverable Petroleum Hydrocarbons (TRPH)	EPA 418.1	mg/kg	10	28 days	$4^{o}C$	8 oz glass jar
Volatile Organic Compounds	EPA 8260B	mg/kg	SW – 846 (5) requirements	14 days	$4^{o}C$	8 oz glass jar
California Code of Regulations (CCR), Title 22 Metals(2):	EPA 6020/7471	mg/kg	SW – 846 (5) requirements	180 days 28 days for mercury	$4^{o}C$	8 oz glass jar
California Code of Regulations (CCR), Title 22 Waste Extraction Test (WET) Metals(3):	STLC Extraction	mg/L	SW – 846 (5) requirements	180 days 28 days for mercury	4° C	NA
Toxicity Characteristic Leaching Procedure (TCLP) Metals(4):	TCLP 1311	mg/L	SW – 846 (5) requirements	180 days 28 days for mercury	4° C	NA

(1) Each sample will be collected in two 8 oz glass jars

(2) California Code of Regulation (CCR), Title 22 Metals (Sb, As, Ba, Be, Cd, Cr (total), Co, Cu, Hg, Pb, Mo, Ni, Se, Ag, Tl, V, and Zn). Initial waste characterization results may lead to a shorter list of metals for subsequent sediment disposal.

(3) Any sample for total metals that are below the Total Threshold Limit Concentration [TTLC] but exceed the ten times Soluble Threshold Limit Concentration (STLC) will be further analyzed using the WET procedure. WET extracts will be analyzed only for metals which exceed the ten times STLC criteria. Sediments associated with total metal results that exceed TTLC values are automatically considered hazardous and therefore do not need to undergo the WET procedure.

(4) If any of the WET-soluble concentrations are equal to or greater than the TCLP regulatory thresholds, analyze the waste by TCLP.

(5) "Test Methods for Evaluating Solid Waste, Physical /Chemical Methods". SW-846, Update III.(SW-846)

5.12 Empirical Observations

5.12.1 Purpose of Empirical Observations

Performance assessments of BMP facilities cannot be fully ascertained through analytical methods. "Empirical" observations are also critical in determining the overall performance of implemented water quality management practices and in ensuring that the practices are maintained at optimum levels. Other factors such as maintenance activities, environmental variability, and physical processes, which cannot be determined analytically, can greatly influence the performance of a particular BMP. Some of these factors such as rainfall quantity, rainfall intensity, and infiltration rate can, and, will be assessed through physical measurements. Other components such as trash build-up, surface sediment deposition, and runoff appearance can be best assessed through careful documented observations.

5.12.2 Guidelines

Observations will be succinct but also complete. For an IB performance evaluation, the following observations will be taken at the influent location, within the IB, and within the basin:

- Meteorological characteristics (present and preceding period).
- Hydrologic and hydraulic characteristics (flowing and/or standing water).
- Inlet conditions (problems affecting performance).
- Water quality appearance (visual, olfactory).
- Solids deposition (trash and debris, sediments, organics) and resuspension.
- Erosion.
- Vegetation condition.
- Infiltration surface condition (signs of potential clogging).
- Mosquitoes and other vectors.
- Structural condition of facility.
- Monitoring equipment condition.

5.12.3 Checklist for Sampling and Monitoring Personnel

Form H1 in the *FGN* provides a checklist (log form) that will be completed by sampling and monitoring personnel during each storm event visit to the facility.

6.0 REFERENCES

Larry Walker and Associates. 1997. Guidance Manual: Stormwater Monitoring Protocols. Prepared for California Department of Transportation, Sacramento, CA. August 15, 1997.

Robert Bein, William Frost and Associates. 1997. Scoping Study, Retrofit Pilot Program, Caltrans District 7. Calif. Dept. Trans., Sacramento, CA.

USEPA, Test Methods for Evaluating Solid Waste, Physical/Chemical Methods, SW-846, Final Update III, June 1997.

Watershed Management Institute. 1997. Operation, Maintenance, and Management of Stormwater Management Systems. Watershed Management Institute, Ingleside, MD.

State of California 1985. California Code of Federal Regulation, Title 22, Article 11. Criteria for the identification of hazardous and extremely hazardous wastes. Register 85, No. 3.1-12-85, Para. 66693-66796, pp. 1800.75-1800.86.

CALTRANS
BMP RETROFIT PILOT PROGRAM

DISTRICT 7, LOS ANGELES

BMP OPERATION, MAINTENANCE, AND MONITORING PLAN

VOLUME II

APPENDIX I-C
SAND FILTERS

September 1999

TABLE OF CONTENTS

Section **Page C-**

1.0 INTRODUCTION 1
1.1 Retrofit BMP Description....1
1.2 Evaluating BMP Performance 5
1.3 Deployment Criteria 5
1.4 Data Collection and Compilation 6
1.4.1 Data Requirements....6
1.4.2 Data Management 7
1.4.3 Data Analysis....7
1.5 Encroachment Permit and Restrictions 8

2.0 OPERATION AND MAINTENANCE....9
2.1 Operation and Maintenance Needs....9
2.2 Inspection Frequency....9
2.3 Aesthetic and Functional Maintenance 9
2.3.1 Aesthetic Maintenance....10
2.3.2 Functional Maintenance....10
2.4 Maintenance Frequency....11
2.5 Equipment, Resources, and Tools Needed 11
2.6 Debris and Sediment Disposal....12
2.7 Hazardous Waste 14
2.8 Checklist for Inspectors and Operation and Maintenance Personnel 14

3.0 VECTOR CONTROL AND MANAGEMENT 15

4.0 VEGETATION MANAGEMENT 16
4.1 Management for Optimal BMP Performance....16
4.2 Maintenance of Aesthetic Vegetation 16
4.3 Checklists 16

5.0 SAMPLING AND MONITORING....17
5.1 Equipment Installation....17
5.1.1 Water Quality Samplers....17
5.1.2 Flow Monitoring....19
5.1.3 Rain Gauge 19
5.1.4 Power 20
5.1.5 Telecommunications....20
5.1.6 Equipment Enclosures 20
5.2 Maintenance and Calibration....20
5.3 Preparation and Logistics 21
5.3.1 Weather Tracking 21
5.3.2 Mobilization and Staffing 21
5.3.3 Monitoring Station Preparation 22

TABLE OF CONTENTS (Continued)

5.4 Storm Monitoring 25
5.4.1 Storm Procedure 26
5.4.2 Composite Bottle Replacement 26
5.4.3 Storm Monitoring Office 26
5.4.4 Post-Sampling Procedures 27
5.4.5 Evaluation 28
5.4.6 Grab Sampling 28
5.5 Sample Tracking and Handling 30
5.6 Laboratory Selection, Sample Container Preparation, and Analytical Methods 33
5.6.1 Laboratory Selection 33
5.6.2 Holding Times, Sample Bottles, and Preparation 33
5.6.3 Project Reporting Limits 33
5.6.4 Laboratory Data Package Deliverables 33
5.7 Sediment Sampling and Testing for Disposal Purposes 37
5.7.1 Sediment Collection 37
5.7.2 Sediment Analyses 39
5.8 Empirical Observations 39
5.8.1 Purpose of Empirical Observations 39
5.8.2 Guidelines 40
5.8.3 Checklist for Sampling and Monitoring Personnel 40

6.0 REFERENCES 41

TABLES

2.1 Waste Disposal Services in Southern California
5.1 Stormwater Matrix Analytical Parameters, Methodologies, Reporting Limits, Holding Times, Container Volumes and Types, and Preservation
5.2 Sediment Matrix Analytical Parameters, Methodologies, Reporting Limits, Holding Times, Container Volumes and Types, and Preservation

FIGURES

1.1 Typical Schematic of a Sand Filter

1.0 INTRODUCTION

The Caltrans Best Management Practice (BMP) Retrofit Pilot Program is a comprehensive water quality monitoring study to evaluate the removal of contaminants in stormwater runoff from Caltrans roads and facilities through a series of BMP pilot installations. The overall objectives of this portion of the program are to document BMP contaminant removal efficiency and technical feasibility of retrofitting Caltrans facilities with water quality controls.

This Appendix of the Operations, Maintenance, and Monitoring Plan (OMM) applies to Sand Filters (SF). Refer to Volume I of the Operations, Maintenance, and Monitoring Plan for the Caltrans BMP Retrofit Pilot Program for project-specific requirements and procedures. Refer to the consultant's monitoring equipment manuals and stormwater monitoring Standard Operating Procedures (SOPs) for details related to equipment installation, equipment maintenance, and storm monitoring. Maintenance, safety, documentation, and storm monitoring tasks will be carried out according to the procedures detailed in this plan. Additional measures may be necessary due to unforeseen or temporary changes to the work environment at these sites.

1.1 Retrofit BMP Description

An SF uses sand as a filter medium. This type of filter removes pollutants through filtration, and sedimentation.

There are two types of SFs for the Retrofit Pilot Program. The first type (Type I) was designed by the City of Austin (1998), and the second type (Type II) is of a Delaware design (Young et al., 1996). The Type I SF has an open top and it incorporates a pre-treatment sedimentation basin. Runoff enters and fills the sedimentation basin. When a certain level is reached, runoff discharges through an outlet riser to an another basin containing filter media. The Type II SF is an enclosed, precast unit with a chamber used for sedimentation and energy dissipation and a second chamber containing filter media. Runoff is distributed to the first chamber through an inlet manifold. It then enters the second chamber over a series of weirs. Overflow and bypass capabilities and energy dissipaters are common components of both types of SFs. Sand filters should not be installed at locations with a large sedimentation potential. Refer to Figure 1.1 for a typical schematic of a sand filter.

The SF BMPs are designed to treat runoff from 1-year, 24-hour (or less) storm events. Some runoff from larger storms will bypass the facility. The larger the storm the more runoff is bypassed. Optimal treatment will occur for longer, less intense storms. Important considerations in the design, operation, maintenance, and management of SFs can be found in a guidance manual prepared for the U.S. EPA (Watershed Management Institute, Inc., 1997).

Figure 1.1
Schematic of a Typical Sand Filter

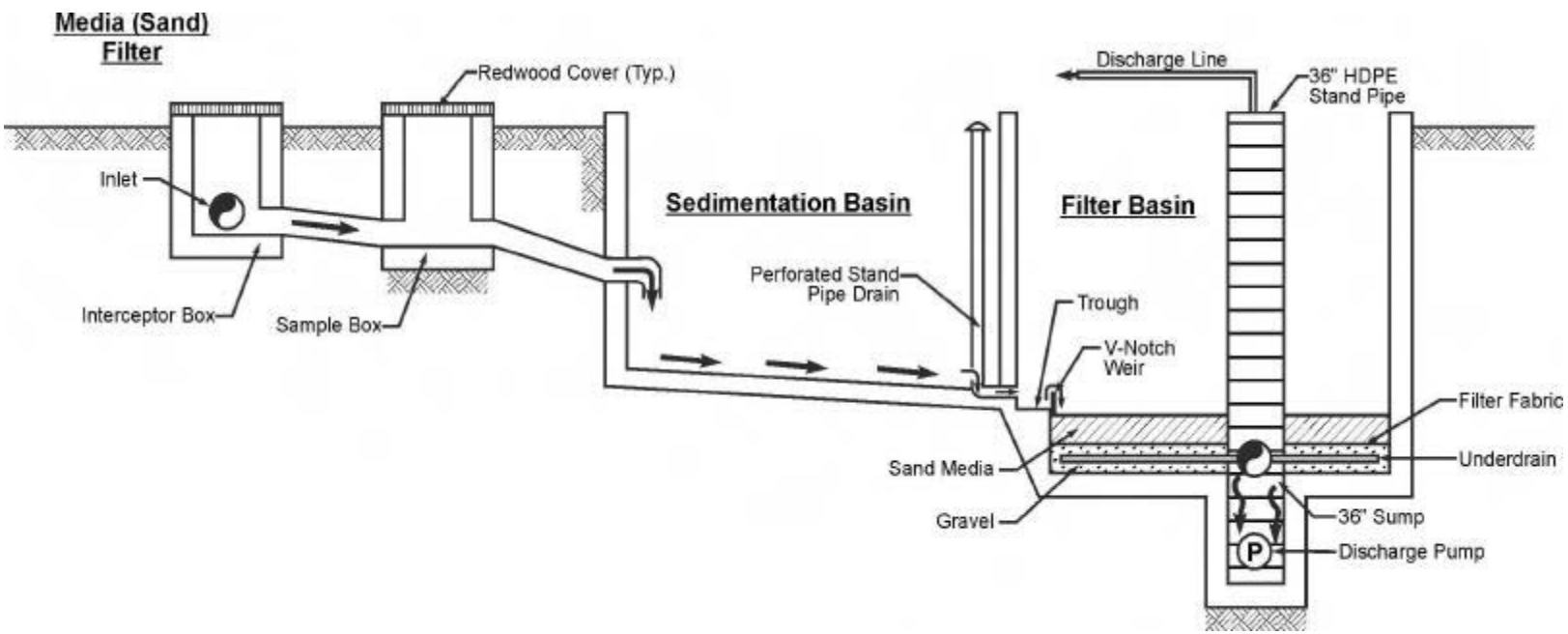

An SF retains water for varying periods of time. As such, the potential to produce vectors of human disease and habitats for nuisance insects, rodents, and vegetation exists.

1.2 Evaluating BMP Performance

To effectively evaluate the performance of an SF pilot facility, the following objectives will be met:

- Determine the quantity of runoff treated by the SF.
- Determine the reduction (or change) in concentrations between the influent to and the effluent from the SF.
- Determine and document the level of effort required to maintain the SF at optimal effectiveness.
- Determine and document the level of effort required to control vectors and nuisance insects, rodents, and vegetation at the SF.
- Determine and document the evaluation of BMP performance criteria relative to the qualitative benefits.

To effectively estimate the removal of contaminants from an SF, the quantity and quality of runoff entering the SF will be compared to the quantity and quality of water discharged from the SF. These data will allow a direct estimate of the total reduction in mass loadings for a variety of contaminants.

The effectiveness of an SF is also related to the implementation of strict maintenance procedures and the documentation of empirical observations. Items such as maintenance of storage volumes, discharge rates, sediment and trash build-up, and clogging may directly effect the performance of an SF.

1.3 Deployment Criteria

Stormwater samples will be collected from the EDB for up to ten storm events over a two wet seasons, weather permitting. Storms targeted for sampling will be separated by a minimum of 48 hours (72 hours preferably). This facility will be inspected per the guidelines given in Section 4.0 of the Field Guidance Notebook (FGN), which include a mandatory inspection after every storm greater than 0.50 inch.

Based on the rainfall requirements needed to generate monitorable flows in and out of the pilots, Caltrans has developed a refined monitoring team deployment criteria. The refined deployment criteria defines when to chase storms based on season, storm forecasts, and the current count of successfully monitored storms.

The deployment season, in which monitoring teams remain "on-call" and fully staffed, will be restricted to the portion of the year when rainfall is most probable and better predictable. Summer showers are not seen as predictable events, and dry watersheds and BMPs will retain more water which results in less effluent.

The deployment season will start on October 1. The season shall end after 3 weeks of dry weather where less than 0.2" of rainfall occurs in the San Diego or LA areas, but end no sooner than April 1 and not later than May 30th. This approach will provide a plan that adjusts to wet or dry springs.

The following criteria will decrease false starts, while allowing teams to continue to chase storms based on promising storm forecasts. The criteria will be used for pilots, regardless of drainage area size or land use.

“Forecast-Unlikely” set to less than 0.25” rain and less than 50% probability, (Decision = "No Go")

“Forecast-Marginal” set to 0.25” or greater and 50 –75% probability, (Caltrans Decision)

“Forecast-Highly Probable” set to 0.25” or greater and greater than 75% probability. (Decision = "Go")

Forecast information will be gathered as indicated in the OM&M manuals (e.g., Internet sources). As always, if conditions happen to allow paired samples to be successfully taken for any storm larger than 0.1", that sampling would be considered as a successful event, which would count towards fulfilling Scoping Study requirements.

When a specific pilot is successfully monitored for the total required storms per the applicable Scoping Study, the decision to further deploy to monitor that pilot will fall to Caltrans and no commitment to monitor beyond the terms of the Scoping Studies can be made at this time.

1.4 Data Collection and Compilation

1.4.1 Data Requirements

The following data will be collected to assess the performance and maintenance aspects of an SF facility:

- Water quality and quantity data of runoff into and discharge from the detention basin from flow-composite samples and first-flush grab (as soon as possible after the start of runoff) samples for at least eight storm events during two wet seasons.
- Rainfall data recorded as a function of time, from rainfall events during the study period.
- Observations of water quality, weather, antecedent conditions, spills, BMP operation, etc.
- Documentation records of inspections and maintenance activities performed.
- Vector monitoring and abatement data.
- Records of vector control measures taken.

- Vegetation management records for Type I SF.

1.4.2 Data Management

Consultants will be responsible for data management. Overall management of the data will be consistent with established Caltrans procedures for stormwater monitoring projects.

The consultant's Sample Control group will be responsible for tracking the analytical process to assure that laboratories are meeting the required turnaround times and are providing a complete deliverable package. Sample Control will also be responsible for accumulating copies of site visit logs, inspection logs, facility maintenance records, vector control sampling data, and logged rainfall and hydrographic data. Sample Control will receive the original hard and electronic copies from the laboratory, system managers, and field crews, and verify completeness and log dates of receipt. A copy of the data sets and log sheets will be filed in Sample Control's central filing system and another copy will be provided to the Database Manager. The originals will then be transferred to the Task Order Manager and filed with other project documentation to maintain complete project records.

Laboratories, system managers, and vector control crews will be requested to provide data in both hard copy and electronic formats. The forms of electronic submittals will be provided to the laboratories to ensure that the files can be imported into the project database with a minimum of editing. A relational database will be used for data. Laboratory data will be maintained and managed using Microsoft Excel® and Microsoft Access®. Files from the influent and effluent monitoring stations will be stored in the same database system and be linked to the laboratory database. The sampling system files will include rainfall, sampling, and flow data. Site characteristics will be stored in a separate file and linked to the both the chemical and sampling system files to enable useful data queries.

After each storm event monitored, data will be submitted to Caltrans based on "Caltrans Statewide Data Management Plan—Data Reported Protocol and Database," a technical memorandum dated 23 April 1998 from Larry Walker Associates to task order managers.

1.4.3 Data Analysis

Differences in storm characteristics, which can lead to differences in analyte loadings of monitored storm events, will be evaluated for each year of monitoring. Specific storm parameters such as total rainfall, average intensity, peak intensity, and antecedent conditions will be measured to determine if these parameters correlate with analyte concentrations and loads in stormwater discharges.

Contingent on the amount and quality of actual data collected, first year influent and effluent sampling results will be characterized by descriptive statistics and statistical comparisons. Event mean concentrations (EMCs) will be measured for each water quality parameter at both sampling points. Annual statistics based upon assumed log-normal distributions also will be calculated for each water quality parameter.

Differences in mean concentrations of analytes between storm events and locations will be considered to be statistically significant at P=0.10. Although the acceptable level of alpha error is typically set at P=0.05, this decision level was increased due to the relatively high coefficients of variation (CV) encountered with stormwater data.

Care will be taken to guard against false positive or negatives, so that widely varying storm event characteristics will not result in misinterpretation of the stormwater runoff data.

Widely varying storm event characteristics will be considered when evaluating BMP efficiencies based on stormwater runoff data. Empirical observations, maintenance activities, and vector control activities will be compiled and compared to water quality and quantity data.

1.5 Encroachment Permit and Restrictions

Visitation of an SF requires a Caltrans Encroachment Permit (Exhibit 9.3, Tab 9, *FGN*). Encroachment Permits will be made by either making an addendum to an existing permit or by applying for a new permit. A brief description of the project, site location, and any traffic control measures will be submitted with the application. The Caltrans District Encroachment Permit Office will be contacted for further information and direction (phone numbers can be found under Tab 2 in the *FGN* portion of the Volume II OMM Plan).

2.0 OPERATION AND MAINTENANCE

2.1 Operation and Maintenance Needs

The operational and maintenance needs of an SF are:

- Periodic removal of one to two inches of sand from the surface of the filter when drain time exceeds 48 hours or when loading rate drops below 9 ft/day.
- Refilling filter with sand to 18 inches (original depth) once the depth has dropped to 12 inches.
- Monitoring of episodic oil and grease clogging with subsequent removal of clogged sediment.
- Removal of sediment from sediment chamber when it begins to clog the orifices of the perforated riser (type I SF) or reaches 12 inches in depth (type II SF).
- Removal of standing water that may develop into a mosquito breeding area.
- Removal of graffiti, vegetation, and debris.
- Preventative maintenance on monitoring equipment.

2.2 Inspection Frequency

The facility will be inspected and inspection visits will be completely documented (refer to Section 2.8):

- Once a month at a minimum.
- After every large storm (after every storm monitored or those storms with more than 0.5 inches of precipitation).
- On a weekly basis during extended periods of wet weather.

2.3 Aesthetic and Functional Maintenance

Functional maintenance is important for performance and safety reasons. Aesthetic maintenance is important for public acceptance of stormwater facilities.

Both forms of maintenance will be combined into an overall Stormwater Management System Maintenance Program. Maintenance activities will be managed by the monitoring consultant. Maintenance items are included in the checklist/log forms found under Tab 5 of the *FGN*. Maintenance activities will conform to the practices specified in this plan.

2.3.1 Aesthetic Maintenance

The following activities will be included in the aesthetic maintenance program:

- **Graffiti Removal.** Graffiti will be removed in a timely manner to improve the appearance of the filter and its related monitoring equipment, and to discourage additional graffiti or other acts of vandalism.
- **Weed Control.** Weeds will be removed through mechanical means. Herbicides will not be used because these chemicals may impact the water quality monitoring.

2.3.2 Functional Maintenance

Functional maintenance has two components:

1. Preventive maintenance.
2. Corrective maintenance.

Preventive Maintenance

Preventive maintenance that will be done on a regular basis is detailed in the checklists contained in Form E, under Tab 5 of the *FGN*. Preventive maintenance activities to be performed on SFs are:

- **Trash and Debris.** Debris and trash will be removed to reduce the potential for outlet structures and other components from becoming clogged and inoperable during storm events.
- **Sediment Removal**. Sediments will be removed as needed to optimize performance of the filter. Disposal of sediments is discussed in Section 2.6 and will comply with local, county, state, or federal requirements.
- **Standing Water Removal.** Standing water will be removed as needed to preclude the development of mosquito breeding areas.
- **Mechanical Components.** Maintenance will be performed on valves, fence gates, locks, and access hatches in accordance with the manufacturers' recommendations. Mechanical components will be operated during each maintenance inspection to assure continued performance.

Corrective Maintenance

Corrective maintenance is required on an emergency or non-routine basis to correct problems and to restore the intended operation and safe function of SFs. Corrective maintenance activities include:

- **Removal of Debris and Sediment.** Visibly contaminated sediment, debris, and trash, which clog the filter, will be removed immediately and properly disposed of (see Section 2.6).

- **Structural Repairs.** Repairs to any structural component of an SF will be made promptly (e.g., within 10 working days). Designers and contractors will conduct repairs where structural damage has occurred.
- **Fence Repair.** Timely repair of fences (e.g., within 10 working days) will be done to maintain the security of the site. This pertains only to those sites not within maintenance yards.
- **General Facility Maintenance.** In addition to the above elements of corrective maintenance, general corrective maintenance will address the overall facility and its associated components. If corrective maintenance is being done to one component, other components will be inspected to see if maintenance is needed.

2.4 Maintenance Frequency

The maintenance indicator document, included as Appendix V, lists the schedule of maintenance activities to be implemented at an SF.

2.5 Equipment, Resources, and Tools Needed

Resources and the following equipment are needed by inspection personnel:

- Gloves, safety hat, safety glasses, safety boots, pen or pencil, and approved facility plans.
- Flashlight.
- Crowbar.
- Tape measure and other measuring device (survey rod), such as a clear PVC tube, to determine sediment accumulation depths and / or visible contamination depths.
- Local erosion, sediment control, or stormwater management handbooks.
- Rain and foul weather gear and other personal protection equipment (PPE).
- Confined space entry gear (where appropriate).
- Trash removal equipment.
- Sediment manipulation/removal equipment (i.e., shovels, rakes, 5 gallon buckets).
- This Appendix and *FGN*.
- Maintenance logs.
- Copies of necessary inspection reports and forms.
- Encroachment permit.
- Business cards or other identification.
- Camera to document field conditions.

Except for the items contained on site, the maintenance contractors will supply equipment, tools, and resources required for maintenance activities at SFs. At a minimum, these contractors will supply the following:

- Shovels, picks, rakes, wheel barrels, and other hand tools.
- Mechanics tools.
- Concrete tools.
- Painting equipment (brushes, rollers, and sprayers).
- Tape measures and sediment probes.
- Other necessary safety equipment (gloves, boots, hard hats, reflective vests, safety glasses, traffic control lighting, and confined space entry equipment).
- Pumps.
- Camera with film.

The consultants will supply to the maintenance contractors:

- This Appendix, *FGN*, and approved facility plans.
- Encroachment Permit.
- Logbook containing maintenance safety logs.

2.6 Debris and Sediment Disposal

Caltrans is responsible for any hazardous waste generated at SFs as the owner/generator. Consultants responsible for operating, maintaining, and monitoring the SFs will be responsible for their removal and disposal of waste material by independent contractors. Disposal of sediment, debris, and trash will be contracted out in accordance with local, county, state, and federal waste control programs. Potential disposal services contractors are listed in Table 2.1.

Prior to disposal, sediments will be characterized to determine the extent and type of chemical contamination. Evidence of oil and grease, antifreeze, solvents, fuel, hydrogen sulfide, and any other noxious substance will be noted. Observations will be used to determine if more than the standard analyte list of analytes is required. The standard analyte list (found in Table 5.2) is based on highway analytes that have a strong potential to exceed California Code of Regulations, Title 22 hazardous waste criteria (State of California, 1985). Methods used to sample sediments are discussed in Subsection 5.7. Dependent on quantities and site conditions, handling of removed sediments will be determined just prior to the time of removal maintenance. Sediments suspected to be contaminated will be kept separate. Onsite storage of sediments will be avoided to the extent possible. Disposal contractors will be preferred to immediately transport sediments offsite for disposal at the time of removal.

Table 2.1
Waste Disposal Services in Southern California

Laidlaw / Rollins (OPC) 5765 Alba Street Los Angeles, CA 92011 Ph: (213) 585-5063 Fax: (213) 589 5443 EPA: CAD050806850	Laidlaw Environmental Services 5295 S. Garvey Rd. Westmoreland, CA 92281 Ph: (619) 334-9400 Fax: (619) 344-9405 EPA: CAD000633164
TSM Recovery and Recycling 3422 W. Pico Blvd. Los Angeles, CA 90019 Ph: (213) 735-9443 EPA: CAD108040858	Pacific Resource Recovery 3150 E. Pico Blvd. Los Angeles, CA 90023 Ph: (800) 499-7145 Fax: (213) 780-9940 EPA: CAD008252405
Demenno Kerdoon Environmental Services 3650 E. 26th Street Los Angeles, CA 90023 Ph: (213) 268-5056 Fax: (213) 268-9672 EPA: CAD080033681	U.S. Filter Recovery Services 5375 S. Boyle Ave. Vernon, CA 99058 Ph: (213) 277-1500 Fax: (213) 588-0094 EPA: CAD097030993

2.7 Hazardous Waste

Suspected hazardous wastes will be analyzed to determine disposal options. Hazardous materials generated on site will be handled and disposed of according to local, state, and federal regulations. A solid or liquid waste is considered a hazardous waste if it exceeds the criteria listed in the California Code of Regulations, Title 22, Article 11 (State of California, 1985).

2.8 Checklist for Inspectors and Operation and Maintenance Personnel

Facility Inspection and Observational checklists or logs will be filled out during each visit to an SF**.** These will be kept in a record book (field logbook) to ensure that the SF is maintained at optimum levels throughout the monitoring period. The field logbook will also contain storm monitoring data sheets, and instrument calibration logs. A separate logbook containing Facility Inspection Checklists and Maintenance Log Sheets will be kept. A separate logbook also will be kept for vector control and management logsheets (Appendix IV of Volume II).

Refer to Forms C through F, under Tabs 4 and 5 of the *FGN* for checklists related to the inspection and maintenance requirements of an SF.

3.0 VECTOR CONTROL AND MANAGEMENT

Constructing retrofit pilot BMPs will modify the existing stormwater drainage systems. Because such retrofitting may create opportunities for disease carrying or nuisance organisms to flourish, insects such as (mosquitoes and midges) or rodents may have to be controlled. Appendix IV of Volume II further discusses vector control issues for the program.

4.0 VEGETATION MANAGEMENT

The main reasons for having a vegetation management program for an SF is:

- Uncontrolled vegetation at an SF may affect the performance.
- Maintaining vegetation may be necessary to prevent the facility from becoming a public "eyesore."
- Maintaining vegetation is key to controlling mosquito populations and other vector and nuisance organisms.

4.1 Management for Optimal BMP Performance

Maintenance and control of vegetation is essential to the optimal operation and performance of a Type I SF. Because Type II SFs are enclosed, vegetation within the BMP will not develop. Inspections will be conducted on a monthly basis for the presence of vegetation within the sedimentation and filter media chambers belonging to a Type I SF. These inspections are to insure that no vegetation establishes within the SF. Vegetation will reduce treatment capacity and may also clog the filter media. See Section 2.0 for details on controlling vegetation.

4.2 Maintenance of Aesthetic Vegetation

Within the fence-line surrounding an SF, trees, shrubs, and/or flowering plants may be planted or exist for aesthetic purposes if the site lends itself to landscaping activities (it is not paved). The overall health of these plants will be inspected along with the facility inspection. Maintenance activities that will be conducted on landscaped vegetation include:

- Weeding.
- Pruning.
- Replacement of dead or dying plants.

Vegetation removed from an SF facility will be promptly hauled off and disposed of properly. Cut vegetation will not be stockpiled on site.

4.3 Checklists

During the routine vegetation inspections of the filters, the Facility Inspection Checklist (Form C, Tab 4, *FGN*) will be completely filled out and signed by the inspector. This checklist incorporates necessary vegetation inspection requirements. A Maintenance Activity Checklist (Form E, Tab 5, *FGN*) will be filled out for maintenance activities performed.

5.0 SAMPLING AND MONITORING

This section details the monitoring equipment to be used, sampling protocols, and analytes to be tested.

5.1 Equipment Installation

The inflow and outflow conveyances for each SF will be equipped with a flow measuring device (either a flume or an area/velocity meter or both) and a sample intake. Flumes were cast into the conveyances during the construction phase. The flumes will incorporate some sort of depth measuring sensor. Flow sensors will be installed using manufacturer supplied hardware and in accordance to the manufacturers specifications. Sampler intakes will be mounted in each conveyance upstream of flumes or downstream of velocity/depth sensors. Stainless steel fasteners will be used to secure the intakes to the invert of the conveyances.

Flow measurement points were selected at locations that minimized flow measurement errors resulting from turbulence and surcharges. The following design specifications were considered during the engineering of the sampling points at each SF:

- The location at which flow will be measured will be at least 10 pipe diameters downstream and five pipe diameters upstream (or ten and five times the maximum anticipated head height) of any outfall, obstruction, inlet, or change in direction of the conveyance.
- The slope of the conveyance leading to the flow measuring point will be 2% or less.

These two requirements were considered to insure that flow is fully developed and is subcritical at the point where flow is measured.

Sensor wires and intake tubing will be routed through conduit from the manholes to equipment enclosures positioned on level ground near each manhole. The equipment enclosures will house the data logger/controller assemblies, samplers, cellular modem equipment, flow metering electronics, and batteries. A rain gauge will be mounted on a pole located adjacent to the inlet equipment enclosure. This pole will also support a cellular phone antenna and solar panel.

Components of each automatic sampling system used will undergo calibration and verification during installation and during maintenance and pre-storm visits.

5.1.1 Water Quality Samplers

The water quality samplers to be used at the SF facilities will be automatic and composed of a peristaltic pump, a liquid detector, and a base to hold a sample bottle and ice. Each time a pre-determined volume of liquid passes the sampling point, the data

logger/controller will signal the pump to deliver a self-calibrated sample volume. The suction hose used with the sampler will be 3/8-inch pure Teflon® tubing. Therefore, the sampler will be equipped with 3/8-inch silicon peristaltic tubing and a 3/8-inch stainless steel or Teflon® intake strainer of low-flow design. Strainers will be attached to the invert of each conveyance using stainless-steel fasteners. Samples will be collected into borosilicate glass bottles.

Materials used in the collection of stormwater samples will meet strict criteria to prevent any form of contamination of the sample. These materials will allow for both inorganic and organic trace toxicant analyses from the same sampler and composite bottle. Only Teflon® and the highest grade of borosilicate glass are suitable for both trace metal and organic analyses from the same composite sample bottle. Bottles will be cleaned according to procedure described below or in an equivalent manner such that bottles are decontaminated to blank acceptance levels. Sample hoses will also receive a thorough cleaning annually prior to the wet season. They will not be cleaned after each storm event. These bottles and hoses will be evaluated through an extensive blanking process to verify that the composite bottles and sample hoses are contamination-free and appropriately cleaned for both of inorganic and organic analyses.

Cleaning Procedures for Composite Bottles

Bottles will be:

1. Rinsed three times with warm tap water.
2. Scrubbed with a clean plastic brush.
3. Soaked in a 2% detergent (e.g., Contrad®) solution for at least 48-hours.
4. Rinsed three times with tap water.
5. Rinsed five times with Milli-Q or equivalent water, rotating the bottle to ensure contact with the entire inside surface.
6. Rinsed three times with hexane while rotating the bottle, and then air-dried.
7. Rinsed six times with Milli-Q water.
8. Soaked in 2N nitric acid for a minimum of 24-hours.
9. Rinsed six times with Milli-Q water.

Cleaning Procedures for Teflon®Hose and Other Sampling Equipment

Teflon® hose and other sampling equipment will be:

1. Teflon hose will be rinsed three times with a 2% Micro® solution or equivalent. Other sampling equipment will be washed with a 2% Micro® solution and a clean plastic brush.
2. Rinsed three times with warm tap water.
3. Rinsed three times with Milli-Q or equivalent water.
4. Rinsed three times with 2N nitric acid.
5. Soaked at least 24-hours in 2N nitric acid.

6. Rinsed three times with Milli-Q water.

5.1.2 Flow Monitoring

A true flow proportioned sample is a composite of individual sample aliquots that are collected for each set volume of water that passes by a sampling point. To obtain a valid composite sample, direct flow measurements will be made to control the sampling interval. At each SF, both primary and secondary flow metering devices will be used. A primary flow measuring device is a hydraulic structure (e.g., flume) inserted into a channel that changes the level of liquid in or near the structure. By knowing the shape and dimensions of the hydraulic structure, flow through or over the structure is related to the liquid level by a mathematical relationship. A secondary flow-metering device measures both liquid velocity and depth. Primary devices are preferable, unless hydraulic characteristics prohibit them.

Bubbler level meters will be used in conjunction with the flumes at locations not protected by manholes. To measure water depth, a stainless steel tube is mounted to the invert of the flume. Compressed air is fed into the tube, and the hydrostatic pressure in the tube is measured and converted to stage. Bubblers are slightly less accurate than ultrasonic look-down depth sensors, but they are not affected by wind, waves, and surface foam.

Because the influent sampling point will most likely be submerged during storms and because back-watering may occur at the discharge sampling points, an area-velocity (AV) flow meter (or equivalent) will be installed at most sampling points. These meters will have single-point, internally mounted, low profile depth and velocity sensors. A pressure transducer that senses gauge pressure will be used to measure depth. The pressure transducer will be vented to atmospheric pressure. The pressure transducer can be separate or integral to the velocity sensor. The velocity sensor will operate using the Doppler principal for measurement velocity and stage or instantaneous flow data will be transmitted to the data logger/controller upon query commands found in the data logger software.

5.1.3 Rain Gauge

The rain gauge to be used at the SF facilities will be of a “tipping bucket” design that incorporates a small “bucket” which holds a known amount of rainfall. When the bucket is filled, it tips the water out, momentarily closes a switch, and then resets itself and starts the process again. The data logger/controller counts each switch closure to accumulate rainfall totals. The rain gauges used at each SF location will tip after every 0.01 inch of rain. If an SF facility contains two equipment enclosures, only one of the enclosures will have a rain gauge.

5.1.4 Power

Power for the monitoring stations will be either from 110v AC (15 amp) or 12 volt batteries. If primary power is from batteries, a separate battery will be used to individually power the autosamplers, modems, and flow meters. Batteries will also be used at the AC sites as back-up. A solar panel, mounted on a pole, will be installed at each site to help keep the batteries charged. The solar panels will not work well during periods of intense storm activity.

5.1.5 Telecommunications

Cellular modem transceivers will be used to provide remote telecommunication access to the monitoring equipment. The ability to access a sampling station, monitor the status of the station in real-time, modify storm criteria, download new programs, and recover data allows for more cost effective, efficient monitoring. In addition, modem communication allows for remote initiation of sampling within minutes.

For each SF sampling point, a high performance base station antenna will be installed at the top of a mast that also supports a rain gauge (at one sampling point per BMP) and a solar panel. A filter will be installed in the lead-in from the antenna to prevent damage to the sampling station equipment due to nearby lightning strikes.

5.1.6 Equipment Enclosures

Walk-in fiberglass enclosures will be used to house the samplers and associated electronic equipment. These enclosures are to be bolted to the concrete pads and are to be locked to secure the monitoring equipment.

5.2 Maintenance and Calibration

A complete maintenance program will be performed at each SF after each storm event during the monitoring period, or in the absence of rain, on a monthly basis. Maintenance will include checking the performance of the equipment, checking power supplies, inspecting and clearing intake structures, cleaning contaminated equipment, and performing necessary equipment calibrations. Calibrations will be conducted in accordance to specifications in the individual component manuals. A monitoring equipment field data checklist will be completed during each maintenance visit (see Form I, Tab 6, *FGN*).

Stormwater equipment maintenance visits will be thoroughly documented. Written documentation includes the action taken at a site as well as the date performed. Accurate and thorough records of every station visit will be maintained and will aid in the evaluation of an SF's performance.

5.3 Preparation and Logistics

Success of the sampling effort requires careful preparation and planning to assure that high quality samples are obtained in association with each storm event.

5.3.1 Weather Tracking

Weather tracking will be the responsibility of the Task Order Manager and Storm Control personnel. During each storm season, the weather will be continually monitored with increased frequency as incoming systems are predicted. Sources of weather information to be used to track incoming storms include the National Weather Service, Weather Watch Service, Weather Network (WeatherNet), the Alert system from San Diego County, public broadcast information available on the Weather Channel and local news stations, and radar and satellite images downloaded from the Internet (e.g., www.weather.com).

5.3.2 Mobilization and Staffing

A staffing plan, which designates personnel and equipment for each facet of the storm monitoring, will be developed as soon as a potential event is forecast. Crews will consist of two individuals. The staffing plan will include the following information:

- Personnel needed for each position.
  - Storm Control
  - Shift Leader
  - Crew Chiefs
  - Crew Assistants
- Shift and zone (pilot facilities manned by a single crew) designations.
- Equipment mobilization.
- Communication channels.

Storm Monitoring Equipment

Equipment needed for stormwater sampling includes sampling equipment, sampling containers, safety equipment, personal rain gear, Storm Kits, and vehicles equipped with some type of mobile communication and highway safety equipment (see lists). Necessary equipment will be loaded into the appropriate vehicles early in the storm preparation sequence.

Storm Kit Equipment List

- Keypad/display
- 9-pin cable from keypad to data logger
- Full set of keys (on floatable bobber)
- Flashlights (2)
- Maps for required areas
- Large flat screwdriver
- Small flat screwdriver
- Umbrella
- High quality alkaline D-cell batteries
- Spare sample labels
- Pencils and indelible markers
- Desiccant (packages and jar)
- Diagonal clipper
- Electrical tape
- Cable ties (assorted sizes)
- Utility knife
- Ziplock baggies (assorted sizes)
- Labeling tape
- Polyethylene gloves
- Rubber bands
- Rope
- Gaff
- Throw rope

Storm Mobilization List

- Storm kit
- Log books
- Paper towels
- DI (de-ionized) water squirt bottles
- Tape gun with clear tape
- Spare sample labels
- Ice scoop
- Sample control paperwork
- Extra fine indelible markers
- 20 liter bottles in 10 gallon containment buckets
- Grab sample bottles
- Coolers and ice
- Grab pole
- DI water (3-gallon jug)
- Two-way radio or cellular phone
- Personal rain gear
- Any necessary safety gear

5.3.3 Monitoring Station Preparation

Prior to a storm event, the SF monitoring stations will be made ready to sample. This preparation includes entering the correct “Volume to Sample” values, setting the autosampler and the data logger to sampling mode, pre-icing the composite sample bottle, and performing a general equipment inspection. Section 5 of the *FGN* will be consulted for specific details on station preparation.

Determination of Volume to Sample

The latest weather forecast prior to each storm event will be examined to determine the proper "Volume to Sample" value to enter into the system. The amount of expected rainfall, how the station performed during the previous storm and how much water is needed for analysis at the station for each storm event will be taken into consideration.

The "Volume to Sample" is entered as a number with units in kilo-cubic feet (kcf). To determine this number, the drainage area in acres and the runoff coefficient, which is a number that reflects the permeability of the land in the study area, is listed below. Use the following equation to determine the volume of water expected at an SF for a given rainfall:

A x B x C x 3.63 = volume in kcf

Where:

A = inches of rain
B = drainage area in acres
C = runoff coefficient for land area
3.63 = conversion factor: acre-inches to kilo-cubic feet

To determine how much water will pass the station between samples, divide this result by the number of samples needed to satisfy the water volume requirement for analysis. A table is supplied as Exhibit 9.2 of the *FGN* that indicates the Volume to Sample value needed to collect the correct sample amount of water for the amount of expected rainfall.

After the proper Volume to Sample value is determined, it will be entered into the system before the rainfall starts. The runoff value will generally be entered from a remote computer. The value can also be entered upon arrival at the site before the system has entered storm mode. It is important that this value is accurate as possible; if the value is too high, the system will not collect enough water to be analyzed, and if the value is too low, the system may sample too fast to be monitored effectively (i.e., the percent storm capture will drop).

Prepare Sampler

Each autosampler will be reset and programmed to take 78, 250-ml aliquots. Also other user-entered parameters (tubing length, head height, bottle size, composite sample, sample upon one pulse, and enabled liquid detector) will be set correctly.

During each site visit, the state of the System Status Flags (switches) and Program Signature will also be recorded. These provide important information on the current sampling mode and overall integrity of the site program.

General Inspection

A brief physical inspection of the equipment will be made to make certain that there are no obvious problems such as broken conduit or a kinked hose. If possible, the intake will be cleared of debris; at sites with confined entry access, this is only possible if the safety requirements listed in Appendix II are met.

Documentation

Upon each site visit, whether during storm mode or not, records of the visit will be accurately recorded on the field form (see Form I, Tab 6, *FGN*). Whenever possible, any data being recorded by the sampling system (for example, time or current stage) will be verified. Also during each site visit, the Empirical Observation Checklist will be completed (Form H, Tab 6, *FGN*).

General Visitation Data

During each station visit, several display locations will be recorded. The log sheets will be used as a guide to the proper display locations to record (Form I, Tab 6, *FGN*). The following data will be recorded at both the influent and effluent stations:

- Flume Stage (ft).
- AV Meter Stage (ft).
- Velocity (f/s).
- Flume Q (flow in cfs).
- AV Meter Q (flow in cfs).
- Station ID.
- Data logger Battery Voltage.
- Flow Meter Battery Voltage.
- Cellular Equipment Battery Voltage.

Storm Visitation Data

Additional data will be recorded in the logbooks during storm monitoring, including:

- Volume (kcf)
  This is the volume of water that passed the station during the previous execution interval (one minute).
- Storm Sum
  This indicates the accumulated runoff volume in kilo cubic feet (kcf) that has passed the station since the last sample.
- Percent Storm Capture
  This indicates the percent of the storm effectively sampled by the system, and it provides a quick evaluation of the quality of the monitoring.
- Volume to Sample
  This value indicates the runoff volume (in kcf) that will pass the station before the system will take the next sample.
- Sample Count
  This number indicates the number of samples taken in the current bottle. It automatically re-zeroes every time a bottle is filled.

- Total Rain (inches)
  The total rainfall in inches since the start of the storm. This is accumulated each time that the rain bucket tips.
- Max Flow (Day)
  The day maximum flow occurred.
- Max Flow (time)
  When this number is positive, it indicates that the system was sampling during peak stage. If this number is negative, sampling did not occur during the peak stage because the bottle was full.
- Max Flow (cfs)
  This indicates the maximum flow rate during the current storm.
- Storm Volume (kcf)
  This indicates the total volume of water that has flowed past the station since the beginning of the storm.
- Storm Volume Sampled (kcf)
  This indicates the total volume of water that flowed past the station while the system has been in storm mode.

After data have been recorded, the system will be placed in low power mode and the keyboard unplugged.

5.4 Storm Monitoring

A priority objective of storm monitoring is to maximize the percent storm capture of the composite sample. This will be accomplished by ensuring that a composite bottle does not fill without being changed immediately. If a bottle does fill, the full sample bottle will be replaced and the system will be reset. To determine approximately when the bottle will fill and to ensure that the sampling process is not interrupted, the Storm Sum and the Volume to Sample will be evaluated. By examining how quickly the Storm Sum value is approaching the Volume to Sample value, the approximate time until the next sample is taken can be determined, as well as the approximate time until the bottle fills. The monitoring crew will be aware of the current status of each station in each of its BMP pilot facilities to determine which one will fill a bottle first so they can be on site as the bottle fills. If the station has been set properly for the amount of rainfall, changing the composite bottle will not be necessary. Volume to Sample settings will take into account the volume of sample required to meet analytical needs. This study requires approximately 3 liters of sample to meet these needs.

The data logger pulses the autosampler to take a sample when the accumulated Storm Sum equals the Volume to Sample. The storm sum is then reset to zero and the process is repeated. This continues until the storm ends or the bottle fills. Ideally, the Volume to Sample value will be accurate for the amount of rainfall, and the bottle will not need to be

changed during the storm. If, however, the rainfall is different than that predicted, a bottle may fill before the end of the storm. If this occurs, sampling will halt until the bottle is changed and the system is reset. Until the system is reset, part of the storm is not being sampled, and the percent capture will show a decrease. It is therefore imperative that the system is reset and the sample bottle is changed immediately to maintain 100% storm capture.

5.4.1 Storm Procedure

Upon arrival at a station during a storm event, the status of the composite sample bottle will be checked immediately. If it is not necessary to change the bottle at that time, the appropriate data on the log sheets will be recorded and the necessary physical measurements and observations will be taken. An approximate time that the bottle will fill will be determined, and, depending on how much time is available, the next station will be visited or wait until the bottle fills.

If the sample bottle is full, the system will be reset immediately, and the bottle replaced. When the bottle has been changed, the necessary station data will be filled in on Form I, Tab 6, in the *FGN*.

5.4.2 Composite Bottle Replacement

The removal of the sample bottle from the sampler requires great care; the bottles are heavy when full and are very slippery when wet, as well as being expensive and fragile. More importantly, if the sample is lost or contaminated, the effort and expense of the storm monitoring process is wasted. In all cases, two people will be present to ensure the security of the bottle and of the sample itself. Extreme care will be taken not to kink the intake hose when handling the sampler.

The bottle number will be recorded in the logbook and the bottle will be labeled appropriately. When a new bottle has been put in place, the sampler reset to continue sampling. Full bottles will be kept iced.

5.4.3 Storm Monitoring Office

The main objective of the Storm Monitoring Office is to update field crews on the status of their stations. This will greatly reduce the amount of time a crew will spend driving during storms. The monitoring of stations from a remote computer consists of calling each station and recording certain data for evaluation. When it is determined that a sampling system is close to filling a bottle, a field crew will be called and alerted to the status of the station. Remote interrogation of the storm stations will be logged (Form K, Tab 6, *FGN*) using the parameters in Forms J1 and J2, Tab 6, *FGN*.

Generally, the Storm Monitoring Office is also the storm control position. This means that critical decisions regarding the status of storm monitoring are made with input from the Storm Monitoring Office. Therefore, this position requires awareness of the latest weather forecasts to make informed decisions on the continued monitoring of the storm.

5.4.4 Post-Sampling Procedures

Declaring the end of a storm event may be difficult at an SF as the basin may hold water for longer than 48 hours and effluent flow may continue out of the basin. Thus, storm events can overlap. If storm events begin to overlap, two criteria will be used to either continue sampling or end sampling. If the effluent has 75% storm capture or more and 8 or more sample aliquots, monitoring will stop and the stations will be shut down. If the effluent has less than 75% storm capture or less than 8 sample aliquots, the influent and effluent sampling will continue monitoring the event until the event stops raining.

After a storm event has ended, the SF stations need to be shut down. Stations will be left ready for the next storm event in case there is insufficient time for a maintenance visit between storms. The following items will be taken care of, and everything will be well documented in the field logbook.

1) The storm monitoring program will be reset to prepare for another storm event.
2) The sample bottle will be replaced and the sampler reset.
3) The station will be physically inspected to determine if any damage was sustained during the storm event. The flow sensors will be inspected to determine if it is blocked by debris, or the intake is clogged (This is only possible if confined space requirements are met).
4) The data will be retrieved. This will be done via modem from the remote monitoring computer.
5) Battery voltages will be checked; batteries that are low will be replaced.
6) An Empirical Observation Checklist for each sampling point and SF will be completed (see Form H, Tab 6, *FGN*).

Data Retrieval

Data will be retrieved (dumped) from the data logger after each storm event during the storm season, and, during dry weather, approximately every month.

Chain-of-Custody Forms

When the grab samples have been collected, the paperwork will be filled out to ensure a smooth transfer of samples to the analytical laboratory. Chain-of-Custody forms will be filled out in detail describing the type of sample, the quantity of samples, and the time that the samples were collected. These forms will accompany the samples to the laboratory.

5.4.5 Evaluation

Upon termination of a storm event monitoring, evaluation of the influent and effluent stations' performance will be documented and reviewed before the samples collected are deemed valid. Evaluation of a monitoring station's performance is based on the answers to the following questions:

- Was the storm representative of the effectiveness range of the SF?
- Was capture of peak flow or runoff achieved at both sampling points?
- Did the equipment perform as designed throughout the duration of the storm event?
- Did the samplers accurately collect equal and reliable storm sample aliquots?
- Did the SF work as designed?

5.4.6 Grab Sampling

Total recoverable petroleum hydrocarbons (TRPH) and bacteria (fecal coliform) samples are unsuitable for collection by automatic means, and will be collected for two storms each monitoring year. TRPH is inappropriate because some material adheres to the surface of the tubing and the composite sample container. Automatic sampling for bacteria is inappropriate because the sampling equipment is not sterile after installation and exposure to the elements. Because these analytes are unsuitable for collecting using an automated approach, they will be collected as a grab sample from both the influent and effluent twice each storm monitoring year. The samples will be collected as close to the onset of discharge as possible.

It is imperative that collected grab samples are transferred to a designated meeting location immediately after the sampling has been completed. Chain-of-Custody forms for the samples will be completed and transport of the samples to the analytical laboratory will be coordinated to ensure that samples are handled and analyzed within the proper holding times to the extent possible.

It is essential that the following sample handling protocols be followed when collecting grab samples to keep contamination to a minimum:

- Turn the vehicle engine OFF to minimize exposure of the sample to exhaust fumes.
- Keep sample containers in clean coolers until sampling is actually initiated.

- Store filled sample bottles in clean coolers at 4°C.
- Keep the bottle lid clean and free of debris while the bottle is open.

Grab samples will be collected as near to the sampling point as possible. When unable to collect a sample near the intake, one will be collected as near the center of flow as possible or in an area of sufficient velocity to ensure good mixing. Both sampling points require a grab pole to collect the necessary grab samples. Containers will be fitted snugly into the bottle holder and the bottles will be seated on the upstream side of the grab pole to reduce potential contamination. The bottle will be filled with the mouth of the bottle faced into the current, if possible. Also, the bottle will be labeled before it is filled as it is nearly impossible to write on wet bottles. The station will be listed on the bottle to coincide with the station sampled.

Each type of grab sample may require special treatment to ensure the quality of the sample and the safety of the sampler. The preservative in the sample bottles is usually a concentrated acid, so care will be taken that the preservative does not come into contact with the skin. Gloves will be worn when handling sample containers. Both types of grab samples are discussed below.

TRPH analyses will be performed for diesel, gasoline, and oil fractions. Samples to be analyzed for TRPH gasoline fraction will be preserved with a concentrated acid (HCl), while TRPH diesel and oil containers are unpreserved. The sample bottles will be filled to below the neck and just above the shoulder. The bottle will not be overfilled because the preservative will be washed out. If the bottle is just slightly overfilled, a small amount of sample will be poured off after the preservative has mixed with the sample. A small amount of headspace is required in the containers to allow for expansion if the sample freezes while iced during shipping. These grab samples will be collected as soon as possible after runoff is detected.

Fecal Coliform samples are preserved with a small sodium thiosulfate tablet. To retain the tablet while sampling, it will be removed from the container when it is dipped into the flow. The bacteria bottle will be turned over causing the tablet to fall onto the cap of the bottle; the cap will be removed and set somewhere that will prevent it from becoming contaminated (out of the rain). The sample bottle will be filled to the shoulder, the cap tipped so the tablet falls into the sample, and the cap secured to the bottle. These grab samples will be collected as soon as possible after runoff is detected.

Attempts will be made to maintain the 6-hour holding time for bacteria to the extent practical. However, storm field conditions may prove this holding time infeasible. A maximum holding time of 24 hours will be followed in accordance with the "Standard Methods for the Examination of Water and Wastewater," 18th Edition.

5.5 Sample Tracking and Handling

Samples, regardless of their matrix, will be kept properly chilled and transferred to the analytical laboratory within holding times to achieve the highest quality data possible. To ensure proper tracking and handling of the samples, documentation will accompany the samples from the initial pickup to the final extractions and analysis. This documentation includes: Chain-of-Custody forms as required (see Form M, Tab 7, *FGN* for example forms). These forms or equivalent will be used to track and handle samples.

Collected samples will be labeled with the following information:

- Date.
- Time.
- Project name.
- SF name and number.
- Influent or effluent sampling location.
- Preservative.
- Matrix.
- Collector's initials.
- Sample I.D. number.
- Analyte(s) to be analyzed.
- Grab or composite sample.

The analytical suite for each station depends upon the total volume of water collected for the storm event. A Priority Analysis Sheet will be used in conjunction with a Sample Bottle Evaluation to determine the analytical suite for each station, based on the volume of water collected at that station, the volume to sample, and the percent storm capture. When the storm has been evaluated and samples from each station accounted for, a duplicate station and a QA/QC station will be selected based on stormwater volumes available. Duplicate and QA/QC samples will be prepared from the combined volume of the sample collected at the selected duplicate and QA/QC station.

Duplicate and QA/QC sample bottles will be labeled, recorded on the Chain-of-Custody form, and transported to the analytical laboratory.

Grab samples will be transported to the appropriate laboratory as soon as the grab sampling is completed, whereas the sample bottles for the composite samples are transferred at the end of the storm event. Samples will be properly logged on the Chain-of-Custody form and kept chilled in coolers. There will also be a field duplicate and extra water collected for QA/QC samples. These QA/QC grab samples will be collected at one of each consultant's BMPs during each storm event monitored. The sampling stations will be selected by Storm Control for collecting the duplicate grab samples. The crews

monitoring the stations will be fully briefed on the procedures for collecting QA/QC samples, and will be familiar with the sample identification numbering scheme for these samples because they are to be submitted to the laboratory as blind samples. These samples will be labeled, recorded on the Chain-of-Custody form, and transported to the analytical laboratory.

Each sample collected will receive a unique alphanumeric code (sample I.D. number) for tracking. This code will be standard for samples and contain information as to the station, date, and sequential monitoring event number. The following is an example of this code:

074202-IN-32898-001

Where:

074202 = Site number of the BMP.
IN = Influent sampling point at the site; EF = effluent sampling point
32898 = Julian day and year
001= sequential sample number for that date.

If multiple bottles are used or needed to capture a single event, the last data field will indicate the bottle number and the total bottles in that sampling event (i.e., 001-1/3, 001-2/3, 001-3/3 for a three-bottle collection scheme).

A set of QA/QC samples will be provided with each type of sample analyzed for each storm event. The analytical laboratory may also require additional QA/QC samples if one type of analysis is to be run in more than one batch.

Duplicate samples, MS/MSDs, and replicate/splits need not be from the same station. However, per storm event (or batch run), these QA/QC samples will be analyzed for the standard analytes as field samples. Most field QA/QC samples are submitted blind to the analytical laboratory, however, additional sample volumes provided to the laboratory for laboratory replicates or matrix spikes and matrix spike duplicates will be clearly identified. The main types of QA/QC samples that will be utilized for this study are as follows:

Duplicate Analyses - These analyses will be performed for both grab samples and composite samples and will require an additional set of sample containers to be sub-sampled. The results will allow evaluation of sampling error introduced by both field sampling and laboratory analyses by showing the reproducibility or precision of the sample collection and analyses. Duplicate samples will be sent “blind” to the laboratories. One duplicate sample will be collected from one of each consultant’s sampling locations during each storm event sampled and analyzed for the full list of analytes.

Duplicate samples will be identified by adding 500 to the sequential storm event number. For example, a duplicate sample for the same site above will be:

074202-IN-32898-501

Blanks - These are for field as well as laboratory samples. Blanks help verify that the equipment and the sample containers are not contaminated, and the sampling techniques used are non-contaminating. Reusable sample bottles, Teflon® tubing, and filters will be rinsed with reagent grade analytes free deionized water separately. The collected rinsates will be analyzed for the full list of analytes for the composited samples. Blanks will also be run on the analytical equipment. Rinsate blanks will be run on two samplers used by each consultant at one of their BMPs prior to the installation of the equipment. Each time a batch of composite bottles is cleaned, five percent of those filters will be blanked.

Equipment rinsate blanks will be identified by adding 600 to the sequential storm event number. For example, an equipment rinsate blank collected from the monitoring equipment from the same site above will be:

074202-IN-32898-601

Field blanks will be identified by adding 700 to the sequential storm event number. For example, field blank collected at the same site above will be:

074202-IN-32898-701

Matrix Spike and Matrix Duplicate Spike (MS/MSD) – The laboratory will require additional sample volumes for analyses that require matrix spikes and matrix spike duplicates to evaluate precision and accuracy of the laboratory analytical method, and to evaluate any matrix interference. MS/MSDs are analyzed for their analyte(s) and then spiked with a known amount of analyte(s). One MS/MSD sample will be run on metal and TRPH samples from one of each consultant's sampling locations during each storm event sampled.

MS/MSD samples will be indicated on Chain-of-Custody forms by clearly identifying that the sample is for MS/MSD purposes.

Laboratory Replicate/Split – This QA/QC analysis will require additional sample volumes. It is a duplicate analysis performed on the same sample and evaluates the repeatability (precision) of the analytical laboratories' results. One split sample will be run from one of each consultant's BMP sampling locations during each storm event sampled and analyzed for the full list of analytes.

Laboratory replicate/split samples will be indicated on Chain-of-Custody forms by clearly identifying that the sample is for laboratory replicate/split sample purposes.

5.6 Laboratory Selection, Sample Container Preparation, and Analytical Methods

5.6.1 Laboratory Selection

The selected laboratories have extensive experience with environmental samples and have the ability to provide rapid response to meet critical holding time requirements for analytes requiring expeditious analysis. Laboratories are certified by the California Department of Health Services for the requested analyses. Refer to Tab 2 in the *FGN* for specific laboratory listings.

5.6.2 Holding Times, Sample Bottles, and Preparation

The laboratories will be responsible for providing appropriate sample containers and, when necessary, with preservatives for each analysis. Table 5.1 provides a summary of sample volumes required for each analysis, along with the types of containers, holding times, and preservative. Because additional volumes are necessary for laboratory QA/QC, sample containers will provide at least twice the volume necessary to perform the requested analysis. The volume of the stormwater composite from each site is often the critical factor in determining the volume of sample that can be provided to the laboratory. The Project Task Order Manager and/or Storm Control personnel, in conjunction with the laboratories, will determine the allocation of sample volume for different analyses if sample volumes are not adequate to provide additional volume for each analysis. Table 5.1 lists the analyses along with a priority ranking. Also listed on Table 5.1 are the analytical methods and reporting limits.

Coliform bacteria samples have critical holding time requirements. The analyses should be started within 6 hours and not exceed 24 hours. This will require close coordination between the laboratory and the sampling teams to assure that these analyses are completed within holding time. With composite samples, the start of holding times is considered to be the time that the last aliquot was sampled.

5.6.3 Project Reporting Limits

Recommended analytical methods and reporting limits for this project are listed in Table 5.1. The reporting limits in this table are target reporting limits. In some cases, reporting limits may need to be adjusted due to limited sample volumes or potential matrix interference. In such cases, appropriate data qualifiers will be applied to the associated data.

5.6.4 Laboratory Data Package Deliverables

Laboratories will be required to provide a three-week turnaround on deliverables. The deliverable package will include a hard copy and electronic data files. The hard copy will

include standard narratives identifying any analytical or QA/QC problems and corrective actions. The electronic data files will contain information found in the hard copy reports submitted by the laboratories. Individual data sets will be submitted as either Microsoft Excel workbook files or as Microsoft Access database files in accordance with the Caltrans Data Management Plan – Data Reporting Protocol and Database (CTSW-TM-98-005). Each consultant will be responsible for laboratory coordination and data management.

Table 5.1
Stormwater Matrix
Analytical Parameters, Methodologies, Reporting Limits, Holding Times, Container Volumes and Types, and Preservation

Analyte	Priority Rank	Reporting Limit	Units	Analytical Technique	Method Number	Holding Time	Minimum Sample Volume	Preferred Volume and Container Type[1]	Preservation
Conventionals									
pH	1	0.1	Unit	Electrode	EPA 150.1	Immediately[2]	100 mL	1-100 mL glass/plastic	4°C
Specific Conductance	1	1.0	µmhos/cm	Electrometric	EPA 120.1	Immediately[2]	500 mL	1-500 mL glass/plastic	4°C
Hardness	5	2	mg/L	Titrimetric/ Colorimetric	EPA 130.2	6 months	100 mL	1-200 mL glass/plastic	HNO_3 to pH<2, 4°C
Total Suspended Solids	1	1	mg/L	Dried Filter Weight	EPA 160.2	7 days[3]	1 L	1-500 mL glass/plastic	4°C
Nutrients									
Nitrate-Nitrogen	2	0.01	mg/L	Colorimetric Ion Chromatography	EPA 353.3 EPA 300.0	28 days 48 hours	200 mL 200 mL	1-500 mL plastic 1-500 mL plastic	4°C and H_2SO_4 to pH<2 4°C
Total Kjeldahl Nitrogen	3	0.1	mg/L	Titrimetric/ Colorimetric	EPA 351.3	28 days	500 mL	1-1L plastic	4°C and H_2SO_4 to pH<2
Total Phosphorus	4	0.002	mg/L	Colorimetric	EPA 365.3	28 days	100 mL	1-250 mL plastic	4°C and H_2SO_4 to pH<2
Total/Dissolved Metals[4],[5]									
Copper	1	1	µg/L	ICP-MS	EPA 200.8	6 months	2 @ 500 mL	2-1L plastic	4°C and HNO_3 to pH<2 and filter
Lead	1	1	µg/L	ICP-MS	EPA 200.8	6 months	2 @ 500 mL	2-1L plastic	4°C and HNO_3 to pH<2 and filter
Zinc	1	1	µg/L	ICP-MS	EPA 200.8	6 months	2 @ 500 mL	2-1L plastic	4°C and HNO_3 to pH<2 and filter
Organics[6]									
Total Petroleum Hydrocarbons – Diesel/ Oil	Grab	250/200	µg/L	GC	EPA 8015M	14 days	1 L	2-1L amber glass	4°C
Total Petroleum Hydrocarbons - Gasoline	Grab	50	µg/L	GC	EPA 8015M	14 days	2-40 mL	3-40 mL VOA vials	4°C, HCl to pH<2
Bacteria[6]									
Fecal Coliform	Grab	2	MPN/100 mL	Multiple-tube	SM 9221E	6 hours[7]	50 mL	1-100 mL plastic	4°C

1. Analytes with the same preservative can be combined into a single container if the same laboratory is performing the analyses.
2. pH and Specific Conductance will be measured by the laboratory immediately upon receipt of the samples.
3. 7 days based upon limit for measuring TSS/no regulatory limit.
4. Total and dissolved metals samples are collected in separate containers. Only the total metals container will receive nitric acid.
5. Dissolved metals will be filtered in the laboratory prior to acidification.
6. Total Petroleum Hydrocarbon and Fecal Coliform grab samples will be collected for two storms per year.
   Attempts will be made to maintain the 6-hour holding time for bacteria samples to the extent possible. When not possible, a maximum holding time of 24 hours will be followed in accordance with "Standard Methods for the Examination of Water and Wastewater", 18th Edition.

5.7 Sediment Sampling and Testing for Disposal Purposes

As part of the maintenance program, sediment will be removed from the BMP when flows are hydraulically impeded. It is anticipated that sediment will accumulate relatively slowly over time. However, should sediment deposit in a rapid manner, an intermediate step of stockpiling may become necessary before offsite disposal. Section 5.7.1 provides procedures to be used when assessing potential sediment contamination in the event that intermediate onsite storage is necessary.

This subsection describes the sample collection procedures and analyses for assessing the quality of surface sediment removed from the BMP for disposal. Evidence of oil and grease, antifreeze, solvents, fuel, hydrogen sulfide, and any other noxious substance will be noted. Observations will be used to determine if more than the standard list of analytes is required. Observations will be documented on a checklist form (Form G, Tab 5, *FGN*). The standard list (Table 5.2) is based on highway contaminants that have the potential to exceed hazardous waste criteria. After laboratory analysis, results will be compared to regulatory limits listed in California Code of Regulations (CCR) Title 22, Section 66261.24 and Department of Toxic Substances Control (DTSC) variances. Based on this evaluation, proper disposal methods will be chosen.

5.7.1 Sediment Collection

Procedures in EPA Publication *Test Methods for Evaluating Solid Waste, Physical/ Chemical Methods (SW-846)* provide a method for determining the mean concentration of a given contaminant within a soil mass and the appropriate number of samples necessary to calculate this mean to the specified confidence interval. Initial sampling will generate a minimum number of samples/analyses as described below. Additional sample analyses may be required to meet the confidence levels given in *SW-846*, therefore archiving of samples will be necessary. Archived samples will be appropriately preserved and analyzed within the maximum holding time specified in Table 5.2. None of the samples will be allowed to be composited. The Quality Assurance/Quality Control (Appendix III) describes the QA/QC objectives for surface sediment samples. The minimum number of discrete samples initially required is given below:

- Drums: A minimum of one sample will be collected from each drum.
- Stockpiles less than 10 cubic yards: A minimum of two samples will be collected, one from each half of the stockpile. Sampling points will be selected randomly within each half.
- Stockpiles from 10-20 cubic yards: A minimum of three samples will be collected, one from each third of the stockpile. Sampling points will be selected randomly within each third.
- Stockpiles from 20-100 cubic yards: A minimum of four samples will be collected, one from each quarter of the stockpile. Sampling points will be selected randomly within each quarter.

Table 5.2
Sediment Matrix (Disposal)
Analytical Parameters, Methodologies, Reporting Limits, Holding Times, Container Volumes and Types, and Preservation

Parameter	Method	Units	Reporting Limit	Maximum Holding Time	Preservation	Container Size/Type[1]
Total Recoverable Petroleum Hydrocarbons (TRPH)	EPA 418.1	mg/kg	10	28 days	4^oC	8 oz glass jar
Volatile Organic Compounds	EPA 8260B	mg/kg	SW – 846 [5] requirements	14 days	4^oC	8 oz glass jar
California Code of Regulations (CCR), Title 22 Metals[2]:	EPA 6020/7471	mg/kg	SW – 846 [5] requirements	180 days 28 days for mercury	4^oC	8 oz glass jar
California Code of Regulations (CCR), Title 22 Waste Extraction Test (WET) Metals[3]:	STLC Extraction	mg/L	SW – 846 [5] requirements	180 days 28 days for mercury	4° C	NA
Toxicity Characteristic Leaching Procedure (TCLP) Metals[4]:	TCLP 1311	mg/L	SW – 846 [5] requirements	180 days 28 days for mercury	4° C	NA

(1) Each sample will be collected in two 8 oz glass jars
(2) California Code of Regulation (CCR), Title 22 Metals (Sb, As, Ba, Be, Cd, Cr (total), Co, Cu, Hg, Pb, Mo, Ni, Se, Ag, Tl, V, and Zn). Initial waste characterization results may lead to a shorter list of metals for subsequent sediment disposal.
(3) Any sample for total metals that are below the Total Threshold Limit Concentration [TTLC] but exceed the ten times Soluble Threshold Limit Concentration (STLC) will be further analyzed using the WET procedure. WET extracts will be analyzed only for metals which exceed the ten times STLC criteria. Sediments associated with total metal results that exceed TTLC values are automatically considered hazardous and therefore do not need to undergo the WET procedure.
(4) If any of the WET-soluble concentrations are equal to or greater than the TCLP regulatory thresholds, analyze the waste by TCLP.
(5) "Test Methods for Evaluating Solid Waste, Physical /Chemical Methods". SW-846, Update III.(SW-846)

- Stockpiles from 100-500 cubic yards: A minimum of one sample for each 25 cubic yard portion will be collected. The stockpile will be sectioned into 25 cubic yard portions to obtain a minimum of one sample for each 25 cubic yard portion. Sampling points will be selected randomly within each 25 cubic yard portion of the stockpile.

Random samples will be selected from locations on a three-dimensional grid. If the presence of materials such as boulders, debris, etc. hinder this process, the sample will be collected as close as possible to the randomly selected point without altering the essence of the random selection process. The following steps will be used to collect surface sediment samples:

1. Don personal protective equipment.
2. Locate the sample point in the stockpile or drum.
3. Collect the sample using a soil probe or equivalent. Ensure that the sample is collected at the correct depth and location that was randomly selected.
4. Fill one 8-ounce glass jar with a portion of the sample and close the container with the cap, using care not to aerate (volatilize) the sample. This jar will be labeled and analyzed for TRPH and VOCs.
5. Homogenize the other portion of the sample in a disposable bowl using a disposable spatula or spoon. Fill a second 8-ounce glass jar with this portion of the sample and close the container with the cap. This sample will be labeled and analyzed for metals.
6. Wipe the outside of each sample container with a clean paper towel.
7. Record the sampler's initials, date, and time on the pre-labeled sample bottle.
8. Place the sample containers in individual zip-top plastic bags and seal the bags.
9. Immediately pack the samples into a chilled cooler.
10. Record the required information on the Chain-of-Custody Form.
11. Document the sampling event, recording information in the designated field logbook.
12. Repeat the above steps until the minimum number of samples has been collected.

5.7.2 Sediment Analyses

Unless observations indicate additional testing, surface sediment samples submitted to the laboratory will be analyzed for analytes listed in Table 5.2 using Title 22 criteria (State of California, 1985). This table also lists the required reporting limits, analytical holding times, required preservation, and container sizes and types. Laboratory turn around times and data deliverables will be the same as those for the stormwater samples.

5.8 Empirical Observations

5.8.1 Purpose of Empirical Observations

Performance assessments of BMP facilities cannot be fully ascertained through analytical methods. "Empirical" observations are also critical in determining the overall performance of implemented water quality management practices and in ensuring that the practices are maintained at optimum levels. Other factors such as maintenance activities,

environmental variability, and physical processes, which cannot be determined analytically, can greatly influence the performance of a particular SF. Some of these factors such as rainfall quantity, rainfall intensity, and chamber retention times can, and, will be assessed through physical measurements. Other components such as trash build-up, sediment deposition, and runoff appearance can best be assessed through careful documented observations.

5.8.2 Guidelines

Observations will be succinct but also complete. For an SF performance evaluation, the following observations will be taken at the influent location, chambers, and effluent location:

- Meteorological characteristics (present and preceding period).
- Hydrologic and hydraulic characteristics (flowing and/or standing water).
- Inlet conditions (problems affecting performance).
- Water quality appearance (visual, olfactory).
- Solids deposition (trash and debris, sediments, organics) and resuspension.
- Treatment medium condition.
- Outlet conditions (problems affecting performance).
- Mosquitoes and other vectors.
- Structural condition of facility.
- Monitoring equipment condition.

5.8.3 Checklist for Sampling and Monitoring Personnel

Refer to Form H, Tab 6, *FGN* for a checklist (log form) that will be completely filled out by sampling and monitoring personnel during each storm event visit to the facility.

6.0 REFERENCES

City of Austin. 1988. Environmental Criteria Manual. Drainage Utility Department, Austin, Texas.

Eaton, A.D., L.S. Clesceri, and A.E. Greenberg, eds. 1995. Standard Methods for the Examination of Water and Wastewater, 19th Edition. American Public Health Association, American Water Works Association, and the Water Environment Federation.

Robert Bein, William Frost and Associates. 1997. Scoping Study, Retrofit Pilot Program, Caltrans District 7. Calif. Dept. Trans., Sacramento, CA.

State of California 1985. California Code of Regulations, Title 22, Article 11. Criteria for the identification of hazardous and extremely hazardous wastes. Register 85, No. 3.1-12-85, Para. 66693-66796, pp. 1800.75-1800.86.

Watershed Management Institute. 1997. Operation, Maintenance, and Management of Stormwater Management Systems. Watershed Management Institute, Ingleside, MD.

Young, G.K., et al. 1996. Evaluation and Management of Runoff Water Quality. Publication No. FHWA-PD-96-032. U.S. Department of transportation, Federal Highway Administration, Office of Environmental Planning.

CALTRANS
BMP RETROFIT PILOT PROGRAM

DISTRICT 7, LOS ANGELES

BMP OPERATION, MAINTENANCE, AND MONITORING PLAN

VOLUME II

APPENDIX I-D
BIOFILTRATION STRIP / INFILTRATION TRENCH

September 1999

TABLE OF CONTENTS

Section **Page D-**

1.0 INTRODUCTION 1
1.1 Retrofit BMP Description 1
1.2 Evaluating BMP Performance 2
1.3 Deployment Criteria 3
1.4 Data Collection and Compilation 4
1.4.1 Data Requirements 4
1.4.2 Data Management 5
1.4.3 Data Analysis 5
1.5 Encroachment Permit and Restrictions 6

2.0 OPERATION AND MAINTENANCE 7
2.1 Operation and Maintenance Needs 7
2.2 Inspection Frequency 7
2.3 Aesthetic and Functional Maintenance 7
2.3.1 Aesthetic Maintenance 8
2.3.2 Functional Maintenance 8
2.4 Maintenance Frequency 10
2.5 Equipment, Resources, and Tools Needed 10
2.6 Debris and Sediment Disposal 1
2.7 Hazardous Wastes 12
2.8 Checklist for Inspectors and Operation and Maintenance Personnel 12

3.0 VECTOR CONTROL AND MANAGEMENT 14

4.0 VEGETATION MANAGEMENT 15
4.1. Management for Optimal BMP Performance 15
4.2. Management for Optimal Vector Control 15
4.3. Maintenance Requirements 15
4.4. Checklists 16

5.0 SAMPLING AND MONITORING 17
5.1. Biofiltration Strip Monitoring Equipment 17
5.1.1. Biofiltration Strip Water Quality Samplers 17
5.2. Decontamination Procedures 18
5.2.1. Cleaning Procedures for Sample Bottles 18
5.2.2. Cleaning Procedures for Teflon® Hose and Other Sampling Equipment 18

TABLE OF CONTENTS (continued)

Section **Page D-**

5.3. Infiltration Trench Vadose Zone Monitoring 19
5.3.1. Equipment Selection and Description 19
5.3.2. Lysimeter Preparation, Borehole Preparation, and Lysimeter Installation 20
5.3.3. Vadose Zone Sample Collection 22
5.4. Rain Gauge 23
5.5. Water Level and Overflow Measurements for an Infiltration Trench 23
5.5.1. Equipment Selection and Description 23
5.5.2. Borehole Preparation, Well Construction and Pressure Transducer Installation 28
5.5.3. Data Collection 28
5.6. Maintenance and Calibration 28
5.7. Preparation and Logistics for Storm Monitoring 31
5.7.1 Weather Tracking 31
5.7.2 Mobilization and Staffing 31
5.7.3 Communication Channels 32
5.7.4 Storm Monitoring Equipment 32
5.7.5 Biofiltration Strip Monitoring Station Preparation 35
5.8. Biofiltration Strip Storm Monitoring 36
5.8.1 Storm Procedure 36
5.8.2 Sample Bottle Replacement 36
5.8.3 Storm Monitoring Office 36
5.8.4 Post-Sampling Procedures 37
5.8.5 Evaluation 38
5.8.6 Grab Sampling 38
5.9. Sample Tracking and Handling 39
5.10. Laboratory Selection, Sample Container Preparation, and Analytical Methods 42
5.10.1. Laboratory Selection 42
5.10.2. Holding Times, Sample Bottles, and Preparation 43
5.10.3. Project Reporting Limits 43
5.10.4. Laboratory Data Package Deliverables 44
5.11. Sediment Sampling 47
5.11.1. Sediment Collection 47
5.11.2. Sediment Analyses 48
5.12 Empirical Observations 50
5.12.1 Purpose of Empirical Observations 50
5.12.2 Guidelines 50
5.12.3 Checklist for Sampling and Monitoring Personnel 50

TABLE OF CONTENTS (continued)

Section **Page D-**

6.0 REFERENCES 51

TABLES

2.1 Waste Disposal Services in Southern California

5.1 Stormwater Matrix Analytical Parameters, Methodologies, Reporting Limits, Holding Times, Container Volumes and Types, and Preservation
5.2 Vadose Zone Matrix Analytical Parameters, Methodologies, Reporting Limits, Holding Times, Container Volumes and Types, and Preservation
5.3 Sediment Matrix (Disposal) Analytical Parameters, Methodologies, Reporting Limits, Holding Times, Container Volumes and Types, and Preservation

FIGURES

1.1 Cross-Section of Infiltration Trench
5.1 Lysimeter Detail
5.2 Sample Collection Configuration
5.3 Lysimeter Well Construction Detail
5.4 Pressure Transducer Detail
5.5 Observation Well Construction Detail

1.0 INTRODUCTION

The Caltrans Best Management Practice (BMP) Retrofit Pilot Program is a comprehensive water quality monitoring study to evaluate the removal of contaminants in stormwater runoff from Caltrans roads and facilities through a series of BMP pilot installations. The overall objectives of this portion of the program are to document BMP contaminant removal efficiency and technical feasibility.

This Appendix of the Operations, Maintenance, and Monitoring Plan (OMM) applies to the Biofiltration Strip/Infiltration Trench (Strip/IT). Refer to the consultant's monitoring equipment manuals and stormwater monitoring Standard Operating Procedures (SOPs) for details related to equipment installation, equipment maintenance, and storm monitoring. Maintenance, safety, documentation, and storm monitoring tasks will be carried out according to the procedures detailed in this plan. Additional measures may be necessary due to unforeseen or temporary changes to the work environment at these sites.

1.1 Retrofit BMP Description

The Strip, which is a pretreatment BMP, is used upstream of the IT to remove sediment and organic matter. Strips remove pollutants from stormwater runoff as it flows through the vegetated system by filtration, infiltration, adsorption, ion exchange, and biological removal. Strips are broad vegetated surfaces, which receive and discharge flow in relatively thin sheets. Strips are designed to treat stormwater runoff during "water quality storm events" (defined as up to the 1-year, 24-hour peak flows).

The IT is a shallow (0.6 to 3 meters) excavated trench backfilled with course stone aggregate that allows the temporary storage of stormwater runoff in the voids between the aggregate material. After stormwater runoff is temporarily stored in the IT, it percolates into the native soil. Stormwater runoff contaminants are prevented from discharging to receiving waters by (1) collecting and infiltrating runoff to the subsurface and (2) filtering and absorbing contaminants by the IT's aggregate. For an IT to properly function, the percolation rate needs to be maintained. This is accomplished by minimizing the build-up of sediment and organic matter in the IT. Figure 1.1 illustrates a cross-section view of the IT.

The IT is designed to handle the runoff volume from the tributary area that is generated by a 1-year, 24-hour storm event (2.5 cm of rain). After the runoff volume exceeds the capacity of the trench, it is diverted away using an overflow structure.

Figure 1.1 Cross-section of Infiltration Trench

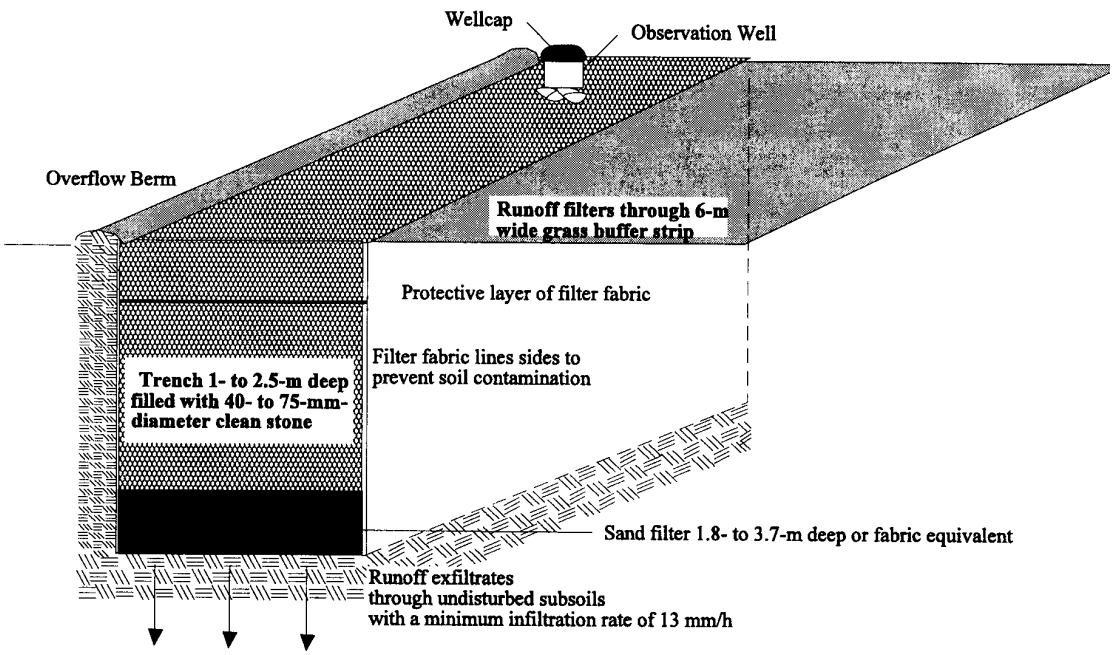

1.2 Evaluating BMP Performance

To effectively evaluate the performance of a Strip/IT pilot facility, the following objectives will be met:

- Determine the quantity of runoff treated/collected by the BMP.
- Determine the percolation rate changes of the trench and native soil over the course of this study.
- Determine the reduction (or change) in analyte concentrations between the influent and the effluent from the BMP.
- Determine the analyte concentrations infiltrating through the IT, into the native soil and into the vadose zone.
- Determine and document the level of effort required to maintain the BMP at optimal effectiveness (i.e., treatment of stormwater runoff for storm events producing up to the 1-year, 24-hour peak flow).
- Determine and document the level of effort required to control vectors of human disease and nuisance insects, rodents, and vegetation at the BMP.
- Determine and document BMP performance evaluation criteria relative to the qualitative benefits of the BMP.

To estimate the removal of contaminants from entering receiving waters, the quantity and quality of runoff treated, collected, and infiltrated by the Strip/IT will be obtained using

data collected at the up and downstream ends of the Strip, which pretreats runoff entering the IT. These data will allow a direct estimate of the total reduction in mass loadings for a variety of contaminants prior to entering the IT. Water infiltrated to the zone of native soils one to two meters below the IT will be analyzed to determine the potential effects, if any, on the groundwater. As the depth of groundwater at the site is greater than 120 feet, a monitoring well is not used at the District 7 site.

The effectiveness of a Strip/IT is also related to the implementation of maintenance procedures and the documentation of empirical observations. For example, the removal of trash, sediment, and organic matter build-up from Strip/IT, and infiltration capability, may directly affect the performance of a Strip/IT.

1.3 Deployment Criteria

Stormwater samples will be collected from the Strip for up to eight storm events over two wet seasons, weather permitting. Storms targeted for sampling will be separated by a minimum of 48 hours (72 hours preferably). The facility will be inspected per the guidelines given in Section 4.0 of the *Field Guidance Notebook* (*FGN*), which include a mandatory inspection after every storm with rainfall greater than 0.50 inch.

Based on the rainfall requirements needed to generate monitorable flows in and out of the pilots, Caltrans has developed a refined monitoring team deployment criteria. The refined deployment criteria defines when to chase storms based on season, storm forecasts, and the current count of successfully monitored storms.

The deployment season, in which monitoring teams remain "on-call" and fully staffed, will be restricted to the portion of the year when rainfall is most probable and better predictable. Summer showers are not seen as predictable events, and dry watersheds and BMPs will retain more water which results in less effluent.

The deployment season will start on October 1. The season shall end after 3 weeks of dry weather where less than 0.2" of rainfall occurs in the San Diego or LA areas, but end no sooner than April 1 and not later than May 30th. This approach will provide a plan that adjusts to wet or dry springs.

Further, monitoring teams have suggested that the decision tree for deployment in the OMM manuals be changed to address monitoring experience to date. The following criteria will decrease false starts, while allowing teams to continue to chase storms based on promising storm forecasts. The criteria should be used for all pilots, regardless of drainage area size or land use.

“Forecast-Unlikely” set to less than 0.25” rain and less than 50% probability, (Decision = "No Go")

"Forecast-Marginal" set to 0.25" or greater and 50 –75% probability, (Caltrans Decision)

"Forecast-Highly Probable" set to 0.25" or greater and greater than 75% probability. (Decision = "Go")

Forecast information will be gathered as indicated in the OM&M manuals (i.e. internet sources). As always, if conditions happen to allow paired samples to be successfully taken for any storm larger than 0.1", that sampling would be considered as a successful event, which would count towards fulfilling Scoping Study requirements.

When a specific pilot is successfully monitored for the total required storms per the applicable Scoping Study, the decision to further deploy to monitor that pilot will fall to Caltrans and no commitment to monitor beyond the terms of the Scoping Studies can be made at this time.

Water quality monitoring at the IT consists of collecting pore water samples from the vadose zone. Significant storms producing at least 0.25 inch of rain will be targeted for vadose zone monitoring during the months of December and February over two wet seasons for a total of four events. The targeted storms in December and February will also be the same as those targeted for stormwater runoff monitoring at the Strip. This will allow direct comparisons of stormwater runoff data entering the IT from the Strip and in the vadose zone. Percolation rate data will be collected continuously during the two storm seasons using a pressure transducer with internal data logger. Visual observations to assess the Strip/IT performance will be conducted during the storm events each storm season.

1.4 Data Collection and Compilation

1.4.1 Data Requirements

The following data will be collected to assess the performance and maintenance aspects of a Strip/IT:

- Water quality and quantity data of runoff discharged into the IT from the pretreatment Strip from flow-composite and first-flush (as soon as possible after the start of runoff) grab samples for at least eight storm events during two wet seasons, weather permitting.
- Rainfall data, recorded as a function of time, from rainfall events during the study period.
- Continuous trench water level data and overflow data.
- Vadose zone water quality sampling data.
- Observations of water quality, weather, antecedent conditions, spills, etc.
- Documentation records of inspections and maintenance activities performed.

- Vector monitoring and abatement data.
- Records of vector control measures taken.
- Vegetation management records.

1.4.2 Data Management

Consultants will be responsible for data management. Overall management of the data will be consistent with established Caltrans procedures for stormwater monitoring projects and this manual.

The consultant's Sample Control Section will be responsible for tracking the analytical process to assure that laboratories are meeting the required turnaround times and are providing a complete deliverable package. Sample Control will also be responsible for accumulating copies of site visit logs, inspection logs, facility maintenance records, vector control sampling data, and logged rainfall and hydrographic data. Sample Control will receive the original hard and electronic copies from the laboratory, system managers, and field crews, and verify completeness and log dates of receipt. A copy of the data sets and log sheets will be filed in Sample Control's central filing system and another copy will be provided to the consultant's Database Manager. The originals will then be transferred to the Task Order Manager and filed with the other project documentation to maintain complete project records.

Laboratories, system managers, and vector control crews will provide data in both hard copy and electronic formats. The forms of electronic submittals will be provided to the laboratories to ensure that the files can be imported into the project database with a minimum of editing. A relational database will be used for data. Laboratory data will be maintained and managed using Microsoft Excel® and Microsoft Access®. Files from the pretreatment Strip influent and effluent monitoring station will be stored in the same database system and will be linked to the vadose zone monitoring analytical database. The sampling system files will include rainfall, sampling, and flow data. Site characteristics will be stored in a separate file and linked to both the chemical and sampling system files to enable useful data queries.

Data will be submitted to Caltrans based on "Caltrans Statewide Data Management Plan-Data Reported Protocol and Database," a technical memorandum dated 23 April 1998 from Larry Walker Associates to all Task Order Managers.

1.4.3 Data Analysis

Differences in storm characteristics, which can lead to differences in analyte concentrations, will be evaluated for each year of monitoring. Specific storm parameters such as total rainfall, average intensity, peak intensity, and antecedent conditions will also be measured. Vadose zone analytical results will also be evaluated to determine if stormwater discharges to the IT have the potential to impact soil and groundwater.

First year sampling results for the influent and effluent locations of the Strip will be characterized by descriptive statistics. Statistical comparisons between the influent and effluent will also be performed. Event mean concentrations (EMCs) will be measured for each water quality parameter at both locations. Annual statistics based upon assumed log-normal distributions also will be calculated for each water quality parameter. Subsequent to characterization of the stormwater runoff into and from the Strip, statistical comparisons will be performed to determine differences between the quality of the influent and the quality of the effluent.

Differences in mean concentrations of analytes between storm events and locations will be considered to be statistically significant at $P \leq 0.10$. Although the acceptable level of alpha error is typically set at $P \leq 0.05$, this decision level was increased due to the relatively high coefficients of variation (CV) encountered with stormwater data.

Water level monitoring data collected using the pressure transducer with data logger will be evaluated to determine the infiltration rate of the trench and native soil. Because the pressure transducer and data logger monitor water level measurements continuously (frequency of 3 seconds or more), a variety of storms will be monitored. Data collected from each storm will be compared to determine their effects on infiltration rates. Infiltration rates during the course of this study will also be evaluated to determine if the IT is properly draining and if maintenance is needed.

Widely varying storm event characteristics will be considered when evaluating BMP efficiencies based on stormwater runoff data. Empirical observations, maintenance activities, and vector control activities will be compiled and compared to water quality and quantity data.

1.5 Encroachment Permit and Restrictions

Visitation to a Strip/IT requires a Caltrans Encroachment Permit. A copy of the Strip/IT permit is located in Tab 9 of the *FGN*. This permit lists access and safety requirements along with any restrictions. The respective Caltrans District Encroachment Permit Office will be contacted for further information and direction (phone numbers can be found under Tab 2 in the *FGN* portion of the Vol. II OMM Plan)

2.0 OPERATION AND MAINTENANCE

2.1 Operation and Maintenance Needs

The operational and maintenance needs of a Strip/IT are:

- Vegetation management at the pretreatment Strip to maintain the hydraulic functioning and efficient removal of trash, sediment, and organic matter.
- Animal and vector control.
- Periodic sediment removal from the pretreatment Strip and IT.
- Trash, debris, grass trimmings, tree prunings, and leaf collection and removal to prevent obstruction of a Strip/IT and monitoring equipment.
- Erosion and structural maintenance to prevent the loss of soil and maintain the performance of the Strip/IT.
- Stabilization of contributing drainage area.
- Removal of standing water which may contribute to the development of aquatic plant communities or mosquito breeding areas (see Appendix IV for details). If standing water remains in the IT for more than 72 hours, then maintenance is required. The cause of the standing water will be determined. Some possibilities are:
  1. Clogging: when facility is dry, sediments will be removed.
  2. Seasonal water table conditions: an outlet system may be required to be retrofitted if the problem is not transient.
- Removal of graffiti.
- Preventative maintenance on sampling and infiltration monitoring equipment.
- Structural maintenance of the IT's sidewalls and filter fabric.

2.2 Inspection Frequency

The facility will be inspected and the inspection visits will be completely documented (refer to Forms C and D in Tab 4):

- Once a month at a minimum.
- After every large storm (after every storm monitored or those storms with more than 0.50 inch of precipitation).
- On a weekly basis during extended periods of wet weather.

2.3 Aesthetic and Functional Maintenance

Aesthetic maintenance is important for public acceptance of stormwater facilities. Functional maintenance is important for performance and safety reasons.

Both forms of maintenance will be combined into an overall Stormwater Management System Maintenance Program. Maintenance activities will be carried out by the

consultant. Maintenance items are included in the checklist/logs found in Tab 5 of the *FGN*. Maintenance activities will conform to practices specified in this manual.

2.3.1 Aesthetic Maintenance

The following activities will be included in the aesthetic maintenance program:

- **Graffiti Removal.** Graffiti will be removed in a timely manner to improve the appearance of a Strip/IT and to discourage additional graffiti or other acts of vandalism.
- **Grass Trimming.** Trimming of grass will be done on the pretreatment Strip to the IT, around fences, at the inlet and outlet structures, and sampling structures. More specifics on vegetation management are given in Section 4.0.
- **Weed Control.** Weeds will be removed through mechanical means. Herbicides will not be used because these chemicals may impact the water quality monitoring. More specifics on vegetation management are given in Section 4.0.

2.3.2 Functional Maintenance

Functional maintenance has two components:

1. Preventive maintenance
2. Corrective maintenance

Preventive Maintenance

Preventive maintenance that will be done on a regular basis is detailed in the checklists in Tab 5 of the *FGN*. Preventive maintenance activities to be instituted at a Strip/IT are:

- **Grass Mowing.** Vegetation within the pretreatment Strip will be kept short to maintain adequate hydraulic functioning and to limit the development of faunal habitats. More specifics on vegetation management are given in Section 4.0.
- **Trash and Debris.** During each inspection and maintenance visit to the site, debris and trash removal will be conducted to prevent the impedance of stormwater through the Strip and to reduce the potential for the IT and its components from becoming clogged and inoperable during storm events.
- **Sediment Removal**. Sediment accumulation, as part of the operation and maintenance program at a Strip/IT, will be monitored once a month during the wet and dry seasons and after every large storm (0.50 inch). This information will be recorded on Forms CA and CB in Tab 4 of the FGN. The removal of this sediment will be recorded on Forms EA and EB in Tab 5. Additionally, for every storm event, empirical observations (including short circuiting, channeling or ponding, or decline from design performance) of the performance of the Strip/IT will be recorded on Form H in Tab 6 of the *FGN*. If accumulation of debris or sediment is determined to

be the cause of decline in design performance, prompt action (i.e., within ten working days) will be taken to restore the Strip/IT to design performance standards. Actions will include using additional fill and vegetation and/or removing accumulated sediment to correct channeling or ponding in the strip. If sediment is visible at the top of the trench, the top layer of trench, silt, filter fabric and stone will be removed, the stone washed, and the fabric and stone reinstalled into the trench.. Characterization and appropriate disposal of sediments is discussed in Section 2.6 and will comply with applicable local, county, state, or federal requirements. The strip will be regraded, if the flow gradient has changed, and then replanted with sod according to the schedule outlined in Appendix V.

- **Mechanical and Electronic Components.** Regularly scheduled maintenance will be performed on fences, gates, locks, and sampling and monitoring equipment in accordance with the manufacturers' recommendations. Electronic and mechanical components will be operated during each maintenance inspection to assure continued performance.
- **Fertilization and Irrigation**. The vegetation seed mix was designed so that it did not require irrigation or fertilizers. But, if vegetation desiccates, options will be discussed with Caltrans and the Plaintiffs to maintain vegetation.
- **Elimination of Mosquito Breeding Habitats**. The most effective mosquito control program is one that eliminates potential breeding habitats. Mosquito control measures are discussed further in Appendix IV.

Corrective Maintenance

Corrective maintenance is required on an emergency or non-routine basis to correct problems and to restore the intended operation and safe function of a Strip/IT. Corrective maintenance activities include:

- **Removal of Debris and Sediment.** Sediment, debris, trash, and organic matter that impede the infiltration rate (i.e., the infiltration rate drops below the design rate) of an IT and prevent vegetative growth on the pretreatment Strip, will be removed (from the top layer) and properly disposed (see Section 2.6). Temporary arrangements will be made for handling the sediments until a permanent arrangement is made.
- **Structural Repairs.** Repairs to structural component (e.g., filter fabric) of an IT and its inlet structure will be made within 30 working days). Designers or contractors will conduct repairs where structural damage has occurred.
- **Sidewall Repairs**. Damage to an IT will be repaired within 30 working days). Designers or contractors will be consulted before repairs.
- **Elimination of Mosquito Breeding Areas.** Consult Appendix IV for controlling mosquitoes.
- **Erosion Repair.** Where a reseeding program has been ineffective, or where other factors have created erosive conditions (i.e., pedestrian traffic, concentrated flow, etc.), corrective steps will be taken to prevent loss of soil and any subsequent danger

to the performance of the pretreatment Strip. There are a number of corrective actions than can be taken. These include erosion control blankets, riprap, sodding, or reduced flow through the area. Designers or contractors will be consulted to address erosion problems if the solution is not evident.

- **Fence Repair.** Timely repair of fences will be done to maintain the security of the site (e.g., within 30 working days).
- **Elimination of Trees and Woody Vegetation.** Woody terrestrial and wetland vegetation (which consists of willows *(Salix spp)*, mule fat *(baccharis salicifolia)*, cottonwood *(populus fremontii)*, western sycamore *(plantanus racemosa)* and emergent large stature monocots including the genera *Cyperus, Juncus, Scirpus, and Typha)*) will be removed from the Strip. See Section 4.0 for further information on vegetation management.
- **Elimination of Animal Burrows.** Animal burrows will be filled and steps taken (filling and compacting) to remove the animals if burrowing problems continue to occur. If the problem persists, vector control specialists will be consulted regarding removal steps. This consulting is necessary as the threat of rabies in some areas may necessitate that the animals be destroyed rather than relocated (refer to Appendix IV). If the BMP performance is affected, abatement will begin immediately according to the directions in Appendix V. Otherwise, abatement will be performed annually in September..If burrows are found in the strip between March 1 and August 30, a biologist needs to confirm that no birds are nesting in the burrow before sealing the hole.
- **General Facility Maintenance.** In addition to the above elements of corrective maintenance, general corrective maintenance will address the overall facility and its associated components. If corrective maintenance is being done to one component, other components will be inspected to see if maintenance is needed.

2.4 Maintenance Frequency

The maintenance indicator document, included as Appendix V, lists the schedule of maintenance activities to be implemented for a Strip/IT.

2.5 Equipment, Resources, and Tools Needed

The following resources, equipment, and tools are needed by inspection personnel:

- Flashlight.
- Tape measure and other measuring device (e.g., survey rod) to determine sediment accumulation depths.
- Local erosion, sediment control, or stormwater management handbooks.
- Rain and foul weather gear.

- This Appendix and *FGN*.
- Logbook containing copies of necessary inspection reports and forms.
- Encroachment permit.
- Business cards or other identification.
- Camera to document field conditions.

Except for the items contained onsite, the maintenance contractors will supply the equipment, tools, and resources required for maintenance activities at a Strip/IT. At a minimum, these contractors will supply the following:

- Earth moving equipment (loaders, backhoes, graders, draglines, and vacuum equipment).
- Dump trucks, equipment transports, and other hauling equipment.
- Shovels, picks, rakes, wheel barrels, and other hand tools.
- Pumps.
- Mechanics tools.
- Concrete tools.
- Vegetation maintenance equipment (hand and tractor lawn mowers, gas trimmers, seed spreaders, and leaf blowers).
- Painting Equipment (brushes, rollers, and sprayers).
- Safety equipment (gloves, boots, hard hats, reflective vests, safety glasses, traffic control lighting).

The consultants will supply to the maintenance contractors:

- This Appendix, *FGN*, and approved BMP facility plans.
- Encroachment Permit.
- Maintenance Logs.

No items for maintenance and inspection activities will be left onsite.

2.6 Debris and Sediment Disposal

Hazardous waste generated at a pretreatment Strip and IT is ultimately the responsibility of Caltrans because Caltrans is the owner/generator. Consultants responsible for operating, maintaining, and monitoring the pretreatment Strip and IT will be responsible for removal and disposal of the waste material. Disposal of sediment, debris, and trash will comply with appropriate local, county, state, and federal waste control programs. Table 2.1 shows a few of the possible disposal services for waste material.

Table 2.1
Waste Disposal Services in Southern California

Laidlaw / Rollins (OPC) 5765 Alba Street Los Angeles, CA 92011 Ph: (213) 585-5063 Fax: (213) 589 5443 EPA: CAD050806850	Laidlaw Environmental Services 5295 S. Garvey Rd. Westmoreland, CA 92281 Ph: (619) 334-9400 Fax: (619) 344-9405 EPA: CAD000633164
TSM Recovery and Recycling 3422 W. Pico Blvd. Los Angeles, CA 90019 Ph: (213) 735-9443 EPA: CAD108040858	Pacific Resource Recovery 3150 E. Pico Blvd. Los Angeles, CA 90023 Ph: (800) 499-7145 Fax: (213) 780-9940 EPA: CAD008252405
Demenno Kerdoon Environmental Services 3650 E. 26th Street Los Angeles, CA 90023 Ph: (213) 268-5056 Fax: (213) 268-9672 EPA: CAD080033681	U.S. Filter Recovery Services 5375 S. Boyle Ave. Vernon, CA 99058 Ph: (213) 277-1500 Fax: (213) 588-0094 EPA: CAD097030993

Prior to disposal, removed sediments will be inspected to determine the extent and type of chemical contamination. Evidence of oil and grease, antifreeze, solvents, fuel, hydrogen sulfide, and any other noxious substance will be noted. Observations will be used to determine if more than the standard analyte list is required. The standard analyte list (Table 5.3) is based on highway contaminants that have potential to exceed California Code of Regulations (CCR), Title 22 hazardous waste criteria (State of California, 1985). Methods used to sample sediments are discussed in Subsection 5.11. While analytical results are pending, the removed sediments will be stored in 55-gallon drums or in a stockpile onsite. Separate drums will be used to contain sediments suspected to be differently contaminated.

2.7 Hazardous Wastes

Suspected hazardous wastes will be analyzed to determine disposal options. Hazardous materials generated onsite will be handled and disposed of according to local, state, and federal regulations. A solid or liquid waste is considered a hazardous waste if it exceeds the criteria listed in the CCR, Title 22, Article 11.

2.8 Checklist for Inspectors and Operation and Maintenance Personnel

Facility Inspection and Observational checklists or logs will be filled out during each visit to a Strip/IT. These will be kept in a record book (field logbook) to ensure that the Strip/IT is maintained at optimum levels throughout the monitoring period. The field

logbook will also contain storm monitoring data sheets, and instrument calibration logs. A separate logbook containing Facility Inspection Checklists and Maintenance Log Sheets will be kept. A separate logbook also will be kept for vector control and management log sheets (Appendix IV of Volume II).

Refer to Forms CA, CB, DA, DB, EA, EB, FA, and FB in Tabs 4 and 5 of the *FGN* for checklists related to the inspection and maintenance requirements of a Strip/IT.

3.0 VECTOR CONTROL AND MANAGEMENT

Constructing retrofit pilot BMPs will modify the existing stormwater drainage systems. Because such retrofitting may create opportunities for disease carrying organisms to flourish, insects (such as mosquitoes and midges) or rodents may have to be controlled. Vector control and abatement will be performed in accordance with Appendix IV and by subcontracted Vector Control Districts.

4.0 VEGETATION MANAGEMENT

The three main reasons for having a vegetation management program for a pretreatment Strip at an IT are:

1. Uncontrolled vegetation may affect a Strip's performance.
2. Maintaining vegetation is necessary to prevent the facility from becoming a public "eye sore".
3. Maintaining vegetation is key to controlling mosquito populations and other vector and nuisance organisms.

4.1 Management for Optimal BMP Performance

Maintenance and control of vegetation is essential to the optimal operation and performance of a Strip. The pretreatment Strip will be seeded with low-growing grasses, which eliminate the need for irrigation and fertilization.

The condition of the vegetation will be inspected on a monthly basis at a minimum. These inspections will ensure that the Strip vegetation is kept at approximately 6 inches, that the vegetation protecting the slopes is kept healthy and continuous, and that undesirable plant species do not take root. Shorter vegetation will optimize the treatment capacity, the hydraulic residence time of runoff, and will aid in vector control. Maintaining healthy and continuous vegetation on the slopes will minimize erosion. Preventing undesirable plant species from taking root will prevent plants with large root systems from damaging the embankments. See Section 2.0 for information on vegetative maintenance.

4.2 Management for Optimal Vector Control

If vegetation such as cattails, bulrush, or willows develops within the pretreatment Strip, problems may occur with vector control. Controlling vegetation and standing water is preferred to enacting vector abatement programs.

A potential vector problem might be created when grass clippings are washed into infiltration trenches. See Appendix IV of Volume II for more details.

4.3 Maintenance Requirements

Mowing is the preferred means for controlling vegetation at the pretreatment Strip. Controlling standing water will also be essential to controlling vegetation. Burning will not be allowed, and the use of herbicides will not be allowed because they can de-vegetate slopes and embankments for extended periods of time, and have detrimental effects to the quality of runoff treated at the facility.

When equipment is used to remove vegetation, care will be taken to prevent ruts, holes, and an uneven Strip floor. Such depressions can cause standing water that will create problems of vector control.

Additionally, the maintenance activities at the Strip will be carried out in a fashion that minimizes soil compaction.

Maintenance activities that will be conducted on landscaped vegetation include:

- Weeding.
- Mowing.
- Replacement of dead or dying plants.
- Removal of woody vegetation, shrubs, dwarf plantain, pickleweed and emergent wetland vegetation, and large debris.

The vegetation seed mix has been designed so that fertilization and irrigation is not necessary. Fertilizers and irrigation will not be used to maintain the vegetation. If vegetation does not survive without fertilization and irrigation, then Caltrans will work with the Plaintiff to discuss options for maintaining the BMP. Vegetation should be replaced in the Strip if coverage drops below 90%. The quantity of sod required will be assessed in May each year, with resodding of barren spots occurring in November. The sod will be irrigated until it becomes established.

Vegetation removed from the Strip will be promptly hauled off and disposed of properly. Cut vegetation will not be stockpiled onsite, especially in the Strip or IT.

4.4 Checklists

During the routine vegetation inspections of the pretreatment Strip, a BMP Site Inspection Checklists (Tab 4, Form CA in the *FGN*) will be completely filled out and signed by the inspector. These checklists incorporate the necessary vegetation inspection requirements. BMP Site Maintenance Activity Checklists (Tab 5, Form EA in the *FGN*) will be filled out for maintenance activities performed.

5.0 SAMPLING AND MONITORING

This Section details the monitoring equipment to be used at a Strip/IT, sampling protocols, analytes to be tested, and quality assurance/quality control guidelines.

5.1 Biofiltration Strip Monitoring Equipment

Stormwater runoff will flow through a transition structure equipped with a flume and will then spread evenly across a Strip. Influent flow will be measured and samples will be collected at this flume. After the runoff flows across the Strip, it will collect in a ditch, pass through a flume, and then will discharge into the IT. Effluent flow will be measured and samples will be collected at this flume.

Sampler intakes will be mounted in each conveyance approximately 0.6 meters (m) upstream of the flume or 1.2 m downstream of the bubbler tube (flow measurement device). Stainless steel concrete anchors will be used to secure the intakes to the invert of the conveyances.

Flow measurement points were selected at locations that minimized flow measurement errors resulting from turbulence and surcharges. Only experienced field crews will install monitoring equipment. Bubbler and intake tubing will be routed through conduit to equipment enclosures positioned on level ground near each flume. The equipment enclosures will house the data logger/controller assemblies, samplers, cellular modem equipment, flow metering electronics, and batteries.

Components of each automatic sampling system used will undergo calibration and verification during installation and also during maintenance and pre-storm visits.

5.1.1 Biofiltration Strip Water Quality Samplers

The water quality samplers that will be used at a Strip will be automatic and composed of a peristaltic pump, a liquid detector, and a base to hold a sample bottle and ice. Each time a pre-determined volume of liquid passes the sampling point, the data logger/controller will signal the pump to deliver a self-calibrated sample volume. The suction hose used with the sampler will be 3/8-inch pure Teflon® tubing. Therefore, the sampler will be equipped with 3/8-inch silicon peristaltic tubing and a 3/8-inch stainless steel or Teflon® intake strainer of low-flow design. Strainers will be attached to the invert of each conveyance using stainless-steel fasteners. Samples will be collected into borosilicate glass bottles. After the storm event, the laboratory will pour portions of samples from each composite bottle into individual sample bottles, ensuring they are properly composited.

5.2 Decontamination Procedures

Materials used in the collection of stormwater samples will meet criteria to prevent contamination of the sample. These materials will allow for both inorganic and organic trace toxicant analyses from the same sampler and sample bottles. Only Teflon® and borosilicate glass are suitable for both trace metal and organic analyses from the same sample bottle. Bottles will be cleaned according to USEPA-approved protocols consistent with approved methodology for analysis of stormwater samples (USEPA, 1983 and subsequent revisions). Sample hoses will be replaced and decontaminated annually, prior to the wet season, using the procedure described below. They will not be cleaned after each storm event. These bottles and hoses will be evaluated through a blanking process to verify that the sample bottles and sample hoses are decontaminated. Where possible, unused, disposable sampling equipment will be used to eliminate the need for decontamination.

5.2.1 Cleaning Procedures for Sample Bottles

Bottles will be:

1. Rinsed three times with warm tap water.
2. Scrubbed with a clean plastic brush.
3. Soaked in a 2% detergent (e.g., Contrad®) solution for at least 48-hours.
4. Rinsed three times with tap water.
5. Rinsed five times with Milli-Q or equivalent water, rotating the bottle to ensure contact with the entire inside surface.
6. Rinsed three times with hexane while rotating the bottle, and then air-dried.
7. Rinsed six times with Milli-Q water.
8. Soaked in 2N nitric acid for a minimum of 24-hours.
9. Rinsed six times with Milli-Q water.

5.2.2 Cleaning Procedures for Teflon®Hose and Other Sampling Equipment

Teflon® hose and other sampling equipment will be:

1. Teflon® hose will be rinsed three times with a 2% Micro® solution or equivalent. Other sampling equipment will be washed with a 2% Micro® solution and a clean plastic brush.
2. Rinsed three times with warm tap water.
3. Rinsed three times with Milli-Q or equivalent water.
4. Rinsed three times with 2N nitric acid.
5. Soaked at least 24-hours in 2N nitric acid.
6. Rinsed three times with Milli-Q water.

5.3 Infiltration Trench Vadose Zone Monitoring

One of the monitoring elements at the IT consists of measuring dissolved metals (copper, lead, and zinc) concentrations in the vadose zone. It consists of soil particles, pore spaces, and pore liquids that are held onto the surfaces of the particles. Pore liquids in the vadose zone are at pressures below atmospheric pressure and held in tension. Percolation of water through the vadose zone occurs when forces of gravity exceed tensional forces. At times, the soil pores may become entirely filled with water resulting in downward percolation of water, similar to that water percolating through the IT. To remove pore liquids, a vacuum is used to pull them from the pores. Sampling liquid from the vadose zone requires the use of a porous sampling device and a vacuum.

5.3.1 Equipment Selection and Description

A lysimeter is a soil-pore liquid sampler that is composed of two parts: (1) a body and (2) a porous filter membrane (refer to Figure 5.1). The porous filter membrane allows pore liquids to enter the lysimeter and collect before transferring a sample to the ground surface for collection and laboratory analysis. A lysimeter can be constructed from various materials including polyvinyl chloride (PVC), polyethylene, ceramic, or Teflon®.

The selection of soil pore liquid sampling equipment requires an understanding of the physical properties and construction details of a lysimeter and the chemical and physical properties of the constituents to be monitored. The ability of the porous membrane of the lysimeter to sample potential constituents is governed by the pore size of the filter membrane and the chemical inertness of the construction materials. Materials commonly used for the porous membrane of the lysimeter are ceramic and Teflon®. The body of a lysimeter is typically constructed of PVC or Teflon®.

Ceramic membranes adsorb several metals including copper, lead, and zinc, while major cations including calcium, sodium, potassium, and magnesium and carbon dioxide gas (CO_2) are desorbed. Additionally, the small pore size of ceramic membranes (approximately 3 to 5 microns) inhibits sampling many of the large molecular organic compounds, and increases the potential for clogging of the membrane with large molecular compounds and bacteria. Lysimeters constructed of Teflon® are chemically inert and do not adsorb or desorb the constituents monitored for in this program. The pore sizes of Teflon® membranes typically range from 50 to 300 microns, which allow larger molecular compounds to enter the lysimeter and be sampled. A distinct disadvantage of the Teflon® membrane is the necessity of placing a silica flour pack around the exterior of the lysimeter to reduce pore clogging and to enhance the vacuum of the lysimeter in low-soil moisture, high-soil tension environments.

The monitoring requirements for this program include analysis of dissolved copper, lead, and zinc. Based on these constituents, Teflon® was selected as the porous filter membrane because of its larger pore sizes and chemical inertness. In addition, it is

recommended that a Teflon® body and Teflon® tubing be used where pore liquids will contact the equipment. This use of Teflon® will reduce the adsorption or desorption of constituents.

Three types of lysimeters are available based on the position of the porous filter. These are the tube-type, cup-type, and casing-type lysimeters. A tube-type lysimeter was selected because the porous filter is situated above the fluid collection chamber. When applying a vacuum to the system to force the liquids to the surface, the liquids will not be forced through the porous filter. This will prevent over-concentrating the sample and losing the sample back into the formation. The collection chamber can hold approximately 400 milliliters (mL) of pore liquid before requiring extraction to the surface. An additional aspect to using an all-Teflon® body is that there is no "dead space" in the sample collection area where liquids may remain and be over-concentrated by continued sampling. A PVC lysimeter body and ceramic membrane can produce between 35 and 80 mL of "dead space" storage.

5.3.2 Lysimeter Preparation, Borehole Preparation, and Lysimeter Installation

Installation of the lysimeter will be in accordance with the manufacturer's recommendations. The following sections describe lysimeter preparation, borehole preparation, and lysimeter installation procedures.

Lysimeter Preparation

Before the lysimeter is installed, it will be vacuum tested to ensure that there is no air leakage. The procedures that will be used are described below. The manufacturer will ship the lysimeter with a latex or flexible plastic membrane around the porous membrane. Rubber bands will be placed over the membrane overlaps to maintain a seal. The lysimeter stopcocks and/or clamps will be closed. A vacuum pump will be connected to the vacuum/pressure tube and a vacuum in excess of 10 psi (508 mm of mercury [Hg]) will be applied. The vacuum reading on the gauge will be monitored and noted. The system will be left in this state for 3 hours. A drop of up to 1.5 psi (76 mm of Hg) over this time is acceptable. If a larger drop occurs, the connections will be re-tightened and the lysimeter will be re-tested.

After the lysimeter has passed this vacuum test, the lysimeter will be placed in distilled water and a vacuum of approximately 7.5 psi (380 mm of Hg) applied for about one hour. This procedure pre-wets all surfaces of the porous membrane, and removes entrained air in the porous membrane. The distilled water will be removed from the lysimeter before it is installed in the field by using the following protocol.

1. Fit a clean rigid polyethylene sample container (400 mL minimum volume) with a two-port bung to the sample collection tube, making a sealed system (refer to Figure 5.2). The tube from the lysimeter will protrude into the sample container

approximately one-half inch (13 mm). The other tube to the vacuum/pressure pump will be flush with the bung.

2. Ensure that the vacuum/pressure tube and sample collection tube stopcocks are in the open position.
3. Evacuate the sample from the lysimeter by applying a vacuum of approximately 10 psi (508 mm of Hg).
4. Close the sample tube stopcock and apply a vacuum of 10 psi (508 mm of Hg) to the vacuum/pressure tube and then close the vacuum tube stopcock. The lysimeter is now ready to be installed in the field.

Borehole Preparation

The borehole for the lysimeter will be excavated after the infiltration trench is fully excavated and before any washed gravel is placed into the trench. The borehole will be excavated to provide adequate space for the lysimeter body to be surrounded by a silica flour pack. A two-inch diameter (51 mm) lysimeter will be used and requires a six-inch (150mm) or larger diameter borehole. This diameter will allow for at least 1.5 inches (38 mm) of silica flour pack to fill the annular space between the filter membrane and the walls of the borehole. The borehole will be excavated to a depth of approximately 4.80 ft (1.46 m) below the IT floor (Figure 5.3). If difficulties are encountered in maintaining an open borehole, casing will be used to temporarily hold back the soil during lysimeter installation.

Lysimeter Installation

Crystalline silica flour and distilled water will be mixed at a ratio of 150 mL of water to 450 grams of silica flour. Approximately 50 pounds of silica flour will be mixed with 2 gallons of distilled water to make enough slurry for a single lysimeter installation in a six-inch (150 mm) borehole. The slurry will be mixed by adding the silica flour slowly to the distilled water under constant stirring. The mix will be completely blended to contain no lumps.

When the slurry is completely mixed, a portion will be poured into the borehole providing a bed for the lysimeter to be placed on. This bed will be poured to an approximately thickness of 0.10 ft (30 mm) (refer to Figure 5.3). After the bed is poured, a plug will be threaded onto the lysimeter so that PVC casing can be used to lower and support the lysimeter in the center of the borehole.

The PVC casing will extend to the top of the IT and will contain the vacuum/pressure and sample tubing. No PVC glue will be used to join PVC casing sections. A minimum of at least 1.5 inch (38 mm) of silica slurry will be placed in the annular space around the lysimeter. Slurry will also be poured into the annular space of the borehole to completely surround and cover the lysimeter body.

After the slurry has set for at least two hours, a bentonite seal will be installed in the annular space of the borehole from the top of the silica flour pack to the bottom of the infiltration trench. After the low metal concentration-type bentonite seal is installed, construction of the trench can be completed.

Upon completion of the infiltration trench construction, the lysimeter head assembly will be installed on the PVC casing and the vacuum/pressure and sample collection tubing will be connected to the appropriate ports. A locking metal cap will be installed over the lysimeter head assembly by anchoring cap to the concrete seal, as shown in Figure 5.3.

5.3.3 Vadose Zone Sample Collection

Because it is not initially known how quickly the water will pass through this soil, a performance test of the lysimeter will be conducted before the required December and January monitoring events. The performance test will take place providing the lysimeter has been installed and a storm event of at least 0.10 inch of rainfall occurs within a 24-hour period. The test will determine how long after a storm event sample collection will be attempted, and also will determine whether the lysimeter functions properly in this type of soil. During this pre-required monitoring event, sample collection will be attempted within 4 to 6 hours after the storm event and every two hours thereafter until a sample is obtained or a 24-hour period has passed. If sample collection is successful, no additional performance testing will be done, and sample collection in December and January will be attempted within the time period determined during the pre-required monitoring event. Samples from this pre-required monitoring event will only be sent to the laboratory for analysis if so directed by Caltrans. If sample collection is unsuccessful, Caltrans will be informed and a plan-of-action will be developed for future attempts to monitor pore water in the vadose zone.

Samples of pore liquid will be collected by applying a vacuum. The following protocol will be used to collect pore liquid samples using the lysimeter:

1. Place the lysimeter in the sample extraction mode by closing the sample collection stopcock.
2. Connect a 12-volt electric vacuum pump to the vacuum/pressure port. Slowly regulate the vacuum to 10 psi (508 mm of Hg) by adjusting the pressure vacuum stopcock on the lysimeter head assembly and then seal the system.
3. Once the vacuum is generated, pore liquid will be drawn from the soil pores and into the lysimeter. When the vacuum drops to 5 psi (254 mm of Hg) or less, attempt sample recovery.
4. Fit a clean, rigid, polyethylene sample container (400 mL minimum volume) with a two-port bung to the sample collection tube, making a sealed system (refer to Figure 5.2). The tube from the lysimeter will protrude into the sample container approximately one-half inch (13 mm). The tube to the vacuum/pressure pump will be flush with the bung.

5. Ensure that the vacuum/pressure tube and sample collection tube stopcocks are in the open position.
6. Evacuate the sample from the lysimeter by applying a vacuum of approximately 10 psi (508 mm of Hg).
7. A minimum volume of 100 mL (300 mL is recommended) is required for the analysis of dissolved copper, lead, and zinc. Transfer the sample to an unpreserved polyethylene bottle provided by the laboratory. If the required volume was not obtained, repeat Steps 1 through 6.
8. When the minimum volume of sample has been obtained, properly pack and transport the sample in accordance with the procedures described in Section 5.9. Ensure that a note has been recorded on the Chain-of-Custody form requiring the laboratory to filter the sample upon receipt.
9. In accordance with the manufacturer's recommendations, lysimeter equipment decontamination is not necessary.

5.4 Rain Gauge

To measure rainfall, two approaches may be used. A rain gauge having a "tipping bucket" design that incorporates a small "bucket" which holds a known amount of rainfall may be used onsite. When the bucket is filled, it tips the water out, momentarily closes a switch, and then resets itself and starts the process again. The data logger/controller counts each switch closure to accumulate rainfall totals. The rain gauges used will tip after every 0.01 inch of rain.

The second approach is to use local area rain gauges to obtain rainfall data. The location and owner of the rain gauge nearest to the BMP site can be obtained from the Los Angeles County Department of Public Works. Monthly rainfall reports issued by the 15th of each month can be obtained from the Los Angeles County Department of Public Works by contacting Mr. Joe Doughly at (626) 458-6123.

5.5 Water Level and Overflow Measurements for an IT

Water level measurements will be used to evaluate the infiltration rate of an IT. These data with influent flow will be used to estimate the quantity of runoff bypassing the trench through an overflow structure and will be used to determine if the IT is clogged and requires maintenance. The time at which overflow begins (the storage volume of the trench is filled) during a storm event will also be noted as applicable.

5.5.1 Equipment Selection and Description

A pressure transducer with internal data logger has been selected to monitor the water level in the trench (Figure 5.4). This equipment allows for unattended, log-term water level monitoring of the IT with water level measurements made at a frequency of 3 seconds or more.

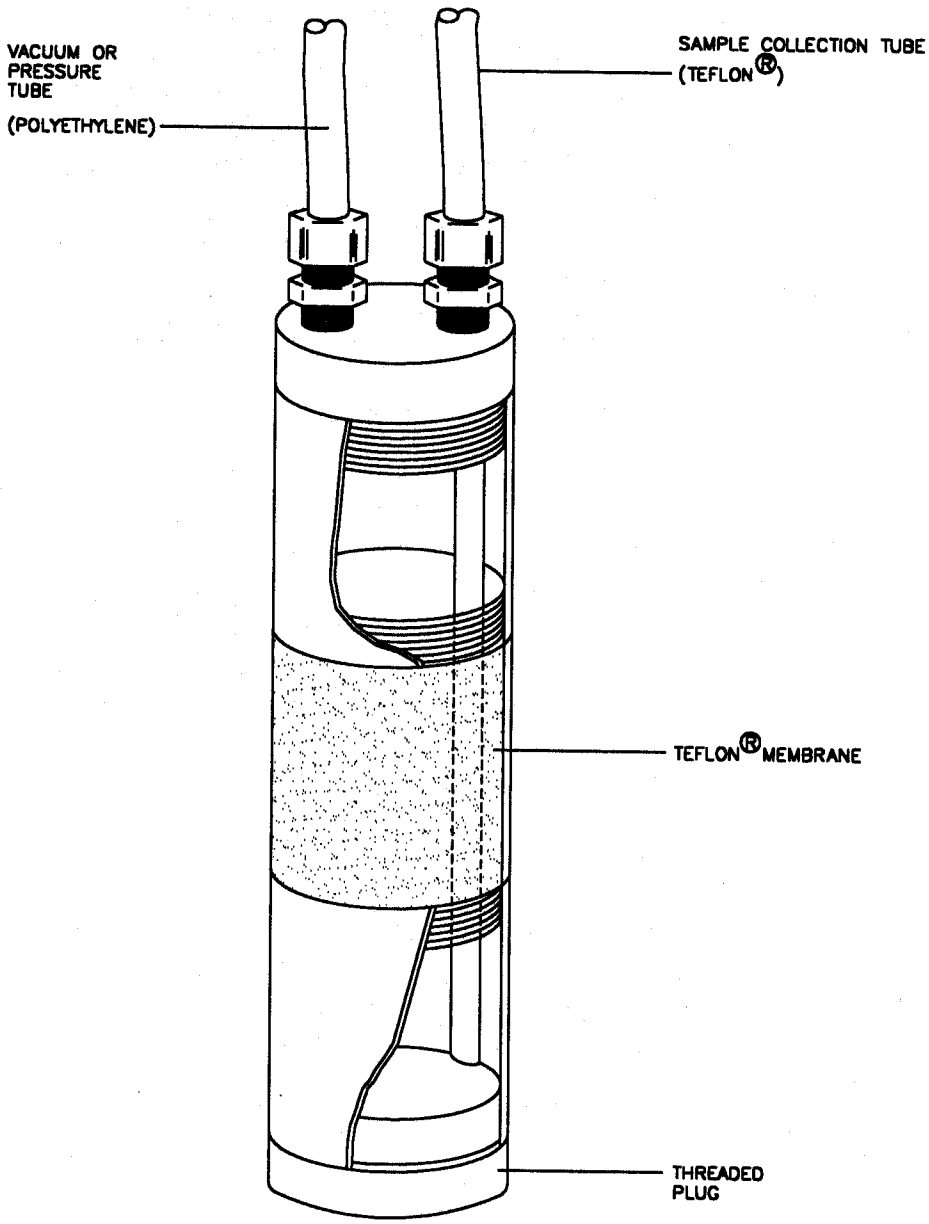

NOT TO SCALE

Prepared By: EDP
Checked By:

CALTRANS
DISTRICT 7
BMP PILOT PROGRAM

FIGURE: 5.1

LAW Crandall
LAWGIBB Group Member
A Division of Law Engineering and Environmental Services, Inc.

LYSIMETER DETAIL

CONTRACT 43A0002C, TASK ORDER 6

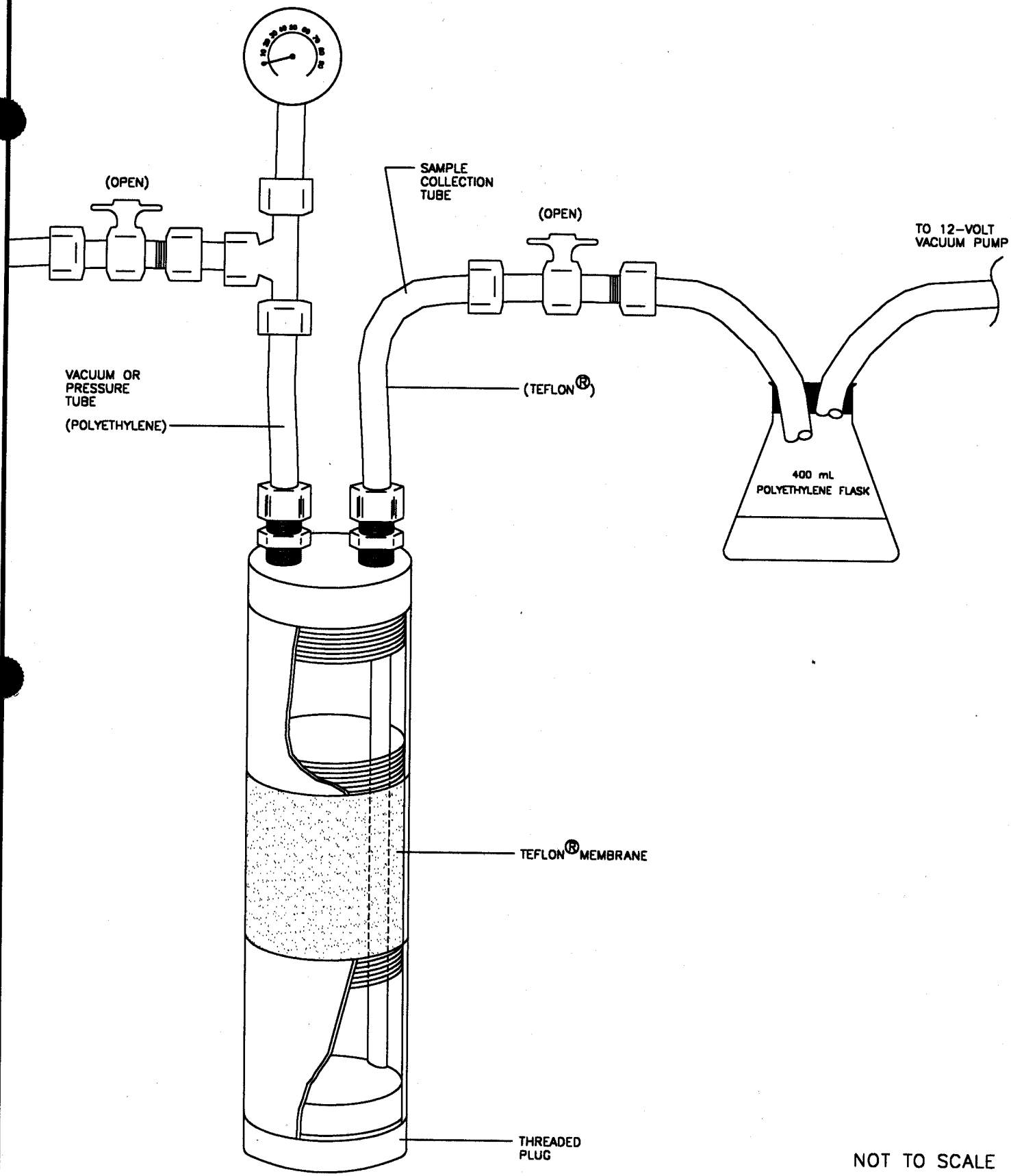

NOT TO SCALE

Prepared By: EDP
Checked By:

CALTRANS
DISTRICT 7
BMP PILOT PROGRAM

FIGURE: 5.2

LAW Crandall
LAWGIBB Group Member
A Division of Law Engineering and Environmental Services, Inc.

SAMPLE COLLECTION CONFIGURATION

CONTRACT 43A0002C, TASK ORDER 6

D:\70300\B[illegible]\T02.DWG

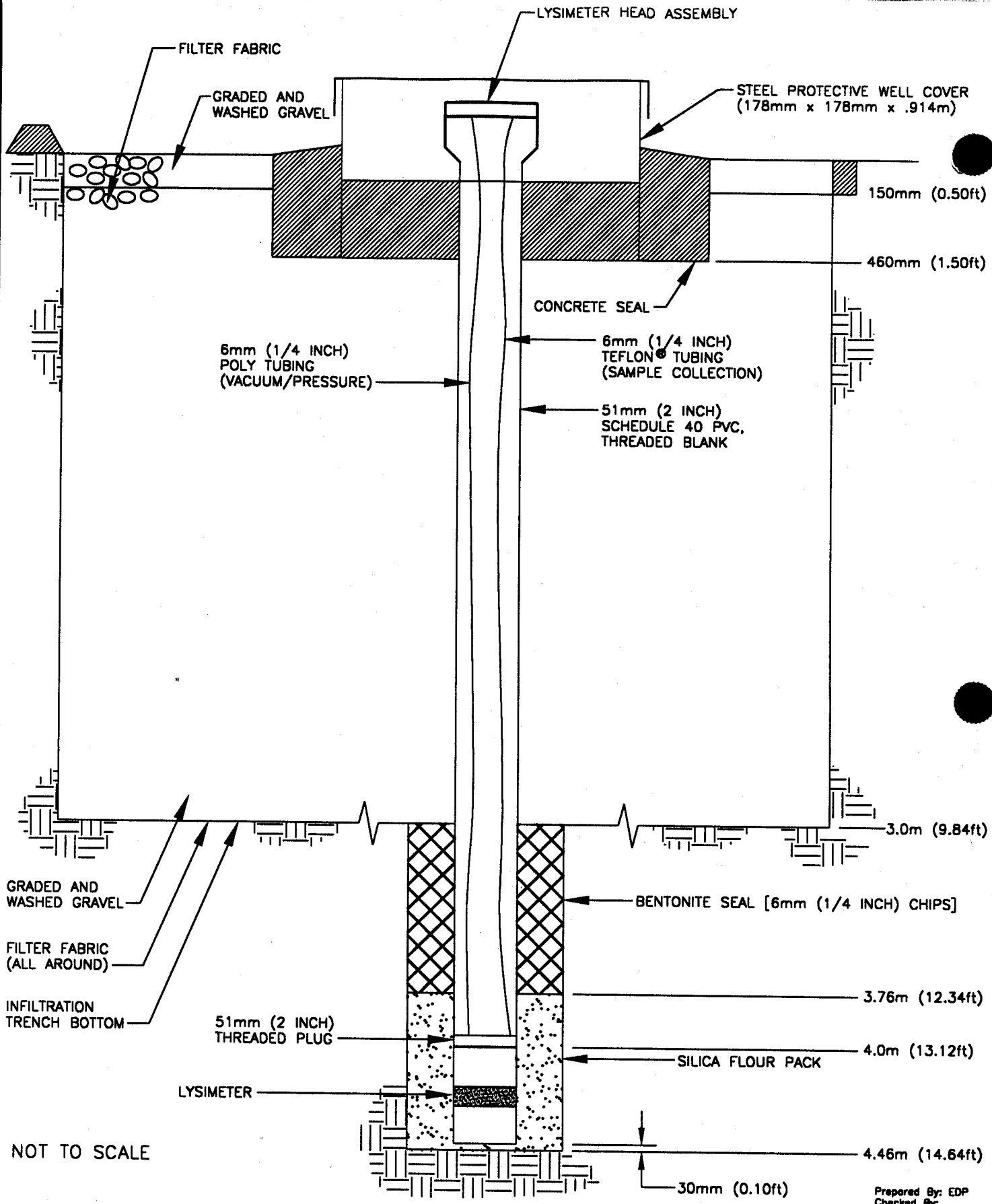

Prepared By: EDP
Checked By:

D:\70300\80111\IT03.DWG

CALTRANS
DISTRICT 7
BMP PILOT PROGRAM

FIGURE: 5.3

LAW Crandall
LAWGIBB Group Member
A Division of Law Engineering and Environmental Services, Inc.

LYSIMETER WELL
CONSTRUCTION DETAIL

CONTRACT 43A0002C, TASK ORDER 6

5.5.2 Borehole Preparation, Well Construction, and Pressure Transducer Installation

Installation of the pressure transducer will be in accordance with the manufacturer's recommendations. The following sections describe borehole preparation and pressure transducer installation procedures.

Borehole Preparation

An 8-inch (204 mm) borehole for 4-inch (102 mm) PVC casing will be excavated after the IT is fully excavated and before any washed gravel is placed into the trench. The borehole will be excavated to a depth of approximately 4 feet (1.22 m) below the trench floor (refer to Figure 5.5).

Well Construction

Bentonite chips (¼-inch [6mm]) will be poured into the borehole providing a bed for the PVC casing. This bed will be poured to an approximately thickness of 0.10 ft (30 mm) (refer to Figure 5.5). After the bed is poured, a plug will be secured to the bottom of the threaded-blank PVC casing. The casing will be centered in the borehole and placed on the bed of bentonite chips. The threaded-blank PVC casing will extend to the bottom of the IT. Slotted screen (0.40-inch) PVC casing will be threaded to the threaded-blank PVC casing and extended to 4-feet (1.22 m) below the IT surface. A second piece of threaded-blank PVC casing will be threaded to the slotted screen PVC casing and extended to approximately 6-inches (150 mm) above the IT surface. No PVC glue will be used to join section of PVC casing. Bentonite chips will be poured in the annular space of the borehole around the PVC casing to the depth reaching the bottom surface of IT and then hydrated.

Pressure Transducer Installation

After the bentonite has hydrated for approximately one hour, construction of the trench can be completed. Upon completion of the IT construction, a locking metal cap will be installed over the PVC casing by anchoring the cap to the concrete seal, as shown in Figure 5.5.

The pressure transducer will be installed in the PVC casing using the following steps.

1. Pour water into the PVC casing so that it rises to the bottom of the IT floor.
2. Lower the pressure transducer into the PVC casing to a depth of 12.84 feet (3.94 m) below ground surface. Check to ensure the pressure transducer has been set to the proper depth using an electric water level indicator.
3. Allow the pressure transducer to remain in the water for at least one-half hour before it is calibrated and programmed.

4. Use a water level indicator to calibrate the transducer.
5. Allow at least two hours to pass and remeasure the water level and check the transducer calibration.
6. Program the data logger to begin recording background water level measurements at a frequency of every two minutes.
7. Return to the site in two days and measure the water level with an electric water level indicator. Compare this measure with that measured by the pressure transducer. If the measurement is off by more than 0.02 feet (6 mm), recalibrate the pressure transducer. If the pressure transducer is off by more than 0.1 feet (30 mm), replace the transducer and recalibrate as described above.
8. Return to the site two days later and reconfirm the operation of the pressure transducer. If the measurements are within 0.01 feet (3 mm) then the equipment is operational.
9. Recalibrate the pressure transducer as needed and download the background data.

In the event that fine sediments are carried through the screen and accumulate in the well, the screen section may have to be developed to remove the fines adjacent to the screen.

5.5.3 Data Collection

Data is downloaded from the pressure transducer's data logger using a laptop computer or remotely through a cellular link. The laptop computer will have the manufacturer's software installed. Data will be downloaded on a monthly basis and managed by the program's database.

5.6 Maintenance and Calibration

A complete maintenance program will be performed at a Strip/IT after each large storm event during the monitoring period, or in the absence of rain, on a monthly basis. Maintenance will include checking the performance of the equipment, checking power supplies, inspecting and clearing the inlet and overflow structures, cleaning contaminated equipment, and performing necessary equipment calibrations. Calibrations will be conducted in accordance to specifications in the individual component manuals.

Stormwater equipment maintenance visits will be thoroughly documented. Written documentation includes the action taken at a site as well as the date performed. Accurate and thorough records of site visits will be maintained. The logs illustrated in Forms DA, DB, FA, FB, and I in Tabs 4, 5 and 6 in the *FGN* will be used to document maintenance and calibrations.

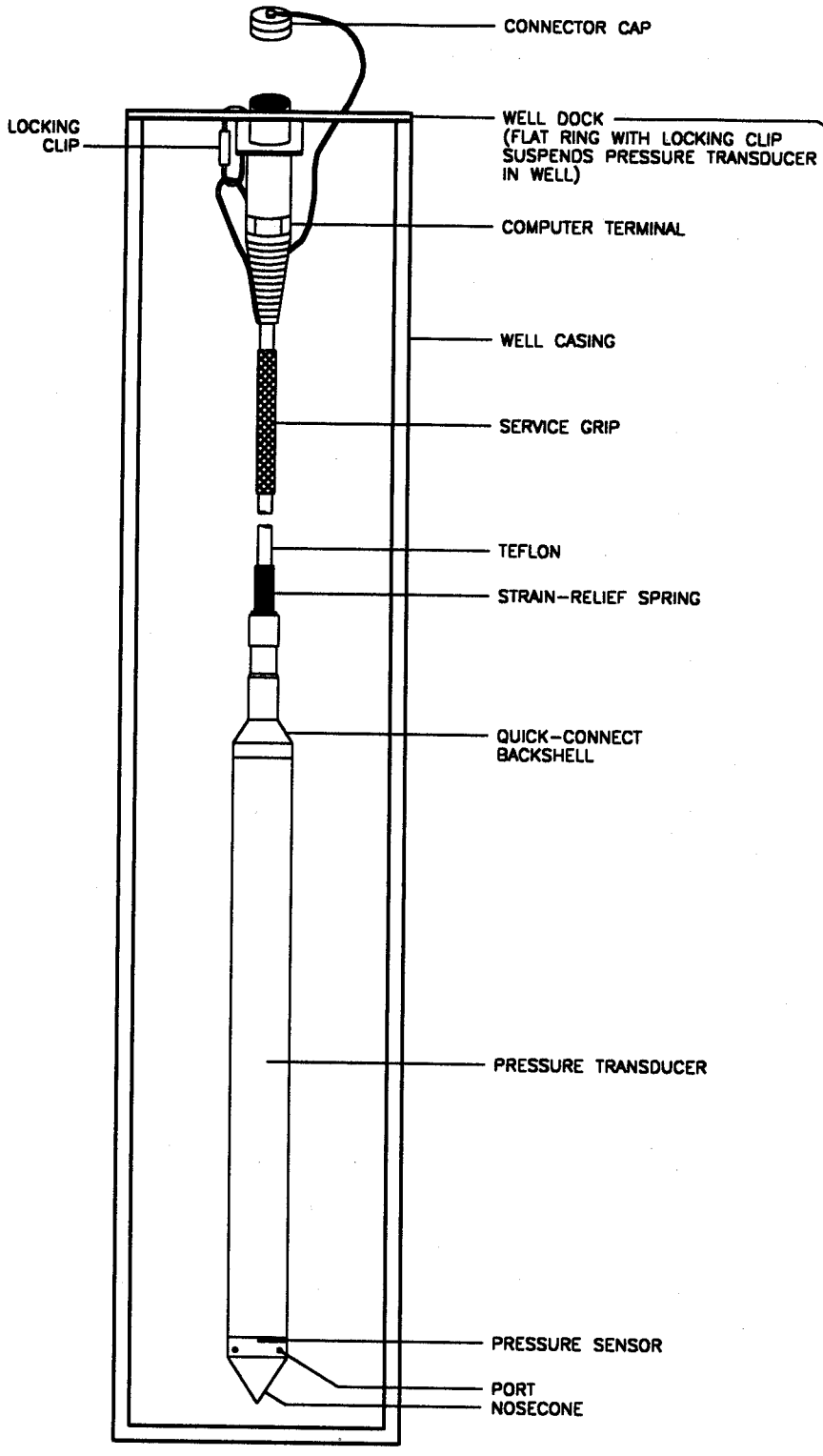

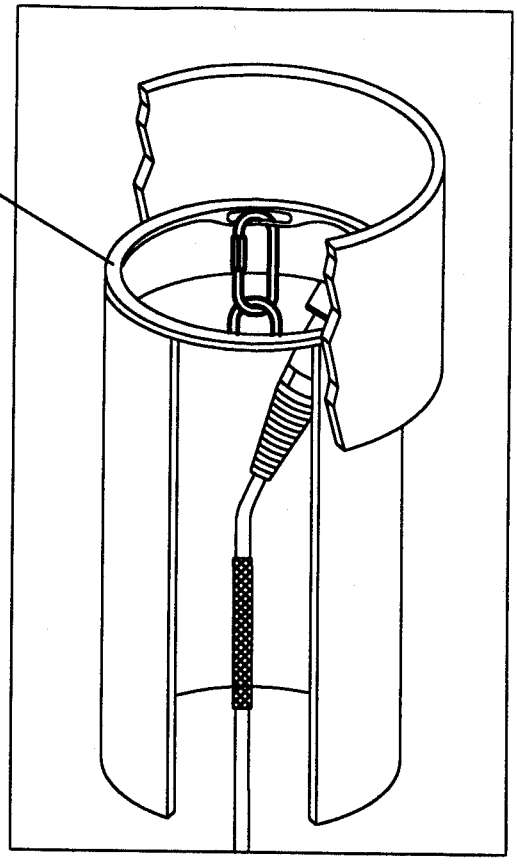

NOT TO SCALE

Prepared By: EDP
Checked By:

CALTRANS
DISTRICT 7
BMP PILOT PROGRAM

FIGURE: 5.4

LAW Crandall
LAWGIBB Group Member
A Division of Law Engineering and Environmental Services, Inc.

PRESSURE TRANSDUCER DETAIL

CONTRACT 43A0002C, TASK ORDER 6

D:\70300\80111\IT04.DWG

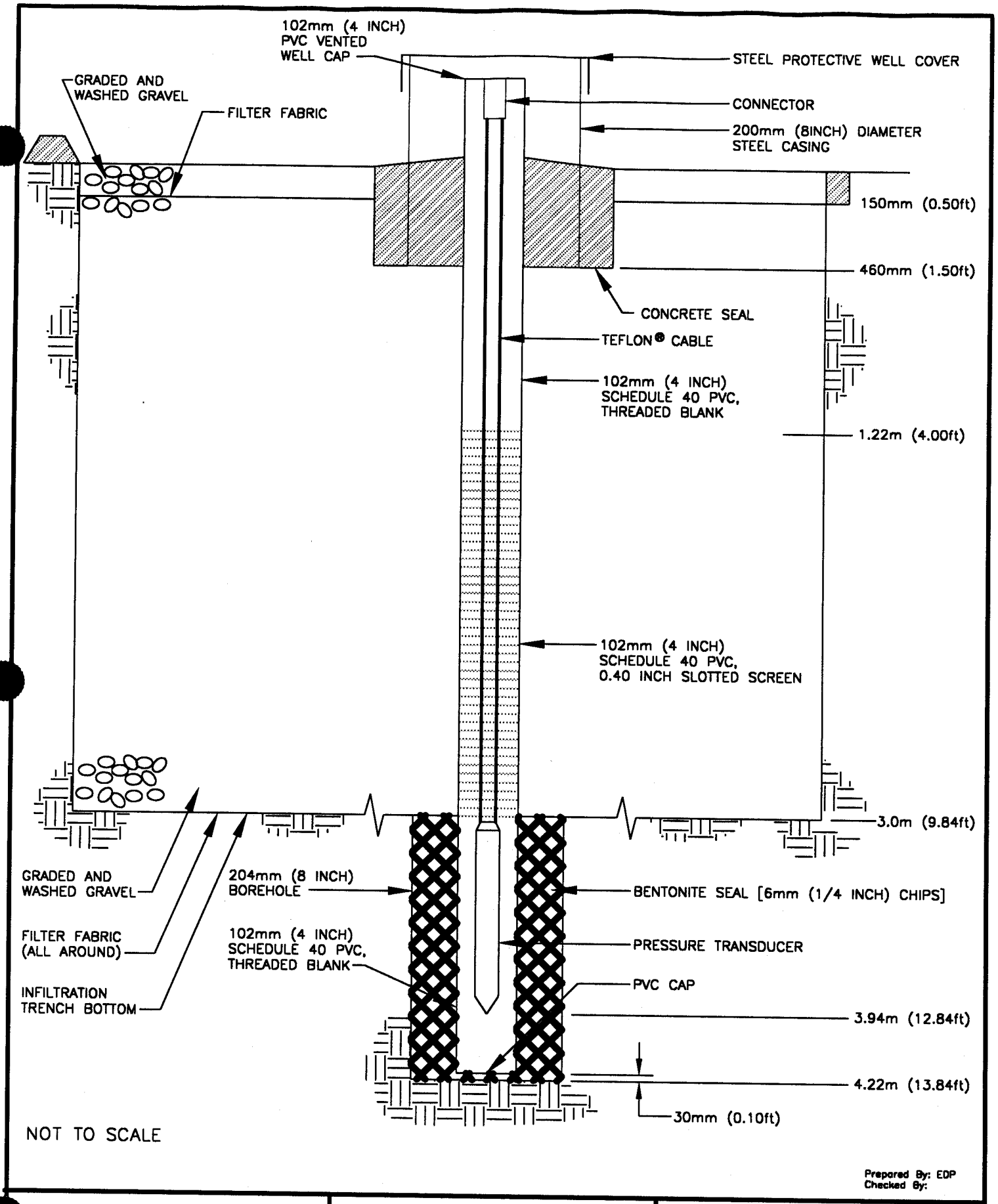

Prepared By: EDP
Checked By:

CALTRANS
DISTRICT 7
BMP PILOT PROGRAM

FIGURE: 5.5

LAW Crandall
LAWGIBB Group Member
A Division of Law Engineering and Environmental Services, Inc.

OBSERVATION WELL
CONSTRUCTION
DETAIL

CONTRACT 43A0002C, TASK ORDER 6

D:\70300\8 IT05.DWG

5.7 Preparation and Logistics for Storm Monitoring

Success of the sampling effort requires careful preparation and planning to assure that high quality stormwater runoff samples, water level measurements, vadose zone samples, and empirical observations are obtained in association with each storm event.

5.7.1 Weather Tracking

Weather tracking will be the responsibility of the Task Order Manager and Storm Control personnel. During the wet season, the weather will be continually monitored with increased frequency as incoming storm systems are predicted. Sources of weather information to be used to track incoming storms include the following: National Weather Service, Weather Watch Service, Weather Network (WeatherNet), public broadcast information available on the Weather Channel and local news stations, and radar and satellite images downloaded from the Internet (e.g., www.weather.com).

5.7.2 Mobilization and Staffing

A staffing plan, which designates personnel and equipment for each facet of storm monitoring, will be developed as soon as a potential storm event is forecast. Crews will consist of two individuals. The staffing plan will include the following information:

- Personnel needed for each position.
  - Storm Control.
  - Shift Leader.
  - Crew Chiefs.
  - Crew Assistants.

- Shift and zone (pilot facilities manned by a single crew) designations.
- Equipment mobilization.
- Communication channels.

5.7.3 Communication Channels

Communication channels will be established for personnel to contact each other before and during a storm event. A telephone tree will be used to facilitate contacting field personnel and other key individuals. Phone lists with home and work numbers and other key contacts will be made available to potential crew members. Two-way radio or cellular telephone communication links to field crews are essential for efficient monitoring.

5.7.4 Storm Monitoring Equipment

Equipment needed for stormwater sampling, vadose zone sampling, and infiltration rate monitoring includes the sampling equipment, sampling containers, safety equipment, personal rain gear, Storm Kits, and vehicles equipped with some type of mobile communications, and highway safety equipment (see lists). The necessary equipment will be loaded into the appropriate vehicles early in the storm preparation sequence.

Storm Kit Equipment List

- Electric vacuum pump
- Electronic water level meter
- Full set of keys (on floatable bobber)
- Flashlights (2)
- Maps for all required areas
- Screwdrivers
- Umbrella
- High quality alkaline D-cell batteries
- Spare sample labels
- Pencils and indelible markers
- Diagonal clipper
- Electrical tape
- Cable ties (assorted sizes)
- Utility knife
- Ziplock baggies (assorted sizes)
- Labeling tape
- Powder-free nitrile gloves
- Rubber bands

Storm Mobilization List

- Storm Kit
- Log books
- Paper towels
- Tape gun with clear tape
- Spare sample labels
- Ice scoop
- Sample control paperwork
- Extra fine indelible markers
- Appropriate sample bottles
- Coolers and ice
- Two-way radio or cellular phone
- Personal rain gear
- Any necessary safety gear

5.7.5 Biofiltration Strip Monitoring Station Preparation

Prior to a storm event, the Strip monitoring stations will be made ready to sample. This preparation includes entering the calculated “Volume-to-Sample” values, setting the autosampler and the data logger to sampling mode, pre-icing the sample bottles, and performing a general equipment inspection.

Determination of Volume-to-Sample

The latest weather forecast prior to each storm event will be examined to determine the proper "Volume-to-Sample" value to enter into the system. The amount of expected rainfall, how the station performed during the previous storm, and how much water is needed for analysis at the station for each storm event would be taken into consideration.

The "Volume-to-Sample" is entered as a number with units in cubic feet (cf). To determine this number, the drainage area in acres and the runoff coefficient, which is a number that reflects the permeability of the land in the study area. The following

equation will be used to determine the volume of water expected at a Strip for a given rainfall:

A x B x C x 3630 = volume in cf

Where:

A = inches of rain
B = drainage area in acres
C = runoff coefficient for land area
3630 = conversion factor: acre-inches to cubic feet

To determine how much water will pass the monitoring station between samples, divide this result by the number of samples needed to satisfy the water volume requirement for all analysis. Exhibit 9.2 in Tab 9 of the FGN indicates the "Volume-to-Sample" value needed to collect the correct sample amount of water for the amount of expected rainfall.

After the proper "Volume-to-Sample" value is determined, it will be entered into the system before the rainfall starts. The runoff value will generally be entered from the remote computer. The value can also be entered upon arrival at the site before the system has entered storm mode. It is important that this value is accurate as possible; if the value is too high, the system will not collect enough water to be analyzed, and if the value is too low, the system may sample too fast to be monitored effectively (i.e., the percent storm capture will drop).

Prepare Sampler

The autosampler will be reset and programmed to take 36 400-ml aliquots. Also other user-entered parameters (tubing length, head height, bottle size, composite sample, sample upon one pulse, and enabled liquid detector) will be set correctly.

During each site visit, the state of the System Status Flags (switches) and Program Signature will also be recorded. These provide important information on the current sampling mode and overall integrity of the site program.

Ice Sample Bottles

The sample bottles will be iced after the decision has been made to monitor the storm and prior to initial sample collection. If this is not possible, the bottles will be iced immediately upon the first visit.

General Inspection

A brief physical inspection of the equipment will be made to make certain that there are no obvious problems such as broken conduit or a kinked hose. If possible, the intake will be cleared of debris; at sites with confined entry access, this is only possible if the safety requirements listed in Appendix II are met.

Documentation

Upon each site visit, whether during storm mode or not, records of the visit will be accurately recorded on the field form (Form I in the *FGN*). Whenever possible, any data being recorded by the sampling system (for example, time or current stage) will be verified. Also, once during each site visit in wet weather, the Empirical Observation Checklist will be completed (Form H in the *FGN*).

General Visitation Data

During each station visit, several display locations will be recorded. The log sheets will be used as a guide to the proper display locations to record. The following data will be recorded at both the influent and effluent stations:

- Data logger or staff gauge.
- Velocity (ft/s).
- Q (flow in cfs).
- Station ID.
- Flow meter battery voltage.
- Cellular equipment battery voltage.

Storm Visitation Data

Additional data will be recorded in the logbooks during storm monitoring. The log sheet will be used to determine the necessary information. The following data are uniform for each station:

- Volume (cf)
  This is the volume of water that passed the station during the previous execution interval (one minute).
- Storm Sum
- This indicates the accumulated runoff volume in cubic feet (cf) that has passed the station since the last sample.
- Percent Storm Capture
  This indicates the percent of the storm effectively sampled by the system, and it provides a quick evaluation of the quality of the monitoring.

- Volume-to-Sample
  This value indicates the runoff volume (in cf) that will pass the station before the system will take the next sample.
- Sample Count
  This number indicates the number of samples taken in the current bottle. It automatically re-zeroes every time a bottle is filled.
- Total Rain (inches)
  The total rainfall in inches since the start of the storm. This is accumulated each time that the rain bucket tips.
- Max Flow (day)
  This indicates the Julian day on which the maximum flow occurred.
- Max Flow (time)
  When this number is positive, it indicates that the system was sampling during peak stage. If this number is negative, sampling did not occur during the peak stage because the bottles were full.
- Max Stage (feet)
  This indicates the height of the maximum stage during the current storm.
- Max Flow (cfs)
  This indicates the maximum flow rate during the current storm.
- Storm Volume (cf)
  This indicates the total volume of water that has flowed past the station since the beginning of the storm.
- Storm Volume Sampled (cf)
  This indicates the total volume of water that flowed past the station while the system has been in storm mode.

After all data have been recorded, the system will be placed in low power mode.

5.8 Biofiltration Strip Storm Monitoring

A priority objective of storm monitoring is to maximize the percent storm capture of the composite sample. This will be accomplished by changing out full sample bottles with empty ones. If all bottles do fill, the full sample bottles will be replaced and the system will be reset. To determine approximately when the bottles will fill and to ensure that the sampling process is not interrupted, the Storm Sum and the “Volume-to-Sample” will be evaluated. By examining how quickly the Storm Sum value is approaching the “Volume-to-Sample” value, the approximate time until the next sample is taken can be determined, as well as the approximate time until the bottles fill. The monitoring crew will be aware of the current status of each station in each of its BMP pilot facilities to determine which station will fill all bottles first so they can be onsite to change out filled bottles. If the station has been set for the amount of rainfall that actually occurs, changing the sample bottles will not be necessary. “Volume-to-Sample” settings will take into account the

volume of sample required to meet analytical needs. This study requires approximately 3 liters of sample to meet these needs.

The data logger pulses the autosampler to take a sample when the accumulated Storm Sum equals the "Volume-to-Sample". The storm sum is then reset to zero and the process is repeated. This continues until the storm ends or the bottles fill. Ideally, the "Volume-to-Sample" value will be accurate for the amount of anticipated rainfall, and the bottles will not need to be changed during the storm. If the rainfall is different than that predicted, the bottles may fill before the end of the storm. If this occurs, sampling will halt until the bottles are changed and the system is reset. While the system is reset, part of the storm is not being sampled, and the percent capture will show a decrease. It is therefore imperative that the system is reset and the sample bottles are changed immediately to maintain 100% storm capture.

5.8.1 Storm Procedure

Upon arrival at a station during a storm event the status of the sample bottles will be checked immediately. If it is not necessary to change the bottle at that time, the of the appropriate data on the log sheets will be recorded and the necessary physical measurements and observations will be taken. An approximate time that the bottles will fill will be determined, and, depending on how much time is available, the next station will either be visited or the team will wait until the bottles fill. If the sample bottles are full, the system will be reset immediately, and the bottles replaced. When the bottles have been changed, the necessary station data will be filled in on the field log sheets.

5.8.2 Sample Bottle Replacement

The removal of glass sample bottles from the sampler requires great care; the bottles are heavy when full and are very slippery when wet, as well as being expensive and fragile. Two people will be present to ensure the security of the bottles and of the sample itself. Extreme care will be taken not to kink the intake hose when handling the sampler.

The bottle numbers will be recorded in the logbook and each bottle will be labeled appropriately. When new bottles have been put in place, they will be re-iced and the sampler reset to continue sampling. Full bottles will be kept iced until composited.

5.8.3 Storm Monitoring Office

The main objective of the Storm Monitoring Office is to update field crews on the status of their stations. This will greatly reduce the amount of time a crew will spend driving during storms. The monitoring of stations from a remote computer consists of calling each station and recording certain data for evaluation. When it is determined that a sampling system is close to filling all bottles, a field crew will be called and alerted to the

status of the station. Remote interrogation of the storm stations will be logged using Form K in Tab 6 of the *FGN*.

Generally, the Storm Monitoring Office is also the storm control position. This means that critical decisions regarding the status of storm monitoring are made with input from the Storm Monitoring Office.

Therefore, this position requires awareness of the latest weather forecasts to make informed decisions on the continued monitoring of the storm.

5.8.4 Post-Sampling Procedures

After a storm event has ended, the stations need to be shut down. The station will be left ready for the next storm event in case there is insufficient time for a maintenance visit between storms. The following items will be taken care of, and will be well documented in the *FGN*.

- The storm monitoring program will be reset to prepare for another storm event.
- The sample bottles will be replaced and the sampler reset.
- The station will be physically inspected to determine if damage was sustained during the storm event. The flow sensor will be inspected to determine if it is blocked by debris, or the intake is clogged. (This is only possible if all confined space safety requirements are met).
- The data will be retrieved. This will be done via modem from either the remote monitoring computer or directly in the field using a laptop computer.
- Battery voltages will be checked; batteries that are low will be replaced.
- An Empirical Observation Checklist (Tab 6, Form H in the *FGN*) will be completed one time during the event.

Data Retrieval

Data will be retrieved (dumped) from the data logger after each storm event during the storm season, and approximately every month during dry weather.

Chain-of-Custody Forms

When the of the grab samples have been collected, the paperwork will be filled out to ensure a smooth transfer of samples to the analytical laboratory. Chain-of-Custody Forms will be filled out in detail describing the type of samples, the number of samples, and the times that the samples were collected. These forms will accompany the samples to the laboratory.

5.8.5 Evaluation

Upon termination of a storm monitoring event, evaluation of the influent and effluent stations' performance will be documented and reviewed before the samples collected are deemed valid. Evaluation of a monitoring station's performance is based on the answers to the following questions:

- Was the storm representative of the effectiveness range of the Strip?
- Was capture of peak flow or runoff achieved at both sampling points?
- Did the equipment perform as designed throughout the duration of the storm event?
- Did the samplers accurately collect equal and reliable storm sample aliquots?
- Did the Strip function as designed?

5.8.6 Grab Sampling

Total recoverable petroleum hydrocarbons (TRPH) and bacteria (Fecal Coliform) samples are unsuitable for collection by automatic means. TRPH is inappropriate because some material adheres to the surface of the tubing and the sample container. Automatic sampling for bacteria is inappropriate because the sampling equipment is not sterile after installation and exposure to the elements. Because these analytes are unsuitable for collecting using an automated approach, they will be collected as a grab sample from both the influent and effluent twice each storm monitoring year.

It is imperative that collected grab samples be transferred to a designated meeting location immediately after the sampling has been completed. Chain-of-Custody Forms for the samples will be completed and transport of the samples to the analytical laboratory will be coordinated to ensure that the samples are handled and analyzed within the proper holding times.

It is essential that the following sample handling protocols be followed when collecting grab samples to keep contamination to a minimum:

- Turn the vehicle engine OFF to minimize exposure of the sample to exhaust fumes.
- Keep the sample containers in clean coolers until sampling is actually initiated.
- Store the filled sample bottles in clean coolers at 4°C.
- Keep the bottle lid clean and free of debris while the bottle is open.

Grab samples will be collected during two storm events per monitoring season as near to the sampling point as possible. When unable to collect a sample near the intake, the sample will be collected as near the center of flow as possible or in an area of sufficient velocity to ensure good mixing. Both sampling points require a grab pole to collect the necessary grab samples. Sample bottles will be fitted snugly into the bottle holder and the bottles will be seated on the upstream side of the grab pole to reduce potential

contamination. The bottle will be filled with the mouth of the bottle faced into the current, if possible. Also, the bottle will be labeled before it is filled as it is nearly impossible to write on wet bottles, and the station I.D. will be listed on the bottle to coincide with the station sampled.

Each type of grab sample may require special treatment to ensure the quality of the sample and the safety of the sampler. The preservative in the sample bottles is usually a concentrated acid, so care will be taken that the preservative does not come into contact with the skin. Powder-free nitrile gloves will be worn when handling sample containers. Both types of grab samples are discussed below.

TRPH analyses will be performed for oil, diesel and gasoline fractions and reported separately for each. Samples to be analyzed for TRPH gasoline fraction will be preserved with a concentrated acid (HCl). The sample bottles will be filled to below the neck and just above the shoulder. The bottle will not be overfilled because the preservative will be washed out. If the bottle is just slightly overfilled, a small amount of sample will be poured off after the preservative has mixed with the sample. A small amount of headspace is required in the containers to allow for expansion if the sample freezes while iced during shipping. These grab samples will be collected as soon as possible after runoff is detected.

Fecal Coliform are preserved with a small sodium thiosulfate tablet. To retain the tablet while sampling, it will be removed from the container when it is dipped into the flow. The bacteria bottle will be turned over causing the tablet to fall onto the cap of the bottle; the cap will be removed and set somewhere that will prevent it from becoming contaminated (out of the rain). The sample bottle will be filled to the shoulder, the cap tipped so the tablet falls into the sample and the cap secured to the bottle. These grab samples will be collected once the entire tributary area contributes stormwater runoff (i.e., any time after 10 minutes of continuous flow past the sampling point).

5.9 Sample Tracking and Handling

Water samples will be kept properly chilled and transferred to the analytical laboratory within holding times to achieve the highest quality data possible. To ensure proper tracking and handling of the samples, documentation will accompany the samples from the initial pickup to the final extractions and analysis. This documentation includes the Chain-of-Custody Forms (see Form M in Tab 7 of the *FGN* for an example form). These forms or equivalent will be used to track and handle samples.

Samples collected, including the composite containers, will be labeled with the following information:

- Project name.
- Date.

- Time.
- Swale/Strip name and number.
- Matrix
- Influent or effluent sampling location.
- Preservative.
- Collector's initials.
- Sample I.D. number.
- Analyte(s) to be analyzed.
- Grab or composite sample.

The analytical suite for each station depends upon the total volume of water collected for the storm event. When insufficient volumes have been collected, Storm Control will need to approve the analysis of the stormwater. A Priority Analysis Sheet will be used in conjunction with a Sample Bottle Evaluation to determine the analytical suite for each station, based on the volume of water collected at that station, the Volume-to-Sample, and the percent storm capture. When the storm has been evaluated and samples from each station accounted for, a duplicate station and a QA/QC station will be selected by Sample Control based on stormwater volumes available. Duplicate and QA/QC samples will be prepared from the combined volume of the sample collected (i.e., from each of the sample bottles) at the selected duplicate and QA/QC station.

Duplicate and QA/QC sample bottles will be labeled, recorded on the Chain-of-Custody Form, and transported to the analytical laboratory.

Grab samples will be transported to the appropriate laboratory as soon as the grab sampling is completed, whereas the sample bottles for composite samples are transferred at the end of the storm event. Samples will be properly logged on the Chain-of-Custody Form and kept chilled in coolers. There will also be a field duplicate, a field blank, and extra water collected for QA/QC samples. These QA/QC grab samples will be collected at one of each consultant's BMPs during each storm event monitored. The sampling stations will be selected by Storm Control for collecting the duplicate grab samples. The crews monitoring the stations will be fully briefed on the procedures for collecting QA/QC samples, and will be familiar with the sample identification numbering scheme for these samples because they are to be submitted to the laboratory as blind samples. These samples will be labeled, recorded on the Chain-of-Custody Form, and transported to the analytical laboratory.

Each sample collected will receive a unique alphanumeric code (sample I.D. number) for tracking. This code will be standard for all samples and contain information as to the station, date, and sequential monitoring event number. The following is an example of this code:

SITE No.-IN-32898-001

Where:

Site No. = Site number of BMP site.
IN = Influent sampling point at the site; EF = effluent sampling point.
32898 = Julian day and year
001= First storm event monitored during this program at this location

If multiple bottles are used or needed, the last data field will indicate the bottle number and the total bottles in that sampling event (i.e., 001-1/3, 001-2/3, 001-3/3 for a three-bottle collection scheme).

A set of QA/QC samples will be provided with each type of sample analyzed for each storm event. The analytical laboratory may also require additional QA/QC samples if one type of analysis is to be run in more than one batch.

Blank samples, duplicate samples, MS/MSDs, and replicate/splits need not all be from the same station. However, per storm event (or batch run), these QA/QC samples will be analyzed for the standard analytes as field samples. Most field QA/QC samples are submitted blind to the analytical laboratory, however, additional sample volumes provided to the laboratory for laboratory replicates or matrix spikes and matrix spike duplicates will be clearly identified. The main types of QA/QC samples that will be utilized for this study are as follows:

Duplicate Analyses - These analyses will be performed for both grab samples and composite samples and will require an additional set of sample containers to be sub-sampled. The results will allow evaluation of sampling error introduced by both field sampling and laboratory analyses by showing the reproducibility of the sample collection and analyses. Duplicate samples will be sent “blind” to the laboratories. One duplicate sample will be collected from one of each consultant’s sampling locations during each storm event sampled and analyzed for the full list of analytes.

Duplicate samples will be identified by adding 500 to the sequential storm event number. For example, a duplicate sample for the site identified above will be:

SITE No.-IN-32898-501

Blanks - These are for field as well as laboratory samples. Blanks help verify that the equipment and the sample containers are not contaminated, and the sampling techniques used are non-contaminating. Sample bottles, Teflon® tubing, and filters will be rinsed with reagent grade analyte free deionized water separately. The collected rinsates will be analyzed for the full list of analytes for the composited samples. Blanks will also be run on the analytical equipment. Rinsate blanks will be run on two samplers used by each

consultant at one of their BMPs prior to the installation of the equipment. Each time a batch of composite bottles is cleaned, five percent of those bottles will be blanked. Each time a batch of filters is purchased five percent of those filters will be blanked.

Equipment rinsate blanks will be identified by adding 600 to the sequential storm event number. For example, an equipment rinsate blank collected from the monitoring equipment from the site identified above will be:

SITE No.-IN-32898-601

Field blanks will be identified by adding 700 to the sequential storm event number. For example, a field blank collected at the site identified above will be:

SITE No.-IN-32898-701

Matrix Spike and Matrix Duplicate Spike (MS/MSD) - The laboratory will require additional sample volumes for analyses that require matrix spikes and matrix spike duplicates to evaluate precision and accuracy of the laboratory analytical method, and to evaluate any matrix interference. MS/MSDs are analyzed for their analyte(s) and then spiked with a known amount of analyte(s). One MS/MSD sample will be run on metal and TRPH samples from one of each consultant's sampling locations during each storm event sampled.

MS/MSD samples will be indicated on Chain-of-Custody Forms by clearly identifying that the sample is for MS/MSD purposes.

Laboratory Replicate/Split - This QA/QC analysis will require additional sample volumes. It is a duplicate analysis performed on the same sample and evaluates the repeatability (precision) of the analytical laboratories' results. One split sample will be run from one of each consultant's BMP sampling locations during each storm event sampled and analyzed for the full list of analytes.

Laboratory Replicate/Split samples will be indicated on Chain-of-Custody Forms by clearly identifying that the sample is for Laboratory Replicate/Split sample purposes.

5.10 Laboratory Selection, Sample Container Preparation, and Analytical Methods

5.10.1 Laboratory Selection

The selected laboratories have extensive experience with environmental samples and have the ability to provide rapid response to meet critical holding time requirements for analytes requiring expeditious analysis. Laboratories are certified by the California

Department of Health Services for the requested analyses. Refer to Tab 2 in the *FGN* for specific laboratory listings.

5.10.2 Holding Times, Sample Bottles, and Preparation

The laboratories will be responsible for providing appropriate sample containers and, when necessary, with preservatives for each analysis. Tables 5.1 and 5.2 provides a summary of sample volumes required for each analysis, along with the types of containers, holding times, and preservative. Because additional volumes are necessary for laboratory QA/QC, sample containers will provide at least twice the volume necessary to perform the requested analysis. The volume of the stormwater composite from each site is often the critical factor in determining the volume of sample that can be provided to the laboratory. The Project Task Order Manager and/or Storm Control personnel, in conjunction with the laboratories, will determine the allocation of sample volume for different analyses if sample volumes are not adequate to provide needed volume for each analysis. Table 5.1 lists the analyses along with a Priority Ranking. Also listed on Table 5.1 are the analytical methods and reporting limits.

Coliform bacteria samples have critical holding time requirements. The analysis will be started within 6 hours. This will require close coordination between the laboratory and the sampling team to assure that this analysis is completed within holding time. With composite samples, the start of holding times is considered to be the time that the last aliquot was sampled.

Attempts will be made to maintain the 6-hour holding time for bacteria to the extent practical. However, storm field conditions or safety concerns may prove this holding time infeasible. A maximum holding time of 24 hours will be followed, in accordance with "Standard Methods for the Examination of Water and Wastewater," 18th Edition.

5.10.3 Project Reporting Limits

Recommended analytical methods and reporting limits for this project are listed in Tables 5.1 and 5.2. The reporting limits in these tables are target reporting limits. In some cases, reporting limits may need to be adjusted due to limited sample volumes or potential matrix interference. In such cases, appropriate data qualifiers will be applied to the associated data.

5.10.4 Laboratory Data Package Deliverables

Laboratories will be required to provide a three-week turnaround on deliverables. The deliverable package will include a hard copy and electronic data files. The hard copy will include standard narratives identifying any analytical or QA/QC problems and corrective actions. The electronic data files will contain information found in the hard copy reports submitted by the laboratories. Individual data sets will be submitted as either Microsoft Excel® Workbook files or as Microsoft Access® database files. Each consultant will be responsible for laboratory coordination and data management. Data management will be consistent with the Caltrans Data Management Plan – Data Reporting Protocol and Database," DOC. I.D. CTSW-TM-98-005.

.

Table 5.1
Stormwater Matrix
Analytical Parameters, Methodologies, Reporting Limits, Holding Times, Container Volumes and Types, and Preservation

Analyte	Priority Rank	Reporting Limit	Units	Analytical Technique	Method Number	Holding Time	Minimum Sample Volume	Preferred Volume and Container Type[1]	Preservation
Conventionals									
pH	1	0.1	Unit	Electrode	EPA 150.1	Immediately[2]	100 mL	1-100 mL glass/plastic	4°C
Specific Conductance	1	1.0	µmhos/cm	Electrometric	EPA 120.1	Immediately[2]	500 mL	1-500 mL glass/plastic	4°C
Hardness	5	2	mg/L	Titrimetric/ Colorimetric	EPA 130.2	6 months	100 mL	1-200 mL glass/plastic	HNO_3 to pH<2, 4°C
Total Suspended Solids	1	1	mg/L	Dried Filter Weight	EPA 160.2	7 days[3]	1 L	1-500 mL glass/plastic	4°C
Nutrients									
Nitrate-Nitrogen	2	0.01	mg/L	Colorimetric Ion Chromatography	EPA 353.3 EPA 300.0	28 days 48 hours	200 mL 200 mL	1-500 mL plastic 1-500 mL plastic	4°C and H_2SO_4 to pH<2 4°C
Total Kjeldahl Nitrogen	3	0.1	mg/L	Titrimetric/ Colorimetric	EPA 351.3	28 days	500 mL	1-1L plastic	4°C and H_2SO_4 to pH<2
Total Phosphorus	4	0.002	mg/L	Colorimetric	EPA 365.3	28 days	100 mL	1-250 mL plastic	4°C and H_2SO_4 to pH<2
Total/Dissolved Metals[4],[5]									
Copper	1	1	µg/L	ICP-MS	EPA 200.8	6 months	2 @ 500 mL	2-1L plastic	4°C and HNO_3 to pH<2 and filter
Lead	1	1	µg/L	ICP-MS	EPA 200.8	6 months	2 @ 500 mL	2-1L plastic	4°C and HNO_3 to pH<2 and filter
Zinc	1	1	µg/L	ICP-MS	EPA 200.8	6 months	2 @ 500 mL	2-1L plastic	4°C and HNO_3 to pH<2 and filter
Organics[6]									
Total Petroleum Hydrocarbons – Diesel/Oil	Grab	250/200	µg/L	GC	EPA 8015M	14 days	1 L	2-1L amber glass	4°C
Total Petroleum Hydrocarbons - Gasoline	Grab	50	µg/L	GC	EPA 8015M	14 days	2-40 mL	3-40 mL VOA vials	4°C, HCl to pH<2
Bacteria[6]									
Fecal Coliform	Grab	2	MPN/100 mL	Multiple-tube	SM 9221E	6 hours[7]	50 mL	1-100 mL plastic	4°C

1. Analytes with the same preservative can be combined into a single container if the same laboratory is performing the analyses.
2. pH and Specific Conductance will be measured by the laboratory immediately upon receipt of the samples.
3. 7 days based upon limit for measuring TSS/no regulatory limit.
4. Total and dissolved metals samples are collected in separate containers. Only the total metals container will receive nitric acid.
5. Dissolved metals will be filtered in the laboratory prior to acidification.
6. Total Petroleum Hydrocarbon and Fecal Coliform grab samples will be collected for two storms per year.
7. Attempts will be made to maintain the 6-hour holding time for bacteria samples to the extent possible. When not possible, a maximum holding time of 24 hours will be followed in accordance with "Standard Methods for the Examination of Water and Wastewater", 18th Edition.

Table 5.2
Vadose Zone Matrix
Analytical Parameters, Methodologies, Reporting Limits, Holding Times, Container Volumes and Types, and Preservation

Analyte	Priority Rank	Method Reporting Limit	Units	Analytical Technique	Method Number	Holding Time	Preferred Volume and Container Type[1]	Preservation
Dissolved Metals[2]								
Copper	1	1	µg/L	ICP-MS	EPA 200.8	6 months	1 100 mL plastic	4°C and HNO_3 to pH<2 and filter
Lead	1	1	µg/L	ICP-MS	EPA 200.8	6 months	1 100 mL plastic	4°C and HNO_3 to pH<2 and filter
Zinc	1	1	µg/L	ICP-MS	EPA 200.8	6 months	1 100 mL plastic	4°C and HNO_3 to pH<2 and filter

1. Analytes with the same preservative can be combined into a single container, if the same laboratory is performing the analyses.
2. Dissolved metals will be filtered in the laboratory prior to acidification.

5.11 Sediment Sampling

As part of the maintenance program, sediment will be removed from the BMP when flows are hydraulically impeded. It is anticipated that sediment will accumulate relatively slowly over time. However, should sediment deposit in a rapid manner, an intermediate step of stockpiling may become necessary before offsite disposal. Section 5.11.1 provides procedures to be used when assessing potential sediment contamination in the event that intermediate onsite storage is necessary.

This subsection describes the sample collection procedures and analyses for assessing the quality of sediment removed from an IT for disposal. Evidence of oil and grease, antifreeze, solvents, fuel, hydrogen sulfide, and any other noxious substance will be noted. Observations will be used to determine if more than the standard list of analytes is required. Observations will be documented on a checklist form (Form G in the FGN). The standard list (Table 5.3) is based on highway contaminants that have the potential to exceed hazardous waste criteria. After laboratory analysis, results will be compared to regulatory limits listed in California Code of Regulations (CCR) Title 22, Section 66261.24 and Department of Toxic Substances Control (DTSC) variances. Based on this evaluation, proper disposal methods will be chosen.

5.11.1 Sediment Collection

Procedures in EPA Publication *Test Methods for Evaluating Solid Waste, Physical/Chemical Methods (SW-846)* provide a method for determining the mean concentration of a given contaminant within a soil mass and the appropriate number of samples necessary to calculate this mean to the specified confidence interval. Initial sampling will generate a minimum number of samples/analyses as described below. Additional sample analyses may be required to meet the confidence levels given in *SW-846*, therefore archiving of samples will be necessary. Archived samples will be appropriately preserved and analyzed within the maximum holding time specified in Table 5.3. None of the samples will be allowed to be composited. The Quality Assurance/Quality Control (Appendix III) describes the QA/QC objectives for sediment samples. The minimum number of discrete samples initially required is given below. The log shown as Form G in Tab 5 of the *FGN* will be used to document sediment collection.

- Drums: A minimum of one sample will be collected from each drum.
- Stockpiles less than 10 cubic yards: A minimum of two samples will be collected, one from each half of the stockpile. Sampling points will be selected randomly within each half.
- Stockpiles from 10-20 cubic yards: A minimum of three samples will be collected, one from each third of the stockpile. Sampling points will be selected randomly within each third.

- Stockpiles from 20-100 cubic yards: A minimum of four samples will be collected, one from each quarter of the stockpile. Sampling points will be selected randomly within each quarter.
- Stockpiles from 100-500 cubic yards: A minimum of one sample for each 25 cubic yard portion will be collected. The stockpile will be sectioned into 25 cubic yard portions to obtain a minimum of one sample for each 25 cubic yard portion. Sampling points will be selected randomly within each 25 cubic yard portion of the stockpile.

Random samples will be selected from locations on a three-dimensional grid. If the presence of materials such as boulders, debris, etc. hinder this process, the sample will be collected as close as possible to the randomly selected point without altering the essence of the random selection process. The following steps will be used to collect sediment samples:

1. Don powder-free nitrile gloves.
2. Locate the sample point in the stockpile or drum.
3. Collect the sample using a soil probe or equivalent. Ensure that the sample is collected at the correct depth and location that was randomly selected.
4. Fill one 8-ounce glass jar with a portion of the sample and close the container with the cap, using care not to aerate (volatilize) the sample. This jar will be labeled and analyzed for TPH and VOCs.
5. Homogenize the other portion of the sample in a disposable bowl using a disposable spatula or spoon. Fill a second 8-ounce glass jar with this portion of the sample and close the container with the cap. This sample will be labeled and analyzed for metals.
6. Wipe the outside of each sample container with a clean paper towel.
7. Record the sampler's initials, date, and time on the pre-labeled sample bottle.
8. Place the sample containers in individual zip-top plastic bags and seal the bags.
9. Immediately pack the samples into a chilled cooler.
10. Record the required information on the Chain-of-Custody Form.
11. Document the sampling event, recording information in the designated field logbook.
12. Repeat the above steps until the minimum number of samples has been collected.

5.11.2 Sediment Analyses

Unless observations indicate additional testing, the sediment samples submitted to the laboratory will be analyzed for the list of analytes in Table 5.3 using Title 22 criteria (State of California, 1985). This table also lists the required reporting limits, analytical holding times, required preservation, and container sizes and types. Laboratory turn around times and data deliverables will be the same as those for the stormwater samples.

Table 5.3
Sediment Matrix (Disposal)
Analytical Parameters, Methodologies, Reporting Limits, Holding Times, Container Volumes and Types, and Preservation

Parameter	Method	Units	Reporting Limit	Maximum Holding Time	Preservation	Container Size/Type(1)
Total Petroleum Hydrocarbons (TPH)	EPA 418.1	mg/kg	10	28 days	4^oC	8 oz glass jar
Volatile Organic Compounds	EPA 8260B	mg/kg	SW – 846 (5) requirements	14 days	4^oC	8 oz glass jar
California Code of Regulations (CCR), Title 22 Metals(2):	EPA 6020/7471	mg/kg	SW – 846 (5) requirements	180 days 28 days for mercury	4^oC	8 oz glass jar
California Code of Regulations (CCR), Title 22 Waste Extraction Test (WET) Metals(3):	STLC Extraction	mg/L	SW – 846 (5) requirements	180 days 28 days for mercury	4° C	NA
Toxicity Characteristic Leaching Procedure (TCLP) Metals(4):	TCLP 1311	mg/L	SW – 846 (5) requirements	180 days 28 days for mercury	4° C	NA

(1) Each sample will be collected in two 8 oz glass jars
(2) California Code of Regulation (CCR), Title 22 Metals (Sb, As, Ba, Be, Cd, Cr (total), Co, Cu, Hg, Pb, Mo, Ni, Se, Ag, Tl, V, and Zn). Initial waste characterization results may lead to a shorter list of metals for subsequent sediment disposal.
(3) Any sample for total metals that are below the Total Threshold Limit Concentration [TTLC] but exceed the ten times Soluble Threshold Limit Concentration (STLC) will be further analyzed using the WET procedure. WET extracts will be analyzed only for metals which exceed the ten times STLC criteria. Sediments associated with total metal results that exceed TTLC values are automatically considered hazardous and therefore do not need to undergo the WET procedure.
(4) If any of the WET-soluble concentrations are equal to or greater than the TCLP regulatory thresholds, analyze the waste by TCLP.
(5) "Test Methods for Evaluating Solid Waste, Physical /Chemical Methods". SW-846, Update III.(SW-846)

5.12 Empirical Observations

5.12.1 Purpose of Empirical Observations

Performance assessments of BMP facilities cannot be fully ascertained through analytical methods. "Empirical" observations are also critical in determining the overall performance of implemented water quality management practices and in ensuring that the practices are maintained at optimum levels. Other factors such as maintenance activities, environmental variability, and physical processes, which cannot be determined analytically, can greatly influence the performance of a particular BMP. Some of these factors such as rainfall quantity and rainfall intensity can, and, will be assessed through physical measurements. Other components such as trash build-up, sediment deposition, and runoff appearance can be best assessed through careful documented observations.

5.12.2 Guidelines

Observations will be succinct but also complete. For a Strip/IT performance evaluation, the following observations will be made:

- Meteorological characteristics (present and preceding period).
- Hydrologic and hydraulic characteristics (flowing and/or standing water, channelization).
- Inlet conditions (problems affecting performance).
- Water quality appearance (visual, olfactory).
- Solids deposition (trash and debris, sediments, organics) and resuspension.
- Erosion.
- Vegetation condition.
- Outlet conditions (problems affecting performance).
- Mosquitoes and vectors.
- Structural condition of facility.
- Monitoring equipment condition.
- Infiltration medium condition (surface and observation well).

5.12.3 Checklist for Sampling and Monitoring Personnel

Form H in Tab 6 of the *FGN* provides a checklist (log form) that will be completed by sampling and monitoring personnel during every visit to the facility during wet weather or, at a minimum, once per month.

6.0 REFERENCES

Eaton, A.D., L.S. Clesceri, and A.E. Greenberg, eds. 1992. Standard Methods for the Examination of Water and Wastewater,18th Edition. American Public Health Association, American Water Works Association, and the Water Environment Federation.

Larry Walker and Associates. 1997. Guidance Manual: Stormwater Monitoring Protocols. Prepared for California Department of Transportation, Sacramento, CA. August 15, 1997.

Robert Bein, William Frost and Associates. 1997. Scoping Study, Retrofit Pilot Program, Caltrans District 7. Calif. Dept. Trans., Sacramento, CA.

USEPA, Test Methods for Evaluating Solid Waste, Physical/Chemical Methods, SW-846, Final Update III, June 1997.

Watershed Management Institute. 1997. Operation, Maintenance, and Management of Stormwater Management Systems. Watershed Management Institute, Ingleside, MD.

State of California 1985. California Code of Federal Regulation, Title 22, Article 11. Criteria for the identification of hazardous and extremely hazardous wastes. Register 85, No. 3.1-12-85, Para. 66693-66796, pp. 1800.75-1800.86.

CALTRANS
BMP RETROFIT PILOT PROGRAM

DISTRICT 7, LOS ANGELES

BMP OPERATION, MAINTENANCE, AND MONITORING PLAN

VOLUME II

APPENDIX I-E
BIOFILTRATION SWALES AND STRIPS

September 1999

TABLE OF CONTENTS

Section **Page E-**

1.0 INTRODUCTION 1
1.1. Retrofit BMP Description 1
1.2. Evaluating BMP Performance 2
1.3. Deployment Criteria 2
1.4. Data Collection and Compilation 3
1.4.1. Data Requirements 3
1.4.2. Data Management 4
1.4.3. Data Analysis 4
1.5. Encroachment Permit and Restrictions 5

2.0 OPERATION AND MAINTENANCE 6
2.1. Operation and Maintenance Needs 6
2.2. Inspection Frequency 6
2.3. Aesthetic and Functional Maintenance 6
2.3.1. Aesthetic Maintenance 6
2.3.2. Functional Maintenance 7
2.4. Maintenance Frequency 9
2.5. Equipment, Resources, and Tools Needed 9
2.6. Debris and Sediment Disposal 10
2.7. Hazardous Waste 11
2.8. Checklists for Inspectors and Operation and Maintenance Personnel 11

3.0 VECTOR CONTROL AND MANAGEMENT 12

4.0 VEGETATION MANAGEMENT 13
4.1. Management for Optimal BMP Performance 13
4.2. Management for Optimal Vector Control 13
4.3. Maintenance Requirements 13
4.4. Checklists 14

5.0 SAMPLING AND MONITORING 15
5.1. Equipment Installation 15
5.1.1. Water Quality Samplers 16
5.1.2. Flow Monitoring 17
5.1.3. Rain Gauge 17
5.1.4. Power 18
5.1.5. Telecommunications 18
5.1.6. Equipment Enclosures 18

TABLE OF CONTENTS (continued)

Section **Page E-**

5.2. Maintenance and Calibration 18
5.3. Preparation and Logistics 19
5.3.1. Weather Tracking 19
5.3.2. Mobilization and Staffing 19
5.3.3. Monitoring Station Preparation 21
5.4. Storm Monitoring 24
5.4.1. Storm Procedure 24
5.4.2. Sample Bottle Replacement 25
5.4.3. Storm Monitoring Office 25
5.4.4. Post-Sampling Procedures 25
5.4.5. Evaluation 26
5.4.6. Grab Sampling 26
5.5. Sample Tracking and Handling 28
5.6. Laboratory Selection, Sample Container Preparation, and Analytical Methods 31
5.6.1. Laboratory Selection 31
5.6.2. Holding Times, Sample Bottles, and Preparation 31
5.6.3. Project Reporting Limits 32
5.6.4. Laboratory Data Package Deliverables 32
5.7. Sediment Sampling 34
5.7.1. Sediment Collection 34
5.7.2. Sediment Analyses 35
5.8. Empirical Observations 37
5.8.1. Purpose of Empirical Observations 37
5.8.2. Guidelines 37
5.8.3. Checklists for Sampling and Monitoring Personnel 37
5.9. Hydraulic Residence Time Evaluation 38

6.0 REFERENCES 39

TABLE OF CONTENTS (continued)

TABLES

2.1 Waste Disposal Services in Southern California
5.1 Stormwater Matrix Analytical Parameters, Methodologies, Reporting Limits, Holding Times, Container Volumes and Types, and Preservation
5.2 Sediment Matrix (Disposal) Analytical Parameters, Methodologies, Reporting Limits, Holding Times, Container Volumes and Types, and Preservation

FIGURES

1.1 Cross-section of a Biofiltration Swale

1.0 INTRODUCTION

The Caltrans Best Management Practice (BMP) Retrofit Pilot Program is a comprehensive water quality monitoring study to evaluate the removal of contaminants in stormwater runoff from Caltrans roads and facilities through a series of BMP pilot installations. The overall objectives of this portion of the program are to document BMP contaminant removal efficiency and technical feasibility.

This Appendix of the Operations, Maintenance, and Monitoring Plan (OMM) applies to Biofiltration Swales and Strips (Swales/Strips). Refer to the consultant's monitoring equipment manuals and stormwater monitoring Standard Operating Procedures (SOPs) for details related to equipment installation, equipment maintenance, and storm monitoring. Maintenance, safety, documentation, and storm monitoring tasks will be carried out according to the procedures detailed in this plan. Additional measures may be necessary due to unforeseen or temporary changes to the work environment at these sites.

1.1 Retrofit BMP Description

Biofiltration Swales/Strips remove pollutants from stormwater runoff as it flows through the vegetated system by filtration, infiltration, adsorption, ion exchange, and biological removal. Swales are conveyances (typically trapezoidal channels) where the flow passes through vegetation at some specified depth (see Figure 1.1). Filter Strips are broad vegetated surfaces, which receive and discharge flow in relatively thin sheets.

Both Swales and Strips are designed to treat stormwater runoff during "water quality storm events" (defined as up to the 1-year, 24-hour peak flows). Runoff hydraulic residence times through these swales and strips during a "water quality storm event" are typically nine minutes. No mechanism is provided to divert flows around the swales or strips in excess of "water quality storm events".

Figure 1.1 Cross-section of a Biofiltration Swale

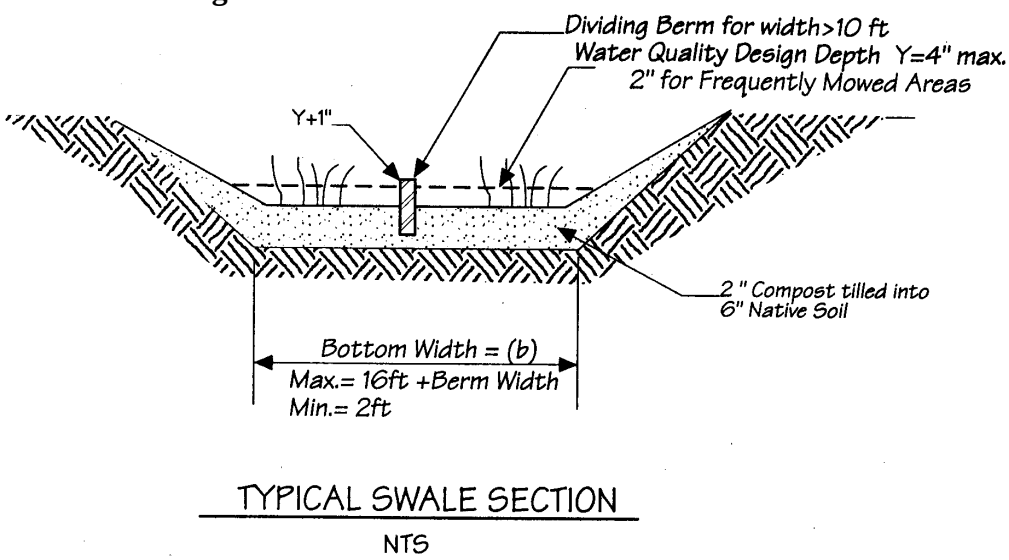

1.2 Evaluating BMP Performance

To effectively evaluate the performance of a Swale/Strip pilot facility, the following objectives will be met:

- Determine the quantity of runoff treated by the BMP.
- Determine the reduction (or change) in analyte concentrations between the influent and the effluent from the BMP.
- Determine and document the level of effort required to maintain the BMP at optimal effectiveness (i.e., treatment of stormwater runoff for storm events producing up to the 1-year, 24-hour peak flow).
- Determine and document the level of effort required to control vectors of human disease and nuisance insects, rodents, and vegetation at the BMP.
- Determine and document BMP performance evaluation criteria relative to the qualitative benefits of the BMP.

To effectively estimate the removal of contaminants from a Swale/Strip, the quantity and quality of runoff entering the Swale/Strip will be compared to the quantity and quality of water discharged from the Swale/Strip. These data will allow a direct estimate of the total reduction in mass loadings for a variety of contaminants.

The effectiveness of a Swale/Strip is also related to the implementation of maintenance procedures and the documentation of empirical observations. Items such as erosion and bank stability, vegetation height, trash and sediment build-up, and infiltration capability may directly affect the performance of a Swale/Strip as a stormwater treatment facility.

1.3 Deployment Criteria

Stormwater samples will be collected from the Swale/Strip for up to eight storm events over two wet seasons, weather permitting. Storms targeted for sampling will be separated by a minimum of 48 hours (72 hours preferably). The facility will be inspected per the guidelines given in Section 4.0 of the *Field Guidance Notebook* (*FGN*) which include a mandatory inspection after every storm with rainfall greater than 0.50 inches.

Based on the rainfall requirements needed to generate monitorable flows in and out of the pilots, Caltrans has developed a refined monitoring team deployment criteria. The refined deployment criteria defines when to chase storms based on season, storm forecasts, and the current count of successfully monitored storms.

The deployment season, in which monitoring teams remain "on-call" and fully staffed, will be restricted to the portion of the year when rainfall is most probable and better predictable. Summer showers are not seen as predictable events, and dry watersheds and BMPs will retain more water, which results in less effluent.

The deployment season will start on October 1. The season shall end after 3 weeks of dry weather where less than 0.2" of rainfall occurs in the San Diego or LA areas, but end no sooner than April 1 and not later than May 30th. This approach will provide a plan that adjusts to wet or dry springs.

The following criteria will decrease false starts, while allowing teams to continue to chase storms based on promising storm forecasts. The criteria will be used for all pilots, regardless of drainage area size or land use.

“Forecast-Unlikely” set to less than 0.25” rain and less than 50% probability, (Decision = "No Go")

“Forecast-Marginal” set to 0.25” or greater and 50 –75% probability, (Caltrans Decision)

“Forecast-Highly Probable” set to 0.25” or greater and greater than 75% probability. (Decision = "Go")

Forecast information will be gathered as indicated in the OM&M manuals (e.g., internet sources). As always, if conditions happen to allow paired samples to be successfully taken for any storm larger than 0.1", that sampling would be considered as a successful event, which would count towards fulfilling Scoping Study requirements.

When a specific pilot is successfully monitored for the total required storms per the applicable Scoping Study, the decision to further deploy to monitor that pilot will fall to Caltrans and no commitment to monitor beyond the terms of the Scoping Studies can be made at this time.

1.4 Data Collection and Compilation

1.4.1 Data Requirements

The following data will be collected to assess the performance and maintenance aspects of a Swale/Strip:

- Water quality and quantity data of runoff into and discharge from the Swale/Strip from flow-composite and first-flush (as soon as possible after the start of runoff) grab samples for at least eight storm events during two wet seasons, weather permitting.
- Rainfall data, recorded as a function of time, from rainfall events during the study period.
- Determination of the hydraulic residence time using dye tracing.
- Observations of water quality, weather, antecedent conditions, spills, etc.
- Documentation records of inspections and maintenance activities performed.
- Vector monitoring data.
- Records of vector control measures taken.
- Vegetation management records.

1.4.2 Data Management

Consultants will be responsible for data management. Overall management of the data will be consistent with established Caltrans procedures for stormwater monitoring projects and this manual.

The consultant's Sample Control Section will be responsible for tracking the analytical process to assure that laboratories are meeting the required turnaround times and are providing a complete deliverable package. Sample Control will also be responsible for accumulating copies of site visit logs, inspection logs, facility maintenance records, vector control sampling data, and logged rainfall and hydrographic data. Sample Control will receive the original hard and electronic copies from the laboratory, system managers, and field crews, and verify completeness and log dates of receipt. A copy of the data sets and log sheets will be filed in Sample Control's central filing system and another copy will be provided to the consultant's Database Manager. The originals will then be transferred to the Task Order Manager and filed with other project documentation to maintain complete project records.

Laboratories, system managers, and vector control crews will provide data in both hard copy and electronic formats. The forms of electronic submittals will be provided to the laboratories to ensure that the files can be imported into the project database with a minimum of editing. A relational database will be used for data. Laboratory data will be maintained and managed using Microsoft Excel® and Microsoft Access®. Files from the influent and effluent monitoring stations will be stored in the same database system and be linked to the laboratory database. The sampling system files will include rainfall, sampling, and flow data. Site characteristics will be stored in a separate file and linked to both the chemical and sampling system files to enable useful data queries.

Data will be submitted to Caltrans in accordance with "Caltrans Statewide Data Management Plan—Data Reported Protocol and Database," a technical memorandum dated 23 April 1998 from Larry Walker Associates to all Task Order Managers.

1.4.3 Data Analysis

Differences in storm characteristics, which can lead to differences in analyte loadings of monitored storm events, will be evaluated for each year of monitoring. Specific storm parameters such as total rainfall, average intensity, peak intensity, and antecedent conditions will also be measured.

First year sampling results for the influent and effluent sites will be characterized by descriptive statistics and statistical comparisons between the influent and effluent will also be performed. Event mean concentrations (EMCs) will be measured for each water quality parameter at both locations. Annual statistics based upon assumed log-normal distributions also will be calculated for each water quality parameter. Subsequent to characterization of the stormwater runoff into and from a Swale/Strip, statistical comparisons will be performed to determine differences between the quality of the influent and the quality of the effluent.

Differences in mean concentrations of analytes between storm events and locations will be considered to be statistically significant at $P \leq 0.10$. Although the acceptable level of alpha error is typically set at $P \leq 0.05$, this decision level was increased due to the relatively high coefficients of variation (CV) encountered with stormwater data.

Widely varying storm event characteristics will be considered when evaluating BMP efficiencies based on stormwater runoff data.

Empirical observations, maintenance activities, and vector control activities will be compiled and compared to water quality and quantity data. These data will be used to determine the total unit of effort and will be weighed against the water quality benefits.

1.5 Encroachment Permit and Restrictions

Visitation to a Swale/Strip requires a Caltrans Encroachment Permit. Copies of the Swale/Strip permits are located in Tab 9 of the *FGN*. These permits list access and safety requirements along with any restrictions. The respective Caltrans District Encroachment Permit Office will be contacted for further information and direction. Phone numbers can be found under Tab 2 in the *FGN* portion of the Volume II OMM Plan.

2.0 OPERATION AND MAINTENANCE

2.1 Operation and Maintenance Needs

The operational and maintenance needs of a Swale/Strip are:

- Vegetation management to maintain adequate hydraulic functioning and to limit habitat for disease-carrying animals.
- Animal and vector control.
- Periodic sediment removal to optimize performance.
- Trash, debris, grass trimmings, tree prunings, and leaf collection and removal to prevent obstruction of a Swale/Strip and monitoring equipment.
- Removal of standing water which may contribute to the development of aquatic plant communities or mosquito breeding areas.
- Removal of graffiti.
- Preventive maintenance on sampling, flow measurement, and associated BMP equipment and structures.
- Erosion and structural maintenance to prevent the loss of soil and maintain the performance of the Swale/Strip.

2.2 Inspection Frequency

The facility will be inspected and inspection visits will be completely documented (refer to Forms C and D in Tab 4):

- Once a month at a minimum.
- After every large storm (after every storm monitored or those storms with more than 0.50 inch of precipitation.)
- On a weekly basis during extended periods of wet weather.

2.3 Aesthetic and Functional Maintenance

Aesthetic maintenance is important for public acceptance of stormwater facilities. Functional maintenance is important for performance and safety reasons.

Both forms of maintenance will be combined into an overall Stormwater Management System Maintenance Program. Maintenance activities will be carried out by the consultant. Maintenance items are included in the checklist/logs found in Tab 5 of the *FGN*. Maintenance activities will conform to practices specified in this manual.

2.3.1 Aesthetic Maintenance

The following activities will be included in the aesthetic maintenance program:

- **Graffiti Removal.** Graffiti will be removed in a timely manner to improve the appearance of a Swale/Strip and to discourage additional graffiti or other acts of vandalism.
- **Grass Trimming.** Trimming of grass will be done on the Swale/Strip, around fences, at the inlet and outlet structures, and sampling structures. More specifics on vegetation management are given in Section 4.0.
- **Weed Control.** Weeds will be removed through mechanical means. Herbicide will not be used because these chemicals may impact the water quality monitoring. More specifics on vegetation management are given in Section 4.0.

2.3.2 Functional Maintenance

Functional maintenance has two components:

1. Preventive maintenance
2. Corrective maintenance

Preventive Maintenance

Preventive maintenance that will be done on a regular basis is detailed in the checklists in Tab 5 of the *FGN*. Preventive maintenance activities to be instituted at a Swale/Strip are:

- **Grass Mowing.** Vegetation seed mix within the Swale/Strip is designed to be kept short to maintain adequate hydraulic functioning and to limit the development of faunal habitats. More specifics on vegetation management are given in Section 4.0.
- **Trash and Debris.** During each inspection and maintenance visit to the site, debris and trash removal will be conducted to reduce the potential for inlet and outlet structures and other components from becoming clogged and inoperable during storm events.
- **Sediment Removal.** Sediment accumulation, as part of the operation and maintenance program at a Swale/Strip, will be monitored once a month during the dry and wet seasons, and after every large storm (0.50 inch). This information will be recorded on Form C in Tab 4 of the FGN. Specifically, if sediment reaches a level at or near plant height, or could interfere with flow or operation, the sediment will be removed. The removal of this sediment will be recorded on Form E in Tab 5. Additionally, for every storm event, empirical observations (including short circuiting, channeling, ponding, or decline from design performance) of the performance of the Swale/Strip will be recorded on Form H1 in Tab 6 of the FGN. If accumulation of debris or sediment is determined to be the cause of decline in design performance, prompt action (i.e., within ten working days) will be taken to restore the Swale/Strip to design performance standards. Actions will include using additional fill and vegetation and/or removing accumulated sediment to correct channeling or ponding. Characterization and appropriate disposal of sediments is discussed in Section 2.6 and will comply with applicable local, county, state, or federal requirements. The swale/strip will be regraded, if the flow gradient has changed, and then replanted with sod according to the schedule outlined in Appendix V, the maintenance indicator document.

- **Removal of Standing Water.** Standing water must be removed if it contributes to the development of aquatic plant communities or mosquito breeding areas.
- **Mechanical and Electronic Components.** Regularly scheduled maintenance will be performed on fences, gates, locks, and sampling and monitoring equipment in accordance with the manufacturers' recommendations. Electronic and mechanical components will be operated during each maintenance inspection to assure continued performance.
- **Fertilization and Irrigation.** The vegetation seed mix has been designed so that fertilization and irrigation is not necessary. Fertilizers and irrigation will not be used to maintain the vegetation. If the vegetation does not survive without fertilization or irrigation then Caltrans will work with the Plaintiff to discuss options for maintaining the BMPs.
- **Elimination of Mosquito Breeding Habitats.** The most effective mosquito control program is one that eliminates potential breeding habitats. Mosquito control measures are discussed further in Appendix IV of Volume II.

Corrective Maintenance

Corrective maintenance is required on an emergency or non-routine basis to correct problems and to restore the intended operation and safe function of a Swale/Strip. Corrective maintenance activities include:

- **Removal of Debris and Sediment.** Sediment, debris, and trash, which impede the hydraulic functioning of a Swale/Strip and prevent vegetative growth, will be removed and properly disposed (refer to Section 2.6). Temporary arrangements will be made for handling the sediments until a permanent arrangement is made. Vegetation will be re-established after sediment removal.
- **Structural Repairs.** Once deemed necessary, repairs to structural components of a Swale/Strip and its inlet and outlet structures will be done within 30 days). Qualified individuals (i.e., the designers or contractors) will conduct repairs where structural damage has occurred.
- **Embankment and Slope Repairs**. Once deemed necessary, damage to the embankments and slopes of Swales will be repaired within 30 days).
- **Elimination of Mosquito Breeding Areas.** Consult Appendix IV for controlling mosquitoes.
- **Erosion Repair.** Where a reseeding program has been ineffective, or where other factors have created erosive conditions (i.e., pedestrian traffic, concentrated flow, etc.), corrective steps will be taken to prevent loss of soil and any subsequent danger to the performance of a Swale/Strip. There are a number of corrective actions than can be taken. These include erosion control blankets, riprap, sodding, or reduced flow through the area. Designers or contractors will be consulted to address erosion problems if the solution is not evident.
- **Fence Repair.** Repair of fences will be done within 30 days to maintain the security of the site.
- **Elimination of Animal Burrows.** Animal burrows will be filled and steps taken to remove the animals if burrowing problems continue to occur. If the problem persists, the appropriate vector control specialist (refer to the *FGN*) will be consulted regarding

removal steps. This consulting is necessary as the threat of rabies in some areas may necessitate the animals be destroyed rather than relocated. If the BMP performance is affected, abatement will begin immediately according to the directions in Appendix V. Otherwise, abatement will be performed annually in September. If burrows are found between March 1 and August 30, a biologist needs to confirm that no birds are nesting in the burrow before sealing the hole. At vulnerable sites, debris and woodpiles will be removed within 10 days.

- **General Facility Maintenance.** In addition to the above elements of corrective maintenance, general corrective maintenance will address the overall facility and its associated components. If corrective maintenance is being done to one component, other components will be inspected to see if maintenance is needed.

2.4 Maintenance Frequency

The maintenance indicator document, included as Appendix V, lists the schedule of maintenance activities to be implemented at a Swale/Strip.

2.5 Equipment, Resources, and Tools Needed

The following resources, equipment, and tools are needed by inspection personnel:

- A Locke level or other surveying equipment.
- Flashlight.
- Tape measure and other measuring device (e.g., survey rod) to determine sediment accumulation depths.
- Local erosion, sediment control, or stormwater management handbooks.
- Rain and foul weather gear.
- This Appendix and *FGN*.
- Copies of necessary inspection reports and forms.
- Encroachment permit.
- Business cards or other identification.
- Camera to document field conditions.
- Maintenance logs.
- Orange vest.
- Leather gloves.
- Hard hat.
- Safety glasses.
- Safety boots.
- Pen or pencil.

Except for the items contained onsite, the maintenance contractors will supply equipment, tools, and resources required for maintenance activities at a Swale/Strip. At a minimum, these contractors will supply the following:

- Heavy earth moving equipment (loaders, backhoes, graders, draglines, and vacuum equipment).
- Dump trucks, equipment transports, and other hauling equipment.
- Shovels, picks, rakes, wheel barrels, and other hand tools.
- Pumps.
- Mechanics tools.
- Concrete tools.
- Vegetation maintenance equipment (hand and tractor lawn mowers, gas trimmers, seed and fertilizer spreaders, pesticide and herbicide sprayers, leaf blowers, chain saws, pruning sheers, hedge trimmers, and wood chippers).
- Painting Equipment (brushes, rollers, and sprayers).
- Locke level or survey equipment, tape measures, and sediment probes.
- Safety equipment (gloves, boots, hard hats, reflective vests, safety glasses, traffic control lighting, and confined space entry equipment).

The consultants will provide for the maintenance contractors:

- This Appendix, *FGN* and approved BMP facility plans.
- Encroachment Permit.
- Logbook containing Maintenance Logs.

No items for maintenance and inspection activities will be left onsite.

2.6 Debris and Sediment Disposal

Waste generated at Swales/Strips is ultimately the responsibility of Caltrans. Consultants responsible for operating, maintaining, and monitoring the BMP will be responsible for removal and disposal of the waste material. Disposal of sediment, debris, and trash will comply with applicable local, county, state, and federal waste control programs. Table 2.1 shows a few possible disposal services for waste material.

Prior to disposal, removed sediments will be inspected to determine the extent and type of chemical contamination. Evidence of oil and grease, antifreeze, solvents, fuel, hydrogen sulfide, and any other noxious substance will be noted. Observations will be used to determine if more than the standard analyte list is required. The standard analyte list (Table 5.2) is based on highway contaminants that have potential to exceed California Code of Regulations (CCR), Title 22 hazardous waste criteria. Methods used to sample sediments are discussed in Subsection 5.7. While analytical results are pending, the removed sediments will be stored in 55-gallon drums onsite in an area protected from vehicular traffic. Separate drums will be used to contain sediments suspected to be differently contaminated.

Table 2.1
Waste Disposal Services in Southern California

Laidlaw / Rollins (OPC) 5765 Alba Street, Los Angeles, CA 92011 Ph: (213) 585-5063 Fax: (213) 589 5443 EPA: CAD050806850	Laidlaw Environmental Services 5295 S. Garvey Rd., Westmoreland, CA 92281 Ph: (619) 334-9400 Fax: (619) 344-9405 EPA: CAD000633164
TSM Recovery and Recycling 3422 W. Pico Blvd., Los Angeles, CA 90019 Ph: (213) 735-9443 EPA: CAD108040858	Pacific Resource Recovery 3150 E. Pico Blvd., Los Angeles, CA 90023 Ph: (800) 499-7145 Fax: (213) 780-9940 EPA: CAD008252405
Demenno Kerdoon Environmental Services 3650 E. 26th Street, Los Angeles, CA 90023 Ph: (213) 268-5056 Fax: (213) 268-9672 EPA: CAD080033681	U.S. Filter Recovery Services 5375 S. Boyle Ave., Vernon, CA 99058 Ph: (213) 277-1500 Fax: (213) 588-0094 EPA: CAD097030993

2.7 Hazardous Waste

Suspected hazardous wastes will be analyzed to determine disposal options. Hazardous wastes generated onsite will be handled and disposed of according to applicable local, state, and federal regulations. A solid or liquid waste is considered a hazardous waste if it exceeds the criteria listed in the CCR, Title 22, Article 11.

2.8 Checklists for Inspectors and Operation and Maintenance Personnel

Facility Inspection and Observational checklists or logs will be filled out during each visit to a Swale/Strip. These will be kept in a record book (field logbook) to ensure that the Swale/Strip is maintained at optimum levels throughout the monitoring period. The field logbook will also contain storm monitoring data sheets and instrument calibration logs (Tab 6 of the *FGN*). A separate logbook containing Facility Inspection Checklists and Maintenance Log Sheets will be kept. A separate logbook also will be kept for vector control and management logsheets (Appendix IV of Volume II).

Refer to Forms C, D, E, and F in the *FGN* for checklists related to the inspection and maintenance requirements of a Swale/Strip.

3.0 VECTOR CONTROL AND MANAGEMENT

Constructing retrofit pilot BMPs will modify the existing stormwater drainage systems. Because such retrofitting may create opportunities for disease carrying organisms to flourish, insects (such as mosquitoes and midges) or rodents may have to be controlled. Vector control and abatement will be performed in accordance with Appendix IV and by subcontracted Vector Control Districts.

4.0 VEGETATION MANAGEMENT

The three main reasons for having a vegetation management program for a Swale/Strip are:

1. Uncontrolled vegetation may affect the Swale/Strip performance.
2. Maintaining vegetation is necessary to prevent the facility from becoming a public "eyesore."
3. Maintaining vegetation is key to controlling mosquito populations and other vector and nuisance organisms.

4.1 Management for Optimal BMP Performance

Maintenance and control of vegetation is essential to the optimal operation and performance of a Swale/Strip. The Swales/Strips will be seeded with low-growing grasses, which minimizes the need for irrigation and fertilization.

The condition of the vegetation will be inspected on a monthly basis at a minimum. These inspections will insure that the Swale/Strip vegetation is kept relatively short (approximately 6 inches), that the vegetation protecting the slopes is kept healthy and continuous, and that undesirable plant species (e.g., woody vegetation) do not take root. Shorter vegetation will optimize the treatment capacity, the hydraulic residence time of runoff, and will aid in vector control. Maintaining healthy and continuous vegetation on the slopes will minimize erosion. Preventing undesirable plant species from taking root will prevent plants with large root systems from damaging the embankments. See Section 2.0 for details on vegetation maintenance.

4.2 Management for Optimal Vector Control

If vegetation such as cattails, bulrush, or willows develops within a Swale/Strip, problems may occur with vector control. Controlling vegetation and standing water is preferred to enacting vector abatement programs (see Appendix IV of Volume II for further details).

4.3 Maintenance Requirements

Mowing, trimming, and pruning are the preferred means for controlling vegetation at a Swale/Strip. Controlling standing water will also be essential in controlling vegetation.

When equipment is used to remove vegetation, care will be taken to prevent ruts, holes, and an uneven Swale/Strip floor. Such depressions can cause standing water that will create problems of vector control.

Additionally, the maintenance activities at a Swale/Strip will be carried out in a fashion that minimizes soil compaction.

Maintenance activities that will be conducted on landscaped vegetation include:

- Weeding.
- Pruning.
- Replacement of dead or dying plants
- Removal of woody vegetation, shrubs, dwarf plantain, pickleweed and woody wetland vegetation, and large debris.

The vegetation seed mix has been designed so that fertilization and irrigation is not necessary. Fertilizers and irrigation will not be used to maintain the vegetation. If vegetation does not survive without fertilization and irrigation, then Caltrans will work with the Plaintiff to discuss options for maintaining the BMP. Vegetation coverage problems should be addressed if coverage drops below 90% in the Swale invert or Strip,, or below 70% on the swale side slopes. The quantity of sod required will be assessed in May each year, with resodding of barren spots occurring in November. The sod will be irrigated until it becomes established.

Vegetation removed from a Swale/Strip will be promptly hauled off and disposed of properly. Cut vegetation will not be stockpiled onsite, especially in the Swale/Strip.

4.4 Checklists

During the routine vegetation inspections of the Swale/Strip, Inspection Checklists (Form C in Tab 3 of the *FGN*) will be completely filled out and signed by the inspector. These checklists incorporate necessary vegetation inspection requirements. BMP Site Maintenance Activity Checklists (Form E in Tab 5 of the *FGN*) will be filled out for maintenance activities performed.

5.0 SAMPLING AND MONITORING

This section details the monitoring equipment to be used at a Swale/Strip, sampling protocols, analytes to be tested, and quality assurance/quality control guidelines.

5.1 Equipment Installation

Runoff will be conveyed through a flume-to-swale transition structure where it will be spread evenly over the width of the Swale entrance. Influent flow will be measured and samples will be collected at the flume-to-swale transition structure. After the runoff flows through the Swale, it will pass through a second flume and then will discharge onto the ground, where the natural contours will direct the runoff to its original destination. Effluent flow will be measured and samples will be collected at the second flume.

Depending on siting constraints of a Strip, runoff will either flow through a transition structure equipped with a flume and will then spread evenly across a Strip; or runoff will spread evenly across the Strip without the use of a transition structure and flume. Influent flow will be measured and samples will be collected at this flume at sites where the flume was installed. In cases where influent to a Strip cannot be directly monitored, runoff from a nearby drain will be monitored (control location). Runoff from a control location is substantially identical to the runoff entering the Strip and has approximately the same size tributary area. After the runoff flows across the Strip, it will collect in a ditch, pass through a flume, and then will discharge into another BMP or onto the ground, where the natural contours will direct the runoff to its original destination. Effluent flow will be measured and samples will be collected at this flume.

Sampler intakes will be mounted in each conveyance upstream of the flume. Stainless steel concrete anchors will be used to secure the intakes to the invert of the conveyances.

Flow measurement points were selected at locations that minimized flow measurement errors resulting from turbulence and surcharges. Only experienced field crews will install monitoring equipment. Bubbler and intake tubing will be routed through conduit to equipment enclosures positioned on level ground near each flume. The equipment enclosures will house the data logger/controller assemblies, samplers, cellular modem equipment, flow metering electronics, and batteries.

The components of each automatic sampling system used will undergo calibration and verification during installation and also during maintenance and pre-storm visits.

5.1.1 Water Quality Samplers

The water quality samplers that will be used at a Swale/Strip will be automatic and composed of a peristaltic pump, a liquid detector, and a base to hold a sample bottle and ice. Each time a pre-determined volume of liquid passes the sampling point, the data logger/controller will signal the pump to deliver a self-calibrated sample volume. The suction hose used with the sampler will be 3/8-inch pure Teflon® tubing. Therefore, the sampler will be equipped with 3/8-inch silicon peristaltic tubing and a 3/8-inch stainless steel or Teflon® intake strainer of low-flow design. Strainers will be attached to the invert of each conveyance using stainless-steel fasteners. Samples will be collected into borosilicate glass bottles. After the storm event, the laboratory will pour portions of samples from each composite bottle into individual sample bottles, ensuring they are properly composited.

Materials used in the collection of stormwater samples will meet criteria to prevent contamination of the sample. These materials will allow for both inorganic and organic trace toxicant analyses from the same sampler and sample bottles. Only Teflon® and borosilicate glass are suitable for both trace metal and organic analyses from the same sample bottle. Bottles will be cleaned according to USEPA-approved protocols consistent with approved methodology for analysis of stormwater samples (USEPA, 1983 and subsequent revisions). Sample hoses will be replaced and decontaminated annually, prior to the wet season using the procedure described below. They will not be cleaned after each storm event. These bottles and hoses will be evaluated through a blanking process to verify that the sample bottles and sample hoses are decontaminated. Where possible, unused, disposable sampling equipment will be used to eliminate the need for decontamination.

Cleaning Procedures for Sample Bottles

Bottles will be:

1. Rinsed three times with warm tap water.
2. Scrubbed with a clean plastic brush.
3. Soaked in a 2% detergent (e.g., Contrad®) solution for at least 48-hours.
4. Rinsed three times with tap water.
5. Rinsed five times with Milli-Q or equivalent water, rotating the bottle to ensure contact with the entire inside surface.
6. Rinsed three times with hexane while rotating the bottle, and then air-dried.
7. Rinsed six times with Milli-Q water.
8. Soaked in 2N nitric acid for a minimum of 24-hours.
9. Rinsed six times with Milli-Q water.

Cleaning Procedures for Teflon®Hose and Other Sampling Equipment

Teflon® hose and other sampling equipment will be:

1. Teflon hose will be rinsed three times with a 2% Micro® solution or equivalent. Other sampling equipment will be washed with a 2% Micro® solution and a clean plastic brush.
2. Rinsed three times with warm tap water.
3. Rinsed three times with Milli-Q or equivalent water.
4. Rinsed three times with 2N nitric acid.
5. Soaked at least 24-hours in 2N nitric acid.
6. Rinsed three times with Milli-Q water.

5.1.2 Flow Monitoring

A flow-proportioned sample is a composite of individual sample aliquots that are collected for each set volume of water that passes by a sampling point. To obtain a valid composite sample, direct flow measurements will be made to control the sampling interval. At a Swale/Strip, both primary and secondary flow metering devices will be used. A primary flow measuring device is a hydraulic structure inserted into a channel that monitors changes in liquid level in or near the structure. By knowing the shape and dimensions of the hydraulic structure, flow through or over the structure is related to the liquid level by a mathematical relationship. A secondary flow metering device measures both liquid depth and/or velocity. Primary devices are preferable, unless hydraulic characteristics prohibit them.

A primary flow measuring discharge flume will be used at each sampling point. A bubbler will be used in conjunction with the flume. The bubbler measures the hydrostatic pressure of the liquid. The bubbler tube will be connected to the flume's stainless steel bubbler tube.

5.1.3 Rain Gauge

To measure rainfall, two approaches may be used. A rain gauge having a "tipping bucket" design that incorporates a small "bucket" which holds a known amount of rainfall may be used onsite. When the bucket is filled, it tips the water out, momentarily closes a switch, and then resets itself and starts the process again. The data logger/controller counts each switch closure to accumulate rainfall totals. The rain gauges used will tip after every 0.01 inch of rain.

The second approach is to use local area rain gauges to obtain rainfall data. The location and owner of the rain gauge nearest to the Swale/Strip site can be obtained from the Los Angeles County Department of Public Works. Monthly rainfall reports issued by the 15th

of each month can be obtained from the Los Angeles County Department of Public Works by contacting Mr. Joe Doughly at (626) 458-6123.

5.1.4 Power

The source of primary power for sampling systems will be either 12-volt deep-cycle marine batteries or 120V, AC power, where available. A separate battery will be used to power the autosamplers, modems, and flow meters.

5.1.5 Telecommunications

Cellular modem transceivers will be used to provide remote telecommunication access to the monitoring equipment. The ability to access a sampling station, monitor the status of the station in real-time, modify storm criteria, download new programs, and recover data allows for more cost effective, efficient monitoring.

A high performance base station antenna with filter will be installed; the filter will be installed from the lead-in of the antenna to prevent damage to the sampling station equipment due to nearby lightning strikes.

5.1.6 Equipment Enclosures

Fiberglass enclosures will be used to house the samplers and associated electronic equipment. These enclosures will be bolted to the concrete pads and will be locked to secure the monitoring equipment.

5.2 Maintenance and Calibration

A complete maintenance program will be performed at a Swale/Strip after each large storm event during the monitoring period, or in the absence of rain, on a monthly basis. Maintenance will include checking the performance of the equipment, checking power supplies, inspecting and clearing intake structures, cleaning contaminated equipment, and performing necessary equipment calibrations. Calibrations will be conducted in accordance to specifications in the individual component manuals.

Stormwater equipment maintenance visits will be thoroughly documented. Written documentation includes the action taken at a site as well as the date performed. Accurate and thorough records of station visits will be maintained to aid in the evaluation of a Swale/Strip's performance. The log illustrated in Form I in the *FGN* will be used to document maintenance and calibrations.

5.3 Preparation and Logistics

Success of the sampling effort requires careful preparation and planning to assure that high quality samples are obtained in association with each storm event.

5.3.1 Weather Tracking

Weather tracking will be the responsibility of the Task Order Manager and Storm Control personnel. During the wet season, the weather will be continually monitored with increased frequency as incoming storm systems are predicted. Sources of weather information to be used to track incoming storms include the following: National Weather Service, Weather Watch Service, Weather Network (WeatherNet), public broadcast information available on the Weather Channel and local news stations, and radar and satellite images downloaded from the Internet (e.g., www.weather.com).

5.3.2 Mobilization and Staffing

A staffing plan, which designates personnel and equipment for each facet of storm monitoring, will be developed as soon as a potential storm event is forecast. Crews will consist of two individuals. The staffing plan will include the following information:

- Personnel needed for each position.
  - Storm Control.
  - Shift Leader.
  - Crew Chiefs.
  - Crew Assistants.
- Shift and zone (pilot facilities manned by a single crew) designations.
- Equipment mobilization.
- Communication channels.

Equipment needed for stormwater sampling includes the sampling equipment, sampling containers, safety equipment, personal rain gear, Storm Kits, and vehicles equipped with some type of mobile communication, and highway safety equipment (see lists). The necessary equipment will be loaded into the appropriate vehicles early in the storm preparation sequence.

Storm Kit Equipment List

- Keypad/display
- 9-pin cable from keypad to data logger
- Full set of keys (on floatable bobber)
- Flashlights (2)
- Maps for required areas
- Large flat screwdriver
- Small flat screwdriver
- Umbrella
- High quality alkaline D-cell batteries
- Spare sample labels
- Pencils and indelible markers
- Desiccant (for flow meter/sampler)
- Diagonal clipper
- Electrical tape
- Cable ties (assorted sizes)
- Utility knife
- Ziplock baggies (assorted sizes)
- Labeling tape
- Powder-free nitrile gloves
- Rubber bands

Storm Mobilization List

- Storm kit
- Log books
- Paper towels
- DI (de-ionized) water squirt bottles
- Tape gun with clear tape
- Spare sample labels
- Ice scoop
- Sample control paperwork
- Extra fine indelible markers
- 1-gallon bottles in protective containers
- Grab sample bottles
- Coolers and ice
- Grab pole
- DI water (3-gallon jug)
- Two-way radio or cellular phone
- Personal rain gear
- Any necessary safety gear

5.3.3 Monitoring Station Preparation

Prior to a storm event, the Swale/Strip monitoring stations will be made ready to sample. This preparation includes entering the calculated “Volume-to-Sample” values, setting the autosampler and the data logger to sampling mode, pre-icing the sample bottle, and performing a general equipment inspection.

Determination of Volume-to-Sample

The latest weather forecast prior to each storm event will be examined to determine the proper "Volume-to-Sample" value to enter into the system. The amount of expected rainfall, how the station performed during the previous storm, and how much water is needed for analysis at the station for each storm event would be taken into consideration. The "Volume-to-Sample" is entered as a number with units in cubic feet (cf). To determine this number, the drainage area in acres and the runoff coefficient, which is a number that reflects the permeability of the land in the study area. The following equation will be used to determine the volume of water expected at a Swale/Strip for a given rainfall:

A x B x C x 3630 = volume in cf

Where:

A = inches of rain
B = drainage area in acres
C = runoff coefficient for land area
3630 = conversion factor: acre-inches to cubic feet

To determine how much water will pass the monitoring station between samples, divide this result by the number of samples needed to satisfy the water volume requirement for all analysis. Exhibit 9.2 in Tab 9 of the *FGN* indicates the “Volume-to-Sample” value needed to collect the correct sample amount of water for the amount of expected rainfall.

After the proper “Volume-to-Sample” value is determined, it will be entered into the system before the rainfall starts. The runoff value will generally be entered from the remote computer. The value can also be entered upon arrival at the site before the system has entered storm mode. It is important that this value is accurate as possible; if the value is too high, the system will not collect enough water to be analyzed, and if the value is too low, the system may sample too fast to be monitored effectively (i.e., the percent storm capture will drop).

Prepare Sampler

The autosampler will be reset and programmed to take 36 400-ml aliquots. Also other user-entered parameters (tubing length, head height, bottle size, composite sample, sample upon one pulse, and enabled liquid detector) will be set correctly.

During each site visit, the state of the System Status Flags (switches) and Program Signature will also be recorded. These provide important information on the current sampling mode and overall integrity of the site program.

Ice Sample Bottles

The sample bottles will be iced after the decision has been made to monitor the storm and prior to initial sample collection. If this is not possible, the bottles will be iced immediately upon the first visit.

General Inspection

A brief physical inspection of the equipment will be made to make certain that there are no obvious problems such as broken conduit or a kinked hose. If possible, the intake will be cleared of debris; at sites with confined entry access, this is only possible if the safety requirements listed in Appendix II are met.

Documentation

Upon each site visit, whether during storm mode or not, records of the visit will be accurately recorded on the field form (Form I in the *FGN*). Whenever possible, any data being recorded by the sampling system (for example, time or current stage) will be verified. Also, once during each storm event visit, the Empirical Observation Checklist will be completed (Form H1 in the *FGN*).

General Visitation Data

During each station visit, several display locations will be recorded. The log sheets will be used as a guide to the proper display locations to record. The following data will be recorded at both the influent and effluent stations:

- Data logger or staff gauge.
- Velocity (ft/s).
- Q (flow in cfs).
- Station ID.
- Flow meter battery voltage.
- Cellular equipment battery voltage.

Storm Visitation Data

Additional data will be recorded in the logbooks during storm monitoring. The log sheet will be used to determine the necessary information. The following data are uniform for each station:

- Volume (cf)
  This is the volume of water that passed the station during the previous execution interval (one minute).
- Storm Sum
  This indicates the accumulated runoff volume in cubic feet (cf) that has passed the station since the last sample.
- Percent Storm Capture
  This indicates the percent of the storm effectively sampled by the system, and it provides a quick evaluation of the quality of the monitoring.
- Volume-to-Sample
  This value indicates the runoff volume (in cf) that will pass the station before the system will take the next sample.
- Sample Count
  This number indicates the number of samples taken in the current bottle. It automatically re-zeroes every time a bottle is filled.
- Total Rain (inches)
  The total rainfall in inches since the start of the storm. This is accumulated each time that the rain bucket tips.
- Max Flow (day)
  This indicates the Julian day on which the maximum flow occurred.
- Max Flow (time)
  When this number is positive, it indicates that the system was sampling during peak stage. If this number is negative, sampling did not occur during the peak stage because the bottles were full.
- Max Stage (feet)
  This indicates the height of the maximum stage during the current storm.
- Max Flow (cfs)
  This indicates the maximum flow rate during the current storm.

- Storm Volume (cf)
  This indicates the total volume of water that has flowed past the station since the beginning of the storm.
- Storm Volume Sampled (cf)
  This indicates the total volume of water that flowed past the station while the system has been in storm mode.

After all data have been recorded, the system will be placed in low power mode.

5.4 Storm Monitoring

A priority objective of storm monitoring is to maximize the percent storm capture of the composite sample. This will be accomplished by changing out full sample bottles with empty ones. If all bottles do fill, the full sample bottles will be replaced and the system will be reset. To determine approximately when the bottles will fill and to ensure that the sampling process is not interrupted the Storm Sum and the "Volume-to-Sample" will be evaluated. By examining how quickly the Storm Sum value is approaching the "Volume-to-Sample" value, the approximate time until the next sample is taken can be determined, as well as the approximate time until the bottles fill. The monitoring crew will be aware of the current status of each station in each of its BMP pilot facilities to determine which station will fill all bottles first so they can be onsite to change out filled bottles. If the station has been set for the amount of rainfall that actually occurs, changing the sample bottles will not be necessary. "Volume-to-Sample" settings will take into account the volume of sample required to meet analytical needs. This study requires approximately 3 liters of sample to meet these needs.

The data logger pulses the autosampler to take a sample when the accumulated Storm Sum equals the "Volume-to-Sample." The storm sum is then reset to zero and the process is repeated. This continues until the storm ends or the bottles fill. Ideally, the "Volume-to-Sample" value will be accurate for the amount of anticipated rainfall, and the bottles will not need to be changed during the storm. If the rainfall is different than that predicted, the bottles may fill before the end of the storm. If this occurs, sampling will halt until the bottles are changed and the system is reset. While the system is reset, part of the storm is not being sampled, and the percent capture will show a decrease. It is therefore imperative that the system is reset and the sample bottles are changed immediately to maintain 100% storm capture.

5.4.1 Storm Procedure

Upon arrival at a station during a storm event the status of the sample bottles will be checked immediately. If it is not necessary to change the bottle at that time, the appropriate data on the log sheets will be recorded and the necessary physical measurements and observations will be taken. An approximate time that the bottles will

fill will be determined, and, depending on how much time is available, the next station will either be visited or the team will wait until the bottles fill. If the sample bottles are full, the system will be reset immediately, and the bottles replaced. When the bottles have been changed, the necessary station data will be filled in on the field log sheets.

5.4.2 Sample Bottle Replacement

The removal of the glass sample bottles from the sampler requires great care; the bottles are heavy when full and are very slippery when wet, as well as being expensive and fragile. Two people will be present to ensure the security of the bottles and of the sample itself. Extreme care will be taken not to kink the intake hose when handling the sampler.

The bottle numbers will be recorded in the logbook and each bottle will be labeled appropriately. When new bottles have been put in place, they will be re-iced and the sampler reset to continue sampling. Full bottles will be kept iced until composited.

5.4.3 Storm Monitoring Office

The main objective of the Storm Monitoring Office is to update field crews on the status of their stations. This will greatly reduce the amount of time a crew will spend driving during storms. The monitoring of stations from a remote computer consists of calling each station and recording certain data for evaluation. When it is determined that a sampling system is close to filling all bottles, a field crew will be called and alerted to the status of the station. Remote interrogation of the storm stations will be logged using Form K in Tab 6 of the *FGN*.

Generally, the Storm Monitoring Office is also the storm control position. This means that critical decisions regarding the status of storm monitoring are made with input from the Storm Monitoring Office.

Therefore, this position requires awareness of the latest weather forecasts to make informed decisions on the continued monitoring of the storm.

5.4.4 Post-Sampling Procedures

After a storm event has ended, the stations need to be shut down. The station will be left ready for the next storm event in case there is insufficient time for a maintenance visit between storms. The following items will be taken care of, and will be well documented in the FGN.

1. The storm monitoring program will be reset to prepare for another storm event.
2. The sample bottles will be replaced and the sampler reset.

3. The station will be physically inspected to determine if damage was sustained during the storm event. The flow sensor will be inspected to determine if it is blocked by debris, or the intake is clogged. (This is only possible if all confined space safety requirements are met).
4. The data will be retrieved. This will be done via modem from either the remote monitoring computer or directly in the field using a laptop computer.
5. Battery voltages will be checked; batteries that are low will be replaced.
6. An Empirical Observation Checklist (Form H1 in Tab 6 of the *FGN*) will be completed one time during the event.

Data Retrieval

Data will be retrieved (dumped) from the data logger after each storm event during the storm season, and approximately every month during dry weather.

Chain-of-Custody Forms

When all of the grab samples have been collected, the paperwork will be filled out to ensure a smooth transfer of samples to the analytical laboratory. Chain-of-Custody Forms will be filled out in detail describing the type of samples, the number of samples, and the times that the samples were collected. These forms will accompany the samples to the laboratory.

5.4.5 Evaluation

Upon termination of a storm monitoring event, evaluation of the influent and effluent stations' performance will be documented and reviewed before the samples collected are deemed valid. Evaluation of a monitoring station's performance is based on the answers to the following questions:

- Was the storm representative of the effectiveness range of the Swale/Strip?
- Was capture of peak flow or runoff achieved at both sampling points?
- Did the equipment perform as designed throughout the duration of the storm event?
- Did the samplers accurately collect equal and reliable storm sample aliquots?
- Did the Swale/Strip function as designed?

5.4.6 Grab Sampling

Total petroleum hydrocarbons (TPH) and bacteria (Fecal Coliform) samples are unsuitable for collection by automatic means. TPH is inappropriate because some material adheres to the surface of the tubing and the sample container. Automatic sampling for bacteria is inappropriate because the sampling equipment is not sterile after installation and exposure to the elements. Because these analytes are unsuitable for

collecting using an automated approach, they will be collected as a grab sample from both the influent and effluent twice each storm monitoring year.

It is imperative that collected grab samples be transferred to a designated meeting location immediately after the sampling has been completed. Chain-of-Custody Forms for the samples will be completed and transport of the samples to the analytical laboratory will be coordinated to ensure that samples are handled and analyzed within the proper holding times.

It is essential that the following sample handling protocols be followed when collecting grab samples to keep contamination to a minimum:

- Turn the vehicle engine OFF to minimize exposure of the sample to exhaust fumes.
- Keep sample containers in clean coolers until sampling is actually initiated.
- Store filled sample bottles in clean coolers at 4°C.
- Keep the bottle lid clean and free of debris while the bottle is open.

Grab samples will be collected during two storm events per monitoring season as near to the sampling point as possible. When unable to collect a sample near the intake, the sample will be collected as near the center of flow as possible or in an area of sufficient velocity to ensure good mixing. Both sampling points require a grab pole to collect the necessary grab samples. Sample bottles will be fitted snugly into the bottle holder and the bottles will be seated on the upstream side of the grab pole to reduce potential contamination. The bottle will be filled with the mouth of the bottle faced into the current, if possible. Also, the bottle will be labeled before it is filled as it is nearly impossible to write on wet bottles, and the station I.D. will be listed on the bottle to coincide with the station sampled.

Each type of grab sample may require special treatment to ensure the quality of the sample and the safety of the sampler. The preservative in the sample bottles is usually a concentrated acid, so care will be taken that the preservative does not come into contact with the skin. Powder-free nitrile gloves will be worn when handling sample containers. Both types of grab samples are discussed below.

TPH analyses will be performed for oil, diesel and gasoline fractions and reported separately for each. Samples to be analyzed for TPH gasoline fraction will be preserved with a concentrated acid (HCl). The sample bottles will be filled to below the neck and just above the shoulder. The bottle will not be overfilled because the preservative will be washed out. If the bottle is just slightly overfilled, a small amount of sample will be poured off after the preservative has mixed with the sample. A small amount of headspace is required in the containers to allow for expansion if the sample freezes while iced during shipping. These grab samples will be collected as soon as possible after runoff is detected.

Fecal Coliform are preserved with a small sodium thiosulfate tablet. To retain the tablet while sampling, it will be removed from the container when it is dipped into the flow. The bacteria bottle will be turned over causing the tablet to fall onto the cap of the bottle; the cap will be removed and set somewhere that will prevent it from becoming contaminated (out of the rain). The sample bottle will be filled to the shoulder, the cap tipped so the tablet falls into the sample and the cap secured to the bottle. These grab samples will be collected once the entire tributary area contributes stormwater runoff (i.e., any time after 10 minutes of continuous flow past the sampling point).

5.5 Sample Tracking and Handling

Water samples will be kept properly chilled and transferred to the analytical laboratory within holding times to achieve the highest quality data possible. To ensure proper tracking and handling of the samples, documentation will accompany the samples from the initial pickup to the final extractions and analysis. This documentation includes the Chain-of-Custody Forms (see Form M in Tab 7 of the *FGN* for an example form). These forms or equivalent will be used to track and handle samples.

Samples collected, including the composite containers, will be labeled with the following information:

- Project name.
- Date.
- Time.
- Swale/Strip name and number.
- Matrix
- Influent or effluent sampling location.
- Preservative.
- Collector's initials.
- Sample I.D. number.
- Analyte(s) to be analyzed.
- Grab or composite sample.

The analytical suite for each station depends upon the total volume of water collected for the storm event. When insufficient volumes have been collected, Storm Control will need to approve the analysis of the stormwater. A Priority Analysis Sheet will be used in conjunction with a Sample Bottle Evaluation to determine the analytical suite for each station, based on the volume of water collected at that station, the Volume-to-Sample, and the percent storm capture. When the storm has been evaluated and samples from each station accounted for, a duplicate station and a QA/QC station will be selected by Sample Control based on stormwater volumes available. Duplicate and QA/QC samples

will be prepared from the combined volume of the sample collected (i.e., from each of the sample bottles) at the selected duplicate and QA/QC station.

Duplicate and QA/QC sample bottles will be labeled, recorded on the Chain-of-Custody Form, and transported to the analytical laboratory.

Grab samples will be transported to the appropriate laboratory as soon as the grab sampling is completed, whereas the sample bottles for composite samples are transferred at the end of the storm event. Samples will be properly logged on the Chain-of-Custody Form and kept chilled in coolers. There will also be a field duplicate, a field blank, and extra water collected for QA/QC samples. These QA/QC grab samples will be collected at one of each consultant's BMPs during each storm event monitored. The sampling stations will be selected by Storm Control for collecting the duplicate grab samples. The crews monitoring the stations will be fully briefed on the procedures for collecting QA/QC samples, and will be familiar with the sample identification numbering scheme for these samples because they are to be submitted to the laboratory as blind samples. These samples will be labeled, recorded on the Chain-of-Custody Form, and transported to the analytical laboratory.

Each sample collected will receive a unique alphanumeric code (sample I.D. number) for tracking. This code will be standard for all samples and contain information as to the station, date, and sequential monitoring event number. The following is an example of this code:

SITE No.-IN-32898-001

Where:

Site No. = Site number of BMP site.
IN = Influent sampling point at the site; EF = effluent sampling point.
32898 = Julian day and year
001= First storm event monitored during this program at this location

If multiple bottles are used or needed, the last data field will indicate the bottle number and the total bottles in that sampling event (i.e., 001-1/3, 001-2/3, 001-3/3 for a three-bottle collection scheme).

A set of QA/QC samples will be provided with each type of sample analyzed for each storm event. The analytical laboratory may also require additional QA/QC samples if one type of analysis is to be run in more than one batch.

Blank samples, duplicate samples, MS/MSDs, and replicate/splits need not all be from the same station. However, per storm event (or batch run), these QA/QC samples will be analyzed for the standard analytes as field samples. Most field QA/QC samples are

submitted blind to the analytical laboratory, however, additional sample volumes provided to the laboratory for laboratory replicates or matrix spikes and matrix spike duplicates will be clearly identified. The main types of QA/QC samples that will be utilized for this study are as follows:

Duplicate Analyses - These analyses will be performed for both grab samples and composite samples and will require an additional set of sample containers to be sub-sampled. The results will allow evaluation of sampling error introduced by both field sampling and laboratory analyses by showing the reproducibility of the sample collection and analyses. Duplicate samples will be sent "blind" to the laboratories. One duplicate sample will be collected from one of each consultant's sampling locations during each storm event sampled and analyzed for the full list of analytes.

Duplicate samples will be identified by adding 500 to the sequential storm event number. For example, a duplicate sample for the site identified above will be:

SITE No.-IN-32898-501

Blanks - These are for field as well as laboratory samples. Blanks help verify that the equipment and the sample containers are not contaminated, and the sampling techniques used are non-contaminating. Sample bottles, Teflon® tubing, and filters will be rinsed with reagent grade analyte free deionized water separately. The collected rinsates will be analyzed for the full list of analytes for the composited samples. Blanks will also be run on the analytical equipment. Rinsate blanks will be run on two samplers used by each consultant at one of their BMPs prior to the installation of the equipment. Each time a batch of composite bottles is cleaned, five percent of those bottles will be blanked. Each time a batch of filters is purchased five percent of those filters will be blanked.

Equipment rinsate blanks will be identified by adding 600 to the sequential storm event number. For example, an equipment rinsate blank collected from the monitoring equipment from the site identified above will be:

SITE No.-IN-32898-601

Field blanks will be identified by adding 700 to the sequential storm event number. For example, a field blank collected at the site identified above will be:

SITE No.-IN-32898-701

Matrix Spike and Matrix Duplicate Spike (MS/MSD) - The laboratory will require additional sample volumes for analyses that require matrix spikes and matrix spike duplicates to evaluate precision and accuracy of the laboratory analytical method, and to evaluate any matrix interference. MS/MSDs are analyzed for their analyte(s) and then

spiked with a known amount of analyte(s). One MS/MSD sample will be run on metal and TPH samples from one of each consultant's sampling locations during each storm event sampled.

MS/MSD samples will be indicated on Chain-of-Custody Forms by clearly identifying that the sample is for MS/MSD purposes.

Laboratory Replicate/Split - This QA/QC analysis will require additional sample volumes. It is a duplicate analysis performed on the same sample and evaluates the repeatability (precision) of the analytical laboratories' results. One split sample will be run from one of each consultant's BMP sampling locations during each storm event sampled and analyzed for the full list of analytes.

Laboratory Replicate/Split samples will be indicated on Chain-of-Custody Forms by clearly identifying that the sample is for Laboratory Replicate/Split sample purposes.

5.6 Laboratory Selection, Sample Container Preparation, and Analytical Methods

5.6.1 Laboratory Selection

The selected laboratories have extensive experience with environmental samples and have the ability to provide rapid response to meet critical holding time requirements for analytes requiring expeditious analysis. Laboratories are certified by the California Department of Health Services for the requested analyses. Refer to Tab 2 in the *FGN* for specific laboratory listings.

5.6.2 Holding Times, Sample Bottles, and Preparation

The laboratories will be responsible for providing appropriate sample containers and, when necessary, with preservatives for each analysis. Table 5.1 provides a summary of sample volumes required for each analysis, along with the types of containers, holding times, and preservative. Because additional volumes are necessary for laboratory QA/QC, sample containers will provide at least twice the volume necessary to perform the requested analysis. The volume of the stormwater composite from each site is often the critical factor in determining the volume of sample that can be provided to the laboratory. The Project Task Order Manager and/or Storm Control personnel, in conjunction with the laboratories, will determine the allocation of sample volume for different analyses if sample volumes are not adequate to provide needed volume for each analysis. Table 5.1 lists the analyses along with a Priority Ranking. Also listed on Table 5.1 are the analytical methods and reporting limits.

Coliform bacteria samples have critical holding time requirements. The analysis will be started within 6 hours. This will require close coordination between the laboratory and the sampling team to assure that this analysis is completed within holding time. With composite samples, the start of holding times is considered to be the time that the last aliquot was sampled.

Attempts will be made to maintain the 6-hour holding time for bacteria to the extent practical. However, storm field conditions or safety concerns may prove this holding time infeasible. A maximum holding time of 24 hours will be followed, in accordance with "Standard Methods for the Examination of Water and Wastewater," 18th Edition.

5.6.3 Project Reporting Limits

Recommended analytical methods and reporting limits for this project are listed in Table 5.1. The reporting limits in this table are target reporting limits. In some cases, reporting limits may need to be adjusted due to limited sample volumes or potential matrix interference. In such cases, appropriate data qualifiers will be applied to the associated data.

5.6.4 Laboratory Data Package Deliverables

Laboratories will be required to provide a three-week turnaround on deliverables. The deliverable package will include a hard copy and electronic data files. The hard copy will include standard narratives identifying any analytical or QA/QC problems and corrective actions. The electronic data files will contain all information found in the hard copy reports submitted by the laboratories. Individual data sets will be submitted as either Microsoft Excel® Workbook files or as Microsoft Access® database files. Each consultant will be responsible for laboratory coordination and data management. Data management will be consistent with the "Caltrans Duty Management Plan – Data Reporting Protocol and Database," Doc. J. D. CTSW-TM-98-005.

Table 5.1
Stormwater Matrix
Analytical Parameters, Methodologies, Reporting Limits, Holding Times, Container Volumes and Types, and Preservation

Analyte	Priority Rank	Reporting Limit	Units	Analytical Technique	Method Number	Holding Time	Minimum Sample Volume	Preferred Volume and Container Type[1]	Preservation
Conventionals									
pH	1	0.1	Unit	Electrode	EPA 150.1	Immediately[2]	100 mL	1-100 mL glass/plastic	4°C
Specific Conductance	1	1.0	µmhos/cm	Electrometric	EPA 120.1	Immediately[2]	500 mL	1-500 mL glass/plastic	4°C
Hardness	5	2	mg/L	Titrimetric/ Colorimetric	EPA 130.2	6 months	100 mL	1-200 mL glass/plastic	HNO_3 to pH<2, 4°C
Total Suspended Solids	1	1	mg/L	Dried Filter Weight	EPA 160.2	7 days[3]	1 L	1-500 mL glass/plastic	4°C
Nutrients									
Nitrate-Nitrogen	2	0.01	mg/L	Colorimetric Ion Chromatography	EPA 353.3 EPA 300.0	28 days 48 hours	200 mL 200 mL	1-500 mL plastic 1-500 mL plastic	4°C and H_2SO_4 to pH<2 4°C
Total Kjeldahl Nitrogen	3	0.1	mg/L	Titrimetric/ Colorimetric	EPA 351.3	28 days	500 mL	1-1L plastic	4°C and H_2SO_4 to pH<2
Total Phosphorus	4	0.002	mg/L	Colorimetric	EPA 365.3	28 days	100 mL	1-250 mL plastic	4°C and H_2SO_4 to pH<2
Total/Dissolved Metals[4],[5]									
Copper	1	1	µg/L	ICP-MS	EPA 200.8	6 months	2 @ 500 mL	2-1L plastic	4°C and HNO_3 to pH<2 and filter
Lead	1	1	µg/L	ICP-MS	EPA 200.8	6 months	2 @ 500 mL	2-1L plastic	4°C and HNO_3 to pH<2 and filter
Zinc	1	1	µg/L	ICP-MS	EPA 200.8	6 months	2 @ 500 mL	2-1L plastic	4°C and HNO_3 to pH<2 and filter
Organics[6]									
Total Petroleum Hydrocarbons – Diesel/Oil	Grab	250/200	µg/L	GC	EPA 8015M	14 days	1 L	2-1L amber glass	4°C
Total Petroleum Hydrocarbons - Gasoline	Grab	50	µg/L	GC	EPA 8015M	14 days	2-40 mL	3-40 mL VOA vials	4°C, HCl to pH<2
Bacteria[6]									
Fecal Coliform	Grab	2	MPN/100 mL	Multiple-tube	SM 9221E	6 hours[7]	50 mL	1-100 mL plastic	4°C

1. Analytes with the same preservative can be combined into a single container if the same laboratory is performing the analyses.
2. pH and Specific Conductance will be measured by the laboratory immediately upon receipt of the samples.
3. 7 days based upon limit for measuring TSS/no regulatory limit.
4. Total and dissolved metals samples are collected in separate containers. Only the total metals container will receive nitric acid.
5. Dissolved metals will be filtered in the laboratory prior to acidification.
6. Total Petroleum Hydrocarbon and Fecal Coliform grab samples will be collected for two storms per year.
7. Attempts will be made to maintain the 6-hour holding time for bacteria samples to the extent possible. When not possible, a maximum holding time of 24 hours will be followed in accordance with "Standard Methods for the Examination of Water and Wastewater", 18th Edition.

5.7 Sediment Sampling

As part of the maintenance program, sediment will be removed from the BMP when flows are hydraulically impeded. It is anticipated that sediment will accumulate relatively slowly over time. However, should sediment deposit in a rapid manner, an intermediate step of stockpiling may become necessary before offsite disposal. Section 5.7.1 provides procedures to be used when assessing potential sediment contamination in the event intermediate onsite storage is necessary.

This section describes the sample collection procedures and analyses for assessing the quality of sediment removed from a Swale/Strip for disposal. Evidence of oil and grease, antifreeze, solvents, fuel, hydrogen sulfide, and any other noxious substance will be noted. Observations will be used to determine if more than the standard list of analytes is required. Observations will be documented on a checklist form (Form G in the *FGN*). The standard list (Table 5.2) is based on highway contaminants that have the potential to exceed hazardous waste criteria. After laboratory analysis, results will be compared to regulatory limits listed in California Code of Regulations (CCR) Title 22, Section 66261.24 and Department of Toxic Substances Control (DTSC) variances. Based on this evaluation, proper disposal methods will be chosen.

5.7.1 Sediment Collection

Procedures in EPA Publication *Test Methods for Evaluating Solid Waste, Physical/Chemical Methods (SW-846)* provide a method for determining the mean concentration of a given contaminant within a soil mass and the appropriate number of samples necessary to calculate this mean to the specified confidence interval. Initial sampling will generate a minimum number of samples/analyses as described below. Additional sample analyses may be required to meet the confidence levels given in *SW-846*; therefore archiving of samples will be necessary. Archived samples will be appropriately preserved and analyzed within the maximum holding time specified in Table 5.2. None of the samples will be allowed to be composited. The Quality Assurance/Quality Control (Appendix III) describes the QA/QC objectives for sediment samples. The minimum number of discrete samples initially required is given below. The log shown as Form G in Tab 5 of the FGN will be used to document sediment collection.

- Drums: A minimum of one sample will be collected from each drum.
- Stockpiles less than 10 cubic yards: A minimum of two samples will be collected, one from each half of the stockpile. Sampling points will be selected randomly within each half.
- Stockpiles from 10-20 cubic yards: A minimum of three samples will be collected, one from each third of the stockpile. Sampling points will be selected randomly within each third.

- Stockpiles from 20-100 cubic yards: A minimum of four samples will be collected, one from each quarter of the stockpile. Sampling points will be selected randomly within each quarter.
- Stockpiles from 100-500 cubic yards: A minimum of one sample for each 25 cubic yard portion will be collected. The stockpile will be sectioned into 25 cubic yard portions to obtain a minimum of one sample for each 25 cubic yard portion. Sampling points will be selected randomly within each 25 cubic yard portion of the stockpile.

Random samples will be selected from locations on a three-dimensional grid. If the presence of materials such as boulders, debris, etc. hinder this process, the sample will be collected as close as possible to the randomly selected point without altering the essence of the random selection process. The following steps will be used to collect sediment samples:

1. Don personal protective equipment.
2. Locate the sample point in the stockpile or drum.
3. Collect the sample using a soil probe or equivalent. Ensure that the sample is collected at the correct depth and location that was randomly selected.
4. Fill one 8-ounce glass jar with a portion of the sample and close the container with the cap, using care not to aerate (volatilize) the sample. This jar will be labeled and analyzed for TRPH and VOCs.
5. Homogenize the other portion of the sample in a disposable bowl using a disposable spatula or spoon. Fill a second 8-ounce glass jar with this portion of the sample and close the container with the cap. This sample will be labeled and analyzed for metals.
6. Wipe the outside of each sample container with a clean paper towel.
7. Record the sampler's initials, date, and time on the pre-labeled sample bottle.
8. Place the sample containers in individual zip-top plastic bags and seal the bags.
9. Immediately pack the samples into a chilled cooler.
10. Record the required information on the Chain-of-Custody Form.
11. Document the sampling event, recording information in the designated field logbook.
12. Repeat the above steps until the minimum number of samples has been collected.

5.7.2 Sediment Analyses

Unless observations indicate additional testing, sediment samples submitted to the laboratory will be analyzed for the list of analytes in Table 5.2 using Title 22 criteria (State of California, 1985). This table also lists the required reporting limits, analytical holding times, required preservation, and container sizes and types. Laboratory turn around times and data deliverables will be same as those for the stormwater samples.

Table 5.2
Sediment Matrix (Disposal)
Analytical Parameters, Methodologies, Reporting Limits, Holding Times, Container Volumes and Types, and Preservation

Parameter	Method	Units	Reporting Limit	Maximum Holding Time	Preservation	Container Size/Type(1)
Total Recoverable Petroleum Hydrocarbons (TRPH)	EPA 418.1	mg/kg	10	28 days	$4^{o}C$	8 oz glass jar
Volatile Organic Compounds	EPA 8260B	mg/kg	SW – 846 (5) requirements	14 days	$4^{o}C$	8 oz glass jar
California Code of Regulations (CCR), Title 22 Metals(2):	EPA 6020/7471	mg/kg	SW – 846 (5) requirements	180 days 28 days for mercury	$4^{o}C$	8 oz glass jar
California Code of Regulations (CCR), Title 22 Waste Extraction Test (WET) Metals(3):	STLC Extraction	mg/L	SW – 846 (5) requirements	180 days 28 days for mercury	4° C	NA
Toxicity Characteristic Leaching Procedure (TCLP) Metals(4):	TCLP 1311	mg/L	SW – 846 (5) requirements	180 days 28 days for mercury	4° C	NA

(1) Each sample will be collected in two 8 oz glass jars
(2) California Code of Regulation (CCR), Title 22 Metals (Sb, As, Ba, Be, Cd, Cr (total), Co, Cu, Hg, Pb, Mo, Ni, Se, Ag, Tl, V, and Zn). Initial waste characterization results may lead to a shorter list of metals for subsequent sediment disposal.
(3) Any sample for total metals that are below the Total Threshold Limit Concentration [TTLC] but exceed the ten times Soluble Threshold Limit Concentration (STLC) will be further analyzed using the WET procedure. WET extracts will be analyzed only for metals which exceed the ten times STLC criteria. Sediments associated with total metal results that exceed TTLC values are automatically considered hazardous and therefore do not need to undergo the WET procedure.
(4) If any of the WET-soluble concentrations are equal to or greater than the TCLP regulatory thresholds, analyze the waste by TCLP.
(5) "Test Methods for Evaluating Solid Waste, Physical /Chemical Methods". SW-846, Update III.(SW-846)

5.8 Empirical Observations

5.8.1 Purpose of Empirical Observations

Performance assessments of BMP facilities cannot be fully ascertained through analytical methods. "Empirical" observations are also critical in determining the overall performance of implemented water quality management practices and in ensuring that the practices are maintained at optimum levels. Other factors such as maintenance activities, environmental variability, and physical processes, which cannot be determined analytically, can greatly influence the performance of a particular BMP. Some of these factors such as rainfall quantity, rainfall intensity, and hydraulic residence times can, and, will be assessed through physical measurements. Other components such as trash build-up, sediment deposition, and runoff appearance are best assessed through careful documented observations.

5.8.2 Guidelines

Observations will be succinct but complete. For a Swale/Strip performance evaluation, the following observations will be taken at the influent location, within the Swale/Strip, and at the effluent location:

- Meteorological characteristics (present and preceding period).
- Hydrologic and hydraulic characteristics (flowing and/or standing water, channelization).
- Inlet conditions (problems affecting performance).
- Water quality appearance (visual, olfactory) to make a rough assessment of changes in water quality.
- Solids deposition (trash and debris, sediments, organics) and resuspension.
- Erosion.
- Vegetation condition.
- Outlet conditions (problems affecting performance).
- Mosquitoes and other vectors.
- Structural condition of facility.
- Monitoring equipment condition.
- Hydraulic residence time measurements (Swales only).

5.8.3 Checklist for Sampling and Monitoring Personnel

Form H1 in Tab 6 of the *FGN* provides a checklist (log form) that will be completed by sampling and monitoring personnel during every visit to the facility or, at a minimum, once per month.

5.9 Hydraulic Residence Time Evaluation

Removal of pollutants from stormwater is dependent on a variety of design factors including the hydraulic residence time. The hydraulic residence time is the amount of time it takes a slug of stormwater to flow through a Swale, and will be evaluated at each Swale during one storm event during each monitoring season. To determine the hydraulic residence time, a residence time distribution analysis will be carried out by injecting dye into stormwater runoff entering the Swale and monitoring the concentration (absorbance) of the dye in the runoff at the downstream end of the Swale. These results will be plotted to produce a flow-through curve, which will be used to evaluate performance indices (e.g., time to reach peak concentration and time to reach the centroid of the curve). The following procedure will be used to determine the hydraulic residence time of each Swale.

1. Mobilize a team for a storm event where the amount of rain predicted is greater than or equal to 0.10 inch. This event should **not** be an event during which stormwater monitoring (i.e., sampling) will be conducted.
2. Measure the Swale vegetation height and record it on Form H2 in Tab 6 of the *FGN*.
3. Remove any obstructions from the Swale and its inlet and outlet structures.
4. Initiate the flow monitoring equipment and ensure that it is properly calibrated. Program the bubbler to measure flow after each 1-minute interval (lowest possible setting). Set the flow monitoring equipment so that flow volume is totaled. After calibration and programming, begin data logging flow rates.
5. Pour 10 mL of yellow/green dye liquid (*Formulabs* or equivalent) into the inlet flume.
6. Once the dyed water reaches the beginning of the vegetation, start a stopwatch and begin timing the travel of the dyed water.
7. Record observation of the dyed water as it travels through the Swale.
8. Collect a sample at the downstream end of the Swale and use a colorimeter, or equivalent, to measure the absorbance in the sample.
9. Record the absorbance measurement, the time when the sample was collected, and the flow volume when the sample was collected on Form H2 in Tab 6 of the *FGN*.
10. Repeat Steps 8 and 9 every 2 minutes for a period of 1 hour or until the absorbance decreases to less than or equal to 10 percent of the peak absorbance measured, whichever occurs first.

6.0 REFERENCES

Eaton, A.D., L.S. Clesceri, and A.E. Greenberg, eds. 1992. Standard Methods for the Examination of Water and Wastewater, 18th Edition. American Public Health Association, American Water Works Association, and the Water Environment Federation.

Larry Walker and Associates. 1997. Guidance Manual: Stormwater Monitoring Protocols. Prepared for California Department of Transportation, Sacramento, CA. August 15, 1997.

Robert Bein, William Frost and Associates. 1997. Scoping Study, Retrofit Pilot Program, Caltrans District 7. Calif. Dept. Trans., Sacramento, CA.

USEPA, Test Methods for Evaluating Solid Waste, Physical/Chemical Methods,
SW-846, Final Update III, June 1997.

Watershed Management Institute. 1997. Operation, Maintenance, and Management of Stormwater Management Systems. Watershed Management Institute, Ingleside, MD.

State of California 1985. California Code of Federal Regulation, Title 22, Article 11. Criteria for the identification of hazardous and extremely hazardous wastes. Register 85, No. 3.1-12-85, Para. 66693-66796, pp. 1800.75-1800.86.

CALTRANS
BMP RETROFIT PILOT PROGRAM

DISTRICT 7, LOS ANGELES

BMP OPERATION, MAINTENANCE, AND MONITORING PLAN

VOLUME II

APPENDIX I-E
BIOFILTRATION SWALES AND STRIPS

September 1999

TABLE OF CONTENTS

Section **Page E-**

1.0 INTRODUCTION 1
1.1. Retrofit BMP Description 1
1.2. Evaluating BMP Performance 2
1.3. Deployment Criteria 3
1.4. Data Collection and Compilation 4
1.4.1. Data Requirements 4
1.4.2. Data Management 4
1.4.3. Data Analysis 5
1.5. Encroachment Permit and Restrictions 5

2.0 OPERATION AND MAINTENANCE 6
2.1. Operation and Maintenance Needs 6
2.2. Inspection Frequency 6
2.3. Aesthetic and Functional Maintenance 6
2.3.1. Aesthetic Maintenance 6
2.3.2. Functional Maintenance 7
2.4. Maintenance Frequency 9
2.5. Equipment, Resources, and Tools Needed 10
2.6. Debris and Sediment Disposal 10
2.7. Hazardous Waste 11
2.8. Checklists for Inspectors and Operation and Maintenance Personnel 11

3.0 VECTOR CONTROL AND MANAGEMENT 13

4.0 VEGETATION MANAGEMENT 15
4.1. Management for Optimal BMP Performance 15
4.2. Management for Optimal Vector Control 15
4.3. Maintenance Requirements 15
4.4. Checklists 16

5.0 SAMPLING AND MONITORING 17
5.1. Equipment Installation 17
5.1.1. Water Quality Samplers 18
5.1.2. Flow Monitoring 29
5.1.3. Rain Gauge 29
5.1.4. Power 20
5.1.5. Telecommunications 20
5.1.6. Equipment Enclosures 20

TABLE OF CONTENTS (continued)

Section **Page E-**

5.2. Maintenance and Calibration 20
5.3. Preparation and Logistics 21
5.3.1. Weather Tracking 21
5.3.2. Mobilization and Staffing 21
5.3.3. Monitoring Station Preparation 23
5.4. Storm Monitoring 26
5.4.1. Storm Procedure 26
5.4.2. Sample Bottle Replacement 27
5.4.3. Storm Monitoring Office 27
5.4.4. Post-Sampling Procedures 27
5.4.5. Evaluation 28
5.4.6. Grab Sampling 28
5.5. Sample Tracking and Handling 30
5.6. Laboratory Selection, Sample Container Preparation, and Analytical Methods 33
5.6.1. Laboratory Selection 33
5.6.2. Holding Times, Sample Bottles, and Preparation 33
5.6.3. Project Reporting Limits 34
5.6.4. Laboratory Data Package Deliverables 34
5.7. Sediment Sampling 36
5.7.1. Sediment Collection 36
5.7.2. Sediment Analyses 37
5.8. Empirical Observations 39
5.8.1. Purpose of Empirical Observations 39
5.8.2. Guidelines 39
5.8.3. Checklists for Sampling and Monitoring Personnel 39
5.9. Hydraulic Residence Time Evaluation 40

6.0 REFERENCES 41

TABLE OF CONTENTS (continued)

TABLES

2.1 Waste Disposal Services in Southern California
5.1 Stormwater Matrix Analytical Parameters, Methodologies, Reporting Limits, Holding Times, Container Volumes and Types, and Preservation
5.2 Sediment Matrix (Disposal) Analytical Parameters, Methodologies, Reporting Limits, Holding Times, Container Volumes and Types, and Preservation

FIGURES

1.1 Cross-section of a Biofiltration Swale

1.0 INTRODUCTION

The Caltrans Best Management Practice (BMP) Retrofit Pilot Program is a comprehensive water quality monitoring study to evaluate the removal of contaminants in stormwater runoff from Caltrans roads and facilities through a series of BMP pilot installations. The overall objectives of this portion of the program are to document BMP contaminant removal efficiency and technical feasibility.

This Appendix of the Operations, Maintenance, and Monitoring Plan (OMM) applies to Biofiltration Swales and Strips (Swales/Strips). Refer to the consultant's monitoring equipment manuals and stormwater monitoring Standard Operating Procedures (SOPs) for details related to equipment installation, equipment maintenance, and storm monitoring. Maintenance, safety, documentation, and storm monitoring tasks will be carried out according to the procedures detailed in this plan. Additional measures may be necessary due to unforeseen or temporary changes to the work environment at these sites.

1.1 Retrofit BMP Description

Biofiltration Swales/Strips remove pollutants from stormwater runoff as it flows through the vegetated system by filtration, infiltration, adsorption, ion exchange, and biological removal. Swales are conveyances (typically trapezoidal channels) where the flow passes through vegetation at some specified depth (see Figure 1.1). Filter Strips are broad vegetated surfaces, which receive and discharge flow in relatively thin sheets.

Both Swales and Strips are designed to treat stormwater runoff during "water quality storm events" (defined as up to the 1-year, 24-hour peak flows). Runoff hydraulic residence times through these swales and strips during a "water quality storm event" are typically nine minutes. No mechanism is provided to divert flows around the swales or strips in excess of "water quality storm events".

Figure 1.1 Cross-section of a Biofiltration Swale

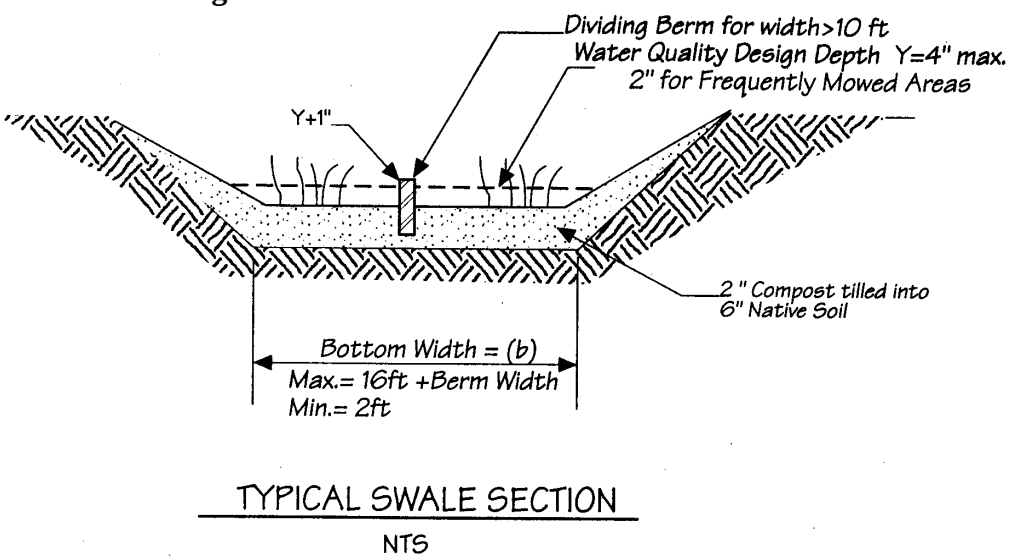

1.2 Evaluating BMP Performance

To effectively evaluate the performance of a Swale/Strip pilot facility, the following objectives will be met:

- Determine the quantity of runoff treated by the BMP.
- Determine the reduction (or change) in analyte concentrations between the influent and the effluent from the BMP.
- Determine and document the level of effort required to maintain the BMP at optimal effectiveness (i.e., treatment of stormwater runoff for storm events producing up to the 1-year, 24-hour peak flow).
- Determine and document the level of effort required to control vectors of human disease and nuisance insects, rodents, and vegetation at the BMP.
- Determine and document BMP performance evaluation criteria relative to the qualitative benefits of the BMP.

To effectively estimate the removal of contaminants from a Swale/Strip, the quantity and quality of runoff entering the Swale/Strip will be compared to the quantity and quality of water discharged from the Swale/Strip. These data will allow a direct estimate of the total reduction in mass loadings for a variety of contaminants.

The effectiveness of a Swale/Strip is also related to the implementation of maintenance procedures and the documentation of empirical observations. Items such as erosion and bank stability, vegetation height, trash and sediment build-up, and infiltration capability may directly affect the performance of a Swale/Strip as a stormwater treatment facility.

1.3 Deployment Criteria

Stormwater samples will be collected from the Swale/Strip for up to eight storm events over two wet seasons, weather permitting. Storms targeted for sampling will be separated by a minimum of 48 hours (72 hours preferably). The facility will be inspected per the guidelines given in Section 4.0 of the *Field Guidance Notebook* (*FGN*) which include a mandatory inspection after every storm with rainfall greater than 0.50 inches.

Based on the rainfall requirements needed to generate monitorable flows in and out of the pilots, Caltrans has developed a refined monitoring team deployment criteria. The refined deployment criteria defines when to chase storms based on season, storm forecasts, and the current count of successfully monitored storms.

The deployment season, in which monitoring teams remain "on-call" and fully staffed, will be restricted to the portion of the year when rainfall is most probable and better predictable. Summer showers are not seen as predictable events, and dry watersheds and BMPs will retain more water, which results in less effluent.

The deployment season will start on October 1. The season shall end after 3 weeks of dry weather where less than 0.2" of rainfall occurs in the San Diego or LA areas, but end no sooner than April 1 and not later than May 30th. This approach will provide a plan that adjusts to wet or dry springs.

The following criteria will decrease false starts, while allowing teams to continue to chase storms based on promising storm forecasts. The criteria will be used for all pilots, regardless of drainage area size or land use.

“Forecast-Unlikely” set to less than 0.25” rain and less than 50% probability, (Decision = "No Go")

“Forecast-Marginal” set to 0.25” or greater and 50 –75% probability, (Caltrans Decision)

“Forecast-Highly Probable” set to 0.25” or greater and greater than 75% probability. (Decision = "Go")

Forecast information will be gathered as indicated in the OM&M manuals (e.g., internet sources). As always, if conditions happen to allow paired samples to be successfully taken for any storm larger than 0.1", that sampling would be considered as a successful event, which would count towards fulfilling Scoping Study requirements.

When a specific pilot is successfully monitored for the total required storms per the applicable Scoping Study, the decision to further deploy to monitor that pilot will fall to Caltrans and no commitment to monitor beyond the terms of the Scoping Studies can be made at this time.

1.4 Data Collection and Compilation

1.4.1 Data Requirements

The following data will be collected to assess the performance and maintenance aspects of a Swale/Strip:

- Water quality and quantity data of runoff into and discharge from the Swale/Strip from flow-composite and first-flush (as soon as possible after the start of runoff) grab samples for at least eight storm events during two wet seasons, weather permitting.
- Rainfall data, recorded as a function of time, from rainfall events during the study period.
- Determination of the hydraulic residence time using dye tracing.
- Observations of water quality, weather, antecedent conditions, spills, etc.
- Documentation records of inspections and maintenance activities performed.
- Vector monitoring data.
- Records of vector control measures taken.
- Vegetation management records.

1.4.2 Data Management

Consultants will be responsible for data management. Overall management of the data will be consistent with established Caltrans procedures for stormwater monitoring projects and this manual.

The consultant's Sample Control Section will be responsible for tracking the analytical process to assure that laboratories are meeting the required turnaround times and are providing a complete deliverable package. Sample Control will also be responsible for accumulating copies of site visit logs, inspection logs, facility maintenance records, vector control sampling data, and logged rainfall and hydrographic data. Sample Control will receive the original hard and electronic copies from the laboratory, system managers, and field crews, and verify completeness and log dates of receipt. A copy of the data sets and log sheets will be filed in Sample Control's central filing system and another copy will be provided to the consultant's Database Manager. The originals will then be transferred to the Task Order Manager and filed with other project documentation to maintain complete project records.

Laboratories, system managers, and vector control crews will provide data in both hard copy and electronic formats. The forms of electronic submittals will be provided to the laboratories to ensure that the files can be imported into the project database with a minimum of editing. A relational database will be used for data. Laboratory data will be maintained and managed using Microsoft Excel® and Microsoft Access®. Files from the influent and effluent monitoring stations will be stored in the same database system and be linked to the laboratory database. The sampling system files will include rainfall, sampling, and flow data. Site characteristics will be stored in a separate file and linked to both the chemical and sampling system files to enable useful data queries.

Data will be submitted to Caltrans in accordance with "Caltrans Statewide Data Management Plan—Data Reported Protocol and Database," a technical memorandum dated 23 April 1998 from Larry Walker Associates to all Task Order Managers.

1.4.3 Data Analysis

Differences in storm characteristics, which can lead to differences in analyte loadings of monitored storm events, will be evaluated for each year of monitoring. Specific storm parameters such as total rainfall, average intensity, peak intensity, and antecedent conditions will also be measured.

First year sampling results for the influent and effluent sites will be characterized by descriptive statistics and statistical comparisons between the influent and effluent will also be performed. Event mean concentrations (EMCs) will be measured for each water quality parameter at both locations. Annual statistics based upon assumed log-normal distributions also will be calculated for each water quality parameter. Subsequent to characterization of the stormwater runoff into and from a Swale/Strip, statistical comparisons will be performed to determine differences between the quality of the influent and the quality of the effluent.

Differences in mean concentrations of analytes between storm events and locations will be considered to be statistically significant at $P \leq 0.10$. Although the acceptable level of alpha error is typically set at $P \leq 0.05$, this decision level was increased due to the relatively high coefficients of variation (CV) encountered with stormwater data.

Widely varying storm event characteristics will be considered when evaluating BMP efficiencies based on stormwater runoff data.

Empirical observations, maintenance activities, and vector control activities will be compiled and compared to water quality and quantity data. These data will be used to determine the total unit of effort and will be weighed against the water quality benefits.

1.5 Encroachment Permit and Restrictions

Visitation to a Swale/Strip requires a Caltrans Encroachment Permit. Copies of the Swale/Strip permits are located in Tab 9 of the *FGN*. These permits list access and safety requirements along with any restrictions. The respective Caltrans District Encroachment Permit Office will be contacted for further information and direction. Phone numbers can be found under Tab 2 in the *FGN* portion of the Volume II OMM Plan.

2.0 OPERATION AND MAINTENANCE

2.1 Operation and Maintenance Needs

The operational and maintenance needs of a Swale/Strip are:

- Vegetation management to maintain adequate hydraulic functioning and to limit habitat for disease-carrying animals.
- Animal and vector control.
- Periodic sediment removal to optimize performance.
- Trash, debris, grass trimmings, tree prunings, and leaf collection and removal to prevent obstruction of a Swale/Strip and monitoring equipment.
- Removal of standing water which may contribute to the development of aquatic plant communities or mosquito breeding areas.
- Removal of graffiti.
- Preventive maintenance on sampling, flow measurement, and associated BMP equipment and structures.
- Erosion and structural maintenance to prevent the loss of soil and maintain the performance of the Swale/Strip.

2.2 Inspection Frequency

The facility will be inspected and inspection visits will be completely documented (refer to Forms C and D in Tab 4):

- Once a month at a minimum.
- After every large storm (after every storm monitored or those storms with more than 0.50 inch of precipitation.)
- On a weekly basis during extended periods of wet weather.

2.3 Aesthetic and Functional Maintenance

Aesthetic maintenance is important for public acceptance of stormwater facilities. Functional maintenance is important for performance and safety reasons.

Both forms of maintenance will be combined into an overall Stormwater Management System Maintenance Program. Maintenance activities will be carried out by the consultant. Maintenance items are included in the checklist/logs found in Tab 5 of the *FGN*. Maintenance activities will conform to practices specified in this manual.

2.3.1 Aesthetic Maintenance

The following activities will be included in the aesthetic maintenance program:

- **Graffiti Removal.** Graffiti will be removed in a timely manner to improve the appearance of a Swale/Strip and to discourage additional graffiti or other acts of vandalism.
- **Grass Trimming.** Trimming of grass will be done on the Swale/Strip, around fences, at the inlet and outlet structures, and sampling structures. More specifics on vegetation management are given in Section 4.0.
- **Weed Control.** Weeds will be removed through mechanical means. Herbicide will not be used because these chemicals may impact the water quality monitoring. More specifics on vegetation management are given in Section 4.0.

2.3.2 Functional Maintenance

Functional maintenance has two components:

1. Preventive maintenance
2. Corrective maintenance

Preventive Maintenance

Preventive maintenance that will be done on a regular basis is detailed in the checklists in Tab 5 of the *FGN*. Preventive maintenance activities to be instituted at a Swale/Strip are:

- **Grass Mowing.** Vegetation seed mix within the Swale/Strip is designed to be kept short to maintain adequate hydraulic functioning and to limit the development of faunal habitats. More specifics on vegetation management are given in Section 4.0.
- **Trash and Debris.** During each inspection and maintenance visit to the site, debris and trash removal will be conducted to reduce the potential for inlet and outlet structures and other components from becoming clogged and inoperable during storm events.
- **Sediment Removal.** Sediment accumulation, as part of the operation and maintenance program at a Swale/Strip, will be monitored once a month during the dry and wet seasons, and after every large storm (0.50 inch). This information will be recorded on Form C in Tab 4 of the FGN. Specifically, if sediment reaches a level at or near plant height, or could interfere with flow or operation, the sediment will be removed. The removal of this sediment will be recorded on Form E in Tab 5. Additionally, for every storm event, empirical observations (including short circuiting, channeling, ponding, or decline from design performance) of the performance of the Swale/Strip will be recorded on Form H1 in Tab 6 of the FGN. If accumulation of debris or sediment is determined to be the cause of decline in design performance, prompt action (i.e., within ten working days) will be taken to restore the Swale/Strip to design performance standards. Actions will include using additional fill and vegetation and/or removing accumulated sediment to correct channeling or ponding. Characterization and appropriate disposal of sediments is discussed in Section 2.6 and will comply with applicable local, county, state, or federal requirements. The swale/strip will be regraded, if the flow gradient has changed, and then replanted with sod according to the schedule outlined in Appendix V, the maintenance indicator document.

- **Removal of Standing Water.** Standing water must be removed if it contributes to the development of aquatic plant communities or mosquito breeding areas.
- **Mechanical and Electronic Components.** Regularly scheduled maintenance will be performed on fences, gates, locks, and sampling and monitoring equipment in accordance with the manufacturers' recommendations. Electronic and mechanical components will be operated during each maintenance inspection to assure continued performance.
- **Fertilization and Irrigation.** The vegetation seed mix has been designed so that fertilization and irrigation is not necessary. Fertilizers and irrigation will not be used to maintain the vegetation. If the vegetation does not survive without fertilization or irrigation then Caltrans will work with the Plaintiff to discuss options for maintaining the BMPs.
- **Elimination of Mosquito Breeding Habitats.** The most effective mosquito control program is one that eliminates potential breeding habitats. Mosquito control measures are discussed further in Appendix IV of Volume II.

Corrective Maintenance

Corrective maintenance is required on an emergency or non-routine basis to correct problems and to restore the intended operation and safe function of a Swale/Strip. Corrective maintenance activities include:

- **Removal of Debris and Sediment.** Sediment, debris, and trash, which impede the hydraulic functioning of a Swale/Strip and prevent vegetative growth, will be removed and properly disposed (refer to Section 2.6). Temporary arrangements will be made for handling the sediments until a permanent arrangement is made. Vegetation will be re-established after sediment removal.
- **Structural Repairs.** Once deemed necessary, repairs to structural components of a Swale/Strip and its inlet and outlet structures will be done within 30 days). Qualified individuals (i.e., the designers or contractors) will conduct repairs where structural damage has occurred.
- **Embankment and Slope Repairs**. Once deemed necessary, damage to the embankments and slopes of Swales will be repaired within 30 days).
- **Elimination of Mosquito Breeding Areas.** Consult Appendix IV for controlling mosquitoes.
- **Erosion Repair.** Where a reseeding program has been ineffective, or where other factors have created erosive conditions (i.e., pedestrian traffic, concentrated flow, etc.), corrective steps will be taken to prevent loss of soil and any subsequent danger to the performance of a Swale/Strip. There are a number of corrective actions than can be taken. These include erosion control blankets, riprap, sodding, or reduced flow through the area. Designers or contractors will be consulted to address erosion problems if the solution is not evident.
- **Fence Repair.** Repair of fences will be done within 30 days to maintain the security of the site.
- **Elimination of Animal Burrows.** Animal burrows will be filled and steps taken to remove the animals if burrowing problems continue to occur. If the problem persists, the appropriate vector control specialist (refer to the *FGN*) will be consulted regarding

removal steps. This consulting is necessary as the threat of rabies in some areas may necessitate the animals be destroyed rather than relocated. If the BMP performance is affected, abatement will begin immediately according to the directions in Appendix V. Otherwise, abatement will be performed annually in September. If burrows are found between March 1 and August 30, a biologist needs to confirm that no birds are nesting in the burrow before sealing the hole. At vulnerable sites, debris and woodpiles will be removed within 10 days.

- **General Facility Maintenance.** In addition to the above elements of corrective maintenance, general corrective maintenance will address the overall facility and its associated components. If corrective maintenance is being done to one component, other components will be inspected to see if maintenance is needed.

2.4 Maintenance Frequency

The maintenance indicator document, included as Appendix V, lists the schedule of maintenance activities to be implemented at a Swale/Strip.

2.5 Equipment, Resources, and Tools Needed

The following resources, equipment, and tools are needed by inspection personnel:

- A Locke level or other surveying equipment.
- Flashlight.
- Tape measure and other measuring device (e.g., survey rod) to determine sediment accumulation depths.
- Local erosion, sediment control, or stormwater management handbooks.
- Rain and foul weather gear.
- This Appendix and *FGN*.
- Copies of necessary inspection reports and forms.
- Encroachment permit.
- Business cards or other identification.
- Camera to document field conditions.
- Maintenance logs.
- Orange vest.
- Leather gloves.
- Hard hat.
- Safety glasses.
- Safety boots.
- Pen or pencil.

Except for the items contained onsite, the maintenance contractors will supply equipment, tools, and resources required for maintenance activities at a Swale/Strip. At a minimum, these contractors will supply the following:

- Heavy earth moving equipment (loaders, backhoes, graders, draglines, and vacuum equipment).
- Dump trucks, equipment transports, and other hauling equipment.
- Shovels, picks, rakes, wheel barrels, and other hand tools.
- Pumps.
- Mechanics tools.
- Concrete tools.
- Vegetation maintenance equipment (hand and tractor lawn mowers, gas trimmers, seed and fertilizer spreaders, pesticide and herbicide sprayers, leaf blowers, chain saws, pruning sheers, hedge trimmers, and wood chippers).
- Painting Equipment (brushes, rollers, and sprayers).
- Locke level or survey equipment, tape measures, and sediment probes.
- Safety equipment (gloves, boots, hard hats, reflective vests, safety glasses, traffic control lighting, and confined space entry equipment).

The consultants will provide for the maintenance contractors:

- This Appendix, *FGN* and approved BMP facility plans.
- Encroachment Permit.
- Logbook containing Maintenance Logs.

No items for maintenance and inspection activities will be left onsite.

2.6 Debris and Sediment Disposal

Waste generated at Swales/Strips is ultimately the responsibility of Caltrans. Consultants responsible for operating, maintaining, and monitoring the BMP will be responsible for removal and disposal of the waste material. Disposal of sediment, debris, and trash will comply with applicable local, county, state, and federal waste control programs. Table 2.1 shows a few possible disposal services for waste material.

Prior to disposal, removed sediments will be inspected to determine the extent and type of chemical contamination. Evidence of oil and grease, antifreeze, solvents, fuel, hydrogen sulfide, and any other noxious substance will be noted. Observations will be used to determine if more than the standard analyte list is required. The standard analyte list (Table 5.2) is based on highway contaminants that have potential to exceed California Code of Regulations (CCR), Title 22 hazardous waste criteria. Methods used to sample sediments are discussed in Subsection 5.7. While analytical results are pending, the removed sediments will be stored in 55-gallon drums onsite in an area protected from vehicular traffic. Separate drums will be used to contain sediments suspected to be differently contaminated.

Table 2.1
Waste Disposal Services in Southern California

Laidlaw / Rollins (OPC) 5765 Alba Street, Los Angeles, CA 92011 Ph: (213) 585-5063 Fax: (213) 589 5443 EPA: CAD050806850	Laidlaw Environmental Services 5295 S. Garvey Rd., Westmoreland, CA 92281 Ph: (619) 334-9400 Fax: (619) 344-9405 EPA: CAD000633164
TSM Recovery and Recycling 3422 W. Pico Blvd., Los Angeles, CA 90019 Ph: (213) 735-9443 EPA: CAD108040858	Pacific Resource Recovery 3150 E. Pico Blvd., Los Angeles, CA 90023 Ph: (800) 499-7145 Fax: (213) 780-9940 EPA: CAD008252405
Demenno Kerdoon Environmental Services 3650 E. 26th Street, Los Angeles, CA 90023 Ph: (213) 268-5056 Fax: (213) 268-9672 EPA: CAD080033681	U.S. Filter Recovery Services 5375 S. Boyle Ave., Vernon, CA 99058 Ph: (213) 277-1500 Fax: (213) 588-0094 EPA: CAD097030993

2.7 Hazardous Waste

Suspected hazardous wastes will be analyzed to determine disposal options. Hazardous wastes generated onsite will be handled and disposed of according to applicable local, state, and federal regulations. A solid or liquid waste is considered a hazardous waste if it exceeds the criteria listed in the CCR, Title 22, Article 11.

2.8 Checklists for Inspectors and Operation and Maintenance Personnel

Facility Inspection and Observational checklists or logs will be filled out during each visit to a Swale/Strip. These will be kept in a record book (field logbook) to ensure that the Swale/Strip is maintained at optimum levels throughout the monitoring period. The field logbook will also contain storm monitoring data sheets and instrument calibration logs (Tab 6 of the *FGN*). A separate logbook containing Facility Inspection Checklists and Maintenance Log Sheets will be kept. A separate logbook also will be kept for vector control and management logsheets (Appendix IV of Volume II).

Refer to Forms C, D, E, and F in the *FGN* for checklists related to the inspection and maintenance requirements of a Swale/Strip.

3.0 VECTOR CONTROL AND MANAGEMENT

Constructing retrofit pilot BMPs will modify the existing stormwater drainage systems. Because such retrofitting may create opportunities for disease carrying organisms to flourish, insects (such as mosquitoes and midges) or rodents may have to be controlled. Vector control and abatement will be performed in accordance with Appendix IV and by subcontracted Vector Control Districts.

4.0 VEGETATION MANAGEMENT

The three main reasons for having a vegetation management program for a Swale/Strip are:

1. Uncontrolled vegetation may affect the Swale/Strip performance.
2. Maintaining vegetation is necessary to prevent the facility from becoming a public "eyesore."
3. Maintaining vegetation is key to controlling mosquito populations and other vector and nuisance organisms.

4.1 Management for Optimal BMP Performance

Maintenance and control of vegetation is essential to the optimal operation and performance of a Swale/Strip. The Swales/Strips will be seeded with low-growing grasses, which minimizes the need for irrigation and fertilization.

The condition of the vegetation will be inspected on a monthly basis at a minimum. These inspections will insure that the Swale/Strip vegetation is kept relatively short (approximately 6 inches), that the vegetation protecting the slopes is kept healthy and continuous, and that undesirable plant species (e.g., woody vegetation) do not take root. Shorter vegetation will optimize the treatment capacity, the hydraulic residence time of runoff, and will aid in vector control. Maintaining healthy and continuous vegetation on the slopes will minimize erosion. Preventing undesirable plant species from taking root will prevent plants with large root systems from damaging the embankments. See Section 2.0 for details on vegetation maintenance.

4.2 Management for Optimal Vector Control

If vegetation such as cattails, bulrush, or willows develops within a Swale/Strip, problems may occur with vector control. Controlling vegetation and standing water is preferred to enacting vector abatement programs (see Appendix IV of Volume II for further details).

4.3 Maintenance Requirements

Mowing, trimming, and pruning are the preferred means for controlling vegetation at a Swale/Strip. Controlling standing water will also be essential in controlling vegetation.

When equipment is used to remove vegetation, care will be taken to prevent ruts, holes, and an uneven Swale/Strip floor. Such depressions can cause standing water that will create problems of vector control.

Additionally, the maintenance activities at a Swale/Strip will be carried out in a fashion that minimizes soil compaction.

Maintenance activities that will be conducted on landscaped vegetation include:

- Weeding.
- Pruning.
- Replacement of dead or dying plants
- Removal of woody vegetation, shrubs, dwarf plantain, pickleweed and woody wetland vegetation, and large debris.

The vegetation seed mix has been designed so that fertilization and irrigation is not necessary. Fertilizers and irrigation will not be used to maintain the vegetation. If vegetation does not survive without fertilization and irrigation, then Caltrans will work with the Plaintiff to discuss options for maintaining the BMP. Vegetation coverage problems should be addressed if coverage drops below 90% in the Swale invert or Strip,, or below 70% on the swale side slopes. The quantity of sod required will be assessed in May each year, with resodding of barren spots occurring in November. The sod will be irrigated until it becomes established.

Vegetation removed from a Swale/Strip will be promptly hauled off and disposed of properly. Cut vegetation will not be stockpiled onsite, especially in the Swale/Strip.

4.4 Checklists

During the routine vegetation inspections of the Swale/Strip, Inspection Checklists (Form C in Tab 3 of the *FGN*) will be completely filled out and signed by the inspector. These checklists incorporate necessary vegetation inspection requirements. BMP Site Maintenance Activity Checklists (Form E in Tab 5 of the *FGN*) will be filled out for maintenance activities performed.

5.0 SAMPLING AND MONITORING

This section details the monitoring equipment to be used at a Swale/Strip, sampling protocols, analytes to be tested, and quality assurance/quality control guidelines.

5.1 Equipment Installation

Runoff will be conveyed through a flume-to-swale transition structure where it will be spread evenly over the width of the Swale entrance. Influent flow will be measured and samples will be collected at the flume-to-swale transition structure. After the runoff flows through the Swale, it will pass through a second flume and then will discharge onto the ground, where the natural contours will direct the runoff to its original destination. Effluent flow will be measured and samples will be collected at the second flume.

Depending on siting constraints of a Strip, runoff will either flow through a transition structure equipped with a flume and will then spread evenly across a Strip; or runoff will spread evenly across the Strip without the use of a transition structure and flume. Influent flow will be measured and samples will be collected at this flume at sites where the flume was installed. In cases where influent to a Strip cannot be directly monitored, runoff from a nearby drain will be monitored (control location). Runoff from a control location is substantially identical to the runoff entering the Strip and has approximately the same size tributary area. After the runoff flows across the Strip, it will collect in a ditch, pass through a flume, and then will discharge into another BMP or onto the ground, where the natural contours will direct the runoff to its original destination. Effluent flow will be measured and samples will be collected at this flume.

Sampler intakes will be mounted in each conveyance upstream of the flume. Stainless steel concrete anchors will be used to secure the intakes to the invert of the conveyances.

Flow measurement points were selected at locations that minimized flow measurement errors resulting from turbulence and surcharges. Only experienced field crews will install monitoring equipment. Bubbler and intake tubing will be routed through conduit to equipment enclosures positioned on level ground near each flume. The equipment enclosures will house the data logger/controller assemblies, samplers, cellular modem equipment, flow metering electronics, and batteries.

The components of each automatic sampling system used will undergo calibration and verification during installation and also during maintenance and pre-storm visits.

5.1.1 Water Quality Samplers

The water quality samplers that will be used at a Swale/Strip will be automatic and composed of a peristaltic pump, a liquid detector, and a base to hold a sample bottle and ice. Each time a pre-determined volume of liquid passes the sampling point, the data logger/controller will signal the pump to deliver a self-calibrated sample volume. The suction hose used with the sampler will be 3/8-inch pure Teflon® tubing. Therefore, the sampler will be equipped with 3/8-inch silicon peristaltic tubing and a 3/8-inch stainless steel or Teflon® intake strainer of low-flow design. Strainers will be attached to the invert of each conveyance using stainless-steel fasteners. Samples will be collected into borosilicate glass bottles. After the storm event, the laboratory will pour portions of samples from each composite bottle into individual sample bottles, ensuring they are properly composited.

Materials used in the collection of stormwater samples will meet criteria to prevent contamination of the sample. These materials will allow for both inorganic and organic trace toxicant analyses from the same sampler and sample bottles. Only Teflon® and borosilicate glass are suitable for both trace metal and organic analyses from the same sample bottle. Bottles will be cleaned according to USEPA-approved protocols consistent with approved methodology for analysis of stormwater samples (USEPA, 1983 and subsequent revisions). Sample hoses will be replaced and decontaminated annually, prior to the wet season using the procedure described below. They will not be cleaned after each storm event. These bottles and hoses will be evaluated through a blanking process to verify that the sample bottles and sample hoses are decontaminated. Where possible, unused, disposable sampling equipment will be used to eliminate the need for decontamination.

Cleaning Procedures for Sample Bottles

Bottles will be:

1. Rinsed three times with warm tap water.
2. Scrubbed with a clean plastic brush.
3. Soaked in a 2% detergent (e.g., Contrad®) solution for at least 48-hours.
4. Rinsed three times with tap water.
5. Rinsed five times with Milli-Q or equivalent water, rotating the bottle to ensure contact with the entire inside surface.
6. Rinsed three times with hexane while rotating the bottle, and then air-dried.
7. Rinsed six times with Milli-Q water.
8. Soaked in 2N nitric acid for a minimum of 24-hours.
9. Rinsed six times with Milli-Q water.

Cleaning Procedures for Teflon®Hose and Other Sampling Equipment

Teflon® hose and other sampling equipment will be:

1. Teflon hose will be rinsed three times with a 2% Micro® solution or equivalent. Other sampling equipment will be washed with a 2% Micro® solution and a clean plastic brush.
2. Rinsed three times with warm tap water.
3. Rinsed three times with Milli-Q or equivalent water.
4. Rinsed three times with 2N nitric acid.
5. Soaked at least 24-hours in 2N nitric acid.
6. Rinsed three times with Milli-Q water.

5.1.2 Flow Monitoring

A flow-proportioned sample is a composite of individual sample aliquots that are collected for each set volume of water that passes by a sampling point. To obtain a valid composite sample, direct flow measurements will be made to control the sampling interval. At a Swale/Strip, both primary and secondary flow metering devices will be used. A primary flow measuring device is a hydraulic structure inserted into a channel that monitors changes in liquid level in or near the structure. By knowing the shape and dimensions of the hydraulic structure, flow through or over the structure is related to the liquid level by a mathematical relationship. A secondary flow metering device measures both liquid depth and/or velocity. Primary devices are preferable, unless hydraulic characteristics prohibit them.

A primary flow measuring discharge flume will be used at each sampling point. A bubbler will be used in conjunction with the flume. The bubbler measures the hydrostatic pressure of the liquid. The bubbler tube will be connected to the flume's stainless steel bubbler tube.

5.1.3 Rain Gauge

To measure rainfall, two approaches may be used. A rain gauge having a "tipping bucket" design that incorporates a small "bucket" which holds a known amount of rainfall may be used onsite. When the bucket is filled, it tips the water out, momentarily closes a switch, and then resets itself and starts the process again. The data logger/controller counts each switch closure to accumulate rainfall totals. The rain gauges used will tip after every 0.01 inch of rain.

The second approach is to use local area rain gauges to obtain rainfall data. The location and owner of the rain gauge nearest to the Swale/Strip site can be obtained from the Los Angeles County Department of Public Works. Monthly rainfall reports issued by the 15th

of each month can be obtained from the Los Angeles County Department of Public Works by contacting Mr. Joe Doughly at (626) 458-6123.

5.1.4 Power

The source of primary power for sampling systems will be either 12-volt deep-cycle marine batteries or 120V, AC power, where available. A separate battery will be used to power the autosamplers, modems, and flow meters.

5.1.5 Telecommunications

Cellular modem transceivers will be used to provide remote telecommunication access to the monitoring equipment. The ability to access a sampling station, monitor the status of the station in real-time, modify storm criteria, download new programs, and recover data allows for more cost effective, efficient monitoring.

A high performance base station antenna with filter will be installed; the filter will be installed from the lead-in of the antenna to prevent damage to the sampling station equipment due to nearby lightning strikes.

5.1.6 Equipment Enclosures

Fiberglass enclosures will be used to house the samplers and associated electronic equipment. These enclosures will be bolted to the concrete pads and will be locked to secure the monitoring equipment.

5.2 Maintenance and Calibration

A complete maintenance program will be performed at a Swale/Strip after each large storm event during the monitoring period, or in the absence of rain, on a monthly basis. Maintenance will include checking the performance of the equipment, checking power supplies, inspecting and clearing intake structures, cleaning contaminated equipment, and performing necessary equipment calibrations. Calibrations will be conducted in accordance to specifications in the individual component manuals.

Stormwater equipment maintenance visits will be thoroughly documented. Written documentation includes the action taken at a site as well as the date performed. Accurate and thorough records of station visits will be maintained to aid in the evaluation of a Swale/Strip's performance. The log illustrated in Form I in the *FGN* will be used to document maintenance and calibrations.

5.3 Preparation and Logistics

Success of the sampling effort requires careful preparation and planning to assure that high quality samples are obtained in association with each storm event.

5.3.1 Weather Tracking

Weather tracking will be the responsibility of the Task Order Manager and Storm Control personnel. During the wet season, the weather will be continually monitored with increased frequency as incoming storm systems are predicted. Sources of weather information to be used to track incoming storms include the following: National Weather Service, Weather Watch Service, Weather Network (WeatherNet), public broadcast information available on the Weather Channel and local news stations, and radar and satellite images downloaded from the Internet (e.g., www.weather.com).

5.3.2 Mobilization and Staffing

A staffing plan, which designates personnel and equipment for each facet of storm monitoring, will be developed as soon as a potential storm event is forecast. Crews will consist of two individuals. The staffing plan will include the following information:

- Personnel needed for each position.
  - Storm Control.
  - Shift Leader.
  - Crew Chiefs.
  - Crew Assistants.
- Shift and zone (pilot facilities manned by a single crew) designations.
- Equipment mobilization.
- Communication channels.

Equipment needed for stormwater sampling includes the sampling equipment, sampling containers, safety equipment, personal rain gear, Storm Kits, and vehicles equipped with some type of mobile communication, and highway safety equipment (see lists). The necessary equipment will be loaded into the appropriate vehicles early in the storm preparation sequence.

Storm Kit Equipment List

- Keypad/display
- 9-pin cable from keypad to data logger
- Full set of keys (on floatable bobber)
- Flashlights (2)
- Maps for required areas
- Large flat screwdriver
- Small flat screwdriver
- Umbrella
- High quality alkaline D-cell batteries
- Spare sample labels
- Pencils and indelible markers
- Desiccant (for flow meter/sampler)
- Diagonal clipper
- Electrical tape
- Cable ties (assorted sizes)
- Utility knife
- Ziplock baggies (assorted sizes)
- Labeling tape
- Powder-free nitrile gloves
- Rubber bands

Storm Mobilization List

- Storm kit
- Log books
- Paper towels
- DI (de-ionized) water squirt bottles
- Tape gun with clear tape
- Spare sample labels
- Ice scoop
- Sample control paperwork
- Extra fine indelible markers
- 1-gallon bottles in protective containers
- Grab sample bottles
- Coolers and ice
- Grab pole
- DI water (3-gallon jug)
- Two-way radio or cellular phone
- Personal rain gear
- Any necessary safety gear

5.3.3 Monitoring Station Preparation

Prior to a storm event, the Swale/Strip monitoring stations will be made ready to sample. This preparation includes entering the calculated “Volume-to-Sample” values, setting the autosampler and the data logger to sampling mode, pre-icing the sample bottle, and performing a general equipment inspection.

Determination of Volume-to-Sample

The latest weather forecast prior to each storm event will be examined to determine the proper "Volume-to-Sample" value to enter into the system. The amount of expected rainfall, how the station performed during the previous storm, and how much water is needed for analysis at the station for each storm event would be taken into consideration. The "Volume-to-Sample" is entered as a number with units in cubic feet (cf). To determine this number, the drainage area in acres and the runoff coefficient, which is a number that reflects the permeability of the land in the study area. The following equation will be used to determine the volume of water expected at a Swale/Strip for a given rainfall:

A x B x C x 3630 = volume in cf

Where:

A = inches of rain
B = drainage area in acres
C = runoff coefficient for land area
3630 = conversion factor: acre-inches to cubic feet

To determine how much water will pass the monitoring station between samples, divide this result by the number of samples needed to satisfy the water volume requirement for all analysis. Exhibit 9.2 in Tab 9 of the *FGN* indicates the “Volume-to-Sample” value needed to collect the correct sample amount of water for the amount of expected rainfall.

After the proper “Volume-to-Sample” value is determined, it will be entered into the system before the rainfall starts. The runoff value will generally be entered from the remote computer. The value can also be entered upon arrival at the site before the system has entered storm mode. It is important that this value is accurate as possible; if the value is too high, the system will not collect enough water to be analyzed, and if the value is too low, the system may sample too fast to be monitored effectively (i.e., the percent storm capture will drop).

Prepare Sampler

The autosampler will be reset and programmed to take 36 400-ml aliquots. Also other user-entered parameters (tubing length, head height, bottle size, composite sample, sample upon one pulse, and enabled liquid detector) will be set correctly.

During each site visit, the state of the System Status Flags (switches) and Program Signature will also be recorded. These provide important information on the current sampling mode and overall integrity of the site program.

Ice Sample Bottles

The sample bottles will be iced after the decision has been made to monitor the storm and prior to initial sample collection. If this is not possible, the bottles will be iced immediately upon the first visit.

General Inspection

A brief physical inspection of the equipment will be made to make certain that there are no obvious problems such as broken conduit or a kinked hose. If possible, the intake will be cleared of debris; at sites with confined entry access, this is only possible if the safety requirements listed in Appendix II are met.

Documentation

Upon each site visit, whether during storm mode or not, records of the visit will be accurately recorded on the field form (Form I in the *FGN*). Whenever possible, any data being recorded by the sampling system (for example, time or current stage) will be verified. Also, once during each storm event visit, the Empirical Observation Checklist will be completed (Form H1 in the *FGN*).

General Visitation Data

During each station visit, several display locations will be recorded. The log sheets will be used as a guide to the proper display locations to record. The following data will be recorded at both the influent and effluent stations:

- Data logger or staff gauge.
- Velocity (ft/s).
- Q (flow in cfs).
- Station ID.
- Flow meter battery voltage.
- Cellular equipment battery voltage.

Storm Visitation Data

Additional data will be recorded in the logbooks during storm monitoring. The log sheet will be used to determine the necessary information. The following data are uniform for each station:

- Volume (cf)
  This is the volume of water that passed the station during the previous execution interval (one minute).
- Storm Sum
  This indicates the accumulated runoff volume in cubic feet (cf) that has passed the station since the last sample.
- Percent Storm Capture
  This indicates the percent of the storm effectively sampled by the system, and it provides a quick evaluation of the quality of the monitoring.
- Volume-to-Sample
  This value indicates the runoff volume (in cf) that will pass the station before the system will take the next sample.
- Sample Count
  This number indicates the number of samples taken in the current bottle. It automatically re-zeroes every time a bottle is filled.
- Total Rain (inches)
  The total rainfall in inches since the start of the storm. This is accumulated each time that the rain bucket tips.
- Max Flow (day)
  This indicates the Julian day on which the maximum flow occurred.
- Max Flow (time)
  When this number is positive, it indicates that the system was sampling during peak stage. If this number is negative, sampling did not occur during the peak stage because the bottles were full.
- Max Stage (feet)
  This indicates the height of the maximum stage during the current storm.
- Max Flow (cfs)
  This indicates the maximum flow rate during the current storm.

- Storm Volume (cf)
  This indicates the total volume of water that has flowed past the station since the beginning of the storm.
- Storm Volume Sampled (cf)
  This indicates the total volume of water that flowed past the station while the system has been in storm mode.

After all data have been recorded, the system will be placed in low power mode.

5.4 Storm Monitoring

A priority objective of storm monitoring is to maximize the percent storm capture of the composite sample. This will be accomplished by changing out full sample bottles with empty ones. If all bottles do fill, the full sample bottles will be replaced and the system will be reset. To determine approximately when the bottles will fill and to ensure that the sampling process is not interrupted the Storm Sum and the "Volume-to-Sample" will be evaluated. By examining how quickly the Storm Sum value is approaching the "Volume-to-Sample" value, the approximate time until the next sample is taken can be determined, as well as the approximate time until the bottles fill. The monitoring crew will be aware of the current status of each station in each of its BMP pilot facilities to determine which station will fill all bottles first so they can be onsite to change out filled bottles. If the station has been set for the amount of rainfall that actually occurs, changing the sample bottles will not be necessary. "Volume-to-Sample" settings will take into account the volume of sample required to meet analytical needs. This study requires approximately 3 liters of sample to meet these needs.

The data logger pulses the autosampler to take a sample when the accumulated Storm Sum equals the "Volume-to-Sample." The storm sum is then reset to zero and the process is repeated. This continues until the storm ends or the bottles fill. Ideally, the "Volume-to-Sample" value will be accurate for the amount of anticipated rainfall, and the bottles will not need to be changed during the storm. If the rainfall is different than that predicted, the bottles may fill before the end of the storm. If this occurs, sampling will halt until the bottles are changed and the system is reset. While the system is reset, part of the storm is not being sampled, and the percent capture will show a decrease. It is therefore imperative that the system is reset and the sample bottles are changed immediately to maintain 100% storm capture.

5.4.1 Storm Procedure

Upon arrival at a station during a storm event the status of the sample bottles will be checked immediately. If it is not necessary to change the bottle at that time, the appropriate data on the log sheets will be recorded and the necessary physical measurements and observations will be taken. An approximate time that the bottles will

fill will be determined, and, depending on how much time is available, the next station will either be visited or the team will wait until the bottles fill. If the sample bottles are full, the system will be reset immediately, and the bottles replaced. When the bottles have been changed, the necessary station data will be filled in on the field log sheets.

5.4.2 Sample Bottle Replacement

The removal of the glass sample bottles from the sampler requires great care; the bottles are heavy when full and are very slippery when wet, as well as being expensive and fragile. Two people will be present to ensure the security of the bottles and of the sample itself. Extreme care will be taken not to kink the intake hose when handling the sampler.

The bottle numbers will be recorded in the logbook and each bottle will be labeled appropriately. When new bottles have been put in place, they will be re-iced and the sampler reset to continue sampling. Full bottles will be kept iced until composited.

5.4.3 Storm Monitoring Office

The main objective of the Storm Monitoring Office is to update field crews on the status of their stations. This will greatly reduce the amount of time a crew will spend driving during storms. The monitoring of stations from a remote computer consists of calling each station and recording certain data for evaluation. When it is determined that a sampling system is close to filling all bottles, a field crew will be called and alerted to the status of the station. Remote interrogation of the storm stations will be logged using Form K in Tab 6 of the *FGN*.

Generally, the Storm Monitoring Office is also the storm control position. This means that critical decisions regarding the status of storm monitoring are made with input from the Storm Monitoring Office.

Therefore, this position requires awareness of the latest weather forecasts to make informed decisions on the continued monitoring of the storm.

5.4.4 Post-Sampling Procedures

After a storm event has ended, the stations need to be shut down. The station will be left ready for the next storm event in case there is insufficient time for a maintenance visit between storms. The following items will be taken care of, and will be well documented in the FGN.

1. The storm monitoring program will be reset to prepare for another storm event.
2. The sample bottles will be replaced and the sampler reset.

3. The station will be physically inspected to determine if damage was sustained during the storm event. The flow sensor will be inspected to determine if it is blocked by debris, or the intake is clogged. (This is only possible if all confined space safety requirements are met).
4. The data will be retrieved. This will be done via modem from either the remote monitoring computer or directly in the field using a laptop computer.
5. Battery voltages will be checked; batteries that are low will be replaced.
6. An Empirical Observation Checklist (Form H1 in Tab 6 of the *FGN*) will be completed one time during the event.

Data Retrieval

Data will be retrieved (dumped) from the data logger after each storm event during the storm season, and approximately every month during dry weather.

Chain-of-Custody Forms

When all of the grab samples have been collected, the paperwork will be filled out to ensure a smooth transfer of samples to the analytical laboratory. Chain-of-Custody Forms will be filled out in detail describing the type of samples, the number of samples, and the times that the samples were collected. These forms will accompany the samples to the laboratory.

5.4.5 Evaluation

Upon termination of a storm monitoring event, evaluation of the influent and effluent stations' performance will be documented and reviewed before the samples collected are deemed valid. Evaluation of a monitoring station's performance is based on the answers to the following questions:

- Was the storm representative of the effectiveness range of the Swale/Strip?
- Was capture of peak flow or runoff achieved at both sampling points?
- Did the equipment perform as designed throughout the duration of the storm event?
- Did the samplers accurately collect equal and reliable storm sample aliquots?
- Did the Swale/Strip function as designed?

5.4.6 Grab Sampling

Total recoverable petroleum hydrocarbons (TRPH) and bacteria (Fecal Coliform) samples are unsuitable for collection by automatic means. TRPH is inappropriate because some material adheres to the surface of the tubing and the sample container. Automatic sampling for bacteria is inappropriate because the sampling equipment is not sterile after installation and exposure to the elements. Because these analytes are

unsuitable for collecting using an automated approach, they will be collected as a grab sample from both the influent and effluent twice each storm monitoring year.

It is imperative that collected grab samples be transferred to a designated meeting location immediately after the sampling has been completed. Chain-of-Custody Forms for the samples will be completed and transport of the samples to the analytical laboratory will be coordinated to ensure that samples are handled and analyzed within the proper holding times.

It is essential that the following sample handling protocols be followed when collecting grab samples to keep contamination to a minimum:

- Turn the vehicle engine OFF to minimize exposure of the sample to exhaust fumes.
- Keep sample containers in clean coolers until sampling is actually initiated.
- Store filled sample bottles in clean coolers at 4°C.
- Keep the bottle lid clean and free of debris while the bottle is open.

Grab samples will be collected during two storm events per monitoring season as near to the sampling point as possible. When unable to collect a sample near the intake, the sample will be collected as near the center of flow as possible or in an area of sufficient velocity to ensure good mixing. Both sampling points require a grab pole to collect the necessary grab samples. Sample bottles will be fitted snugly into the bottle holder and the bottles will be seated on the upstream side of the grab pole to reduce potential contamination. The bottle will be filled with the mouth of the bottle faced into the current, if possible. Also, the bottle will be labeled before it is filled as it is nearly impossible to write on wet bottles, and the station I.D. will be listed on the bottle to coincide with the station sampled.

Each type of grab sample may require special treatment to ensure the quality of the sample and the safety of the sampler. The preservative in the sample bottles is usually a concentrated acid, so care will be taken that the preservative does not come into contact with the skin. Powder-free nitrile gloves will be worn when handling sample containers. Both types of grab samples are discussed below.

TRPH analyses will be performed for oil, diesel and gasoline fractions and reported separately for each. Samples to be analyzed for TRPH gasoline fraction will be preserved with a concentrated acid (HCl). The sample bottles will be filled to below the neck and just above the shoulder. The bottle will not be overfilled because the preservative will be washed out. If the bottle is just slightly overfilled, a small amount of sample will be poured off after the preservative has mixed with the sample. A small amount of headspace is required in the containers to allow for expansion if the sample freezes while iced during shipping. These grab samples will be collected as soon as possible after runoff is detected.

Fecal Coliform are preserved with a small sodium thiosulfate tablet. To retain the tablet while sampling, it will be removed from the container when it is dipped into the flow. The bacteria bottle will be turned over causing the tablet to fall onto the cap of the bottle; the cap will be removed and set somewhere that will prevent it from becoming contaminated (out of the rain). The sample bottle will be filled to the shoulder, the cap tipped so the tablet falls into the sample and the cap secured to the bottle. These grab samples will be collected once the entire tributary area contributes stormwater runoff (i.e., any time after 10 minutes of continuous flow past the sampling point).

5.5 Sample Tracking and Handling

Water samples will be kept properly chilled and transferred to the analytical laboratory within holding times to achieve the highest quality data possible. To ensure proper tracking and handling of the samples, documentation will accompany the samples from the initial pickup to the final extractions and analysis. This documentation includes the Chain-of-Custody Forms (see Form M in Tab 7 of the *FGN* for an example form). These forms or equivalent will be used to track and handle samples.

Samples collected, including the composite containers, will be labeled with the following information:

- Project name.
- Date.
- Time.
- Swale/Strip name and number.
- Matrix
- Influent or effluent sampling location.
- Preservative.
- Collector's initials.
- Sample I.D. number.
- Analyte(s) to be analyzed.
- Grab or composite sample.

The analytical suite for each station depends upon the total volume of water collected for the storm event. When insufficient volumes have been collected, Storm Control will need to approve the analysis of the stormwater. A Priority Analysis Sheet will be used in conjunction with a Sample Bottle Evaluation to determine the analytical suite for each station, based on the volume of water collected at that station, the Volume-to-Sample, and the percent storm capture. When the storm has been evaluated and samples from each station accounted for, a duplicate station and a QA/QC station will be selected by Sample Control based on stormwater volumes available. Duplicate and QA/QC samples

will be prepared from the combined volume of the sample collected (i.e., from each of the sample bottles) at the selected duplicate and QA/QC station.

Duplicate and QA/QC sample bottles will be labeled, recorded on the Chain-of-Custody Form, and transported to the analytical laboratory.

Grab samples will be transported to the appropriate laboratory as soon as the grab sampling is completed, whereas the sample bottles for composite samples are transferred at the end of the storm event. Samples will be properly logged on the Chain-of-Custody Form and kept chilled in coolers. There will also be a field duplicate, a field blank, and extra water collected for QA/QC samples. These QA/QC grab samples will be collected at one of each consultant's BMPs during each storm event monitored. The sampling stations will be selected by Storm Control for collecting the duplicate grab samples. The crews monitoring the stations will be fully briefed on the procedures for collecting QA/QC samples, and will be familiar with the sample identification numbering scheme for these samples because they are to be submitted to the laboratory as blind samples. These samples will be labeled, recorded on the Chain-of-Custody Form, and transported to the analytical laboratory.

Each sample collected will receive a unique alphanumeric code (sample I.D. number) for tracking. This code will be standard for all samples and contain information as to the station, date, and sequential monitoring event number. The following is an example of this code:

SITE No.-IN-32898-001

Where:

Site No. = Site number of BMP site.
IN = Influent sampling point at the site; EF = effluent sampling point.
32898 = Julian day and year
001= First storm event monitored during this program at this location

If multiple bottles are used or needed, the last data field will indicate the bottle number and the total bottles in that sampling event (i.e., 001-1/3, 001-2/3, 001-3/3 for a three-bottle collection scheme).

A set of QA/QC samples will be provided with each type of sample analyzed for each storm event. The analytical laboratory may also require additional QA/QC samples if one type of analysis is to be run in more than one batch.

Blank samples, duplicate samples, MS/MSDs, and replicate/splits need not all be from the same station. However, per storm event (or batch run), these QA/QC samples will be analyzed for the standard analytes as field samples. Most field QA/QC samples are

submitted blind to the analytical laboratory, however, additional sample volumes provided to the laboratory for laboratory replicates or matrix spikes and matrix spike duplicates will be clearly identified. The main types of QA/QC samples that will be utilized for this study are as follows:

Duplicate Analyses - These analyses will be performed for both grab samples and composite samples and will require an additional set of sample containers to be sub-sampled. The results will allow evaluation of sampling error introduced by both field sampling and laboratory analyses by showing the reproducibility of the sample collection and analyses. Duplicate samples will be sent "blind" to the laboratories. One duplicate sample will be collected from one of each consultant's sampling locations during each storm event sampled and analyzed for the full list of analytes.

Duplicate samples will be identified by adding 500 to the sequential storm event number. For example, a duplicate sample for the site identified above will be:

SITE No.-IN-32898-501

Blanks - These are for field as well as laboratory samples. Blanks help verify that the equipment and the sample containers are not contaminated, and the sampling techniques used are non-contaminating. Sample bottles, Teflon® tubing, and filters will be rinsed with reagent grade analyte free deionized water separately. The collected rinsates will be analyzed for the full list of analytes for the composited samples. Blanks will also be run on the analytical equipment. Rinsate blanks will be run on two samplers used by each consultant at one of their BMPs prior to the installation of the equipment. Each time a batch of composite bottles is cleaned, five percent of those bottles will be blanked. Each time a batch of filters is purchased five percent of those filters will be blanked.

Equipment rinsate blanks will be identified by adding 600 to the sequential storm event number. For example, an equipment rinsate blank collected from the monitoring equipment from the site identified above will be:

SITE No.-IN-32898-601

Field blanks will be identified by adding 700 to the sequential storm event number. For example, a field blank collected at the site identified above will be:

SITE No.-IN-32898-701

Matrix Spike and Matrix Duplicate Spike (MS/MSD) - The laboratory will require additional sample volumes for analyses that require matrix spikes and matrix spike duplicates to evaluate precision and accuracy of the laboratory analytical method, and to evaluate any matrix interference. MS/MSDs are analyzed for their analyte(s) and then

spiked with a known amount of analyte(s). One MS/MSD sample will be run on metal and TRPH samples from one of each consultant's sampling locations during each storm event sampled.

MS/MSD samples will be indicated on Chain-of-Custody Forms by clearly identifying that the sample is for MS/MSD purposes.

Laboratory Replicate/Split - This QA/QC analysis will require additional sample volumes. It is a duplicate analysis performed on the same sample and evaluates the repeatability (precision) of the analytical laboratories' results. One split sample will be run from one of each consultant's BMP sampling locations during each storm event sampled and analyzed for the full list of analytes.

Laboratory Replicate/Split samples will be indicated on Chain-of-Custody Forms by clearly identifying that the sample is for Laboratory Replicate/Split sample purposes.

5.6 Laboratory Selection, Sample Container Preparation, and Analytical Methods

5.6.1 Laboratory Selection

The selected laboratories have extensive experience with environmental samples and have the ability to provide rapid response to meet critical holding time requirements for analytes requiring expeditious analysis. Laboratories are certified by the California Department of Health Services for the requested analyses. Refer to Tab 2 in the *FGN* for specific laboratory listings.

5.6.2 Holding Times, Sample Bottles, and Preparation

The laboratories will be responsible for providing appropriate sample containers and, when necessary, with preservatives for each analysis. Table 5.1 provides a summary of sample volumes required for each analysis, along with the types of containers, holding times, and preservative. Because additional volumes are necessary for laboratory QA/QC, sample containers will provide at least twice the volume necessary to perform the requested analysis. The volume of the stormwater composite from each site is often the critical factor in determining the volume of sample that can be provided to the laboratory. The Project Task Order Manager and/or Storm Control personnel, in conjunction with the laboratories, will determine the allocation of sample volume for different analyses if sample volumes are not adequate to provide needed volume for each analysis. Table 5.1 lists the analyses along with a Priority Ranking. Also listed on Table 5.1 are the analytical methods and reporting limits.

Coliform bacteria samples have critical holding time requirements. The analysis will be started within 6 hours. This will require close coordination between the laboratory and the sampling team to assure that this analysis is completed within holding time. With composite samples, the start of holding times is considered to be the time that the last aliquot was sampled.

Attempts will be made to maintain the 6-hour holding time for bacteria to the extent practical. However, storm field conditions or safety concerns may prove this holding time infeasible. A maximum holding time of 24 hours will be followed, in accordance with "Standard Methods for the Examination of Water and Wastewater," 18th Edition.

5.6.3 Project Reporting Limits

Recommended analytical methods and reporting limits for this project are listed in Table 5.1. The reporting limits in this table are target reporting limits. In some cases, reporting limits may need to be adjusted due to limited sample volumes or potential matrix interference. In such cases, appropriate data qualifiers will be applied to the associated data.

5.6.4 Laboratory Data Package Deliverables

Laboratories will be required to provide a three-week turnaround on deliverables. The deliverable package will include a hard copy and electronic data files. The hard copy will include standard narratives identifying any analytical or QA/QC problems and corrective actions. The electronic data files will contain all information found in the hard copy reports submitted by the laboratories. Individual data sets will be submitted as either Microsoft Excel® Workbook files or as Microsoft Access® database files. Each consultant will be responsible for laboratory coordination and data management. Data management will be consistent with the "Caltrans Duty Management Plan – Data Reporting Protocol and Database," Doc. J. D. CTSW-TM-98-005.

Table 5.1
Stormwater Matrix
Analytical Parameters, Methodologies, Reporting Limits, Holding Times, Container Volumes and Types, and Preservation

Analyte	Priority Rank	Reporting Limit	Units	Analytical Technique	Method Number	Holding Time	Minimum Sample Volume	Preferred Volume and Container Type[1]	Preservation
Conventionals									
pH	1	0.1	Unit	Electrode	EPA 150.1	Immediately[2]	100 mL	1-100 mL glass/plastic	4°C
Specific Conductance	1	1.0	µmhos/cm	Electrometric	EPA 120.1	Immediately[2]	500 mL	1-500 mL glass/plastic	4°C
Hardness	5	2	mg/L	Titrimetric/ Colorimetric	EPA 130.2	6 months	100 mL	1-200 mL glass/plastic	HNO_3 to pH<2, 4°C
Total Suspended Solids	1	1	mg/L	Dried Filter Weight	EPA 160.2	7 days[3]	1 L	1-500 mL glass/plastic	4°C
Nutrients									
Nitrate-Nitrogen	2	0.01	mg/L	Colorimetric Ion Chromatography	EPA 353.3 EPA 300.0	28 days 48 hours	200 mL 200 mL	1-500 mL plastic 1-500 mL plastic	4°C and H_2SO_4 to pH<2 4°C
Total Kjeldahl Nitrogen	3	0.1	mg/L	Titrimetric/ Colorimetric	EPA 351.3	28 days	500 mL	1-1L plastic	4°C and H_2SO_4 to pH<2
Total Phosphorus	4	0.002	mg/L	Colorimetric	EPA 365.3	28 days	100 mL	1-250 mL plastic	4°C and H_2SO_4 to pH<2
Total/Dissolved Metals[4],[5]									
Copper	1	1	µg/L	ICP-MS	EPA 200.8	6 months	2 @ 500 mL	2-1L plastic	4°C and HNO_3 to pH<2 and filter
Lead	1	1	µg/L	ICP-MS	EPA 200.8	6 months	2 @ 500 mL	2-1L plastic	4°C and HNO_3 to pH<2 and filter
Zinc	1	1	µg/L	ICP-MS	EPA 200.8	6 months	2 @ 500 mL	2-1L plastic	4°C and HNO_3 to pH<2 and filter
Organics[6]									
Total Petroleum Hydrocarbons – Diesel/Oil	Grab	250/200	µg/L	GC	EPA 8015M	14 days	1 L	2-1L amber glass	4°C
Total Petroleum Hydrocarbons - Gasoline	Grab	50	µg/L	GC	EPA 8015M	14 days	2-40 mL	3-40 mL VOA vials	4°C, HCl to pH<2
Bacteria[6]									
Fecal Coliform	Grab	2	MPN/100 mL	Multiple-tube	SM 9221E	6 hours[7]	50 mL	1-100 mL plastic	4°C

1. Analytes with the same preservative can be combined into a single container if the same laboratory is performing the analyses.
2. pH and Specific Conductance will be measured by the laboratory immediately upon receipt of the samples.
3. 7 days based upon limit for measuring TSS/no regulatory limit.
4. Total and dissolved metals samples are collected in separate containers. Only the total metals container will receive nitric acid.
5. Dissolved metals will be filtered in the laboratory prior to acidification.
6. Total Petroleum Hydrocarbon and Fecal Coliform grab samples will be collected for two storms per year.
7. Attempts will be made to maintain the 6-hour holding time for bacteria samples to the extent possible. When not possible, a maximum holding time of 24 hours will be followed in accordance with "Standard Methods for the Examination of Water and Wastewater", 18th Edition.

5.7 Sediment Sampling

As part of the maintenance program, sediment will be removed from the BMP when flows are hydraulically impeded. It is anticipated that sediment will accumulate relatively slowly over time. However, should sediment deposit in a rapid manner, an intermediate step of stockpiling may become necessary before offsite disposal. Section 5.7.1 provides procedures to be used when assessing potential sediment contamination in the event intermediate onsite storage is necessary.

This section describes the sample collection procedures and analyses for assessing the quality of sediment removed from a Swale/Strip for disposal. Evidence of oil and grease, antifreeze, solvents, fuel, hydrogen sulfide, and any other noxious substance will be noted. Observations will be used to determine if more than the standard list of analytes is required. Observations will be documented on a checklist form (Form G in the *FGN*). The standard list (Table 5.2) is based on highway contaminants that have the potential to exceed hazardous waste criteria. After laboratory analysis, results will be compared to regulatory limits listed in California Code of Regulations (CCR) Title 22, Section 66261.24 and Department of Toxic Substances Control (DTSC) variances. Based on this evaluation, proper disposal methods will be chosen.

5.7.1 Sediment Collection

Procedures in EPA Publication *Test Methods for Evaluating Solid Waste, Physical/Chemical Methods (SW-846)* provide a method for determining the mean concentration of a given contaminant within a soil mass and the appropriate number of samples necessary to calculate this mean to the specified confidence interval. Initial sampling will generate a minimum number of samples/analyses as described below. Additional sample analyses may be required to meet the confidence levels given in *SW-846*; therefore archiving of samples will be necessary. Archived samples will be appropriately preserved and analyzed within the maximum holding time specified in Table 5.2. None of the samples will be allowed to be composited. The Quality Assurance/Quality Control (Appendix III) describes the QA/QC objectives for sediment samples. The minimum number of discrete samples initially required is given below. The log shown as Form G in Tab 5 of the FGN will be used to document sediment collection.

- Drums: A minimum of one sample will be collected from each drum.
- Stockpiles less than 10 cubic yards: A minimum of two samples will be collected, one from each half of the stockpile. Sampling points will be selected randomly within each half.
- Stockpiles from 10-20 cubic yards: A minimum of three samples will be collected, one from each third of the stockpile. Sampling points will be selected randomly within each third.

- Stockpiles from 20-100 cubic yards: A minimum of four samples will be collected, one from each quarter of the stockpile. Sampling points will be selected randomly within each quarter.
- Stockpiles from 100-500 cubic yards: A minimum of one sample for each 25 cubic yard portion will be collected. The stockpile will be sectioned into 25 cubic yard portions to obtain a minimum of one sample for each 25 cubic yard portion. Sampling points will be selected randomly within each 25 cubic yard portion of the stockpile.

Random samples will be selected from locations on a three-dimensional grid. If the presence of materials such as boulders, debris, etc. hinder this process, the sample will be collected as close as possible to the randomly selected point without altering the essence of the random selection process. The following steps will be used to collect sediment samples:

1. Don personal protective equipment.
2. Locate the sample point in the stockpile or drum.
3. Collect the sample using a soil probe or equivalent. Ensure that the sample is collected at the correct depth and location that was randomly selected.
4. Fill one 8-ounce glass jar with a portion of the sample and close the container with the cap, using care not to aerate (volatilize) the sample. This jar will be labeled and analyzed for TPH and VOCs.
5. Homogenize the other portion of the sample in a disposable bowl using a disposable spatula or spoon. Fill a second 8-ounce glass jar with this portion of the sample and close the container with the cap. This sample will be labeled and analyzed for metals.
6. Wipe the outside of each sample container with a clean paper towel.
7. Record the sampler's initials, date, and time on the pre-labeled sample bottle.
8. Place the sample containers in individual zip-top plastic bags and seal the bags.
9. Immediately pack the samples into a chilled cooler.
10. Record the required information on the Chain-of-Custody Form.
11. Document the sampling event, recording information in the designated field logbook.
12. Repeat the above steps until the minimum number of samples has been collected.

5.7.2 Sediment Analyses

Unless observations indicate additional testing, sediment samples submitted to the laboratory will be analyzed for the list of analytes in Table 5.2 using Title 22 criteria (State of California, 1985). This table also lists the required reporting limits, analytical holding times, required preservation, and container sizes and types. Laboratory turn around times and data deliverables will be same as those for the stormwater samples.

Table 5.2
Sediment Matrix (Disposal)
Analytical Parameters, Methodologies, Reporting Limits, Holding Times, Container Volumes and Types, and Preservation

Parameter	Method	Units	Reporting Limit	Maximum Holding Time	Preservation	Container Size/Type(1)
Total Petroleum Hydrocarbons (TPH)	EPA 418.1	mg/kg	10	28 days	$4^{o}C$	8 oz glass jar
Volatile Organic Compounds	EPA 8260B	mg/kg	SW – 846 (5) requirements	14 days	$4^{o}C$	8 oz glass jar
California Code of Regulations (CCR), Title 22 Metals(2):	EPA 6020/7471	mg/kg	SW – 846 (5) requirements	180 days 28 days for mercury	$4^{o}C$	8 oz glass jar
California Code of Regulations (CCR), Title 22 Waste Extraction Test (WET) Metals(3):	STLC Extraction	mg/L	SW – 846 (5) requirements	180 days 28 days for mercury	4° C	NA
Toxicity Characteristic Leaching Procedure (TCLP) Metals(4):	TCLP 1311	mg/L	SW – 846 (5) requirements	180 days 28 days for mercury	4° C	NA

(1) Each sample will be collected in two 8 oz glass jars
(2) California Code of Regulation (CCR), Title 22 Metals (Sb, As, Ba, Be, Cd, Cr (total), Co, Cu, Hg, Pb, Mo, Ni, Se, Ag, Tl, V, and Zn). Initial waste characterization results may lead to a shorter list of metals for subsequent sediment disposal.
(3) Any sample for total metals that are below the Total Threshold Limit Concentration [TTLC] but exceed the ten times Soluble Threshold Limit Concentration (STLC) will be further analyzed using the WET procedure. WET extracts will be analyzed only for metals which exceed the ten times STLC criteria. Sediments associated with total metal results that exceed TTLC values are automatically considered hazardous and therefore do not need to undergo the WET procedure.
(4) If any of the WET-soluble concentrations are equal to or greater than the TCLP regulatory thresholds, analyze the waste by TCLP.
(5) "Test Methods for Evaluating Solid Waste, Physical /Chemical Methods". SW-846, Update III.(SW-846)

5.8 Empirical Observations

5.8.1 Purpose of Empirical Observations

Performance assessments of BMP facilities cannot be fully ascertained through analytical methods. "Empirical" observations are also critical in determining the overall performance of implemented water quality management practices and in ensuring that the practices are maintained at optimum levels. Other factors such as maintenance activities, environmental variability, and physical processes, which cannot be determined analytically, can greatly influence the performance of a particular BMP. Some of these factors such as rainfall quantity, rainfall intensity, and hydraulic residence times can, and, will be assessed through physical measurements. Other components such as trash build-up, sediment deposition, and runoff appearance are best assessed through careful documented observations.

5.8.2 Guidelines

Observations will be succinct but complete. For a Swale/Strip performance evaluation, the following observations will be taken at the influent location, within the Swale/Strip, and at the effluent location:

- Meteorological characteristics (present and preceding period).
- Hydrologic and hydraulic characteristics (flowing and/or standing water, channelization).
- Inlet conditions (problems affecting performance).
- Water quality appearance (visual, olfactory) to make a rough assessment of changes in water quality.
- Solids deposition (trash and debris, sediments, organics) and resuspension.
- Erosion.
- Vegetation condition.
- Outlet conditions (problems affecting performance).
- Mosquitoes and other vectors.
- Structural condition of facility.
- Monitoring equipment condition.
- Hydraulic residence time measurements (Swales only).

5.8.3 Checklist for Sampling and Monitoring Personnel

Form H1 in Tab 6 of the *FGN* provides a checklist (log form) that will be completed by sampling and monitoring personnel during every visit to the facility or, at a minimum, once per month.

5.9 Hydraulic Residence Time Evaluation

Removal of pollutants from stormwater is dependent on a variety of design factors including the hydraulic residence time. The hydraulic residence time is the amount of time it takes a slug of stormwater to flow through a Swale, and will be evaluated at each Swale during one storm event during each monitoring season. To determine the hydraulic residence time, a residence time distribution analysis will be carried out by injecting dye into stormwater runoff entering the Swale and monitoring the concentration (absorbance) of the dye in the runoff at the downstream end of the Swale. These results will be plotted to produce a flow-through curve, which will be used to evaluate performance indices (e.g., time to reach peak concentration and time to reach the centroid of the curve). The following procedure will be used to determine the hydraulic residence time of each Swale.

1. Mobilize a team for a storm event where the amount of rain predicted is greater than or equal to 0.10 inch. This event should **not** be an event during which stormwater monitoring (i.e., sampling) will be conducted.
2. Measure the Swale vegetation height and record it on Form H2 in Tab 6 of the *FGN*.
3. Remove any obstructions from the Swale and its inlet and outlet structures.
4. Initiate the flow monitoring equipment and ensure that it is properly calibrated. Program the bubbler to measure flow after each 1-minute interval (lowest possible setting). Set the flow monitoring equipment so that flow volume is totaled. After calibration and programming, begin data logging flow rates.
5. Pour 10 mL of yellow/green dye liquid (*Formulabs* or equivalent) into the inlet flume.
6. Once the dyed water reaches the beginning of the vegetation, start a stopwatch and begin timing the travel of the dyed water.
7. Record observation of the dyed water as it travels through the Swale.
8. Collect a sample at the downstream end of the Swale and use a colorimeter, or equivalent, to measure the absorbance in the sample.
9. Record the absorbance measurement, the time when the sample was collected, and the flow volume when the sample was collected on Form H2 in Tab 6 of the *FGN*.
10. Repeat Steps 8 and 9 every 2 minutes for a period of 1 hour or until the absorbance decreases to less than or equal to 10 percent of the peak absorbance measured, whichever occurs first.

6.0 REFERENCES

Eaton, A.D., L.S. Clesceri, and A.E. Greenberg, eds. 1992. Standard Methods for the Examination of Water and Wastewater, 18th Edition. American Public Health Association, American Water Works Association, and the Water Environment Federation.

Larry Walker and Associates. 1997. Guidance Manual: Stormwater Monitoring Protocols. Prepared for California Department of Transportation, Sacramento, CA. August 15, 1997.

Robert Bein, William Frost and Associates. 1997. Scoping Study, Retrofit Pilot Program, Caltrans District 7. Calif. Dept. Trans., Sacramento, CA.

USEPA, Test Methods for Evaluating Solid Waste, Physical/Chemical Methods,
SW-846, Final Update III, June 1997.

Watershed Management Institute. 1997. Operation, Maintenance, and Management of Stormwater Management Systems. Watershed Management Institute, Ingleside, MD.

State of California 1985. California Code of Federal Regulation, Title 22, Article 11. Criteria for the identification of hazardous and extremely hazardous wastes. Register 85, No. 3.1-12-85, Para. 66693-66796, pp. 1800.75-1800.86.

CALTRANS
BMP RETROFIT PILOT PROGRAM

DISTRICT 7, LOS ANGELES

BMP OPERATION, MAINTENANCE, AND MONITORING PLAN

VOLUME II

APPENDIX I-F

OIL / WATER SEPARATOR

September 1999

TABLE OF CONTENTS

Section **Page F-**

1.0 INTRODUCTION....1
1.1 Retrofit BMP Description....1
1.2 Deployment Criteria....5
1.3 Deployment Criteria....5
1.4 Data Collection and Compilation....6
1.4.1 Data Requirements....6
1.4.2 Data Management....7
1.4.3 Data Analysis....7
1.5 Encroachment Permit and Restrictions....8

2.0 OPERATION AND MAINTENANCE....9
2.1 Operation and Maintenance Needs....9
2.2 Inspection Frequency....9
2.3 Aesthetic and Functional Maintenance....9
2.3.1 Functional Maintenance....10
2.4 Maintenance Frequency....11
2.5 Equipment, Resources, and Tools Needed....11
2.6 Debris and Sediment Disposal....12
2.7 Hazardous Waste....13
2.8 Checklist for Inspectors and Operation and Maintenance Personnel....13

3.0 VECTOR CONTROL AND MANAGEMENT....14

4.0 VEGETATION MANAGEMENT....15

5.0 SAMPLING AND MONITORING....17
5.1 Equipment....17
5.1.1 Water Quality Samplers....17
5.1.2 Flow Monitoring....17
5.1.3 Rain Gauge....17
5.1.4 Power....17
5.1.5 Telecommunications....17
5.1.6 Equipment Enclosures....18
5.2 Maintenance and Calibration....18
5.3 Preparation and Logistics....18
5.3.1 Weather Tracking....18
5.3.2 Mobilization and Staffing....18
5.3.3 Monitoring Station Preparation....20
5.4 Storm Monitoring....20
5.4.1 Storm Monitoring Office....20
5.4.2 Post Sampling Procedures....21

TABLE OF CONTENTS (Continued)

5.4.3 Evaluation 22
5.4.4 Grab Sampling 22
5.5 Sample Tracking and Handling 23
5.6 Laboratory Selection, Sample Container Preparation, and Analytical Methods....26
5.6.1 Laboratory Selection 26
5.6.2 Holding Times, Sample Bottles, and Preparation....26
5.6.3 Project Reporting limits 26
5.6.4 Laboratory Data Package Deliverables 29
5.7 Sediment Sampling and Testing for Disposal Purposes 29
5.7.1 Sediment Collection....29
5.7.2 Sediment Analyses....30
5.8 Empirical Observations 32
5.8.1 Purpose of Empirical Observations 32
5.8.2 Guidelines 32
5.8.3 Checklist for Sampling and Monitoring Personnel....32

6.0 REFERENCES 33

7.0 MANUFACTURER'S LITERATURE 35

TABLES

2.1 Waste Disposal Services in Southern California
5.1 Stormwater Matrix Analytical Parameters, Methodologies, Reporting limits, Holding Times, Container Volumes and Types, and Preservation
5.2 Sediment Matrix Analytical Parameters, Methodologies, Reporting limits, Holding
Times, Container Volumes and Types, and Preservation

FIGURES

1.1 Typical Schematic of an Oil Water Separator

1.0 INTRODUCTION

The Caltrans Best Management Practice (BMP) Retrofit Pilot Program is a comprehensive water quality monitoring study to evaluate the removal of contaminants in stormwater runoff from Caltrans roads and facilities through a series of BMP pilot installations. The overall objectives of this portion of the program are to document BMP contaminant removal efficiency and technical feasibility of retrofitting Caltrans facilities with water quality controls.

This Appendix of the Operations, Maintenance, and Monitoring Plan (OMM) applies to Oil Water Separators (OWS). Refer to Volume I of the Operations, Maintenance, and Monitoring Plan for the Caltrans BMP Retrofit Pilot Program for project-specific requirements and procedures. Refer to the consultant's monitoring equipment manuals and stormwater monitoring Standard Operating Procedures (SOPs) for details related to equipment installation, equipment maintenance, and storm monitoring. Maintenance, safety, documentation, and storm monitoring tasks will be carried out according to the procedures detailed in this plan. Additional measures may be necessary due to unforeseen or temporary changes to the work environment at these sites.

1.1 Retrofit BMP Description

The OWS acts as physical separator of oil and water. Oil and water enter the OWS and immediately the flow velocity is slowed to allow for the settling of solids. Coalescing plate separators act as means for oil droplets to collide and agglomerate and thus become larger globules. These larger globules rise rapidly to the oil water interface, where separated oil accumulates. The coalescing of oil droplets results in an increased rate of efficiency of oil separation.

The OWS has been designed to optimally handle total runoff from storm events that are less than a 1-year average storm. When the hydrocarbons (HCs) reach 25% of total liquid depth of the OWS, a vacuum truck will pump out the HCs and handle the waste according to federal, state, and local regulations. Oil depth should not be allowed to get greater than 50% of total depth. After the HCs have been removed, the sediment levels should also be checked. If it is determined that the sediment has reached a depth of 12 inches, the sediment must also be pumped out. The OWS will also have double containment to guard against any leakage of waste oils. Figure 1.1 shows a typical schematic of an OWS.

Figure 1.1
Typical Schematic of an Oil/Water Separator

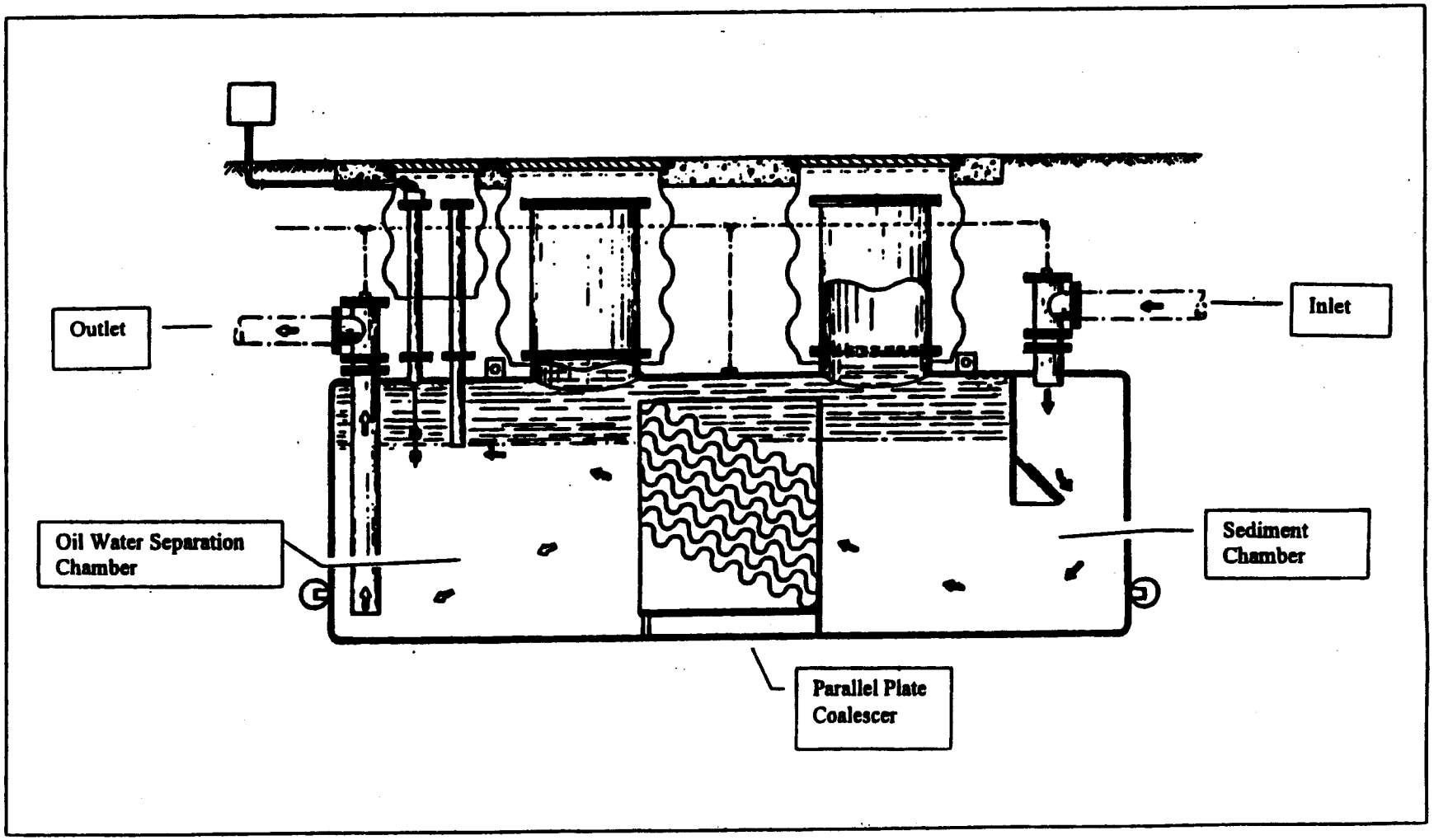

1.2 Evaluating BMP Performance

To effectively evaluate the performance of an OWS pilot facility, the following objectives will be met:

- Determine the quantity of runoff treated by the BMP.
- Determine the reduction (or change) in concentrations between the influent and the effluent from the BMP.
- Determine and document the level of effort required to maintain the BMP at optimal effectiveness.
- Determine and document BMP performance evaluation criteria relative to the qualitative benefits.

To effectively estimate the removal of contaminants from an OWS, the quantity and quality of runoff entering the OWS will be compared to the quantity and quality of water discharged from the OWS. These data will allow a direct estimate of the total reduction in mass loadings for a variety of contaminants.

The effectiveness of an OWS is also related to the implementation of strict maintenance procedures and the documentation of empirical observations. Trash, sand, oil and sludge build-up, excessive turbulence in the OWS, excessively high feed rates, detergents or surfactants and improper maintenance of the OWS components may directly affect the performance of the OWS. It should also be noted that oils with a specific gravity greater than 0.95 require special treatment.

1.3 Deployment Criteria

Stormwater samples will be collected from the EDB for up to ten storm events over a two wet seasons, weather permitting. Storms targeted for sampling will be separated by a minimum of 48 hours (72 hours preferably). This facility will be inspected per the guidelines given in Section 4.0 of the Field Guidance Notebook (FGN), which include a mandatory inspection after every storm greater than 0.50 inch.

Based on the rainfall requirements needed to generate monitorable flows in and out of the pilots, Caltrans has developed a refined monitoring team deployment criteria. The refined deployment criteria defines when to chase storms based on season, storm forecasts, and the current count of successfully monitored storms.

The deployment season, in which monitoring teams remain "on-call" and fully staffed, will be restricted to the portion of the year when rainfall is most probable and better predictable. Summer showers are not seen as predictable events, and dry watersheds and BMPs will retain more water which results in less effluent.

The deployment season will start on October 1. The season shall end after 3 weeks of dry weather where less than 0.2" of rainfall occurs in the San Diego or LA areas, but end no sooner than April 1 and not later than May 30th. This approach will provide a plan that adjusts to wet or dry springs.

The following criteria will decrease false starts, while allowing teams to continue to chase storms based on promising storm forecasts. The criteria will be used for all pilots, regardless of drainage area size or land use.

“Forecast-Unlikely” set to less than 0.25” rain and less than 50% probability, (Decision = "No Go")

“Forecast-Marginal” set to 0.25” or greater and 50 –75% probability, (Caltrans Decision)

“Forecast-Highly Probable” set to 0.25” or greater and greater than 75% probability. (Decision = "Go")

Forecast information will be gathered as indicated in the OM&M manuals (e.g., internet sources). As always, if conditions happen to allow paired samples to be successfully taken for any storm larger than 0.1", that sampling would be considered as a successful event, which would count towards fulfilling Scoping Study requirements.

When a specific pilot is successfully monitored for the total required storms per the applicable Scoping Study, the decision to further deploy to monitor that pilot will fall to Caltrans and no commitment to monitor beyond the terms of the Scoping Studies can be made at this time.

1.4 Data Collection and Compilation

1.4.1 Data Requirements

The following data will be collected to assess the performance and maintenance aspects of an OWS:

- Water quality and quantity data of runoff into and discharge from the detention basin from flow-composite samples and first-flush grab (as soon as possible after the start of runoff) samples for at least eight storm events during two wet seasons.
- Rainfall data recorded as a function of time, from all rainfall events during the study period.
- Continuous water/hydrocarbon level data.
- Observations of water quality, weather, antecedent conditions, spills, BMP operation, etc.
- Documentation records of inspections and maintenance activities performed.

1.4.2 Data Management

Consultants will be responsible for data management. Overall management of the data will be consistent with established Caltrans procedures for stormwater monitoring projects.

The consultant's Sample Control group will be responsible for tracking the analytical process to assure that laboratories are meeting the required turnaround times and are providing a complete deliverable package. Sample Control will also be responsible for accumulating copies of site visit logs, inspection logs, facility maintenance records, vector control sampling data, and logged rainfall and hydrographic data. Sample Control will receive the original hard and electronic copies from the laboratory, system managers, and field crews, and verify completeness and log dates of receipt. A copy of the data sets and log sheets will be filed in Sample Control's central filing system and another copy will be provided to the Database Manager. The originals will then be transferred to the Task Order Manager and filed with all other project documentation to maintain complete project records.

Laboratories, system managers, and vector control crews will be requested to provide data in both hard copy and electronic formats. The forms of electronic submittals will be provided to the laboratories to ensure that the files can be imported into the project database with a minimum of editing. A relational database will be used for all data. Laboratory data will be maintained and managed using Microsoft Excel® and Microsoft Access®. Files from the influent and effluent monitoring stations will be stored in the same database system and be linked to the laboratory database. The sampling system files will include rainfall, sampling, and flow data. Site characteristics will be stored in a separate file and linked to both the chemical and sampling system files to enable useful data queries.

Data will be submitted to Caltrans based on "Caltrans Statewide Data Management Plan—Data Reported Protocol and Database," a technical memorandum dated 23 April 1998 from Larry Walker Associates to all task order managers.

1.4.3 Data Analysis

Differences in storm characteristics, which can lead to differences in analyte loadings of monitored storm events, will be evaluated for each year of monitoring. Specific storm parameters such as total rainfall, average intensity, peak intensity, and antecedent conditions will be measured to determine if these parameters correlate with analyte concentrations and loads in stormwater discharges.

Contingent on the amount and quality of actual data collected, first year influent and effluent sampling results will be characterized by descriptive statistics and statistical comparisons. Event mean concentrations (EMCs) will be measured for each water quality parameter at both locations. Annual statistics based upon assumed log-normal distributions also will be calculated for each water quality parameter.

Differences in mean concentrations of analytes between storm events and locations will be considered to be statistically significant at $P \leq 0.10$. Although the acceptable level of alpha error is typically set at $P \leq 0.05$, this decision level was increased due to the relatively high coefficients of variation (CV) encountered with stormwater data.

Care will be taken to guard against false positive or negatives, so that widely varying storm event characteristics will not result in misinterpretation of the stormwater runoff data.

Widely varying storm event characteristics will be considered when evaluating BMP efficiencies based on stormwater runoff data. Empirical observations, maintenance activities, and vector control activities will be compiled and compared to water quality and quantity data.

1.5 Encroachment Permit and Restrictions

Visitation of an OWS requires a Caltrans Encroachment Permit (Exhibit 9.3, Tab 9 of the *FGN*). Encroachment Permits will be made by either making an addendum to an existing permit or by applying for a new permit. A brief description of the project, site location, and any traffic control measures will be submitted with the application. The Caltrans District Encroachment Permit Office will be contacted for further information and direction (phone numbers can be found under Tab 2 in the *FGN* portion of the Volume II OMM Plan).

2.0 OPERATION AND MAINTENANCE

2.1 Operation and Maintenance Needs

The operational and maintenance needs of an OWS are:

- The OWS should be filled with water at all times.
- Exclusion of detergents and solvents, their presence retards the recovery of oil.
- Wastewater containing a high dissolved solids concentration must be excluded.
- Periodic hydrocarbon and sediment removal to optimize performance.
- Monitoring of the OWS for oil levels.
- Monitoring of the OWS for sludge buildup.
- When spills occur at the Maintenance Station, quickly take care of all spills with absorbent or spill kits to prevent overloading the OWS.
- Removal of all debris.
- Preventative maintenance on monitoring equipment.

2.2 Inspection Frequency

The facility will be inspected and all inspection visits will be completely documented (refer to Section 2.8):

- Once a month at a minimum.
- After every large storm (after every storm monitored or those storms with more than 0.5 inches of precipitation).
- On a weekly basis during extended periods of wet weather.

2.3 Aesthetic and Functional Maintenance

Functional maintenance is important for performance and safety reasons. Aesthetic maintenance is important for public acceptance of stormwater facilities. Since the OWS is an underground tank and concealed, there are no aesthetic maintenance activities.

Both forms of maintenance will be combined into an overall Stormwater Management System Maintenance Program. Maintenance activities will be carried out by the OWS' respective consultant. Maintenance items are included in the checklist/log forms found under Tab 5, in the *FGN*. Maintenance activities will conform to the practices specified in this plan. Refer to the manufacturer's operation and maintenance manual for more details on operation and maintenance of an OWS.

2.3.1 Functional Maintenance

Functional maintenance has two components:

1. Preventive maintenance.
2. Corrective maintenance.

Preventive Maintenance

Preventive maintenance that will be done on a regular basis is detailed in the checklists contained in Appendix III. Preventive maintenance activities to be instituted at an OWS are:

- **Water Level**. The OWS should be filled with water at all times for proper operation.
- **Exclusion of Detergents and Solvents**. The gravity separator will not remove chemical emulsions or dissolved hydrocarbons. The presence of these chemicals retards the recovery of oil.
- **Exclusion of Wastewater Containing High TDS**. Wastewater such as untreated sanitary sewage cannot be removed by the gravity separator due to its emulsifying tendency.
- **Trash and Debris**. Debris and trash will be removed to reduce the potential for inlet structures and other components from becoming clogged and inoperable during storm events.
- **Sediment Removal**. Sediments will be removed before they threaten OWS operation or storage volume. The pre-separator chamber should be checked with a wooden gauge stick to insure the level of sand, dirt or debris has accumulated to a point no higher than 12” from the bottom of the tank. Disposal of sediments is discussed in Section 2.6 and will comply with federal, state and local requirements.
- **Oil Removal**. The separator chamber needs to be checked to insure the level of oil and grease has accumulated to a point no lower than the radius of the separator (about 50% of the separator volume). Remove the accumulated oil with a suction hose or vacuum truck when oil has accumulated between 25% and 50% of the separator volume. Clean when oil is removed, or as conditions warrant.
- **Mechanical Components**. Maintenance will be performed on the coalescing screen and the parallel plate coalescer. These parts will need to be inspected at the beginning and end of the wet season for clogging. Hot, high-pressure water may be used to wash out these parts. All mechanical components will be operated during each maintenance inspection to assure continued performance.

Corrective Maintenance

Corrective maintenance is required on an emergency or non-routine basis to correct problems and to restore the intended operation and safe function of an OWS. Corrective maintenance activities include:

- **Removal of Debris and Sediment**. Sediment, debris, and trash, which threaten the ability of an OWS to store or convey water, will be removed immediately and properly disposed of (see Section 2.6).
- **Structural Repairs**. Repairs to any structural component of an OWS will be made promptly (e.g., within 10 working days). Qualified contractors will conduct repairs where structural damage has occurred.
- **General Facility Maintenance.** In addition to the above elements of corrective maintenance, general corrective maintenance will address the overall facility and its associated components. If corrective maintenance is being done to one component, other components will be inspected to see if maintenance is needed.

2.4 Maintenance Frequency

The maintenance indicator document, included as Appendix V, lists the schedule of maintenance activities to be implemented at a pilot OWS.

2.5 Equipment, Resources, and Tools Needed

All resources and the following equipment are needed by inspection personnel:

- Gloves, safety hat, safety glasses, safety boots, pen or pencil, and approved facility plans.
- A Locke level or other surveying equipment.
- Flashlight.
- Crowbar.
- Tape measure and other measuring device (survey rod), such as a clear PVC tube, to determine sediment accumulation depths.
- Local sediment control, or stormwater management handbooks.
- Rain and foul weather gear.
- This appendix and *FGN*.
- Maintenance logs.
- Copies of necessary inspection reports and forms.
- Encroachment permit.
- Business cards or other identification.
- Camera to document field conditions.

Except for the items contained on site, the maintenance contractors will supply all equipment, tools, and resources required for maintenance activities at an OWS. At a minimum, these contractors will supply the following:

- Dump trucks, equipment transports, and other hauling equipment.

- Pumps.
- Mechanics tools.
- Locke level or survey equipment, tape measures, and sediment probes.
- Camera with film.
- Other necessary safety equipment (gloves, boots, hard hats, reflective vests, safety glasses, traffic control lighting, and confined space entry equipment).

The following items for maintenance and inspection activities will be supplied on site:

- Wooden poles for gauging sediment at a manhole covering the sediment chamber.
- A staff gauge will be used to calibrate monitoring equipment.
- Trash containers will be located on site.

The consultants will supply to the maintenance contractors:

- This Appendix, *FGN*, and approved facility plans.
- Encroachment Permit.
- Logbook containing maintenance logs.

2.6 Debris and Sediment Disposal

Caltrans is responsible for any hazardous waste generated at an OWS as the owner/generator. Consultants responsible for operating, maintaining, and monitoring the OWSs will be responsible for their removal, testing, and disposal of the hazardous waste by independent contractor. Disposal of sediment, debris, and trash will be contracted out in accordance with all federal, state and local regulations. Potential disposal services contractors are listed Table 2.1.

Prior to disposal, sediments will be characterized to determine the extent and type of chemical contamination. Evidence of oil and grease, antifreeze, solvents, fuel, hydrogen sulfide, and any other noxious substance will be noted. Observations will be used to determine if more than the standard analyte list of analytes is required. The standard analyte list (found in Table 5.2) is based on highway analytes that have a strong potential to exceed Title 22 hazardous waste criteria (State of California, 1985). Methods used to sample sediments are discussed in Subsection 5.7. While analytical results are pending, sediments will remain *in-situ*. Dependent on quantities and site conditions, handling of

Table 2.1
Waste Disposal Services in Southern California

Laidlaw/Rollins (OPC) 5765 Alba Street Los Angeles, CA 92011 Ph: (213) 585-5063 Fax: (213) 589 5443 EPA: CAD050806850	Laidlaw Environmental Services 5295 S. Garvey Rd. Westmoreland, CA 92281 Ph: (619) 334-9400 Fax: (619) 344-9405 EPA: CAD000633164

TSM Recovery and Recycling 3422 W. Pico Blvd. Los Angeles, CA 90019 Ph: (213) 735-9443 EPA: CAD108040858	Pacific Resource Recovery 3150 E. Pico Blvd. Los Angeles, CA 90023 Ph: (800) 499-7145 Fax: (213) 780-9940 EPA: CAD008252405
Demenno Kerdoon Environmental Services 3650 E. 26th Street Los Angeles, CA 90023 Ph: (213) 268-5056 Fax: (213) 268-9672 EPA: CAD080033681	U.S. Filter Recovery Services 5375 S. Boyle Ave. Vernon, CA 99058 Ph: (213) 277-1500 Fax: (213) 588-0094 EPA: CAD097030993

removed sediments will be determined just prior to the time of removal maintenance. Sediments suspected to be contaminated will be kept separate. Onsite storage of sediments will be avoided to the extent possible. Disposal contractors will be preferred to immediately transport sediments offsite for disposal at the time of removal.

2.7 Hazardous Waste

Suspected hazardous wastes will be analyzed to determine disposal options. All hazardous materials generated on site will be handled and disposed of according to local, state, and federal regulations. A solid or liquid waste is considered a hazardous waste if it exceeds the criteria listed in the California Code of Regulations, Title 22, Article 11 (State of California, 1985).

2.8 Checklist for Inspectors and Operation and Maintenance Personnel

Facility Inspection and Observational checklists or logs will be filled out during each visit to an OWS. These will be kept in a record book (field logbook) to ensure that the OWS is maintained at optimum levels throughout the monitoring period. The field logbook will also contain storm monitoring data sheets, and instrument calibration logs. A separate logbook containing Facility Inspection Checklists and Maintenance Log Sheets will be kept. A separate logbook also will be kept for vector control and management logsheets (Appendix IV of Volume II).

Refer to Forms C through F, under Tabs 4 and 5 of the *FGN* for checklists related to the inspection and maintenance requirements of an OWS.

3.0 VECTOR CONTROL AND MANAGEMENT

Constructing retrofit pilot BMPs will modify the existing stormwater drainage systems. Because such retrofitting may create opportunities for disease carrying or nuisance organisms to flourish, insects such as (mosquitoes and midges) or rodents may have to be controlled. Vector control and abatement will be performed in accordance with Appendix IV and by subcontracted Vector Control Districts.

4.0 VEGETATION MANAGEMENT

There are no vegetation management concerns regarding OWS units, as they are an in-ground, subsurface units that will not support vegetation or encourage rodent vectors.

5.0 SAMPLING AND MONITORING

This section details the monitoring equipment to be used at an OWS, sampling protocols, analytes to be tested, and quality assurance/quality control guidelines.

5.1 Equipment

5.1.1 Water Quality Samplers

No water quality samplers will be used at the OWS facility. Grab samples will be manually collected only.

5.1.2 Flow Monitoring

A flow measuring discharge flume will be used at the discharge sampling point. A bubbler flow meter (or equivalent) will be used in conjunction with the discharge flume.

5.1.3 Rain Gauge

The rain gauge to be used at an OWS will be a “tipping bucket” design that incorporates a small “bucket” which holds a known amount of rainfall. When the bucket is filled, it tips the water out, momentarily closes a switch, and then resets itself and starts the process again. The data logger/controller counts each switch closure to accumulate rainfall totals. The rain gauges used at this site will tip after every 0.01 inch of rain.

5.1.4 Power

The source of primary power for both sampling systems will come from a local power source, on site.

5.1.5 Telecommunications

Cellular modem transceivers will be used to provide remote telecommunication access to the monitoring equipment. The ability to access a sampling station, monitor the status of the station in real-time, and recover data allows for more cost effective, efficient monitoring.

A high-performance base station antenna will be installed at the top of a mast that also supports the rain gauge. A filter will be installed in the lead-in from the antenna to prevent damage to the sampling station equipment due to nearby lightning strikes.

5.1.6 Equipment Enclosures

No walk-in fiberglass enclosures will be used at the OWS facility unless deemed necessary.

5.2 Maintenance and Calibration

A complete maintenance program will be performed at an OWS after each storm event during the monitoring period, or in the absence of rain, on a monthly basis. Maintenance will include checking the performance of all the equipment, inspecting and clearing intake structures, cleaning equipment, and performing all necessary equipment calibrations. Calibrations will be conducted in accordance to specifications in the individual component manuals.

All stormwater equipment maintenance visits will be thoroughly documented. Written documentation includes the action taken at a site as well as the date performed. Accurate and thorough records of every station visit will be maintained and will aid in the evaluation of an OWS' performance. The log illustrated as Form I of the *FGN* to will be used to document maintenance and calibrations.

5.3 Preparation and Logistics

Success of the sampling effort requires careful preparation and planning to assure that high quality samples are obtained in association with each storm event.

5.3.1 Weather Tracking

Weather tracking will be the responsibility of the Task Order Manager and Storm Control personnel. During the wet weather season, the weather will be continually monitored with increased frequency as incoming systems are predicted. Sources of weather information to be used to track incoming storms include the following: National Weather Service, Weather Watch Service, Weather Network (WeatherNet), the Alert system from San Diego County, public broadcast information available on the Weather Channel and local news stations, and radar and satellite images downloaded from the Internet (e.g., www.weather.com).

5.3.2 Mobilization and Staffing

A staffing plan, which designates personnel and equipment for each facet of the storm monitoring, will be developed as soon as a potential event is forecast. All crews will consist of two individuals. The staffing plan will include the following information:

- Personnel needed for each position.
- Storm Control
  - Shift Leader
  - Crew Chiefs
  - Crew Assistants
- Shift and zone (pilot facilities manned by a single crew) designations.
- Equipment mobilization.
- Communication channels.

Communication Channels

Communication Channels will be established for personnel to contact each other before and during a storm event. Phone lists with home and work numbers and other key contacts will be made available to all potential crew members. Two-way radio or cellular telephone communication links to field crews are essential for efficient stormwater monitoring.

Storm Kit Equipment List

- Keypad/display
- 9-pin cable from keypad to data logger
- Full set of keys (on floatable bobber)
- Flashlights (2)
- Maps for all required areas
- Large flat screwdriver
- Small flat screwdriver
- Umbrella
- High quality alkaline D-cell batteries
- Spare sample labels
- Pencils and indelible markers
- Desiccant (packages and jar)
- Diagonal clipper
- Electrical tape
- Cable ties (assorted sizes)
- Utility knife
- Ziplock baggies (assorted sizes)
- Labeling tape
- Polyethylene gloves
- Rubber bands
- Gaff

Storm Mobilization List

- Storm kit
- Log books
- pH meter
- Paper towels
- DI (de-ionized) water squirt bottles
- Tape gun with clear packaging tape
- pH grab bottles
- Spare sample labels
- Ice scoop
- Sample control paperwork
- Extra fine indelible markers
- Grab sample bottles
- Coolers and ice
- Grab pole with dipper
- DI water (3-gallon jug)
- Two-way radio or cellular phone
- Personal rain gear
- Any necessary safety gear
- Trash bags

5.3.3 Monitoring Station Preparation

Prior to a storm event, the OWS monitoring stations will be made ready to sample.

General Inspection

A brief physical inspection of the equipment will be made to make certain that there are no obvious problems. If possible, the intake will be cleared of debris; at sites with confined entry access, this is only possible if the safety requirements listed in Appendix II are met.

Documentation

Upon each site visit, whether during storm mode or not, records of the visit will be accurately recorded on the field form (Form I, Tab 6, *FGN*), and the Empirical Observation Checklist will be completed (Form H, Tab 6, *FGN*).

General Visitation Data

During each station visit, several display locations will be recorded. The log sheets will be used as a guide to the proper display locations to record. The following data will be recorded:

- Flume stage.
- Velocity (ft/s).
- Q (flow in cfs).
- Station ID.
- Data logger Battery Voltage.
- Flow Meter Battery Voltage.
- Cellular Equipment Battery Voltage.

5.4 Storm Monitoring

5.4.1 Storm Monitoring Office

The main objective of the Storm Monitoring Office is to update field crews on the status of their stations. This will greatly reduce the amount of time a crew will spend driving during storms. The monitoring of stations from a remote computer consists of calling each station and recording certain data for evaluation. When it is determined that flow is conducive to sampling, a field crew will be called and alerted to the status of the station. All remote interrogation of the storm stations will be logged using Form K of the *FGN*.

Generally, the Storm Monitoring Office is also the storm control position. This means that all critical decisions regarding the status of storm monitoring are made with input from the Storm Monitoring Office. Therefore, this position requires awareness of the

latest weather forecasts to make informed decisions on the continued monitoring of the storm.

5.4.2 Post Sampling Procedures

Declaring the end of a storm event may be difficult at an OWS as the tank may hold water for longer than 48 hours and effluent flow may continue out of the basin. Thus, storm events can overlap. If storm events begin to overlap, two criteria will be used to either continue sampling or end sampling. If the effluent has 75% storm capture or more and 8 or more sample aliquots, monitoring will stop and the stations will be shut down. If the effluent has less than 75% storm capture or less than 8 sample aliquots, the influent and effluent sampling will continue monitoring the event until the event stops raining.

After a storm event has ended, the following items will be taken care of, and everything will be well documented in the field logbook.

1) The station will be physically inspected to determine if any damage was sustained during the storm event. The flow sensor will be inspected to determine if it is blocked by debris, or the intake is clogged. (This is only possible if all confined space requirements are met).
2) The flow data will be retrieved. This will be done via modem from the remote monitoring computer.
3) All battery voltages will be checked; batteries that are low will be replaced.
4) An Empirical Observation Checklist will be completed (refer to Form H, Tab 6, *FGN*) one time during the event.

Data Retrieval

Data will be retrieved (dumped) from the data logger after each storm event during the storm season, and, during dry weather, approximately every month.

Chain-of-Custody Forms

When all of the grab samples have been collected, the paperwork will be filled out to ensure a smooth transfer of samples to the analytical laboratory. Chain-of-custody forms will be filled out in detail describing the type of sample, the quantity of samples, and the time that the samples were collected. These forms will accompany the samples to the laboratory.

5.4.3 Evaluation

Upon termination of a storm event monitoring, evaluation of the OWS performance will be documented and reviewed before the samples collected are deemed valid. Evaluation of a monitoring station's performance is based on the answers to the following questions:

- Was the storm representative of the effectiveness range of the OWS?
- Did the OWS work as designed?

5.4.4 Grab Sampling

Total petroleum hydrocarbons (TPH) and oil & grease samples will be collected as grab samples from both the influent and effluent stations. While samples for oil & grease will be collected from four storms each year, samples for TPH diesel, oil, and gasoline fraction analyses will be collected twice during each monitoring year.

It is imperative that collected grab samples are transferred to a designated meeting location immediately after the sampling has been completed. Chain-of-custody forms for the samples will be completed and transport of the samples to the analytical laboratory will be coordinated to ensure that all samples are handled and analyzed within the proper holding times to the extent possible.

It is essential that the following sample handling protocols be followed when collecting grab samples to keep contamination to a minimum:

- Turn the vehicle engine OFF to minimize exposure of the sample to exhaust fumes.
- Keep all sample containers in clean coolers until sampling is actually initiated.
- Store all filled sample bottles in clean coolers at 4°C.
- Keep the bottle lid clean and free of debris while the bottle is open.

Grab samples will be collected as near to the sampling point as possible. When unable to collect a sample near the intake, the sample will be collected as near the center of flow as possible or in an area of sufficient velocity to ensure good mixing. Both sampling points require a grab pole to collect the necessary grab samples. All sample bottles will be fitted snugly into the bottle holder and the bottles will be seated on the upstream side of the grab pole to reduce potential contamination. The bottle will be filled with the mouth of the bottle faced into the current, if possible. Also, the bottle will be labeled before it is filled as it is nearly impossible to write on wet bottles, and the station I.D. will be listed on the bottle to coincide with the station sampled.

Each type of grab sample may require special treatment to ensure the quality of the sample and the safety of the sampler. The preservative in the sample bottles is usually a

concentrated acid, so care will be taken that the preservative does not come into contact with the skin. Powder-free nitrile gloves will be worn when handling sample containers. Both types of grab samples are discussed below.

TPH analyses will be performed for diesel, gasoline, and oil fractions and reported separately for each. Samples to be analyzed for TPH gasoline fraction will be preserved with a concentrated acid (HCl). Containers for TPH diesel and oil are unpreserved. The sample bottles will be filled to below the neck and just above the shoulder. The bottle will not be overfilled because the preservative will be washed out. If the bottle is just slightly overfilled, a small amount of sample will be poured off after the preservative has mixed with the sample. A small amount of headspace is required in the containers to allow for expansion if the sample freezes while iced during shipping. These grab samples will be collected as soon as possible after runoff is detected.

Oil and Grease sample containers are preserved with a concentrated acid (H_2SO_4), so they will be handled carefully. The sample bottles will be filled to below the neck and just above the shoulder. The bottle will not be overfilled because the preservative will be washed out. If the bottle is just slightly overfilled, a small amount of sample will be poured off after the preservative has mixed with the sample. A small amount of headspace is required in the containers to allow for expansion if the sample freezes while iced during shipping. These grab samples will be collected as soon as possible after runoff is detected.

5.5 Sample Tracking and Handling

Water samples will be kept properly chilled and transferred to the analytical laboratory within holding times to achieve the highest quality data possible. To ensure proper tracking and handling of the samples, documentation will accompany the samples from the initial pickup to the final extractions and analysis. This documentation includes: Chain-of-custody forms, and Purchase Orders as required (see Appendix III for example forms). These forms or equivalent will be used to track and handle samples.

Collected samples will be labeled with the following information:

- Date.
- Time.
- OWS name and number.
- Influent or effluent sampling location.
- Preservative.
- Collector’s initials.
- Sample I.D. number.
- Analyte(s) to be analyzed.
- Grab or composite sample.

When the storm has been evaluated and samples from each station accounted for, a duplicate station and a QA/QC station will be selected based on stormwater volumes available. Duplicate and QA/QC sample bottles will be labeled, recorded on the chain-of-custody form, and transported to the analytical laboratory.

Grab samples will be transported to the appropriate laboratory as soon as the grab sampling is completed. All samples will be properly logged on the chain-of-custody form and kept chilled in coolers. There will also be a field duplicate and extra water collected for QA/QC samples. These QA/AC grab samples will be collected at one of each consultant's BMPs during each storm event monitored. The sampling stations will be selected by Storm Control for collecting the duplicate grab samples. The crews monitoring the stations will be fully briefed on the procedures for collecting QA/QC samples, and will be familiar with the sample identification numbering scheme for these samples because they are to be submitted to the laboratory as blind samples. These samples will be labeled, recorded on the chain-of-custody form, and transported to the analytical laboratory.

Each sample collected will receive a unique alphanumeric code (sample I.D. number) for tracking. This code will be standard for all samples and contain information as to the station, date, and sequential monitoring event number. The following is an example of this code:

074201-IN-32898-001

Where:

074201 = Site number of the BMP.
IN = Influent sampling point; EF = effluent sampling point.
32898 = the Julian day and year
001 = the first storm event monitored during this program at this location

If multiple bottles are used or needed to capture a single event, the last data field will indicate the bottle number and the total bottles in that sampling event (i.e., 001-1/3, 001-2/3, 001-3/3 for a three-bottle collection scheme).

A set of QA/QC samples will be provided with each type of sample analyzed for each storm event. The analytical laboratory may also require additional QA/QC samples if one type of analysis is to be run in more than one batch.

Duplicate samples, MS/MSDs, and replicate/splits need not all be from the same station. However, per storm event (or batch run), all these QA/QC samples will be analyzed for the standard analytes as field samples. Most field QA/QC samples are submitted blind to the analytical laboratory, however, additional sample volumes provided to the laboratory for laboratory replicates or matrix spikes and matrix spike duplicates will be clearly

identified. The main types of QA/QC samples that will be utilized for this study are as follows:

Duplicate Analyses - These analyses will be performed for both grab samples and composite samples and will require an additional set of sample containers to be sub-sampled. The results will allow evaluation of sampling error introduced by both field sampling and laboratory analyses by showing the reproducibility or precision of the sample collection and analyses. Duplicate samples will be sent “blind” to the laboratories. One duplicate sample will be collected from one of each consultant’s sampling locations during each storm event sampled and analyzed for the full list of analytes.

Duplicate samples will be identified by adding 500 to the sequential storm event number. For example, a duplicate sample for the site identified above will be:

074201-IN-32898-501

Matrix Spike and Matrix Duplicate Spike (MS/MSD) - The laboratory will require additional sample volumes for analyses that require matrix spikes and matrix spike duplicates to evaluate precision and accuracy of the laboratory analytical method, and to evaluate any matrix interference. MS/MSDs are analyzed for their analyte(s) and then spiked with a known amount of analyte(s). One MS/MSD sample will be run on TPH samples from one of each consultant’s sampling locations during each storm event sampled.

MS/MSD samples will be indicated on chain-of-custody forms by clearly identifying that the sample is for MS/MSD purposes.

Laboratory Replicate/Split - This QA/QC analysis will require additional sample volumes. It is a duplicate analysis performed on the same sample and evaluates the repeatability (precision) of the analytical laboratories' results. One split sample will be run from one of each consultant’s BMP sampling locations during each storm event sampled and analyzed for the full list of analytes.

Laboratory replicate/split samples will be indicated on chain-of-custody forms by clearly identifying that the sample is for laboratory replicate/split sample purposes.

5.6 Laboratory Selection, Sample Container Preparation, and Analytical Methods

5.6.1 Laboratory Selection

The selected laboratories have extensive experience with environmental samples and have the ability to provide rapid response to meet critical holding time requirements for analytes requiring expeditious analysis. Laboratories are certified by the California Department of Health Services for the requested analyses. Refer to Tab 2 in the *FGN* for specific laboratory listings.

5.6.2 Holding Times, Sample Bottles, and Prep aration

The laboratories will be responsible for providing appropriate sample containers and, when necessary, with preservatives for each analysis. Table 5.1 provides a summary of sample volumes required for each analysis, along with the types of containers, holding times, and preservative. Because additional volumes are necessary for laboratory QA/QC, sample containers will provide at least twice the volume necessary to perform the requested analysis. The volume of the stormwater composite from each site is often the critical factor in determining the volume of sample that can be provided to the laboratory. The Project Task Order Manager and/or Storm Control personnel, in conjunction with the laboratories, will determine the allocation of sample volume for different analyses if sample volumes are not adequate to provide additional volume for each analysis. Table 5.1 lists the analyses along with a priority ranking. Also listed on Table 5.1 are the analytical methods and reporting limits.

5.6.3 Project Reporting limits

Recommended analytical methods and reporting limits for this project are listed in Table 5.1. The reporting limits in this table are target reporting limits. In some cases, reporting limits may need to be adjusted due to limited sample volumes or potential matrix interference. In such cases, appropriate data qualifiers will be applied to the associated data.

Table 5.1
Stormwater Matrix
Analytical Parameters, Methodologies, Reporting Limits, Holding Times, Container Volumes and Types, and Preservation

Analyte	Priority Rank	Reporting Limit	Units	Analytical Technique	Method Number	Holding Time	Minimum Sample Volume	Preferred Volume and Container Type[1]	Preservation
Conventionals									
pH	1	0.1	Unit	Electrode	EPA 150.1	Immediately[2]	100 mL	1-100 mL glass/plastic	4°C
Specific Conductance	1	1.0	µmhos/ cm	Electrometric	EPA 120.1	Immediately[2]	500 mL	1-500 mL glass/plastic	4°C
Hardness	5	2	mg/L	Titrimetric/ Colorimetric	EPA 130.2	6 months	100 mL	1-200 mL glass/plastic	HNO_3 to pH<2, 4°C
Total Suspended Solids	1	1	mg/L	Dried Filter Weight	EPA 160.2	7 days[3]	1 L	1-500 mL glass/plastic	4°C
Organics[4]									
Total Petroleum Hydrocarbons – Diesel/Oil	Grab	250/200	µg/L	GC	EPA 8015M	14 days	1 L	2-1L amber glass	4°C
Total Petroleum Hydrocarbons - Gasoline	Grab	50	µg/L	GC	EPA 8015M	14 days	2-40 mL	3-40 mL VOA vials	4°C, HCl to pH<2
Oil and Grease	Grab	5	mg/L	IR/Gravimetric	EPA 413.2/1664HEM	28 days	1 L	2-1L amber glass	4°C and H_2SO_4 to pH<2

1. Analytes with the same preservative can be combined into a single container if the same laboratory is performing the analyses.
2. pH and Specific Conductance will be measured by the laboratory immediately upon receipt of the samples.
3. 7 days based upon limit for measuring TSS/no regulatory limit.
4. TPH grab samples will be collected for two storms each monitoring year.

5.6.4 Laboratory Data Package Deliverables

Laboratories will be required to provide a three-week turnaround on all deliverables. The deliverable package will include a hard copy and electronic data files. The hard copy will include standard narratives identifying any analytical or QA/QC problems and corrective actions. The electronic data files will contain all information found in the hard copy reports submitted by the laboratories. Individual data sets will be submitted as either Microsoft Excel workbook files or as Microsoft Access database files in accordance with the Caltrans Data Management Plan – Data Reporting Protocol and Database (CTSW-TM-98-005). Each consultant will be responsible for laboratory coordination and data management.

5.7 Sediment Sampling and Testing for Disposal Purposes

This subsection describes the sample collection procedures and analyses for assessing the quality of surface sediment removed from an OWS for disposal. Evidence of oil and grease, antifreeze, solvents, fuel, hydrogen sulfide, and any other noxious substance will be noted. Observations will be used to determine if more than the standard list of analytes is required. Observations will be documented on a checklist form (Form G, Tab 5, *FGN*). The standard list (Table 5.2) is based on highway contaminants that have the potential to exceed hazardous waste criteria. After laboratory analysis, results will be compared to regulatory limits listed in California Code of Regulations (CCR) Title 22, Section 66261.24 and Department of Toxic Substances Control (DTSC) variances. Based on this evaluation, proper disposal methods will be chosen.

5.7.1 Sediment Collection

Procedures in EPA Publication *Test Methods for Evaluating Solid Waste, Physical/Chemical Methods (SW-846)* provide a method for determining the mean concentration of a given contaminant within a soil mass and the appropriate number of samples necessary to calculate this mean to the specified confidence interval. Initial sampling will generate a minimum number of samples/analyses as described below. Additional sample analyses may be required to meet the confidence levels given in *SW-846*, therefore archiving of samples will be necessary. Archived samples will be appropriately preserved and analyzed within the maximum holding time specified in Table 5.2. None of the samples will be allowed to be composited. The Quality Assurance/Quality Control (Appendix III) describes the QA/QC objectives for surface sediment samples. The minimum number of discrete samples initially required is given below:

- Drums: A minimum of one sample will be collected from each drum.
- Stockpiles less than 10 cubic yards: A minimum of two samples will be collected, one from each half of the stockpile. Sampling points will be selected randomly within each half.

1. Don personal protective equipment.
2. Locate the sample point in the sediment chamber.
3. Collect the sample using a submersible sediment sampler or equivalent. Ensure that the sample is collected near the center of the sediment layer and at the location that was randomly selected. Great care must be taken not to make contact with the metal casing.
4. Fill one 8-ounce glass jar with a portion of the sample and close the container with the cap, using care not to aerate (volatilize) the sample. This jar will be labeled and analyzed for TRH and VOCs.
5. Homogenize the other portion of the sample in a disposable bowl using a disposable spatula or spoon. Fill a second 8-ounce glass jar with this portion of the sample and close the container with the cap. This sample will be labeled and analyzed for metals.
6. Wipe the outside of each sample container with a clean paper towel.
7. Record the sampler's initials, date, and time on the pre-labeled sample bottle.
8. Place the sample containers in individual zip-top plastic bags and seal the bags.
9. Immediately pack the samples into a chilled cooler.
10. Record the required information on the Chain-of-Custody Form.
11. Document the sampling event, recording information in the designated field logbook.
12. Repeat the above steps until the minimum number of samples has been collected.

5.7.2 Sediment Analyses

Unless observations indicate additional testing, all surface sediment samples submitted to the laboratory will be analyzed for analytes listed in Table 5.2 using Title 22 criteria (State of California, 1985). This table also lists the required reporting limits, analytical holding times, required preservation, and container sizes and types. Laboratory turn around times and data deliverables will be same as those for the stormwater samples.

Table 5.2
Sediment Matrix
Analytical Parameters, Methodologies, Reporting limits, Holding Times, Container Volumes and Types, and Preservation

Parameter	Method	Units	Reporting Limit	Maximum Holding Time	Preservation	Container Size/Type(1)
Total Petroleum Hydrocarbons (TPH)	EPA 418.1	mg/kg	10	28 days	$4^{o}C$	8 oz glass jar
Volatile Organic Compounds	EPA 8260B	mg/kg	SW – 846 (5) requirements	14 days	$4^{o}C$	8 oz glass jar
California Code of Regulations (CCR), Title 22 Metals(2):	EPA 6020/7471	mg/kg	SW – 846 (5) requirements	180 days 28 days for mercury	$4^{o}C$	8 oz glass jar
California Code of Regulations (CCR), Title 22 Waste Extraction Test (WET) Metals(3):	STLC Extraction	mg/L	SW – 846 (5) requirements	180 days 28 days for mercury	4° C	NA
Toxicity Characteristic Leaching Procedure (TCLP) Metals(4):	TCLP 1311	mg/L	SW – 846 (5) requirements	180 days 28 days for mercury	4° C	NA

(1) Each sample will be collected in two 8 oz glass jars
(2) California Code of Regulation (CCR), Title 22 Metals (Sb, As, Ba, Be, Cd, Cr (total), Co, Cu, Hg, Pb, Mo, Ni, Se, Ag, Tl, V, and Zn). Initial waste characterization results may lead to a shorter list of metals for subsequent sediment disposal.
(3) Any sample for total metals that are below the Total Threshold Limit Concentration [TTLC] but exceed the ten times Soluble Threshold Limit Concentration (STLC) will be further analyzed using the WET procedure. WET extracts will be analyzed only for metals which exceed the ten times STLC criteria. Sediments associated with total metal results that exceed TTLC values are automatically considered hazardous and therefore do not need to undergo the WET procedure.
(4) If any of the WET-soluble concentrations are equal to or greater than the TCLP regulatory thresholds, analyze the waste by TCLP.
(5) "Test Methods for Evaluating Solid Waste, Physical /Chemical Methods". SW-846, Update III.(SW-846)

5.8 Empirical Observations

5.8.1 Purpose of Empirical Observations

Performance assessments of BMP facilities cannot be fully ascertained through analytical methods. "Empirical" observations are also critical in determining the overall performance of implemented water quality management practices and in ensuring that the practices are maintained at optimum levels. Other factors such as maintenance activities, environmental variability, and physical processes, which cannot be determined analytically, can greatly influence the performance of a particular BMP. Factors such as rainfall quantity and rainfall intensity, will be assessed through physical measurements. Other components such as trash build-up, sediment deposition, and runoff appearance can best be assessed through careful documented observations.

5.8.2 Guidelines

All observations will be succinct but also complete. For an OWS performance evaluation, the following observations will be taken at the influent location, and effluent location:

- Meteorological characteristics (present and preceding period).
- Hydrologic and hydraulic characteristics (flowing and/or standing water).
- Inlet conditions (problems affecting performance).
- Water quality appearance (visual, olfactory) to make a rough assessment of changes in water quality.
- Solids deposition (trash and debris, sediments, organics) and resuspension.
- Oil skimming and absorbing equipment (coalescing screen).
- Outlet conditions (problems affecting performance).
- Mosquitoes and other vectors.
- Structural condition of facility.
- Monitoring equipment condition.

5.8.3 Checklist for Sampling and Monitoring Personnel

Refer to Form H, Tab 6, of the *FGN* for a checklist (log form) that will be completely filled out by sampling and monitoring personnel during each storm event visit to the facility.

6.0 REFERENCES

Robert Bein, W. Frost and Associates. 1997. Scoping Study, Retrofit Pilot Program, Caltrans District 7. Calif. Dept. Trans., Sacramento, CA.

City of Austin. 1988. Environmental Criteria Manual. Drainage Utility Department, Austin, Texas.

Eaton, A.D., L.S. Clesceri, and A.E. Greenberg, eds. 1995. Standard Methods for the Examination of Water and Wastewater, 19th Edition. American Public Health Association, American Water Works Association, and the Water Environment Federation.

State of California 1985. California Code of Regulations, Title 22, Article 11. Criteria for the identification of hazardous and extremely hazardous wastes. Register 85, No. 3.1-12-85, Para. 66693-66796, pp. 1800.75-1800.86.

Watershed Management Institute. 1997. Operation, Maintenance, and Management of Stormwater Management Systems. Watershed Management Institute, Ingleside, MD.

Young, G.K., et al. 1996. Evaluation and Management of Runoff Water Quality. Publication No. FHWA-PD-96-032. U.S. Department of transportation, Federal Highway Administration, Office of Environmental Planning.

Areo Tank. 1997, Oil Water Separators.

7.0 MANUFACTURER'S LITERATURE

The following literature is to be used as guidance in operation and maintenance of the OWS.

CALTRANS
BMP RETROFIT PILOT PROGRAM

DISTRICT 7, LOS ANGELES

BMP OPERATION, MAINTENANCE, AND MONITORING PLAN

VOLUME II

APPENDIX I-G

MULTI-CHAMBERED TREATMENT TRAINS

September 1999

TABLE OF CONTENTS

Section **Page G-**

1.0 INTRODUCTION 1
1.1 Retrofit BMP Description....1
1.2 Evaluating BMP Performance 5
1.3 Deployment Criteria 5
1.4 Data Collection and Compilation 6
1.4.1 Data Requirements....6
1.4.2 Data Management 7
1.4.3 Data Analysis....7
1.5 Encroachment Permit and Restrictions 8

2.0 OPERATION AND MAINTENANCE 9
2.1 Operation and Maintenance Needs....9
2.2 Inspection Frequency....9
2.3 Aesthetic and Functional Maintenance 9
2.3.1 Aesthetic Maintenance....9
2.3.2 Functional Maintenance....10
2.4 Maintenance Frequency....11
2.5 Equipment, Resources, and Tools Needed 11
2.6 Debris and Sediment Disposal....12
2.7 Hazardous Waste 13
2.8 Checklist for Inspectors and Operation and Maintenance Personnel 14

3.0 VECTOR CONTROL AND MANAGEMENT 15

4.0 VEGETATION MANAGEMENT 17

5.0 SAMPLING AND MONITORING....19
5.1 Equipment Installation....19
5.1.1 Water Quality Samplers....19
5.1.2 Flow Monitoring....21
5.1.3 Rain Gauge 21
5.1.4 Power 21
5.1.5 Telecommunications....21
5.1.6 Equipment Enclosures 22
5.2 Maintenance and Calibration....22
5.3 Preparation and Logistics 22
5.3.1 Weather Tracking 22
5.3.2 Mobilization and Staffing 22
5.3.3 Monitoring Station Preparation 24

TABLE OF CONTENTS (Continued)

5.4 Storm Monitoring 27
5.4.1 Storm Procedure 27
5.4.2 Sample Bottle Replacement 28
5.4.3 Storm Monitoring Office 28
5.4.4 Post Sampling Procedures 28
5.4.5 Evaluation 29
5.4.6 Grab Sampling 30
5.5 Sample Tracking and Handling 31
5.6 Laboratory Selection, Sample Container Preparation, and Analytical Methods 34
5.6.1 Laboratory Selection 34
5.6.2 Holding Times, Sample Bottles, and Preparation 34
5.6.3 Project Reporting Limits 35
5.6.4 Laboratory Data Package Deliverables 37
5.7 Sediment Sampling and Testing for Disposal Purposes 37
5.7.1 Sediment Collection 37
5.7.2 Sediment Analyses 38
5.8 Empirical Observations 41
5.8.1 Purpose of Empirical Observations 41
5.8.2 Guidelines 41
5.8.3 Checklist for Sampling and Monitoring Personnel 41

6.0 REFERENCES 43

TABLES

2.1 Waste Disposal Services in Southern California
5.1 Stormwater Matrix Analytical Parameters, Methodologies, Reporting Limits, Holding Times, Container Volumes and Types, and Preservation
5.2 Sediment Matrix Analytical Parameters, Methodologies, Reporting Limits, Holding Times, Container Volumes and Types, and Preservation

FIGURES

1.1 Typical Schematic of a Multi-chambered Treatment Train

1.0 INTRODUCTION

The Caltrans Best Management Practice (BMP) Retrofit Pilot Program is a comprehensive water quality monitoring study to evaluate the removal of contaminants in stormwater runoff from Caltrans roads and facilities through a series of BMP pilot installations. The overall objectives of this portion of the program are to document BMP contaminant removal efficiency and technical feasibility of retrofitting Caltrans facilities with water quality controls.

This Appendix of the Operations, Maintenance, and Monitoring Plan (OMM) applies to Multi-chambered Treatment Trains (MCTTs). Refer to Volume I of the Operations, Maintenance, and Monitoring Plan for the Caltrans BMP Retrofit Pilot Program for project-specific requirements and procedures. Refer to the consultant's monitoring equipment manuals and stormwater monitoring Standard Operating Procedures (SOPs) for details related to equipment installation, equipment maintenance, and storm monitoring. Maintenance, safety, documentation, and storm monitoring tasks will be carried out according to the procedures detailed in this plan. Additional measures may be necessary due to unforeseen or temporary changes to the work environment at these sites.

1.1 Retrofit BMP Description

As the name implies, the MCTT incorporates a series of water treatment devices, which principally comprises a trapping catch basin followed by a two-chambered treatment tank that is intended to reduce a broad range of toxicants (Figure 1.1). As runoff enters the trapping catch basin, it passes over aeration media (small column packing balls) that are designed to remove highly volatile air components (if present) and to capture large debris such as leaves and paper. A depressed sump section in the catch basin serves as the grit chamber, where heavier sand and grit can fall out and settle before reaching the two-chambered tank.

As water exits the trapping catch basin, it enters the first chamber of the tank, which serves as an enhanced settling basin to remove smaller suspended particles. Flow enters the bottom of the tank and is directed up through inclined tube settlers to slow water velocity, which enhance sedimentation. The tube settlers are supported off the tank floor to allow space for sediment collection. The water is then transferred (pumped) to the final filter chamber containing a mixed filtration media, which is a 50/50 combination of peat moss and sand. The peat moss is included to improve the removal of metals. As water flows downward by gravity through the media it enters a gravel layer that incorporates a collection system of perforated underdrain pipes. The underdrain system collects and transports the treated water to a sump that discharges to the original storm drainage system. The MCTT is sized to totally retain runoff from a 1-year, 24-hour storm.

Figure 1.1
Typical Schematic of a Multi-chambered Treatment Train

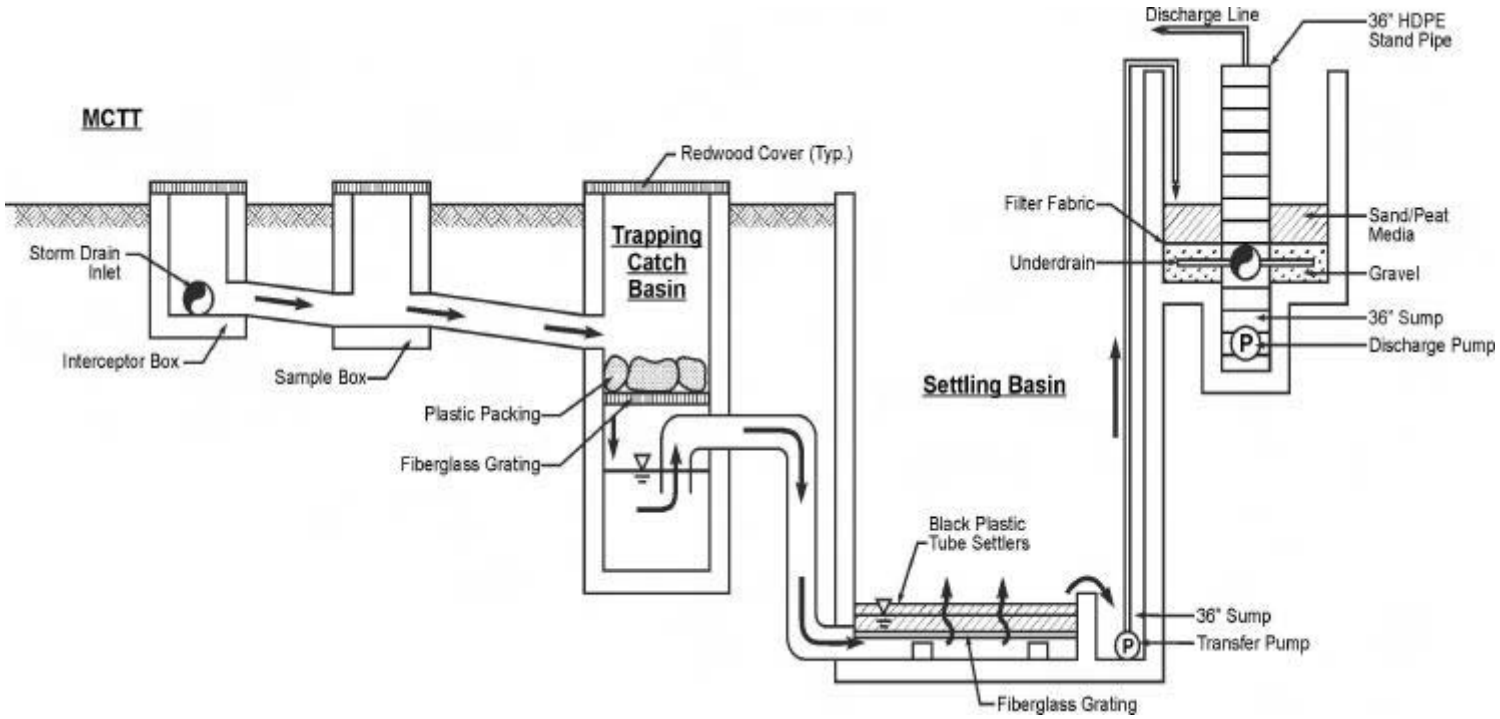

1.2 Evaluating BMP Performance

To effectively evaluate the performance of an MCTT pilot facility, the following objectives will be met:

- Determine the quantity of runoff treated by the BMP.
- Determine the reduction (or change) in concentrations between the influent and the effluent from the BMP.
- Determine and document the level of effort required to maintain the BMP at optimal effectiveness.
- Determine and document the level of effort required to control vectors of human disease and nuisance insects at the BMP.
- Determine and document BMP performance evaluation criteria relative to the qualitative benefits.

To effectively estimate the removal of contaminants from an MCTT, the quantity and quality of runoff entering the MCTT will be compared to the quantity and quality of water discharged from the MCTT. This data will allow a direct estimate of the total reduction in mass loadings for a variety of contaminants.

The effectiveness of an MCTT is also related to the implementation of strict maintenance procedures and the documentation of empirical observations. Items such as maintenance of storage volumes, discharge rates, trash build-up, and infiltration capability may directly affect the performance of this MCTT.

1.3 Deployment Criteria

Stormwater samples will be collected from the EDB for up to ten storm events over a two wet seasons, weather permitting. Storms targeted for sampling will be separated by a minimum of 48 hours (72 hours preferably). This facility will be inspected per the guidelines given in Section 4.0 of the Field Guidance Notebook (FGN), which include a mandatory inspection after every storm greater than 0.50 inch.

Based on the rainfall requirements needed to generate monitorable flows in and out of the pilots, Caltrans has developed a refined monitoring team deployment criteria. The refined deployment criteria defines when to chase storms based on season, storm forecasts, and the current count of successfully monitored storms.

The deployment season, in which monitoring teams remain "on-call" and fully staffed, will be restricted to the portion of the year when rainfall is most probable and better predictable. Summer showers are not seen as predictable events, and dry watersheds and BMPs will retain more water which results in less effluent.

The deployment season will start on October 1. The season shall end after 3 weeks of dry weather where less than 0.2in.of rainfall occurs in the San Diego or LA areas, but end no sooner than April 1 and not later than May 30th. This approach will provide a plan that adjusts to wet or dry springs.

The following criteria will decrease false starts, while allowing teams to continue to chase storms based on promising storm forecasts. The criteria will be used for all pilots, regardless of drainage area size or land use.

“Forecast-Unlikely” set to less than 0.25 in.rain and less than 50% probability, (Decision = "No Go")

“Forecast-Marginal” set to 0.25 in.or greater and 50 –75% probability, (Caltrans Decision)

“Forecast-Highly Probable” set to 0.25 in.or greater and greater than 75% probability. (Decision = "Go")

Forecast information will be gathered as indicated in the OM&M manuals (e.g., Internet sources). As always, if conditions happen to allow paired samples to be successfully taken for any storm larger than 0.1in., that sampling would be considered as a successful event, which would count towards fulfilling Scoping Study requirements.

When a specific pilot is successfully monitored for the total required storms per the applicable Scoping Study, the decision to further deploy to monitor that pilot will fall to Caltrans and no commitment to monitor beyond the terms of the Scoping Studies can be made at this time.

1.4 Data Collection and Compilation

1.4.1 Data Requirements

The following data will be collected to assess the performance and maintenance aspects of an MCTT:

- Water quality and quantity data of runoff into and discharge from the detention basin from flow-composite samples and first-flush grab (as soon as possible after the start of runoff) samples for at least ten storm events for at least eight storm events during two wet seasons.
- Rainfall data recorded as a function of time, from all rainfall events during the study period.
- Observations of water quality, weather, antecedent conditions, spills, BMP operation, etc.

- Documentation records of inspections and maintenance activities performed.
- Records of vector control measures taken.

1.4.2 Data Management

Consultants will be responsible for data management. Overall management of the data will be consistent with established Caltrans procedures for stormwater monitoring projects.

The consultant's Sample Control group will be responsible for tracking the analytical process to assure that laboratories are meeting the required turnaround times and are providing a complete deliverable package. Sample Control will also be responsible for accumulating copies of site visit logs, inspection logs, facility maintenance records, vector control sampling data, and logged rainfall and hydrographic data. Sample Control will receive the original hard and electronic copies from the laboratory, system managers, and field crews, and verify completeness and log dates of receipt. A copy of the data sets and log sheets will be filed in Sample Control's central filing system and another copy will be provided to the Database Manager. The originals will then be transferred to the Task Order Manager and filed with all other project documentation to maintain complete project records.

Laboratories, system managers, and vector control crews will be requested to provide data in both hard copy and electronic formats. The forms of electronic submittals will be provided to the laboratories to ensure that the files can be imported into the project database with a minimum of editing. A relational database will be used for all data. Laboratory data will be maintained and managed using Microsoft Excel® and Microsoft Access®. Files from the influent and effluent monitoring stations will be stored in the same database system and be linked to the laboratory database. The sampling system files will include rainfall, sampling, and flow data. Site characteristics will be stored in a separate file and linked to both the chemical and sampling system files to enable useful data queries.

Data will be submitted to Caltrans based on "Caltrans Statewide Data Management Plan—Data Reported Protocol and Database," a technical memorandum dated 23 April 1998 from Larry Walker Associates to all task order managers.

1.4.3 Data Analysis

Differences in storm characteristics, which can lead to differences in analyte loadings of monitored storm events, will be evaluated for each year of monitoring. Specific storm parameters such as total rainfall, average intensity, peak intensity, and antecedent conditions will be measured to determine if these parameters correlate with analyte concentrations and loads in stormwater discharges.

Contingent on the amount and quality of actual data collected, first year influent and

effluent sampling results will be characterized by descriptive statistics and statistical comparisons between the influent and effluent. Event mean concentrations (EMCs) will be measured for each water quality parameter at MCTT locations. Annual statistics based upon assumed log-normal distributions also will be calculated for each water quality parameter.

Differences in mean concentrations of analytes between storm events and locations will be considered to be statistically significant at $P \leq 0.10$. Although the acceptable level of alpha error is typically set at $P \leq 0.05$, this decision level was increased due to the relatively high coefficients of variation (CV) encountered with stormwater data.

Care will be taken to guard against false positive or negatives, so that widely varying storm event characteristics will not result in misinterpretation of the stormwater runoff data.

Widely varying storm event characteristics will be considered when evaluating BMP efficiencies based on stormwater runoff data. Empirical observations, maintenance activities, and vector control activities will be compiled and compared to water quality and quantity data.

1.5 Encroachment Permit and Restrictions

Visitation of an MCTT requires a Caltrans Encroachment Permit *(Exhibit 9.3, Tab 9 of the FGN*)]. Encroachment Permits will be made by either making an addendum to an existing permit or by applying for a new permit. A brief description of the project, site location, and any traffic control measures will be submitted with the application. The Caltrans District Encroachment Permit Office will be contacted for further information and direction (phone numbers can be found under Tab 2 in the *FGN* portion of the Volume II OMM Plan).

2.0 OPERATION AND MAINTENANCE

2.1 Operation and Maintenance Needs

The operational and maintenance needs of an MCTT are:

- Periodic sediment removal to optimize performance.
- Replacement of the media when needed.
- Replacement of the filter fabric when needed.
- Removal of all debris.
- Preventative maintenance on monitoring equipment.

2.2 Inspection Frequency

The facility will be inspected and all inspection visits will be completely documented:

- Once a month at a minimum.
- After every large storm (after every storm monitored or those storms with more than 0.5 inches of precipitation).
- On a weekly basis during extended periods of wet weather.

2.3 Aesthetic and Functional Maintenance

Functional maintenance is important for performance and safety reasons. Aesthetic maintenance is important for public acceptance of stormwater facilities.

Both forms of maintenance will be combined into an overall Stormwater Management System Maintenance Program. Maintenance activities will be carried out by each MCTT's respective consultant. Maintenance items are included in the checklist/log forms found under Tab 5 in the *FGN*. Maintenance activities will conform to the practices specified in this plan.

2.3.1 Aesthetic Maintenance

The following activity will be included in the aesthetic maintenance program:

- **Graffiti Removal.** Graffiti will be removed in a timely manner to improve the appearance of the filter and its related monitoring equipment, and to discourage additional graffiti or other acts of vandalism.

2.3.2 Functional Maintenance

Functional maintenance has two components:

1. Preventive maintenance.
2. Corrective maintenance.

Preventive Maintenance

Preventive maintenance that will be done on a regular basis is detailed in the checklists contained in Form E, under Tab 5 of the *FGN*. Preventive maintenance activities to be instituted at an MCTT are:

- **Trash and Debris.** Debris and trash will be removed to reduce the potential for inlet structures, trash racks, and other components from becoming clogged and inoperable during storm events.
- **Sediment Removal**. Sediments will be removed before they threaten MCTT operation or storage volume. When the level of sediment has reached approximately 6 inches in the main settling chamber, the sediment should be removed. The grit chamber sediment will be removed when it has exceeded a limit of 2 feet. To remove sediment, a block of tube settlers will need to be removed. Then the chamber must be drained using a portable pump. A thin film of silt is expected to collect on the filter fabric. Once it has reached an estimated height of 1/8 inches, the filter fabric will be cleaned. Disposal of sediments is discussed in Section 2.6 and will comply with federal, state and local requirements. All chamber sediments will be tested and characterized for proper disposal options.
- **Mechanical Components.** Maintenance will be performed on pumps, fabric filters, gates, locks, and access hatches in accordance with the manufacturers' recommendations. All mechanical components will be operated during each maintenance inspection to assure continued performance.
- **Replacement of Filter Materials.** Major maintenance of these parts should occur at least every several years. The filter fabric (on top of the filter media) should be routinely cleaned every 6-12 months. If this does not speed up draw down, the media needs to be replaced. Typically the ion exchange/sorption capacity of the media should be replaced after 3-5 years. The renewing of the sorbent pillows (in the main settling chamber) occurs every 6-12 months.
- **Elimination of Mosquito Breeding Habitats.** The most effective mosquito control program is one that eliminates potential breeding habitats. To check the surface of the tanks for mosquitoes, a bailer should be dropped into the tanks. Mosquito control measures are discussed further in Section 3.0.

Corrective Maintenance

Corrective maintenance is required on an emergency or non-routine basis to correct problems and to restore the intended operation and safe function of an MCTT. Corrective maintenance activities include:

- **Removal of Debris and Sediment.** Sediment, debris, and trash, which threaten the ability of an MCTT to store or convey water, will be removed immediately and properly disposed of (see Section 2.6).
- **Structural Repairs.** Repairs to any structural component of an MCTT will be made promptly (e.g., within 10 working days). Designers and contractors will conduct repairs where structural damage has occurred.
- **Elimination of Mosquito Breeding Areas.** See Section 3.0 for controlling mosquitoes.
- **Fence Repair.** Timely repair of fences (e.g., within 10 working days) will be done to maintain the security of the site.
- **General Facility Maintenance.** In addition to the above elements of corrective maintenance, general corrective maintenance will address the overall facility and its associated components. If corrective maintenance is being done to one component, other components will be inspected to see if maintenance is needed.

2.4 Maintenance Frequency

The maintenance indicator document, included as Appendix V, lists the schedule of maintenance activities to be implemented at a pilot MCTT.

2.5 Equipment, Resources, and Tools Needed

All resources and the following equipment are needed by inspection personnel:

- Gloves, safety hat, safety glasses, safety boots, pen or pencil, and approved facility plans.
- A Locke level or other surveying equipment.
- Flashlight.
- Crowbar.
- Tape measure and other measuring device (survey rod), such as a clear PVC tube, to determine sediment accumulation depths.
- Local sediment control, or stormwater management handbooks.
- Rain and foul weather gear.
- This appendix and *FGN*.
- Maintenance logs.
- Copies of necessary inspection reports and forms.
- Encroachment permit.
- Business cards or other identification.

- Camera to document field conditions.

Except for the items contained on site, the maintenance contractors will supply all equipment, tools, and resources required for maintenance activities at an MCTT. At a minimum, these contractors will supply the following:

- Heavy earth moving equipment (loaders, backhoes, graders, draglines, and vacuum equipment).
- Dump trucks, equipment transports, and other hauling equipment.
- Shovels, picks, rakes, wheel barrels, and other hand tools.
- Pumps.
- Mechanics tools.
- Concrete tools.
- Locke level or survey equipment, tape measures, and sediment probes.
- Camera with film.
- Other necessary safety equipment (gloves, boots, hard hats, reflective vests, safety glasses, traffic control lighting, and confined space entry equipment).

The following items for maintenance and inspection activities will be supplied on site:

- Graduated PVC poles for gauging sediment depth in the main settling and grit chamber.
- Trash containers will be located on site.

The consultants will supply to the maintenance contractors:

- This Appendix, *FGN*, and approved facility plans.
- Encroachment Permit.
- Logbook containing maintenance safety logs.

2.6 Debris and Sediment Disposal

Caltrans is responsible for any hazardous waste generated at an MCTT as the owner/generator. Consultants responsible for operating, maintaining, and monitoring the MCTTs will be responsible for their removal, testing, and disposal of the hazardous waste by independent contractors. Disposal of sediment, debris, and trash will be contracted out in accordance with all local, state, and federal waste control programs. Potential disposal services contractors are listed in Table 2.1.

Table 2.1
Waste Disposal Services in Southern California

Laidlaw / Rollins (OPC) 5765 Alba Street Los Angeles, CA 92011 Ph: (213) 585-5063 Fax: (213) 589 5443 EPA: CAD050806850	Laidlaw Environmental Services 5295 S. Garvey Rd. Westmoreland, CA 92281 Ph: (619) 334-9400 Fax: (619) 344-9405 EPA: CAD000633164
TSM Recovery and Recycling 3422 W. Pico Blvd. Los Angeles, CA 90019 Ph: (213) 735-9443 EPA: CAD108040858	Pacific Resource Recovery 3150 E. Pico Blvd. Los Angeles, CA 90023 Ph: (800) 499-7145 Fax: (213) 780-9940 EPA: CAD008252405
Demenno Kerdoon Environmental Services 3650 E. 26th Street Los Angeles, CA 90023 Ph: (213) 268-5056 Fax: (213) 268-9672 EPA: CAD080033681	U.S. Filter Recovery Services 5375 S. Boyle Ave. Vernon, CA 99058 Ph: (213) 277-1500 Fax: (213) 588-0094 EPA: CAD097030993

Prior to disposal, sediments will be characterized to determine the extent and type of chemical contamination. Evidence of oil and grease, antifreeze, solvents, fuel, hydrogen sulfide, and any other noxious substance will be noted. Observations will be used to determine if more than the standard analyte list of analytes is required. The standard analyte list (found in Table 5.2) is based on highway analytes that have a strong potential to exceed California Code of Regulations (CCR) Title 22 hazardous waste criteria (State of California, 1985). Methods used to sample sediments are discussed in Subsection 5.7. Dependent on quantities and site conditions, handling of removed sediments will be determined just prior to the time of removal maintenance. Sediments suspected to be contaminated will be kept separate. Onsite storage of sediments will be avoided to the extent possible. Disposal contractors will be preferred to immediately transport sediments offsite for disposal at the time of removal.

2.7 Hazardous Waste

Suspected hazardous wastes will be analyzed to determine disposal options. All hazardous materials generated on site will be handled and disposed of according to local, state, and federal regulations. A solid or liquid waste is considered a hazardous waste if it exceeds the criteria listed in the CCR, Title 22, Article 11 (State of California, 1985).

2.8 Checklist for Inspectors and Operation and Maintenance Personnel

Facility Inspection and Observational checklists or logs will be filled out during each visit to an MCTT**.** These will be kept in a record book (field logbook) to ensure that the MCTT is maintained at optimum levels throughout the monitoring period. The field logbook will also contain storm monitoring data sheets, and instrument calibration logs. A separate logbook containing Facility Inspection Checklists and Maintenance Log Sheets will be kept. A separate logbook also will be kept for vector control and management logsheets (Appendix IV of Volume II).

Refer to Forms C through F, under Tabs 4 and 5 of the *FGN* for checklists related to the operational and maintenance requirements of the MCTT.

3.0 VECTOR CONTROL AND MANAGEMENT

Constructing retrofit pilot BMPs will modify the existing stormwater drainage systems. Because such retrofitting may create opportunities for disease carrying or nuisance organisms to flourish, insects such as (mosquitoes and midges) or rodents may have to be controlled. Vector control and abatement will be performed in accordance with Appendix IV and by subcontracted Vector Control Districts.

4.0 VEGETATION MANAGEMENT

The MCTT is an in-ground, subsurface treatment unit that will not require vegetation management.

5.0 SAMPLING AND MONITORING

This section details the monitoring equipment to be used at an MCTT, sampling protocols, and analytes to be tested.

5.1 Equipment Installation

The inflow and outflow conveyances for each MCTT will be equipped with a flow measuring device (either a flume or an area/velocity meter or both) and a sample intake. All flumes were cast into the conveyances during the construction phase. The flumes will incorporate some sort of depth measuring sensor. All flow sensors will be installed using manufacturer supplied hardware and in accordance to the manufacturers specifications. Sampler intakes will be mounted in each conveyance upstream of flumes or downstream of velocity/depth sensors. Stainless steel fasteners will be used to secure the intakes to the invert of the conveyances.

Flow measurement points were selected at locations that minimized flow measurement errors resulting from turbulence and surcharges. The following design specifications were considered during the engineering of the sampling points at each MCTT:

- The location at which flow will be measured will be at least 10 pipe diameters downstream and five pipe diameters upstream (or ten and five times the maximum anticipated head height) of any outfall, obstruction, inlet, or change in direction of the conveyance.
- The slope of the conveyance leading to the flow measuring point will be 2% or less.

These two requirements were considered to insure that flow is fully developed and is subcritical at the point where flow is measured.

Sensor wires and intake tubing will be routed through conduit from the manholes to equipment enclosures positioned on level ground near each manhole. The equipment enclosures will house the data logger/controller assemblies, samplers, cellular modem equipment, flow metering electronics, and batteries. A rain gauge will be mounted on a pole located adjacent to the inlet equipment enclosure. This pole will also support a cellular phone antenna and solar panel.

All components of each automatic sampling system used will undergo calibration and verification during installation and during maintenance and pre-storm visits.

5.1.1 Water Quality Samplers

The water quality samplers to be used at an MCTT will be automatic and composed of a peristaltic pump, a liquid detector, and a base to hold a sample bottle and ice. Each time a pre-determined volume of liquid passes the sampling point, the data logger/controller will signal the pump to deliver a self-calibrated sample volume. The suction hose used with

the sampler will be 3/8-inch pure Teflon® tubing. Therefore, the sampler will be equipped with 3/8-inch silicon peristaltic tubing and a 3/8-inch stainless steel or Teflon® intake strainer of low-flow design. Strainers will be attached to the invert of each conveyance using stainless-steel fasteners. Samples will be collected into borosilicate glass bottles.

Materials used in the collection of stormwater samples will meet strict criteria to prevent any form of contamination of the sample. These materials will allow for both inorganic and organic trace toxicant analyses from the same sampler and composite bottle. Only Teflon® and the highest grade of borosilicate glass are suitable for both trace metal and organic analyses from the same composite sample bottle. Bottles will be cleaned according to procedure described below or in an equivalent manner such that bottles are decontaminated to blank acceptance levels. Sample hoses will also receive a thorough cleaning annually prior to the wet season. They will not be cleaned after each storm event. These bottles and hoses will be evaluated through an extensive blanking process to verify that the composite bottles and sample hoses are contamination-free and appropriately cleaned for both of inorganic and organic analyses.

Cleaning Procedures for Composite Bottles

Bottles will be:

1. Rinsed three times with warm tap water.
2. Scrubbed with a clean plastic brush.
3. Soaked in a 2% detergent (e.g., Contrad®) solution for at least 48-hours.
4. Rinsed three times with tap water.
5. Rinsed five times with Milli-Q or equivalent water, rotating the bottle to ensure contact with the entire inside surface.
6. Rinsed three times with hexane while rotating the bottle, and then air-dried.
7. Rinsed six times with Milli-Q water.
8. Soaked in 2N nitric acid for a minimum of 24-hours.
9. Rinsed six times with Milli-Q water.

Cleaning Procedures for Teflon® Hose and Other Sampling Equipment

Teflon® hose and other sampling equipment will be:

1. Teflon hose will be rinsed three times with a 2% Micro® solution or equivalent. All other sampling equipment will be washed with a 2% Micro® solution and a clean plastic brush.
2. Rinsed three times with warm tap water.
3. Rinsed three times with Milli-Q or equivalent water.
4. Rinsed three times with 2N nitric acid.
5. Soaked at least 24-hours in 2N nitric acid.
6. Rinsed three times with Milli-Q water.

5.1.2 Flow Monitoring

A true flow-proportioned sample is a composite of individual sample aliquots that are collected for each set volume of water that passes by a sampling point. To obtain a valid composite sample, direct flow measurements will be made to control the sampling interval. At an MCTT, both primary and secondary flow metering devices will be used. A primary flow-measuring device is a hydraulic structure (e.g., flume) inserted into a channel that changes the level of liquid in or near the structure. By knowing the shape and dimensions of the hydraulic structure, flow through or over the structure is related to the liquid level by a mathematical relationship. A secondary flow metering device measures both liquid velocity and depth. Primary devices are preferable, unless hydraulic characteristics prohibit them.

Because the influent sampling point will most likely be submerged during storms, an area-velocity (AV) flow meter (or equivalent) will be installed. The depth and velocity sensors will be secured to the invert of the conveyance using a mounting ring supplied by the manufacturer. This same meter will record basin water levels for depths greater than 10 cm.

5.1.3 Rain Gauge

The rain gauge to be used at an MCTT will be a “tipping bucket” design that incorporates a small “bucket” which holds a known amount of rainfall. When the bucket is filled, it tips the water out, momentarily closes a switch, and then resets itself and starts the process again. The data logger/controller counts each switch closure to accumulate rainfall totals. The rain gauges used at this site will tip after every 0.01 inch of rain.

5.1.4 Power

The source of primary power for both sampling systems will come from a local power source, on site.

5.1.5 Telecommunications

Cellular modem transceivers will be used to provide remote telecommunication access to the monitoring equipment. The ability to access a sampling station, monitor the status of the station in real-time, modify storm criteria, download new programs, and recover data allows for more cost effective, efficient monitoring. In addition, modem communication allows for remote initiation of sampling within minutes.

A high performance base station antenna will be installed at the top of a mast that also supports the rain gauge and solar panel. A filter will be installed in the lead-in from the antenna to prevent damage to the sampling station equipment due to nearby lightning strikes.

5.1.6 Equipment Enclosures

Walk-in fiberglass enclosures will be used to house the samplers and associated electronic equipment. These enclosures are to be bolted to the concrete pads and are to be locked to secure the monitoring equipment.

5.2 Maintenance and Calibration

A complete maintenance program will be performed at an MCTT after each storm event during the monitoring period, or in the absence of rain, on a monthly basis. Maintenance will include checking the performance of all the equipment, checking power supplies, inspecting and clearing intake structures, cleaning contaminated equipment, and performing all necessary equipment calibrations. Calibrations will be conducted in accordance to specifications in the individual component manuals.

All stormwater equipment maintenance visits will be thoroughly documented. Written documentation includes the action taken at a site as well as the date performed. Accurate and thorough records of every station visit will be maintained and will aid in the evaluation of an MCTT's performance. The log illustrated in Form I, Tab 6, of the *FGN* to will be used to document maintenance and calibrations.

5.3 Preparation and Logistics

Success of the sampling effort requires careful preparation and planning to assure that high quality samples are obtained in association with each storm event.

5.3.1 Weather Tracking

Weather tracking will be the responsibility of the Task Order Manager and Storm Control personnel. During the wet weather season, the weather will be continually monitored with increased frequency as incoming systems are predicted. Sources of weather information to be used to track incoming storms include the following: National Weather Service, Weather Watch Service, Weather Network (WeatherNet), the Alert system from San Diego County, public broadcast information available on the Weather Channel and local news stations, and radar and satellite images downloaded from the Internet (e.g., www.weather.com).

5.3.2 Mobilization and Staffing

A staffing plan, which designates personnel and equipment for each facet of the storm monitoring, will be developed as soon as a potential event is forecast. All crews will consist of two individuals.

The staffing plan will include the following information:

- Personnel needed for each position.
  - Storm Control
  - Shift Leader
  - Crew Chiefs
  - Crew Assistants
- Shift and zone (pilot facilities manned by a single crew) designations.
- Equipment mobilization.
- Communication channels.

Storm Monitoring Equipment

Equipment needed for stormwater sampling includes all sampling equipment, sampling containers, safety equipment, personal rain gear, Storm Kits, and vehicles equipped with some type of mobile communication and highway safety equipment (see lists). All of the necessary equipment will be loaded into the appropriate vehicles early in the storm preparation sequence.

Storm Kit Equipment List

- Keypad/display
- 9-pin cable from keypad to data logger
- Full set of keys (on floatable bobber)
- Flashlights (2)
- Maps for all required areas
- Large flat screwdriver
- Small flat screwdriver
- Umbrella
- High quality alkaline D-cell batteries
- Spare sample labels
- Pencils and indelible markers
- Desiccant (packages and jar)
- Diagonal clipper
- Electrical tape
- Cable ties (assorted sizes)
- Utility knife
- Ziplock baggies (assorted sizes)
- Labeling tape
- Polyethylene gloves
- Rubber bands
- Rope, throw rope
- Gaff

Storm Mobilization List

- Storm kit
- Log books
- pH meter
- Paper towels
- DI (de-ionized) water squirt bottles
- Tape gun with clear packaging tape
- pH grab bottles
- Spare sample labels
- Ice scoop
- Sample control paperwork
- Extra fine indelible markers
- 20 liter bottles in 10 gallon containment buckets
- Grab sample bottles
- Coolers and ice
- Grab pole
- DI water (3-gallon jug)
- Two-way radio or cellular phone
- Personal rain gear
- Any necessary safety gear
- Trash bags

Communication Channels

Cellular modem transceivers will be used to provide remote telecommunication access to the monitoring equipment. The ability to access a sampling station, monitor the status of the station in real-time, modify storm criteria, download new programs, and recover data allows for more cost effective, efficient monitoring.

A high performance base station antenna with filter will be installed; the filter will be installed from the lead-in of the antenna to prevent damage to the sampling station equipment due to nearby lightning strikes.

5.3.3 Monitoring Station Preparation

Prior to a storm event, the MCTT monitoring stations will be made ready to sample. This preparation includes entering the correct “Volume to Sample” values, setting the autosampler and the data logger to sampling mode, pre-icing the composite sample bottle, and performing a general equipment inspection. The *FGN* will be consulted for specific details on station preparation.

Determination of Volume to Sample

The latest weather forecast prior to each storm event will be examined to determine the proper "Volume to Sample" value to enter into the system. The amount of expected rainfall, how the station performed during the previous storm and how much water is needed for analysis at the station for each storm event will be taken into consideration.

The "Volume to Sample" is entered as a number with units in kilo-cubic feet (kcf). To determine this number, the drainage area in acres and the runoff coefficient, which is a number that reflects the permeability of the land in the study area, is listed below. Use the following equation to determine the volume of water expected at an MCTT for a given rainfall:

A x B x C x 3.63 = volume in kcf

Where:

A = inches of rain
B = drainage area in acres
C = runoff coefficient for land area
3.63 = conversion factor: acre-inches to kilo-cubic feet

To determine how much water will pass the station between samples, divide this result by the number of samples needed to satisfy the water volume requirement for all analysis. A table will be supplied in the field logbook that indicates the Volume to Sample value needed to collect the correct sample amount of water for the amount of expected rainfall (see *FGN*).

After the proper Volume to Sample value is determined, it will be entered into the system before the rainfall starts. The runoff value will generally be entered from the remote computer. The value can also be entered upon arrival at the site before the system has entered storm mode. It is important that this value is accurate as possible; if the value is too high, the system will not collect enough water to be analyzed, and if the value is too low, the system may sample too fast to be monitored effectively (i.e., the percent storm capture will drop).

Prepare Sampler

The autosampler will be reset and programmed to take 78, 250-ml aliquots. Also all other user-entered parameters (tubing length, head height, bottle size, composite sample, sample upon one pulse, and enabled liquid detector) will be set correctly.

During each site visit, the state of the System Status Flags (switches) and Program Signature will also be recorded. These provide important information on the current sampling mode and overall integrity of the site program.

General Inspection

A brief physical inspection of the equipment will be made to make certain that there are no obvious problems such as broken conduit or a kinked hose. If possible, the intake will be cleared of debris; at sites with confined entry access, this is only possible if the safety requirements listed in Appendix II are met.

Documentation

Upon each site visit, whether during storm mode or not, records of the visit will be accurately recorded on the field form (see Form I, Tab 6, *FGN*). Whenever possible, any data being recorded by the sampling system (for example, time or current stage) will be verified. Also once during each site visit, the Empirical Observation Checklist will be completed (Form H, Tab 6, *FGN*).

General Visitation Data

During each station visit, several display locations will be recorded. The log sheets will be used as a guide to the proper display locations to record. The following data will be recorded at both the influent and effluent stations:

- Flume stage.
- Velocity (ft/s).
- Q (flow in cfs).
- Station ID.
- Data logger Battery Voltage.
- Flow Meter Battery Voltage.
- Cellular Equipment Battery Voltage.

Storm Visitation Data

Additional data will be recorded in the logbooks during storm monitoring, including:

- Volume (kcf)
  This is the volume of water that passed the station during the previous execution interval (one minute).

- Storm Sum
  This indicates the accumulated runoff volume in kilo cubic feet (kcf) that has passed the station since the last sample.

- Percent Storm Capture
  This indicates the percent of the storm effectively sampled by the system, and it provides a quick evaluation of the quality of the monitoring.

- Volume to Sample
  This value indicates the runoff volume (in kcf) that will pass the station before the system will take the next sample.

- Sample Count
  This number indicates the number of samples taken in the current bottle. It automatically re-zeroes every time a bottle is filled.

- Total Rain (inches)
  The total rainfall in inches since the start of the storm. This is accumulated each time that the rain bucket tips.

- Max Flow (day)
  This indicates the Julian day on which the maximum flow occurred.

- Max Flow (time)
  When this number is positive, it indicates that the system was sampling during peak stage. If this number is negative, sampling did not occur during the peak stage because the bottle was full.

- Max Stage (feet)
  This indicates the height of the maximum stage during the current storm.

- Max Flow (cfs)
  This indicates the maximum flow rate during the current storm.

- Storm Volume (kcf)
  This indicates the total volume of water that has flowed past the station since the beginning of the storm.

- Storm Volume Sampled (kcf)
  This indicates the total volume of water that flowed past the station while the system has been in storm mode.

After all data have been recorded, the system will be placed in low power mode and the keyboard unplugged.

5.4 Storm Monitoring

A priority objective of storm monitoring is to maximize the percent storm capture of the composite sample. This will be accomplished by ensuring that a composite bottle does not fill without being changed immediately. If a bottle does fill, the full sample bottle will be replaced and the system will be reset. To determine approximately when the bottle will fill and to ensure that the sampling process is not interrupted, the Storm Sum and the Volume to Sample will be evaluated. By examining how quickly the Storm Sum value is approaching the Volume to Sample value, the approximate time until the next sample is taken can be determined, as well as the approximate time until the bottle fills. The monitoring crew will be aware of the current status of each station in each of its BMP pilot facilities to determine which one will fill a bottle first so they can be on site as the bottle fills. If the station has been set properly for the amount of rainfall, changing the composite bottle will not be necessary. Volume to Sample settings will take into account the volume of sample required to meet all analytical needs. This study requires approximately 5 liters of sample to meet these needs.

The data logger pulses the autosampler to take a sample when the accumulated Storm Sum equals the Volume to Sample. The storm sum is then reset to zero and the process is repeated. This continues until the storm ends or the bottle fills. Ideally, the Volume to Sample value will be accurate for the amount of rainfall, and the bottle will not need to be changed during the storm. If, however, the rainfall is different than that predicted, a bottle may fill before the end of the storm. If this occurs, sampling will halt until the bottle is changed and the system is reset. Until the system is reset, part of the storm is not being sampled, and the percent capture will show a decrease. It is therefore imperative that the system is reset and the sample bottle is changed immediately to maintain 100% storm capture.

5.4.1 Storm Procedure

Upon arrival at a station during a storm event the status of the composite sample bottle will be checked immediately. If it is not necessary to change the bottle at that time, all of the appropriate data on the log sheets will be recorded and the necessary physical measurements and observations will be taken. An approximate time that the bottle will

fill will be determined, and, depending on how much time is available, the next station will be visited or wait until the bottle fills.

If the sample bottle is full, the system will be reset immediately, and the bottle replaced. When the bottle has been changed, the necessary station data will be filled in on the field log sheets.

5.4.2 Sample Bottle Replacement

The removal of the sample bottle from the sampler requires great care; the bottles are heavy when full and are very slippery when wet, as well as being expensive and fragile. More importantly, if the sample is lost or contaminated, all of the effort and expense of the storm monitoring process is wasted. In all cases, two people will be present to ensure the security of the bottle and of the sample itself. Extreme care will be taken not to kink the intake hose when handling the sampler.

The bottle number will be recorded in the logbook and the bottle will be labeled appropriately. When a new bottle has been put in place, the sampler reset to continue sampling. All full bottles will be kept iced.

5.4.3 Storm Monitoring Office

The main objective of the Storm Monitoring Office is to update field crews on the status of their stations. This will greatly reduce the amount of time a crew will spend driving during storms. The monitoring of stations from a remote computer consists of calling each station and recording certain data for evaluation. When it is determined that a sampling system is close to filling a bottle, a field crew will be called and alerted to the status of the station. All remote interrogation of the storm stations will be logged using Form K, Tab 6, of the *FGN*.

Generally, the Storm Monitoring Office is also the storm control position. This means that all critical decisions regarding the status of storm monitoring are made with input from the Storm Monitoring Office.

Therefore, this position requires awareness of the latest weather forecasts to make informed decisions on the continued monitoring of the storm.

5.4.4 Post Sampling Procedures

Declaring the end of a storm event may be difficult at an MCTT as the chambers may hold water for longer than 48 hours and effluent flow may continue out of the basin. Thus, storm events can overlap. If storm events begin to overlap, two criteria will be used to either continue sampling or end sampling. If the effluent has 75% storm capture or more and 8 or more sample aliquots, monitoring will stop and the stations will be shut down. If the effluent has less than 75% storm capture or less than 8 sample aliquots, the

influent and effluent sampling will continue monitoring the event until the event stops raining.

After a storm event has ended, the stations need to be shut down. The station will be left ready for the next storm event in case there is insufficient time for a maintenance visit between storms. The following items will be taken care of, and everything will be well documented in the field logbook.

1) The storm monitoring program will be reset to prepare for another storm event.
2) The sample bottle will be replaced and the sampler reset.
3) The station will be physically inspected to determine if any damage was sustained during the storm event. The flow sensor will be inspected to determine if it is blocked by debris, or the intake is clogged. (This is only possible if all confined space requirements are met).
4) The data will be retrieved. This will be done via modem from the remote monitoring computer.
5) All battery voltages will be checked; batteries that are low will be replaced.
6) An Empirical Observation Checklist will be completed (Form H, Tab 6, *FGN*) one time during the event.

Data Retrieval

Data will be retrieved (dumped) from the data logger after each storm event during the storm season, and, during dry weather, approximately every month.

Chain-of-Custody Forms

When all of the grab samples have been collected, the paperwork will be filled out to ensure a smooth transfer of samples to the analytical laboratory. Chain-of-custody forms will be filled out in detail describing the type of sample, the quantity of samples, and the time that the samples were collected. These forms will accompany the samples to the laboratory.

5.4.5 Evaluation

Upon termination of a storm event monitoring, evaluation of the influent and effluent stations' performance will be documented and reviewed before the samples collected are deemed valid. Evaluation of a monitoring station's performance is based on the answers to the following questions:

- Was the storm representative of the effectiveness range of the MCTT?
- Was capture of peak flow or runoff achieved at both sampling points?
- Did the equipment perform as designed throughout the duration of the storm event?
- Did the samplers accurately collect equal and reliable storm sample aliquots?
- Did the MCTT work as designed?

5.4.6 Grab Sampling

Total recoverable petroleum hydrocarbons (TRPH) and bacteria (fecal coliform) samples are unsuitable for collection by automatic means. TRPH is inappropriate because some material adheres to the surface of the tubing and the sample container. Automatic sampling for bacteria is inappropriate because the sampling equipment is not sterile after installation and exposure to the elements. Because these analytes are unsuitable for collecting using an automated approach, they will be collected as a grab sample from both the influent and effluent twice each storm monitoring year. The samples will be collected as close to the onset of discharge as possible.

It is imperative that collected grab samples are transferred to a designated meeting location immediately after the sampling has been completed. Chain-of-custody forms for the samples will be completed and transport of the samples to the analytical laboratory will be coordinated to ensure that all samples are handled and analyzed within the proper holding times to the extent possible.

It is essential that the following sample handling protocols be followed when collecting grab samples to keep contamination to a minimum:

- Turn the vehicle engine OFF to minimize exposure of the sample to exhaust fumes.
- Keep all sample containers in clean coolers until sampling is actually initiated.
- Store all filled sample bottles in clean coolers at 4°C.
- Keep the bottle lid clean and free of debris while the bottle is open.

Grab samples will be collected as near to the sampling point as possible. When unable to collect a sample near the intake, the sample will be collected as near the center of flow as possible or in an area of sufficient velocity to ensure good mixing. Both sampling points require a grab pole to collect the necessary grab samples. All sample bottles will be fitted snugly into the bottle holder and the bottles will be seated on the upstream side of the grab pole to reduce potential contamination. The bottle will be filled with the mouth of the bottle faced into the current, if possible. Also, the bottle will be labeled before it is filled as it is nearly impossible to write on wet bottles, and the station I.D. will be listed on the bottle to coincide with the station sampled.

Each type of grab sample may require special treatment to ensure the quality of the sample and the safety of the sampler. The preservative in the sample bottles is usually a concentrated acid, so care will be taken that the preservative does not come into contact with the skin. Powder-free nitrile gloves will be worn when handling sample containers. Both types of grab samples are discussed below.

TRPH analyses will be performed for diesel, gasoline, and heavy oil fractions and reported separately for each. Samples to be analyzed for TRPH gasoline fraction will be preserved with a concentrated acid (HCl), while containers for TRPH diesel and heavy oil are unpreserved. The sample bottles will be filled to below the neck and just above the

shoulder. The bottle will not be overfilled because the preservative will be washed out. If the bottle is just slightly overfilled, a small amount of sample will be poured off after the preservative has mixed with the sample. A small amount of headspace is required in the containers to allow for expansion if the sample freezes while iced during shipping. These grab samples will be collected as soon as possible after runoff is detected.

Fecal Coliform samples are preserved with a small sodium thiosulfate tablet. To retain the tablet while sampling, it will be removed from the container when it is dipped into the flow. The bacteria bottle will be turned over causing the tablet to fall onto the cap of the bottle; the cap will be removed and set somewhere that will prevent it from becoming contaminated (out of the rain). The sample bottle will be filled to the shoulder, the cap tipped so the tablet falls into the sample and the cap secured to the bottle. These grab samples will be collected as close as after runoff is detected.

Attempts will be made to maintain the 6-hour holding time for bacteria to the extent practical. However, storm field conditions may prove this holding time infeasible. A maximum holding time of 24 hours will be followed in accordance with the "Standard Methods for the Examination of Water and Wastewater," 18th Edition.

5.5 Sample Tracking and Handling

Water samples will be kept properly chilled and transferred to the analytical laboratory within holding times to achieve the highest quality data possible. To ensure proper tracking and handling of the samples, documentation will accompany the samples from the initial pickup to the final extractions and analysis. This documentation includes chain-of-custody forms (see *FGN* for example forms). These forms or equivalent will be used to track and handle samples.

Collected samples will be labeled with the following information:

- Date.
- Time.
- Project name.
- MCTT name and number.
- Influent or effluent sampling location.
- Preservative.
- Matrix.
- Collector's initials.
- Sample I.D. number.
- Analyte(s) to be analyzed.
- Grab or composite sample.

The analytical suite for each station depends upon the total volume of water collected for the storm event. A Priority Analysis Sheet will be used in conjunction with a Sample

Bottle Evaluation to determine the analytical suite for each station, based on the volume of water collected at that station, the volume to sample, and the percent storm capture. When the storm has been evaluated and samples from each station accounted for, a duplicate station and a QA/QC station will be selected based on stormwater volumes available. Duplicate and QA/QC samples will be prepared from the combined volume of the sample collected at the selected duplicate and QA/QC station.

Duplicate and QA/QC sample bottles will be labeled, recorded on the chain-of-custody form, and transported to the analytical laboratory.

Grab samples will be transported to the appropriate laboratory as soon as the grab sampling is completed, whereas the sample bottles for composite samples are transferred at the end of the storm event. All samples will be properly logged on the chain-of-custody form and kept chilled in coolers. There will also be a field duplicate and extra water collected for QA/QC samples. These QA/AC grab samples will be collected at one of each consultant's BMPs during each storm event monitored. The sampling stations will be selected by Storm Control for collecting the duplicate grab samples. The crews monitoring the stations will be fully briefed on the procedures for collecting QA/QC samples, and will be familiar with the sample identification numbering scheme for these samples because they are to be submitted to the laboratory as blind samples. These samples will be labeled, recorded on the chain-of-custody form, and transported to the analytical laboratory.

Each sample collected will receive a unique alphanumeric code (sample I.D. number) for tracking. This code will be standard for all samples and contain information as to the station, date, and sequential monitoring event number. The following is an example of this code:

074206-IN-32898-001

Where:

074206 = Site number of the BMP.
IN = Influent sampling point at the site; EF = effluent sampling point
32898 = Julian day and year
001= First storm event monitored during this program at this location

If multiple bottles are used or needed to capture a single event, the last data field will indicate the bottle number and the total bottles in that sampling event (i.e., 001-1/3, 001-2/3, 001-3/3 for a three-bottle collection scheme).

A set of QA/QC samples will be provided with each type of sample analyzed for each storm event. The analytical laboratory may also require additional QA/QC samples if one type of analysis is to be run in more than one batch.

Duplicate samples, MS/MSDs, and replicate/splits need not all be from the same station. However, per storm event (or batch run), all these QA/QC samples will be analyzed for the standard analytes as field samples. Most field QA/QC samples are submitted blind to the analytical laboratory, however, additional sample volumes provided to the laboratory for laboratory replicates or matrix spikes and matrix spike duplicates will be clearly identified. The main types of QA/QC samples that will be utilized for this study are as follows:

Duplicate Analyses - These analyses will be performed for both grab samples and composite samples and will require an additional set of sample containers to be sub-sampled. The results will allow evaluation of sampling error introduced by both field sampling and laboratory analyses by showing the reproducibility or precision of the sample collection and analyses. Duplicate samples will be sent "blind" to the laboratories. One duplicate sample will be collected from one of each consultant's sampling locations during each storm event sampled and analyzed for the full list of analytes.

Duplicate samples will be identified by adding 500 to the sequential storm event number. For example, a duplicate sample for the site identified above will be:

074206-IN-32898-501

Blanks - These are for field as well as laboratory samples. Blanks help verify that the equipment and the sample containers are not contaminated, and the sampling techniques used are non-contaminating. Reusable sample bottles, Teflon® tubing, and filters will be rinsed with reagent grade analyte free deionized water separately. The collected rinsates will be analyzed for the full list of analytes for the composited samples. Blanks will also be run on the analytical equipment. Rinsate blanks will be run on two samplers used by each consultant at one of their BMPs prior to the installation of the equipment. Each time a batch of composite bottles is cleaned, five percent of those bottles will be blanked. Each time a batch of filters is purchased five percent of those filters will be blanked.

Equipment rinsate blanks will be identified by adding 600 to the sequential storm event number. For example, an equipment rinsate blank collected from the monitoring equipment from the site identified above will be:

074206-IN-32898-601

Field blanks will be identified by adding 700 to the sequential storm event number. For example, a field blank collected at the site identified above will be:

074206-IN-32898-701

Matrix Spike and Matrix Duplicate Spike (MS/MSD) - The laboratory will require additional sample volumes for analyses that require matrix spikes and matrix spike duplicates to evaluate precision and accuracy of the laboratory analytical method, and to

evaluate any matrix interference. MS/MSDs are analyzed for their analyte(s) and then spiked with a known amount of analyte(s). One MS/MSD sample will be run on metal and TRPH samples from one of each consultant's sampling locations during each storm event sampled.

MS/MSD samples will be indicated on chain-of-custody forms by clearly identifying that the sample is for MS/MSD purposes.

Laboratory Replicate/Split - This QA/QC analysis will require additional sample volumes. It is a duplicate analysis performed on the same sample and evaluates the repeatability (precision) of the analytical laboratories' results. One split sample will be run from one of each consultant's BMP sampling locations during each storm event sampled and analyzed for the full list of analytes.

Laboratory replicate/split samples will be indicated on chain-of-custody forms by clearly identifying that the sample is for laboratory replicate/split sample purposes.

5.6 Laboratory Selection, Sample Container Preparation, and Analytical Methods

5.6.1 Laboratory Selection

The selected laboratories have extensive experience with environmental samples and have the ability to provide rapid response to meet critical holding time requirements for analytes requiring expeditious analysis. Laboratories are certified by the California Department of Health Services for the requested analyses. Refer to Tab 2 in the *FGN* for specific laboratory listings.

5.6.2 Holding Times, Sample Bottles, and Preparation

The laboratories will be responsible for providing appropriate sample containers and, when necessary, with preservatives for each analysis. Table 5.1 provides a summary of sample volumes required for each analysis, along with the types of containers, holding times, and preservative. Because additional volumes are necessary for laboratory QA/QC, sample containers will provide at least twice the volume necessary to perform the requested analysis. The volume of the stormwater composite from each site is often the critical factor in determining the volume of sample that can be provided to the laboratory. The Project Task Order Manager and/or Storm Control personnel, in conjunction with the laboratories, will determine the allocation of sample volume for different analyses if sample volumes are not adequate to provide additional volume for each analysis. Table 5.1 lists the analyses along with a priority ranking. Also listed on Table 5.1 are the analytical methods and Reporting limits.

Coliform bacteria samples have critical holding time requirements. The analysis should be started within 6 hours and not exceed 24 hours. This will require close coordination

between the laboratory and the sampling team to assure that this analysis is completed within holding time. With composite samples, the start of holding times is considered to be the time that the last aliquot was sampled.

5.6.3 Project Reporting Limits

Recommended analytical methods and reporting limits for this project are listed in Table 5.1. The reporting limits in this table are target reporting limits. In some cases, reporting limits may need to be adjusted due to limited sample volumes or potential matrix interference. In such cases, appropriate data qualifiers will be applied to the associated data.

5.6.4 5.6.4 Laboratory Data Package Deliverables

Laboratories will be required to provide a three-week turnaround on all deliverables. The deliverable package will include a hard copy and electronic data files. The hard copy will include standard narratives identifying any analytical or QA/QC problems and corrective actions. The electronic data files will contain all information found in the hard copy reports submitted by the laboratories. Individual data sets will be submitted as either Microsoft Excel workbook files or as Reporting Protocol and Database (CTSW-TM-98-005). Each consultant will be responsible for laboratory coordination and data management.

5.7 Sediment Sampling and Testing for Disposal Purposes

As part of the maintenance program, sediment will be removed from the BMP when flows are hydraulically impeded. It is anticipated that sediment will accumulate relatively slowly over time. However, should sediment deposit in a rapid manner, an intermediate step of stockpiling may become necessary before offsite disposal. Section 5.7.1 provides procedures to be used when assessing potential sediment contamination in the event that intermediate onsite storage is necessary.

Table 5.1
Stormwater Matrix
Analytical Parameters, Methodologies, Detection Limits, Holding Times, Container Volumes and Types, and Preservation

Analyte	Priority Rank	Reporting Limit	Units	Analytical Technique	Method Number	Holding Time	Minimum Sample Volume	Preferred Volume and Container Type[1]	Preservation
Conventionals									
pH	1	0.1	Unit	Electrode	EPA 150.1	Immediately[2]	100 mL	1-100 mL glass/plastic	4°C
Specific Conductance	1	1.0	µmhos/cm	Electrometric	EPA 120.1	Immediately[2]	500 mL	1-500 mL glass/plastic	4°C
Hardness	5	2	mg/L	Titrimetric/ Colorimetric	EPA 130.2	6 months	100 mL	1-200 mL glass/plastic	HNO_3 to pH<2, 4°C
Total Suspended Solids	1	1	mg/L	Dried Filter Weight	EPA 160.2	7 days[3]	1 L	1-500 mL glass/plastic	4°C
Nutrients									
Nitrate-Nitrogen	2	0.01	mg/L	Colorimetric Ion Chromatography	EPA 353.3 EPA 300.0	28 days 48 hours	200 mL 200 mL	1-500 mL plastic 1-500 mL plastic	4°C and H_2SO_4 to pH<2 4°C
Total Kjeldahl Nitrogen	3	0.1	mg/L	Titrimetric/ Colorimetric	EPA 351.3	28 days	500 mL	1-1L plastic	4°C and H_2SO_4 to pH<2
Total Phosphorus	4	0.002	mg/L	Colorimetric	EPA 365.3	28 days	100 mL	1-250 mL plastic	4°C and H_2SO_4 to pH<2
Total/Dissolved Metals[4],[5]									
Copper	1	1	µg/L	ICP-MS	EPA 200.8	6 months	2 @ 500 mL	2-1L plastic	4°C and HNO_3 to pH<2 and filter
Lead	1	1	µg/L	ICP-MS	EPA 200.8	6 months	2 @ 500 mL	2-1L plastic	4°C and HNO_3 to pH<2 and filter
Zinc	1	1	µg/L	ICP-MS	EPA 200.8	6 months	2 @ 500 mL	2-1L plastic	4°C and HNO_3 to pH<2 and filter
Organics[6]									
Total Petroleum Hydrocarbons – Diesel/Oil	Grab	250/200	µg/L	GC	EPA 8015M	14 days	1 L	2-1L amber glass	4°C
Total Petroleum Hydrocarbons - Gasoline	Grab	50	µg/L	GC	EPA 8015M	14 days	2-40 mL	3-40 mL VOA vials	4°C, HCl to pH<2
Bacteria[6]									
Fecal Coliform	Grab	2	MPN/100 mL	Multiple-tube	SM 9221E	6 hours[7]	50 mL	1-100 mL plastic	4°C

1. Analytes with the same preservative can be combined into a single container if the same laboratory is performing the analyses.
2. pH and Specific Conductance will be measured by the laboratory immediately upon receipt of the samples.
3. 7 days based upon limit for measuring TSS/no regulatory limit.
4. Total and dissolved metals samples are collected in separate containers. Only the total metals container will receive nitric acid.
5. Dissolved metals will be filtered in the laboratory prior to acidification.
6. Total Petroleum Hydrocarbon and Fecal Coliform grab samples will be collected for two storms per year.
7. Attempts will be made to maintain the 6-hour holding time for backteria samples to the extent possible. If not possible, a maximum holding time of 24 hours will be followed in accordance with "Standard Methods for the Examination of Water and

This subsection describes the sample collection procedures and analyses for assessing the quality of surface sediment removed from an MCTT for disposal. Evidence of oil and grease, antifreeze, solvents, fuel, hydrogen sulfide, and any other noxious substance will be noted. Observations will be used to determine if more than the standard list of analytes is required. Observations will be documented on a checklist form (Form G, Tab 5**,** *FGN*). The standard list (Table 5.2) is based on highway contaminants that have the potential to exceed hazardous waste criteria. After laboratory analysis, results will be compared to regulatory limits listed in California Code of Regulations (CCR) Title 22, Section 66261.24 and Department of Toxic Substances Control (DTSC) variances. Based on this evaluation, proper disposal methods will be chosen.

5.7.1 Sediment Collection

Procedures in EPA Publication *Test Methods for Evaluating Solid Waste, Physical/ Chemical Methods (SW-846)* provide a method for determining the mean concentration of a given contaminant within a soil mass and the appropriate number of samples necessary to calculate this mean to the specified confidence interval. Initial sampling will generate a minimum number of samples/analyses as described below. Additional sample analyses may be required to meet the confidence levels given in *SW-846*, therefore archiving of samples will be necessary. Archived samples will be appropriately preserved and analyzed within the maximum holding time specified in Table 5.2. None of the samples will be allowed to be composited. The Quality Assurance/Quality Control (Appendix III) describes the QA/QC objectives for surface sediment samples. The minimum number of discrete samples initially required is given below:

- Drums: A minimum of one sample will be collected from each drum.
- Stockpiles less than 10 cubic yards: A minimum of two samples will be collected, one from each half of the stockpile. Sampling points will be selected randomly within each half.
- Stockpiles from 10-20 cubic yards: A minimum of three samples will be collected, one from each third of the stockpile. Sampling points will be selected randomly within each third.
- Stockpiles from 20-100 cubic yards: A minimum of four samples will be collected, one from each quarter of the stockpile. Sampling points will be selected randomly within each quarter.
- Stockpiles from 100-500 cubic yards: A minimum of one sample for each 25 cubic yard portion will be collected. The stockpile will be sectioned into 25 cubic yard portions to obtain a minimum of one sample for each 25 cubic yard portion. Sampling points will be selected randomly within each 25 cubic yard portion of the stockpile.

Random samples will be selected from locations on a three-dimensional grid. If the presence of materials such as boulders, debris, etc. hinder this process, the sample will be collected as close as possible to the randomly selected point without altering the essence of the random selection process. The following steps will be used to collect surface sediment samples:

1. Don personal protective equipment.
2. Locate the sample point in the stockpile or drum.
3. Collect the sample using a soil probe or equivalent. Ensure that the sample is collected at the correct depth and location that was randomly selected.
4. Fill one 8-ounce glass jar with a portion of the sample and close the container with the cap, using care not to aerate (volatilize) the sample. This jar will be labeled and analyzed for TRPH and VOCs.
5. Homogenize the other portion of the sample in a disposable bowl using a disposable spatula or spoon. Fill a second 8-ounce glass jar with this portion of the sample and close the container with the cap. This sample will be labeled and analyzed for metals.
6. Wipe the outside of each sample container with a clean paper towel.
7. Record the sampler's initials, date, and time on the pre-labeled sample bottle.
8. Place the sample containers in individual zip-top plastic bags and seal the bags.
9. Immediately pack the samples into a chilled cooler.
10. Record the required information on the Chain-of-Custody Form.
11. Document the sampling event, recording information in the designated field logbook.
12. Repeat the above steps until the minimum number of samples has been collected.

5.7.2 Sediment Analyses

Unless observations indicate additional testing, all surface sediment samples submitted to the laboratory will be analyzed for analytes listed in Table 5.2 using Title 22 criteria (State of California, 1985). This table also lists the required reporting limits, analytical holding times, required preservation, and container sizes and types. Laboratory turn around times and data deliverables will be the same as those for the stormwater samples.

5.8 Empirical Observations

5.8.1 Purpose of Empirical Observations

Performance assessments of BMP facilities cannot be fully ascertained through analytical methods. "Empirical" observations are also critical in determining the overall performance of implemented water quality management practices and in ensuring that the practices are maintained at optimum levels. Other factors such as maintenance activities, environmental variability, and physical processes, which cannot be determined analytically, can greatly influence the performance of a particular BMP. Some of these factors such as rainfall quantity, rainfall intensity, and retention times can, and, will be assessed through physical measurements. Other components such as trash build-up, sediment deposition, and runoff appearance can best be assessed through careful documented observations.

Table 5.2
Sediment Matrix (Disposal)
Analytical Parameters, Methodologies, Reporting Limits, Holding Times, Container Volumes and Types, and Preservation

Parameter	Method	Units	Reporting Limit	Maximum Holding Time	Preservation	Container Size/Type(1)
Total Recoverable Petroleum Hydrocarbons (TRPH)	EPA 418.1	mg/kg	10	28 days	4^oC	8 oz glass jar
Volatile Organic Compounds	EPA 8260B	mg/kg	SW – 846 (5) requirements	14 days	4^oC	8 oz glass jar
California Code of Regulations (CCR), Title 22 Metals(2):	EPA 6020/7471	mg/kg	SW – 846 (5) requirements	180 days 28 days for mercury	4^oC	8 oz glass jar
California Code of Regulations (CCR), Title 22 Waste Extraction Test (WET) Metals(3):	STLC Extraction	mg/L	SW – 846 (5) requirements	180 days 28 days for mercury	4° C	NA
Toxicity Characteristic Leaching Procedure (TCLP) Metals(4):	TCLP 1311	mg/L	SW – 846 (5) requirements	180 days 28 days for mercury	4° C	NA

(1) Each sample will be collected in two 8 oz glass jars

(2) California Code of Regulation (CCR), Title 22 Metals (Sb, As, Ba, Be, Cd, Cr (total), Co, Cu, Hg, Pb, Mo, Ni, Se, Ag, Tl, V, and Zn). Initial waste characterization results may lead to a shorter list of metals for subsequent sediment disposal.

(3) Any sample for total metals that are below the Total Threshold Limit Concentration [TTLC] but exceed the ten times Soluble Threshold Limit Concentration (STLC) will be further analyzed using the WET procedure. WET extracts will be analyzed only for metals which exceed the ten times STLC criteria. Sediments associated with total metal results that exceed TTLC values are automatically considered hazardous and therefore do not need to undergo the WET procedure.

(4) If any of the WET-soluble concentrations are equal to or greater than the TCLP regulatory thresholds, analyze the waste by TCLP.

(5) "Test Methods for Evaluating Solid Waste, Physical /Chemical Methods". SW-846, Update III.(SW-846)

5.8.2 Guidelines

All observations will be succinct but also complete. For an MCTT performance evaluation, the following observations will be taken at the influent location, and effluent location:

- Meteorological characteristics (present and preceding period).
- Hydrologic and hydraulic characteristics (flowing and/or standing water).
- Inlet conditions (problems affecting performance).
- Water quality appearance (visual, olfactory) to make a rough assesment of changes in water quality.
- Solids deposition (trash and debris, sediments, organics) and resuspension.
- Treatment medium condition.
- Outlet conditions (problems affecting performance).
- Mosquitoes and other vectors.
- Structural condition of facility.
- Monitoring equipment condition.

5.8.3 Checklist for Sampling and Monitoring Personnel

Refer to Form H, Tab 6, of the *FGN* for a checklist (log form) that will be completely filled out by sampling and monitoring personnel during each storm event visit to the facility.

6.0 REFERENCES

Robert Bein, W. Frost and Associates. 1997. Scoping Study, Retrofit Pilot Program, Caltrans District 7. Calif. Dept. Trans., Sacramento, CA.

City of Austin. 1988. Environmental Criteria Manual. Drainage Utility Department, Austin, Texas.

Eaton, A.D., L.S. Clesceri, and A.E. Greenberg, eds. 1995. Standard Methods for the Examination of Water and Wastewater, 18th Edition. American Public Health Association, American Water Works Association, and the Water Environment Federation.

Pitt, R., B. Robertson, P. Barron, A. Ayyoubi, and S. Clark. 1997. Volume 1: The Multi-Chambered Treatment Train (MCTT). Department of Civil and Environmental Engineering, University of Alabama at Birmingham, Birmingham, Alabama.

State of California 1985. California Code of Regulations, Title 22, Article 11. Criteria for the identification of hazardous and extremely hazardous wastes. Register 85, No. 3.1-12-85, Para. 66693-66796, pp. 1800.75-1800.86.

Watershed Management Institute. 1997. Operation, Maintenance, and Management of Stormwater Management Systems. Watershed Management Institute, Ingleside, MD.

Young, G.K., et al. 1996. Evaluation and Management of Runoff Water Quality. Publication No. FHWA-PD-96-032. U.S. Department of transportation, Federal Highway Administration, Office of Environmental Planning.

CALTRANS
BMP RETROFIT PILOT PROGRAM

DISTRICT 7, LOS ANGELES

BMP OPERATION, MAINTENANCE, AND MONITORING PLAN

VOLUME II

APPENDIX I-H
CONTINUOUS DEFLECTIVE SEPARATION UNITS

September 1999

TABLE OF CONTENTS

Section **Page H-**

1.0 INTRODUCTION 1
1.1. Retrofit BMP Description 1
1.2. Evaluating BMP Performance 3
1.3. Deployment Criteria 3
1.4. Data Collection and Compilation 4
1.4.1. Data Requirements 4
1.4.2. Data Management 5
1.4.3. Data Analysis 5
1.5. Encroachment Permit and Restrictions 6

2.0 OPERATION AND MAINTENANCE 7
2.1. Operation and Maintenance Needs 7
2.2. Inspection Frequency 7
2.3. Aesthetic and Functional Maintenance 7
2.3.1. Aesthetic Maintenance 8
2.3.2. Functional Maintenance 8
2.4. Maintenance Frequency 10
2.5. Equipment, Resources, and Tools Needed 10
2.6. Debris and Sediment Disposal 11
2.7. Hazardous Waste 12
2.8. Checklists for Inspectors and Operation and Maintenance Personnel 12

3.0 VECTOR CONTROL AND MANAGEMENT 13

4.0 VEGETATION MANAGEMENT 14

5.0 SAMPLING AND MONITORING 15
5.1. Equipment Installation 15
5.1.1. Water Quality Samplers 15
5.1.2. Flow Monitoring 17
5.1.3. Rain Gauge 17
5.1.4. Power 17
5.1.5. Telecommunications 17
5.1.6. Equipment Enclosures 18
5.2. Maintenance and Calibration 18
5.3. Preparation and Logistics 18
5.3.1. Weather Tracking 18

TABLE OF CONTENTS (continued)

Section **Page H-**

5.3.2. Mobilization and Staffing 19
5.3.3. Monitoring Station Preparation 20
5.4. Storm Monitoring 23
5.4.1. Storm Procedure 23
5.4.2. Sample Bottle Replacement 24
5.4.3. Storm Monitoring Office 24
5.4.4. Post-Sampling Procedures 24
5.4.5. Evaluation 25
5.4.6. Grab Sampling 25
5.5. Sample Tracking and Handling 27
5.6. Laboratory Selection, Sample Container Preparation, and Analytical Methods 30
5.6.1. Laboratory Selection 30
5.6.2. Holding Times, Sample Bottles, and Preparation 30
5.6.3. Project Reporting limits 31
5.6.4. Laboratory Data Package Deliverables 33
5.7. Sediment Sampling 33
5.7.1. Sediment Collection 33
5.7.2. Sediment Analyses 35
5.8. Empirical Observations 36
5.8.1. Purpose of Empirical Observations 36
5.8.2. Guidelines 36
5.8.3. Checklists for Sampling and Monitoring Personnel 36
5.9. Characterization of Collected Material 36

6.0 REFERENCES 42

7.0 MANUFACTURERS LITERATURE 43

TABLE OF CONTENTS (continued)

TABLES

2.1 Waste Disposal Services in Southern California

5.1 Stormwater Matrix Analytical Parameters, Methodologies, Reporting limits, Holding Times, Container Volumes and Types, and Preservation

5.2 Sediment Matrix (Disposal) Analytical Parameters, Methodologies, Reporting limits, Holding Times, Container Volumes and Types, and Preservation

FIGURES

1.1 Cross-section of a Continuous Deflective Separation Unit

1.0 INTRODUCTION

The Caltrans Best Management Practice (BMP) Retrofit Pilot Program is a comprehensive water quality monitoring study to evaluate the removal of contaminants in stormwater runoff from Caltrans roads and facilities through a series of BMP pilot installations. The overall objectives of this portion of the program are to document BMP contaminant removal efficiency and technical feasibility.

This Appendix of the Operations, Maintenance, and Monitoring Plan (OMM) applies to Continuous Deflective Separation Units (CDSs). Refer to the consultant's monitoring equipment manuals and stormwater monitoring Standard Operating Procedures (SOPs) for details related to equipment installation, equipment maintenance, and storm monitoring. Maintenance, safety, documentation, and storm monitoring tasks will be carried out according to the procedures detailed in this plan. Additional measures may be necessary due to unforeseen or temporary changes to the work environment at these sites.

1.1 Retrofit BMP Description

The CDS technology was initially developed in Australia as a gross pollutant trap and is a proprietary product manufactured under patents by CDS Technologies, Inc. The technology captures and retains floatables, trash, and debris greater than 0.05 inch in stormwater runoff, as well as capture of fine sand and larger particles and the pollutants attached to those particles. The CDS unit is a non-mechanical self-operating system and functions when there is flow in the storm drainage system (see Figure 1.1). The CDS units used in this study are constructed of fiberglass with a stainless steel separation screen. The CDS unit uses fluid flow and the perforated screen in a balanced system to cause a natural separation of solids from the fluid. During storm events, the continuous circulating flow over the separation screen, with a low velocity, keeps the screen from blocking. The CDS unit's non-blocking, indirect screening technique is designed to capture pollutants in flows up to the design capacity (1.1 cubic feet per second) and during extreme rainfall events when the design capacity may be exceeded. Material captured in the CDS unit's separation chamber and sump (0.7 yd^3 sump capacity) is retained even when the unit's design capacity is exceeded. CDS units used for this study are also equipped with a sump basket so that collected material can removed from the unit without use of a vactor truck.

Figure 1.1 Cross-section of a Continuous Deflective Separation Unit

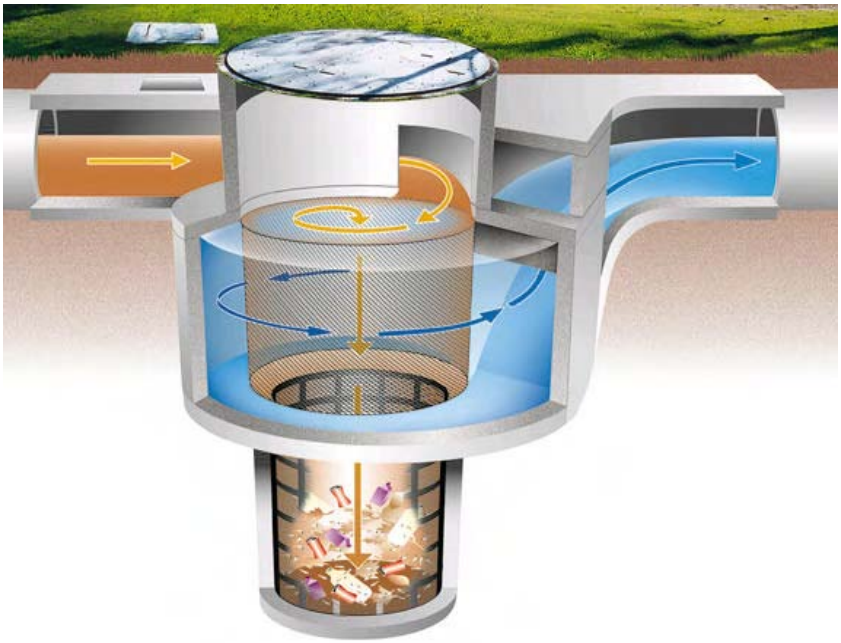

1.2 Evaluating BMP Performance

To effectively evaluate the performance of a CDS pilot facility, the following objectives will be met:

- Determine the quantity of runoff treated by the BMP.
- Determine the reduction (or change) in analyte concentrations between the influent and the effluent from the BMP.
- Determine the type, volume, and mass of material collected by the BMP.
- Determine and document the level of effort required to maintain the BMP at optimal effectiveness (i.e., treatment of stormwater runoff for storm events producing up to the 1-year, 24-hour peak flow).
- Determine and document the level of effort required to control vectors of human disease and nuisance insects, rodents, and vegetation at the BMP.
- Determine and document BMP performance evaluation criteria relative to the qualitative benefits of the BMP.

To effectively estimate the removal of contaminants from a CDS, the quantity and quality of runoff entering the CDS will be compared to the quantity and quality of water

discharged from the CDS. These data will allow a direct estimate of the total reduction in mass loadings for a variety of contaminants.

The effectiveness of a CDS is also related to the implementation of maintenance procedures and the documentation of empirical observations. Items such as screen blockage may directly affect the performance of a CDS as a stormwater treatment facility.

1.3 Deployment Criteria

Stormwater samples will be collected from the CDS for up to eight storm events over two wet seasons, weather permitting. Storms targeted for sampling will be separated by a minimum of 48 hours (72 hours preferably). The facility will be inspected per the guidelines given in Section 4.0 of the *Field Guidance Notebook* (*FGN*) which include a mandatory inspection after every storm with rainfall greater than 0.50 inches.

Based on the rainfall requirements needed to generate monitorable flows in and out of the pilots, Caltrans has developed a refined monitoring team deployment criteria. The refined deployment criteria defines when to chase storms based on season, storm forecasts, and the current count of successfully monitored storms.

The deployment season, in which monitoring teams remain "on-call" and fully staffed, will be restricted to the portion of the year when rainfall is most probable and better predictable. Summer showers are not seen as predictable events, and dry watersheds and BMPs will retain more water, which results in less effluent.

The deployment season will start on October 1. The season shall end after 3 weeks of dry weather where less than 0.2" of rainfall occurs in the San Diego or LA areas, but end no sooner than April 1 and not later than May 30th. This approach will provide a plan that adjusts to wet or dry springs.

The following criteria will decrease false starts, while allowing teams to continue to chase storms based on promising storm forecasts. The criteria will be used for all pilots, regardless of drainage area size or land use.

“Forecast-Unlikely” set to less than 0.25” rain and less than 50% probability, (Decision = "No Go")

“Forecast-Marginal” set to 0.25” or greater and 50 –75% probability, (Caltrans Decision)

“Forecast-Highly Probable” set to 0.25” or greater and greater than 75% probability. (Decision = "Go")

Forecast information will be gathered as indicated in the OM&M manuals (e.g., internet sources). As always, if conditions happen to allow paired samples to be successfully taken for any storm larger than 0.1", that sampling would be considered as a successful event, which would count towards fulfilling Scoping Study requirements.

When a specific pilot is successfully monitored for the total required storms per the applicable Scoping Study, the decision to further deploy to monitor that pilot will fall to Caltrans and no commitment to monitor beyond the terms of the Scoping Studies can be made at this time.

1.4 Data Collection and Compilation

1.4.1 Data Requirements

The following data will be collected to assess the performance and maintenance aspects of a CDS:

- Water quality and quantity data of runoff into and discharge from the CDS from flow-composite and first-flush (as soon as possible after the start of runoff) grab samples for at least eight storm events during two wet seasons, weather permitting.
- Rainfall data, recorded as a function of time, from rainfall events during the study period.
- Analysis of type, mass, and volume of material collected and bypassed.
- Observations of water quality, weather, antecedent conditions, spills, etc.
- Documentation records of inspections and maintenance activities performed.
- Vector monitoring data.
- Records of vector control measures taken.

1.4.2 Data Management

Consultants will be responsible for data management. Overall management of the data will be consistent with established Caltrans procedures for stormwater monitoring projects and this manual.

The consultant's Sample Control Section will be responsible for tracking the analytical process to assure that laboratories are meeting the required turnaround times and are providing a complete deliverable package. Sample Control will also be responsible for accumulating copies of site visit logs, inspection logs, facility maintenance records, vector control sampling data, and logged rainfall and hydrographic data. Sample Control will receive the original hard and electronic copies from the laboratory, system managers, and field crews, and verify completeness and log dates of receipt. A copy of the data sets and log sheets will be filed in Sample Control's central filing system and another copy will be provided to the consultant's Database Manager. The originals will then be

transferred to the Task Order Manager and filed with other project documentation to maintain complete project records.

Laboratories, system managers, and vector control crews will provide data in both hard copy and electronic formats. The forms of electronic submittals will be provided to the laboratories to ensure that the files can be imported into the project database with a minimum of editing. A relational database will be used for data. Laboratory data will be maintained and managed using Microsoft Excel® and Microsoft Access®. Files from the influent and effluent monitoring stations will be stored in the same database system and be linked to the laboratory database. The sampling system files will include rainfall, sampling, and flow data. Site characteristics will be stored in a separate file and linked to both the chemical and sampling system files to enable useful data queries.

Data will be submitted to Caltrans in accordance with "Caltrans Statewide Data Management Plan—Data Reported Protocol and Database," a technical memorandum dated 23 April 1998 from Larry Walker Associates to all Task Order Managers.

1.4.3 Data Analysis

Differences in storm characteristics, which can lead to differences in analyte loadings of monitored storm events, will be evaluated for each year of monitoring. Specific storm parameters such as total rainfall, average intensity, peak intensity, and antecedent conditions will also be measured.

First year sampling results for the influent and effluent sites will be characterized by descriptive statistics and statistical comparisons between the influent and effluent will also be performed. Event mean concentrations (EMCs) will be measured for each water quality parameter at both locations. Annual statistics based upon assumed log-normal distributions also will be calculated for each water quality parameter. Subsequent to characterization of the stormwater runoff into and from a CDS, statistical comparisons will be performed to determine differences between the quality of the influent and the quality of the effluent.

Differences in mean concentrations of analytes between storm events and locations will be considered to be statistically significant at $P \leq 0.10$. Although the acceptable level of alpha error is typically set at $P \leq 0.05$, this decision level was increased due to the relatively high coefficients of variation (CV) encountered with stormwater data.

Widely varying storm event characteristics will be considered when evaluating BMP efficiencies based on stormwater runoff data.

Empirical observations, maintenance activities, and vector control activities will be compiled and compared to water quality and quantity data. These data will be used to determine the total unit of effort and will be weighed against the water quality benefits.

1.5 Encroachment Permit and Restrictions

Visitation to a CDS requires a Caltrans Encroachment Permit. Copies of the CDS permits are located in Tab 9 of the *FGN*. These permits list access and safety requirements along with any restrictions. The respective Caltrans District Encroachment Permit Office will be contacted for further information and direction. Phone numbers can be found under Tab 2 in the *FGN* portion of the Volume II OMM Plan.

2.0 OPERATION AND MAINTENANCE

2.1 Operation and Maintenance Needs

The operational and maintenance needs of a CDS are:

- Inspection of its structural integrity and its screen for damage.
- Animal and vector control.
- Periodic sediment removal to optimize performance.
- Scheduled trash, debris, and sediment removal to prevent obstruction of a CDS and monitoring equipment.
- Removal of graffiti.
- Preventive maintenance on sampling, flow measurement, and associated BMP equipment and structures.
- Erosion and structural maintenance to maintain the performance of the CDS.

2.2 Inspection Frequency

The facility will be inspected and inspection visits will be completely documented (refer to Forms C and D in Tab 4):

- Once a month at a minimum.
- After every large storm (after every storm monitored or those storms with more than 0.50 inch of precipitation.)
- On a weekly basis during extended periods of wet weather.

2.3 Aesthetic and Functional Maintenance

Aesthetic maintenance is important for public acceptance of stormwater facilities. Functional maintenance is important for performance and safety reasons.

Both forms of maintenance will be combined into an overall Stormwater Management System Maintenance Program. Maintenance activities will be carried out by the consultant. Maintenance items are included in the checklist/logs found in Tab 5 of the *FGN*. Maintenance activities will conform to practices specified in this manual.

2.3.1 Aesthetic Maintenance

The following activities will be included in the aesthetic maintenance program:

- **Graffiti Removal.** Graffiti will be removed in a timely manner to improve the appearance of a CDS and to discourage additional graffiti or other acts of vandalism.

2.3.2 Functional Maintenance

Functional maintenance has two components:

1. Preventive maintenance
2. Corrective maintenance

Preventive Maintenance

Preventive maintenance that will be done on a regular basis is detailed in the checklists in Tab 5 of the *FGN*. Preventive maintenance activities to be instituted at a CDS are:

- **Trash and Debris Removal**. Trash and debris accumulation, as part of the operation and maintenance program at a CDS, will be monitored once a month during the dry and wet season, and after every large storm (0.50 inch). This information will be recorded on Form C in Tab 4 of the FGN. Trash and debris will be removed from the CDS annually (at the end of the wet season) or when material is at 85% of CDS' sump capacity, or when the floating debris is 10 inches deep, whichever occurs first.
- **Sediment Removal**. Sediment accumulation, as part of the operation and maintenance program at a CDS, will be monitored once a month during the dry and wet season, and after every large storm (0.50 inch). This information will be recorded on Form C in Tab 4 of the FGN. Sediment will be removed from the CDS annually (at the end of the wet season) or when material is at 85% of CDS' sump capacity, or when the floating debris is 10 inches deep, whichever occurs first. If accumulation of debris or sediment is determined to be the cause of decline in design performance, prompt action (i.e., within ten working days) will be taken to restore the CDS to design performance standards. Characterization and appropriate disposal of sediments is discussed in Section 2.6 and will comply with applicable local, county, state, or federal requirements.
- **Water Level.** For the CDS to function, water level in the CDS needs to be topped off to its inlet level annually (at the beginning of the wet season between September 15 and October 1). Standing water will not be removed even if it promotes mosquito breeding. Appropriate vector management will be conducted if necessary (refer to Section 3.0).
- **Mechanical and Electronic Components.** Regularly scheduled maintenance will be performed on fences, gates, locks, and sampling and monitoring equipment in accordance with the manufacturers' recommendations. Electronic and mechanical

components will be operated during each maintenance inspection to assure continued performance.

- **Elimination of Mosquito Breeding Habitats.** Although the most effective mosquito control program is one that eliminates potential breeding habitats (i.e., removal of standing water), other vector management strategies may be necessary to control mosquitoes. Mosquito control measures are discussed more in Appendix IV of Volume II.

Corrective Maintenance

Corrective maintenance is required on an emergency or non-routine basis to correct problems and to restore the intended operation and safe function of a CDS. Corrective maintenance activities include:

- **Removal of Debris and Sediment.** Sediment, debris, and trash, which impede the hydraulic functioning of a CDS will be removed, characterized in accordance with Section 5.9, and properly disposed (refer to Section 2.6). Temporary arrangements will be made for handling the sediments until a permanent arrangement is made.
- **Structural Repairs.** Once deemed necessary, repairs to structural components of a CDS and its inlet and outlet structures will be done within 30 days). Qualified individuals (i.e., the manufacturer representatives) will conduct repairs where structural damage has occurred.
- **Elimination of Mosquito Breeding Areas.** Consult Appendix IV for controlling mosquitoes.
- **Erosion Repair.** Where factors have created erosive conditions (i.e., pedestrian traffic, concentrated flow, etc.), corrective steps will be taken to prevent loss of soil and any subsequent danger to the performance of a CDS. There are a number of corrective actions than can be taken. These include erosion control blankets, riprap, or reduced flow through the area. Designers or contractors will be consulted to address erosion problems if the solution is not evident.
- **Fence Repair.** Repair of fences will be done within 30 days to maintain the security of the site.

- **Elimination of Animal Burrows.** Animal burrows that affect the structural integrity of the CDS will be filled and steps taken to remove the animals if burrowing problems continue to occur. If the problem persists, the appropriate vector control specialist (refer to the *FGN*) will be consulted regarding removal steps. This consulting is necessary as the threat of rabies in some areas may necessitate the animals be destroyed rather than relocated. If the BMP performance is affected, abatement will begin immediately according to the directions in the Maintenance Indicator Document. Otherwise, abatement will be performed annually in September. If burrows are found between March 1 and August 30, a biologist needs to confirm that no birds are nesting in the burrow before sealing the hole. At vulnerable sites, debris and woodpiles will be removed within 10 days.
- **General Facility Maintenance.** In addition to the above elements of corrective maintenance, general corrective maintenance will address the overall facility and its associated components. If corrective maintenance is being done to one component, other components will be inspected to see if maintenance is needed.

2.4 Maintenance Frequency

The Maintenance Indicator Document, included here as Appendix V, lists the schedule of maintenance activities to be implemented at a CDS.

2.5 Equipment, Resources, and Tools Needed

The following resources, equipment, and tools are needed by inspection personnel:

- Flashlight.
- Tape measure and other measuring device (e.g., survey rod) to determine sediment accumulation depths.
- Local erosion, sediment control, or stormwater management handbooks.
- Rain and foul weather gear.
- This Appendix and *FGN*.
- Copies of necessary inspection reports and forms.
- Encroachment permit.
- Business cards or other identification.
- Camera to document field conditions.
- Maintenance logs.
- Orange vest.
- Leather gloves.
- Hard hat.
- Safety glasses.
- Safety boots.
- Pen or pencil.

Except for the items contained onsite, the maintenance contractors will supply equipment, tools, and resources required for maintenance activities at a CDS. At a minimum, these contractors will supply the following:

- Dump trucks, equipment transports, and other hauling equipment.
- Shovels, picks, rakes, wheel barrels, and other hand tools.
- Pumps.
- Mechanics tools.
- Painting Equipment (brushes, rollers, and sprayers).
- Tape measures, and sediment probes.
- Safety equipment (gloves, boots, hard hats, reflective vests, safety glasses, traffic control lighting, and confined space entry equipment).

The consultants will provide for the maintenance contractors:

- This Appendix, *FGN* and approved BMP facility plans.
- Encroachment Permit.
- Logbook containing Maintenance Logs.

No items for maintenance and inspection activities will be left onsite.

2.6 Debris and Sediment Disposal

Waste generated at a CDS is ultimately the responsibility of Caltrans. Consultants responsible for operating, maintaining, and monitoring the BMP will be responsible for removal and disposal of the waste material. Disposal of sediment, debris, and trash will comply with applicable local, county, state, and federal waste control programs. Table 2.1 shows a few possible disposal services for waste material.

Table 2.1
Waste Disposal Services in Southern California

Laidlaw / Rollins (OPC) 5765 Alba Street, Los Angeles, CA 92011 Ph: (213) 585-5063 Fax: (213) 589 5443 EPA: CAD050806850	Laidlaw Environmental Services 5295 S. Garvey Rd., Westmoreland, CA 92281 Ph: (619) 334-9400 Fax: (619) 344-9405 EPA: CAD000633164
TSM Recovery and Recycling 3422 W. Pico Blvd., Los Angeles, CA 90019 Ph: (213) 735-9443 EPA: CAD108040858	Pacific Resource Recovery 3150 E. Pico Blvd., Los Angeles, CA 90023 Ph: (800) 499-7145 Fax: (213) 780-9940 EPA: CAD008252405
Demenno Kerdoon Environmental Services 3650 E. 26th Street, Los Angeles, CA 90023 Ph: (213) 268-5056 Fax: (213) 268-9672 EPA: CAD080033681	U.S. Filter Recovery Services 5375 S. Boyle Ave., Vernon, CA 99058 Ph: (213) 277-1500 Fax: (213) 588-0094 EPA: CAD097030993

Prior to disposal, removed sediments will be inspected to determine the extent and type of chemical contamination. Evidence of oil and grease, antifreeze, solvents, fuel, hydrogen sulfide, and any other noxious substance will be noted. Observations will be used to determine if more than the standard analyte list is required. The standard analyte list (Table 5.2) is based on highway contaminants that have potential to exceed California Code of Regulations (CCR), Title 22 hazardous waste criteria. Methods used to sample sediments are discussed in Subsection 5.7. While analytical results are pending, the removed sediments will be stored in 55-gallon drums onsite in an area protected from vehicular traffic. Separate drums will be used to contain sediments suspected to be differently contaminated.

2.7 Hazardous Waste

Suspected hazardous wastes will be analyzed to determine disposal options. Hazardous wastes generated onsite will be handled and disposed of according to applicable local, state, and federal regulations. A solid or liquid waste is considered a hazardous waste if it exceeds the criteria listed in the CCR, Title 22, Article 11.

2.8 Checklists for Inspectors and Operation and Maintenance Personnel

Facility Inspection and Observational checklists or logs will be filled out during each visit to a CDS. These will be kept in a record book (field logbook) to ensure that the CDS is maintained at optimum levels throughout the monitoring period. The field logbook will also contain storm monitoring data sheets and instrument calibration logs (Tab 6 of the *FGN*). A separate logbook containing Facility Inspection Checklists and Maintenance Log Sheets will be kept. A separate logbook also will be kept for vector control and management logsheets (Appendix IV of Volume II).

Refer to Forms C, D, E, and F in the *FGN* for checklists related to the inspection and maintenance requirements of a CDS.

3.0 VECTOR CONTROL AND MANAGEMENT

Constructing retrofit pilot BMPs will modify the existing stormwater drainage systems. Because such retrofitting may create opportunities for disease carrying organisms to flourish, insects (such as mosquitoes and midges) or rodents may have to be controlled. Vector control and abatement will be performed in accordance with Appendix IV and by subcontracted Vector Control Districts.

4.0 VEGETATION MANAGEMENT

No maintenance or control of vegetation is expected at CDS sites. If, during the pilot study, the need for vegetation maintenance arises, procedures and checklists will be developed.

5.0 SAMPLING AND MONITORING

This section details the monitoring equipment to be used at a CDS, sampling protocols, analytes to be tested, and quality assurance/quality control guidelines.

5.1 Equipment Installation

Runoff will be conveyed from tributary drain inlets to the CDS. Influent flow will be sampled immediately upstream of the CDS. Effluent flow will be sampled immediately downstream of the CDS and just before the litter collection bag. Due to site constraints, influent and effluent flow rate will be measured using an H-flume and bubbler located downstream of the litter collection bag. Because of the short hydraulic residence time, influent and effluent flow rate differentials are anticipated to be negligible, thus allowing the influent automatic sampler to be triggered by the H-flume on the downstream side of the CDS. Once flow passes through the H-flume, it then will discharge onto the ground, where the natural contours will direct the runoff to its original destination.

Sampler intakes will be mounted in each conveyance upstream of the flume. Stainless steel anchors will be used to secure the intakes to the invert of the conveyances.

Flow measurement points were selected at locations that minimized flow measurement errors resulting from turbulence and surcharges. Only experienced field crews will install monitoring equipment. Bubbler and intake tubing will be routed through conduit to equipment enclosures positioned on level ground near the flume. The equipment enclosures will house the data logger/controller assemblies, samplers, cellular modem equipment, flow metering electronics, and batteries.

In addition to measuring flow rates from the CDS, flow bypass will be measured in the CDS weir box using a bubbler.

The components of each automatic sampling system used will undergo calibration and verification during installation and also during maintenance and pre-storm visits.

5.1.1 Water Quality Samplers

The water quality samplers that will be used at a CDS will be automatic and composed of a peristaltic pump, a liquid detector, and a base to hold a sample bottle and ice. Each time a pre-determined volume of liquid passes the sampling point, the data logger/controller will signal the pump to deliver a self-calibrated sample volume. The suction hose used with the sampler will be 3/8-inch pure Teflon® tubing. Therefore, the sampler will be equipped with 3/8-inch silicon peristaltic tubing and a 3/8-inch stainless steel or Teflon® intake strainer of low-flow design. Strainers will be attached to the invert of each conveyance using stainless-steel fasteners. Samples will be collected into borosilicate glass bottles. After the storm event, the laboratory will pour portions of

samples from each composite bottle into individual sample bottles, ensuring they are properly composited.

Materials used in the collection of stormwater samples will meet criteria to prevent contamination of the sample. These materials will allow for both inorganic and organic trace toxicant analyses from the same sampler and sample bottles. Only Teflon® and borosilicate glass are suitable for both trace metal and organic analyses from the same sample bottle. Bottles will be cleaned according to USEPA-approved protocols consistent with approved methodology for analysis of stormwater samples (USEPA, 1983 and subsequent revisions). Sample hoses will be replaced and decontaminated annually, prior to the wet season using the procedure described below. They will not be cleaned after each storm event. These bottles and hoses will be evaluated through a blanking process to verify that the sample bottles and sample hoses are decontaminated. Where possible, unused, disposable sampling equipment will be used to eliminate the need for decontamination.

Cleaning Procedures for Sample Bottles

Bottles will be:

1. Rinsed three times with warm tap water.
2. Scrubbed with a clean plastic brush.
3. Soaked in a 2% detergent (e.g., Contrad®) solution for at least 48-hours.
4. Rinsed three times with tap water.
5. Rinsed five times with Milli-Q or equivalent water, rotating the bottle to ensure contact with the entire inside surface.
6. Rinsed three times with hexane while rotating the bottle, and then air-dried.
7. Rinsed six times with Milli-Q water.
8. Soaked in 2N nitric acid for a minimum of 24-hours.
9. Rinsed six times with Milli-Q water.

Cleaning Procedures for Teflon® Hose and Other Sampling Equipment

Teflon® hose and other sampling equipment will be:

1. Teflon hose will be rinsed three times with a 2% Micro® solution or equivalent. Other sampling equipment will be washed with a 2% Micro® solution and a clean plastic brush.
2. Rinsed three times with warm tap water.
3. Rinsed three times with Milli-Q or equivalent water.
4. Rinsed three times with 2N nitric acid.
5. Soaked at least 24-hours in 2N nitric acid.
6. Rinsed three times with Milli-Q water.

5.1.2 Flow Monitoring

A flow-proportioned sample is a composite of individual sample aliquots that are collected for each set volume of water that passes by a sampling point. To obtain a valid composite sample, direct flow measurements will be made to control the sampling interval. At a CDS, both primary and secondary flow metering devices will be used. A primary flow measuring device is a hydraulic structure inserted into a channel that monitors changes in liquid level in or near the structure. By knowing the shape and dimensions of the hydraulic structure, flow through or over the structure is related to the liquid level by a mathematical relationship. A secondary flow metering device measures both liquid depth and/or velocity. Primary devices are preferable, unless hydraulic characteristics prohibit them.

A primary flow measuring discharge flume will be used immediately downstream of the CDS. A bubbler will be used in conjunction with the flume. The bubbler measures the hydrostatic pressure of the liquid. The bubbler tube will be connected to the flume's stainless steel bubbler tube.

5.1.3 Rain Gauge

To measure rainfall, two approaches may be used. A rain gauge having a "tipping bucket" design that incorporates a small "bucket" which holds a known amount of rainfall may be used onsite. When the bucket is filled, it tips the water out, momentarily closes a switch, and then resets itself and starts the process again. The data logger/controller counts each switch closure to accumulate rainfall totals. The rain gauges used will tip after every 0.01 inch of rain.

The second approach is to use local area rain gauges to obtain rainfall data. The location and owner of the rain gauge nearest to the CDS site can be obtained from the Los Angeles County Department of Public Works. Monthly rainfall reports issued by the 15th of each month can be obtained from the Los Angeles County Department of Public Works by contacting Mr. Joe Doughly at (626) 458-6123.

5.1.4 Power

The source of primary power for sampling systems will be 12-volt deep-cycle marine batteries or 120V. A separate battery will be used to power the autosamplers, modems, and flow meters.

5.1.5 Telecommunications

Cellular modem transceivers will be used to provide remote telecommunication access to the monitoring equipment. The ability to access a sampling station, monitor the status of

the station in real-time, modify storm criteria, download new programs, and recover data allows for more cost effective, efficient monitoring.

A high performance base station antenna with filter will be installed; the filter will be installed from the lead-in of the antenna to prevent damage to the sampling station equipment due to nearby lightning strikes.

5.1.6 Equipment Enclosures

Fiberglass enclosures will be used to house the samplers and associated electronic equipment. These enclosures will be bolted to the concrete pads and will be locked to secure the monitoring equipment.

5.2 Maintenance and Calibration

A complete maintenance program will be performed at a CDS after each large storm event during the monitoring period, or in the absence of rain, on a monthly basis. Maintenance will include checking the performance of the equipment, checking power supplies, inspecting and clearing intake structures, cleaning contaminated equipment, and performing necessary equipment calibrations. Calibrations will be conducted in accordance to specifications in the individual component manuals.

Stormwater equipment maintenance visits will be thoroughly documented. Written documentation includes the action taken at a site as well as the date performed. Accurate and thorough records of station visits will be maintained to aid in the evaluation of a CDS's performance. The log illustrated in Form I in the *FGN* will be used to document maintenance and calibrations.

5.3 Preparation and Logistics

Success of the sampling effort requires careful preparation and planning to assure that high quality samples are obtained in association with each storm event.

5.3.1 Weather Tracking

Weather tracking will be the responsibility of the Task Order Manager and Storm Control personnel. During the wet season, the weather will be continually monitored with increased frequency as incoming storm systems are predicted. Sources of weather information to be used to track incoming storms include the following: National Weather Service, Weather Watch Service, Weather Network (WeatherNet), public broadcast information available on the Weather Channel and local news stations, and radar and satellite images downloaded from the Internet (e.g., www.weather.com).

5.3.2 Mobilization and Staffing

A staffing plan, which designates personnel and equipment for each facet of storm monitoring, will be developed as soon as a potential storm event is forecast. Crews will consist of two individuals. The staffing plan will include the following information:

- Personnel needed for each position.
  - Storm Control.
  - Shift Leader.
  - Crew Chiefs.
  - Crew Assistants.
- Shift and zone (pilot facilities manned by a single crew) designations.
- Equipment mobilization.
- Communication channels.

Equipment needed for stormwater sampling includes the sampling equipment, sampling containers, safety equipment, personal rain gear, Storm Kits, and vehicles equipped with some type of mobile communication, and highway safety equipment (see lists). The necessary equipment will be loaded into the appropriate vehicles early in the storm preparation sequence.

Storm Kit Equipment List

- Keypad/display
- 9-pin cable from keypad to data logger
- Full set of keys (on floatable bobber)
- Flashlights (2)
- Maps for required areas
- Large flat screwdriver
- Small flat screwdriver
- Umbrella
- High quality alkaline D-cell batteries
- Spare sample labels
- Pencils and indelible markers
- Desiccant (for flow meter/sampler)
- Diagonal clipper
- Electrical tape
- Cable ties (assorted sizes)
- Utility knife
- Ziplock baggies (assorted sizes)
- Labeling tape
- Powder-free nitrile gloves
- Rubber bands

Storm Mobilization List

- Storm kit
- Log books
- Paper towels
- DI (de-ionized) water squirt bottles
- Tape gun with clear tape
- Spare sample labels
- Ice scoop
- Sample control paperwork
- Extra fine indelible markers
- 1-gallon bottles in protective containers
- Grab sample bottles
- Coolers and ice
- Grab pole
- DI water (3-gallon jug)
- Two-way radio or cellular phone
- Personal rain gear
- Any necessary safety gear

Communication Channels

Communication channels will be established for personnel to contact each other before and during a storm event. A telephone tree will be used to facilitate contacting field personnel and other key individuals. Phone lists with home and work numbers and other key contacts will be made available to potential crew members. Two-way radio or cellular telephone communication links to field crews are essential for efficient stormwater monitoring.

5.3.3 Monitoring Station Preparation

Prior to a storm event, the CDS monitoring stations will be made ready to sample. This preparation includes entering the calculated “Volume-to-Sample” values, setting the autosampler and the data logger to sampling mode, pre-icing the sample bottle, and performing a general equipment inspection.

Determination of Volume-to-Sample

The latest weather forecast prior to each storm event will be examined to determine the proper "Volume-to-Sample" value to enter into the system. The amount of expected rainfall, how the station performed during the previous storm, and how much water is needed for analysis at the station for each storm event would be taken into consideration.
The "Volume-to-Sample" is entered as a number with units in cubic feet (cf). To determine this number, the drainage area in acres and the runoff coefficient, which is a number that reflects the permeability of the land in the study area. The following equation will be used to determine the volume of water expected at a CDS for a given rainfall:

A x B x C x 3630 = volume in cf

Where:

A = inches of rain
B = drainage area in acres
C = runoff coefficient for land area
3630 = conversion factor: acre-inches to cubic feet

To determine how much water will pass the monitoring station between samples, divide this result by the number of samples needed to satisfy the water volume requirement for all analysis. Exhibit 9.2 in Tab 9 of the *FGN* indicates the “Volume-to-Sample” value needed to collect the correct sample amount of water for the amount of expected rainfall.

After the proper "Volume-to-Sample" value is determined, it will be entered into the system before the rainfall starts. The runoff value will generally be entered from the remote computer. The value can also be entered upon arrival at the site before the system has entered storm mode. It is important that this value is accurate as possible; if the value is too high, the system will not collect enough water to be analyzed, and if the value is too low, the system may sample too fast to be monitored effectively (i.e., the percent storm capture will drop).

Prepare Sampler

The autosampler will be reset and programmed to take 36 400-ml aliquots. Also other user-entered parameters (tubing length, head height, bottle size, composite sample, sample upon one pulse, and enabled liquid detector) will be set correctly.

During each site visit, the state of the System Status Flags (switches) and Program Signature will also be recorded. These provide important information on the current sampling mode and overall integrity of the site program.

Ice Sample Bottles

The sample bottles will be iced after the decision has been made to monitor the storm and prior to initial sample collection. If this is not possible, the bottles will be iced immediately upon the first visit.

General Inspection

A brief physical inspection of the equipment will be made to make certain that there are no obvious problems such as broken conduit or a kinked hose. If possible, the intake will be cleared of debris; at sites with confined entry access, this is only possible if the safety requirements listed in Appendix II are met.

Documentation

Upon each site visit, whether during storm mode or not, records of the visit will be accurately recorded on the field form (Form I in the *FGN*). Whenever possible, any data being recorded by the sampling system (for example, time or current stage) will be verified. Also, once during each storm event visit, the Empirical Observation Checklist will be completed (Form H in the *FGN*).

General Visitation Data

During each station visit, several display locations will be recorded. The log sheets will be used as a guide to the proper display locations to record. The following data will be recorded at both the influent and effluent stations:

- Data logger or staff gauge.
- Velocity (ft/s).
- Q (flow in cfs).
- Station ID.
- Flow meter battery voltage.
- Cellular equipment battery voltage.

Storm Visitation Data

Additional data will be recorded in the logbooks during storm monitoring. The log sheet will be used to determine the necessary information. The following data are uniform for each station:

- Volume (cf)
  This is the volume of water that passed the station during the previous execution interval (one minute).
- Storm Sum
  This indicates the accumulated runoff volume in cubic feet (cf) that has passed the station since the last sample.
- Percent Storm Capture
  This indicates the percent of the storm effectively sampled by the system, and it provides a quick evaluation of the quality of the monitoring.
- Volume-to-Sample
  This value indicates the runoff volume (in cf) that will pass the station before the system will take the next sample.
- Sample Count
  This number indicates the number of samples taken in the current bottle. It automatically re-zeroes every time a bottle is filled.
- Total Rain (inches)
  The total rainfall in inches since the start of the storm. This is accumulated each time that the rain bucket tips.
- Max Flow (day)
  This indicates the Julian day on which the maximum flow occurred.
- Max Flow (time)
  When this number is positive, it indicates that the system was sampling during peak stage. If this number is negative, sampling did not occur during the peak stage because the bottles were full.
- Max Stage (feet)
  This indicates the height of the maximum stage during the current storm.
- Max Flow (cfs)
  This indicates the maximum flow rate during the current storm.

- Storm Volume (cf)
  This indicates the total volume of water that has flowed past the station since the beginning of the storm.
- Storm Volume Sampled (cf)
  This indicates the total volume of water that flowed past the station while the system has been in storm mode.

After all data have been recorded, the system will be placed in low power mode.

5.4 Storm Monitoring

A priority objective of storm monitoring is to maximize the percent storm capture of the composite sample. This will be accomplished by changing out full sample bottles with empty ones. If all bottles do fill, the full sample bottles will be replaced and the system will be reset. To determine approximately when the bottles will fill and to ensure that the sampling process is not interrupted the Storm Sum and the "Volume-to-Sample" will be evaluated. By examining how quickly the Storm Sum value is approaching the "Volume-to-Sample" value, the approximate time until the next sample is taken can be determined, as well as the approximate time until the bottles fill. The monitoring crew will be aware of the current status of each station in each of its BMP pilot facilities to determine which station will fill all bottles first so they can be onsite to change out filled bottles. If the station has been set for the amount of rainfall that actually occurs, changing the sample bottles will not be necessary. "Volume-to-Sample" settings will take into account the volume of sample required to meet analytical needs. This study requires approximately 3 liters of sample to meet these needs.

The data logger pulses the autosampler to take a sample when the accumulated Storm Sum equals the "Volume-to-Sample." The storm sum is then reset to zero and the process is repeated. This continues until the storm ends or the bottles fill. Ideally, the "Volume-to-Sample" value will be accurate for the amount of anticipated rainfall, and the bottles will not need to be changed during the storm. If the rainfall is different than that predicted, the bottles may fill before the end of the storm. If this occurs, sampling will halt until the bottles are changed and the system is reset. While the system is reset, part of the storm is not being sampled, and the percent capture will show a decrease. It is therefore imperative that the system is reset and the sample bottles are changed immediately to maintain 100% storm capture.

5.4.1 Storm Procedure

Upon arrival at a station during a storm event the status of the sample bottles will be checked immediately. If it is not necessary to change the bottle at that time, the appropriate data on the log sheets will be recorded and the necessary physical measurements and observations will be taken. An approximate time that the bottles will fill will be determined, and, depending on how much time is available, the next station

will either be visited or the team will wait until the bottles fill. If the sample bottles are full, the system will be reset immediately, and the bottles replaced. When the bottles have been changed, the necessary station data will be filled in on the field log sheets.

5.4.2 Sample Bottle Replacement

The removal of the glass sample bottles from the sampler requires great care; the bottles are heavy when full and are very slippery when wet, as well as being expensive and fragile. Two people will be present to ensure the security of the bottles and of the sample itself. Extreme care will be taken not to kink the intake hose when handling the sampler.

The bottle numbers will be recorded in the logbook and each bottle will be labeled appropriately. When new bottles have been put in place, they will be re-iced and the sampler reset to continue sampling. Full bottles will be kept iced until composited.

5.4.3 Storm Monitoring Office

The main objective of the Storm Monitoring Office is to update field crews on the status of their stations. This will greatly reduce the amount of time a crew will spend driving during storms. The monitoring of stations from a remote computer consists of calling each station and recording certain data for evaluation. When it is determined that a sampling system is close to filling all bottles, a field crew will be called and alerted to the status of the station. Remote interrogation of the storm stations will be logged using Form K in Tab 6 of the *FGN*.

Generally, the Storm Monitoring Office is also the storm control position. This means that critical decisions regarding the status of storm monitoring are made with input from the Storm Monitoring Office.

Therefore, this position requires awareness of the latest weather forecasts to make informed decisions on the continued monitoring of the storm.

5.4.4 Post-Sampling Procedures

After a storm event has ended, the stations need to be shut down. The station will be left ready for the next storm event in case there is insufficient time for a maintenance visit between storms. The following items will be taken care of, and will be well documented in the *FGN*.

1. The storm monitoring program will be reset to prepare for another storm event.
2. The sample bottles will be replaced and the sampler reset.

3. The station will be physically inspected to determine if damage was sustained during the storm event. The flow sensor will be inspected to determine if it is blocked by debris, or the intake is clogged. (This is only possible if all confined space safety requirements are met).
4. The data will be retrieved. This will be done via modem from either the remote monitoring computer or directly in the field using a laptop computer.
5. Battery voltages will be checked; batteries that are low will be replaced.
6. An Empirical Observation Checklist (Form H in Tab 6 of the *FGN*) will be completed one time during the event.

Data Retrieval

Data will be retrieved (dumped) from the data logger after each storm event during the storm season, and approximately every month during dry weather.

Chain-of-Custody Forms

When all of the grab samples have been collected, the paperwork will be filled out to ensure a smooth transfer of samples to the analytical laboratory. Chain-of-Custody Forms will be filled out in detail describing the type of samples, the number of samples, and the times that the samples were collected. These forms will accompany the samples to the laboratory.

5.4.5 Evaluation

Upon termination of a storm monitoring event, evaluation of the influent and effluent stations' performance will be documented and reviewed before the samples collected are deemed valid. Evaluation of a monitoring station's performance is based on the answers to the following questions:

- Was the storm representative of the effectiveness range of the CDS?
- Was capture of peak flow or runoff achieved at both sampling points?
- Did the equipment perform as designed throughout the duration of the storm event?
- Did the samplers accurately collect equal and reliable storm sample aliquots?
- Did the CDS function as designed?

5.4.6 Grab Sampling

Total recoverable petroleum hydrocarbons (TRPH) and bacteria (Fecal Coliform) samples are unsuitable for collection by automatic means. TRPH is inappropriate because some material adheres to the surface of the tubing and the sample container. Automatic sampling for bacteria is inappropriate because the sampling equipment is not sterile after installation and exposure to the elements. Because these analytes are

unsuitable for collecting using an automated approach, they will be collected as a grab sample from both the influent and effluent four times each storm monitoring year.

It is imperative that collected grab samples be transferred to a designated meeting location immediately after the sampling has been completed. Chain-of-Custody Forms for the samples will be completed and transport of the samples to the analytical laboratory will be coordinated to ensure that samples are handled and analyzed within the proper holding times.

It is essential that the following sample handling protocols be followed when collecting grab samples to keep contamination to a minimum:

- Turn the vehicle engine OFF to minimize exposure of the sample to exhaust fumes.
- Keep sample containers in clean coolers until sampling is actually initiated.
- Store filled sample bottles in clean coolers at 4°C.
- Keep the bottle lid clean and free of debris while the bottle is open.

Grab samples will be collected during four storm events per monitoring season as near to the sampling point as possible. When unable to collect a sample near the intake, the sample will be collected as near the center of flow as possible or in an area of sufficient velocity to ensure good mixing. Both sampling points require a grab pole to collect the necessary grab samples. Sample bottles will be fitted snugly into the bottle holder and the bottles will be seated on the upstream side of the grab pole to reduce potential contamination. The bottle will be filled with the mouth of the bottle faced into the current, if possible. Also, the bottle will be labeled before it is filled as it is nearly impossible to write on wet bottles, and the station I.D. will be listed on the bottle to coincide with the station sampled.

Each type of grab sample may require special treatment to ensure the quality of the sample and the safety of the sampler. The preservative in the sample bottles is usually a concentrated acid, so care will be taken that the preservative does not come into contact with the skin. Powder-free nitrile gloves will be worn when handling sample containers. Both types of grab samples are discussed below.

TRPH analyses will be performed for oil, diesel and gasoline fractions and reported separately for each. Samples to be analyzed for TRPH gasoline fraction will be preserved with a concentrated acid (HCl). The sample bottles will be filled to below the neck and just above the shoulder. The bottle will not be overfilled because the preservative will be washed out. If the bottle is just slightly overfilled, a small amount of sample will be poured off after the preservative has mixed with the sample. A small amount of headspace is required in the containers to allow for expansion if the sample freezes while iced during shipping. These grab samples will be collected as soon as possible after runoff is detected.

Fecal Coliform are preserved with a small sodium thiosulfate tablet. To retain the tablet while sampling, it will be removed from the container when it is dipped into the flow. The bacteria bottle will be turned over causing the tablet to fall onto the cap of the bottle; the cap will be removed and set somewhere that will prevent it from becoming contaminated (out of the rain). The sample bottle will be filled to the shoulder, the cap tipped so the tablet falls into the sample and the cap secured to the bottle. These grab samples will be collected once the entire tributary area contributes stormwater runoff (i.e., any time after 10 minutes of continuous flow past the sampling point).

5.5 Sample Tracking and Handling

Water samples will be kept properly chilled and transferred to the analytical laboratory within holding times to achieve the highest quality data possible. To ensure proper tracking and handling of the samples, documentation will accompany the samples from the initial pickup to the final extractions and analysis. This documentation includes the Chain-of-Custody Forms (see Form M in Tab 7 of the *FGN* for an example form). These forms or equivalent will be used to track and handle samples.

Samples collected, including the composite containers, will be labeled with the following information:

- Project name.
- Date.
- Time.
- CDS name and number.
- Matrix
- Influent or effluent sampling location.
- Preservative.
- Collector's initials.
- Sample I.D. number.
- Analyte(s) to be analyzed.
- Grab or composite sample.

The analytical suite for each station depends upon the total volume of water collected for the storm event. When insufficient volumes have been collected, Storm Control will need to approve the analysis of the stormwater. A Priority Analysis Sheet will be used in conjunction with a Sample Bottle Evaluation to determine the analytical suite for each station, based on the volume of water collected at that station, the Volume-to-Sample, and the percent storm capture. When the storm has been evaluated and samples from each station accounted for, a duplicate station and a QA/QC station will be selected by Sample Control based on stormwater volumes available. Duplicate and QA/QC samples will be prepared from the combined volume of the sample collected (i.e., from each of the sample bottles) at the selected duplicate and QA/QC station.

Duplicate and QA/QC sample bottles will be labeled, recorded on the Chain-of-Custody Form, and transported to the analytical laboratory.

Grab samples will be transported to the appropriate laboratory as soon as the grab sampling is completed, whereas the sample bottles for composite samples are transferred at the end of the storm event. Samples will be properly logged on the Chain-of-Custody Form and kept chilled in coolers. There will also be a field duplicate, a field blank, and extra water collected for QA/QC samples. These QA/QC grab samples will be collected at one of each consultant's BMPs during each storm event monitored. The sampling stations will be selected by Storm Control for collecting the duplicate grab samples. The crews monitoring the stations will be fully briefed on the procedures for collecting QA/QC samples, and will be familiar with the sample identification numbering scheme for these samples because they are to be submitted to the laboratory as blind samples. These samples will be labeled, recorded on the Chain-of-Custody Form, and transported to the analytical laboratory.

Each sample collected will receive a unique alphanumeric code (sample I.D. number) for tracking. This code will be standard for all samples and contain information as to the station, date, and sequential monitoring event number. The following is an example of this code:

SITE No.-IN-32898-001

Where:

Site No. = Site number of BMP site.
IN = Influent sampling point at the site; EF = effluent sampling point.
32898 = Julian day and year
001= First storm event monitored during this program at this location

If multiple bottles are used or needed, the last data field will indicate the bottle number and the total bottles in that sampling event (i.e., 001-1/3, 001-2/3, 001-3/3 for a three-bottle collection scheme).

A set of QA/QC samples will be provided with each type of sample analyzed for each storm event. The analytical laboratory may also require additional QA/QC samples if one type of analysis is to be run in more than one batch.

Blank samples, duplicate samples, MS/MSDs, and replicate/splits need not all be from the same station. However, per storm event (or batch run), these QA/QC samples will be analyzed for the standard analytes as field samples. Most field QA/QC samples are submitted blind to the analytical laboratory, however, additional sample volumes provided to the laboratory for laboratory replicates or matrix spikes and matrix spike

duplicates will be clearly identified. The main types of QA/QC samples that will be utilized for this study are as follows:

Duplicate Analyses - These analyses will be performed for both grab samples and composite samples and will require an additional set of sample containers to be sub-sampled. The results will allow evaluation of sampling error introduced by both field sampling and laboratory analyses by showing the reproducibility of the sample collection and analyses. Duplicate samples will be sent "blind" to the laboratories. One duplicate sample will be collected from one of each consultant's sampling locations during each storm event sampled and analyzed for the full list of analytes.

Duplicate samples will be identified by adding 500 to the sequential storm event number. For example, a duplicate sample for the site identified above will be:

SITE No.-IN-32898-501

Blanks - These are for field as well as laboratory samples. Blanks help verify that the equipment and the sample containers are not contaminated, and the sampling techniques used are non-contaminating. Sample bottles, Teflon® tubing, and filters will be rinsed with reagent grade analyte free deionized water separately. The collected rinsates will be analyzed for the full list of analytes for the composited samples. Blanks will also be run on the analytical equipment. Rinsate blanks will be run on two samplers used by each consultant at one of their BMPs prior to the installation of the equipment. Each time a batch of composite bottles is cleaned, five percent of those bottles will be blanked. Each time a batch of filters is purchased five percent of those filters will be blanked.

Equipment rinsate blanks will be identified by adding 600 to the sequential storm event number. For example, an equipment rinsate blank collected from the monitoring equipment from the site identified above will be:

SITE No.-IN-32898-601

Field blanks will be identified by adding 700 to the sequential storm event number. For example, a field blank collected at the site identified above will be:

SITE No.-IN-32898-701

Matrix Spike and Matrix Duplicate Spike (MS/MSD) - The laboratory will require additional sample volumes for analyses that require matrix spikes and matrix spike duplicates to evaluate precision and accuracy of the laboratory analytical method, and to evaluate any matrix interference. MS/MSDs are analyzed for their analyte(s) and then spiked with a known amount of analyte(s). One MS/MSD sample will be run on metal and TRPH samples from one of each consultant's sampling locations during each storm event sampled.

MS/MSD samples will be indicated on Chain-of-Custody Forms by clearly identifying that the sample is for MS/MSD purposes.

Laboratory Replicate/Split - This QA/QC analysis will require additional sample volumes. It is a duplicate analysis performed on the same sample and evaluates the repeatability (precision) of the analytical laboratories' results. One split sample will be run from one of each consultant's BMP sampling locations during each storm event sampled and analyzed for the full list of analytes.

Laboratory Replicate/Split samples will be indicated on Chain-of-Custody Forms by clearly identifying that the sample is for Laboratory Replicate/Split sample purposes.

5.6 Laboratory Selection, Sample Container Preparation, and Analytical Methods

5.6.1 Laboratory Selection

The selected laboratories have extensive experience with environmental samples and have the ability to provide rapid response to meet critical holding time requirements for analytes requiring expeditious analysis. Laboratories are certified by the California Department of Health Services for the requested analyses. Refer to Tab 2 in the *FGN* for specific laboratory listings.

5.6.2 Holding Times, Sample Bottles, and Preparation

The laboratories will be responsible for providing appropriate sample containers and, when necessary, with preservatives for each analysis. Table 5.1 provides a summary of sample volumes required for each analysis, along with the types of containers, holding times, and preservative. Because additional volumes are necessary for laboratory QA/QC, sample containers will provide at least twice the volume necessary to perform the requested analysis. The volume of the stormwater composite from each site is often the critical factor in determining the volume of sample that can be provided to the laboratory. The Project Task Order Manager and/or Storm Control personnel, in conjunction with the laboratories, will determine the allocation of sample volume for different analyses if sample volumes are not adequate to provide needed volume for each analysis. Table 5.1 lists the analyses along with a Priority Ranking. Also listed on Table 5.1 are the analytical methods and reporting limits.

Coliform bacteria samples have critical holding time requirements. The analysis will be started within 6 hours. This will require close coordination between the laboratory and the sampling team to assure that this analysis is completed within holding time. With composite samples, the start of holding times is considered to be the time that the last aliquot was sampled.

Attempts will be made to maintain the 6-hour holding time for bacteria to the extent practical. However, storm field conditions or safety concerns may prove this holding time infeasible. A maximum holding time of 24 hours will be followed, in accordance with "Standard Methods for the Examination of Water and Wastewater," 18th Edition.

5.6.3 Project Reporting limits

Recommended analytical methods and reporting limits for this project are listed in Table 5.1. The reporting limits in this table are target reporting limits. In some cases, reporting limits may need to be adjusted due to limited sample volumes or potential matrix interference. In such cases, appropriate data qualifiers will be applied to the associated data.

Table 5.1

Stormwater Matrix

Analytical Parameters, Methodologies, Reporting limits, Holding Times, Container Volumes and Types, and Preservation

Analyte	Priority Rank	Reporting Limit	Units	Analytical Technique	Method Number	Holding Time	Minimum Sample Volume	Preferred Volume and Container Type[1]	Preservation
Conventionals									
PH	1	0.1	Unit	Electrode	EPA 150.1	Immediately[2]	100 mL	1-100 mL glass/plastic	4°C
Specific Conductance	1	1.0	µmhos/cm	Electrometric	EPA 120.1	Immediately[2]	500 mL	1-500 mL glass/plastic	4°C
Hardness	5	2	mg/L	Titrimetric/ Colorimetric	EPA 130.2	6 months	100 mL	1-200 mL glass/plastic	HNO_3 to pH<2, 4°C
Total Suspended Solids	1	1	mg/L	Dried Filter Weight	EPA 160.2	7 days[3]	1 L	1-500 mL glass/plastic	4°C
Nutrients									
Nitrate-Nitrogen	2	0.01	mg/L	Colorimetric Ion Chromatography	EPA 353.3 EPA 300.0	28 days 48 hours	200 mL 200 mL	1-500 mL plastic 1-500 mL plastic	4°C and H_2SO_4 to pH<2 4°C
Total Kjeldahl Nitrogen	3	0.1	mg/L	Titrimetric/ Colorimetric	EPA 351.3	28 days	500 mL	1-1L plastic	4°C and H_2SO_4 to pH<2
Total Phosphorus	4	0.002	mg/L	Colorimetric	EPA 365.3	28 days	100 mL	1-250 mL plastic	4°C and H_2SO_4 to pH<2
Total/Dissolved Metals[4],[5]									
Copper	1	1	µg/L	ICP-MS	EPA 200.8	6 months	2 @ 500 mL	2-1L plastic	4°C and HNO_3 to pH<2 and filter
Lead	1	1	µg/L	ICP-MS	EPA 200.8	6 months	2 @ 500 mL	2-1L plastic	4°C and HNO_3 to pH<2 and filter
Zinc	1	1	µg/L	ICP-MS	EPA 200.8	6 months	2 @ 500 mL	2-1L plastic	4°C and HNO_3 to pH<2 and filter
Organics[6]									
Total Petroleum Hydrocarbons – Diesel/ Oil	Grab	250/200	µg/L	GC	EPA 8015M	14 days	1 L	2-1L amber glass	4°C
Total Petroleum Hydrocarbons - Gasoline	Grab	50	µg/L	GC	EPA 8015M	14 days	2-40 mL	3-40 mL VOA vials	4°C, HCl to pH<2
Bacteria[6]									
Fecal Coliform	Grab	2	MPN/100 mL	Multiple-tube	SM 9221E	6 hours[7]	50 mL	1-100 mL plastic	4°C

1. Analytes with the same preservative can be combined into a single container if the same laboratory is performing the analyses.
2. pH and Specific Conductance will be measured by the laboratory immediately upon receipt of the samples.
3. 7 days based upon limit for measuring TSS/no regulatory limit.
4. Total and dissolved metals samples are collected in separate containers. Only the total metals container will receive nitric acid.
5. Dissolved metals will be filtered in the laboratory prior to acidification.
6. Total Petroleum Hydrocarbon and Fecal Coliform grab samples will be collected for two storms per year.
7. Attempts will be made to maintain the 6-hour holding time for bacteria samples to the extent possible. When not possible, a maximum holding time of 24 hours will be followed in accordance with "Standard Methods for the Examination of Water and Wastewater", 18th Edition.

5.6.4 Laboratory Data Package Deliverables

Laboratories will be required to provide a three-week turnaround on deliverables. The deliverable package will include a hard copy and electronic data files. The hard copy will include standard narratives identifying any analytical or QA/QC problems and corrective actions. The electronic data files will contain all information found in the hard copy reports submitted by the laboratories. Individual data sets will be submitted as either Microsoft Excel® Workbook files or as Microsoft Access® database files. Each consultant will be responsible for laboratory coordination and data management. Data management will be consistent with the "Caltrans Duty Management Plan – Data Reporting Protocol and Database," Doc. J. D. CTSW-TM-98-005.

5.7 Sediment Sampling

As part of the maintenance program, sediment will be removed from the BMP when material is at 85% of CDS' sump capacity, or when the floating debris is 10 inches deep, whichever occurs first. It is anticipated that sediment will accumulate relatively slowly over time. However, should sediment deposit in a rapid manner, an intermediate step of drumming may become necessary before offsite disposal. Section 5.7.1 provides procedures to be used when assessing potential sediment contamination in the event intermediate onsite storage is necessary.

This section describes the sample collection procedures and analyses for assessing the quality of sediment removed from a CDS for disposal. Evidence of oil and grease, antifreeze, solvents, fuel, hydrogen sulfide, and any other noxious substance will be noted. Observations will be used to determine if more than the standard list of analytes is required. Observations will be documented on a checklist form (Form G in the *FGN*). The standard list (Table 5.2) is based on highway contaminants that have the potential to exceed hazardous waste criteria. After laboratory analysis, results will be compared to regulatory limits listed in California Code of Regulations (CCR) Title 22, Section 66261.24 and Department of Toxic Substances Control (DTSC) variances. Based on this evaluation, proper disposal methods will be chosen.

5.7.1 Sediment Collection

Procedures in EPA Publication *Test Methods for Evaluating Solid Waste, Physical/Chemical Methods (SW-846)* provide a method for determining the mean concentration of a given contaminant within a soil mass and the appropriate number of samples necessary to calculate this mean to the specified confidence interval. Initial sampling will generate a minimum number of samples/analyses as described below. Additional sample analyses may be required to meet the confidence levels given in *SW-846;* therefore archiving of samples will be necessary. Archived samples will be appropriately preserved and analyzed within the maximum holding time specified in Table 5.2. None of the samples will be allowed to be composited. The Quality

Assurance/Quality Control (Appendix III) describes the QA/QC objectives for sediment samples. The minimum number of discrete samples initially required is given below. The log shown as Form G in Tab 5 of the FGN will be used to document sediment collection.

- Drums: A minimum of one sample will be collected from each drum.
- Stockpiles less than 10 cubic yards: A minimum of two samples will be collected, one from each half of the stockpile. Sampling points will be selected randomly within each half.
- Stockpiles from 10-20 cubic yards: A minimum of three samples will be collected, one from each third of the stockpile. Sampling points will be selected randomly within each third.
- Stockpiles from 20-100 cubic yards: A minimum of four samples will be collected, one from each quarter of the stockpile. Sampling points will be selected randomly within each quarter.
- Stockpiles from 100-500 cubic yards: A minimum of one sample for each 25 cubic yard portion will be collected. The stockpile will be sectioned into 25 cubic yard portions to obtain a minimum of one sample for each 25 cubic yard portion. Sampling points will be selected randomly within each 25 cubic yard portion of the stockpile.

Random samples will be selected from locations on a three-dimensional grid within the CDS. If the presence of materials such as debris, etc. hinder this process, the sample will be collected as close as possible to the randomly selected point without altering the essence of the random selection process. The following steps will be used to collect sediment samples:

1. Don personal protective equipment.
2. Locate the sample point in the stockpile or drum.
3. Collect the sample using a soil probe or equivalent. Ensure that the sample is collected at the correct depth and location that was randomly selected.
4. Fill one 8-ounce glass jar with a portion of the sample and close the container with the cap, using care not to aerate (volatilize) the sample. This jar will be labeled and analyzed for TRPH and VOCs.
5. Homogenize the other portion of the sample in a disposable bowl using a disposable spatula or spoon. Fill a second 8-ounce glass jar with this portion of the sample and close the container with the cap. This sample will be labeled and analyzed for metals.
6. Wipe the outside of each sample container with a clean paper towel.
7. Record the sampler's initials, date, and time on the pre-labeled sample bottle.
8. Place the sample containers in individual zip-top plastic bags and seal the bags.
9. Immediately pack the samples into a chilled cooler.
10. Record the required information on the Chain-of-Custody Form.
11. Document the sampling event, recording information in the designated field logbook.
12. Repeat the above steps until the minimum number of samples has been collected.

5.7.2 Sediment Analyses

Unless observations indicate additional testing, sediment samples submitted to the laboratory will be analyzed for the list of analytes in Table 5.2 using Title 22 criteria (State of California, 1985). This table also lists the required reporting limits, analytical holding times, required preservation, and container sizes and types. Laboratory turn around times and data deliverables will be same as those for the stormwater samples.

Table 5.2
Sediment Matrix (Disposal)
Analytical Parameters, Methodologies, Reporting limits, Holding Times, Container Volumes and Types, and Preservation

Parameter	Method	Units	Detection Limit	Maximum Holding Time	Preservation	Container Size/Type(1)
Total Recoverable Petroleum Hydrocarbons (TRPH)	EPA 418.1	mg/kg	10	28 days	$4^{o}C$	8 oz glass jar
Volatile Organic Compounds	EPA 8260B	mg/kg	SW – 846 (5) requirements	14 days	$4^{o}C$	8 oz glass jar
California Code of Regulations (CCR), Title 22 Metals(2):	EPA 6020/7471	mg/kg	SW – 846 (5) requirements	180 days 28 days for mercury	$4^{o}C$	8 oz glass jar
California Code of Regulations (CCR), Title 22 Waste Extraction Test (WET) Metals(3):	STLC Extraction	mg/L	SW – 846 (5) requirements	180 days 28 days for mercury	4° C	NA
Toxicity Characteristic Leaching Procedure (TCLP) Metals(4):	TCLP 1311	mg/L	SW – 846 (5) requirements	180 days 28 days for mercury	4° C	NA

(1) Each sample will be collected in two 8 oz glass jars
(2) California Code of Regulation (CCR), Title 22 Metals (Sb, As, Ba, Be, Cd, Cr (total), Co, Cu, Hg, Pb, Mo, Ni, Se, Ag, Tl, V, and Zn). Initial waste characterization results may lead to a shorter list of metals for subsequent sediment disposal.
(3) Any sample for total metals that are below the Total Threshold Limit Concentration [TTLC] but exceed the ten times Soluble Threshold Limit Concentration (STLC) will be further analyzed using the WET procedure. WET extracts will be analyzed only for metals which exceed the ten times STLC criteria. Sediments associated with total metal results that exceed TTLC values are automatically considered hazardous and therefore do not need to undergo the WET procedure.
(4) If any of the WET-soluble concentrations are equal to or greater than the TCLP regulatory thresholds, analyze the waste by TCLP.
(5) "Test Methods for Evaluating Solid Waste, Physical /Chemical Methods". SW-846, Update III.(SW-846)

5.8 Empirical Observations

5.8.1 Purpose of Empirical Observations

Performance assessments of BMP facilities cannot be fully ascertained through analytical methods. "Empirical" observations are also critical in determining the overall performance of implemented water quality management practices and in ensuring that the practices are maintained at optimum levels. Other factors such as maintenance activities, environmental variability, and physical processes, which cannot be determined analytically, can greatly influence the performance of a particular BMP. Some of these factors such as rainfall quantity and rainfall intensity can, and, will be assessed through physical measurements. Other components such as trash build-up, sediment deposition, and runoff appearance are best assessed through careful documented observations.

5.8.2 Guidelines

Observations will be succinct but complete. For a CDS performance evaluation, the following observations will be taken at the influent location, within the CDS, and at the effluent location:

- Meteorological characteristics (present and preceding period).
- Hydrologic and hydraulic characteristics (flowing and/or standing water, bypass).
- Inlet conditions (problems affecting performance).
- Water quality appearance (visual, olfactory) to make a rough assessment of changes in water quality.
- Solids deposition (trash and debris, sediments, organics) and resuspension.
- Erosion.
- Outlet conditions (problems affecting performance).
- Mosquitoes and other vectors.
- Structural condition of facility.
- Monitoring equipment condition.

5.8.3 Checklist for Sampling and Monitoring Personnel

Form H in Tab 6 of the *FGN* provides a checklist (log form) that will be completed by sampling and monitoring personnel during every visit to the facility or, at a minimum, once per month.

5.9 Characterization of Collected Material

Removal of pollutants from stormwater is dependent on a variety of design factors including the entrapment of litter and debris within the CDS. Therefore, characterization of material collected within the CDS units will be made when maintenance is required

[i.e., annually (at the end of the wet season), or when material is at 85% of CDS' sump capacity, or when the thickness of floatables reaches 10 inches, whichever occurs first]. Up to four characterizations per CDS site will be done during each wet season. In addition, to determine the amount of material bypassing the CDS, a litter bypass bag will be installed immediately downstream of the CDS. Material collected in the bypass bag will be characterized during four target storm events each wet seasons and annually (at the end of the wet season). CDS units are designed to capture and retain floatables, trash, and debris greater than 0.05 inch in storm water runoff, as well as capture of fine sand and larger particles and the pollutants attached to those particles. Under normal circumstances, CDS units would be cleaned with either a vactor truck or a basket system. In this instance a basket will be used due to the desire to effectively analyze the material captured.

The basket is made from carbon steel shapes and welded wire fabric. The basket contains an inner basket fabricated from nylon that is specially designed with 50 micron openings. The inner basket is fastened into the lifting basket with a steel ring batten that is bolted through the nylon fabric so it is pinched to hold it in place. A steel ring that serves to weight the nylon basket into the bottom of the lifting basket is provided. The ring can fall from the basket when the contents are dumped. If the nylon inner liner gets damaged, it can be replaced. Contact CDS Technologies to get a replacement.

During inspections, measurement of the sediment accumulation in the sump and floating trash and debris in the separation chamber will gauge whether maintenance is required. This will be done using a tape measure and documenting the sediment depth on a field log sheet.

Floatables will be removed and the sump cleaned when the sump is 85% full. If floatables accumulate more rapidly than the settleable solids, the floatables will be removed using dip net (a pool skimming net works well for this) when the layer is 20% of the screen diameter deep (in the case of the FSW20_ 20, the layer can be 10" thick). At minimum, cleanout of the CDS unit will be done annually at the end of a rainfall season

Prior to removing the basket as described below, the floatables and suspended solids will be removed throughout the water column that is above the basket. Floatables will be deposited in a in a mesh bag, the volume will be estimated, and then the mesh bag containing the material will hung on the security fence to drip-dry for three days. After the material has drip-dried for the three-day period, it will be transported to the laboratory for characterization. Floatable material will not be mixed with other material collected in the CDS sump.

In order to remove the basket, each CDS unit will be equipped for use of a davit that can be used to hoist the basket from the sump. The davit will be portable so it can be removed from the site after the cleaning operation. The davit will be capable of hoisting

500 pounds and will be able to lift the basket to the height that the bottom of the basket will clear the top of the CDS unit. Each basket is equipped with a lifting harness to which the davit is attached for the lifting operation. The davit pulley will be at least five feet above the top of the CDS, with the cable coming over the pulley capable of being centered over the basket so a direct vertical lift can be executed.

After centering the lifting cable over the CDS unit, the lifting hook from the davit cable needs to be hooked to the basket harness assembly and the basket raised from the unit. When the basket clears the water surface in the unit, lifting will be stopped to allow the water to drain from the basket for 15 minutes. After the water has drained from the basket during the 15-minute period, the volume of material will be estimated.

The basket, if it is full, will contain up to about 5-6 cubic feet of material and may weigh up to 350-400 pounds, depending on the amount of sediments captured along with the organics and settable trash. Material will be taken out of the basket by hand and placed in mesh bags, and then the mesh bag containing the material will hung on the security fence to drip-dry for three days. After the material has drip-dried for the three-day period, it will be transported to the laboratory for characterization. Material removed from the sump will not be mixed with the floatable material. After the material is emptied, the basket will be reconnected to the davit, swung out over the CDS unit, centered and lowered back into the sump.

Material removed from the CDS will be collected in mesh bags and transported to Woodward-Clyde's Litter Management Laboratory for characterization. To determine the amount of material bypassing the CDS, a litter bypass bag will be installed immediately downstream of the CDS. The litter bypass bag will be made of mesh material with ¼-inch openings. The volume of material collected in the bypass bag will estimated onsite and will be sent to Woodward-Clyde's Litter Management Laboratory for characterization. Care will be taken not to mix bypassed material with collected material.

Characterization of material collected by the CDS (floatable and settleable) and the bypass bag will be performed in accordance with protocols established for the Litter Management Study. In general, quantity, volume, and wet and dry mass analyses will be performed.

Characterization of material will be conducted using the protocol described below:

A. Preparation

1. Put on Tyvek suit, apron, gloves and safety glasses.

2. Weigh the material settleable material removed from the CDS sump on calibrated scale. Record weight on data sheet.

3. At the work table, pour out contents in a tub and separate out litter material from leaves/organic debris. See note "b" below regarding possible contaminated or hazardous materials that you may encounter.

4. Weigh leaves/organic debris on calibrated scale and record on data sheet.

5. Place remaining litter in the # drying screen corresponding to the # CDS site. Litter should be placed on drying screen to achieve maximum drying (e.g., spread out as much as possible, avoid covering/overlapping of materials).

6. Allow materials to air dry on drying screens for 24 hours. Record on data sheet the time that air-drying begins.

7. Photograph litter on drying screen. Be sure to include event and CDS identification information in the photograph.

8. Place leaves/organic debris in the # drying screen corresponding to the # CDS site after litter has been characterized (see steps below). Leaves/organic debris should be placed on drying screen to achieve maximum drying (e.g., spread out as much as possible, avoid covering/overlapping of materials).

9. Allow leaves/organic debris to air dry on drying screens for 24 hours. Record on data sheet the time that air-drying begins.

10. Photograph leaves/organic debris on drying screen. Be sure to include event and CDS identification information in the photograph.

11. Characterize litter following Procedure B described below.

12. Repeat Steps 2 through 11 for the floatable material and material collected in the litter bypass bag.

13. Record on data sheet how much time (in days) has passed between the previous storm for which litter collection took place and the storm for which you are now conducting litter analysis.

B. Litter Characterization

1. Put on Tyvek suit, gloves and safety glasses.

2. Take material off drying screen and segregate litter into the following categories:

    - Cardboard/Chipboard
    - Cigarette Butts

- Cloth
- Glass
- Metal (foil and molded)
- Other
- Paper
- Plastic-Film
- Plastic-Moldable
- Styrofoam
- Wood Debris

3. If any materials appear to be accident or spill-related (e.g., 5 or more pieces of related materials, broken glass, pellets, etc,) consult the litter team's Accident Specialist for a determination if the materials are actually accident or spill-related.

   If Accident Specialist determines the materials to be accident or spill related, Accident Specialist must fill in data on Accident/Spill form.

4. Further segregate the litter according to usage (e.g., smoking-related, food-related or general unknown) as specified on the data sheet.

5. Weigh segregated materials on calibrated scale and record weight on data sheet ***(See note "b" below).***

6. Measure volume of segregated materials using appropriate volume measurement container, and record volume on data sheet.

7. Count individual segregated items and record number on data sheet.

At the end of characterization process, send completed data sheets to LawCrandall in San Diego.

C. Litter Disposal Procedures

Recyclable materials should be placed in recycle bin.

Non-recyclable materials should be placed in trash bin.

E. Clean-Up Procedures

Drying screens should be cleaned with water after each use. This should be accomplished at the geotechnical lab's large sink using a spray bottle.

Water from the tubs should be disposed into the sink of the geotechnical lab.

Health and Safety

- Do not smell or taste the contents of any container.
- All open wounds on the hand must be protected with protective gloves.
- If you get a cut or puncture wound from any litter materials, immediately disinfect and bandage using the first aid kit, etc. Serious infections can arise unless proper treatment is received. If necessary, seek emergency assistance at the nearest hospital which is Western Medical Center located on Tustin Avenue between 4th St. and 17th St. in Tustin. Also, notify Ron Miller by pager @ 800-970-8131 or by phone @ ext. 503. If you have not had a tetanus shot within the past 10 years, you are advised to get one at the hospital immediately. For any wound, also contact Greany Medical at 1-800-455-6155 (they are associated with Western Medical Center).
- If you get any foreign objects or fluids in the eye, do not rub the eye. Flush eye with eye water rinse located in the litter lab. Liquid should be flushed for fifteen minutes and then consult a physician. If flushing fails to remove the object, apply a dry, protective dressing and consult a physician (Western Medical Center located on Tustin Ave. between 4th St. and 17th St. in Tustin). Also notify Ron Miller by pager @ 1800-970-8131 or by phone @ ext. 503.

NOTES

a. For one storm event during each wet season, characterization analysis of material from one of the two CDS units will be weighed (both pre- and post-drying) in duplicate (by one other team member to ensure accuracy of measurement) for quality assurance/control purposes. The volumes of litter from one CDS unit will also be measured in duplicate for one storm event during each wet season. LawCrandall will identify the sample selected for quality assurance/quality control purposes.

b. Any litter materials that appear to be contaminated or hazardous should be put aside. Then contact Ron Miller by pager @: 800-970-8131, or by phone @ ext. 503 for assessment. Material will likely be placed in a 55-gallon drum for disposal by a licensed hauler with Caltrans noted as the generator.

6.0 REFERENCES

Eaton, A.D., L.S. Clesceri, and A.E. Greenberg, eds. 1992. Standard Methods for the Examination of Water and Wastewater, 18th Edition. American Public Health Association, American Water Works Association, and the Water Environment Federation.

Larry Walker and Associates. 1997. Guidance Manual: Stormwater Monitoring Protocols. Prepared for California Department of Transportation, Sacramento, CA. August 15, 1997.

Robert Bein, William Frost and Associates. 1997. Scoping Study, Retrofit Pilot Program, Caltrans District 7. Calif. Dept. Trans., Sacramento, CA.

USEPA, Test Methods for Evaluating Solid Waste, Physical/Chemical Methods, SW-846, Final Update III, June 1997.

Watershed Management Institute. 1997. Operation, Maintenance, and Management of Stormwater Management Systems. Watershed Management Institute, Ingleside, MD.

State of California 1985. California Code of Federal Regulation, Title 22, Article 11. Criteria for the identification of hazardous and extremely hazardous wastes. Register 85, No. 3.1-12-85, Para. 66693-66796, pp. 1800.75-1800.86.

Stormwater Pollution Control

GDS TECHNOLOGIES

CDS Technologies, Inc. provides products and services to municipalities, public agencies and industry, based on the unique solids/liquids separation technology known as Continuous Deflective Separation (CDS). The parent company, CDS Technologies Ltd. — which is headquartered in Australia — has developed and owns this non-blocking screening technology, which is protected by US, Australian and international patent applications.

Continuous deflective separation (CDS) technology is an innovative and highly effective new solution to address wet weather stormwater pollution problems.

CDS technology offers an effective method of preventing pollutants — such as street litter, trash and debris, vegetation and coarse sediments and the attached pollutants -nutrients and heavy metals — from entering our waterways.

As with most great technological breakthroughs, simplicity prevails: The CDS system controls the water to enable a natural separation of solids from the water carrying them. The first non-blocking and non-mechanical system, CDS uses fine-screening to provide a much more efficient and cost-effective alternative to previous generations of technology. The CDS technology is an essential first component of a "treatment train" to protect and enhance the performance of other filtration systems and biological systems.

The major application for the technology is currently to clean gross pollution from stormwater before it enters natural waterways, but through continuing research, the company has extended its product range for use in removing oil and grease from stormwater flows, industrial and food processing industries and to separate floatables and remove solids from combined sewer overflows (CSO).

CDS: Non-blocking and Non-Mechanical

"An effective separator of gross pollutants without the separation screen becoming blocked."

"No conditions could be created which produced any significant blocking of the screen."

From summary of results of an independent study by Monash University, Melbourne, Australia Dr. Tony H. F. Wong, Department of Civil Engineering, February 1995

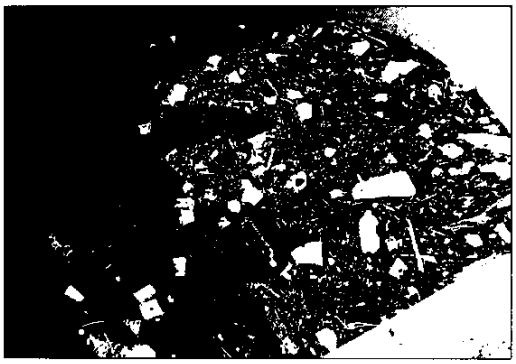

CDS technology uses indirect screening to capture even the small materials Pollutant particles remain within the unit while the water passes through the separation screen.

Safe Pollutant Removal *Removing debris caught by CDS units is low-cost, safe and easy. Captured materials can be removed simply and mechanically by basket, base flow take off (pump), clam-shell bucket, or suction — eliminating the need for human handling of dangerous materials.*

CDS Technology Key Features

Efficient
- Captures greater than 95 percent of water-borne litter and debris.
- Effective in removing particles as small as coarse sediments.
- Retains all trapped pollutants when CDS processing capacity is exceeded during infrequent high flow events

Large Flow Range
1 to 300 cubic feet per second (CFS).

Non-Blocking and Non-Mechanical
Separation screen does not clog and requires no power or supporting infrastructure.

Low-Cost, Safe and Easy Pollutant Removal
Low maintenance by mechanical rather than human methods.

Cost-Effective
Lowest overall cost per pound of gross pollutants removed.

Unobtrusive and Easy to Install
Compact and below ground. Limited space requirement. Ideal for retrofit and redevelopment applications.

Applications
- Stormwater
- Free oil and grease controls with sorbers
- CSO
- Pretreatment Water
- Industrial
- Pretreatment for O/W Sep/Sand filters media
- Biofiltration ponds and infiltration basins

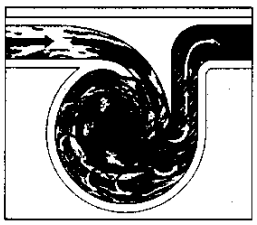

The CDS unit can be placed in line with an existing stormwater system. Its remarkably small footprint takes little space and requires no support infrastructure.

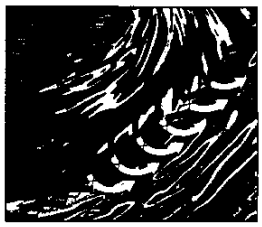

How the CDS System Works: *Pollutants are captured inside the separation chamber, while the water passes through the separation screen.*

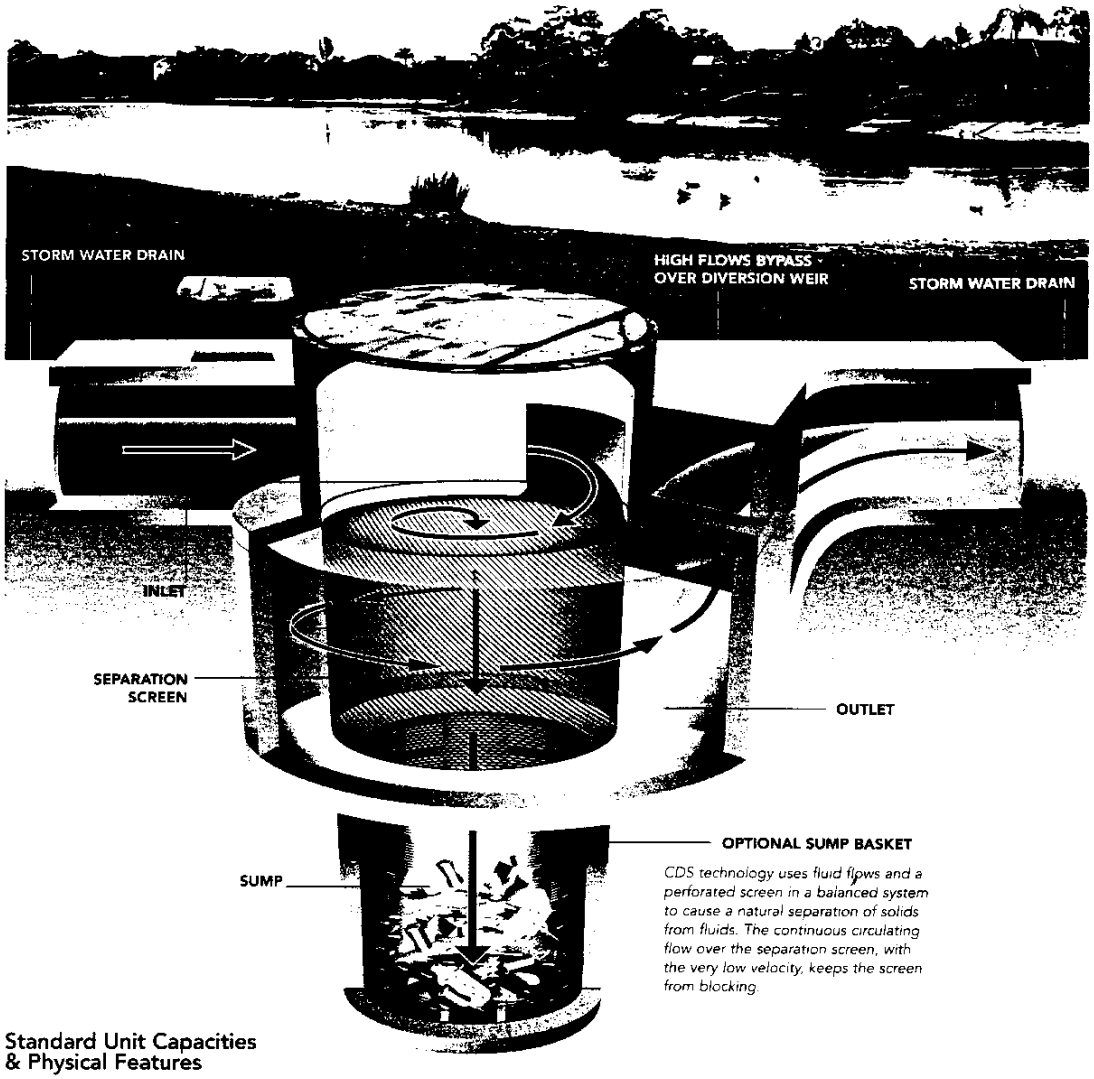

CDS technology uses fluid flows and a perforated screen in a balanced system to cause a natural separation of solids from fluids. The continuous circulating flow over the separation screen, with the very low velocity, keeps the screen from blocking.

Standard Unit Capacities & Physical Features

Manufacture Material	Model* Designation	Treatment Capacity		Design Head Loss (ft)	Sump Capacity (yd^3)	Depth Below Pipe Invert (ft)	Foot Print Diameter (ft)
		cfs	MGD				
Fiberglass	FSW20_20	1.1	0.7	0.31	0.7	4.5	4.5
	FSW30_28	3.0	2.0	0.43	1.8	5.3	6.0
Precast** Concrete	PSW30_28	3.0	2.0	0.43	1.8	7.0	6.5
	PSW50_50	11	7.3	0.78	1.9	9.6	9.5
	PSW70_70	26	17.3	1.10	3.9	14.0	12.5
	PSW100_100	62	41.3	1.55	8.6	16.0	17.5
Cast in Place Concrete	CSW150_134	148	98.7	2.11	Varies	Varies	25.5
	CSW200_164	270	180.0	2.60	Varies	Varies	34.5
	CSW240_150	300	200.0	2.60	Varies	Varies	41.0

*CDS Fiberglass (F), Precast (P), and Cast in Place (C), Stormwater (SW)
**CDS Technologies can customize units to meet specific design flows and sump capacities.

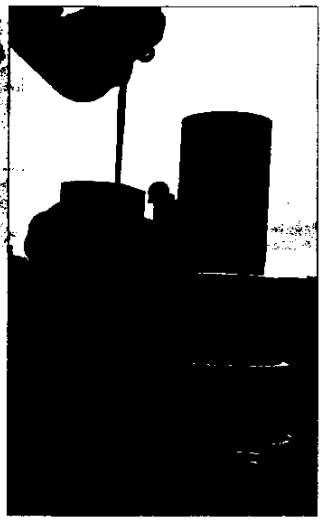

Installation of prefabricated FSW30_28 fiberglass unit

CDS unit under construction.

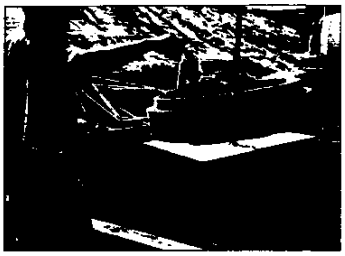

Installation of precast unit.

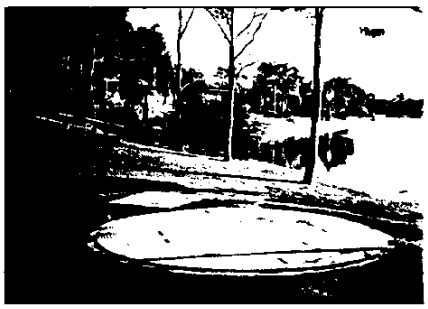

Operational CDS unit, unobtrusively situated.

CDS TECHNOLOGIES, INC.
www.cdstech-us.com
e-mail: cds@cdstech-us.com

Corporate Headquarters
70 Mansell Court, Suite 225
Roswell, GA 30076
Phone 770 641 6650
Fax 770 641 6649

Regional Office
16375 South Monterey Road, Unit C
Morgan Hill, CA 95037
Phone 408 779 6363
Fax 408 782 0721

Offices also in Sydney, Mornington and Brisbane, Australia and Hamilton, New Zealand.

CDS Installations

Australia and New Zealand

More than 140 units installed and operating nationally, including several units for the Homebush Bay 2000 Olympic site, which will include the Olympic Village, in Sydney.

United States

Currently, there are 9 stormwater and 1 CSO units installed and operating. Additional units are under construction in the states of California, Florida, Georgia, Kentucky, and Washington.

CDS Technologies Services

- Turnkey Projects
- Project site plan and conceptual layout
- Technical specifications for installation
- Consultation including pre-construction conference; advice during setting of CDS unit and during construction; and a project review before acceptance from contractor
- Three joint inspections during initial year of operation
- Quotes for precast units. Cost Estimates for cast in-place units.
- Maintenance Services

General Information and Discussion

SUBJECT: Continuous Deflective Separation (CDS) - Treatment of Stormwater Runoff

Stormwater Pollution Control

CDS Technologies is an innovative best manage practice (BMP) that is well suited to treat a large range of stormwater flows and conditions. CDS Technologies offers a solid separation unit to treat stormwater runoff as well as the runoff from vehicle parking and other areas subject to the buildup of oil, grease, sediment, trash and debris. CDS units can also treat the effluent from wash racks as a pretreatment for oil/water separators. The following overview touches briefly on this new solid separation technology and discusses the potential beneficial applications of CDS units to treat stormwater runoff.

Applications

- Stormwater treatment to remove:
  - Trash, debris, vegetation, coarse and medium sediments and some fine sediments
- Capture oil & grease using sorbents within the separation chamber
- Protect stormwater pumping facilities from the negative impacts of rock, coarse & medium sediment, grit, trash and debris
- Pretreatment:
  - Infiltration and direct filtration systems
  - Adsorption/absorption processes
  - Oil/water separators

CDS Stormwater Treatment Technology

CDS units were initially developed to separate gross solids from stormwater flows by a non-blocking, indirect screening process, which captures 100% of the floatables and removes 100% of all particles equal to or greater than the screen opening. Laboratory

CDS Technologies, Inc. • http://www.cdstech-us.com/ • cds@cdstech-us.com
16375 South Monterey Road, Unit C, Morgan Hill, CA 95037 • Phone: (408) 779-6363 • Fax (408) 782-0721
Corp Headquarters, 70 Mansell Court, Suite 225, Roswell, GA 30076, • Phone: (770) 641-6650 • Fax (770) 641-6649

evaluations have shown a 100% capture efficiency of particles ½ the screen opening size, a 93% capture efficiency of particles a third the size of the screen opening and a 50% capture efficiency of particles a fifth the size of the screen opening. The sediment used in this laboratory evaluation were various size sand particles with specific gravities of 2.65. There is no attenuation of these removal efficiencies or blocking of the screen face as the flow rate increases up to the design treatment flow of a given CDS unit. Because of CDS's capture efficiency, eliminating the trash, debris and coarse and medium from stormwater discharge is virtually assured. CDS units retain 100% of the material they have captured, even under high flow conditions when stormwaters overflow the unit's bypass weir. CDS units do not wash out during high flow or flood events! Sediments do not become re-suspended. Once pollutants are captured in the CDS unit, they are retained until properly cleaned out.

CDS units come equipped with a stainless steel expanded metal screen having a screen opening of 4700 microns (0.185 inches). A 2400 micron (0.0945-inches) or 1200 micron (0.0475 inches) is also available if finer separation is necessary. A CDS unit equipped with these smaller screens has the same and hydraulic capacities as does a CDS unit equipped with the 4700 micron screen. Laboratory evaluations using sand particles having specific gravities of approximately 2.65 showed that CDS units equipped with either the 4700 and 2400 micron screens have the same removal efficiencies in proportion to their screen openings. The following table lists the removal efficiencies for both of these screen sizes. These removal efficiencies are verified to be achieved throughout the entire treatment flow processed by a given CDS unit. There is no attenuation of these removal efficiencies or blocking of the screen face as the flow rate increases.

Continuous Deflective Separation Technology

(Indirect Screening)

Particle Removal Efficiency*

Particle Size as percentage of screen opening (%)	Screening Removal Efficiency	Standard Screen Openings			
		4700 Micron (0.185-inches)		2400 Micron (0.095-inches)	
		Microns	Inches	Microns	Inches
100	100%	4700	0.185	2400	0.095
50	100%	2350	0.093	1200	0.047
33	93%	1551	0.061	800	0.031
20	50%	940	0.037	480	0.019

Particle Specific gravity = 2.65

Coarse and Fine Sediment Removal

Professor Wells of Portland State University is presently conducting an evaluation of the capability of CDS's continuous deflective separation technology to remove fine sediments. Professor Well's work will focus on determining the CDS unit's removal efficiency of a range of fine particles normally found in stormwater. The fine particles used in this evaluation will have size distributions and specific gravities that attempt to represent fine sediments typically found in stormwater runoff. Professor Wells's work will expand upon earlier work done by Dr. Tony Wong, Monash University, Chaulfield, Victoria, Australia. Dr. Wong's evaluation verified CDS's exceptional efficiency at removing gross pollutants and coarse sediment. Dr. Wong's technical paper is enclosed. This paper is a compilation of extensive work by the University of Monash. Dr. Wong presented the paper at the 1997 Water Environment Federation 70th Annual Conference and Exposition (WEFTEC '97) in Chicago.

Based on performance of CDS units in Australia and recent laboratory evaluations by Professor Stentrom of UCLA, CDS Technologies believes that Professor Wells' evaluation and analysis will document fine sediment removal efficiencies that exceed expectations. Earlier evaluations of CDS units verified separation efficiency of gross pollutants and the non-blocking aspect of the technology. These earlier evaluations did not focus on quantifying the percentage, size and weights of coarse, medium and fine particles captured within the CDS unit.

As mentioned above, CDS also offers a 1200 micron (0.0475 inches) if finer separation is necessary. Professor Wells' evaluation of the 1200 micron and smaller size screens with apertures of 900 to 600 microns will allow CDS Technologies to quantify both the percentage and size of particles removed using these size screens as is presently verified for the 4700 and 2400 micron size screens for particles having a specific gravity of 2.65. CDS units equipped with screens having aperture sizes smaller than 1200 microns will have less hydraulic treatment capacity, but significantly greater removal efficiencies of particles in the 50 to 200 micron range.

Sizing a CDS Stormwater Treatment Unit for a Development Site

We recommend that CDS units be sized to treat a storm event having a return period of 3 to 6 months. Runoff flows from such events roughly correlate to a rainfall event lasting 1 hour with an intensity of ½-inch, typically producing one cfs of discharge in storm drains for every 2 acres. CDS believes a storm event of this intensity will mobilize and transport the mass of pollutants within a catchment into the storm drain system. This general method is used to calculate runoff treatment flows to size CDS units. A more detailed consideration of the local hydrology, topography and land uses for a given site could result in different design stormwater treatment flow than that determined from our suggested method. However, CDS's suggested method of

determining a treatment flow is generally satisfactory given the speculative nature of estimating the flows necessary to mobilize the pollutants of concern. The HYDRAULIC DESIGN section of CDS's Technical Manual also addresses this suggested method for calculating a design stormwater treatment flow for a given site development or storm drain.

Once the design treatment flow is determine, the correct size CDS unit, having the adequate flow capacity, can be selected from the list of available premanufactured fiberglass or precast concrete units or designed as a cast in place unit for larger treatment flows greater than 62 cfs. CDS Technologies provides premanufactured fiberglass and precast concrete units capable of treating stormwater flows from zero to 62 cfs. These units are easily constructed, especially the premanufactured fiberglass and precast units. Cast in place units can be readily designed and constructed to treat flows ranging from zero to 300 cfs.

Capture of Gross Pollutants

The Co-operative Research Centre for Catchment Hydrology recently concluded an 18-month, detailed study in which various stormwater pollutant trapping systems were evaluated under real service conditions, and the results compared.

This work is the first of its kind in Australia. It brings together the analytical skills and resources needed for such a wide ranging study, yet ensures the independence and objectivity of a leading research group. The results achieved by the CDS technology, in these findings, are very positive. For example, on p.63 of *From Roads to Rivers*, the CDS device is described as 99% efficient over the 12 month monitoring period.

CDS Technologies has purchased these reports in order to provide stormwater managers and water resource consultants with the information that engineering teams will need to fully plan strategies and make decisions based on performance, proven under controlled conditions, by independent experts. These reports are available for review.

The author of this study, Robin Allison, spoke at the conference for "Urban Stormwater Management in the Southwest" in Long Beach, California, September of 1998 and the 1998 Water Environment Federation 71st Annual Conference and Exposition (WEFTEC '98) in Orlando, Florida, Oct 1998. If you had the opportunity to hear Mr. Allison's presentation and discussion, I am sure you will agree that Mr. Allison's efficiency evaluation of a variety of pollution control devices was unbiased and thorough, covering planning, design, and installation/maintenance costs. In this field study, the performance of the CDS unit proved to be the most efficient and cost effective pollution control device of all the structural stormwater treatment technologies evaluated.

Oil & Grease Treatment of Stormwater Runoff

The placement of one strategically located CDS unit can cost effectively and efficiently treat the stormwater runoff from small or large vehicle parking lots or traffic laden areas, rather than treating the runoff at multiple points in the storm drainage system. Laboratory tests by Professor Stenstrom from the University of California Los Angeles that were performed in 1998 have shown that the addition of sorbent material within the separation chamber enables the CDS unit to capture more than 80% of the free oil and grease transported within the stormwater. This removal efficiency is achieved at 1/2 the unit's treatment design flow. Removing 80% of the free oil and grease should be readily achieved, given that oil and grease are generally mobilized during the first part of storm events when the unit is certainly operating at less than its design capacity. Once in contact with the sorbent media, the oil and grease cannot escape the CDS unit. Additionally, the CDS unit will always effectively remove the range of solids, trash and debris mentioned above. Professor Stenstrom is now determining the capability of the sorbent to capture polynuclear aromatic hydrocarbons (PAHs) in stormwater runoff that will add another benefit of the use of sorbents in a CDS device.

Because the oil and grease in stormwater are pollutants of concern, it should be understood how oil and grease are transported in stormwater and wash rack effluent if their effective removal is to be achieved. Oil and grease are transported in stormwater and wash rack effluent in four different ways:

1. Attached to trash and debris such as styrofoam and leaves
2. Attached to coarse and fine sediments
3. Free or floating oil and grease
4. Suspended and emulsified within the stormwater flow

The CDS unit is effective at removing oil transported by the first three methods. As stated earlier, a CDS unit is quiet effective at removing solids and the addition of sorbent material within the separation chamber enables the unit to effectively capture 80% of the free oil and grease. Researchers studying the quality of stormwater runoff have advised that 50 to 80% of the total oil and grease within stormwater are attached to sediments. They also indicate that the visual sheens on water surfaces are less than one (1) milligram per liter (mg/L) and can only be effectively removed using sorbent material or biological treatment methods such as grassy swales.

Oil/Water Separator Efficiencies

Though the initial application of CDS units was intended for use as a gross pollutant trap, the continuous deflective separation is proving to be effective in a variety of stormwater, wastewater, and industrial applications calling for the efficient separation of solids from liquids. A CDS unit makes an ideal pretreatment for oil/water separators, preventing the concentration of solids within the stormwater runoff or effluent from wash racks from overwhelming and clogging the filtering and coalescing mechanism of oil & grease and oil/water separators.

CDS Technologies is presently working with the City of Redmond, Washington for the placement of a CDS unit in front of a recently installed oil/water separator. This city installed an oil/water separator consisting of coalescing plate modules to treat the runoff generated from a 185 acre commercial/residential portion of the city subject to significant vegetation and debris loading. This oil/water project represents a capital investment of over $900,000. In its present state, the oil/water separator is not achieving its design performance due to the solids content of the stormwater runoff. The city is proposing to establish a treatment train with a CDS unit PSW50_42 having a treatment capacity of 9 cfs (4,039 gpm) in front of the oil/water separator for an additional cost of approximately $65,000, completely installed. This additional expenditure represents approximately 7% of the initial oil/water project costs and will readily bring the total system on line and functioning at capacity.

Treatment Trains

The concept of establishing treatment trains to effectively remove target constituents of concern from stormwater runoff is being aggressively applied by the Puget Sound Naval Ship Yard in Bremerton, WA. The Controlled Industrial Area of the shipyard presently services and dismantles nuclear vessels and other ships. This activity occurs in a completely paved area with the discharge leading directly to the waters of Puget Sound. Recognizing the need to remove the heavy metals from the stormwater runoff, a stormwater treatment train has been installed to ensure their removal.

In late June of 1998, a CDS unit model PSW50_42 equipped with a 1200 micron (.0475 inches) screen has been installed in front of a finer filtration and absorption system at the Puget Sound Naval Ship Yard in Bremerton. The effluent from this CDS unit will allow the following fine filtration and absorption system to effectively remove the remaining constituents of concern without diminished capacity due to clogging from sediment, trash and debris.

CDS Design and Services

CDS furnishes full engineering services as appropriate to bring a project to successful completion, including conceptual planning, hydraulic analysis and site design, contract documents suitable for competitive bid and construction inspection or management.

Operations and Maintenance

The CDS units are self-operating, there are no moving parts and the unit is gravity driven, utilizing the available hydraulic energy within the water flow. The screen and supporting hardware are stainless steel and should resist corrosion for many years. In short, operation and repair requirements of installed CDS units are minimal.

Maintenance of a given CDS unit consists of cleaning out the sump on a seasonal basis and a suggested annual inspection of the screen surface. CDS units have large storage capacities within their sumps in relation to each unit's design treatment flow. A significant benefit of the CDS system is the easy maintenance and cleanout using vactor trucks, which eliminate worker exposure to materials captured in the units.

Sump cleanout is a critical component of a successful CDS operation. CDS suggests the sump and unit be cleaned out by a vacuum truck approximately 4 times per year. The frequency of cleanouts is site dependent and is based on the land use of the catchment and the actual pollutant loading. Typically, a unit will require more frequent cleanouts at the start of the rainy season. It is the first several rainfall events that will wash a large percentage of the accumulated pollutants down the storm drain to be captured by the CDS units.

Construction

CDS units have a small construction footprint and once installed below ground, the access covers are seamless and unobtrusive. The premanufactured fiberglass units are typically installed in a prepared shallow excavation in less than 2 hours. Precast units up to the PSW70 size CDS units are stacked into a prepared excavation and backfill to the height of the intake structure (pipe invert) within a morning. The casting of connection collars and the diversion weir typically require another two days for these larger precast units. The largest precast unit and those locations requiring cast in place CDS units involve a longer construction duration and are site dependent when considering the complexity of the installation.

I hope you find the packet informative and I look forward to discussing potential applications for CDS units to treat your stormwater runoff. If you have questions, please

call me at (408) 779-6363 or email wstein@cdstech-us.com to further discuss innovative this BMP.

Respectfully,

Walter Stein, P.E.
Engineering Sales

CALTRANS
BMP RETROFIT PILOT PROGRAM

DISTRICT 7, LOS ANGELES

BMP OPERATION, MAINTENANCE, AND MONITORING PLAN

VOLUME II

APPENDIX I-I
DRAIN INLET INSERTS

September 1999

TABLE OF CONTENTS

Section **Page I-**

1.0 INTRODUCTION 1
1.1. Retrofit BMP Description 1
1.2. Evaluating BMP Performance 1
1.3. Deployment Criteria 2
1.4. Data Collection and Compilation 4
1.4.1. Data Requirements 4
1.4.2. Data Management 4
1.4.3. Data Analysis 5
1.5. Encroachment Permit and Restrictions 6

2.0 OPERATION AND MAINTENANCE 9
2.1. Operation and Maintenance Needs 9
2.2. Inspection Frequency 9
2.3. Aesthetic and Functional Maintenance 9
2.3.1. Aesthetic Maintenance 10
2.3.2. Functional Maintenance 10
2.4. Maintenance Frequency 11
2.5. Equipment, Resources, and Tools Needed 15
2.6. Debris and Sediment Disposal 17
2.7. Hazardous Waste 18
2.8. Checklists for Inspectors and Operation and Maintenance Personnel 18

3.0 VECTOR CONTROL AND MANAGEMENT 19

4.0 VEGETATION MANAGEMENT 20

5.0 SAMPLING AND MONITORING 21
5.1. Equipment Installation 21
5.1.1. Water Quality Samplers 21
5.1.2. Flow Monitoring 23
5.1.3. Rain Gauge 23
5.1.4. Power 23
5.1.5. Telecommunications 23
5.1.6. Equipment Enclosures 24
5.2. Maintenance and Calibration 24

TABLE OF CONTENTS (continued)

Section **Page I-**

5.3. Preparation and Logistics 25
5.3.1. Weather Tracking 25
5.3.2. Mobilization and Staffing 25
5.3.3. Monitoring Station Preparation 25
5.4. Storm Monitoring 28
5.4.1. Storm Procedure 29
5.4.2. Sample Bottle Replacement 29
5.4.3. Storm Monitoring Office 30
5.4.4. Post-Sampling Procedures 30
5.4.5. Evaluation 31
5.4.6. Grab Sampling 31
5.5. Sample Tracking and Handling 31
5.6. Laboratory Selection, Sample Container Preparation, and Analytical Methods 34
5.6.1. Laboratory Selection 34
5.6.2. Holding Times, Sample Bottles, and Preparation 35
5.6.3. Project Detection Limits 35
5.6.4. Laboratory Data Package Deliverables 37
5.7. Drain Inlet Insert Sampling 37
5.7.1. Drain Inlet Insert Collection 37
5.7.2. Drain Inlet Insert Analyses 38
5.8. Empirical Observations 40
5.8.1. Purpose of Empirical Observations 40
5.8.2. Guidelines 40
5.8.3. Checklists for Sampling and Monitoring Personnel 40

6.0 REFERENCES 41

7.0 MANUFACTURERS' LITERATURE 42

TABLE OF CONTENTS (continued)

TABLES

2.1 Waste Disposal Services in Southern California
5.1 Stormwater Matrix Analytical Parameters, Methodologies, Detection Limits, Holding Times, Container Volumes and Types, and Preservation
5.2 Solid Matrix (Drain Inlet Insert) Analytical Parameters, Methodologies, Detection Limits, Holding Times, Container Volumes and Types, and Preservation

FIGURES

1.1 StreamGuard™ Insert Diagram
1.2 Fossil Filter™ Diagram

1.0 INTRODUCTION

The Caltrans Best Management Practice (BMP) Retrofit Pilot Program is a comprehensive water quality monitoring study to evaluate the removal of contaminants in stormwater runoff from Caltrans roads and facilities through a series of BMP pilot installations. The overall objectives of this portion of the program are to document BMP contaminant removal efficiency and technical feasibility.

This Appendix of the Operations, Maintenance, and Monitoring Plan (OMM) applies to Drain Inlet Inserts (DIIs). Refer to the consultant's monitoring equipment manuals and stormwater monitoring Standard Operating Procedures (SOPs) for details related to equipment installation, equipment maintenance, and storm monitoring. Maintenance, safety, documentation, and storm monitoring tasks will be carried out according to the procedures detailed in this plan. Additional measures may be necessary due to unforeseen or temporary changes to the work environment at these sites.

1.1 Retrofit BMP Description

Two types of commercially available DIIs will be installed at three sites each. The first type is StreamGuard™, manufactured by Foss Environmental Services; the second type is Fossil Filter™, manufactured by KriStar Enterprises, Inc.

The StreamGuard™ Oil and Grease Catch Basin Insert (#3001) removes oil and grease and sediment from stormwater discharges. As stormwater runoff flows through the DII, the geotextile fabric absorbs oil and retains sediment (Figure 1.1). This DII also collects sediment in the conical-shaped portion of the unit. Floating oil and grease are absorbed by a StreamGuard™ polymer contained in a screen bag fixed within the unit. A newly installed StreamGuard™ DII is capable of handling flows up to 500 gallons per minute.

The Fossil Filter™ insert removes oil, grease and sediment from stormwater discharges. As stormwater runoff flows through the DII, oil and grease are adsorbed to adsorbent granules and sediment is captured in the top of a trough (Figure 1.2). The Fossil Filter™ is designed to not impede hydraulic flows.

1.2 Evaluating BMP Performance

To effectively evaluate the performance of a DII pilot facility, the following objectives will be met:

- Determine the quantity of runoff treated by the BMP.
- Determine the reduction (or change) in analyte concentrations between the influent and the effluent from the BMP and the masses of constituents retained in the insert media..

- Determine and document the level of effort required to maintain the BMP at optimal effectiveness.
- Determine and document the level of effort required to control vectors of human disease and nuisance insects, rodents, and vegetation at the BMP.
- Determine and document BMP performance evaluation criteria relative to the qualitative benefits of the BMP.

To effectively estimate the removal of contaminants from a DII, the quantity and quality of runoff entering the DII will be compared to the quantity and quality of water discharged from the DII. To determine the influent quality and quantity, a mass balance will be performed using effluent quality and quantity data and quality and quantity data of material collected by the DII. These data will allow a direct estimate of the pollutant removal efficiencies using the following steps:

1. For each of the five pollutants measured in the inlet media (total solids, total Cu, total Pb, total Zn, and TRPH), calculate percent efficiency representing the time interval since the last time the insert medium was changed, using the equation:

   Efficiency (%) = ([Estimated influent pollutant mass – Effluent pollutant mass]/Estimated influent pollutant mass) x 100

2. Estimate the influent pollutant mass for the time interval according to:

   Estimated influent pollutant mass = Insert medium pollutant mass + Total effluent pollutant mass for the time interval

3. Calculate total effluent pollutant mass in two ways, and compute efficiency with each method for comparison:

   I. Storm-by-storm method:

   A. Estimate the effluent mass for each storm event in the time interval according to:

   Estimated event effluent pollutant mass = (Effluent EMC) x (Event runoff volume)

   Where EMC = Event mean concentration

   B. For storm events that were successfully monitored, use the measured data.

   C. For any storm event during the time interval that met the deployment criteria but was not successfully monitored, estimate the EMC for that event as the mean of all EMCs measured for that case in all storm events

during the time interval. How the mean EMC is determined depends on whether the data tend more to be normally or log-normally distributed. If the concentrations tend more to be normally distributed, use the arithmetic mean of the effluent EMCs. If they tend more to be log-normally distributed, calculate the mean effluent EMC by log-transforming individual storm EMCs, averaging, and then transforming back.

D. Add the effluent pollutant masses from all storm events in the time interval.

II. Aggregated storm method:

A. Estimate the total effluent mass for all storm events in the time interval according to:

Estimated total effluent pollutant mass = (Mean EMC) x (Total runoff volume)

B. How the mean EMC is determined depends on whether the data tend more to be normally or log-normally distributed. If the concentrations tend more to be normally distributed, use the arithmetic mean of the effluent EMCs measured for that case in all storm events during the time interval. If they tend more to be log-normally distributed, calculate the mean effluent EMC by log-transforming individual storm EMCs, averaging, and then transforming back.

4. Compute mean efficiencies for each pollutant and each wet season by averaging results computed according to Steps 1-3 for all time intervals in that wet season.

The effectiveness of a DII is also related to the implementation of maintenance procedures and the documentation of empirical observations. Items such as trash and sediment build-up, and filtering capability may directly affect the performance of a DII.

1.3 Deployment Criteria

Stormwater samples will be collected from the DIIs for up to eight successfully monitored rainfall events over two wet seasons (1998-1999 and 1999-2000). Storms targeted for sampling will be separated by a minimum of 48 hours (72 hours preferably). For Fossil Filter cases only, those events successfully monitored after installation of stainless steel filters will count toward the eight events. Therefore, the minimum numbers of events in 1999-2000 are:

	Fossil Filter	StreamGuard
Foothill	5	4

Las Flores	6	3
Rosemead	5	5

In each wet season each case case [a combination of a site (Foothill, Las Flores, or Rosemead) and an insert (Stream Guard™ or Fossil Filter™)] must have median percent storm capture ≥60%, and no more than one case can have median percent storm capture <70. In each wet season the median percent storm capture for all cases must be ≥80%, and the mean percent storm capture for all cases must be ≥75%.

Based on the rainfall requirements needed to generate monitorable flows in and out of the pilots, Caltrans has developed a refined monitoring team deployment criteria. The refined deployment criteria defines when to chase storms based on season, storm forecasts, and the current count of successfully monitored storms.

The deployment season, in which monitoring teams remain "on-call" and fully staffed, will be restricted to the portion of the year when rainfall is most probable and better predictable. Summer showers are not seen as predictable events, and dry watersheds and BMPs will retain more water, which results in less effluent.

The deployment season will start on October 1. The season shall end after 3 weeks of dry weather where less than 0.2" of rainfall occurs in the San Diego or LA areas, but end no sooner than April 1 and not later than May 30th. This approach will provide a plan that adjusts to wet or dry springs.

The following criteria will decrease false starts, while allowing teams to continue to chase storms based on promising storm forecasts. The criteria will be used for all DIIs, regardless of drainage area size or land use.

“Forecast-Unlikely” set to less than 0.10” rain and less than 50% probability, (Decision = "No Go")

“Forecast-Marginal” set to 0.10” or greater and 50 –75% probability, (Caltrans Decision)

“Forecast-Highly Probable” set to 0.10” or greater and greater than 75% probability. (Decision = "Go")

Forecast information will be gathered as indicated in the OM&M manuals (e.g., internet sources). As always, if conditions happen to allow paired samples to be successfully taken for any storm larger than 0.1", that sampling would be considered as a successful event, which would count towards fulfilling Scoping Study requirements.

When a specific pilot is successfully monitored for the total required storms per the applicable Scoping Study and the *Criteria for Determination of Additional Drain Inlet Insert Monitoring Requirements and Use of 1998-1999 Monitoring Results*, the decision

to further deploy to monitor that pilot will fall to Caltrans and no commitment to monitor beyond these terms can be made at this time.

1.4 Data Collection and Compilation

1.4.1 Data Requirements

The following data will be collected to assess the performance and maintenance aspects of a DII:

- Water quality and quantity data of runoff discharged from the DII from flow-weighted composite samples for at least eight storm events during two wet seasons, weather permitting.
- Quality and quantity data of material collected by the DII.
- Rainfall data, recorded as a function of time, from rainfall events during the study period.
- Observations of water quality, weather, antecedent conditions, spills, etc.
- Documentation records of inspections and maintenance activities performed.
- Vector monitoring data.
- Records of vector control measures taken.

1.4.2 Data Management

Consultants will be responsible for data management. Overall management of the data will be consistent with established Caltrans procedures for stormwater monitoring projects and this manual.

The consultant's Sample Control Section will be responsible for tracking the analytical process to assure that laboratories are meeting the required turnaround times and are providing a complete deliverable package. Sample Control will also be responsible for accumulating copies of site visit logs, inspection logs, facility maintenance records, vector control sampling data, and logged rainfall and hydrographic data. Sample Control will receive the original hard and electronic copies from the laboratory, system managers, and field crews, and verify completeness and log dates of receipt. A copy of the data sets and log sheets will be filed in Sample Control's central filing system and another copy will be provided to the consultant's Database Manager. The originals will then be transferred to the Task Order Manager and filed with all other project documentation to maintain complete project records.

Laboratories, system managers, and vector control crews will provide data in both hard copy and electronic formats. The forms of electronic submittals will be provided to the laboratories to ensure that the files can be imported into the project database with a minimum of editing. A relational database will be used for data. Laboratory data will be maintained and managed using Microsoft Excel® and Microsoft Access®. Files from the influent and effluent monitoring stations will be stored in the same database system and be linked to the laboratory database. The sampling system files will include rainfall,

sampling, and flow data. Site characteristics will be stored in a separate file and linked to both the chemical and sampling system files to enable useful data queries.

Data will be submitted to Caltrans in accordance with "Caltrans Statewide Data Management Plan-Data Reported Protocol and Database," a technical memorandum dated 23 April 1998 from Larry Walker Associates to all Task Order Managers.

1.4.3 Data Analysis

Differences in storm characteristics, which can lead to differences in analyte loadings of monitored storm events, will be evaluated for each year of monitoring. Specific storm parameters such as total rainfall, average intensity, peak intensity, and antecedent conditions will also be measured.

First year results of effluent samples will be characterized by descriptive statistics. Statistical comparisons between the influent (calculated by performing a mass balance as described above) and effluent will also be performed. Annual statistics based upon assumed log-normal distributions also will be calculated for each water quality parameter. Subsequent to characterization of the stormwater runoff into and from a DII, statistical comparisons will be performed to determine differences between the quality of the influent and the quality of the effluent.

Differences in mean concentrations of analytes between storm events and locations will be considered to be statistically significant at P=0.10. Although the acceptable level of alpha error is typically set at P=0.05, this decision level was increased due to the relatively high coefficients of variation (CV) encountered with stormwater data.

Widely varying storm event characteristics will be considered when evaluating BMP efficiencies based on stormwater runoff data.

The monitoring events from 1998-1999 (after installation of stainless steel filters for Fossil Filter cases) will count toward the minimum eight events for each case [a combination of a site (Foothill, Las Flores, or Rosemead) and an insert (Stream Guard™ or Fossil Filter™)], and their results can be used to express treatment efficiencies, if the mean percent efficiencies for 1998-1999 are not more than 20% lower than the 1999-2000 mean percent efficiencies (computed as 0.2 x 1999-2000 % efficiency) for at least four of the five pollutants measured.

For any case failing to meet this criterion, the minimum eight storm events shall be monitored in 1999-2000; if the minimum is not reached in 1999-2000, monitoring will continue in the 2000-2001 wet season until the minimum number is reached. The 1998-1999 results will not be used to express treatment efficiencies for cases failing to meet the criterion.

Empirical observations, maintenance activities, and vector control activities will be compiled and compared to water quality and quantity data.

1.5 Encroachment Permit and Restrictions

Visitation to a DII requires a Caltrans Encroachment Permit. Copies of the DII permits are located in Tab 9 of the *(FGN).* These permits list access and safety requirements along with any restrictions. The respective Caltrans District Encroachment Permit Office will be contacted for further information and direction (phone numbers can be found under Tab 2 in the *FGN* portion of the Volume II OMM Plan).

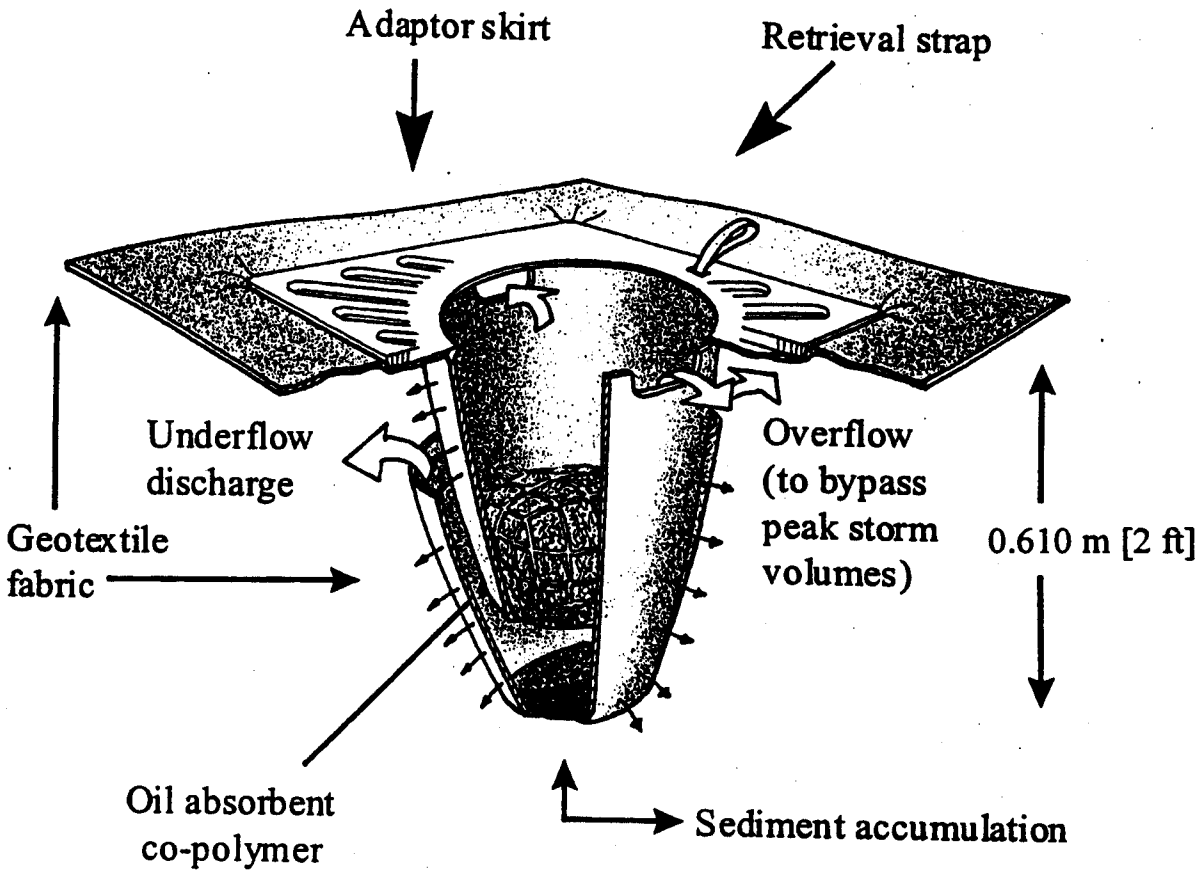

NOT TO SCALE

Prepared By: EDP
Checked By: BJB

CALTRANS DISTRICT 7 BMP PILOT PROGRAM FIGURE: 1.1	LAW Crandall LAWGIBB Group Member A Division of Law Engineering and Environmental Services, Inc.	STREAMGUARD™ INSERT DIAGRAM CONTRACT 43A0002C, TASK ORDER 6

D:\70300\80030\FIG-1.3

FOSSIL FILTER™

DIMENSION DETAIL

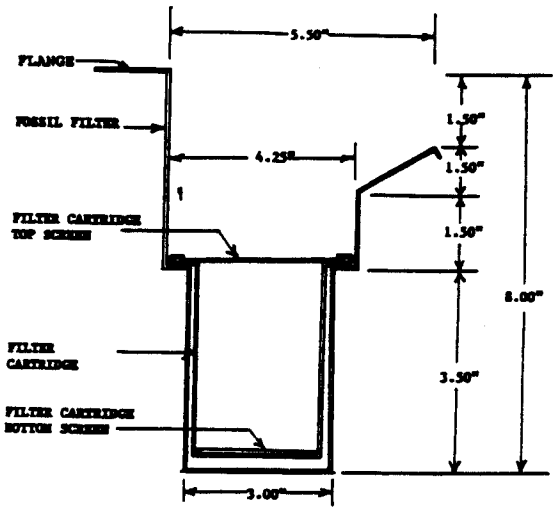

CROSS SECTION OF FOSSIL FILTER™ WITH FLANGE

FOSSIL FILTER™

AERIAL VIEW STANDARD GRATE INLET

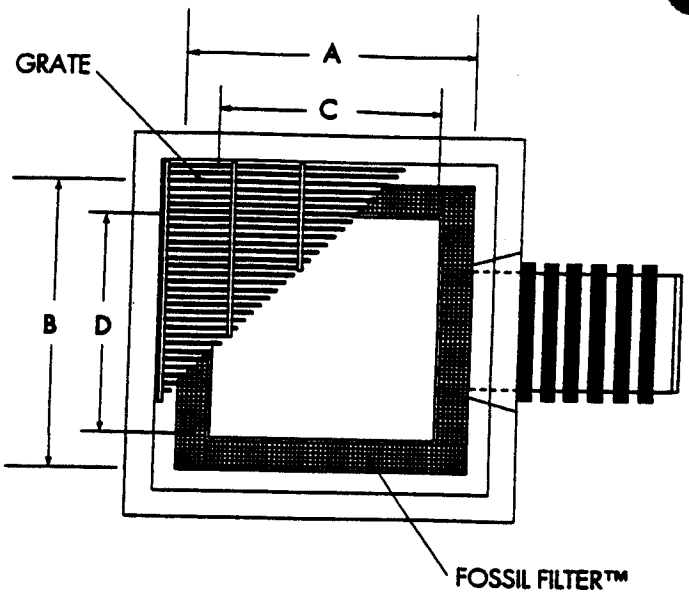

A & B: INSIDE DIMENSION OF INLET
C & D: FOSSIL FILTER OVERFLOW AREA

FOSSIL FILTER™

STANDARD GRATE INLET

FOSSIL FILTER FLANGE RESTS ON GRATE BEARING LEDGE

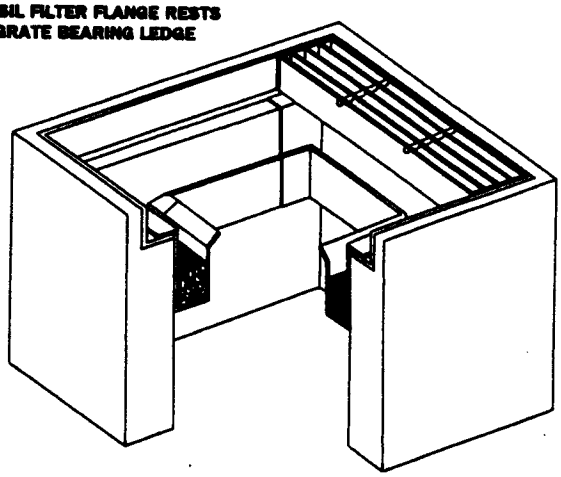

NOT TO SCALE

Prepared By: EDP
Checked By: BJB

CALTRANS DISTRICT 7 BMP PILOT PROGRAM FIGURE: 1.2	LAW Crandall LAWGIBB Group Member A Division of Law Engineering and Environmental Services, Inc.	FOSSIL FILTER™ DIAGRAM CONTRACT 43A0002C, TASK ORDER 6

D:\70300\80030\FIG-1.4

2.0 OPERATION AND MAINTENANCE

2.1 Operation and Maintenance Needs

The operational and maintenance needs of a DII are:

- Animal and vector control.
- Periodic replacement of the StreamGuard™ insert and its absorbent material to optimize performance.
- Periodic sediment removal from the Fossil Filter™ to optimize performance.
- Periodic replacement of the Fossil Filter's™ adsorbent material to optimize performance.
- Trash and debris collection and removal to prevent obstruction of DII and monitoring equipment.
- Removal of graffiti.
- Preventative maintenance on sampling, flow measurement, and associated BMP equipment and structures.

The maintenance requirements for DIIs were compiled from product information and discussions with the DII vendors and/or manufacturers (see Section 6.0).

2.2 Inspection Frequency

The facility will be inspected and inspection visits will be completely documented (refer to Forms C through F in Tabs 4 and 5 of the *FGN*):

- Once a month at a minimum.
- After each consecutive storm event producing at least 0.10 inch of rain.
- On a weekly basis during extended periods of wet weather.

2.3 Aesthetic and Functional Maintenance

Aesthetic maintenance is important for public acceptance of stormwater facilities. Functional maintenance is important for performance and safety reasons.

Both forms of maintenance will be combined into an overall Stormwater Management System Maintenance Program. Maintenance activities will be carried out by the consultant. Maintenance items are included in the checklist/logs found in Forms C through F in Tabs 4 and 5 of the *FGN*. Maintenance activities will conform to practices specified in this manual.

2.3.1 Aesthetic Maintenance

The following activities will be included in the aesthetic maintenance program:

- **Graffiti Removal.** Graffiti will be removed in a timely manner to improve the appearance of a DII and to discourage additional graffiti or other acts of vandalism.

2.3.2 Functional Maintenance

Functional maintenance has two components:

1. Preventive maintenance
2. Corrective maintenance

Preventive Maintenance

Preventive maintenance that will be done on a regular basis is detailed in the checklists in Forms C through F in Tabs 4 and 5 of the *FGN*. Preventive maintenance activities to be instituted at a DII are:

- **Trash and Debris.** During each inspection and maintenance visit to the site, debris and trash removal will be conducted to reduce the potential for the drain inlet, DII, and other components from becoming clogged and inoperable during storm events. Trash and debris removed from the DII will be documented, and stored in sediment collection bins near the DII until the DII is sent to the laboratory for analysis. Analytical data will be used in part to evaluate the overall efficiency of the DIIs.
- **Sediment Removal**. Sediments will be removed before they impede the hydraulic functioning of the DII. See Appendix V for more details. Collected sediment will be stored in sediment collection bins near the DII until the DII is sent to the laboratory for analysis. Analytical data will be used in part to evaluate the overall efficiency of the DIIs.
- **DII Fit.** During each inspection and maintenance visit to the site, the fit of the DII will be checked and any gaps found will be filled.
- **Monitoring Vault Berm.** During each inspection and maintenance visit to the site, the integrity of the rubber berm surrounding the monitoring vault will be checked and repaired if needed.
- **Mechanical and Electronic Components.** Regularly scheduled maintenance will be performed on fences, gates, locks, and sampling and monitoring equipment in accordance with the manufacturers' recommendations. Electronic and mechanical components will be operated during each maintenance inspection to assure continued performance.
- **Elimination of Mosquito Breeding Habitats**. The most effective mosquito control program is one that eliminates potential breeding habitats. Mosquito control measures are discussed more in Appendix IV of Volume II.

Corrective Maintenance

Corrective maintenance is required on an emergency or non-routine basis to correct problems and to restore the intended operation and safe function of a DII. Corrective maintenance activities include:

- **Removal of Debris and Sediment.** Sediment, debris, and trash, which impede the hydraulic functioning of a DII will be removed and stored in the sediment collection bins. Collected sediment, trash and debris will be documented and sent to the laboratory for analysis and ultimate disposal. Laboratory data will be used in part to determine overall effectiveness of a DII.
- **Structural Repairs.** Repairs to structural component of a drain inlet and DII will be made promptly (e.g., within ten working days). Qualified individuals (i.e., the designers and contractors) will be consulted immediately to develop a course of action.
- **Elimination of Mosquito Breeding Areas.** Consult Appendix IV of Volume II for controlling mosquitoes.
- **Fence Repair.** Fence repair will be done promptly (e.g., within the next ten working days).
- **General Facility Maintenance.** In addition to the above elements of corrective maintenance, general corrective maintenance will address the overall facility and its associated components. If corrective maintenance is being done to one component, other components will be inspected to see if maintenance is needed.

2.4 Maintenance Frequency

The Maintenance Indicator Document, included as Appendix V, lists the schedule of maintenance activities to be implemented at a DII.

2.5 Equipment, Resources, and Tools Needed

The following resources, equipment, and tools are needed by inspection personnel:

- Flashlight.
- A tape measure to determine sediment accumulation depths.
- Rain and foul weather gear.
- This Appendix and *FGN*
- Copies of necessary inspection reports and forms.
- Encroachment permit.
- Business cards or other identification.
- Camera to document field conditions.
- Hardhats and orange vests.
- Maintenance logs.
- Leather gloves.

- Safety glasses.
- Safety boots.
- Pen or pencil.

Except for the items contained onsite, the contractor will supply equipment, tools, and resources required for maintenance activities at a DII. At a minimum, the contractor will supply the following:

- Shovels, picks, rakes, wheel barrels, and other hand tools.
- Pumps.
- Mechanics tools.
- Concrete tools.
- Painting Equipment (brushes, rollers, and sprayers).
- Tape measures and sediment probes.
- Safety equipment (gloves, boots, hard hats, reflective vests, safety glasses, traffic control lighting, and confined space entry equipment).

To be supplied by consultant to the maintenance contractors:

- This Appendix, *FGN* and approved BMP facility plans.
- Encroachment Permit.
- Logbook containing Maintenance Logs.

No items for maintenance and inspection activities will be left onsite without approval of the maintenance station supervisor.

2.6 Debris and Sediment Disposal

Waste generally at DIIs is ultimately the responsibility of Caltrans. Consultants responsible for operating, maintaining, and monitoring the DIIs will be responsible for removal, and disposal of waste material. Disposal of sediment, debris, and trash will comply with applicable local, county, state, and federal waste control programs. Table 2.1 shows a few possible services for waste material.

Table 2.1
Waste Disposal Services in Southern California

Laidlaw / Rollins (OPC) 5765 Alba Street, Los Angeles, CA 92011 Ph: (213) 585-5063 Fax: (213) 589-5443 EPA: CAD050806850	Laidlaw Environmental Services 5295 S. Garvey Rd., Westmoreland, CA 92281 Ph: (619) 334-9400 Fax: (619) 344-9405
TSM Recovery and Recycling 3422 W. Pico Blvd, Los Angeles, CA 90019 Ph: (213) 735-9443 EPA: CAD108040858	Pacific Resource Recovery 3150 E. Pico Blvd., Los Angeles, CA 90023 Ph: (800) 499-7145 Fax: (213) 780-9940 EPA: CAD008252405
Demenno Kerdoon Environmental Services 3650 E. 26th Street, Los Angeles, CA 90023 Ph: (213) 268-5056 Fax: (213) 268-9672 EPA: CAD080033681	U.S. Filter Recovery Services 5375 S. Boyle Ave., Vernon, CA 99058 Ph: (213) 277-1500 Fax: (213) 588-0094 EPA: CAD097030993

No material will be disposed of before laboratory analysis has been performed. The data will be used in part to evaluate the overall efficiency of the DII and to determine the appropriate disposal facility.

2.7 Hazardous Waste

Suspected hazardous wastes will be analyzed to determine disposal options. Hazardous waste generated onsite will be handled and disposed of according to applicable local, state, and federal regulations. A solid or liquid waste is considered a hazardous waste if it exceeds the criteria listed in the CCR, Title 22, Article 11.

2.8 Checklists for Inspectors and Operation and Maintenance Personnel

Facility Inspection and Observational checklists or logs will be filled out during each visit to a DII. These will be kept in a record book (field logbook) to ensure that the DII is maintained at optimum levels throughout the monitoring period. The field logbook will also contain storm monitoring data sheets, and instrument calibration logs. A separate logbook containing Facility Inspection Checklists and Maintenance Log Sheets will be kept. A separate logbook also will be kept for vector control and management logsheets (Appendix IV of Volume II). Refer to Forms C, D, E, and F (in Tabs 4 and 5 of the *FGN*) for checklists related to the operational and maintenance requirements of a DII.

3.0 VECTOR CONTROL AND MANAGEMENT

Constructing retrofit pilot BMPs will modify the existing stormwater drainage systems. Because such retrofitting may create opportunities for disease carrying organisms to flourish, insects (such as mosquitoes and midges) or rodents may have to be controlled. Vector control and abatement will be performed in accordance with Appendix IV and by subcontracted Vector Control Districts.

4.0 VEGETATION MANAGEMENT

No maintenance or control of vegetation is expected at the DII sites. If, during the pilot study, the need for vegetation maintenance arises, procedures and checklists will be developed.

5.0 SAMPLING AND MONITORING

This section details the monitoring equipment to be used at a DII, sampling protocols, analytes to be tested, and quality assurance/quality control guidelines.

5.1 Equipment Installation

Runoff discharged into a storm drain inlet will pass through a DII. Because influent flow will sheet flow into the DII, the influent quantity and quality cannot be easily measured. For this reason, a mass balance will be performed using data (quality and quantity) collected of effluent flow discharged from the DII and data (quantity and quality) of material collected by the DII to determine influent concentrations of stormwater runoff. The amount of material retained by a DII plus the amount of material discharged from the DII equals the amount of material entering the DII. Effluent flow will be measured and samples will be collected at a Palmer-Bowlus flume installed downstream of the DII.

Sampler intakes will be mounted in each conveyance approximately 0.6 meters (m) upstream of the flume or 1.2 m downstream of the bubbler tube (flow measurement device). Concrete anchors will be used to secure the intakes to the invert of the conveyances. Refer to Appendix II for confined space entry procedures.

Flow measurement points were selected at locations that minimized flow measurement errors resulting from turbulence and surcharges. Only experienced field crews will install monitoring equipment. Bubbler and intake tubing will be routed through conduit to equipment enclosures positioned on level ground near each flume. The equipment enclosures will house the data logger/controller assemblies, samplers, cellular modem equipment, flow metering electronics, and batteries.

Components of each automatic sampling system used will undergo calibration and verification during installation and also during maintenance and pre-storm visits.

5.1.1 Water Quality Samplers

The water quality samplers that will be used at a DII will be automatic and composed of a peristaltic pump, a liquid detector, and a base to hold a sample bottle and ice. Each time a pre-determined volume of liquid passes the sampling point, the data logger/controller will signal the pump to deliver a self-calibrated sample volume. The suction hose used with the sampler will be 3/8-inch pure Teflon® tubing. Therefore, the sampler will be equipped with 3/8-inch silicon peristaltic tubing and a 3/8-inch or Teflon® intake strainer of low-flow design. Strainers will be attached to the invert of each conveyance using stainless-steel fasteners. Samples will be collected into four 1-gallon borosilicate glass bottles. After the storm event, the laboratory will pour portions of samples from each composite bottle into individual sample bottles, ensuring they are properly composited.

All materials used in the collection of stormwater samples will meet criteria to prevent contamination of the sample. These materials will allow for both inorganic and organic trace toxicant analyses from the same sampler and sample bottles. Only Teflon® and borosilicate glass are suitable for both trace metal and organic analyses from the same sample bottle. Bottles will be cleaned according to USEPA-approved protocols consistent with approved methodology for analysis of stormwater samples (USEPA, 1983 and subsequent revisions). Sample hoses will be replaced and decontaminated annually, prior to the wet season, using the procedure described below. They will not be cleaned after each storm event. These bottles and hoses will be evaluated through a blanking process to verify that the sample bottles and sample hoses are decontaminated. Where possible, unused, disposable sampling equipment will be used to eliminate the need for decontamination.

Cleaning Procedures for Sample Bottles

Bottles will be:

1. Rinsed three times with warm tap water.
2. Scrubbed with a clean plastic brush.
3. Soaked in a 2% detergent (e.g., Contrad®) solution for at least 48-hours.
4. Rinsed three times with tap water.
5. Rinsed five times with Milli-Q or equivalent water, rotating the bottle to ensure contact with the entire inside surface.
6. Rinsed three times with hexane while rotating the bottle, and then air-dried.
7. Rinsed six times with Milli-Q water.
8. Soaked in 2N nitric acid for a minimum of 24-hours.
9. Rinsed six times with Milli-Q water.

Cleaning Procedures for Teflon®Hose and Other Sampling Equipment

Teflon® hose and other sampling equipment will be:

1. Teflon hose will be rinsed three times with a 2% Micro® solution or equivalent. Other sampling equipment will be washed with a 2% Micro® solution and a clean plastic brush.
2. Rinsed three times with warm tap water.
3. Rinsed three times with Milli-Q or equivalent water.
4. Rinsed three times with 2N nitric acid.
5. Soaked at least 24-hours in 2N nitric acid.
6. Rinsed three times with Milli-Q water.

5.1.2 Flow Monitoring

A flow-proportioned sample is a composite of individual sample aliquots that are collected for each set volume of water that passes by a sampling point. To obtain a valid composite sample, direct flow measurements will be made to control the sampling interval. At a DII, both primary and secondary flow metering devices will be used. A primary flow measuring device is a hydraulic structure inserted into a channel that monitors changes in liquid level in or near the structure. By knowing the shape and dimensions of the hydraulic structure, flow through or over the structure is related to the liquid level by a mathematical relationship. A secondary flow metering device measures both liquid depth and/or velocity. Primary devices are preferable, unless hydraulic characteristics prohibit them.

A primary flow measuring discharge flume will be used at each sampling point. A bubbler will be used in conjunction with the flume. The bubbler measures the hydrostatic pressure of the liquid. The bubbler tube will be connected to the flume's bubbler tube.

5.1.3 Rain Gauge

The rain gauge that will be used at a DII site will be a "tipping bucket" design that incorporates a small "bucket" which holds a known amount of rainfall. When the bucket is filled, it tips the water out, momentarily closes a switch, and then resets itself and starts the process again. The data logger/controller counts each switch closure to accumulate rainfall totals. The rain gauges used at DII sites will tip after every 0.01 inch of rain.

5.1.4 Power

The source of primary power for sampling systems will be either 12-volt deep-cycle marine batteries or 120V, AC power, where available. A separate battery will be used to power the autosamplers, modems, and flow meters

5.1.5 Telecommunications

Cellular modem transceivers will be used to provide remote telecommunication access to the monitoring equipment. The ability to access a sampling station, monitor the status of the station in real-time, modify storm criteria, download new programs, and recover data allows for more cost effective, efficient monitoring.

A high performance base station antenna with filter will be installed; the filter will be installed from the lead-in of the antenna to prevent damage to the sampling station equipment due to nearby lightning strikes.

5.1.6 Equipment Enclosures

Fiberglass enclosures will be used to house the samplers and associated electronic equipment. These enclosures will be bolted to the concrete pads and will be locked to secure the monitoring equipment.

5.2 Maintenance and Calibration

A complete maintenance program will be performed at a DII after each large storm event during the monitoring period, or in the absence of rain, on a monthly basis. Maintenance will include checking the performance of the equipment, checking power supplies, inspecting and clearing intake structures, cleaning contaminated equipment, and performing necessary equipment calibrations. Calibrations will be conducted in accordance to specifications in the individual component manuals.

Stormwater equipment maintenance visits will be thoroughly documented. Written documentation includes the action taken at a site as well as the date performed. Accurate and thorough records of station visits will be maintained to aid in the evaluation of a DII's performance. The log illustrated in Form I in Tab 6 of the *FGN* will be used to document maintenance and calibrations.

Equipment needed for stormwater sampling includes sampling equipment, sampling containers, safety equipment, personal rain gear, Storm Kits, and vehicles equipped with some type of mobile communication, and highway safety equipment (see lists). The necessary equipment will be loaded into the appropriate vehicles early in the storm preparation sequence.

Storm Kit Equipment List

- Keypad/display
- 9-pin cable from keypad to data logger
- Full set of keys (on floatable bobber)
- Flashlights (2)
- Maps for required areas
- Large and small flat screwdriver
- Umbrella
- High quality alkaline D-cell batteries
- Spare sample labels
- Pencils and indelible markers
- Desiccant (for flow meter)
- Diagonal clipper
- Electrical tape
- Cable ties (assorted sizes)
- Utility knife and rubber bands
- Ziplock baggies (assorted sizes)
- Labeling tape
- Powder-free nitrile gloves

Storm Mobilization List

- Storm kit
- Log books
- Paper towels
- DI (de-ionized) water squirt bottles
- Tape gun with clear tape
- Spare sample labels
- Ice scoop
- Sample control paperwork
- Extra fine indelible markers
- 1-gallon bottles in protective containers
- Coolers and ice
- Grab pole
- DI water (3-gallon jug)
- Two-way radio or cellular phone
- Personal rain gear and safety gear

5.3 Preparation and Logistics

Success of the sampling effort requires careful preparation and planning to assure that high quality samples are obtained in association with each storm event.

5.3.1 Weather Tracking

Weather tracking will be the responsibility of the Task Order Manager and Storm Control personnel. During the wet season, the weather will be continually monitored with increased frequency as incoming storm systems are predicted. Sources of weather information to be used to track incoming storms include the following: National Weather Service, Weather Watch Service, Weather Network (WeatherNet), public broadcast information available on the Weather Channel and local news stations, and radar and satellite images downloaded from the Internet (e.g., www.weather.com).

5.3.2 Mobilization and Staffing

A staffing plan, which designates personnel and equipment for each facet of storm monitoring, will be developed as soon as a potential storm event is forecast. Crews will consist of two individuals. The staffing plan will include the following information:

- Personnel needed for each position.
  - Storm Control
  - Shift Leader
  - Crew Chiefs
  - Crew Assistants
- Shift and zone (pilot facilities manned by a single crew) designations.
- Equipment mobilization.
- Communication channels.

Communication Channels

Communication channels will be established for personnel to contact each other before and during a storm event. A telephone tree will be used to facilitate contacting field personnel and other key individuals. Phone lists with home and work numbers and other key contacts will be made available to potential crew members. Two-way radio or cellular telephone communication links to field crews are essential for efficient stormwater monitoring.

5.3.3 Monitoring Station Preparation

Prior to a storm event, the DII monitoring stations will be made ready to sample. This preparation includes entering the calculated “Volume-to-Sample” values, setting the autosampler and the data logger to sampling mode, pre-icing the sample bottle, and performing a general equipment inspection. The Standard Operating Procedures for

Automatic Stormwater Monitoring will be consulted for specific details on each station preparation.

Determination of Volume-to-Sample

The latest weather forecast prior to each storm event will be examined to determine the proper "Volume-to-Sample" value to enter into the system. The amount of expected rainfall, how the station performed during the previous storm, and how much water is needed for analysis at the station for each storm event would be taken into consideration.

The "Volume-to-Sample" is entered as a number with units in cubic feet (cf). To determine this number, the drainage area in acres and the runoff coefficient, which is a number that reflects the permeability of the land in the study area. The following equation will be used to determine the volume of water expected at a DII for a given rainfall:

A x B x C x 3630 = volume in cf

Where:

A = inches of rain
B = drainage area in acres
C = runoff coefficient for land area
3630 = conversion factor: acre-inches to cubic feet

To determine how much water will pass the monitoring station between samples, divide this result by the number of samples needed to satisfy the water volume requirement for analysis. Exhibit 9.2 in Tab 9 of the *FGN* indicates the “Volume-to-Sample” value needed to collect the correct sample amount of water for the amount of expected rainfall.

After the proper “Volume-to-Sample” value is determined, it will be entered into the system before the rainfall starts. The runoff value will generally be entered from the remote computer. The value can also be entered upon arrival at the site before the system has entered storm mode. It is important that this value is accurate as possible; if the value is too high, the system will not collect enough water to be analyzed, and if the value is too low, the system may sample too fast to be monitored effectively (i.e., the percent storm capture will drop).

Prepare Sampler

The autosampler will be reset and programmed to take 36 400-ml aliquots. Also other user-entered parameters (tubing length, head height, bottle size, composite sample, sample upon one pulse, and enabled liquid detector) will be set correctly.

During each site visit, the state of the System Status Flags (switches) and Program Signature will also be recorded. These provide important information on the current sampling mode and overall integrity of the site program.

Ice Sample Bottles

The sample bottles will be iced or refrigerated to 4±2 ^{o}C after the decision has been made to monitor the storm and prior to initial sample collection. If this is not possible, the bottles will be iced immediately upon the first visit.

General Inspection

A brief physical inspection of the equipment will be made to make certain that there are no obvious problems such as broken conduit or a kinked hose. If possible, the intake will be cleared of debris; at sites with confined entry access, this is only possible if the safety requirements listed in Appendix II are met.

Documentation

Upon each site visit, whether during storm mode or not, records of the visit will be accurately recorded on the field form (Form I in Tab 6 of the *FGN*). Whenever possible, any data being recorded by the sampling system (for example, time or current stage) will be verified. Also, once during each storm event site visit, the Empirical Observation Checklist will be completed (Form H in Tab 6 of the *FGN*).

General Visitation Data

During each station visit, several display locations will be recorded. The log sheets will be used as a guide to the proper display locations to record. The following data will be recorded at both the influent and effluent stations:

- Data logger stage.
- Velocity (ft/s).
- Q (flow in cfs).
- Station ID.
- Flow meter battery voltage.
- Cellular equipment battery voltage.

Storm Visitation Data

Additional data will be recorded in the logbooks during storm monitoring. The log sheet will be used to determine the necessary information. The following data are uniform for each station:

- Volume (cf)
  This is the volume of water that passed the station during the previous execution interval (one minute).
- Storm Sum
  This indicates the accumulated runoff volume in cubic feet (cf) that has passed the station since the last sample.
- Percent Storm Capture
  This indicates the percent of the storm effectively sampled by the system, and it provides a quick evaluation of the quality of the monitoring.
- Volume-to-Sample
  This value indicates the runoff volume (in cf) that will pass the station before the system will take the next sample.
- Sample Count
  This number indicates the number of samples taken in the current bottle. It automatically re-zeroes every time a bottle is filled.
- Total Rain (inches)
  The total rainfall in inches since the start of the storm. This is accumulated each time that the rain bucket tips.
- Max Flow (day)
  This indicates the Julian day on which the maximum flow occurred.
- Max Flow (time)
  When this number is positive, it indicates that the system was sampling during peak stage. If this number is negative, sampling did not occur during the peak stage because the bottles were full.
- Max Stage (feet)
  This indicates the height of the maximum stage during the current storm.
- Max Flow (cfs)
  This indicates the maximum flow rate during the current storm.
- Storm Volume (cf)
  This indicates the total volume of water that has flowed past the station since the beginning of the storm.
- Storm Volume Sampled (cf)
  This indicates the total volume of water that flowed past the station while the system has been in storm mode.

After the data have been recorded, the system will be placed in low power.

5.4 Storm Monitoring

A priority objective of storm monitoring is to maximize the percent storm capture of the composite sample. This will be accomplished by changing out full sample bottles with empty ones. If all bottles do fill, the full sample bottles will be replaced and the system will be reset. To determine approximately when the bottles will fill and to ensure that the sampling process is not interrupted, the Storm Sum and the “Volume-to-Sample” will be

evaluated. By examining how quickly the Storm Sum value is approaching the "Volume-to-Sample" value, the approximate time until the next sample is taken can be determined, as well as the approximate time until the bottles fill. The monitoring crew will be aware of the current status of each station in each of its BMP pilot facilities to determine which station will fill all bottles first so they can be onsite to change out filled bottles. If the station has been set properly for the amount of rainfall, changing the sample bottles will not be necessary. "Volume-to-Sample" settings will take into account the volume of sample required to meet analytical needs. This study requires approximately 3 liters of sample to meet these needs.

The data logger pulses the autosampler to take a sample when the accumulated Storm Sum equals the "Volume-to-Sample". The storm sum is then reset to zero and the process is repeated. This continues until the storm ends or the bottles fill. Ideally, the "Volume-to-Sample" value will be accurate for the amount of anticipated rainfall, and the bottles will not need to be changed during the storm. If the rainfall is different than that predicted, the bottles may fill before the end of the storm. If this occurs, sampling will halt until the bottles are changed and the system is reset. While the system is reset, part of the storm is not being sampled, and the percent capture will show a decrease. It is therefore imperative that the system is reset and the sample bottles are changed immediately to maintain 100% storm capture.

5.4.1 Storm Procedure

Upon arrival at a station during a storm event the status of the sample bottles will be checked immediately. If it is not necessary to change the bottle at that time, the appropriate data on the log sheets will be recorded and the necessary physical measurements and observations will be taken. An approximate time that the bottles will fill will be determined, and, depending on how much time is available, the next station will either be visited or the team will wait until the bottles fill.

If the sample bottles are full, the system will be reset immediately, and the bottles replaced. When the bottles have been changed, the necessary station data will be filled in on the field log sheets.

5.4.2 Sample Bottle Replacement

The removal of the four 1-gallon glass sample bottles from the sampler requires great care; the bottles are heavy when full and are very slippery when wet, as well as being expensive and fragile. More importantly, if the sample is lost or contaminated, all of the effort and expense of the storm monitoring process is wasted. Two people will be present to ensure the security of the bottles and of the sample itself. Extreme care will be taken not to kink the intake hose when handling the sampler.

The bottle numbers will be recorded in the logbook and each bottle will be labeled appropriately. When new bottles have been put in place, they will be re-iced and the sampler reset to continue sampling. Full bottles will be kept iced until composited.

5.4.3 Storm Monitoring Office

The main objective of the Storm Monitoring Office is to update field crews on the status of their stations. This will greatly reduce the amount of time a crew will spend driving during storms. The monitoring of stations from a remote computer consists of calling each station and recording certain data for evaluation. When it is determined that a sampling system is close to filling all bottles, a field crew will be called and alerted to the status of the station. Remote interrogation of the storm stations will be logged using Form K in Tab 6 of the *FGN*.

Generally, the Storm Monitoring Office is also the storm control position. This means that critical decisions regarding the status of storm monitoring are made with input from the Storm Monitoring Office.

Therefore, this position requires awareness of the latest weather forecasts to make informed decisions on the continued monitoring of the storm.

5.4.4 Post-Sampling Procedures

After a storm event has ended, the stations need to be shut down. The station will be left ready for the next storm event in case there is insufficient time for a maintenance visit between storms. The following items will be taken care of, and will be well documented in the field logbook.

1. The storm monitoring program will be reset to prepare for another storm event.
2. The four 1-gallon sample bottles will be replaced and the sampler reset.
3. The station will be physically inspected to determine if damage was sustained during the storm event. The flow sensor will be inspected to determine if it is blocked by debris, or the intake is clogged. (This is only possible if confined space safety requirements are met).
4. The data will be retrieved. This will be done via modem from either the remote monitoring computer or directly in the field using a laptop computer.
5. All battery voltages will be checked; batteries that are low will be replaced.
6. An Empirical Observation Checklist (Form H in Tab 6 of the *FGN*) will be completed one time during the event.

Data Retrieval

Data will be retrieved (dumped) from the data logger after each storm event during the storm season, and approximately every month during dry weather.

Chain of Custody Forms

When the samples have been collected, the paperwork will be filled out to ensure a smooth transfer of samples to the analytical laboratory. Chain-of-Custody Forms will be filled out in detail describing the type of samples, the number of samples, and the times that the samples were collected. These forms will accompany the samples to the laboratory.

5.4.5 Evaluation

Upon termination of a storm monitoring event, evaluation of the influent and effluent stations' performance will be documented and reviewed before the samples collected are deemed valid. Evaluation of a monitoring station's performance is based on the answers to the following questions:

- Was the storm representative of the effectiveness range of the DII?
- Was capture of peak flow or runoff achieved at both sampling points?
- Did the equipment perform as designed throughout the duration of the storm event?
- Did the samplers accurately collect equal and reliable storm sample aliquots?
- Did the DII function as designed?

5.4.6 Grab Sampling

Total petroleum hydrocarbons (TRPH) samples are unsuitable for collection by automatic means because some material adheres to the surface of the tubing and the sample container. However, because one of the objectives is to determine the constituent removal efficiency using a mass balance approach (using flow-weighted effluent analyte concentrations and analyte concentrations of material collected by a DII), flow-weighted composite samples will be collected by automatic means and analyzed for TRPH – oil, diesel, and gasoline.

5.5 Sample Tracking and Handling

Samples, regardless of their matrix, will be kept properly chilled and transferred to the analytical laboratory within holding times to achieve the highest quality data possible. To ensure proper tracking and handling of the samples, documentation will accompany the samples from the initial pickup to the final extractions and analysis. This documentation includes Chain-of-Custody Forms (Form M in Tab 7 of the *FGN*). These forms or equivalent will be used to track and handle samples.

Collected samples, including the composite containers, will be labeled with the following information:

- Project name.
- Date.
- Time.
- Site location.
- Site No.
- DII.
- Effluent sampling location.
- Preservative.
- Collector's initials.
- Sample I.D. number.
- Analyte(s) to be analyzed.
- Composite sample.

The analytical suite for each station depends upon the total volume of water collected for the storm event. When insufficient volumes have been collected, Storm Control will need to approve the analysis of the stormwater. A Priority Analysis Sheet will be used in conjunction with a Sample Bottle Evaluation to determine the analytical suite for each station, based on the volume of water collected at that station, the volume to sample, and the percent storm capture. When the storm has been evaluated and samples from each station accounted for, a duplicate station and a QA/QC station will be selected by Sample Control based on stormwater volumes available. Duplicate and QA/QC samples will be prepared from the combined volume of the sample collected (i.e., from each of the four 1-gallon bottles) at the selected duplicate and QA/QC station.

Duplicate and QA/QC sample bottles will be labeled, recorded on the Chain-of-Custody Form, and transported to the analytical laboratory.

Sample bottles for composite samples are transferred at the end of the storm event. Samples will be properly logged on the Chain-of-Custody Form and kept chilled in coolers. There will also be a field duplicate, a field blank, and extra water collected for QA/QC samples. These QA/AC samples will be collected at one of each consultant's BMPs during each storm event monitored. The crews monitoring the stations will be fully briefed on the procedures for collecting QA/QC samples, and will be familiar with the sample identification numbering scheme for these samples because they are to be submitted to the laboratory as blind samples. These samples will be labeled, recorded on the Chain-of-Custody Form, and transported to the analytical laboratory.

Each sample collected will receive a unique alphanumeric code (sample I.D. number) for tracking. This code will be standard for samples and contain information as to the station, date, and sequential monitoring event number. The following is an example of this code:

SITE No.-IN-32898-001

Where:

Site No. = Site number of BMP site.
IN = Influent sampling point at the site; EF = effluent sampling point.
32898 = Julian day and year
001= First storm event monitored during this program at this location

If multiple bottles are used or needed, the last data field will indicate the bottle number and the total bottles in that sampling event (i.e., 001-1/3, 001-2/3, 001-3/3 for a three-bottle collection scheme).

A set of QA/QC samples will be provided with each type of sample analyzed for each storm event. The analytical laboratory may also require additional QA/QC samples if one type of analysis is to be run in more than one batch.

Blank samples, duplicate samples, MS/MSDs, and replicate/splits need not be from the same station. However, per storm event (or batch run), these QA/QC samples will be analyzed for the standard analytes as field samples. Most field QA/QC samples are submitted blind to the analytical laboratory, however, additional sample volumes provided to the laboratory for laboratory replicates or matrix spikes and matrix spike duplicates will be clearly identified. The main types of QA/QC samples that will be utilized for this study are as follows:

Duplicate Analyses - These analyses will be performed for composite samples and will require an additional set of sample containers to be sub-sampled. The results will allow evaluation of sampling error introduced by both field sampling and laboratory analyses by showing the reproducibility of the sample collection and analyses. Duplicate samples will be sent "blind" to the laboratories. One duplicate sample will be collected from one of each consultant's sampling locations during each storm event sampled and analyzed for the full list of analytes.

Duplicate samples will be identified by adding 500 to the sequential storm event number. For example, a duplicate sample for the site identified above will be:

SITE No.-IN-32898-501

Blanks - These are for field as well as laboratory samples. Blanks help verify that the equipment and the sample containers are not contaminated, and the sampling techniques used are non-contaminating. Sample bottles, Teflon® tubing, and filters will be rinsed with reagent grade analyte free deionized water separately. The collected rinsates will be analyzed for the full list of analytes for the composited samples. Blanks will also be run on the analytical equipment. Rinsate blanks will be run on two samplers used by each consultant at one of their BMPs prior to the installation of the equipment. Each time a

batch of composite bottles is cleaned, five percent of those bottles will be blanked. Each time a batch of filters is purchased five percent of those filters will be blanked.

Equipment rinsate blanks will be identified by adding 600 to the sequential storm event number. For example, an equipment rinsate blank collected from the monitoring equipment from the site identified above will be:

SITE No.-IN-32898-601

Field blanks will be identified by adding 700 to the sequential storm event number. For example, a field blank collected at the site identified above will be:

SITE No.-IN-32898-701

Matrix Spike and Matrix Duplicate Spike (MS/MSD) - The laboratory will require additional sample volumes for analyses that require matrix spikes and matrix spike duplicates to evaluate precision and accuracy of the laboratory analytical method, and to evaluate any matrix interference. MS/MSDs are analyzed for their analyte(s) and then spiked with a known amount of analyte(s). One MS/MSD sample will be run on metal and TRPH samples from one of each consultant's sampling locations during each storm event sampled.

MS/MSD samples will be indicated on Chain-of-Custody Forms by clearly identifying that the sample is for MS/MSD purposes.

Laboratory Replicate/Split - This QA/QC analysis will require additional sample volumes. It is a duplicate analysis performed on the same sample and evaluates the repeatability (precision) of the analytical laboratories' results. One split sample will be run from one of each consultant's

BMP sampling locations during each storm event sampled and analyzed for the full list of analytes.

Laboratory Replicate/Split samples will be indicated on Chain-of-Custody Forms by clearly identifying that the sample is for Laboratory Replicate/Split sample purposes.

5.6 Laboratory Selection, Sample Container Preparation, and Analytical Methods

5.6.1 Laboratory Selection

The selected laboratories have extensive experience with environmental samples and have the ability to provide rapid response to meet critical holding time requirements for analytes requiring expeditious analysis. Laboratories will be certified by the California

Department of Health Services for the requested analyses. Refer to Tab 2 in the *FGN* for specific laboratory listings.

5.6.2 Holding Times, Sample Bottles, and Preparation

The laboratories will be responsible for providing appropriate sample containers and, when necessary, with preservatives for each analysis. Table 5.1 provides a summary of sample volumes required for each analysis, along with the types of containers, holding times, and preservative. Because additional volumes are necessary for laboratory QA/QC, sample containers will provide at least twice the volume necessary to perform the requested analysis. The volume of the stormwater composite from each site is often the critical factor in determining the volume of sample that can be provided to the laboratory. The Project Task Order Manager and/or Storm Control personnel, in conjunction with the laboratories, will determine the allocation of sample volume for different analyses if sample volumes are not adequate to provide needed volume for each analysis. Table 5.1 lists the analyses along with a Priority Ranking. Also listed on Table 5.1 are the analytical methods and detection limits.

For composite samples, the start of holding times is considered to be the time that the last aliquot was sampled.

5.6.3 Project Detection Limits

Recommended analytical methods and detection limits for this project are listed in Table 5.1. The detection limits in this table are target detection limits. In some cases, detection limits may need to be adjusted due to limited sample volumes or potential matrix interference. In such cases, appropriate data qualifiers will be applied to the associated data.

Table 5.1

Stormwater Matrix

Analytical Parameters, Methodologies, Detection Limits, Holding Times, Container Volumes and Types, and Preservation

Analyte	Priority Rank	Reporting Limit	Units	Analytical Technique	Method Number	Holding Time	Minimum Sample Volume	Preferred Volume and Container Type[1]	Preservation
Conventionals									
PH	1	0.1	Unit	Electrode	EPA 150.1	Immediately[2]	100 mL	1-100 mL glass/plastic	4°C
Specific Conductance	1	1.0	µmhos/cm	Electrometric	EPA 120.1	Immediately[2]	500 mL	1-500 mL glass/plastic	4°C
Hardness	5	2	mg/L	Titrimetric/ Colorimetric	EPA 130.2	6 months	100 mL	1-200 mL glass/plastic	HNO_3 to pH<2, 4°C
Total Suspended Solids	1	1	mg/L	Dried Filter Weight	EPA 160.2	7 days[3]	1 L	1-500 mL glass/plastic	4°C
Nutrients									
Nitrate-Nitrogen	2	0.01	mg/L	Colorimetric Ion Chromatography	EPA 353.3 EPA 300.0	28 days 48 hours	200 mL 200 mL	1-500 mL plastic 1-500 mL plastic	4°C and H_2SO_4 to pH<2 4°C
Total Kjeldahl Nitrogen	3	0.1	mg/L	Titrimetric/ Colorimetric	EPA 351.3	28 days	500 mL	1-1L plastic	4°C and H_2SO_4 to pH<2
Total Phosphorus	4	0.002	mg/L	Colorimetric	EPA 365.3	28 days	100 mL	1-250 mL plastic	4°C and H_2SO_4 to pH<2
Total/Dissolved Metals[4],[5]									
Copper	1	1	µg/L	ICP-MS	EPA 200.8	6 months	2 @ 500 mL	2-1L plastic	4°C and HNO_3 to pH<2 and filter
Lead	1	1	µg/L	ICP-MS	EPA 200.8	6 months	2 @ 500 mL	2-1L plastic	4°C and HNO_3 to pH<2 and filter
Zinc	1	1	µg/L	ICP-MS	EPA 200.8	6 months	2 @ 500 mL	2-1L plastic	4°C and HNO_3 to pH<2 and filter
Organics[6]									
Total Petroleum Hydrocarbons – Diesel/Oil	1	250/200	µg/L	GC	EPA 8015M	14 days	1 L	2-1L amber glass	4°C
Total Petroleum Hydrocarbons - Gasoline	1	50	µg/L	GC	EPA 8015M	14 days	2-40 mL	3-40 mL VOA vials	4°C, HCl to pH<2

1. Analytes with the same preservative can be combined into a single container if the same laboratory is performing the analyses.
2. pH and Specific Conductance will be measured by the laboratory immediately upon receipt of the samples.
3. 7 days based upon limit for measuring TSS/no regulatory limit.
4. Total and dissolved metals samples are collected in separate containers. Only the total metals container will receive nitric acid.
5. Dissolved metals will be filtered in the laboratory prior to acidification.

5.6.4 Laboratory Data Package Deliverables

Laboratories will be required to provide a three-week turnaround on deliverables. The deliverable package will include a hard copy and electronic data files. The hard copy will include standard narratives identifying any analytical or QA/QC problems and corrective actions. The electronic data files will contain information found in the hard copy reports submitted by the laboratories. Individual data sets will be submitted as either Microsoft Excel® Workbook files or as Microsoft Access® database files. Each consultant will be responsible for laboratory coordination and data management. Data management will be consistent with Caltrans Data Management Plan – Data Reporting Protocol and Database, Doc. I.D. CTSW-TM-98-005.

5.7 Drain Inlet Insert Sampling

This section describes the sample collection procedures and analyses for assessing the quantity and quality of material collected by a DII.

5.7.1 Drain Inlet Insert Collection

An unused StreamGuard™ DII (geotextile fabric and absorbent material) will be analyzed to determine background levels of contaminants that may exist. An unused Fossil Filter™ DII (adsorbent material) will be analyzed to determine background levels of contaminants that may exist. The unused DIIs will be placed in bags, placed in a coolers, and transported to the laboratory for analysis. Used DIIs will be removed and analyzed when the manufacturer's replacement criterion has been met. For Fossil Filter inserts, the replacement criterion, according to the manufacturer's instructions, shall be when the granules are dark gray or darker, or the medium is clogged with sediment. For Stream Guard inserts, the replacement criterion, according to the manufacturer's instructions, shall be when the sediment depth is greater than 6 inches, or when evidence of an oily sheen is observed in the insert or downstream of the drain inlet. Also, both types of drain inlet media shall be removed annually at the end of the wet season (April 30) and analyzed. The media shall be replaced before October 1 of each year. The following steps will be used to remove the used DIIs from their field installations:

StreamGuard™ DII

1. Don powder-free nitrile gloves.
2. Carefully remove the drain inlet grate. While removing the grate, be sure not to allow the DII or the material it collected to drop into the drain inlet.
3. Place the DII and its contents into a large bag.
4. Place a sample label on the zip-top bag and record the sampler's initials, date, and time.
5. Immediately pack the samples into a cooler.
6. Record the required information on the Chain-of-Custody Form.

7. Document the sampling event, recording information in the designated field logbook.
8. If Caltrans decides to conduct additional performance testing on the DII, install a new DII and reinstall the drain inlet grate.
9. If no additional testing is required, reinstall the drain inlet grate without the installation of a new DII.

Fossil Filter™ DII

1. Don powder-free nitrile gloves.
2. Carefully remove the drain inlet grate. While removing the grate, be sure not to allow the DII or the material it collected to drop into the drain inlet.
3. Remove collected sediment from the top of the trough and place it into a sample container.
4. Remove the adsorbent material and place it into a bag.
5. Place a sample label on each bag and record the sampler's initials, date, and time.
6. Immediately pack the samples into a cooler.
7. Record the required information on the Chain-of-Custody Form.
8. Document the sampling event, recording information in the designated field logbook.
9. If Caltrans decides to conduct additional performance testing on the DII, replace the adsorbent material to the same level (quantity) as was originally used.
10. If no additional testing is required, then remove the filter assembly and reinstall the drain inlet grate.

5.7.2 Drain Inlet Insert Analyses

DIIs and the material they collected will be analyzed for constituents listed in Table 5.2. This table also lists the required detection limits, analytical holding times, required preservation, and container sizes and types. Laboratory turn around times and data deliverables will be the same as those for the stormwater samples. In addition to these analyses, total weights of each sample will be measured. Weights of samples will be used with analyte concentrations to perform a mass balance calculation, which will be used to determine the DII's pollutant removal efficiency.

Table 5.2
Solid Matrix (Drain Inlet Insert)[(1),(2)]
Analytical Parameters, Methodologies, Detection Limits, Holding Times, Container Volumes and Types, and Preservation

Parameter	Method	Units	Detection Limit	Maximum Holding Time	Preservation	Container Size/Type[(3)]
Total Recoverable Petroleum Hydrocarbons (TRPH)	418.1 (IR)/ 1664HEM	mg/kg	10	28 days	None	Sediment: glass jar Other Material: zip-top bag
Total Metals: - Copper - Lead - Zinc	6020	mg/kg	 2.5 0.3 2.0	180 days	None	Sediment: glass jar Other Material: zip-top bag

1. Solid Matrix includes the following:

StreamGuard™	Fossil Filter™
Geotextile fabric	Adsorbent material
Absorbent material	Sediment
Sediment	

2. The total mass of each solid matrix will be measured.
3. Sample container will be large enough to hold entire contents of DII and the material it collected.

5.8 Empirical Observations

5.8.1 Purpose of Empirical Observations

Performance assessments of BMP facilities cannot be fully ascertained through analytical methods. "Empirical" observations are also critical in determining the overall performance of implemented water quality management practices and in ensuring that the practices are maintained at optimum levels. Other factors such as maintenance activities, environmental variability, and physical processes, which cannot be determined analytically, can greatly influence the performance of a particular BMP. Some of these factors such as rainfall quantity, rainfall intensity, and hydraulic residence times can, and, will be assessed through physical measurements. Other components such as trash build-up, sediment deposition, and runoff appearance can be best assessed through careful documented observations.

5.8.2 Guidelines

All observations will be succinct but also complete. For a DII performance evaluation, the following observations will be taken at the influent location, within the DII, and at the effluent location (i.e., sample collection point):

- Meteorological characteristics (present and preceding period).
- Hydrologic and hydraulic characteristics (flowing and/or standing water).
- Inlet conditions (problems affecting performance).
- Water quality appearance (visual, olfactory) to make a rough assessment of changes in water quality.
- Solids deposition (trash and debris, sediments, organics) and resuspension.
- Treatment medium condition.
- Outlet conditions (problems affecting performance).
- Mosquitoes and other vectors.
- Structural condition of facility.
- Monitoring equipment condition.

5.8.3 Checklist for Sampling and Monitoring Personnel

Form H in Tab 6 of the *FGN* provides a checklist (log form) that will be completed by sampling and monitoring personnel during every storm event visit to the facility.

6.0 REFERENCES

Foss Environmental, StreamGuard™ Product Guide. Summer 1998.

KriStar Enterprises, Inc. Fossil Filter™ Product Guide. September 1, 1996.

Larry Walker and Associates. 1997. Guidance Manual: Stormwater Monitoring Protocols. Prepared for California Department of Transportation, Sacramento, CA. August 15, 1997.

Robert Bein, William Frost and Associates. 1997. Scoping Study, Retrofit Pilot Program, Caltrans District 7. Calif. Dept. Trans., Sacramento, CA.

Telephone conversations with Chuck McKinley of Maintenance Products Inc. and Heather Haskins of Foss Environmental, Fall 1998.

USEPA, Test Methods for Evaluating Solid Waste, Physical/Chemical Methods, SW-846, Final Update III, June 1997.

Watershed Management Institute. 1997. Operation, Maintenance, and Management of Stormwater Management Systems. Watershed Management Institute, Ingleside, MD.

StreamGuard™

NONPOINT SOURCE POLLUTION CONTROL PRODUCTS

The StreamGuard line of products incorporates innovative designs and new technologies to provide efficient, cost effective solutions. Extensively tested and engineered, each device is designed to remove pollutants from contaminated water.

StreamGuard Oil & Grease Catch Basin Insert (#3001 1/Box) (#3021 10-pack)

NOW WITH NEW NON-LEACHING CO-POLYMER ABSORBENT!

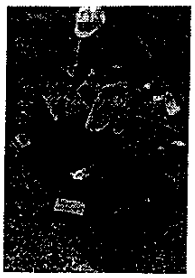

This oil-only model is equipped with an oil absorbent polymer. Unlike common adsorbents, the oleophilic StreamGuard™ polymermedia will not deteriorate or release absorbed hydrocarbons. As contaminated water flowsthrough the insert, the geotextile fabric absorbs oil and retainssediment. Once contaminants have accumulated, the body of the unit fillswith contaminated water and sediment is collected in the bottom of the insert. Floatingoil and grease are absorbed by the StreamGuard Co-Polymer contained in a screen bag fixed within the unit. Great for parking lots and vehicle storage areas. FITS ANY SIZE CATCH BASIN UP TO 30"x 40"! 1/pack 2.6lbs. NOTE: Reuse of the oil unit is not recommended due to the potential for release of captured oilthat is absorbed in the insert fabric. If hazardous materials are be present in the stormwater, disposal ofthe inserts should be in accordance with local environmental regulations.

INSTALLATION:

1) Remove catch basin grating
2) Clean dirt and debris from grating ledge.
3) Lay StreamGuard insert over the catch basin opening with the bag side of the insert inside the basin.
4) Replace the grating, pinching the insert fabric between the grating and the catch basin.
5) Cut the excess fabric off with a blade knife. A 3 to five inch wide strip of fabric should be left around the outside of the grating if insert is to be reused.

MAINTENANCE:

The StreamGuard™ inserts for oil are designed to operate for up to 3 to 6 months under normal conditions. Where heavy oil and/or sediment contamination are present the unit will have a reduced life expectancy. The accumulation of sediment can be determined by probing with a yard stick. When the unit has collected about 6 inches of sediment it is recommended that it be replaced. The unit should also be replaced if free oil can be seen floating on the water in the bag. It is recommended that the inserts be regularly inspected and observations logged as a best management practice. Log sheet is included with each unit.

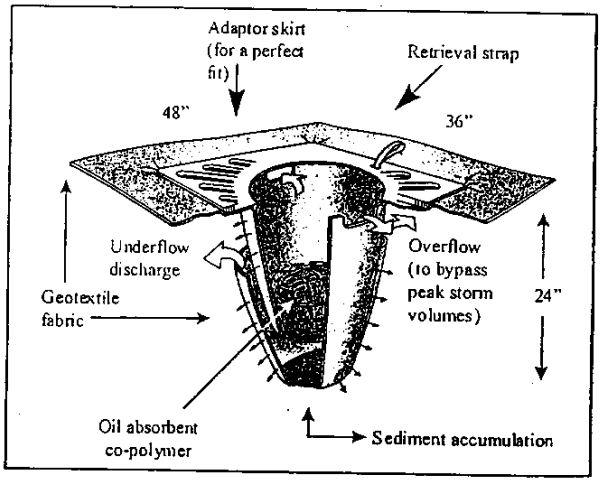

Line Art © 1998 Foss Environmental. All Rights Reserved.

PRODUCT SPECIFICATIONS

Fabric Property	Test Method	Unit	Value
Fabric Weight	ASTM D-5261	oz/yd²	8.0
Thickness	ASTM D-5199	mils	145
Water Flow Rate	ASTM D-4491	gpm/ft²	120*
Total Surface Area	by measurement	square feet	18
Permeability	ASTM D-4491	cm/sec	.5
U.V. Resistance	ASTM D-4355	%	70

* The total water flow rate through the insert in new condition is in excess of 500 gpm. The overflow rate is approximately 250 gpm.

The StreamGuard mark and logo are property of Foss Environmental Services. All rights reserved.

For Additional Information & Our Current Product Catalog.....

Foss Environmental PO Box 80327 Seattle, WA 98108 (800) 909-3677 Fax (888) 234-3677
Visit our website http://www.fossenv.com e-mail: fossenv@fossenv.com

Fossil Filter

General Specifications For Standard Filter Units

Scope:

This specification describes a catch basin filtration system that incorporates EPA approved adsorbents installed in a drainage inlet to collect petroleum-based contaminants while permitting the undisturbed passage of water.

Material Properties:

The trough structure shall be manufactured from petroleum resistant fiberglass and include an area to retain silt and debris and, to preclude backing up of the system, an overflow bypass area. The filter screens shall be of stainless steel (Type 304). The filter medium shall be an adsorbent material that contains no hazardous ingredients as defined by the U.S. Environmental Protection Agency (EPA), U.S. Occupational Safety and Health Administration (OSHA) and the World Health Organization (WHO).

Installation:

Installation shall be performed by a certified **Fossil Filter™** installer. A **Fossil Filter™** Installation record, to be provided upon installation, shall be kept by the end user.

Maintenance and Disposal:

Maintenance services shall be provided by a certified **Fossil Filter™** maintenance provider. A **Fossil Filter™** Maintenance Record, to be provided upon installation, shall be kept by the end user.

Disposal of exposed filter media shall be in accordance with local regulatory agency specifications to ensure compliance with all Local and State environmental legislation.

To view non-standard **Fossil Filter™** installations: trench drain inlet, combo curb/gutter inlet, standard flared inlet, and the adjustable flange extension click here.

To view the **Fossil Filter™** filtration process detail, proper fill height detail, and wall mounting detail click here.

To view the **Fossil Filter™** important questions and answers section click here.

To view a list of **Fossil Filter™** distributors and manufacturers click here.

To view Best Management Practices for Catch Basin Filtration Systems click here.

Fossil Filter

Fossil Filter "Drop In" Catch Basin Insert

U.S. Patent Number 5,720,574

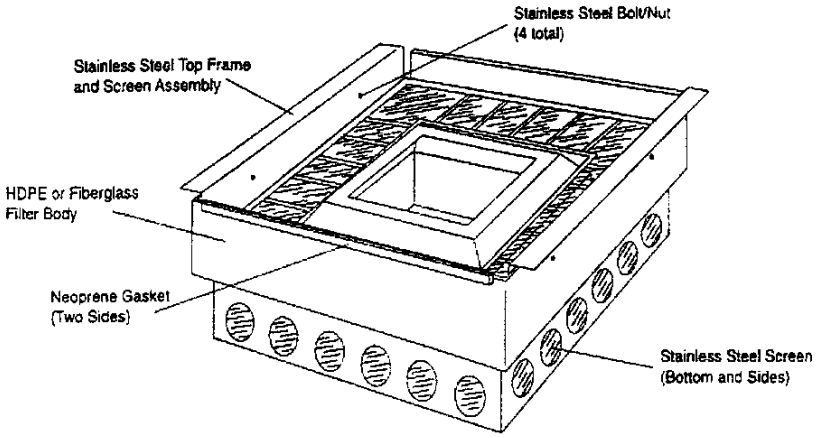

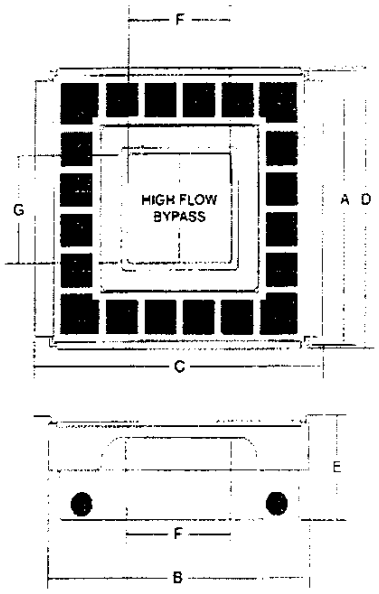

1. Filter body shall be one piece manufactured from either High Density Polyethylene (HDPE) or petroleum resistant fiberglass meets or exceed PS 15-69
2. All metals components shall be stainless steel (Type 304).
3. Refer to dimension chart for catch basin and filter sizing.
4. Filter medium shall br **Fossil Rock** installed and maintained in accordance with manufacturer recomendations.
5. Refer to Manufacturer's recommendations for maintenance program.

Model No.	A	B	C	D	E	F	G
FF-V64	13"	13"	15.5"	13.5"	6"	5"	5"
FF-1616	15"	15"	17.5"	15.5"	8.5"	6"	6"
FF-1818	17"	17"	19.5"	17.5"	8.5"	8"	8"
FF-1624	23"	15"	17.5"	23.5"	8.5"	6"	13"
FF-1824	23"	17"	19.5"	23.5"	8.5"	13"	8"
FF-2424	23"	23"	26"	23.5"	8.5"	13"	13"
FF-2430	29"	23"	26"	29.5"	8.5"	13"	19"
FF-2436	35"	23"	26"	35.5"	8.5"	13"	25"
FF-2436S	23"	35"	39"	23.5"	8.5"	25"	13"
FF-2448	47"	23"	26"	47.5"	8.5"	13"	38"
FF-3030	29"	29"	34"	29.5"	8.5"	19"	19"
FF-3636	35"	35"	39"	35.5"	8.5"	25"	25"
FF-3648	47"	35"	39"	47.5"	8.5"	25"	37"
FF-4848	47"	47"	53"	47.5"	8.5"	37"	37"

Fossil Filter

Fossil Filter "Drop In" Installation Detail

U.S. Patent Number 5,720,574

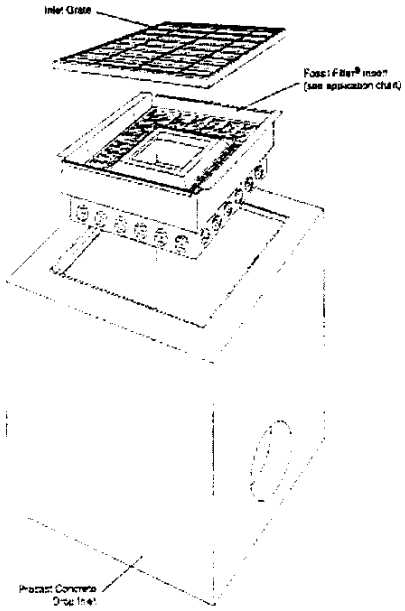

1. Filter body shall be one piece manufactured from either High Density Polyethylene (HDPE) or petroleum resistant fiberglass meets or exceed PS 15-69
2. All metals components shall be stainless steel (Type 304).
3. Refer to dimension chart for catch basin and filter sizing.
4. Filter medium shall br **Fossil Rock** installed and maintained in accordance with manufacturer recomendations.
5. Refer to Manufacturer's recommendations for maintenance program.

MODEL NO.	Filter O.D.	Inlet O.D.
FF-V64	13" x 13"	14" x 14"
FF-1616	15" x 15"	16" x 16"
FF-1818	17" x 17"	18" x 18"
FF-1624	15" x 23"	16" x 24"
FF-1824	27" x 23"	28" x 24"
FF-2424	23" x 23"	24" x 24"
FF-2430	23" x 29"	24" x 30"
FF-2436	23" x 35"	24" x 36"
FF-2448	23" x 47"	24" x 48"
FF-3030	29" x 29"	30" x 30"
FF-3636	35" x 35"	36" x 36"
FF-3648	35" x 47"	36" x 48"
FF-4848	47" x 47"	48" x 48"

Back to Fossil Filter
Back to KriStar Welcome

Fossil Filter

Process, Fill Height, Wall Detail

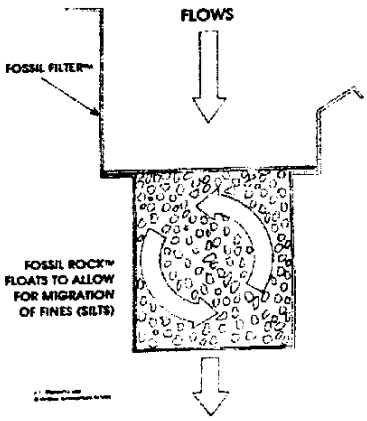

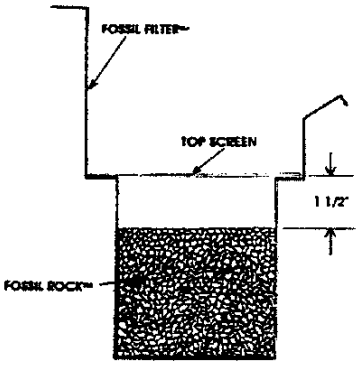

Fossil Rock absorbent material should rest approximately 1-1/2" below top screen when properly filled for maximum effectiveness. Do not overfill.

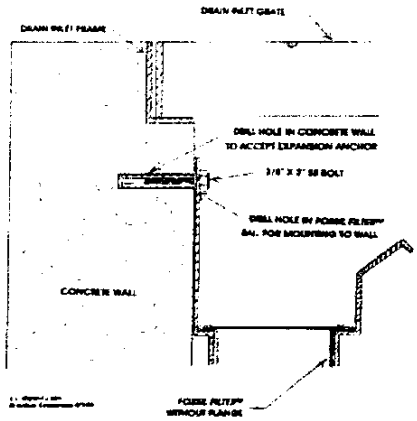

Back To Fossil Filter Start Page

Back To KriStar Welcome Page

Fossil Filter

Frequently Asked Questions

1. WHAT IS FOSSIL FILTER™?
2. WHAT ARE THE MOST APPROPRIATE APPLICATIONS FOR FOSSIL FILTER™?
3. WHAT MATERIALS ARE USED IN THE MANUFACTURE OF FOSSIL FILTER™?
4. WHAT IS THE FOSSIL FILTER™? CONCEPT. HOW DOES IT WORK?
5. WILL THE USE OF FOSSIL FILTER™ SATISFY CURRENT FEDERAL EPA NPDES CRITERIA? CAN FOSSIL FILTER™ BE INCLUDED AS A COMPONENT OF A COMMUNITY'S SWPPP (STORM WATER POLLUTION PREVENTION PROGRAM)?
6. HOW IS FOSSIL FILTER™ INSTALLED?
7. WHEN INSTALLED, WILL THE FOSSIL FILTER™ RESTRICT THE FLOW OF WATER? WILL IT CAUSE THE DRAINAGE SYSTEM TO BACK UP?
8. HAS THE FOSSIL FILTER™ BEEN SUBJECTED TO HYDROLOGICAL TESTING?
9. WHAT SORBENT MATERIAL IS USED IN THE FOSSIL FILTER™? IS IT HAZARDOUS?
10. HAS THE FOSSIL ROCK ADSORBENT BEEN TESTED FOR EFFICIENCY?
11. WHAT ARE THE MAINTENANCE REQUIREMENTS? WHAT IS THE USEFUL LIFE OF THE INSTALLED ADSORBENT?
12. WILL THE FOSSIL FILTER™ FUNCTION EFFECTIVELY IN AREAS SUBJECT TO HEAVY SILT, SEDIMENT OR DEBRIS?
13. ARE THERE KNOWN "ACCEPTED" PRODUCTS CURRENTLY ON THE MARKET THAT FUNCTION AS EFFICIENTLY AS FOSSIL FILTER IN THE REMOVAL OF CONTAMINANTS FROM WATER RUNOFF?
14. WHAT IS THE COST PER FILTER UNIT OF FOSSIL ROCK ADSORBENT?
15. ONCE REMOVED FROM THE FOSSIL FILTER, IS THE EXPOSED ADSORBENT CONSIDERED HAZARDOUS MATERIAL? HOW IS IT DISPOSED OF?
16. ARE FOSSIL FILTER™ INSTALLERS AVAILABLE? ARE MAINTENANCE PLANS AVAILABLE?
17. WHO IS RESPONSIBLE FOR MAINTAINING THE INSTALLED FOSSIL FILTERS™? FOR PROPER DISPOSAL OF THE CONTAMINATED ADSORBENT?
18. WHAT DOES A TYPICAL MAINTENANCE PLAN INCLUDE? WHAT DOES IT COST PER PLAN?
19. HOW DO I GET MORE INFORMATION ON FOSSIL FILTER™? ON THE MAINTENANCE PLANS?

---

1. WHAT IS FOSSIL FILTER™? Fossil Filter is a trough structure that is installed just under the grate of water drainage inlets. The structure contains EPA-approved sorbents, which collect petroleum hydrocarbons and other contaminants while permitting the undisturbed passage of water. Fossil Filter is patented and is a product of KriStar Enterprises, Inc. of Cotati, California.

2. WHAT ARE THE MOST APPROPRIATE APPLICATIONS FOR FOSSIL FILTER™? **Fossil Filter™** was developed and designed to remove petroleum hydrocarbons from water runoff. Its most logical application is anywhere motor vehicles park, are refueled or serviced. Customer and employee parking lots and corporation yards, service stations, airport ramps and refueling areas, even some marinas, are excellent prospects for the installation of **Fossil Filter™**. The **Fossil Filter™** concept can usually be utilized anywhere there is a hydrocarbon problem and the water runoff can be channeled to flow through the Fossil Filter.

3. WHAT MATERIALS ARE USED IN THE MANUFACTURE OF FOSSIL FILTER™? With most models of **Fossil Filter™**, the apparatus structure is available in high-density polyethylene (HDPE) (plastic), fiberglass or stainless steel. The incorporated screens and mounting flanges are made from stainless steel. (See #9 for a discussion of Fossil Rock, the incorporated adsorbent material.)

4. WHAT IS THE FOSSIL FILTER™ CONCEPT? HOW DOES IT WORK? The **Fossil Filter™** concept, which is patented, is essentially as follows: As the surface water flows into the inlet, it passes through the **Fossil Filter™** where Fossil Rock, the installed adsorbent material, removes petroleum-based contaminants while the water

flows on into the drainage system.

The Fossil Filter™ with Silt Basin incorporates a perimeter basin and polyester substrate "skirt". The water flows first into the basin where silt, sediment and debris are collected and contained and then through the filter skirt, through the Fossil Rock adsorbent where the contaminants are removed, and then into the drainage system.

The Fossil Rock adsorbent used in Fossil Filter removes the contaminants from the water through a process called adsorption (acts like a magnet) rather than absorption (acts like a sponge).

5. WILL THE USE OF FOSSIL FILTER™ SATISFY CURRENT FEDERAL EPA NPDES CRITERIA? CAN FOSSIL FILTER™ BE INCLUDED AS A COMPONENT OF A COMMUNITY'S SWPPP (STORMWATER POLLUTION PREVENTION PROGRAM)? The Federal EPA's NPDES program, designed to control the discharge of pollutants to waters of the United States, cites a definition of oil/water separator as *"Adevice installed usually at the entrance of a drain,which removes oil and grease from water) flows entering the drain."* That literally describes Fossil Filter. EPA further mandates the use of BAT (Best Available Technology) while being "economically feasible". Fossil Filter is very appropriate for inclusion in SWPPP's as a BMP (best management practice) for removal of oil and grease from water flows entering the drain. As a matter-of-fact, Fossil Filter has been cited as a BMP in the SWPPP's of many of the local governments and that of several states.

6. HOW IS FOSSIL FILTER™ INSTALLED?

In a four-sided (square or rectangular) drainage inlet? There are three options available for a four-sided inlet:

The first option , for non-standard size inlets, is to assemble the filter from a kit. The trough assembly is fabricated to fit snugly within the inside dimensions of the inlet The filter cartridges (4) are then fabricated to fit within the trough assembly. The cartridges are then filled with Fossil Rock adsorbent and placed inside the trough assembly. The inlet grate is removed and the entire assembly is then installed by resting the assembly's perimeter flanges on the ledge where the inlet grate rests and the grate is then replaced. With inlets that do not have a grate ledge, the kit will include sides without flanges and the assembly is secured to the inlet walls with concrete anchor bolts.

The second option, for standard (common size) inlets manufactured by many of the more prominent precast concrete companies, is a pre-assembled one-piece "drop-in" unit. It is shipped with Fossil Rock installed and is ready for installation. It is installed by removing the inlet grate, inserting the unit to rest on the grate ledges or bolting to the inlet wall (as above), and replacing the grate.

The third option is a pre-formed one-piece fiberglass **Fossil Filter™ with Silt Basin** , which comes in sizes to fit the more common size inlets. It too is installed by resting it on the grate ledge.

In a curb inlet or trench drain? Depending on the length of the curb opening or trench drain, the sections are either cut or assembled to the appropriate length. With the fiberglass or stainless steel units, the two ends are capped. Filter cartridges are then assembled, Fossil Rock inserted, and the cartridges inserted into the straight rail trough. The assembly is then attached to the inlet wall, just below the surface where the water enters the inlet.

In a round inlet? Round units are pre-assembled one-piece units available in some standard sizes. They are installed by removing the inlet grate, resting the flange on the grate ledge and replacing the gate.

NOTE: Special orders for odd sizes or shapes of inlet are possible. Call KriStar Enterprises, Inc. at (800) 579-8819 with special problems.

7. WHEN INSTALLED, WILL THE FOSSIL FILTER™ RESTRICT THE FLOW OF WATER? WILL IT CAUSE THE DRAINAGE SYSTEM TO BACK UP? No, on both counts. If the filter has been properly maintained and not subjected to excessive amounts of debris (leaves, litter, silt, etc.). (See 8 below concerning hydrologic testing.) **Fossil Filter™** is designed to remove harmful Contaminants during initial and low flows ("first flush"), when the bulk of the surface accumulated contaminants enter the inlet. Plus, because it is hydrophobic, the Fossil Rock adsorbent tends to float and move about, which enhances the flow. In the event of very heavy flows, which exceed the flow-through capability, the filter's design allows the excess water to flow over the inside edge of the filter rail, into the overflow bypass area, and then on into the drainage system.

NOTE. Because of the large bypass area, Fossil Filter will not/can not plug up the drainage system.

8. HAS THE FOSSIL FILTER™ BEEN SUBJECTED TO HYDROLOGICAL TESTING? Yes. Tests by

Sandine Engineering Associates of Santa Rosa and Eagle Engineering of Sacramento, California both showed that installed **Fossil Filters™** did not impede maximum design flow of the inlet and that they would effectively filter in excess of 12 gallons per minute per linear foot of filter surface.

9. WHAT SORBENT MATERIAL IS USED IN THE FOSSIL FILTER™? IS IT HAZARDOUS? According to the supplier of Fossil Rock, the adsorbent used exclusively in **Fossil Filter™**, the petroleum hydrocarbon-attracting material is a natural material known as Amorphous Alumina Silicate. It is an inert blend of minerals that contains non-hazardous ingredients, as defined by the Federal EPA, OSHA (Occupational Safety and Health Administration) and WHO (World Health Organization). However, if a large amount of the material in bulk form is contained within a confined area and there is dust, or if the person replacing the filter material is allergic to dust, we recommend using a paper mask to avoid inhalation of the fine particles. Fossil Rock contains no reactive chemicals, is non-carcinogenic, non-biodegradable and non-leaching, non-toxic, non-flammable, non-injurious to asphalt, cement, carpet, tile, soil, or plant life. (A Material Safety Data Sheet (MSDS) is available for the product, on request.)

10. HAS THE FOSSIL ROCK ADSORBENT BEEN TESTED FOR EFFICIENCY? According to KriStar's supplier, Fossil Rock will adsorb approximately 1.92 gallons of liquid contaminant per cubic foot of Fossil Rock. Therefore, a typical 24' x 24" filter, which contains approximately .56 cubic feet of Fossil Rock, would adsorb approximately 1.08 gallons of liquid contaminant.

11. WHAT ARE THE MAINTENANCE REQUIREMENTS? WHAT IS THE USEFUL LIFE OF THE INSTALLED ADSORBENT? As with all products subject to the abuses of nature and mankind, the installed **Fossil Filter™** requires periodic inspection and all foreign objects (leaves, cans, cigarette butts, papers, etc.) removed. The area around the inlet should be swept on a regular basis. The installed Fossil Rock adsorbent should be inspected and replaced if the surface of the granules is more than 50% coated with contaminants and/or the unit has become clogged with silt or sediment (see #12). To insure efficiency, it is recommended that, as a minimum, the units be inspected at least three times per year (i.e. once before and twice during the rainy season). In areas subject to excessive debris, the inspections should be more frequent. (See #16 and #17 for discussion on available maintenance plans.) According to the supplier, the useful life of the installed Fossil Rock, under normal usage, is estimated to be about six months. Areas with heavy vehicle traffic or subject to petroleum hydrocarbon spillage may require more frequent changes.

12. WILL THE FOSSIL FILTER™ FUNCTION EFFECTIVELY IN AREAS SUBJECT TO HEAVY SILT, SEDIMENT OR DEBRIS? Yes, however, in such areas, use of a duel stage filter is recommended. This involves mounting a secondary filter just below the overflow lip of the primary filter. The primary (upper) unit captures silt, sediment and debris during its useful life. If it becomes clogged, the water will flow over the overflow and fall into the secondary (lower) stage and be filtered.

13. ARE THERE KNOWN "ACCEPTED" PRODUCTS CURRENTLY ON THE MARKET THAT FUNCTION AS EFFICIENTLY AS FOSSIL FILTER™ IN THE REMOVAL OF CONTAMINANTS FROM WATER RUNOFF? Until the creation of **Fossil Filter™**, the Best Available Technology (BAT) for removing petroleum hydrocarbons from water runoff included the use of underground large-capacity concrete oil/water separators. Compared to **Fossil Filter™**, they are less efficient and more difficult and more expensive to install and maintain. In addition, due to high construction costs, they are not generally suitable for post-construction (retrofit) projects.

14. WHAT IS THE COST PER FILTER UNIT OF FOSSIL ROCK ADSORBENT? One 24" x 24" **Fossil Filter™** contains approximately .56 cubic feet of adsorbent. One ten-pound bag of Fossil Rock (cost $30) contains 1.3 cubic feet of adsorbent material. Therefore, since one bag will fill two such filters, it costs about $15 to replace the adsorbent in one filter.

15. ONCE REMOVED FROM THE FOSSIL FILTER™, IS THE EXPOSED ADSORBENT CONSIDERED HAZARDOUS MATERIAL? HOW IS IT DISPOSED OF? Even though Fossil Rock is a non-leaching and environmentally friendly substance, once it has been exposed to contaminants, it technically becomes "Used Oil Adsorbent Material" with disposal requirements similar to those of oily rags. The method of handling contaminated substances varies with the jurisdiction so maintenance personnel should contact their local regulatory agency to ensure regulatory compliance.

NOTE: KriStar has both in-house and contract certified maintenance personnel (See #16 below) that are familiar with the complexities of the filter, the exchange of adsorbent and the disposal process. Use of their expertise lessens the chance of liability on the part of the landowner.

16. ARE FOSSIL FILTER™ INSTALLERS AVAILABLE? ARE MAINTENANCE PLANS AVAILABLE? Yes, on both counts. KriStar has formed a team of company-certified **Fossil Filter™** installers and maintenance personnel. (Call (800) 579-8819 for names.) KriStar has an in-house capability of performing what it calls "Full Circle

Service".

NOTE Some California cities are now requiring proof of a follow-on maintenance program before theywill issue a final clearance to a project.

17. WHO IS RESPONSIBLE FOR MAINTAINING THE INSTALLED FOSSIL FILTERS™? FOR PROPER DISPOSAL OF THE CONTAMINATED ADSORBENT?

NOTE. Federal, State and local Clean Water Act regulations and those of insurance carriers require that Storm Water Filtration Systems be maintained and serviced on a regular basis. The intent of the regulations is to insure that the systems efficiently filter petroleum hydrocarbons, chemicals, silt and other harmful pollutants from storm water runoff.

Once the filter is installed, it is the responsibility of the landowner to make sure that it continues to function. As to maintenance, the landowner has the choice of maintaining the installed filters with internal resources or, to avoid loss of manufacturer warranty, to use the services of a certified **Fossil Filter™** maintenance company. As the generator, the landowner is responsible for proper handling and disposal of the contaminated adsorbent. (See #15)

18. WHAT DOES A TYPICAL MAINTENANCE PLAN INCLUDE? WHAT DOES IT COST? KriStar's in-house plans are based on exposure to silt, sediment and debris and exposure to petroleum hydrocarbon contaminants. The following plans are per year:

Service Plan A: (Recommended minimum): Three (3) cleanings with one (1) change of filter sorbent.

Service Plan B: (Manufacturer recommended): Three (3) cleanings with two (2) changes of sorbent.

Service Plan C: (Special plan for heavy debris and pollutant loading): More than three (3) cleanings and as many changes of sorbent as necessary.

Each service will include removal of debris and broom cleaning around the inlet. The inlet grate will be removed, the filter structure inspected for damage and the installed sorbent inspected for remaining useful life. The sorbent will be replaced as per service plan. The area will be broom cleaned once more and the grate replaced. The contaminated adsorbent will be properly handled and disposed of. Subsequent to the service, the landowner and the city involved will be furnished certificates of service.

The cost is based on the type of plan, the number of filters installed at the site, travel expenses and other factors. A "ball park" cost for **Service Plan A** (three visits, one sorbent change and proper handling and disposal of the contaminated adsorbent) would be about $65 for each of the three visits plus travel adjusted for the number of the units on site.

19. HOW DO I GET MORE INFORMATION ON FOSSIL FILTER™? ON THE MAINTENANCE PLANS? Contact KriStar's national sales office in Cotati, California toll free (800) 579-8819, fax (707) 792-4669, e-mail at [illegible].

Copyright 1998, 1999 KriStar Enterprises, Inc. All Rights Reserved. This page was designed and is managed by A-Design Web Publishing & West County Net, comments?

Fossil Filter

Best Management Practices For Removal Of Petroleum Hydrocarbons From Storm Water Runoff Through The Use Of Catch Basin Filtration Systems

The Concept Of Storm Water Catch Basin Filtration:

Essentially, catch basin filtration is the placement of devices, which contain a filtering medium (a sorbent) just under the storm water system's inlet (catch basin) grate. The runoff flows into the inlet, through the filter where the target contaminants are removed, and then into the drainage system. The devices must be capable of effectively filtering the first flush of a rain event and provide an overflow capability sufficient to prevent the system from becoming clogged. The sorbent filter medium must be an inert blend of minerals that contains non-hazardous ingredients, as defined by the Federal EPA, OSHA and WHO (World Health Organization). Further, the medium should be non-leaching, contain no reactive chemicals, be non-carcinogenc, non-biodegradable, non-toxic, non-flammable, non-injurious to asphalt, cement, carpet, tile, soil, or plant life.

Contaminants:

The primary target contaminant is petroleum hydrocarbons, to include most, if not all, oil-based products generated by motor vehicles powered by fossil fuel or lubricated with any of the fossil fuel by-products. These include gasoline, oil, grease, some anti-freezes, and other such products plus other types of contaminants (i.e. heavy metals) that may become attached to the hydrocarbon.

Current Technology:

Of the catch basin filtration systems currently on the market that target petroleum hydrocarbons, Fossil Filter, a product of KriStar Enterprises, Inc. of Cotati, California, is the most prominent. The Fossil Filter introduced a concept that was unique enough to qualify for a U.S. patent. Prior to the introduction of Fossil Filter, the leading technology for separating oil from water runoff was large underground precast concrete oil/water separators. They were expensive to purchase and install and could be used only on new construction projects. Because they were underground (and out of sight), inspection was very difficult and maintenance was expensive. Consequently, they were usually forgotten and any contaminants collected were left in the units to be flushed back into the drainage system by some future rain event.

Fossil Filter, on the other hand, costs but a fraction of the concrete units to purchase and installation usually consists of removing the inlet grate, dropping the filter in place and replacing the grate. They can be used in both new and post-construction projects; visual inspection is simple; and maintenance can be performed usually in a matter of minutes.

Fossil Filter, for common size/shape inlets, is delivered as a one-piece "drop-in" unit. For unusual size/shapes the filter can be fabricated to fit the inlet. They are available for square, rectangular, round and curb or combination inlets as well as trench drains. According to the manufacturer, a device to fit most any situation is possible.

Device Construction:

The catch basin filtration system structure should be constructed so as to cause the water to flow through the unit's filter medium and be of a fit that prevents leakage around the filter. To prevent corrosion and the release of oxidized metals into the system, the device's construction materials should be of high-density polyethylene (HDPE), petroleum resistant fiberglass or stainless steel. The use of galvanized steel should not be allowed. The device should provide an overflow bypass area 'in its center with dimensions at least equal to 1/3 the inside dimensions of the catch basin.

Recommended Effectiveness:

Catch Basin Filtration Systems acceptable for installation should have, through appropriate laboratory or field testing, demonstrated a capability of removing petroleum hydrocarbons entering the inlet.

Applicability Of Devices To EPA's NPDES And SWPPP's:

The Federal EPA's NPDES program, designed to control the discharge of pollutants to waters of the United States. cites a definition of oil/water separator as "A device installed usually at the entrance to a drain, which removes oil and grease from water flows entering the drain.

Catch Basin Filtration Systems acceptable for installation in petroleum hydrocarbon generating areas should fit the federal EPA's definition of oil/water separator (above). Fossil Filter meets the EPA description plus it meets the EPA mandate of BAT (Best Available Technology) while being "economically feasible". Based on the foregoing, Fossil Filter is suitable for inclusion as a BNT in local SWPPP's.

Recommended Uses:

Catch Basin Filtration Systems should be required for all locations where petroleum hydrocarbons are a major source of pollution to storm water runoff and the water can be directed into a drainage inlet. Employee and customer parking lots, toll gates, service stations, aircraft and boat refueling areas are prime examples of such locations. The systems should be required for new construction and whenever a permit is issued to renovate or remodel an existing location.

Inspection and Maintenance Procedures:

Each inspection of the installed filtration systems should include a sweeping of the area surrounding the inlet, removal of the inlet grate, removal of trash and debris on top of the filter and a visual inspection of the filter and its installed material. If the filter media is covered with silt, the media containers should be removed from the structure, the silt removed and the granules "stirred up". If the normally white granules appear to be more than 50% coated with a dark substance, the media should be replaced with new material. The media containers should then be re-installed, the inlet grate replaced and another broom cleanup completed. The exposed filter media should be placed in a DOT approved drum and disposed of in accordance with local agency requirements.

Follow-On Maintenance:

Because of past abuses of installed storm water treatment devices, some governmental agencies within California that accept Fossil Filter as a BMP for storm water runoff are now requiring proof of a follow-on maintenance program. It is recommended that all agencies require proof of either a contractor maintenance program or that the landowner certifies that they will provide maintenance.

KriStar Enterprises, the owners of Fossil Filter, provides a comprehensive maintenance program that not only provides for maintenance of storm water filtration systems (to include other than Fossil Filter) but notifies the owner and the agency involved in writing when maintenance has been performed.

Limitations:

The efficiency of any filtration system will be in direct proportion to the caliber of its maintenance program. A lack of care can be a limitation for any storm water filtration system. Other system limitations must include unsuitable installation sites. The makers of Fossil Filter discourage installation of their product in areas that are subject to heavy silting, excessive tree leaves, trash or debris.

Recommendations:

1.Catch Basin Filtration Systems such a Fossil Filter are recommended as a BMP for preventing pollution of storm water runoff by petroleum hydrocarbons.

2. Recommend that all construction of new, and retrofit of existing, areas subject to generation of petroleum hydrocarbons be surveyed as potential sites for installation of Catch Basin Filtration Systems

---

Copyright 1998, 1999 KriStar Enterprises, Inc. All Rights Reserved. This page was designed and is managed by A.D.esign Web Publishing & West County Net. comments?

Fossil Filter

Manufacturer's Representatives

Installation/Maintenance Representatives

Distributors

Manufacturer's Representatives

Los Angeles & Las Vegas Areas
Maintenance Products, Inc.
19502 Ranch Lane #106
Huntington Beach, CA 92648
(714) 374-9599 * (800) 950-3002
fax: (714) 536-1444
contact: Chuck McKinley

Idaho State
Devin Beach
626 W. Pine Ave.
Meridian, ID 83642
(208) 884-5585
fax: (208) 884-5585
contact: Devin Beach

Washington State
Bob Manthey
PO Box 104
Chelan, WA 98816
(509) 687-2103
fax: (509) 682-9103
contact: Bob Manthey

Hawaii State
Lloyd & Associates
PO Box 627
Haleiwa, HI 96712
(808) 637-5991
fax: (509) 682-9103
contact: George Lloyd

back to top

Installation/Maintenance Representatives

SMC Construction
(Contra Costa & Solano Counties)
402 La Sonoma Way
Alamo, CA 94507
(510) 838-7274
contact: Steve Wintch

Performance Piping Company
(Sacramento & El Dorado Counties)
3225-A Monier Circle
Rancho Cordova, CA 95742
(916) 635-4261 fax: (916) 635-4397
contact: Mike Holman

Oak Grove Construction
(Marin, Napa, & Sonoma Counties)
3354 Regional Parkway
Santa Rosa, CA 95403
(707) 525-1910 fax: (707) 525-0592
contact: Roger Hermsmyer

Pantera Construction
(Marin, Napa, & Sonoma Counties)
206 Wilson St.
Santa Rosa, CA 95401
(707) 318-3456 fax: (707) 525-3750
contact: Sandy Dortch or Mike Dortch

Sonoma Fabricators
(Butte, Glenn, Lassen, Modoc, Nevada, Placer, Sierra, Siskiyou, Plumas, Shasta, Tehema, Yolo, Yuba & Sutter Counties)
7936 Charlene Way
Citrus Heights, CA 95610
(916) 969-8111 fax: (916) 722-1053
contact: Jim Holzer

Hydro Filtration Dynamics
(Los Angeles, Ventura & San Luis Obispo Counties)
338 E. Surfside Dr.
Pt. Hueneme, CA 93041
(805) 986-4724 or (805) 312-1563
fax: (805) 986-4383
contact: Darcy Beach

back to top

Distributors

Oregon
Environmental Storm Drains, Inc.
945 North 28th Street
Springfield, OR 97477
(541) 746-3673 fax: (541) 746-4002
contact: Pete Kilger

Pennsylvania & New Jersey
Modern Concrete
PO Box 339
Spring City, PA 19475-0038
(610) 469-6395 fax: (610) 469-8725
contact: George Reisner

Illinois & Missouri
McCann Environmental
8709 State Route 159
Dorsey, IL 62021
(618) 585-3215 fax: (618) 377-7746
contact: Mark Melvin

Florida
Du Moore Systems
8704 Hwy. 301 North
Tampa, FL 33637-6768
(813) 988-0397 fax: (813) 980-6753
contact: David Hosley

Georgia, North/South Carolina, Louisiana, Alabama & Mississippi
Foothill Specialties, Inc.
1925 N. Main Ave.
Newton, NC 28658
(828) 464-9944 fax: (828) 464-4952
contact: Ron or Stephanie Setzer

New York
Knight Treatment Systems
281 County Route 51A
Osewego, NY
(315) 343-2454 fax: (315) 343-6114
contact: Mark Noga

New Hampshire & Massachusetts
Del R.Gilbert & Son Block Co.
427 Province Rd.
Laconia, NH 03246
(800) 464-1353 fax: (603) 524-6859
contact: Jim Bordeau or Brian Gilbert

British Columbia, Canada
Urban Storm Drain Filtration
8260 Delta Line Rd.
Custer, WA 98240
(360) 366-7219
contact: Jay Gottfried

Petroleum Market
Western Fiberglass
1555 Copperhill Parkway
Santa Rosa, CA 95403
(707) 523-2050 fax: (707) 523-2046
contact: Frank or Sue Lillo

back to top

Copyright 1998, 1999 KriStar Enterprises, Inc. All Rights Reserved. This page was designed and is managed by A-Design Web Publishing & West County Net, comments?