Caltrans Division of Equipment

Equipment Quality Standards

Electrical Standards

January 14, 2004

Caltrans Division of Equipment
Caltrans Improves Mobility Across California
34 th & Stockton Blvd.
Sacramento , CA 95816-0048
http://www.dot.ca.gov/hq/eqsc/index.htm

TABLE OF CONTENTS

i References.....1

ii Terminolgy and Outside Environmental Conditions.....2

1 WIRE, CABLES & HARNESSES 4
1.1 Wire & Cable Harness Requirements.....4
1.2 DC Wiring.....4
1.3 AC Wiring 120 or 120/240 volt.....15
2 CRIMPS & TERMINALS 19
2.1 References 19
2.2 Crimps & Tools.....19
2.3 Protective Measures.....20
2.4 Battery Terminals 20
2.5 Connectors 21
2.6 Number of Lugs per Terminal Board 21
3 OVERLOAD PROTECTION (DC and AC CIRCUITS) 22
3.1 Location.....22
3.2 Fuses.....22
3.3 Re-settable Circuit Protectors.....22
3.4 Conductor Carrying Capacity 22
3.5 Fusible Link 23
3.6 Voltage Rating.....23
3.7 Storage Battery Main Fuse.....23
3.8 Current Overload Protection.....23
3.9 Power Source Branch Fuse.....23
3.10 General Circuit Breakers 24
3.11 Manual operation.....25
3.12 Position Identification.....25
4 BATTERIES 25
4.1 General.....25
4.2 Liquid Batteries.....26
4.3 Deep Cycle Batteries.....27
5 QUALITY.....27
5.1 Workmanship.....27
5.2 Accessibility.....28
5.3 Substitutability 29
5.4 Interchangeability 30
5.5 Markings.....30
6 SWITCHES 31
7 ELECTROMAGNETIC INTERFERENCE 32
8 RELAYS & SOLENOIDS.....33
8.1 Circuit Transient Surges, Arc Suppression & Voltage Surge Protection 33
8.2 Continuous Current 33
8.3 Coil Energizing Voltage 33
8.4 Coil Dropout Voltage 33
8.5 Shock-Vibration 33

9 AC GENERATORS & INVERTERS....34
9.1 AC Generators....34
9.2 Inverters....34
10 PROTECTION FROM WET & CORROSIVE ENVIRONMENTS....35
10.1 Enclosures....35
10.2 Moisture Pockets....35
10.3 Corrosion Protection....35
11 ADHESIVES & SEALANTS....36
11.1 Adhesives....36
11.2 Sealants....36
12 SAFETY....36
12.1 General Safety Provisions....37
12.2 Temperature....37
12.3 Electrical....37
12.4 Mechanical....38
12.5 Equipment Safety Markings....38
12.6 Flammability....39
12.7 Ignition Protection....39
13 CONTROLS and INDICATORS....39
13.1 General Controls:....39
13.2 Operating Controls....40
13.3 Adjustment Controls....40
13.4 Stops....40
13.5 Locking Devices....40
13.6 Non-turn devices....40
13.7 Control knobs and handles....40
13.8 Stability....41
13.9 Arrangement and location....41
13.10 Mechanical operation....41
13.11 Shafts and couplings....41
13.12 Tuning Dial Mechanisms....41
14 DIAGNOSTICS & TEST PROVISIONS....42
14.1 Built-In-Test Devices....42
14.2 Test Provisions....42
14.3 Test Cables....42
14.4 External Test Points....42
14.5 Failure Effect....42
15 ELECTRONICS....43
15.1 Environmental Conditions....43
15.2 Electronic Cooling....43
16 PRINTED CIRCUIT BOARDS....44
16.1 General PC Board Requirements....44
16.2 Electronic Equipment Assembly Requirements....44
16.3 Design/Process Checklist for Vehicle Electronics (SAE J1938)....45
16.4 Environmental Practices for Electronics Design (SAE J1211)....45
16.5 Environmental Practices for Electronics Design (SAE J1455)....48
17 MOBILE RADIO TELEPHONE....52

References

Referenced standards reflect the minimum acceptable requirements. If there are questions on interpretation of this document please call Caltrans, Division of Equipment, Quality Assurance Branch at 916-227-9709.

- American Trucking Association "Technology and Maintenance Council Recommended Engineering Practices Manual 2000-2001" and "Recommended Practices Manual 2002 Supplement"
- ANSI Z 535.1 Safety Color Code
- ANSI Z 535.3 Criteria for Safety Symbols
- ANSI Z 535.4 Product Safety Label
- ANSI Z 535.5 Accident Prevention Tags
- ANSI/IPC-A-610 "Acceptability of Electronic Assemblies" and J-STD-001B
- ASME-Y14.38M Abbreviations for Use on Drawings and in Specifications, Standards, and Technical Documents
- EN 50082 Electromagnetic Compatibility – Generic Immunity Standard
- EN 55022 Limits and Methods of Measurement of Radio Interference Characteristics of Information Technology Equipment
- FCC 47 CFR Parts 2 and 15
- FMCSR Title 49 section 393.30 Federal Motor Carrier Safety Regulations -- Battery Installation
- FMCSR Title 49 section # 393.31 Overload protection devices.
- Ingress Protection (IP) as stated in IEC Standard 60529
- IP65 Protected Against Water Jets From All Directions
- IP67 Protected Against the Effects of Temporary Immersion in Water
- IPC-A-600 "Acceptability of Printed Boards"
- IPC-A-620 Requirements and Acceptance for Cable and Wire Harness Assemblies
- IPC-CC-830 "Qualification and Performance of Electrical Insulating Compound for Printed Wiring Assemblies"
- IPC-CM-770 "Component Mounting Guidelines for Printed Boards"

- IPC-SM-780 "Component Packaging and Interconnecting with Emphasis on Surface Mounting".
- National Electric Code Article 551 Recreational Vehicles
- National Electric Code Article 455 Generators
- National Electric Code (NEC) 250-6 (Portable and Vehicle Mounted Generators)
- National Electrical Code (NEC) 370 (Outlet, Device, Pull and Junction Boxes, Conduit Bodies and Fittings)
- National Electric Code (NEC) 210-7 (Receptacles and Cord Conductors)
- SAE 1938 Design/Process Checklist for Vehicle Electronic Systems
- SAE J1113-13 Electromagnetic Compatibility Measurement Procedure for Vehicle Components
- SAE J1127 Battery Cable
- SAE J1128 Low Tension Primary Cable
- SAE J1211 Recommended Environmental Practices for Electronic Equipment Design
- SAE J1455 Joint SAE/TMC Recommended Environmental Practices for Electronic Equipment Design (Heavy-Duty Trucks)
- SAE J400 Test for Chip Resistance of Surface Coatings
- SAE J858a Electrical Terminals – Blade Type
- Boats and aquatic craft used by Caltrans shall meet the A.B.Y.C "Standards and Technical Information Reports for Small Craft"

Reference Web links:

- Global Engineering Documents
- Electronic Interconnection Industry Association (IPC)
- American National Standards Institute (ANSI)
- American Boat and Yacht Council, Inc.
- Society of Automotive Engineers (SAE)
- U.S. Department of Transportation, Federal Motor Vehicle Safety Standards (FMVSS)
- Federal Motor Carrier Safety Administration
- Federal Communications Commission (FCC)
- American Society of Mechanical Engineers (ASME)
- International Electrotechnical Commission (IEC)
- Explanition of IP ratings (PDF)
- Molex Reference 1 on Proper Crimps
- Molex Reference 2 on Proper Crimps (PDF)
- National Electric Code

ii. Terminolgy and Outside Environmental Conditions

IP65 Degree of Protection

Dust-tight: No ingress of dust. Protected against water jets: Water projected in jets against the enclosure from any direction shall have no harmful effects.

IP67 Degree of Protection

Dust-tight: No ingress of dust. Protected against the effects of temporary immersion in water: Ingress of water in quantities causing harmful effects shall not be possible when the enclosure is immersed in water.

Exposed to Outside Environment

Any electronic component, part, wire, cable, or related device that is physically located outside the cab of a vehicle is potentially exposed to all outside environmental conditions.

Outside Environmental Conditions

Common outside environmental conditions for the State of California:

A	Elevation from sea level, in feet	-300 to +10,000
B	Wind speed, any direction	0 to 100 mph
C	Temperature, summer (outdoor air temperature) (Ground surface can attain temperatures of 30°to 60° F higher than that of the free air).	85° to 110° F
	Temperature winter (outdoor air temperature)	-2° to 21° F
D	Solar radiation, summer	0 to 1,120 W/m²
	Solar radiation, winter	Negligible
E	Relative humidity, summer	44% to 14%
	Relative humidity, winter	100%
F	Condensation will occur on equipment due to temperature changes	
G	Rain, hail, snow, ice loading	
H	Dust, sand, gravel	
I	Coastal region corrosive fog and sea spray	
J	Steam cleaning, pressure washing	

Environmental Stress Generation Mechanisms

Induced environmental stress generation mechanisms include:

- Road shock (large bumps / pot holes)
- Road vibration (random)

- Handling shock (dropping / overturning)

1. Wire, Cables and Harnesses

1.1 Wire & Cable Harness Requirements

Before starting any wiring work for Caltrans, Division of Equipment, it is recommended that prospective vendors refer to the most recent version of IPC-A-620 (Class 2). "Requirements and Acceptance for Cable and Wire Harness Assemblies". This document will be used by Caltrans inspectors as part of quality assurance acceptance inspections.

1.2 DC Wiring

1.2.1 DC System Grounding

The ground wire return system is preferred.

1. If a chassis ground is used, then
   1. The ground connection shall be designed and installed to remain corrosion free for the life of the equipment. Ground connection to an electrically conductive chassis or frame shall be mechanically secured to a spot welded stud, or a screw with flat washer, lock-washer and nut (nylock nut is acceptable in lieu of nut and lock washer) or tapped hole. The metal ground connection shall be free of paint and, after assembly, shall be covered with a corrosion resistant film (e.g., liquid tape electrical by Plastic Dip, 3M under body coating, etc.) The use of a toothed lock washer to cut through a coating is not acceptable.

   2. The current carrying capacity of the connection between battery and frame shall be adequate for the anticipated loads.
2. In a frame ground (chassis ground) return system, the maximum current allowed through the frame shall be the manufacturer's recommended limit for the vehicle (e.g., Ford Body Builder maximum is 30 amps). If the current is greater than the manufacturer's recommended limit, then a two wire configuration (one wire for positive and one wire for negative) shall be used. If possible, connections directly to the battery post should be avoided. A buss system is preferred. (Connections directly to the battery are difficult to keep corrosion free.) It is preferred to make this connection at the starter motor relay’s positive terminal, not at the battery’s positive terminal. A separate buss system shall be set up close to the battery. See following drawing "BUSS SYSTEM". (This paragraph does not apply to factory-installed, vehicle starter motors).

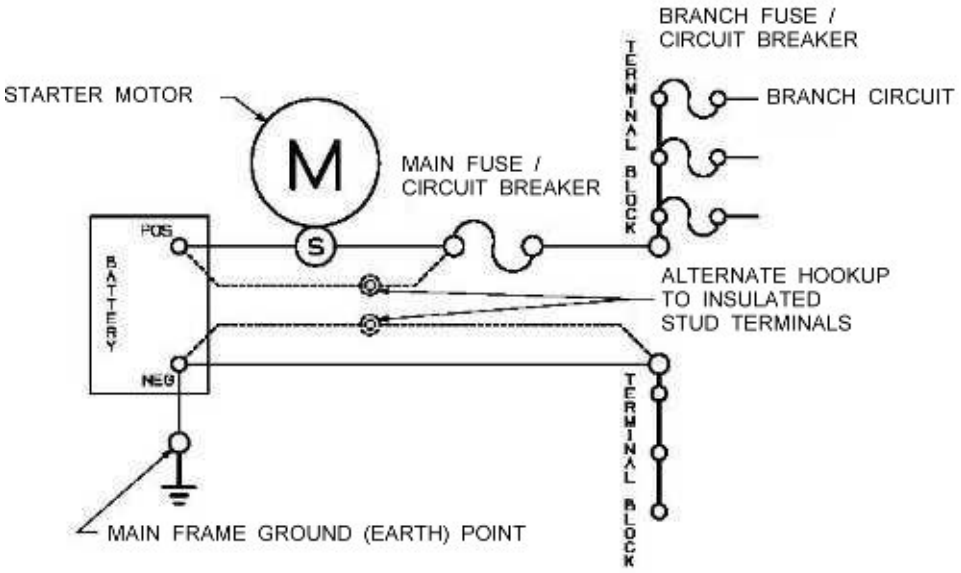

BUSS SYSTEM

1.2.2 Ground Potential

1. Antenna and transmission line terminals shall be at ground potential, except for radio frequency (RF) energy on their external surfaces. Installer shall follow antenna manufacturer's recommendations.
2. All outer metal cases of electrical components shall be at ground potential or covered by an external casing made of insulating material. The external casing shall enclose the original case on all sides except the terminal sides.
3. A point on the electrically conductive chassis or equipment frame shall serve as the common tie point for the power (earth) ground. Installer shall use only those ground (earth) points recommended by the vehicle or equipment manufacturer.

1.2.3 Electrical Items Mounted to Hinged Panels and Doors

Hinges or slides are not considered adequate grounding paths, therefore doors, panels, etc., with hinges or slides shall be grounded by use of a flexible ground strap.

1.2.4 Wire Stripping

There shall be no evidence of burns, abrading, or pinch marks in the insulation that could cause short circuits or leakage. All wire to be stripped of insulation shall have smooth cuts and

the wire conductor free of nicks, scrapes or cuts, per Class 2 requirements described in IPC-A620.

1.2.5 Cable Splicing in a Harness

1. An uninterrupted wire is preferable to a spliced wire.
2. Splices in wires inside the cab or inside sealed enclosures shall be spliced with nylon insulated, butt splices. Double crimp type is preferred. It is acceptable to use step down nylon or vinyl insulated butt splices when connecting multiple wires (two in, one out) or wires of different gauge sizes. Also allowed are, nylon insulated, bell or closed end connector type.
3. Splices exposed to the outside environment shall be completely sealed from wet conditions. There are many ways to seal a splice exposed to wet conditions. Butt splices are the preferred splice. Bare metal barrel or nylon insulated, double crimp type, can be sealed with adhesive lined heat shrink tubing (e.g., ES 1000 by Raychem, TES by 3M). There are also special butt connectors that have the adhesive lined heat shrink tubing already installed. Other sealed splices require written approval of Caltrans, Quality Assurance (916-227-9709). Electrical tape is not acceptable as a splice seal for locations outside a cab enclosure.
4. Splices are not acceptable in areas of hard bend or flexing.

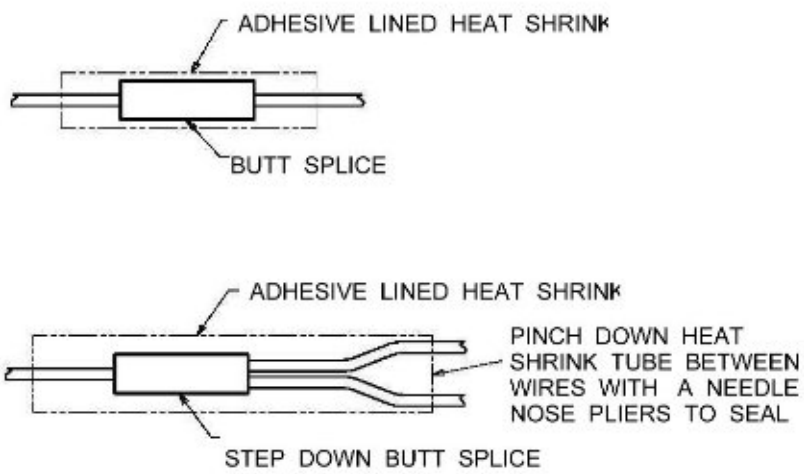

SPLICE DETAILS

5. There shall be no splicing or cutting into the engine or transmission control system wires (e.g., engine run signal, speed, etc.) without prior written approval of Caltrans Quality Assurance (916-227-9709).

1.2.6 Through-Hole Protection

1. Whenever wires are run through holes in partitions, shields, and the like, less than 1/8" thickness, the holes shall be equipped with grommet. Panels 1/8" or more in thickness shall have grommets or shall have the hole edges rounded to a minimum radius 1/32" and abrasion protective covering on wires (e.g., loom).
2. Where wires and cables penetrate an enclosure, or are exposed to the outside environment, insulating weatherproof (IP65) or watertight (IP67) bulkhead fitting shall be used.
3. Wire or other penetrations of a cab shall only be inserted into the cab from below and shall meet the requirements of IP65 or IP67. Cable access or mounting holes through the top or sides of a cab are not acceptable, except with prior written approval from Caltrans Quality Assurance 916-227-9709.

1.2.7 Cable and Wire Support

Adhesive backed tie holders are not acceptable in any application.

1. **Cab Exterior:**
   Wire and cable shall be properly supported at least every 18" and secured with insulated metal loop clamps to prevent undue stress on the conductors and terminals and undue change in position of the wire or cable during and after subjection of the equipment to specified service conditions.

2. **Cab Interior:**
   Only insulated metal loop clamps or screw mounted wrapping and tying devices are acceptable.

1.2.8 Cable Ties

Nylon cable ties may be used only for bundling of multiple conductor cables and wiring. When used, nylon cable ties shall be trimmed flush. Cable ties shall not be used as a means of support, except for interior, under dash locations where loop clamps cannot be installed. If used outdoors, then black UV stabilized nylon cable ties shall be used. It is permissible to use cable ties to tie wires to existing wire runs on rigid frame members. Cable ties shall be of adequate size to support the harness load.

1.2.9 Wire Bend Radius

The bend radius of wire and cable shall not be less than five (5) times the cable or wire diameter to avoid establishing a permanent set in the cable.

1.2.10 Sleeving

1. Where corrugated loom is employed, provisions shall be made for the removal of any wire that may become faulty. (e.g., a split in the loom).
2. Flexible plastic sleeving (e.g., loom) for use in the cab shall be black polyethylene (80 ° C) minimum and for under hood or under body shall be black nylon (120 ° C) minimum. All wire exposed to the outside environment, road damage, splashing, spray or other wet conditions shall be run in loom.
3. Flexible plastic sleeving shall be used on cables subject to flexing, such as panel door cables. The sleeving shall be secured under cable clamps at each end, and the cable shall be formed and secured so that the cable shall not be subject to abrasion in its normal flexing motion. In cases where abrasion cannot be avoided, additional protection (e.g., thicker walled loom) shall be provided. Wiring to parts on a hinged door shall be in a single cable if possible, arranged to flex without being damaged when the door is opened and closed.

1.2.11 Slack

Wires and cables shall be as short as practicable, except that sufficient slack shall be provided to:

1. Prevent undue stress on cable , wires and connections, including connections to resiliently supported parts;
2. Enable parts to be removed and replaced during servicing without disconnecting other parts;
3. Facilitate field repair of broken or cut wires;
4. Units which are difficult to connect when mounted, shall be capable of movement to a more convenient position for connecting and disconnecting cables.

1.2.12 Wire Routing

All wire routing shall conform to the following:

1. Shall be shielded from or routed away from heat sources.
2. Shall be protected or routed away from environmental exposure.
3. Shall not be placed under tension.
4. Shall be free and clear of any moving parts.
5. Wiring harness covering shall protect the harness in the operating environment and provide protection from road damage.
6. All mateable connectors shall be accessible during maintenance.
7. Cable and harnesses shall be routed along rigid sections of the cab or chassis where possible.
8. Wires shall be protected or secured away from sharp edges, including screw threads and from any other feature that might cut the insulation.
9. Wiring to components in exposed locations shall have a drip loop to prevent moisture from running up the wire.

10. The harness and cable ties, straps, etc., shall be neat in appearance, uniformly applied, and positioned to retain critical form factors and breakout locations. The containment means (lacing, ties, tie-down straps, etc.) shall not cause the wire or cable insulation to deform so that performance characteristics are adversely affected.

1.2.13 Hook Up Wire and Battery Cable for DC

1. Hook up wire for cab interior locations (passenger compartment), shall be automotive primary wire Type GPT or HDT meeting SAE J1128 80 ° C and shall be routed away from high temperature areas.
2. Hook up wire for under hood and under body locations, shall be automotive primary wire Type SXL, GXL, TLX 125 °C meeting SAE J1128. If SAE wire is used, an invoice or other certificate of compliance from the wire supplier or wire manufacturer shall be provided.
3. Minimum accepted wire for battery type cable shall conform to SAE J1127, Type SGX or STX 125 °C and Type SGT 105 °C .
4. Also allowed for hook up wire for interior or exterior are:
    - UL 1015 (also known as 1015/1230) 18 gauge to 10 gauge, stranded conductors and tinned, 105 °C
    - UL 1028/1231 – 1283/1231 for 8 gauge to 2 gauge stranded conductors and tinned,105 °C, rated 600V
    - Marine rated primary wire, meeting UL 1426 for boat cable, stranded conductors and tinned, 105°C, 600V, type 3.
5. Applications in high temperature areas shall use wire designed for high temperature, UL 3271, UL 3284 or UL 3289.
6. Electrical cable size shall be no smaller than 18 gauge (AWG). Electronics cable size shall be no smaller than 22 gauge (AWG).
7. Cables with fine stranding shall be used in areas subject to flex and vibration (e.g., Type 3 marine cable or better).
8. All conductors shall be stranded copper wire. If tinned, bonded tinned, bunched tinned or tinned overcoat is not acceptable.

1.2.14 DC Conductor Sizes

Any voltage drop not specified shall not lower the terminal voltage at the point of consumption to below 95% of battery voltage.

12 Volts Wire Sizes (Gauge) 3% Drop for Radios **Total Wire Length in Feet**													
		10	**15**	**20**	**25**	**30**	**40**	**50**	**60**	**70**	**80**	**90**	**100**
Amp	**5**	18	16	14	12	12	10	10	10	8	8	8	6

	10	14	12	10	10	10	8	6	6	6	6	4	4
	15	12	10	10	8	8	6	6	6	4	4	2	2
	20	10	10	8	6	6	6	4	4	2	2	2	2
	25	10	8	6	6	6	4	4	2	2	2	1	1
	30	10	8	6	6	4	4	2	2	1	1	0	0
	40	8	6	6	4	4	2	2	1	0	0	2/0	2/0
	50	6	6	4	4	2	2	1	0	2/0	2/0	3/0	3/0
	60	6	4	4	2	2	1	0	2/0	3/0	3/0	4/0	4/0
	70	6	4	2	2	1	0	2/0	3/0	3/0	4/0	4/0	
	80	6	4	2	2	1	0	3/0	3/0	4/0	4/0		
	90	4	2	2	1	0	2/0	3/0	4/0	4/0			
	100	4	2	2	1	0	2/0	3/0	4/0				

24 Volts Wire Sizes (Gauge) 3 % Drop for Radios **Total Wire Length in Feet**													
		10	**15**	**20**	**25**	**30**	**40**	**50**	**60**	**70**	**80**	**90**	**100**
Amp	**5**	18	18	18	16	16	14	12	12	12	10	10	10
	10	18	16	14	12	12	10	10	10	8	8	8	6
	15	16	14	12	12	10	10	8	8	6	6	6	6
	20	14	12	10	10	10	8	6	6	6	6	4	4
	25	12	12	10	10	8	6	6	6	4	4	4	4
	30	12	10	10	8	8	6	6	4	4	4	2	2
	40	10	10	8	6	6	6	4	4	2	2	2	2
	50	10	8	6	6	6	4	4	2	2	2	1	1
	60	10	8	6	6	4	4	2	2	1	1	0	0
	70	8	6	6	4	4	2	2	1	1	0	0	2/0
	80	8	6	6	4	4	2	2	1	0	0	2/0	2/0
	90	8	6	4	4	2	2	1	0	0	2/0	2/0	3/0
	100	6	6	4	4	2	2	1	0	2/0	2/0	3/0	3/0

12 Volts Wire Sizes (Gauge) 10 % Drop for Lights Total Wire Length in Feet													
		10	**15**	**20**	**25**	**30**	**40**	**50**	**60**	**70**	**80**	**90**	**100**
Amp	**5**	18	18	18	18	18	16	16	14	14	14	12	12
	10	18	18	16	16	14	14	12	12	10	10	10	10
	15	18	16	14	14	12	12	10	10	8	8	8	8
	20	16	14	14	12	12	10	10	8	8	8	6	6
	25	16	14	12	12	10	10	8	8	6	6	6	6
	30	14	12	12	10	10	8	8	6	6	6	6	4
	40	14	12	10	10	8	8	6	6	6	4	4	4
	50	12	10	10	8	8	6	6	4	4	4	2	2
	60	12	10	8	8	6	6	4	4	2	2	2	2
	70	10	8	8	6	6	6	4	2	2	2	2	1
	80	10	8	8	6	6	4	4	2	2	2	1	1
	90	10	8	6	6	6	4	2	2	2	1	1	0
	100	10	8	6	6	4	4	2	2	1	1	0	0
	150	8	8	4	4	2	2	1	0	0	2/0	2/0	2/0
	200	6	6	4	4	2	1	2/0	2/0	2/0	4/0	4/0	4/0

24 Volts Wire Sizes (Gauge) 10 % Drop for Lights Total Wire Length in Feet													
		10	**15**	**20**	**25**	**30**	**40**	**50**	**60**	**70**	**80**	**90**	**100**
Amp	**5**	18	18	18	18	18	18	18	18	16	16	16	16
	10	18	18	18	18	18	16	16	14	14	14	12	12
	15	18	18	18	16	16	14	14	12	12	12	10	10
	20	18	18	16	16	14	14	12	12	10	10	10	10
	25	18	16	16	14	14	12	12	10	10	10	8	8
	30	18	16	14	14	12	12	10	10	8	8	8	8

	40	16	14	14	12	12	10	10	8	8	8	6	6
	50	16	14	12	12	10	10	8	8	6	6	6	6
	60	14	12	12	10	10	8	8	6	6	6	6	4
	70	14	12	10	10	8	8	6	6	6	6	4	4
	80	14	12	10	10	8	8	6	6	6	4	4	4
	90	12	10	10	8	8	6	6	6	4	4	4	2
	100	12	10	10	8	8	6	6	4	4	4	2	2

1.2.15 DC Wiring Color Codes

NOTE – It is desirable for the wire of any one circuit to be of uniform color code throughout the circuit regardless of the number of connections. A circuit is assumed to be continuous until it can be interrupted by a relay or switch contacts, or when it reaches a load (such as bulbs, motors, etc.). Fusible links may differ in color from the circuits they are protecting, as it could be advantageous to identify fusible link wire gauge size by insulation color.

Caltrans standard wire color and size are specified by type of use in the following "Wire Identification" table. (Note: This is the minimum wire gauge size; actual size may differ due to circuit length. Refer to wire gauge selection chart)

WIRE IDENTIFICATION	
18 GAUGE	
BLU	VIT SPEED INPUT
BLK	HOUR METER, PTO LIGHT
RED	GENERATOR / WELDER DASH LAMP
ORG	FUEL GAUGE (AUX), WINCH SOLENOID
WHT	GROUND, MAGNETO GROUND
16 GAUGE	
BLK	DOME LIGHT, VOLTMETER
BRN	FUEL PUMP SOLENOID
RED	AUXILIARY ENGINE DASH LAMP, VOLTMETER
GRN	AIR HITCH, BED-UP, BOOM NOT SEATED, DASH WARNING LAMPS, FAN, HEATED MIRROR, OUTRIGGER LAMP

BLU	ACCESSORY SOLENOID, MASTER SWITCH, SPOT LAMP, PTO HYDRAULIC VALVE
WHT	GROUND, AUXILIARY ENGINE KILL
GRN+/BLK-	BED-UP LAMP, BOOM NOT SEATED LAMP, HEATED MIRRORS, OUTRIGGER DOWN, TAILGATE SWITCH
BLK+/WHT-	OUTRIGGER SLIDE OUT
14 GAUGE	
BLK	BACK-UP LIGHT, WING PLOW LAMP, WORK LAMP, BACKUP ALARM
BRN	ACCELERATION SOLENOID, FUEL PUMP, HEATER FAN, DRYER (AIR), TAIL LIGHTS
RED	ROTATING AMBER, WATER PUMP
ORG	ATTENUATOR HOLDING VALVE, BED UP/DOWN, HYD. PUMP
YEL	LEFT TURN
GRN	AMBER FLASHER, RIGHT TURN
BLU	HYDRAULIC TOOL CIRCUIT, SPREADER
WHT	GROUND
RED+/BLK-	LIGHT DUTY ACTUATOR, ROTATING LIGHT
YEL/GRN	AMBER FLASHERS
YEL/BRN/BLK	LEFT REAR LIGHTS(utility body), ELECTRIC BED CONTROL
GRN/BRN/BLK	RIGHT REAR LIGHTS(utility body), WINCH
12 GAUGE	
BLK	TRAILER BRAKE, PLOW LIGHT (TRUCK LO)
BRN	TAIL & MARKER LIGHTS
RED	12v AIR COMPRESSOR, PLOW LIGHT (PLOW HI)
YEL	LEFT TURN LIGHT, PLOW LIGHT (FEED HI)
GRN	RIGHT TURN LIGHT, PLOW LIGHT (PLOW LO)
BLU	TRAILER BRAKE, PLOW LIGHT (FEED LO)
WHT	GROUND, PLOW LIGHT (TRUCK HI)
10 GAUGE	
RED	FUSE BLOCK FEED

WHT	GROUND
BLK/WHT	ACTUATOR HEAVY DUTY

1.2.16 Seven-Pin Trailer Connector

Caltrans uses the SAE J560 standard plug connector for truck-trailer connections, except that the wiring configuration is changed per the following sketch and table (e.g., Cole Hersee 7 Pole Socket #12310 w/Boot #81356 and Plug #12311).

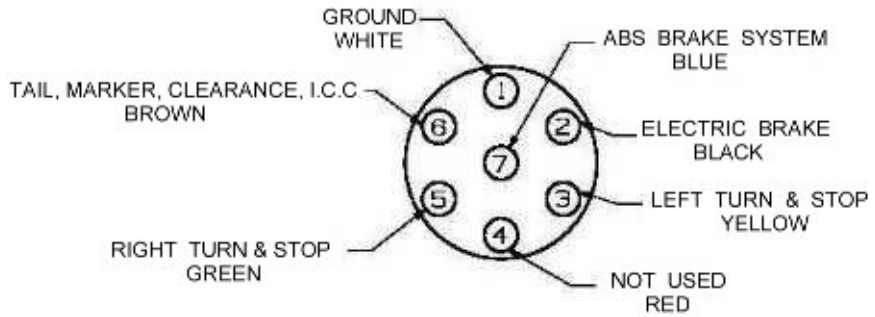

CALTRANS SEVEN CONDUCTOR ELECTRICAL CONNECTOR FOR TRUCK-TRAILER JUMPER CABLE

COMPARISON OF SAE J560 SEVEN CONDUCTOR ELECTRICAL CONNECTOR WITH CalTrans			
Conductor Identification Terminal Number	Conductor Identification Wire Color	SAE J560 Lamp & Signal Circuits	**Caltrans Configuration**
1	White	Ground return to towing vehicle	Ground
2	Black	Clearance, side marker, and identification lamps	Electric Brake
3	Yellow	Left turn signal and hazard lamps	Left Turn and Stop
4	Red	Stop lamps and antilock devices	Not Used
5	Green	Right turn signal and hazard lamps	Right Turn and Stop
6	Brown	Tail and license plate lamps	Tail, Marker, Clearance, ICC

7	Blue	Auxiliary	ABS Brake System

1.3 AC Wiring 120 or 120/240 Volt

If there is a difference between this Caltrans Division of Equipment Electric Standard and the National Electric Code (NEC), then the Caltrans Division of Equipment Electric Standard takes precedence.

1.3.1 AC Hook Up Wire and Cable

1. One of the following hook up wires shall be used for AC applications:
    - UL Type THHN 90 °C, stranded conductor
    - UL 1015 (also known as 1015/1230),18 gauge to10 gauge, stranded conductors, tinned, 105 Â°C, rated 600 V
    - UL 1028/1231 – 1283/1232 for 8 gauge to 2 gauge, stranded conductors, tinned, 105 Â°C, rated 600 V
    - Marine rated hook up wire, meeting UL 1426 for boat cable, stranded conductors and tinned, 105 Â°C, 600 V, Type 3
2. Applications in high temperature areas shall use wire designed for high temperature, UL 3271 or UL 3289.
3. AC wire colors shall conform to the following code:

AC Wire Color Code	
Black	Hot
Red	Hot
Blue	Hot
White	Neutral
Green	Ground

1.3.2 AC System Grounding

1. All AC equipment shall be grounded. Prior written approval is required for use of double insulated devices. Call Caltrans Division of Equipment, Quality Assurance Branch at 916-227-9709.
2. Grounding conductors shall be green insulated wire or green wire with yellow stripe.
3. In a grounded distribution system, there shall be only one connection to ground, regardless of the number of power sources. The ground wire shall be 8 gauge and

connected at the main engine battery ground (earth) point. Installer shall use only those ground (earth) points recommended by the vehicle or equipment manufacturer.

4. Each receptacle outlet shall have a grounding-pole and a grounding-conductor in the portable cord.
5. Metal conduit may not be used to ground electrical equipment or systems. A separate wire shall be used.
6. Grounding shall conform to National Electric Code (NEC) 250-6 (Portable and Vehicle Mounted Generators.)
7. All metal parts, conduit, enclosures, frame, etc., shall be bonded to the grounding terminals of the switchboard and/or distribution panels.

1.3.3 Material and Equipment

All parts used on AC systems shall be UL listed or recognized.

1.3.4 AC System Cable and Wiring Requirements

AC system and wiring shall conform to the following:

1. **Conduit:** All AC hookup wire shall be run in metal conduit. When exposed to the outside environment, wires shall be run in liquid-tight, 105 Â°C, jacketed, flexible steel (e.g., Type ALTA by Electri-Flex) or EMT conduit. (e.g., UL Std. 797 ANSI C-80.3). If EMT conduit is used, it shall only be used on rigid sections. It is acceptable to use non-jacketed flexible steel conduit (e.g., Type BR by Electri-Flex) in dry locations.
2. **Conduit Fittings:** Liquid-tight conduit fittings shall be insulated, steel/iron type (e.g., RACO # 35xx). For EMT conduit, fittings shall be insulated steel/iron compression type (e.g., RACO #29xx). Insulated set screw type connectors are acceptable only for short conduit runs in dry locations. (e.g., RACO 21XX). For non-jacketed, flexible, conduit, fittings shall be insulated steel/iron squeeze type (e.g., RACO #33xx). Die cast zinc conduit fittings are not allowed in any application.
3. **Boxes:** Boxes shall be weather proof aluminum, threaded hole type with appropriate covers. Steel outlet or handy boxes are not acceptable. (e.g., Bell Weatherproof #53xx).
4. **Wire termination:** AC devices that come with pigtails, shall be terminated with nylon insulated double crimp type butt splice or nylon insulated bell or closed end crimp splices. Wire nuts are not acceptable for AC wire termination. For outlets, switches or other AC devices wires shall be inserted through the rear and attached with screw clamps or insulated ring terminal to screws .
5. Wiring shall have stranded copper conductors with sufficient current carrying capacity. Solid core wire is not acceptable. Conduit shall be installed with metal supports not more than 18 inches apart.
6. Boxes shall be mounted per National Electric Code (NEC) 370 (Outlet, Device, Pull and Junction Boxes, Conduit Bodies and Fittings)
7. Also reference Sections 1.2.3, 1.2.4, 1.2.6, 1.2.7, 1.2.11, and 1.2.12.

1.3.5 Shore Power

Equipment with an electrical system operating at single phase 120/240 volt ac, which is provided with a means to connect to shore power, shall meet the following:

1. A shore power connection box or weatherproof (IP 65) surface receptacle shall be permanently installed at a convenient location. The ac power inlet receptacle shall be a locking male type. (e.g. ParkPower by Marinco).
2. A label shall be placed next to the shore power connection stating the voltage, frequency and current rating of the connection. (e.g. "120 V AC, 60 Hz, 30 amp")
3. An outside rated weatherproof (IP 65) shore power cable, 25 feet minimum length, connecting the shore power connection box or receptacle to the switchboard or main distribution panel shall be provided. (e.g., ParkPower by Marinco)
4. A circuit breaker shall be provided at the switchboard or main distribution panel for shore power connection
5. The circuit breaker, required by Section 1.3.5.C(above) shall be interlocked with the vehicle's power sources so that shore power and the vehicle's power sources may not be operated simultaneously. (e.g., Carling Tech. C Series Power Selector or a manual or automatic transfer switch)
6. The circuit breaker used shall also open all ungrounded (hot) conductors. A circuit breaker may be installed in the grounded neutral (white) wire as long as it opens all current carrying conductors in the circuit.
7. The shore power green ground wire shall have no switches or circuit breakers installed and shall be connected to the ground point at the Switchboard / Distribution Panel.

1.3.6 AC Switchboard & Distribution Panels

1. Each distribution panel or switchboard shall be in a location as dry as practicable, accessible, adequately ventilated, and protected from falling debris and dripping or splashing water.
2. Each distribution panel or switchboard shall be totally enclosed and of the dead-front type.
3. Each distribution panel or switchboard accessible from the rear shall be constructed to prevent a person's accidental contact with energized parts.
4. Each uninsulated current-carrying part shall be mounted on noncombustible, nonabsorbent, high-dielectric insulating material.
5. Each distribution panel or switchboard shall have a grounding terminal block with enough terminals for all AC chassis grounding.
6. Each distribution panel or switchboard shall have a separate neutral (white) wire terminal block with enough terminals for all neutral wiring. It shall be insulated from the equipment AC chassis grounding.

7. Equipment mounted on a hinged door of an enclosure shall be constructed or shielded so that no person shall come into accidental contact with energized parts of the door-mounted equipment when the door is open and the circuit energized.
8. The door of each panelboard enclosure that is accessible to the public shall have a locking device.
9. Each panelboard switching unit shall be labeled
10. Each switch board or distribution panel shall have a volt meter to indicate the main incoming voltage. (Welder generators do not apply).
11. Appropriate warning labels shall be placed on the outside of switch boards and distribution panels. (e.g. Warning/danger 120/240 VAC).
12. Each panelboard shall have:
    1. A circuit directory label
    2. The circuit designation of each circuit.
    3. The rating of the overcurrent protective device for each circuit.

1.3.7 AC Receptacles & Switches

1. All receptacles shall be protected by a Type A ground fault circuit interrupter, hospital grade or better. (e.g., Leviton Smartlock GFCI, hospital grade, 15A-125v [20A-125v] with light, 8598-HGW [8898-HGW], or equivalent).
2. Manufacturer's recommendations for hooking up wires to plugs, receptacles, switches and devices shall be followed.
3. AC receptacles shall be the grounding type and shall be installed per National Electric Code (NEC) 210-7 (Receptacles and Cord Conductors).
4. AC receptacles and plugs shall not be used for DC nor shall DC receptacles and plugs be used for AC.
5. All AC outlets, switches etc., shall be specification grade or better (e.g., 5262A, 5362A and 1201-2, 1221-2 by Leviton).
6. All receptacles exposed to the outside environment shall be weatherproof and installed per National Electric Code (NEC) 210-7 (Receptacles and Cord Conductors).
7. Receptacles shall not be installed with the face pointing up.

1.3.8 AC Testing

1. **Dielectric or Insulation Test:** The 120 V AC system shall be tested for breakdown of the wire insulation. All switches shall be closed, between current carrying conductors including neutral and vehicle ground. The AC system shall withstand this test without breakdown.
2. **Continuity Test:** This test is to verify that all metal parts are bonded to ground.
3. **Polarity Test:** This test is to verify that all connections have been made correctly.

2. Crimps and Terminals

2.1 References

Before starting any wiring work for Caltrans, it is highly recommended that prospective vendors refer to the most recent version of IPC-A-620 (Class 2). " *Requirements and Acceptance for Cable and Wire Harness Assemblies* ". This document will be used by Caltrans inspectors as part of quality assurance acceptance inspections. Crimping references from Molex and others are listed in the Reference section.

2.2 Crimps and Tools

2.2.1 Tools

1. The connector manufacturer's recommended application specification shall be followed for proper termination of crimp terminals.
2. Acceptable crimp connections shall be gas tight. Gas tight connections are like a cold weld and will remain corrosion free. Gas tight crimps are only achieved with use of the proper tools. One type of tool for installing crimps and terminals in wire size 22 to 10 gauge is the crimp manufacturer's recommended, ratcheting, compound lever type tool that must go through a full crimp cycle before releasing. If there are questions regarding crimps and proper tooling, please call Caltrans, Division of Equipment, Quality Assurance Branch at 916-227-9709.
3. Installation of crimps and terminals in size range 8 gauge and larger shall use the crimp manufacturer's recommended heavy duty compound lever or hydraulic style die type tool or soldered. Crimping is preferred over solder.
4. Wires shall be stripped with the proper tool. Wire strip lengths shall conform to the crimp terminal manufacturer's recommendations.

2.2.2 Parts and Materials

1. Metals used for and with electrical connections (studs, nuts, screws, etc.) shall be corrosion resistant (e.g. Tin, Zinc Plate, etc.)
2. A connector or lug of the set screw type must not be used with a stranded conductor smaller than 10 gauge unless there is a nonrotating follower that travels with the set screw and makes pressure contact with the conductor. If a follower is not available then a nylon insulated, tin plated, double crimp style, pin terminal (wire ferrule) shall be used to terminate the wire. Trailer connectors do not apply.
3. Twist-on wire connectors or insulation displacement type wire connectors shall not be used. (e.g., wire nuts, scotchlock, etc.)

4. If solder is used to connect wires or terminals then the connections shall be supported to prevent flexing of the connection. Adhesive lined heat shrink tubing is an acceptable means of support. (e.g. ES 1000 by Raychem, TES by 3M)
5. When soldering wires use only rosin core solder. Acid core solder is not acceptable.
6. All noninsulated crimp or solder heavy duty lugs shall be sealed with adhesive lined heat shrink tubing (e.g., ES 1000 by Raychem, TES by 3M).
7. Plug and receptacle connectors shall have means to support wires and limit flexing (e.g., back shells with strain relief).
8. For 22 to 10 gauge wires, solderless insulated crimp terminals shall be double crimp style tin plated copper, UL listed, nylon insulated, red, blue, yellow, rated to 220Âº F. (e.g. PIDG by Amp, Avikrimp by Molex)
9. For 22 to 10 gauge wires, non-insulated barrel styles shall be tin plated copper, braised seam, UL listed, rated to 300Âº F. (e.g. Solistrand by Amp, Versakrimp by Molex)
10. For wires 8 gauge and larger, non-insulated crimp terminals shall be heavy duty, seamless, copper, tin plated, no inspection hole. (e.g. Heavy Duty Drawn Electrical Lug [1526xxx-2] by Amp, Eyelet Style Copper Lug Terminal [19221-0xxx] by Molex)

2.2.3 Size and Fit

1. Terminals shall be matched to wire gauge sizes.
2. Ring or locking spade terminals shall be used and shall have the same size ring or locking spade as the stud or screw they attach to. Quick disconnect terminals shall have the same matching size.

2.3 Protective Measures

All unmated connectors shall be protected with metal or plastic caps or otherwise suitably protected during maintenance, storage and shipment. Protective caps specified and designed for mating with specific connectors shall be used. Unmated connectors which may contain electrically "hot" circuits that may be exposed to the outside environment shall be covered with weatherproof (IP65) caps. Spring loaded, self closing, sealing, snap type covers are acceptable. Connectors on enclosed cabinet mounted equipment need not be provided with protective caps unless exposure to the outside environment is possible. Each positive terminal or stud that is energized shall have a boot, cap, cover or shield that prevents accidental short-circuiting at the terminal or stud.

2.4 Battery Terminals

1. Only heavy duty ring lugs, seamless, tin plated copper (no inspection hole), or cast copper lugs, tin plated, full height, zinc plated nut and bolt, and sized to fit positive and negative posts shall be used. (e.g. Cable Maker Battery Terminals by Amp, Precision Die Cast Copper battery Lugs #19221-0xxx, #19218-00xx by Molex, Precision Die Cast

Copper Battery Terminals #19218-00xx By Molex, MagnaLug Battery terminals #19221-0xxx By Molex). (Universal size 2102T by AC Terminals)
2. Attach terminals with manufacturer's approved crimping tool or solder.
3. Terminals shall be sealed and the wire supported with adhesive lined heat shrink tubing. (e.g. Es 1000 by Raychem, TES by 3M)

2.5 Connectors

1. Plugs and receptacle connectors exposed to the outside environment shall be weatherproof (IP65), or, if they can be submerged, water tight (IP67).
2. Connectors used in multiple electric circuits shall be selected to preclude mismating. Where design considerations require plug and receptacles of similar configuration in close proximity, the mating plugs and receptacles shall be suitably coded or marked to clearly indicate the mating connectors. The design of the connector shall be such that the operator is not exposed to electrical shock or burns when normal disconnect methods are used. Exposed pin contacts shall not be energized (hot) after being disconnected from the socket contacts.
3. Connectors shall lock together.
4. Dielectric compounds shall not be used as the primary means to seal a connector. Such compounds are considered a backup to the main seal. If a dielectric compound is used (e.g., #4 electric insulating compound by Dow Corning) it shall not detrimentally effect electrical conduction between plug and receptacle. All connectors related to trailer and truck exterior running lights, stop, tail and turn lights, etc., shall be sealed with a dielectric compound.
5. Cables and separable harnesses shall be of the two-connector type. The two connectors shall be of the same number of contacts and all contacts shall be wired point-to-point; (e.g., pin 1 to pin 1, pin A to pin A, or pin 1 to pin A and up in sequence).
6. Not more than one wire shall be routed through any hole in the grommet of an environmentally sealed connector.
7. Clearance between terminal strips, standoffs or similar connections shall be such that no accidental contact can occur between adjacent connections when subjected to service conditions.
8. Each wire lead terminating at a connection point shall have allowance for enough slack (strain relief) to minimize tensile or shear stress.
9. Ring and/or locking spade terminals that are exposed to the outside environment shall be covered and sealed with a corrosion resistant film (e.g., Liquid Tape Electrical by Plastic Dip, 3M Underbody Coating, etc.)

2.6 Number of Lugs per Terminal Board

1. The maximum number of lugs to be connected to any one terminal on a terminal board should be two for screw-type terminal boards. For stud type terminal boards, not more than four lugs should be connected to any one terminal of a board. Accessories such as

stud connectors, straddle plates, jumpers and terminal board lugs shall be counted as lugs for this purpose.
2. In no case shall the total cross sectional area of the terminated wires exceed the cross sectional area capacity of the terminal or lug. If a greater number of wires are required than those specified herein, written approval of Caltrans, Division of Equipment, Quality Assurance shall be obtained.
3. Lugs connected to terminals shall be sized to fit (i.e., cutting to fit is not acceptable).

3. Overload Protection (DC and AC Circuits)

3.1 Location

1. Each overcurrent device shall be readily accessible and labeled. The labels shall include the circuit designation and the current rating for each circuit.
2. Each overcurrent device shall not be exposed to mechanical damage.
3. Each overcurrent device shall not be near any easily ignitable material or where explosive gas or vapor may accumulate unless ignition protected.
4. Each overcurrent device shall not damage adjacent items.
5. Each overcurrent device shall be positioned for easy accessibility.

3.2 Fuses

Where fuses are used, it is recommended that an extra fuse of each type and rating shall be supplied or attached to the applicable unit(s) of the equipment. Panel-mounted fuse holders shall permit replacement of fuses without use of tools. (Recommended fuses are mini blade type, ATO/ATC type, maxi fuse type and ignition proof ANL/CNL type).

3.3 Re-settable Circuit Protectors

Circuit breakers or other re-settable devices shall be used to protect critical circuits, or where predictable overloads or surges occur because of peculiar equipment functions or operator effects which are unavoidable. (Recommended circuit breakers are, mini blade type, ATC type, Maxi type, Series 180 Hi-Amp type, Series 174 flat pak, Series 120 short stop and Hydraulic Magnetic type A-series, B-series, and C-series).

3.4 Conductor Carrying Capacity

Conductors shall be protected in accordance with their current carrying capacities. If the allowable current carrying capacity does not correspond to a standard device size, the next larger overcurrent device may be used provided it does not exceed 125% of the conductor current carrying capacity.

3.5 Fusible Link

Fusible links are not recommended but if used shall not be in the driver's compartment.

3.6 Voltage Rating

The voltage rating of each circuit breaker or fuse shall not be less than the nominal circuit voltage of the circuit it is protecting.

3.7 Storage Battery Main Fuse

Each positive output conductor from a storage battery shall have a manually reset, trip-free circuit breaker or fuse, except those circuits as describe in CFR Title 49 section 393.31 "Overload Protective Devices". It is preferred to make this connection at the starter motor relay's positive terminal, not at the battery's positive terminal.

1. The circuit breaker or fuse shall be as close as practical to the battery.
2. If it is physically impractical to place the circuit breaker or fuse at the battery, then it may be placed within 72 inches (measured along the conductor) as long as the conductor is contained throughout its entire length in loom and stays within an enclosure such as a junction box, control box, enclosed panel or engine compartment. Exceptions require prior written approval from Caltrans, Division of Equipment, Quality Assurance at 916-227-9709.

3.8 Current Overload Protection

No overcurrent protective device shall be connected in series with any conductor which is grounded at the power source unless the device simultaneously opens all load conductors in the circuit and no pole operates independently. Protective devices for wired-in equipment shall be connected to the load side of the equipment power switch (main circuit power disconnect). For portable equipment, a separable connector or the attachment plug and receptacle shall serve as the main circuit power disconnect and the protective device should be on the load side of the equipment on-off switch.

3.9 Power Source Branch Fuse

1. A manually reset, trip-free circuit breaker or fuse shall be placed at the source of power for each branch circuit or conductor except those circuits as describe in CFR Title 49 section 393.31 "Overload Protective Devices". Fuses in branch circuits shall open before the fuses in the primary or main circuit.

2. If it is physically impractical to place the circuit breaker or fuse at the source of power, it may be placed within seven inches of the source of power for each circuit or conductor measured along the conductor.
3. If it is physically impractical to place the circuit breaker or fuse at or within seven inches of the source of power, then it may be placed within 40 inches (measured along the conductor) of the source of power for each circuit or conductor, so long as the conductor is contained throughout its entire distance in split loom and stays within an enclosure such as a junction box, control box, enclosed panel or engine compartment.

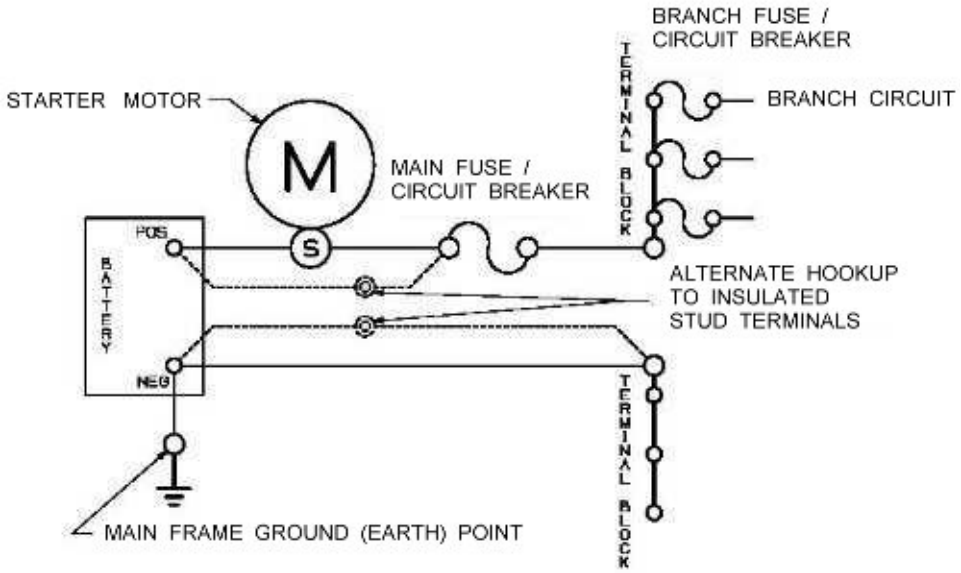

MAIN FUSE AND BRANCH FUSE

3.10 General Circuit Breakers

1. Circuit breakers shall give a visual indication when tripped. Holding the switching device closed on an overload shall not prevent tripping of a breaker (except Type 1).
2. All circuit breakers for use on 120 or 240 V AC 60 Hz shall have thread studs or screw terminals for attaching ring terminals.
3. Circuit breakers shall be designed for mobile equipment applications. Circuit breakers designed for stationary operation, e.g., house, building, stationary equipment shall not be used.
4. For AC applications, circuit breakers shall be Hydraulic Magnetic type, UL recognized or UL listed or, if ignition protected, UL 1500. (e.g. Carling technologies A-series, B-series, C-series.)
5. The use of standard Type 1 (automatic reset) or Type 2 (non cycling) circuit breakers require prior written approval. Call Caltrans, Division of Equipment, Quality Assurance Branch at 916-227-9709.

3.11 Manual Operation

1. Circuit breakers, if required, shall be capable of being manually operated to the ON and OFF positions.
2. Circuit breakers shall not be used as ON-OFF switches unless such breakers have been specifically designed and tested for that type of service.

3.12 Position Identification

Circuit breakers shall have easily identified ON, OFF and TRIPPED positions except that the TRIPPED position may be the same as the OFF position with no differentiation between OFF and TRIPPED being required.

4. Batteries

4.1 General

Disconnect batteries and all power sources before doing any electrical work. Before welding or cutting, disconnect all sensitive electronic assembly or devices.

4.1.1 Battery Types & Terminology

1. Battery terminology is not standardized but distinct battery types are intended for different uses. Batteries used for starting cars and trucks are commonly referred to as "flooded", "liquid" or "wet" batteries.
2. Deep cycle lead acid batteries are usually designed with thicker plates and are intended for slower and longer discharge cycles. Typical applications include auxiliary equipment power supply or solar powered applications. Deep cycle batteries are of the liquid type, "gel" type or "AGM" type (Absorbed Glass Mat). Both gel and AGM batteries are sometimes referred to as "sealed" batteries. Both gel and AGM batteries require special charging voltage, current set points and control logic.

4.1.2 Battery Installation

1. Battery installation shall comply with the requirements set forth in the Federal Motor Carrier Safety Regulations §393.30 Battery installation.
   Every storage battery on every vehicle, unless located in the engine compartment, shall be covered by a fixed part of the motor vehicle or protected by a removable cover or enclosure. Removable covers, or enclosures shall be substantial and shall be securely latched or fastened. The storage battery compartment and adjacent metal parts which might corrode by reason of battery leakage shall be painted or coated with an acid

resisting paint or coating and shall have openings to provide ample battery ventilation and drainage. Whenever the cable to the starting motor passes through a metal compartment, the cable shall be protected against grounding by an acid and waterproof insulating bushing. Wherever a battery and a fuel tank are both placed under the driver's seat, they shall be partitioned from each other, and each compartment shall be provided with an independent cover, ventilation, and drainage."

2. Batteries shall not be installed above or below a fuel tank, fuel filter, or fuel fitting. Metal fuel lines within 12 inches of a positive battery terminal shall be insulated with high dielectric material to prevent accidental short circuits.
3. The positive connection on each battery shall be protected so that metallic objects cannot come into contact with it. This can be done with plastic boots, or shields, or putting the batteries in a covered plastic battery box. Any bus distribution system, inverters, starters, etc., directly connected to the positive side of the battery shall be similarly protected by plastic boots or shields.
4. Batteries wired in parallel shall be the same type and capacity.
5. Battery and DC circuits shall be physically separated by at least a ½ inch gap from circuits of a different power source. Wires run inside conduit provide adequate separation.

4.1.3 Battery Compartments

Battery compartments shall be provided in accordance with the following:

1. Installed batteries shall be held in place by battery hold down clamps and not move more than one quarter inch (0.25") in any direction. Battery hold downs shall not impede normal expansion and contraction of the battery case.
2. Provide access for battery installation, maintenance, testing, and removal without disassembly of equipment.
3. Prevent build-up from heat, gasses, liquids, or chemicals released during battery operation, charging, deterioration, or rupture, (e.g., vents).
4. Prevent build-up of heat, gases, liquids, or chemicals from entering the electronic compartment. (i.e., seal off from other compartments or components).
5. Installer shall also comply with the National Electric Code (NEC) 551-10d (Battery Installations).

4.2 Liquid Batteries

1. If the surface the battery is mounted on can be attacked by electrolyte a means shall be provided so that material is not damaged.
2. Leakage or spillage of electrolyte shall be contained.
3. Fasteners for battery boxes or tray shall be isolated from areas used to collect spilled electrolyte.
4. Liquid batteries shall not be installed inside a passenger compartment.

4.3 Deep Cycle Batteries

Deep cycle charging applications (e.g. solar charging systems and inverter power) shall use absorbed glass mat (AGM) batteries. (e.g., Chairman Series, Lifeline Series, Sun Xtender Series by Concord).

5. Quality

5.1 Workmanship

5.1.1 Cleaning

After fabrication, parts and assembled equipment shall be cleaned of smudges; loose, spattered, or excess solder; weld metal; metal chips and mold release agents; or any other foreign material which might detract from the intended operation, function, or appearance of the equipment.

5.1.2 Threaded Parts or Devices

Screws, nuts and bolts shall show no evidence of cross threading, mutilation, or detrimental or hazardous burrs, and shall be firmly secured. The length of the screws and bolts installed with nuts shall be such that the exposed portion is a minimum length equivalent to 1.5 thread pitches plus the chamfer. Maximum length shall be limited by the nearest larger standard screw length.

5.1.3 Removable Parts and Mating Connectors

1. Electronic equipment shall be furnished with a complete set of installed fuses, lamps, plug-in relays and other parts which are used in the equipment and which are similarly designed for quick removal and replacement.
2. Mating cables and connectors required for normal equipment operation shall be provided.

5.1.4 Installation

Equipment shall be designed for installation, removal and reinstallation without special tools unless with written approval by Caltrans.

5.1.5 Construction and Mounting

Equipment shall be constructed so that no fixed part shall become loose during transport or during normal maintenance and operations functions.

5.1.6 Fastener Hardware

1. Fasteners shall be able to be removed and installed without damage to hardware.
2. Fasteners shall remain secure when exposed to equipment operational and environmental stresses.
3. Except for those items designed to be affixed with one fastener, parts shall be secured so failure of a single fastener will not free the part completely.
4. Friction between mating surfaces shall not be employed as the sole means of preventing fixed parts from rotating or shifting.
5. Fasteners shall be selected to minimize the number of standard tools used during maintenance.

5.1.7 Glass

All glass used in the equipment, shall be of the shatterproof type and appropriate for the specified environmental condition.

5.2 Accessibility

5.2.1 Access

1. Unsoldering of wires, wire harnesses, parts or assemblies shall not be required in order to gain access to terminals, soldered connections, mounting screws and the like during routine servicing and maintenance.
2. When it is necessary to displace a part in order to check or remove another part, the former part shall be wired and mounted so that it can be moved without being disconnected and without causing circuit detuning or instability.
3. Removal of the front panel or any sub-chassis for maintenance purposes shall be accomplished without unsoldering or soldering of connections.

5.2.2 Parts

Parts which are identified as replaceable parts shall not be mounted by means of rivets, spot welding, or hard curing compounds. Design shall be such that where plug-in modules or assemblies are used, they can be easily inserted in the proper location when correctly oriented without damage to equipment or parts being engaged.

5.2.3 Enclosures

Accessibility to chassis, assemblies, or parts contained within cabinets, consoles or other enclosures shall be provided from outside the basic equipment through the use of access doors, or by mounting such items on withdrawal slides, swinging doors, through cable extenders and cable retractors, provisions for circuit card extenders which shall allow part or module operation in the open position, or other arrangements to permit adequate access for properly servicing the equipment. Automatic or manually operated locks shall be provided to lock the chassis in the servicing position. When withdrawal slides are used they shall be of guided sectional construction with tracks and rollers. Complete removal and access for servicing of electronic equipment contained within cabinets, consoles or other enclosures shall be provided from either the front, side or rear of the equipment. Guide pins or locating pins, or the equivalent, shall be provided for mechanical alignment during mounting. Access panels and doors shall have means of support.

5.2.4 Compatibility

Equipment shall be designed for optimum accessibility compatible with operating, maintenance, electromagnetic compatibility, and enclosure requirements.

5.3 Substitutability

5.3.1 Unavailable Parts

When the equipment design specifies a part that is unavailable, a substitute part which meets the form, fit, and functional characteristics of the specified part may be substituted after written approval of Caltrans is obtained.

5.3.2 Initial Qualification / Reliability Demonstration

Substitute parts with quality/reliability characteristics superior to those specified in the parts list shall not be used in equipment to be subjected to initial qualifications or demonstration tests. In other words, a vendor cannot use one quality of parts and components to pass a test or demonstration, then change to lower quality parts for production items. The use of obsolete parts is not allowed.

5.4 Interchangeability

5.4.1 Design Tolerances

Design tolerances shall permit parts, subassemblies and assemblies to be used in their parent assemblies without regard to the source of supply or manufacturer. Parts, subassemblies and assemblies having the full range of dimensions and characteristics permitted by the specification governing the part, subassembly or assembly shall be usable as replacement items and without departure from the specified performance guidelines of the parent items.

5.4.2 Parts and Materials

When written permission is granted to use a nonstandard part or material because the existing standard part or material is not available, the equipment shall be so designed that the nonstandard part or material and the standard part or material is interchangeable. When the specification for the part or material contains substitutability or suppression information, the design shall permit the substitute or superseding parts or materials to be used interchangeably.

5.5 Markings

5.5.1 Wiring Identification

1. All wiring circuits shall be readily identifiable. Circuits shall be identified by either color, number, letters or symbols.
2. All terminal blocks shall have identification (i.e. by numbers/letters or schematic).
3. A wiring schematic shall be provided and attached to or stored on the vehicle.

5.5.2 Abbreviations and Legends

Abbreviations and legends shall conform to ASME Y14.38M.

5.5.3 ID Plates

Assemblies shall be permanently marked or identified. The ID plate shall be fastened in such a manner as to remain firmly affixed throughout the normal life expectancy of the item to which it is attached

5.5.4 Marking Cables, Cords and Wires

The following methods shall be used to mark cables, cords and wires:

1. Molded on the cable or cord.
2. Stamped on the cable, cord or wire
3. Bands securely attached or captivated
4. Adhesive tag or tape that shall withstand the applicable environmental guidelines.

5.5.5 Switches and Controls

Switches and electrical controls shall be marked as to their usage.

5.5.6 Connections

Marking adjacent to plugs, jacks and other electrical connectors shall identify the connected circuits to preclude cross connections. The connections to AC electrical parts such as motors, generators and transformer shall include a connection schematic on the part.

5.5.7 Programmable Items

Equipment which is software programmable shall indicate the identifying number and revision of the software program which has been loaded into memory. The preferred method is to provide either a local or a remote display which is under the control of the software program.

6. Switches

A. Terminals shall be of the correct size to accommodate the wire or terminal as required by the switch current and load.
B. Blade terminals are not preferred but if used shall comply with SAE J858.
C. Screw terminals shall be at least a #6 or larger screw size.
D. A weatherproof (IP65) switch is required where it may be in the rain, splashed or subjected to spray.
E. Each switch that is in the weather shall be in a weatherproof (IP65) enclosure and externally operable.
F. Switches in branch circuits shall be installed in the positive wire. (Does not apply to reversing DC motors).
G. Switches shall meet the following conditions:

1. Switch voltage shall not be less than system voltage
2. Switches shall be designed to handle the load (current) they are switching
3. Switches shall match the load (current) type. Load (current) types are listed:
   - Resistive load (e.g., heaters)
   - Inductive load (e.g., coils, transformers)
   - Capacitive load (e.g., DC power supply)
   - Lamp load (e.g., tungsten filaments)
   - Motor load (e.g., DC or AC motors)

7. Electromagnetic Interference

1. Good means of suppression are:
   - Resistors
   - Capacitors and inductors
   - Interference suppression filters
   - Ferrite cores
   - Special wiring and connections
   - Shielding
   - Diodes
   - Grounding
   - Separation between devices, rerouting
2. The amount of suppression and type needed depends on the vehicle and source of interference (e.g., computing devices, radio transmission, cell phone, motors, coils, etc.).
3. Electronic items that may be sensitive to interference shall have their wiring run separately from other wiring or be shielded and grounded. Signal, data, control, and other low power conductors shall not be placed adjacent to DC power conductors.
4. The three types of electromagnetic propagation that must be dealt with are:
   - Radiated electromagnetic fields (radio transmitters)
   - Conduction. Physical connection between two devices close to each other, through wire and cable
   - Induction. Induced signal by either magnetically or capacitive coupling from one conductor to another.

   It is up to the installer or builder to address these and find the best method of suppression.

5. Wiring from engine instruments, electric motors, solenoids, alternator outputs, ignition systems, DC to AC inverters, electric fuel pumps, fluorescent lighting can cause noise problems.
6. If wiring can’t be separated to keep it from noisy wires then shielding or suppression are required.
7. Electrically operated equipment both installed and portable shall comply with interface standard requirements for the control of electromagnetic interference of subsystems and equipment.

8. When the engine is being started no electronic device shall be on unless the device is on an isolated circuit.
9. When auxiliary electrical systems are added they must have no EMF effect on the vehicle.
10. Equipment containing a DC electric motor must have a blocking diode installed to prevent back EMF. If the motor is driven by a relay or solenoid then the solenoid/relay coil shall have the blocking diode.

8. Relays and Solenoids

8.1 Circuit Transient Surges, Arc Suppression, and Voltage Surge Protection

Protective devices shall be used to limit surge current (back EMF). All relay and solenoid coils shall have built-in or exterior mounted circuitry to limit surges. Such circuitry (e.g., diodes, resistor, varistor, zener-zener) shall be located at the coil.

8.2 Continuous Current

Derating of continuous current is dependent upon the load type. If a relay is used to switch a combination of loads, the dominant load shall be used for derating purposes.

8.3 Coil Energizing Voltage

The voltage to energize or trigger the relay shall be at least 110% of the minimum rated energizing voltage.

8.4 Coil Dropout Voltage

The voltage to dropout or un-trigger a relay shall be less than 90% of the maximum rated coil dropout voltage.

8.5 Shock and Vibration

Special mounting considerations are necessary for mechanical relays in high temperature or vibration environments. Relays shall not unintentionally switch even during worst-case operating conditions.

9. AC Generators and Inverters

9.1 AC Generators

If there is a difference between this Caltrans Division of Equipment Electric Standard and the National Electric Code (NEC), then the Caltrans Division of Equipment Electric Standard takes precedence.

1. Generators shall be made to operate in ambient temperatures up to 122° F.
2. Belts shall be replaceable without taking apart any major part of the generator.
3. Items needed for normal maintenance (such as oil fills, filters, drains, dipsticks, etc.) shall be accessible and shall be installed in accordance with the manufacturer's instruction.
4. All exposed belts and rotating parts shall be covered with guards. (does not apply to vehicle engine driven units under the hood.)
5. Generators shall be installed per the manufacturer's instructions and National Electric Code (NEC) 551-30 (Generator Installation) and Article 455-Generators.
6. The chassis ground (earth) point on the generator shall be attached with at least #8 gauge, green insulation, flexible wire to the main engine/battery ground (earth) point on the equipment. Also allowed for the ground wire is green heat shrink or green electrical tape. Installer shall use only those ground (earth) points recommended by the vehicle or equipment manufacturer.
7. All generator fuel system connections shall be accessible.
8. Fuel lines shall not be tied to electrical wiring.
9. Fuel lines shall be protected from abrasion, heat sources, and electrical wiring.
10. All generators shall be supplied with operator's manuals and installation manuals.

9.2 Inverters

If there is a difference between this Caltrans Division of Equipment Electric Standard and the National Electric Code (NEC), then the Caltrans Division of Equipment Electric Standard takes precedence.

1. A voltmeter (e.g., display) or light shall be provided to show that the inverter is on, or in standby.
2. Inverters are to be installed per manufacturer's instructions and National Electric Code (NEC) 551-30 (Generator Installation) and Article 455-Generators.
3. The chassis ground point on the inverter shall be attached with at least #8 gauge flexible, green insulation wire to the main engine/battery ground point on the equipment. Also allowed for the ground wire is green heat shrink or green electrical tape. Installer shall use only those ground (earth) points recommended by the vehicle or equipment manufacturer.
4. Inverter control panels shall be accessible.

10. Protection from Wet and Corrosive Environments

10.1 Enclosures

Each enclosure and part of electric equipment that can be damaged by corrosion shall be made of corrosion-resistant materials or of materials having a corrosion resistant finish. Electrical enclosures exposed to the outside environment shall be weatherproof (IP65) or shall be installed out of the weather.

10.2 Moisture Pockets

Where moisture pockets are unavoidable in unsealed equipment, provision shall be made for drainage of such pockets. Desiccants or moisture-absorbent materials shall not be used within moisture pockets. Pockets, wells, traps, and the like in which water or condensate could collect when the equipment is in normal position shall be avoided.

10.3 Corrosion Protection

10.3.1 Corrosion Resistance

1. Metals shall be corrosion resistant or shall be coated or metallurgical processed to resist corrosion.
2. Metal surfaces not otherwise protected as described above shall be painted.
3. The painted surfaces shall withstand the environmental conditions defined by the equipment specification for the entire service life of the equipment without flaking, cracking, or allowing any corrosion of the underlying surface. Battery storage area may need added protection.
4. Painted finish shall be in accordance with Caltrans Paint & Coatings Standard.

10.3.2 Weatherproofing/Waterproofing

Electrical equipment used in a location that may be exposed to the outside environment shall be weatherproof (IP65). Electrical equipment that may be submerged shall be watertight (IP67).

11. Adhesives and Sealants

11.1 Adhesives

11.1.1 Design of Joint

The joint shall be designed to minimize concentrations of stress. The basic stress shall be in shear. The weakest design is where the basic stress is in cleavage or peel and non-axial loading in tension produces cleavage.

11.1.2 Harmful Effects

The user shall ascertain that the formulation of the adhesive selected shall have no harmful effects on the bonded assembly or nearby items when bonded assembly is in storage, transit or use under the environmental conditions for which it was designed. Harmful effects may be caused by the slow release of trapped solvents which can damage many types of rubber and plastic, or cause other harmful results degrading operation of the equipment. All manufacturer’s application instructions shall be followed.

11.1.3 Structural Compatibility

Adhesives which are not compatible structurally shall be avoided. For example, a brittle adhesive shall not be used for glass bonding because excessive shrinkage during setting or curing shall load the glass in tension. For assemblies which may be flexed or subject to impact, a brittle adhesive shall not be used. All manufacturer’s application instructions shall be followed.

11.2 Sealants

If a sealant is necessary to seal electrical items a polyurethane sealant is the preferred choice. There are also specialty sealants made for electrical work (e.g., liquid tape, electrical by Plastic Dip, E6000 by Eletric Products). If a silicone is used it shall be one for use around electronics (#748 RTV silicon by Dow Corning). All manufacturer’s application instructions shall be followed.

12. Safety

Personnel shall be protected from injury by sharp edges of equipment, fasteners, parts, or cabinets during maintenance. Installer shall deburr all edges 1/32" minimum and shall radius all corners 1/8" minimum.

12.1 General Safety Provisions

1. Safety criteria shall be applied during equipment hardware design, selection, and construction to eliminate or control hazards that could cause injury to personnel.
2. Electrical equipment and installations shall be suitable for the roll, pitch, and vibration of a vehicle or other equipment.
3. All equipment, including switches, fuses, lampholders, etc., shall be suitable for the voltage and current utilized.
4. Receptacle outlets of the type providing a grounded pole or a specific direct current polarity shall be of a configuration that shall not permit improper connection.
5. All electrical equipment and circuits shall be clearly marked and identified.
6. Any cabinet, panel, box, or other enclosure containing more than one source of power shall be fitted with a sign warning persons of this condition and identifying the circuits to be disconnected.
7. Warning lights/indicators displaying a written word, picture or light shall be visible in all ambient light (sunlight readable) conditions. It is acceptable to use high intensity LED as indicator lights.

12.2 Temperature

At an ambient temperature of 25° C (77° F), the operating temperature of control panels and operating controls shall be not greater than 49° C (120° F) and not less than 12° C (53° F). The temperature of other exposed parts subject to contact by operating personnel shall not exceed 60° C (140° F). The temperature of all other exposed surfaces shall be not greater than 70° C (158° F).

12.3 Electrical

12.3.1 Power

1. Means shall be provided so that power may be cut off while installing, replacing, or interchanging a complete equipment, assembly, or part thereof. If a main power switch is provided, it shall be clearly labeled as such and shall cut off all power to the complete equipment.
2. A means shall be provided to protect personnel from accidental contact with voltages in excess of 30 V rms or DC during normal operations or maintenance of the equipment.
3. After power to the equipment is turned off, the equipment shall discharge all potential stored power within 2 seconds.
4. Personnel shall be protected from circuits greater than 21 mA AC and 80mA DC.

12.3.2 Protective Devices - Interlocks

When a unit is provided with access doors, covers or plates, these access points shall be interlocked as follows:

1. No interlocks are required when all potentials between 30 and 500 volts are completely protected with guards or barriers.
2. Bypassable interlocks are required when voltages in excess of 30 volts are exposed as the result of an access door, cover, or plate being opened. Note that these internal voltages are allowed to be unguarded only if they are not exposed during direct support or operator maintenance. The bypass device shall be of such design that closing the associated door, cover or plate shall automatically open the bypass device and leave the interlock in position to function normally. Visual means shall be provided to indicate when the interlock is bypassed.
3. Non-bypassable interlocks are required when any voltage in excess of 500 volts is exposed as a result of an access door, cover or plate being opened.

12.4 Mechanical

The design of the equipment shall provide personnel maximum access and safety while installing, operating, and maintaining the equipment. Equipment design shall include provisions to prevent accidental pulling out of drawers or rack mounted equipment components. Suitable protection shall be provided to prevent contact with moving mechanical parts such as gears, fans, and belts when the equipment is complete and operating. Sharp projections on cabinets, doors, and similar parts shall be avoided. Doors or hinged covers shall be rounded at the corners and provided with a means to hold them open.

12.4.1 Mechanical Interconnection

1. The design shall provide positive means to prevent the inadvertent reversing or mismating of electrical connectors, fittings; couplings; fuel, oil, hydraulic, and pneumatic lines; and mechanical linkage. When prevention of mismating by design consideration is not feasible, coding or marking shall be employed with written approval by Caltrans. Coding and marking shall not be approved as a substitute for proper design or items involving explosive, emergency, or safety critical systems.
2. Power switch location. Equipment power switches shall be selected and located so that accidental contact by personnel shall not operate the switch.

12.5 Equipment Safety Markings

1. Danger, warning, caution, signs, labels, tags and markings shall be used to warn of specific hazards such as voltage, current, thermal, or physical. The signs, labels, tags,

and markings shall be as permanent as the normal life expectancy of the equipment on which they are affixed. Guards, barriers, and access doors, covers or plates shall be marked to indicate the hazard which may be present upon removal of such devices. When possible, marking shall be located such that it is not removed when the barrier or access door is removed. Additionally, hazards internal to a unit shall be marked adjacent to hazards if they are significantly different from those of surrounding items. Such a case would be a high voltage terminal in a group of low voltage devices.

2. Physical hazards shall be marked with color codes in accordance with ANSI Z535.1 where applicable to electronic equipment.
3. For potentials between 70 and 500 volts, warning signs, labels, or tags shall be in accordance with ANSI Z535.3, ANSI Z535.4, or ANSI Z535.5
4. Signs shall be readable from an appropriate distance and shall create no additional distractions nor shall they be hazards themselves.

12.6 Flammability

Materials used in equipment shall, in the end item configuration, be noncombustible or fire retardant in the most hazardous conditions of atmosphere, pressure, and temperature to be expected in the application. Fire retardant additives may be used provided they do not adversely affect the specified performance guidelines of the basic materials. Fire retardance shall not be achieved by use of non-permanent additives to the basic material.

12.7 Ignition Protection

Electrical components that are in a space where gasoline, hydrogen, propane or any explosive fumes can accumulate shall be ignition protected.

13. Controls and Indicators

13.1 General Controls

All controls shall be marked, indexed, sized, and located so that the control position can be readily identified. Controls shall have fixed guide marks if pre-setting of the controls is required. Controls located adjacent to their associated displays shall be so positioned that operation of the control should not obscure the display. Controls shall be so connected in the circuit that the controlled characteristics; (e.g., sensitivity, volume, or voltage) increase with clockwise rotation of the control as seen from the operating position. In general, movement of a control forward, clockwise, to the right, or up, shall turn the equipment on, cause the quantity to increase or cause the equipment to move foreword, clockwise, to the right or up.

13.2 Operating Controls

Controls necessary for the operation of the equipment shall be readily accessible, and unless otherwise specified shall be located on the front panel of the unit.

13.3 Adjustment Controls

Adjustment controls that are required for periodic alignment or calibration shall be mounted behind covered openings, such as access doors, on the surfaces of the equipment accessible when installed. When not adjustable by hand, controls shall be designed to accept a common screwdriver blade tip. Controls which infrequently require adjustment need not be accessible from the operating panel, but shall be readily accessible for servicing when the equipment is opened for maintenance purposes.

13.4 Stops

Mechanical stops shall be provided for all adjustable controls, except controls designed for unlimited rotation. Where flexible control shafts are employed, or where stops integral to the adjustable control of the mechanism could be damaged by excessive torque, stops shall be provided on the driving end of the shaft.

13.5 Locking Devices

Control locking devices shall be capable of retaining the controls in any given setting within the range of control. The locking and unlocking action shall be easily and quickly accomplished, and shall not affect the setting of the control. When in the unlocked position, the locking devices shall not interfere with the normal operation of the control. Where vernier controls are used, the locking devices shall operate on both main and vernier controls if necessary to prevent damage.

13.6 Non-Turn Devices

All non-turning controls and bodies or cases of turning controls shall be equipped with a positive device to prevent their turning in the panel or assembly on which they are mounted.

13.7 Control Knobs and Handles

Control knobs and handles shall have high impact strength and shall be firmly secured to the control shafts by use of setscrews, nuts, etc., wherever that type of fastener is applicable. Plastic knobs and handles shall have metal inserts for setscrews and shall not warp or crack.

13.8 Stability

All controls shall be so designed that setting, position, or adjustment of any control shall not be altered when the equipment is subjected to the service conditions specified in the detail equipment specification.

13.9 Arrangement and Location

Controls shall be arranged to facilitate smooth and rapid operation. All controls which have sequential relations, which are related to a particular function or operation, or which are operated together shall be grouped together along with their associated displays. Controls shall be conveniently located with respect to associated visual displays. Controls shall be of such size and so spaced that the manipulation of a given control does not interfere with the setting of an adjacent control. Adjustment controls with required test points shall be grouped and so marked as to provide for simplicity and ease of maintenance.

13.10 Mechanical Operation

Infrequently required controls shall be screwdriver adjusted. Play and backlash in controls shall be held to a minimum commensurate with intended operational functions and shall not cause poor contact or inaccurate setting. Controls shall operate freely and smoothly without binding, scraping, or cutting. Controls may be lubricated when lubrication does not interfere with operation and is specified in the detail equipment specification.

13.11 Shafts and Couplings

Shafts subject to removal may have their couplings secured by two setscrews 90° to 120° apart. Flexible couplings may be used for controls where the use of rigid couplings would interfere with the satisfactory operation or mounting of such controls.

13.12 Tuning Dial Mechanisms

13.12.1 Dial

The division marking and lettering on tuning dials shall be suitably etched. Dial markings shall be legible at a distance of 0.6 meter from any point within a solid angle of 60° defined by a surface of revolution about a line through the center of the dial and perpendicular to the panel. Minimum space between characters shall be one stroke width. The width of the lubber line or pointer tip shall not exceed the width of the graduation marks. Except for digital tuning indicators, for which only one calibration number shall be seen, dials shall be marked so that at least two calibration numbers on each band can be seen at any dial setting.

13.12.2 Balance and Friction

Weighted turning knobs shall be counterbalanced. Friction in turning dial mechanism shall allow smooth and easy adjustment of the operating knob over the entire operating range of the mechanism, but shall have sufficient resistance or shall incorporate a positive locking device to maintain the setting under all specified service conditions. Friction shall be achieved through dry or elastic resistance rather than by fluid resistance.

14. Diagnostics and Test Provisions

14.1 Built-In-Test Devices

Built-in test devices shall maintain their accuracy under all operating conditions required by the equipment under test. These devices shall be provided with connections or access for their operational checkouts or calibration.

14.2 Test Provisions

Equipment which is required to be tested by on-line Automatic Test Equipment (ATE) shall provide test points.

14.3 Test Cables

Test cables and extender cards shall be provided and fitted with connectors to allow removable subassemblies to be electrically reconnected for maintenance.

14.4 External Test Points

Protection shall be provided in the test point circuitry to prevent equipment damage caused by the external grounding of test points.

14.5 Failure Effect

Provisions for testing shall be designed that any failure of built-in test devices shall not degrade equipment operation or cause equipment shut down.

15. Electronics

15.1 Environmental Conditions

Electronic equipment shall be capable of operating in the environment specified, see "Outside Environmental Conditions for the State of California."

15.2 Electronic Cooling

15.2.1 Forced Air Cooling

Forced air cooling shall be used only when natural cooling is not adequate. Exhaust and recirculating fans and blowers shall be driven by ac brushless motors or by properly shielded dc motors. Air filters shall be provided for air intakes for fan and blower cooled units when required to protect internal parts. Filters, when used, shall be removable for cleaning without disassembly of the equipment. All ventilation openings shall be designed and located to comply with electromagnetic interference, undesired radiation and enclosure guidelines. Air exhaust shall be directed away from operating personnel.

15.2.2 External Source Cooling

For equipment designed for use with forced air cooling, and the air may contain entrained water or other contaminants (e.g., dust) detrimental to the equipment, precautionary measures shall be taken to avoid direct impingement on internal parts and circuitry by channeling, filtering, baffles or use of heat exchangers.

15.2.3 Other Cooling Methods

Prior approval of Caltrans shall be obtained when heat densities or other design requirements make the use of air for cooling impractical and alternate methods, such as liquid, evaporative, air conditioners, change of phase material, or heat pipes, are required.

15.2.4 Fan and Blower Characteristics

1. The design factors which shall be considered in determining the required fan or blower characteristics include such factors as amount of heat to be dissipated, the quantity of air to be delivered at the pressure drop of the enclosed equipment, the allowable noise level, the permissible level of heat that may be exhausted into the surrounding environment, and other pertinent factors affecting the cooling requirements of the equipment. Induced drafts and ventilation by means of baffles and internal vents shall be

used to the greatest practicable extent. When practicable, ventilation and air exhaust openings shall not be located in the top of enclosures or in front panels.
2. When required, a visual or aural warning device shall be used to indicate failure of a cooling device.
3. Equipment that requires forced cooling to operate shall have control features to prevent equipment damage due to failure of the forced cooling.

15.2.5 Cooling Air Temperature Difference

The difference between the exhaust air temperature (measured inside the cabinet or console in front of the exhaust air vent) and input air temperature (measured outside the cabinet or console directly in front of the input air vent) shall be less than 59Â° F with the equipment operating under normal service conditions.

15.2.6 Temperature Controlled Fans

Fans controlled by an automatic temperature switch shall not come on when main power is shut off to the unit. A sign shall be placed near any automatic temperature controlled fan (e.g., "Caution fan may start at any time").

16. Printed Circuit Boards

16.1 General PC Board Requirements

PC boards manufactured for Caltrans equipment shall conform to the following minimum requirements:

1. Material: FR4 1 oz. Copper
2. Copper plate conductor surfaces to thickness required by current draw
3. Solder coat or tin-lead plate followed by reflow of all metallic surfaces (trace edges may be excluded) on two sided PC boards all through holes to be plated through.
4. Solder mask both sides of board
5. Copper etch or stamp with permanent ink the applicable revision letter
6. Silkscreen required to show component designator from schematic on component side.
7. Wire wrap shall not be used on printed circuit boards.
8. Printed circuit boards exposed to the outside environment, high humidity or condensing moisture shall have conformal coating.

16.2 Electronic Equipment Assembly Requirements

1. Refer to latest version of referenced standards.

2. Equipment assemblies, subassemblies, printed wiring assemblies, terminal board assemblies, electronic modules, etc., shall be Class 2 or better as defined in J-STD-001 "Requirements for Soldered Electrical and Electronic Assemblies".
3. Component mounting shall be in accordance with IPC-CM-770 "Component Mounting Guidelines for Printed Boards" or IPC-SM-780 "Component Packaging and Interconnecting with Emphasis on Surface Mounting", Class 2 or better.
4. Printed boards shall be in accordance with IPC-A-600 "Acceptability of Printed Boards" class 2 or better.
5. Assembly shall be in accordance with ANSI/IPC-A-610 "Acceptability of Electronic Assemblies" and J-STD-001B. Class 2 or better.
6. When conformal coating is required, coating material shall conform to IPC-CC-830 "Qualification and Performance of Electrical Insulating Compound for Printed Wiring Assemblies". Class A or better.
7. Solder mask shall be in accordance with IPC-SM-840, Qualification and Performance of Permanent Solder Mask, Class T.

16.3 Design/Process Checklist for Vehicle Electronics (SAE J1938)

The purpose of SAE J1938 is a checklist to provide a reminder and guideline of the different aspects of the electronic system design for vehicles.

16.4 Environmental Practices for Electronics Design (SAE J1211)

16.4.1 Applicability

Caltrans vehicles, coupes, sedans, hard top vehicles, and pickup trucks.

SAE J1211 states that as a recommended practice "the use of this report is entirely voluntary" (operative term is "should"). For use on Caltrans vehicles, this report is mandatory (operative term is "shall"). Refer to the latest version of SAE J1211.

16.4.2 Vendor Responsibility

Electronics shall be tested per SAE J1211 or by other applicable standards (e.g., IPC, Mil-Standard, etc.) that meet or exceed the requirements of SAE J1211. It is the responsibility of the supplier to provide test documentation and photographs certifying that the production electronics sold to Caltrans comply with these minimum conditions. If Caltrans duplicates these tests and the unit does not operate as required then the unit fails the test. If there are questions, please call Caltrans, Division of Equipment, Quality Assurance Branch at 916-227-9709.

16.4.3 Environmental Considerations

The data presented in SAE J1211, "Environmental Factors and Test Methods", describes major characteristics of the expected environment that have an impact on the performance and reliability of automotive electronic systems. These environmental characteristics are:

- Temperature
- Humidity
- Salt Spray Atmosphere
- Immersion and Splash (Water, Chemicals, and Oils)
- Pressure Washing
- Dust, Sand and Gravel Bombardment
- Altitude
- Mechanical Vibration
- Mechanical Shock
- General Electrical Environment
- Steady State Electrical Characteristics
- Transient, Noise, and Electrostatic Characteristics
- Electromagnetic Compatibility / Electromagnetic Interference

16.4.4 Location Within Vehicle

Environmental extremes are considered separately for the following locations inside and outside of vehicles and equipment:

- Underhood
- Interior
- Chassis
- Exterior

16.4.5 Temperature Cycle

Temperature testing shall meet the requirements of SAE J1211 Section 4.1.3. An 8 hour temperature cycle shall be used (Figure 2B). Temperature range shall be as required by location in the vehicle. The unit shall be on, running, and shall not fail during the test.

16.4.6 Thermal Shock

Thermal shock testing shall meet the requirements of SAE J1211 Section 4.1.3. Temperature range shall be as required by location in the vehicle. The unit shall be on, running, and shall not fail during the test.

16.4.7 Humidity

Testing shall meet the requirements of SAE J1211 Section 4.2.2. The unit shall be on, running, and shall not fail during the test. Test period shall be 8 hours (Figure 3B)

16.4.8 Salt Spray Atmosphere

Testing shall meet the requirements of SAE J1211 Section 4.3.2. The unit shall be on, running, and shall not fail during the test.

16.4.9 Immersion and Splash (Water, Chemicals, and Oils)

Splash testing shall meet the requirements of SAE J1211 Section 4.4.3. The immersion test is not required. Actual environmental chemicals to be tested are engine oils and additives, washer solvent, gasoline, diesel fuel, alcohol, anti-freeze water mixture, soap and detergents, steam, battery acid, water, snow and salt water.

16.4.10 Steam Cleaning and Pressure Washing

Pressure wash testing shall meet the requirements of SAE J1455 Section 4.5.3. The steam test is not required. The unit shall be on, running, and shall not fail during the test.

16.4.11 Dust, Sand, and Gravel Bombardment

Dust and sand testing shall meet the requirements of SAE J1211 Section 4.5.3. The alternate test method is acceptable. The unit shall be on, running, and shall not fail during the test. Gravel testing shall be performed as described in SAE J1455 Section 4.5.3

16.4.12 Altitude

Testing shall meet the requirements of SAE J1211 Section 4.16.3. The unit shall be on, running, and shall not fail during the test.

16.4.13 Mechanical Vibration

Vibration testing shall be guided by SAE J1211 Section 4.7. The unit shall be on, running, and shall not fail during the test.

An additional vibration test is the road test per SAE J1211 Section 4.7.3. Operate the vehicle over a non-paved road with rocks, ruts, pot holes, etc. (complex surfaces) for at least 100 miles in less than 8 hours. The unit shall be on, running, and shall not fail during the test.

16.4.14 Mechanical Shock (Operational)

Testing shall be guided by SAE J1455 Section 4.8, Sections 4.8.1.3 and 4.8.2.4. The unit shall be on, running, and shall not fail during the test.

16.4.15 General Automobile Electrical Environment

Testing shall meet the requirements of SAE J1211 Sections 4.9 and 4.10. The unit shall be on, running, and shall not fail during the test.

The units shall be tested from Table 2 Automotive (12 V system) voltage Regulation Characteristics. Table 3 – Automotive Transient Voltage Characteristics. Table 4 – Summary of Automotive Electrical Continuous Noise Characteristics.

16.4.16 EMI

1. For electrical noise, EMC, EMI, etc, refer to SAE J1113-13. The unit shall be on, running, and shall not fail during the test.
2. Electromagnetic immunity shall meet the requirements of EN 50082, and meet the light industrial standard.
3. Electromagnetic emissions shall meet class B requirements of EN 55022.
4. Devices that emit radio frequency (RF) energy are subject to the rules and regulations of the Federal Communications Commission (FCC) 47 CFR Parts 2 and 15.

16.5 Environmental Practices for Electronics Design (SAE J1455)

16.5.1 Applicability

Caltrans heavy-duty trucks and equipment other than sedans, vans and light trucks. Also see 16.5.5 Exterior Electronic Equipment.

SAE J1455 states that as a recommended practice "the use of this report is entirely voluntary" (operative term is "should"). For use on Caltrans vehicles, this report is mandatory (operative term is "shall"). Refer to the latest version of SAE J1455.

16.5.2 Vendor Responsibility

Electronics shall be tested per SAE J1455 or by other applicable standards (e.g., IPC, Mil-Standard, etc.) that meet or exceed the requirements of SAE J1455. Caltrans suppliers shall provide test documentation and photographs certifying that the electronics sold to Caltrans comply with these minimum conditions. If Caltrans duplicates these tests and the unit does not operate as required then the unit fails the test. If there are questions, please call Caltrans, Division of Equipment, Engineering Design at 916-227-9604 for clarification.

16.5.3 Environmental Considerations

The data presented in SAE J1455 "Environmental Data and Test Methods", describes characteristics of the expected environment that have an impact on the performance and reliability of truck electronic systems. These environmental characteristics are:

- Temperature
- Humidity
- Salt Spray Atmosphere
- Immersion and Splash (Water, Chemicals, and Oils)
- Pressure Washing
- Fungus
- Dust, Sand and Gravel Bombardment
- Altitude
- Mechanical Vibration
- Mechanical Shock
- General Electrical Environment
- Steady State Electrical Characteristics
- Transient, Noise, and Electrostatic Characteristics
- Electromagnetic Compatibility / Electromagnetic Interference

16.5.4 Location Within Vehicle

Environmental extremes are considered separately for the following locations inside and outside of vehicles and equipment:

- Underhood
- Interior Cab
- Interior (Aft of Cab)
- Chassis
- Exterior of Cab

16.5.5 Exterior Electronic Equipment

Exterior mounted electrical or electronic equipment shall use the guidelines listed in SAE J1455 Table 14 – "Exterior – Environmental Data" for design considerations and test criteria. This applies to trailer-mounted or truck-mounted arrowboard signs, trailer or truck-mounted portable changeable message signs (PCMS) and any other exterior mounted electrical equipment.

16.5.6 Temperature Cycle

Temperature testing shall meet the requirements of SAE J1455 Section 4.1.3. An 8 hour temperature cycle shall be used (Figure 2B). Temperature range shall be as required by location in the vehicle. The unit shall be on, running, and shall not fail during the test.

16.5.7 Thermal Shock

Thermal shock testing shall meet the requirements of SAE J1455 Section 4.1.3.2. Temperature range shall be as required by location in the vehicle. The unit shall be on, running, and shall not fail during the test.

16.5.8 Humidity

Testing shall meet the requirements of SAE J1455 Section 4.2.3. The unit shall be on, running, and shall not fail during the test. Test period shall be 8 hours (Figure 4a)

16.5.9 Salt Spray Atmosphere

Testing shall meet the requirements of SAE J1455 Section 4.3.3. The unit shall be on, running, and shall not fail during the test.

16.5.10 Immersion and Splash (Water, Chemicals, and Oils)

Splash testing shall meet the requirements of SAE J1455 Section 4.4.3. The immersion test is not required. Actual environmental chemicals to be tested are engine oils and additives, washer solvent, gasoline, diesel fuel, alcohol, anti-freeze water mixture, soap and detergents, steam, battery acid, water, snow and salt water.

16.5.11 Steam Cleaning and Pressure Washing

Pressure wash testing shall meet the requirements of SAE J1455 Section 4.5.3. The steam test is not required. The unit shall be on, running, and shall not fail during the test.

16.5.12 Fungus

Testing shall meet the requirements of SAE J1455 Section 4.6.3.

16.5.13 Dust, Sand, and Gravel Bombardment

Dust and sand testing shall meet the requirements of SAE J1455 Section 4.7.3. The alternate test method is acceptable. The unit shall be on, running, and shall not fail during the test.

Gravel testing shall be performed as described in SAE J1455 Section 4.7.3

16.5.14 Altitude

Testing shall meet the requirements of SAE J1455 Section 4.8.3. The unit shall be on, running, and shall not fail during the test.

16.5.15 Mechanical Vibration

Vibration testing shall be guided by SAE J1455 Section 4.9. Any of three different test methods may be specified. Where applicable, the specified Power Spectral Density (PSD) shall be used and housing shall be hard-mounted to the vibration source. Unit shall be functionally tested after appropriate stop points in the test (such as changing axis). Units shall be inspected and functionally tested at the completion of the test.

16.5.15.1 Swept Sine Vibration Tests

The first vibration testing shall be performed per SAE J1455 Section 4.9.4.1. Test severity depends upon intended location on a vehicle per Figure A1 in Appendix A. Test duration shall be 180 minutes for each axis. The unit shall be on, running, and shall not fail during the test.

16.5.15.2 Random Vibration Testing

The second vibration test method shall follow the random vibration testing described in SAE J1455 Section 4.9.4.2. The testing shall consist of 3-hour duration in each orthogonal axis at the following power spectral densities:

10 Hz	0.015 gÂ²/Hz
40 Hz	0.0015 gÂ²/Hz
500 Hz	0.00015 gÂ²/Hz

The unit shall be on, running, and shall not fail during the test.

16.5.15.3 Road Test

The third vibration test , SAE J1455 Section 4.9.4.3, is to operate the vehicle over a non-paved road with rocks, ruts, pot holes, etc. (complex surfaces) for at least 100 miles in less than 8 hours. The unit shall be on, running, and shall not fail during the test.

16.5.16 Mechanical Shock (Operational)

Testing shall be guided by SAE J1455 Section 4.10, sections 4.10.2.3 and 4.10.3.4. The unit shall be on, running, and shall not fail during the test.

16.5.17 General Heavy-Duty Truck Electrical Environment

Testing shall meet the requirements of SAE J1455 Section 4.11. The unit shall be on, running, and shall not fail during the test.

The units shall be tested from Table 3A Truck/Tractor (12 V system) voltage Regulation Characteristics. Section 4.11.2 Table 4A – Typical 12 V Vehicle Transient Voltage Characteristics.

16.5.18 EMI

1. For electrical noise, EMC, EMI, etc, refer to SAE J1113-13. The unit shall be on, running, and shall not fail during the test.
2. Electromagnetic immunity shall meet the requirements of EN 50082, and meet the light industrial standard.
3. Electromagnetic emissions shall meet class B requirements of EN 55022.
4. Devices that emit radio frequency (RF) energy are subject to the rules and regulations of the Federal Communications Commission (FCC) 47 CFR Parts 2 and 15.

17. Mobile Radio Telephone

A. Radio telephones shall be FCC approved for their intended service.
B. Installations shall conform with all FCC rules and regulations.
C. Installations shall be done under the supervision of a qualified electronics technician.
D. The radio, power supply, speakers, etc. shall be securely fastened so as to remain in place in any road condition.
E. Shall be mounted in a well ventilated dry location

F. The radio shall be installed per manufacturer's installation manuals.
G. The radio shall be mounted so as to be accessible to the driver.
H. The radio shall be located so that the connection to the antenna and ground system is as short and direct as possible.
I. The antenna shall be mounted in free air as much as possible and clear of parallel metal objects.
J. The antenna shall be installed to withstand high winds and rough roads.
K. The highest point on the antenna shall not extend higher than 13 ft 6 in above the ground.
L. If connections are made directly to the battery terminals then a fuse shall be placed in the transceiver negative and positive lead.
M. High quality coaxial cable shall be used (at least 95% shield coverage) located away from the engine control module and other electrical modules.