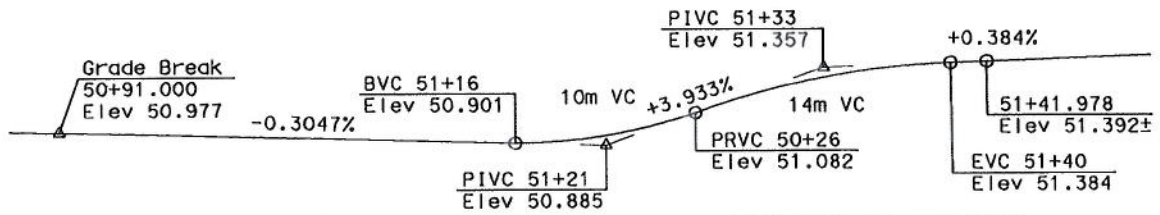

PROFILE GRADE
No Scale

PILE DATA						
LOCATION	DESIGN LOADING	NOMINAL RESISTANCE		DESIGN TIP ELEVATION		SPECIFIED TIP ELEVATION
		COMPRESSION	TENSION	(1)	(2)	
760 Ø CIDH Concrete						
Abut 1	1200 KN	2400 KN	0 KN	+32.0	+37.0	+32.0

Design tip elevation is controlled by the following demands:
(1) Compression, (2) Lateral

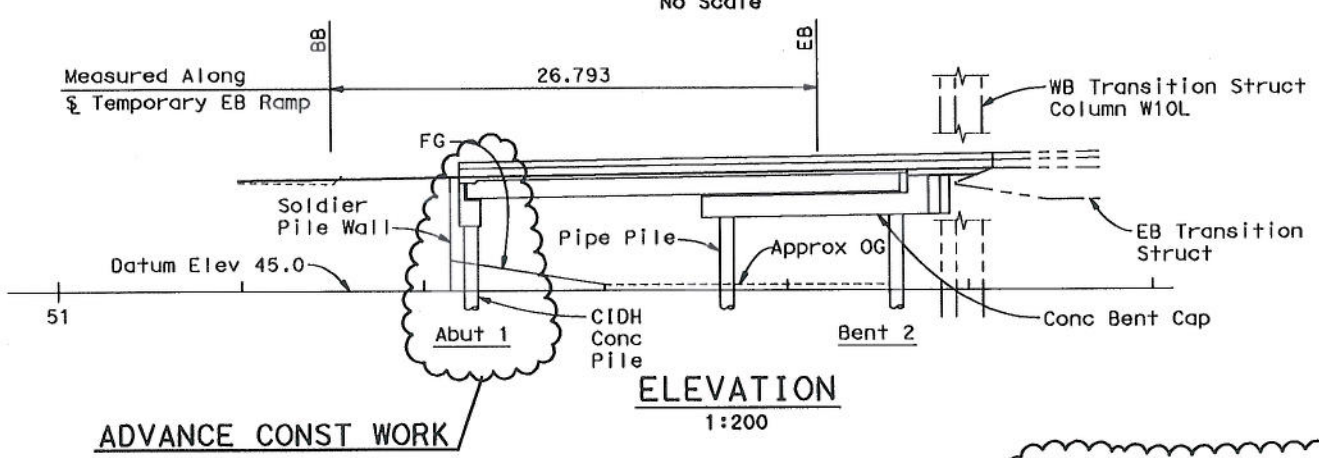

ELEVATION
1:200

ADVANCE CONST WORK

Note: Work shown in addition to that designated as "Advance Const Work" is for informational purposes only.

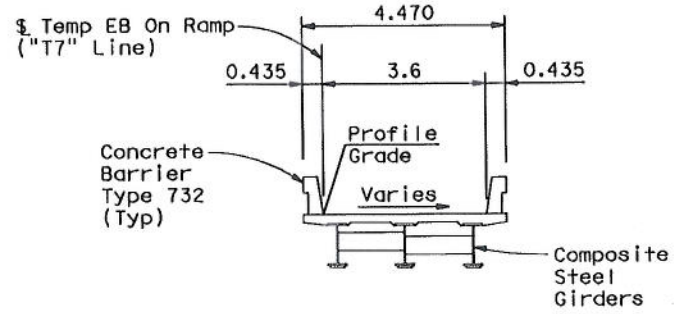

TYPICAL SECTION
1:80

Note:

Abutment 1 is planned for 2 Stage Construction:

- Stage 1 (prior to placing traffic on SSD) to include construction of soldier pile wall and abutment CIDH concrete piles.
- Stage 2 (during demolition of existing bridge) to include excavation and construction of abutment cap.

INDEX TO BRIDGE PLANS

SHEET NO.	TITLE
1	GENERAL PLAN
2	FOUNDATION PLAN
2A	SOLDIER PILE WALL DETAILS
3	ABUTMENT DETAILS
4 & 5	LOG OF TEST BORINGS NO.1 & 2

APPLICABLE STANDARD PLANS (DATED JULY 1999)

A10A	ABBREVIATIONS
A10B	SYMBOLS
A62C	LIMITS OF PAYMENT FOR EXCAVATION AND BACKFILL - BRIDGE
B0-1	BRIDGE DETAILS
B0-5	BRIDGE DETAILS
B2-3	400MM CAST-IN-DRILLED-HOLE CONCRETE PILE

APPROXIMATE BRIDGE QUANTITIES

STRUCTURE EXCAVATION (BRIDGE)	17 M3
STRUCTURE BACKFILL (BRIDGE)	3 M3
FURNISH & INSTALL SOLDIER PILES (HP360 X 108)	38 M
610MM DRILLED HOLE (SOLDIER PILE)	23 M
FURNISH & INSTALL SOLDIER PILES (W610 X 175)	11 M
915MM DRILLED HOLE (SOLDIER PILE)	7 M
760MM CAST-IN-DRILLED-HOLE CONCRETE PILING	33 M
STRUCTURAL CONCRETE, BRIDGE	17 M3
BAR REINFORCING (BRIDGE)	4,500 KG
STEEL PLATE LAGGING	2350 KG

SUPPLEMENTAL SHEET

CONTRACT CHANGE ORDER NO. ____
SHEET ____ OF ____

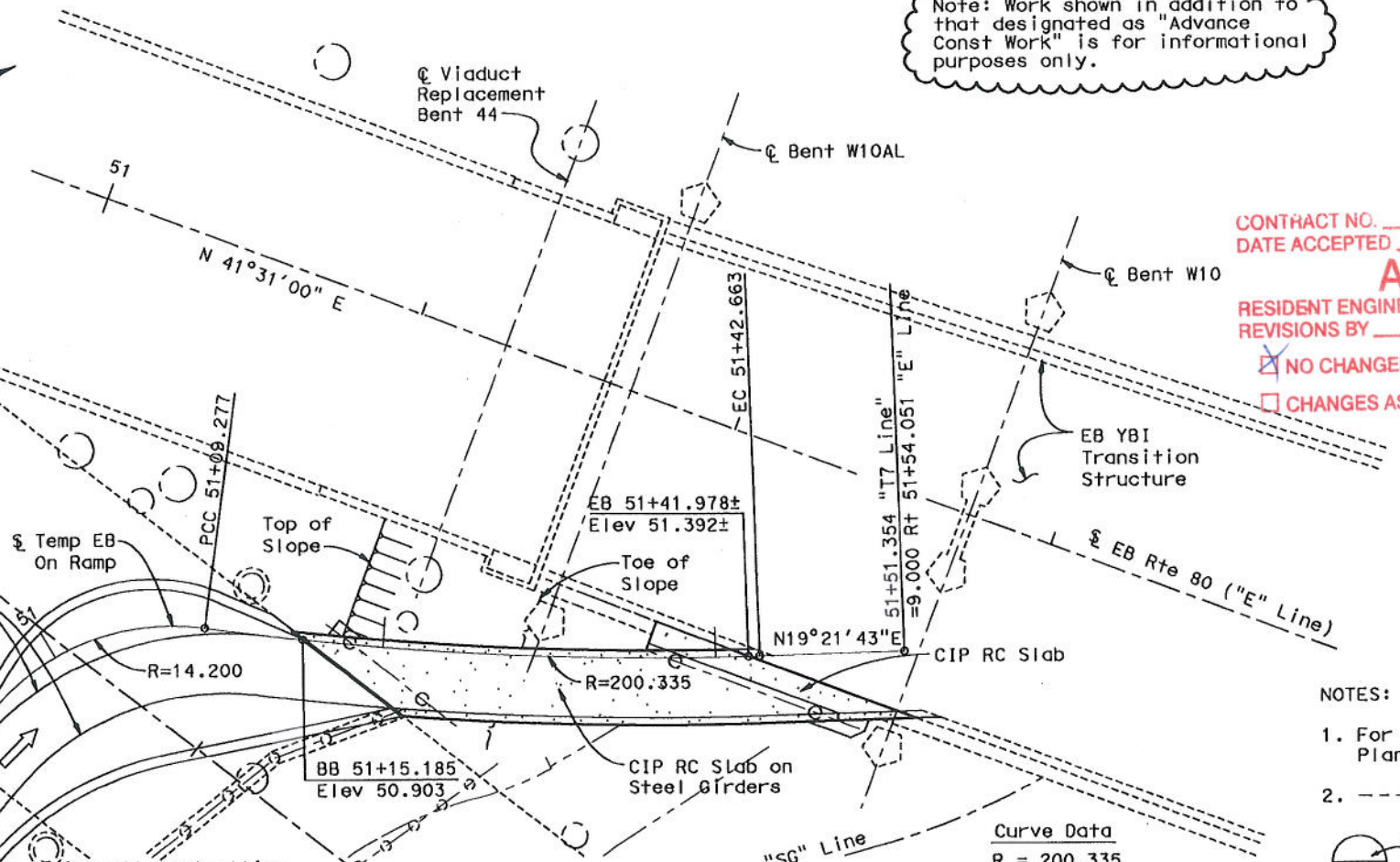

PLAN
1:200

NOTE:
The Contractor shall verify all controlling field dimensions before ordering or fabricating any material or performing any work that might thereby be affected.

Curve Data
R = 200.335
Δ = 9°32'54"
T = 16.732
L = 33.386

NOTES:

1. For General Notes, see "Foundation Plan" sheet.
2. ------ Indicates existing structure.

Standard Plan Sheet No.
Detail No.

ALL DIMENSIONS ARE IN METERS UNLESS OTHERWISE SHOWN

CONTRACT NO. 04-0170R4
DATE ACCEPTED 10-1-2010
AS BUILT
RESIDENT ENGINEER B. CASEY
REVISIONS BY _____ DATE _____
☒ NO CHANGES
☐ CHANGES AS NOTED

Caltrans Metric

DIST.	COUNTY	ROUTE	KILOMETER POST TOTAL PROJECT	SHEET NO.	TOTAL SHEETS
04	SF	80			

A. L. Ely
REGISTERED ENGINEER - CIVIL
REGISTERED PROFESSIONAL ENGINEER — A.L. ELY — No. 18880 — Exp. 6-30-09 — CIVIL — STATE OF CALIFORNIA
PLANS APPROVAL DATE
The State of California or its officers or agents shall not be responsible for the accuracy or completeness of electronic copies of this plan sheet.

T.Y. LIN / MOFFATT & NICHOL
TWO HARRISON STREET
SAN FRANCISCO, CA 94105

SAN FRANCISCO OAKLAND BAY BRIDGE
EAST SPAN SEISMIC SAFETY PROJECT

ADVANCE CONST PACKAGE NO. 3RO

TEMPORARY EB ON-RAMP STRUCTURE

GENERAL PLAN

DESIGN OVERSIGHT	DESIGN	BY Desai	CHECKED Lee	LOAD FACTOR DESIGN	LIVE LOADING: HS20-44 AND ALTERNATIVE AND PERMIT DESIGN LOAD		
JUAN F. CARPIO	DETAILS	BY Samson	CHECKED Desai	LAYOUT	BY Desai	CHECKED Lee	
SIGN OFF DATE	QUANTITIES	BY Desai	CHECKED Lee	SPECIFICATIONS	BY Birdy	PLANS AND SPECS COMPARED Desai	

PREPARED FOR THE STATE OF CALIFORNIA
DEPARTMENT OF TRANSPORTATION

Jal Birdy
PROJECT ENGINEER

BRIDGE NO. 34-006 L/R
KILOMETER POST 12.8

CU 04251
EA 0120S1

DISREGARD PRINTS BEARING EARLIER REVISION DATES →

REVISION DATES (PRELIMINARY STAGE ONLY)										SHEET	OF
12/1/01	5/28/02	12/1/03	5/1/04	12/1/04	1/1/06	12/1/06	1/1/08	6/1/08	8/8/08	1	5

Rev. Date: 5-18-98

ORIGINAL SCALE IN MILLIMETERS FOR REDUCED PLANS 0 10 20 30 40 50 60 70 80 90 100

FILE => p:\4141-06\CADD\Temp EB On Ramp\Adv Const Pkg 3RO\Checked Plans\8-8-08\gp.dgn

Aug 8, 2008

USERNAME => fsamson DATE PLOTTED => 8/8/2008 TIME PLOTTED => 9:17:45 AM

NOTES:

1. For limits of payment for structure excavation and backfill, see A62C

2. For utility locations, see roadway plans.

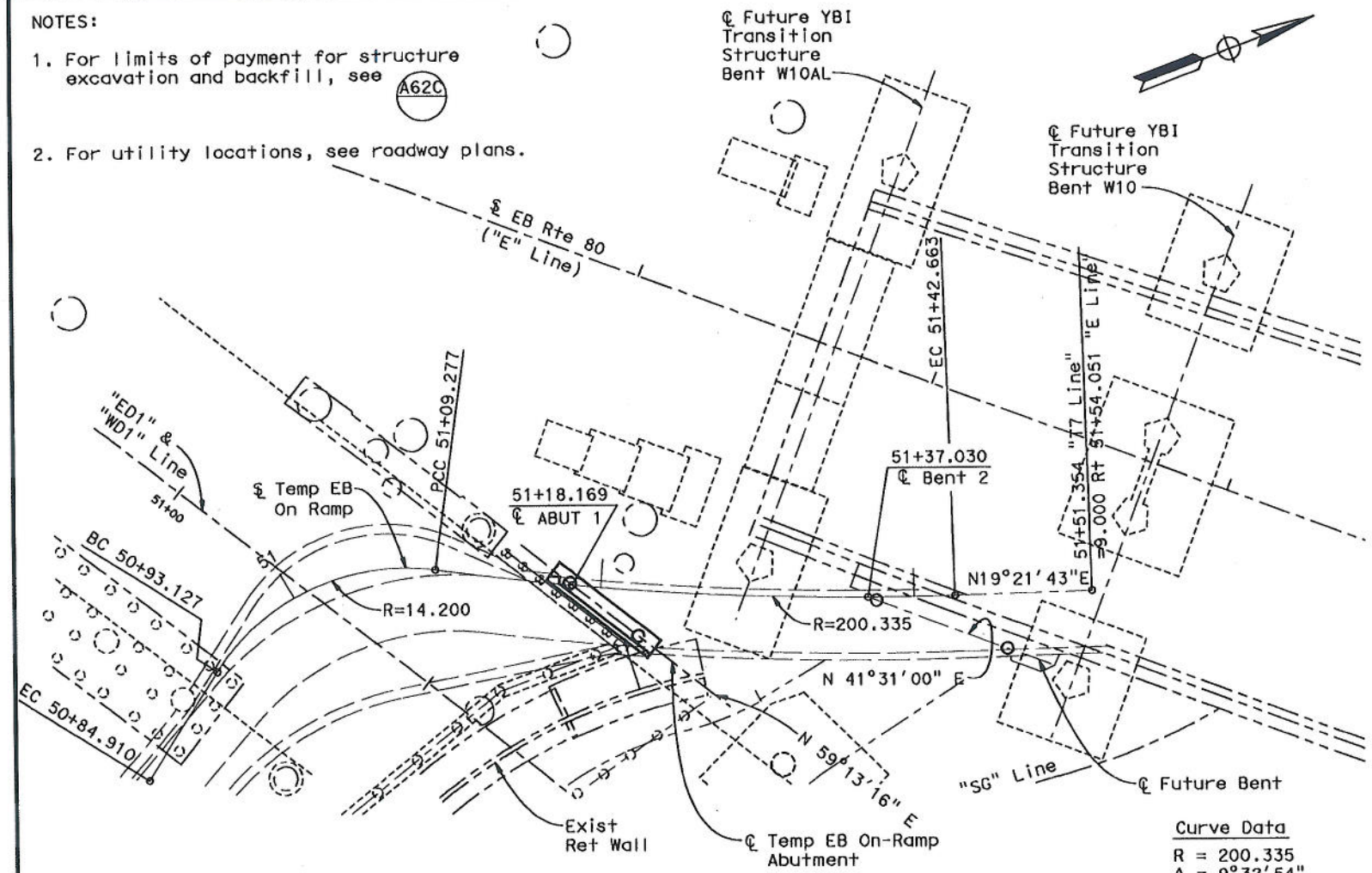

PLAN
1:200

Curve Data
R = 200.335
Δ = 9°32'54"
T = 16.732
L = 33.386

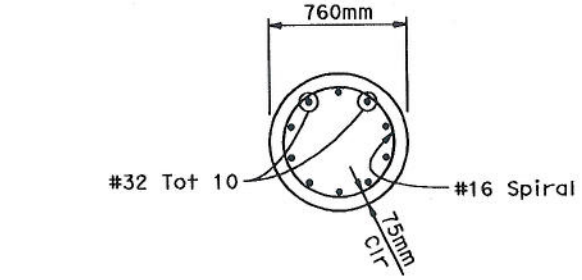

SECTION A-A
NO SCALE

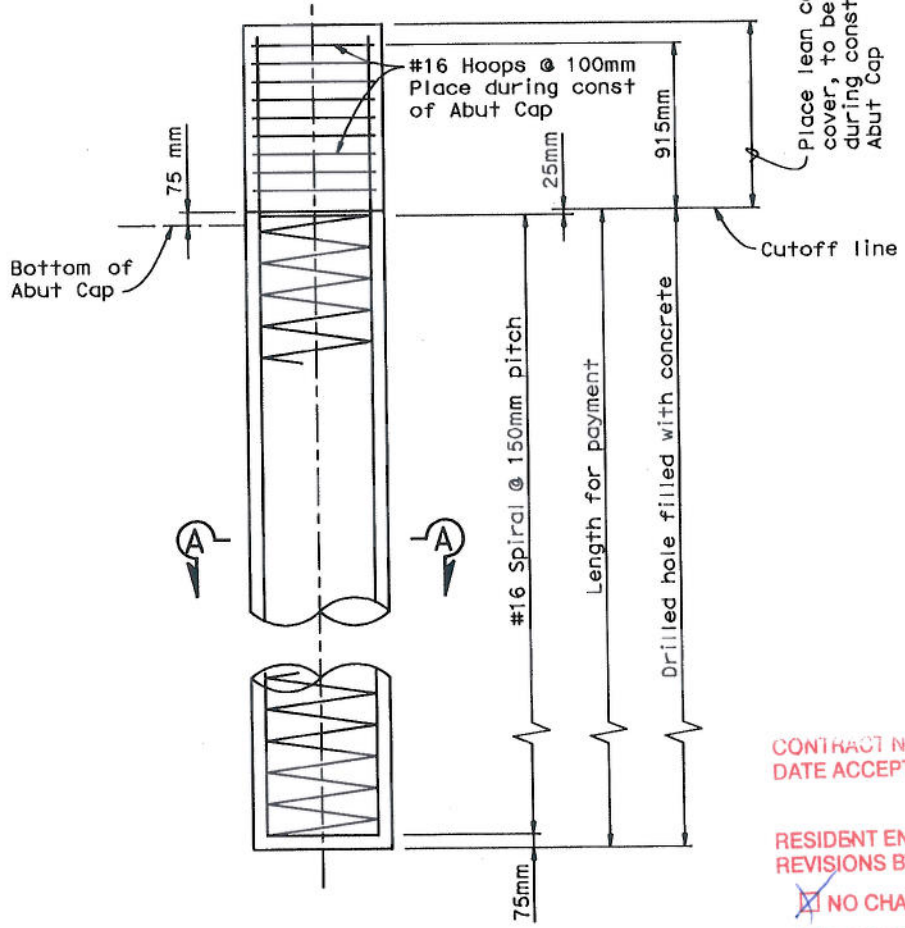

Note:
Hoops shall be continuous, hoop splices shall be ultimate butt splices, see Special Provisions.

760 DIA CIDH CONCRETE PILE
For details not shown, see B2-3
NO SCALE

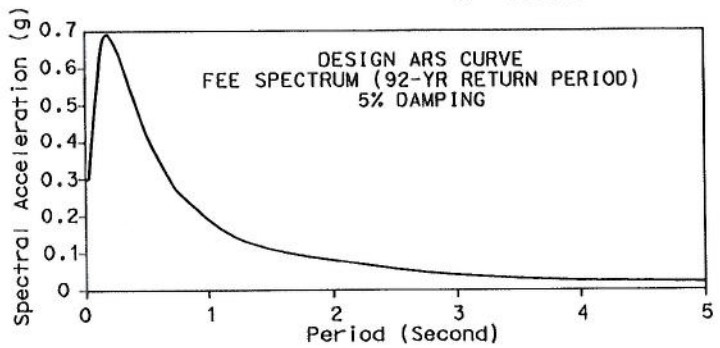

SITE SPECIFIC RESPONSE SPECTRA

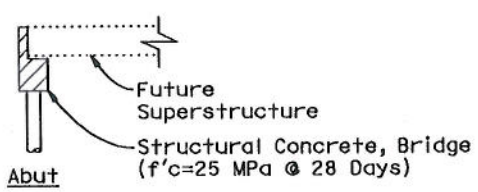

CONCRETE STRENGTH AND TYPE LIMITS
NO SCALE

GENERAL NOTES

Load Factor Design

Design: Caltrans Design Specifications - April 2000 (LFD)
(1996 AASHTO with interims and revision by Caltrans)

Dead load: No allowance for future wearing surface

Live load: HS20-44. No allowance for alternative or permit loads

Seismic loading:
See Site Specific Response Spectra and refer to Fugro - EMI SFOBB Ground Motion Report dated 2001.

Reinforced concrete:
Fy = 420 MPa
F'c = 25 MPa
N = 8

NOTE:
The Contractor shall verify all controlling field dimensions before ordering or fabricating any material or performing any work that might thereby be affected.

ALL DIMENSIONS ARE IN METERS UNLESS OTHERWISE SHOWN

DIST.	COUNTY	ROUTE	KILOMETER POST TOTAL PROJECT	SHEET NO.	TOTAL SHEETS
04	SF	80			

Caltrans Metric

REGISTERED ENGINEER - CIVIL
A.L. ELY No. 18880 Exp. 6-30-09 CIVIL — REGISTERED PROFESSIONAL ENGINEER — STATE OF CALIFORNIA

PLANS APPROVAL DATE

The State of California or its officers or agents shall not be responsible for the accuracy or completeness of electronic copies of this plan sheet.

T.Y. LIN / MOFFATT & NICHOL
TWO HARRISON STREET
SAN FRANCISCO, CA 94105

CONTRACT NO. 04-0120N4
DATE ACCEPTED 10-1-2010
AS BUILT
RESIDENT ENGINEER S. Osby
REVISIONS BY _____ DATE _____
☒ NO CHANGES
☐ CHANGES AS NOTED

SUPPLEMENTAL SHEET

CONTRACT CHANGE ORDER NO. ____
SHEET ____ OF ____

SAN FRANCISCO OAKLAND BAY BRIDGE
EAST SPAN SEISMIC SAFETY PROJECT

ADVANCE CONST PACKAGE NO. 3RO

TEMPORARY EB ON-RAMP STRUCTURE

FOUNDATION PLAN

DESIGN OVERSIGHT	SCALE:	VERT.DATUM	HORZ.DATUM	DESIGN	BY Desai	CHECKED Lee
JUAN F. CARPIO	PHOTOGRAMMETRY AS OF:	ALIGNMENT TIES		DETAILS	BY Samson	CHECKED Desai
SIGN OFF DATE	SURVEYED BY	DRAFTED BY		QUANTITIES	BY Desai	CHECKED Lee
Rev. Date: 5-18-98	FIELD CHECKED BY	CHECKED BY		ORIGINAL SCALE IN MILLIMETERS FOR REDUCED PLANS 0 10 20 30 40 50 60 70 80 90 100		

PREPARED FOR THE STATE OF CALIFORNIA DEPARTMENT OF TRANSPORTATION

Jal Birdy
PROJECT ENGINEER

CU 04251
EA 0120S1

BRIDGE NO. 34-006 L/R
KILOMETER POST 12.8

DISREGARD PRINTS BEARING EARLIER REVISION DATES

REVISION DATES (PRELIMINARY STAGE ONLY): 12/2007 | 12/2007 | 12/2007 | 1/2008 | 1/2008 | 1/2008 | 8/8/08

SHEET 2 OF 5

FILE => p:\4141-06\CADD\Temp EB On Ramp\Adv Const Pkg 3RO\Checked Plans\8-8-08\foundation plan.dgn

Aug 8, 2008 — GEOTECHNICAL PROFESSIONAL APPROVAL DATE

USERNAME => fsamson DATE PLOTTED => 8/8/2008 TIME PLOTTED => 9:17:58 AM

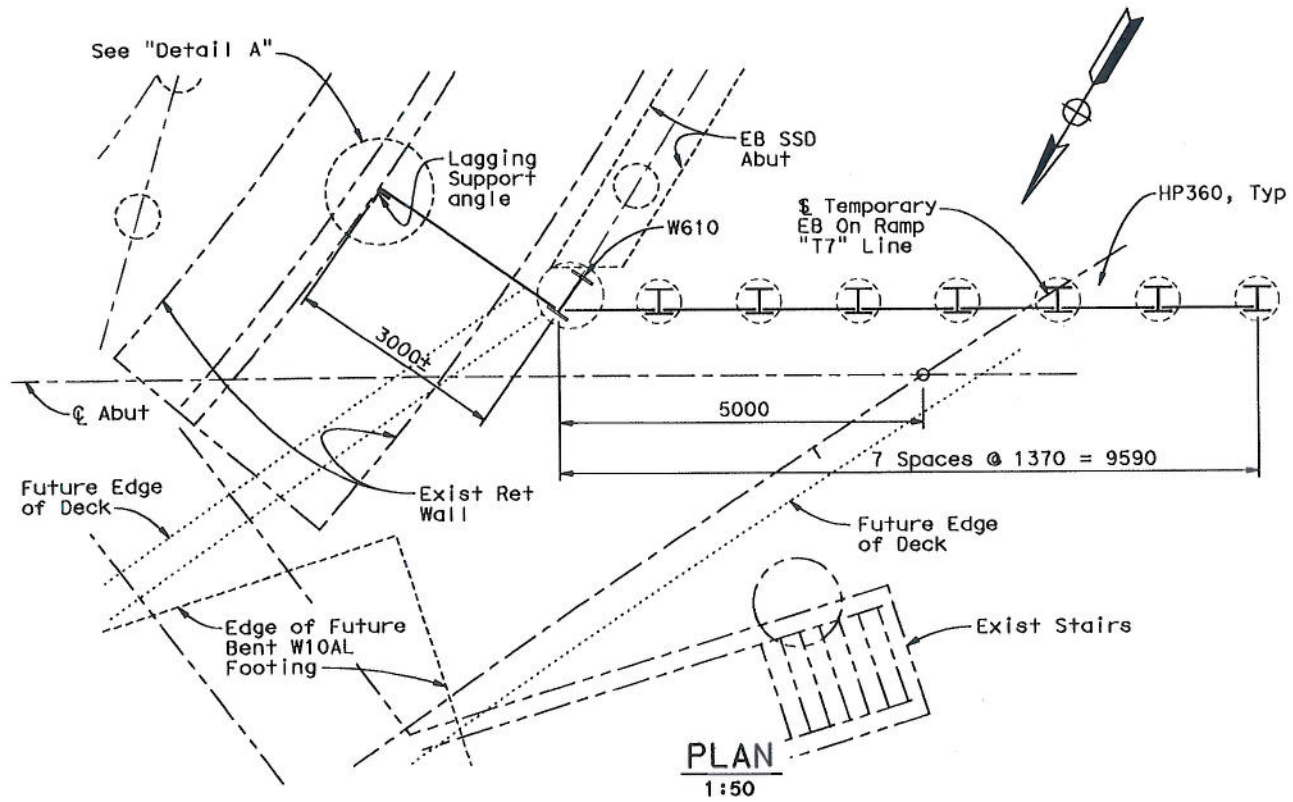

PLAN
1:50

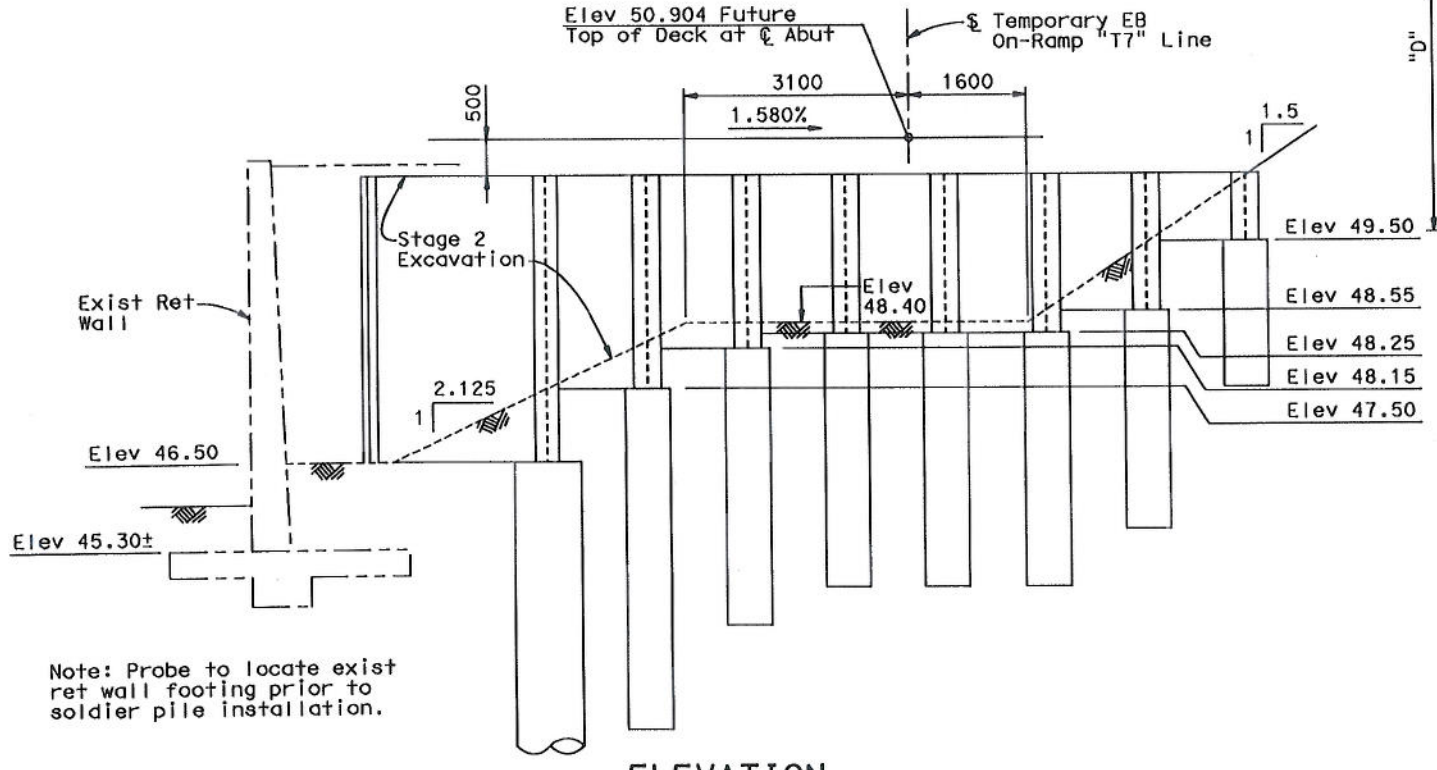

Note: Probe to locate exist ret wall footing prior to soldier pile installation.

ELEVATION
1:50

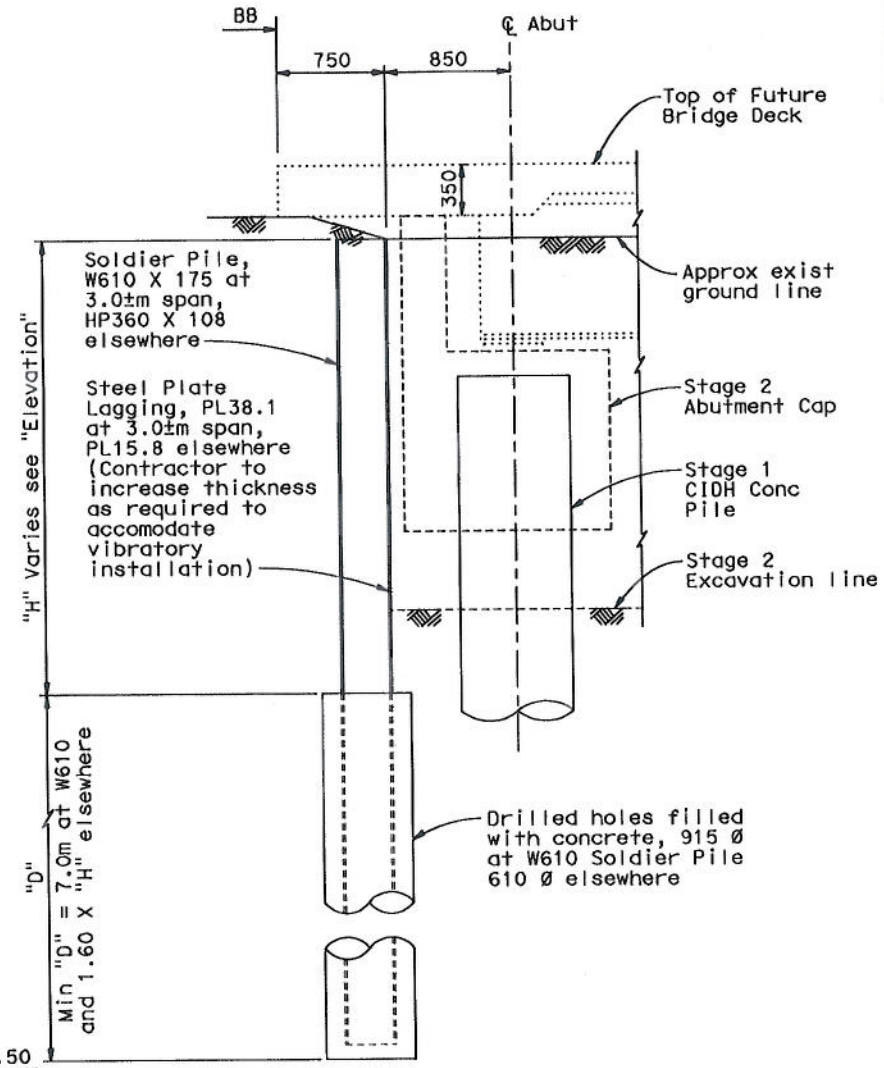

TYPICAL SECTION
1:25

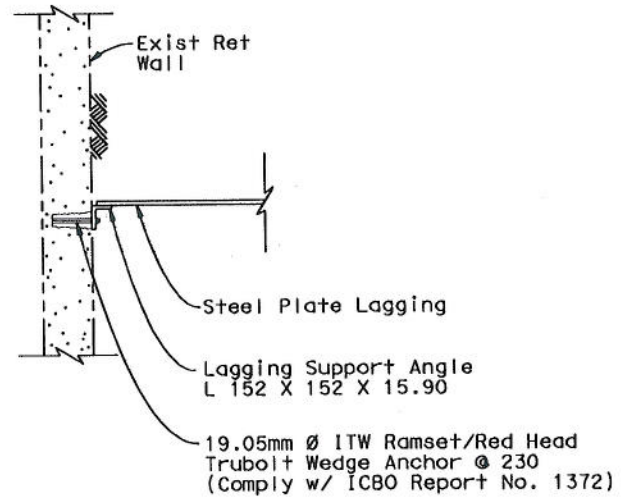

DETAIL A
1:25

NOTE:
The Contractor shall verify all controlling field dimensions before ordering or fabricating any material or performing any work that might thereby be affected.

ALL DIMENSIONS ARE IN MILLIMETERS UNLESS OTHERWISE SHOWN

Caltrans Metric

DIST.	COUNTY	ROUTE	KILOMETER POST TOTAL PROJECT	SHEET NO.	TOTAL SHEETS
04	SF	80			

REGISTERED ENGINEER - CIVIL
A.L. ELY No. 18880 Exp. 6-30-09 CIVIL — REGISTERED PROFESSIONAL ENGINEER — STATE OF CALIFORNIA
PLANS APPROVAL DATE

The State of California or its officers or agents shall not be responsible for the accuracy or completeness of electronic copies of this plan sheet.

T.Y. LIN / MOFFATT & NICHOL
TWO HARRISON STREET
SAN FRANCISCO, CA 94105

CONTRACTOR 04-0120S1
DATE ACCEPTED 6-1-2010
AS BUILT
RESIDENT ENGINEER T. CASEY
REVISIONS BY _____ DATE _____
☒ NO CHANGES
☐ CHANGES AS NOTED

SUPPLEMENTAL SHEET

CONTRACT CHANGE ORDER NO. ____
SHEET ____ OF ____

SAN FRANCISCO OAKLAND BAY BRIDGE
EAST SPAN SEISMIC SAFETY PROJECT

ADVANCE CONST PACKAGE NO. 3RO

TEMPORARY EB ON-RAMP STRUCTURE

SOLDIER PILE WALL DETAILS

DESIGN OVERSIGHT	DESIGN	DETAILS	QUANTITIES
JUAN F. CARPIO	BY Desai	BY Samson	BY Desai
SIGN OFF DATE	CHECKED Lee	CHECKED Desai	CHECKED Lee

PREPARED FOR THE STATE OF CALIFORNIA DEPARTMENT OF TRANSPORTATION

Jal Birdy
PROJECT ENGINEER

BRIDGE NO. 34-006 L/R
KILOMETER POST 12.8

CU 04251
EA 0120S1

DISREGARD PRINTS BEARING EARLIER REVISION DATES

REVISION DATES (PRELIMINARY STAGE ONLY): 12/2007 2/2007 12/2007 2/2008 12/2008 12/2008 12/2008 6/2008

SHEET 2A OF 5

Rev. Date: 5-18-98

ORIGINAL SCALE IN MILLIMETERS FOR REDUCED PLANS 0 10 20 30 40 50 60 70 80 90 100

FILE => p:\4141-06\CADD\Temp EB On Ramp\Adv Const Pkg 3RO\Checked Plans\8-8-08\soldier pile wall det.dgn

Aug 8, 2008

USERNAME => fsamson DATE PLOTTED => 8/8/2008 TIME PLOTTED => 9:17:30 AM

DIST.	COUNTY	ROUTE	KILOMETER POST TOTAL PROJECT	SHEET NO.	TOTAL SHEETS
04	SF	80			

Caltrans Metric

REGISTERED ENGINEER - CIVIL

PLANS APPROVAL DATE

The State of California or its officers or agents shall not be responsible for the accuracy or completeness of electronic copies of this plan sheet.

REGISTERED PROFESSIONAL ENGINEER A.L. ELY No. 18880 Exp. 6-30-09 CIVIL STATE OF CALIFORNIA

T.Y. LIN / MOFFATT & NICHOL
TWO HARRISON STREET
SAN FRANCISCO, CA 94105

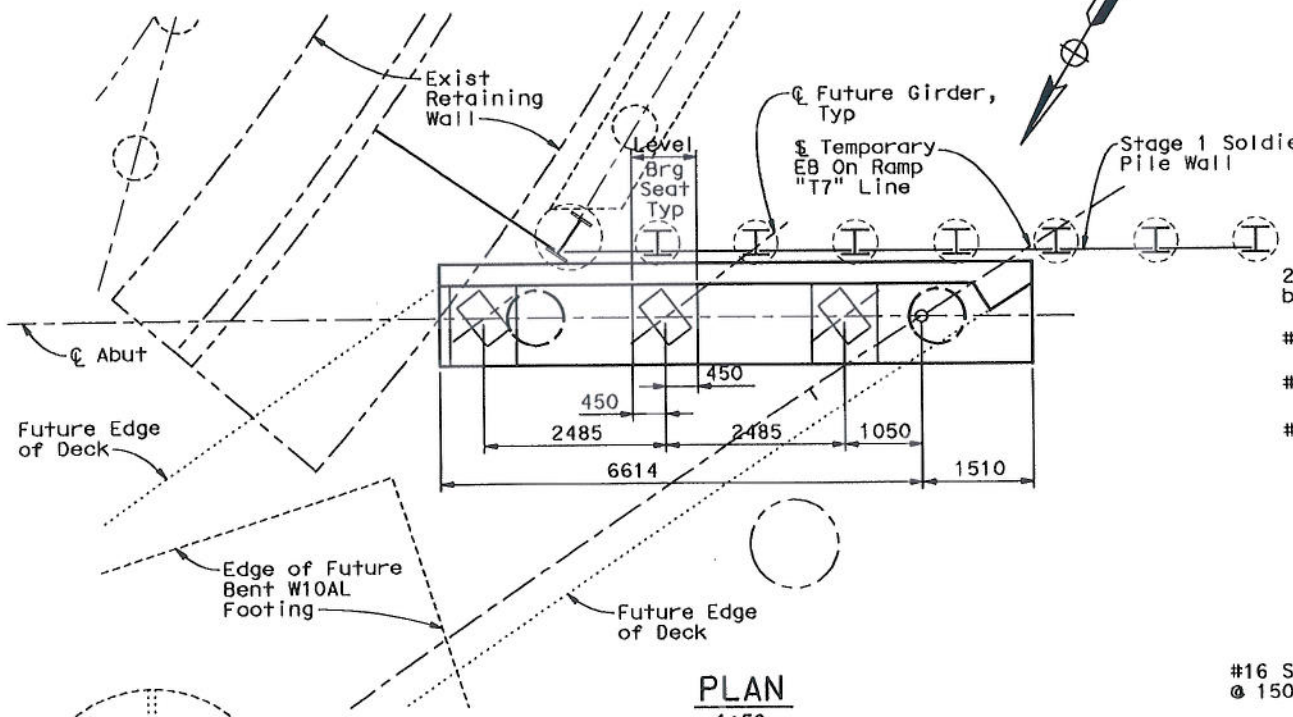

PLAN
1:50

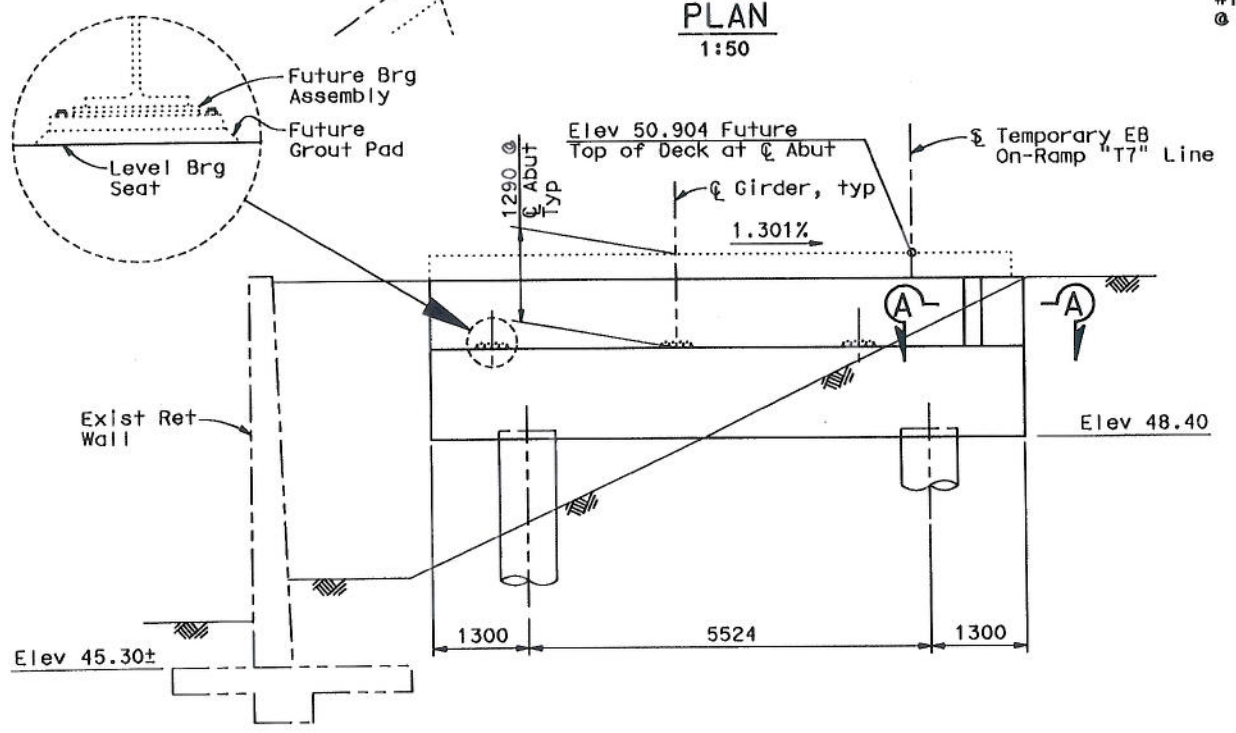

Note: Probe to locate exist ret wall footing prior to pile installation.

ELEVATION
1:50

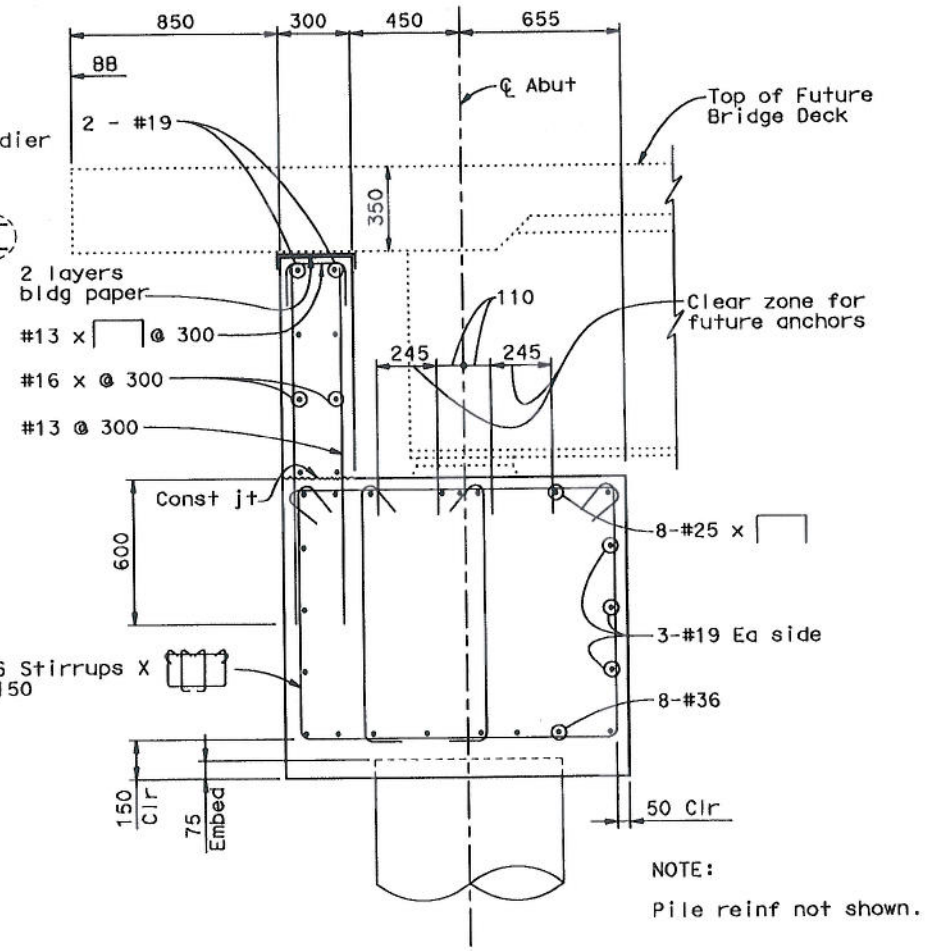

NOTE:
Pile reinf not shown.

TYPICAL ABUTMENT SECTION
1:15

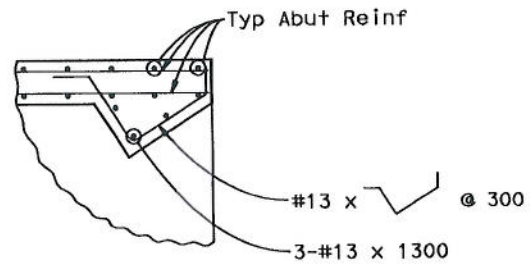

SECTION A-A
1:25

CONTRACT NO. 04-0120124
DATE ACCEPTED 10-1-2010
AS BUILT
RESIDENT ENGINEER R. CASEY
REVISIONS BY _____ DATE _____
☒ NO CHANGES
☐ CHANGES AS NOTED

SUPPLEMENTAL SHEET

CONTRACT CHANGE ORDER NO. ____
SHEET ____ OF ____

NOTE:
The Contractor shall verify all controlling field dimensions before ordering or fabricating any material or performing any work that might thereby be affected.

ALL DIMENSIONS ARE IN MILLIMETERS UNLESS OTHERWISE SHOWN

SAN FRANCISCO OAKLAND BAY BRIDGE
EAST SPAN SEISMIC SAFETY PROJECT

ADVANCE CONST PACKAGE NO. 3RO

TEMPORARY EB ON-RAMP STRUCTURE

ABUTMENT DETAILS

DESIGN OVERSIGHT		DESIGN	BY Desai	CHECKED Lee	PREPARED FOR THE STATE OF CALIFORNIA DEPARTMENT OF TRANSPORTATION	Jal Birdy PROJECT ENGINEER	BRIDGE NO. 34-006 L/R
JUAN F. CARPIO		DETAILS	BY Samson	CHECKED Desai			KILOMETER POST 12.8
SIGN OFF DATE		QUANTITIES	BY Desai	CHECKED Lee			

Rev. Date: 5-18-98

ORIGINAL SCALE IN MILLIMETERS FOR REDUCED PLANS 0 10 20 30 40 50 60 70 80 90 100

CU 04251
EA 0120S1

DISREGARD PRINTS BEARING EARLIER REVISION DATES

REVISION DATES (PRELIMINARY STAGE ONLY) 1/31/07 6/25/07 7/13/07 8/16/07 7/8/08 7/17/08 7/21/08 7/31/08 8/8/08

SHEET 3 OF 5

FILE => p:\4141-06\CADD\Temp EB On Ramp\Adv Const Pkg 3RO\Checked Plans\8-8-08\abt det.dgn

Aug 8, 2008

USERNAME => fsamson DATE PLOTTED => 8/8/2008 TIME PLOTTED => 9:18:09 AM