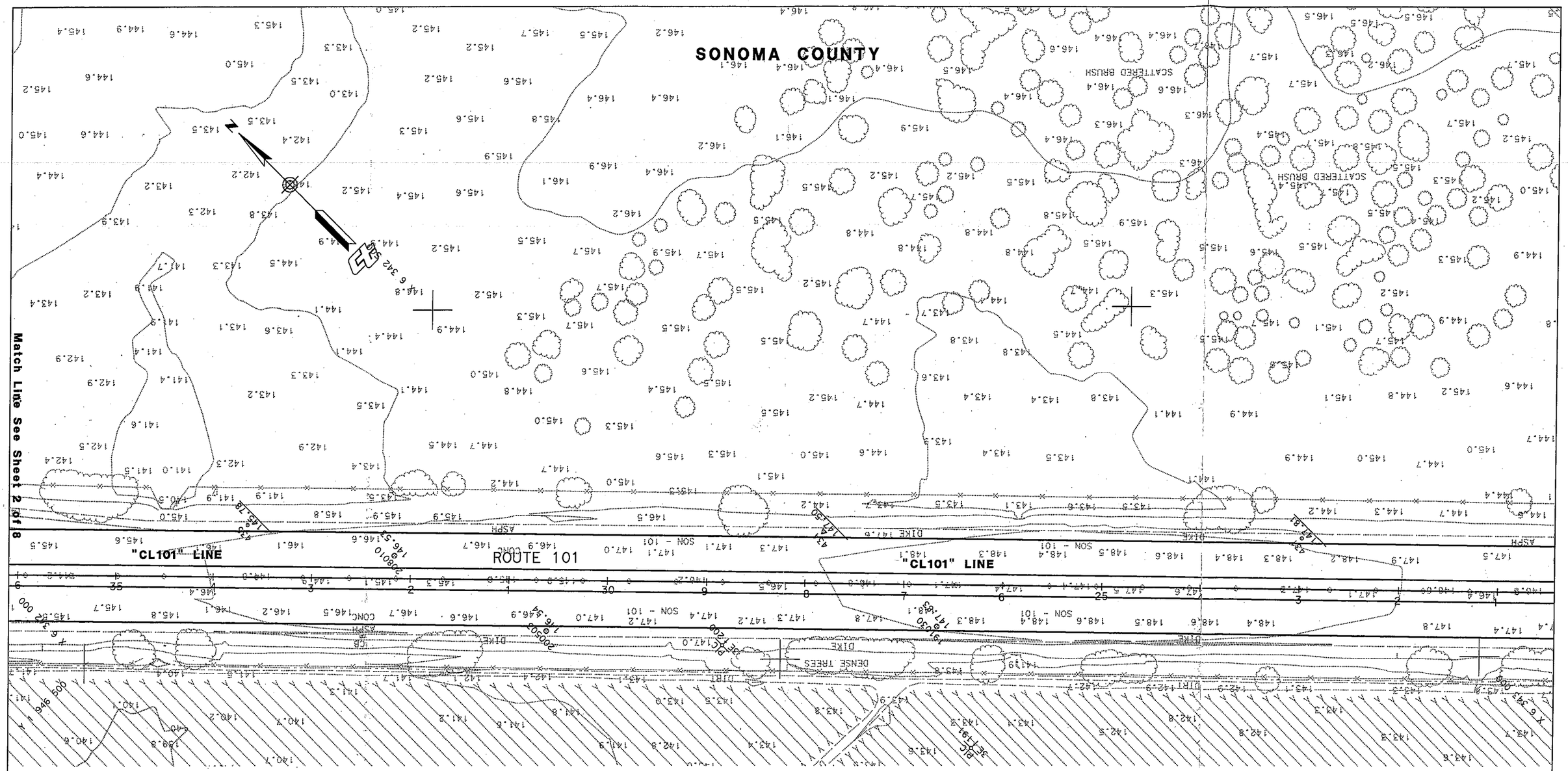

LEGEND:

- Existing R/W
- Proposed R/W
- Metal Beam Guard Rail
- Retaining Wall Easement

ATTACHMENT C

SON-101 PM 25.6/26.9

SCALE: 1":100'

ROUTE 101/AIRPORT BLVD IC PROJECT
LAYOUT SHEET 1 of 8

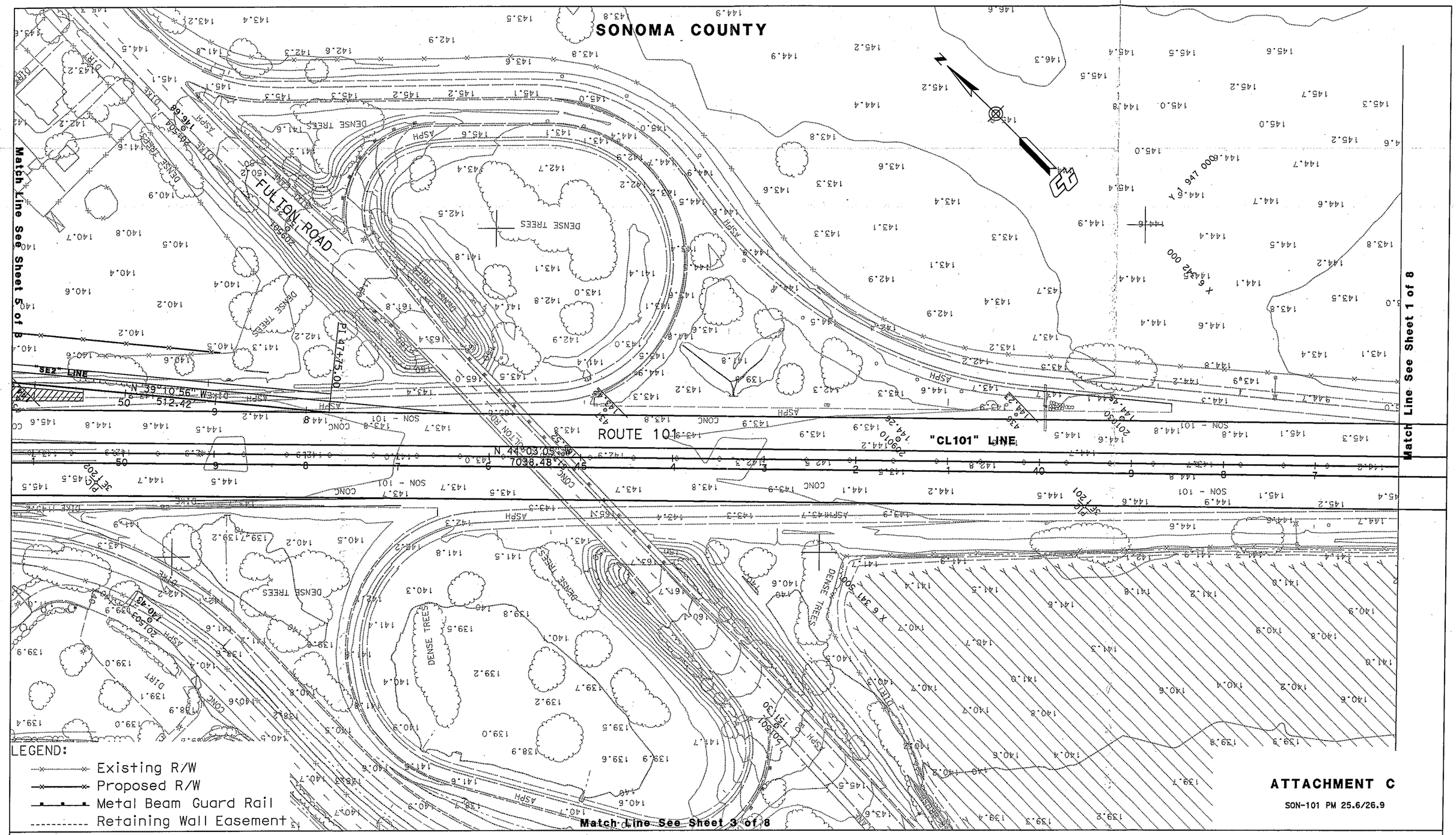

ATTACHMENT C

SON-101 PM 25.6/26.9

SCALE: 1":100'

ROUTE 101/ AIRPORT BLVD IC PROJECT
LAYOUT SHEET 2 of 8

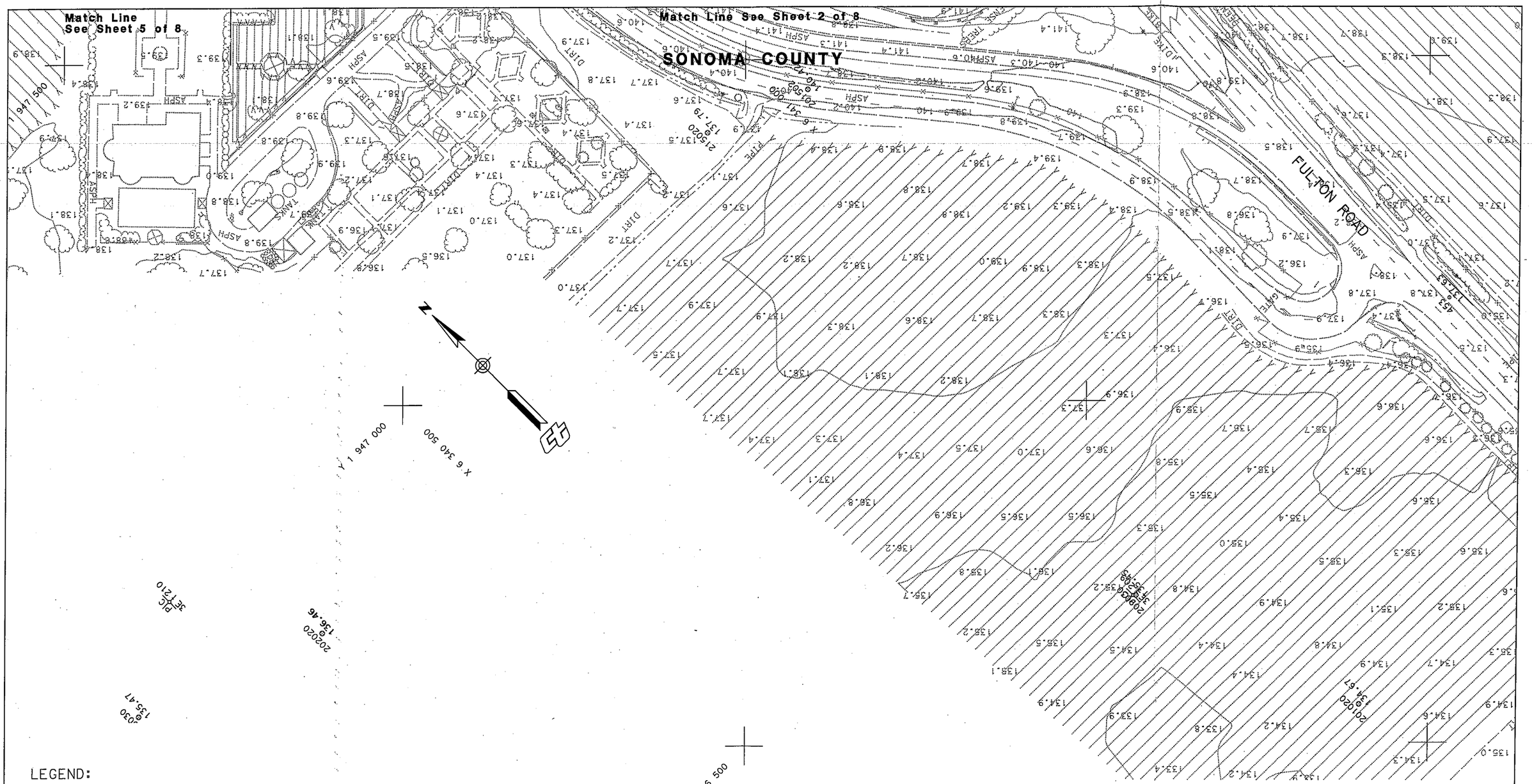

LEGEND:

- Existing R/W
- Proposed R/W
- Metal Beam Guard Rail
- Retaining Wall Easement

ATTACHMENT C

SON-101 PM 25.6/26.9

SCALE: 1":100'

ROUTE 101/ AIRPORT BLVD IC PROJECT
LAYOUT SHEET 3 of 8

SONOMA COUNTY

LEGEND:

- Existing R/W
- Proposed R/W
- Metal Beam Guard Rail
- Retaining Wall Easement
- Retaining Wall

CURVE DATA

No. ⊛	R	Δ	T	L	N	E
1	2000′	6°15′35"	109.36′	218.51′	1837212.82	6059463,53
2	300′	82°38′18"	263.73′	432.69′	1835286.87	6058528.46

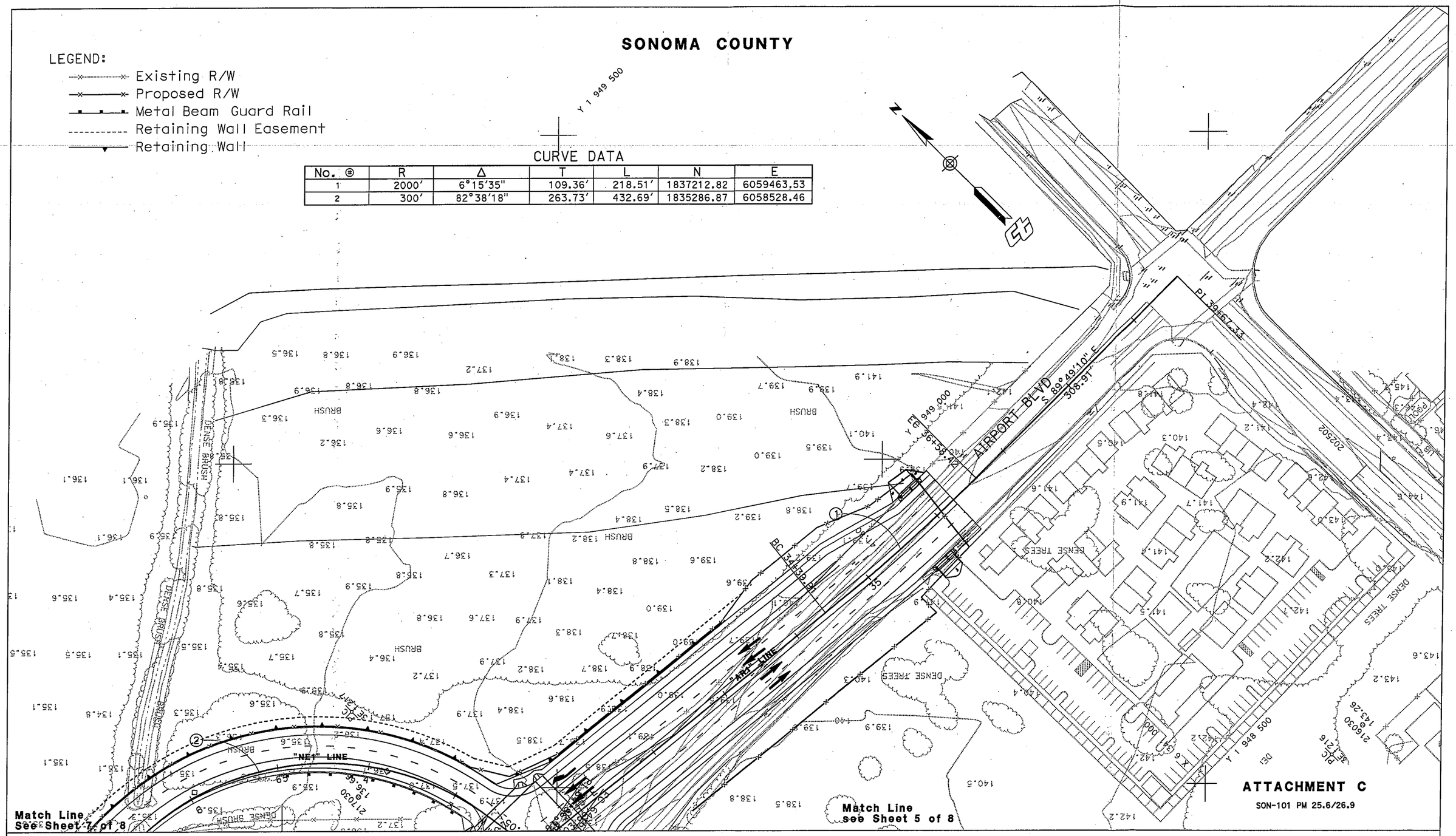

ATTACHMENT C

SON-101 PM 25.6/26.9

SCALE: 1":100′

ROUTE 101/ AIRPORT BLVD IC PROJECT

LAYOUT SHEET 4 of 8

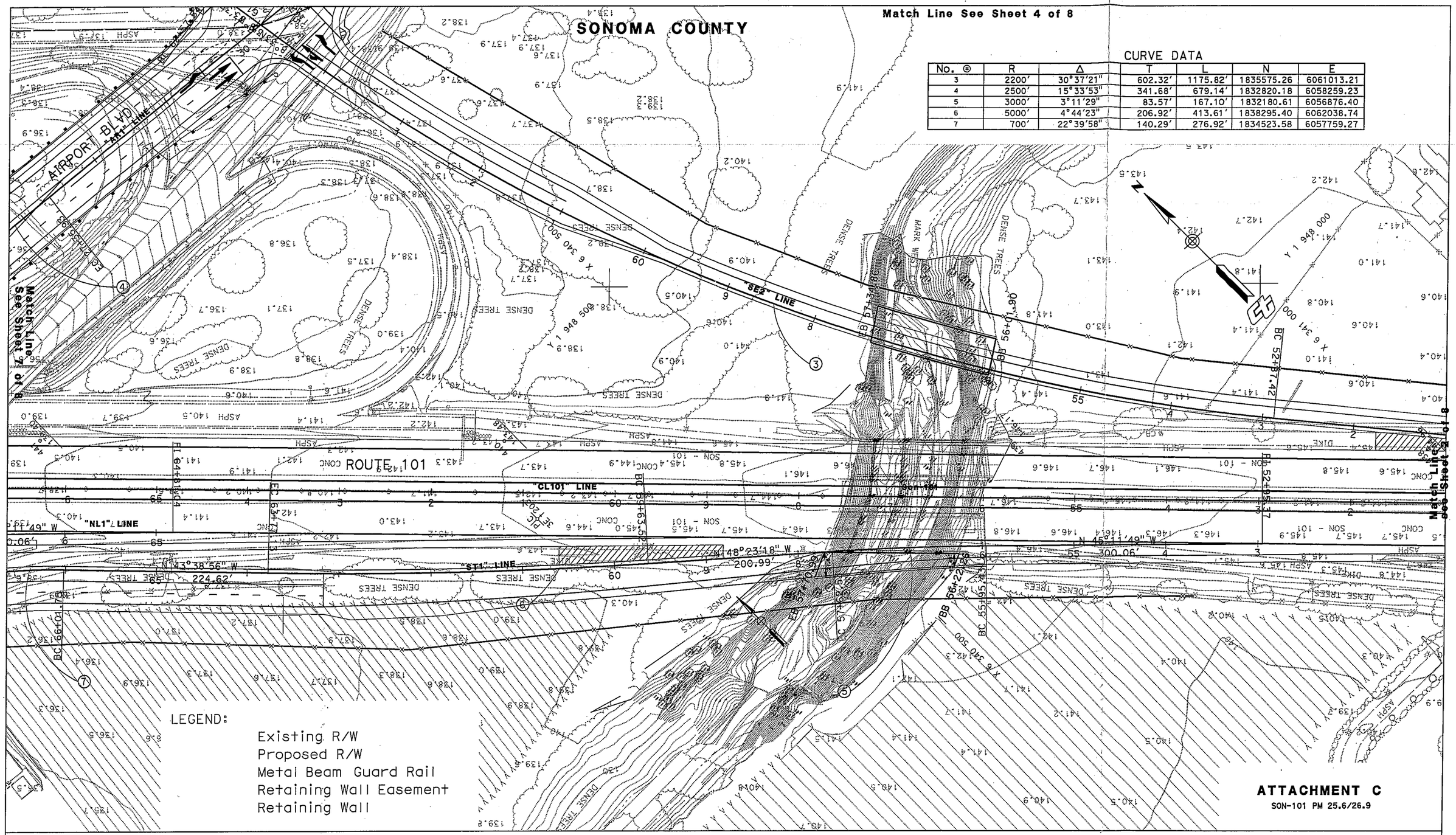

CURVE DATA

No. ⊛	R	Δ	T	L	N	E
3	2200′	30°37′21"	602.32′	1175.82′	1835575.26	6061013.21
4	2500′	15°33′53"	341.68′	679.14′	1832820.18	6058259.23
5	3000′	3°11′29"	83.57′	167.10′	1832180.61	6056876.40
6	5000′	4°44′23"	206.92′	413.61′	1838295.40	6062038.74
7	700′	22°39′58"	140.29′	276.92′	1834523.58	6057759.27

ATTACHMENT C

SON-101 PM 25.6/26.9

SCALE: 1":100′

ROUTE 101/ AIRPORT BLVD IC PROJECT

LAYOUT SHEET 5 of 8

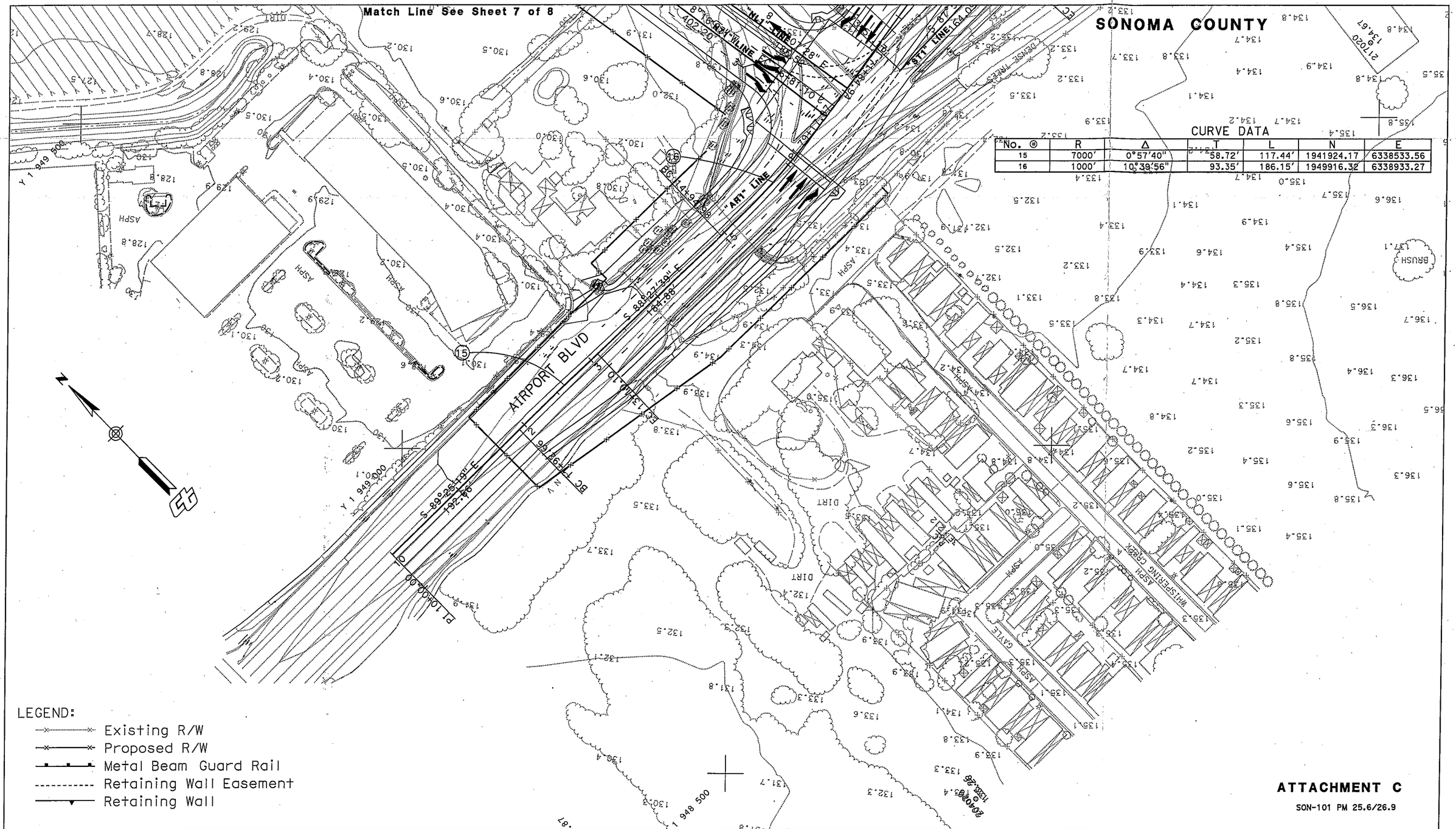

No. ⊕	R	Δ	T	L	N	E
15	7000′	0°57′40"	58.72′	117.44′	1941924.17	6338533.56
16	1000′	10°39′56"	93.35′	186.15′	1949916.32	6338933.27

LEGEND:

- Existing R/W
- Proposed R/W
- Metal Beam Guard Rail
- Retaining Wall Easement
- Retaining Wall

ATTACHMENT C

SON-101 PM 25.6/26.9

SCALE: 1":100′

ROUTE 101/AIRPORT BLVD IC PROJECT
LAYOUT SHEET 6 of 8

CURVE DATA

No. ⊛	R	Δ	T	L	N	E
4	2500′	15°33′53"	341.68′	679.14′	1832820.18	6058259.23
7	700′	22°39′58"	140.29′	276.92′	1834523.58	6057759.27
8	688′	15°56′23"	96.32′	191.40′	1834523.58	6057759.27
9	3000′	3°11′29"	83.57′	167.10′	1833032.77	6056052.00
10	150′	140°44′10"	420.51′	368.45′	1835439.67	6057633.82
11	1000′	29°14′58"	260.94′	510.50′	1835480.97	6056430.53
12	7500′	8°47′00"	576.00′	1149.73′	1841316.24	6062719.67
13	3000′	3°11′30"	83.58′	167.11′	1838072.52	6059668.47
14	850′	42°49′18"	333.30′	635.27′	1836431.89	6058278.01

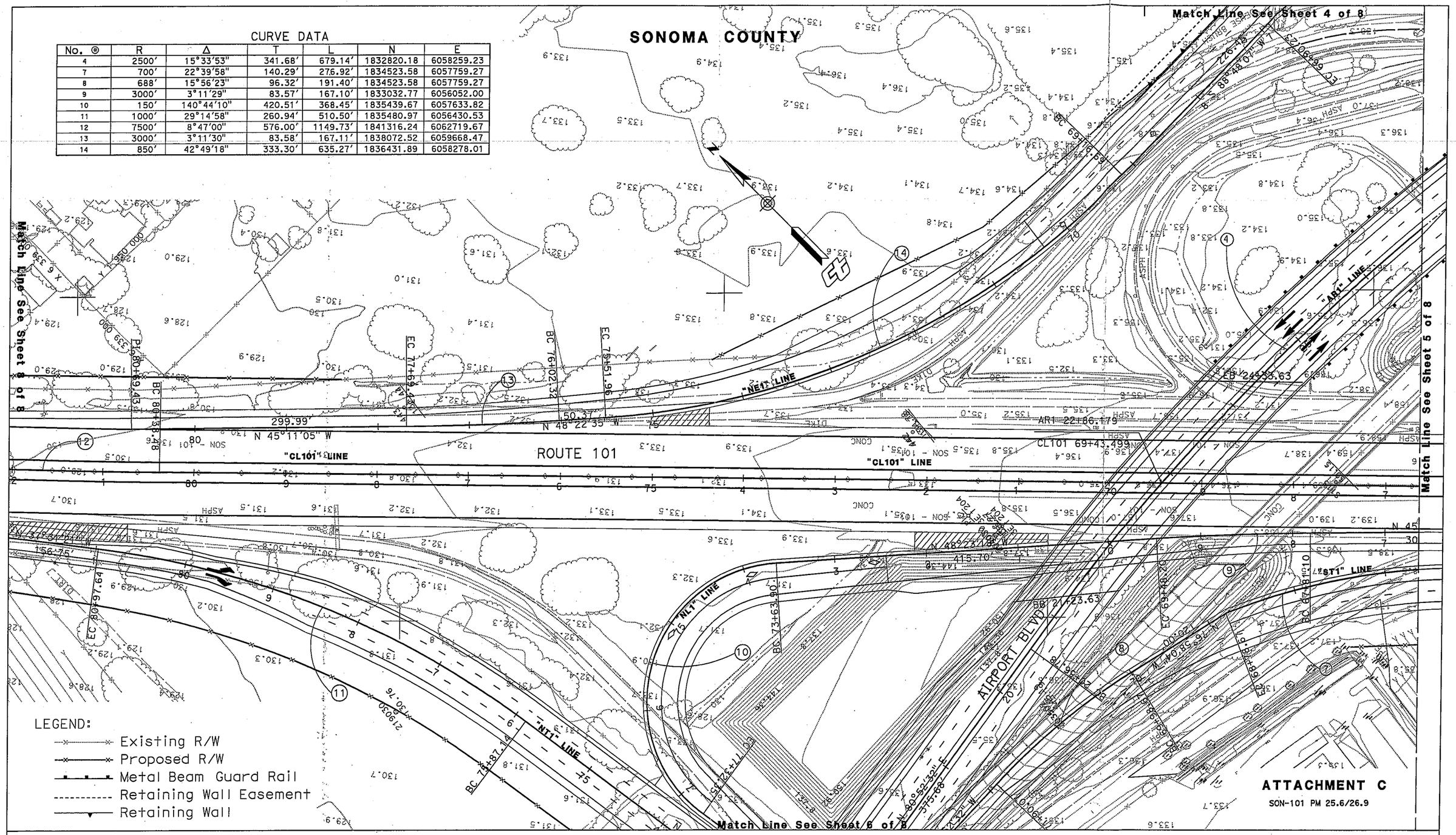

ATTACHMENT C

SON-101 PM 25.6/26.9

SCALE: 1":100′

ROUTE 101/AIRPORT BLVD IC PROJECT

LAYOUT SHEET 7 of 8

CURVE DATA

No. ⊙	R	Δ	T	L	N	E
12	7500′	8°47′00″	576.00′	1149.73′	1841316.24	6062719.67
15	7546′	2°3′39″	135.72′	271.42′	1840810.59	6063113.23

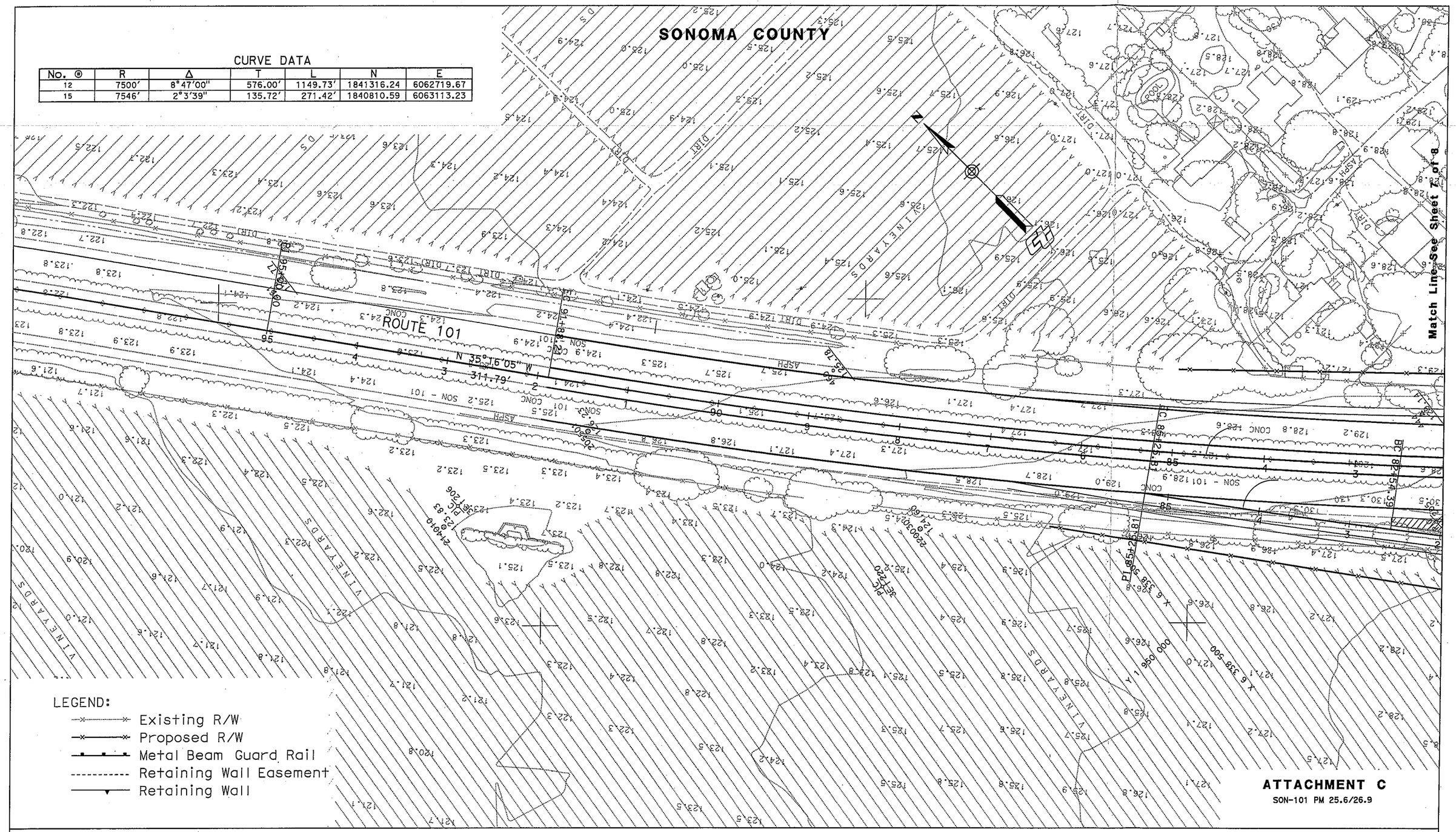

ATTACHMENT C
SON-101 PM 25.6/26.9

SCALE: 1":100′

ROUTE 101/ AIRPORT BLVD IC PROJECT
LAYOUT SHEET 8 of 8

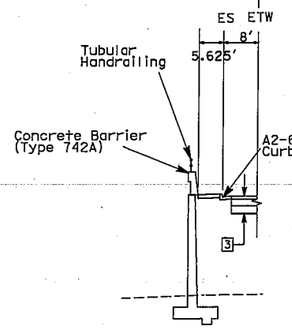

AR1 Line 30+64.30 to 33+50

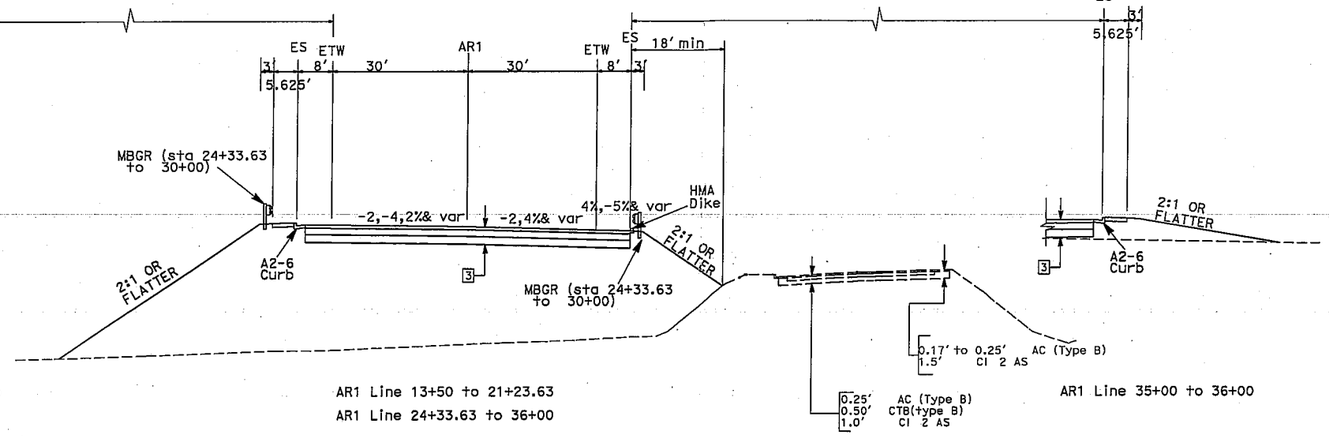

AR1 Line 13+50 to 21+23.63

AR1 Line 24+33.63 to 36+00

AR1 Line 35+00 to 36+00

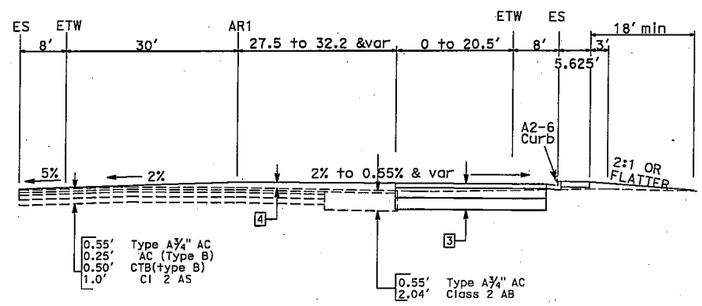

AR1 Line 12+50 to 13+50

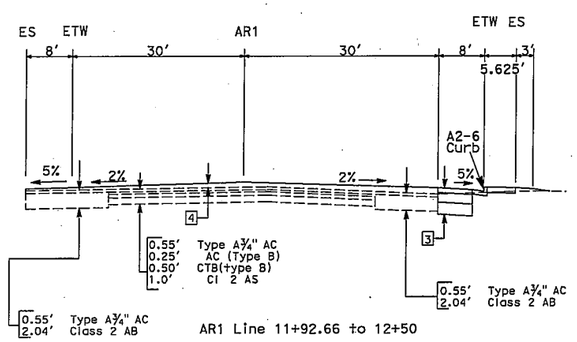

AR1 Line 11+92.66 to 12+50

TYPICAL STRUCTURAL SECTIONS

1. 0.10' OGFC
   0.65' HMA Type A
   0.70' LCB
   1.80' CI 4 AS
2. 0.55' HMA Type A
   0.85' CI 3 AB
   1.25' CI 4 AS
3. 0.55' HMA Type A
   0.95' CI 3 AB
   1.50' CI 4 AS
4. 0.10' HMA Type A
   Var AC leveling

AR1 LINE: TI (20) = 11.5
ESAL = 8,132,439
R-VALUE = 5 (CUT)
=15 (FILL)

RAMPS: TI (20) = 10
ESAL = 873,934
R-VALUE = 5 (CUT)
= 15 (FILL)

ATTACHMENT D

SHEET 1 of 5

No Scale

ROUTE 101\ AIRPORT BLVD IC PROJECT
TYPICAL CROSS SECTIONS
EA : 3A2300

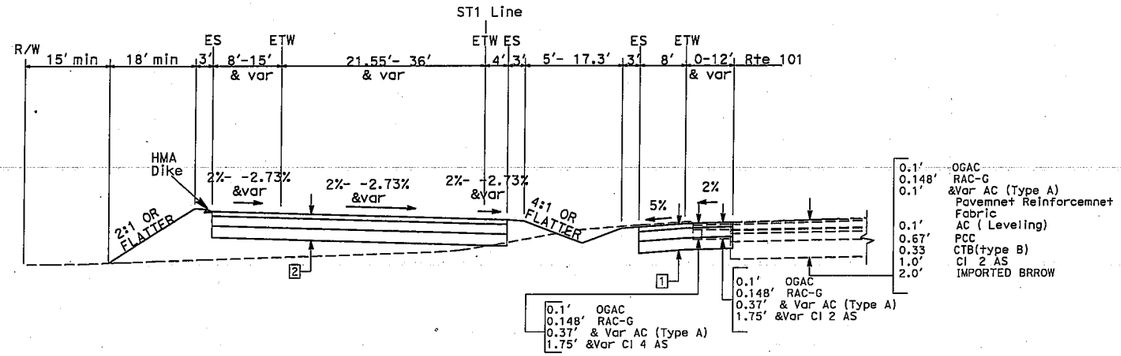

ST1 Line Sta 58+81.65 to Sta 64+82.55

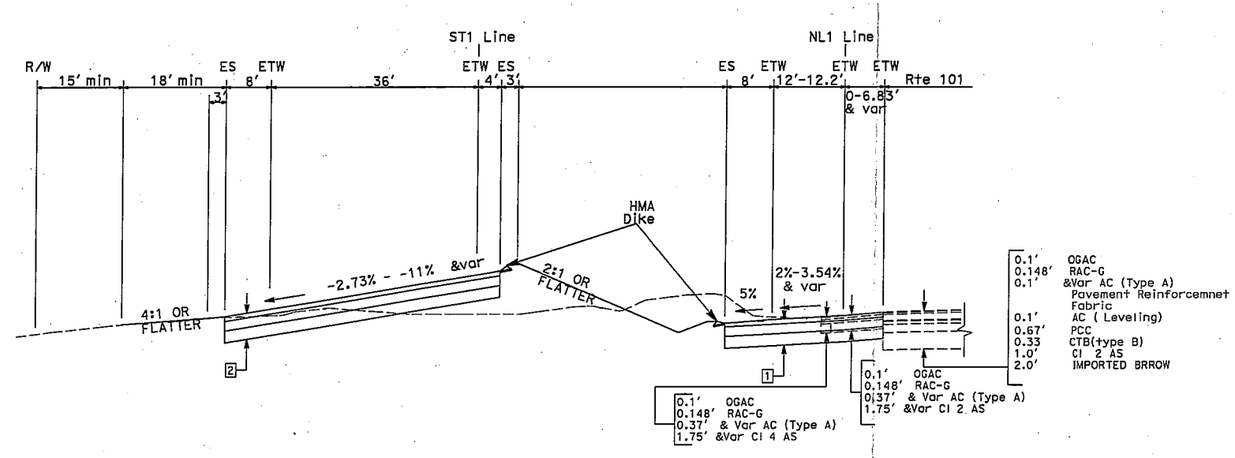

ST1 Line Sta 64+82.55 to Sta 68+00

NL1 Line Sta 64+81.04 to Sta 68+13.84

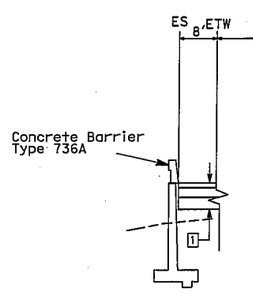

ST1 Line Sta 57+82.82 to Sta 58+50

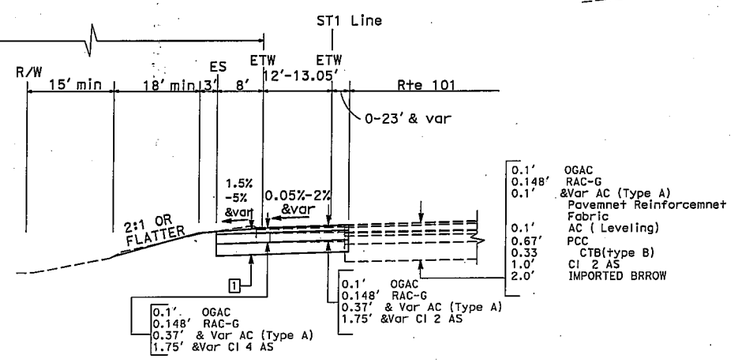

ST1 Line Sta 52+95.37 to Sta 56+21.89
ST1 Line Sta 58+50 to sta 58+81.65

ATTACHMENT D

SHEET 2 of 5

No Scale

ROUTE 101\ AIRPORT BLVD IC PROJECT
TYPICAL CROSS SECTIONS
EA : 3A2300

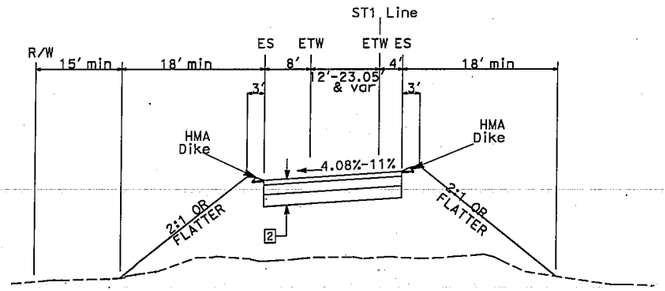

ST1 Line Sta 71+00 to Sta 72+53.82

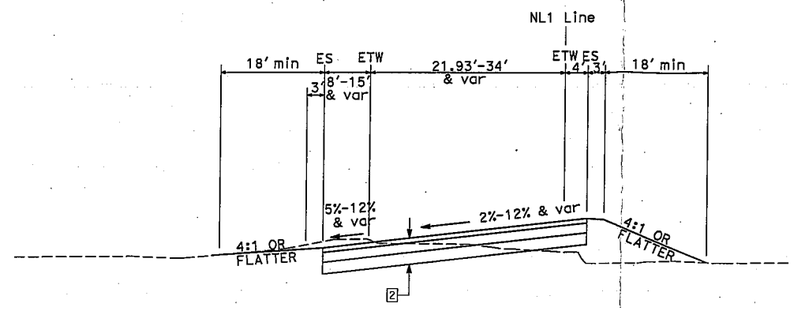

NL1 Line Sta 70+67.02 to Sta 76+74.85

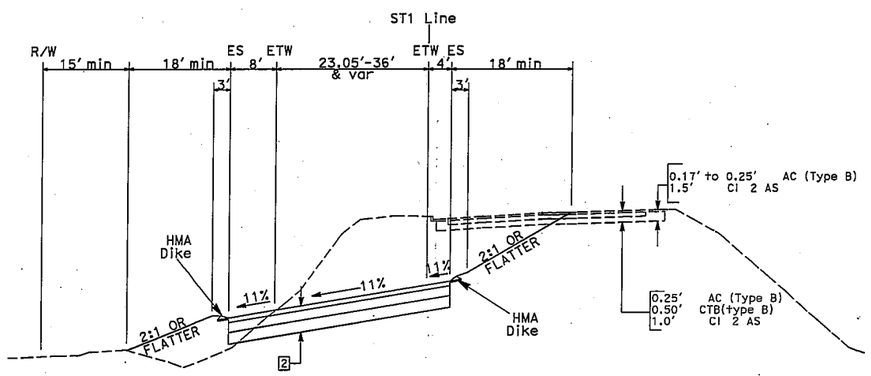

ST1 Line Sta 68+00 to Sta 71+00

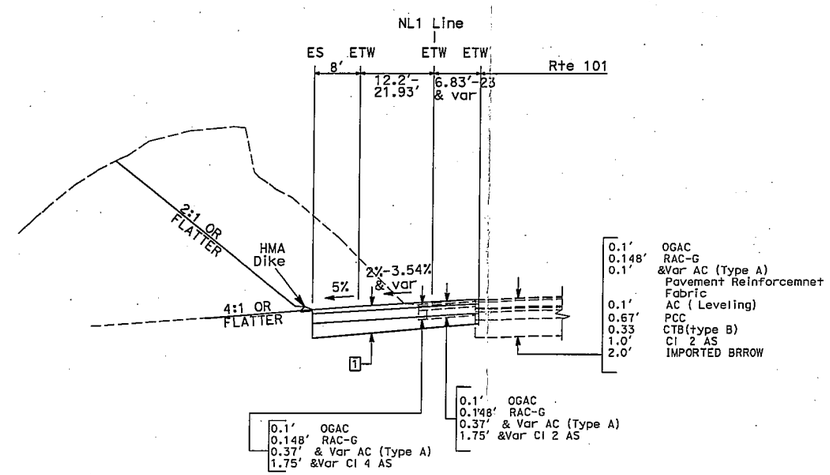

NL1 Line Sta 68+13.84 to Sta 70+67.02

ATTACHMENT D

SHEET 3 of 5

No Scale

ROUTE 101\ AIRPORT BLVD IC PROJECT

TYPICAL CROSS SECTIONS

EA : 3A2300

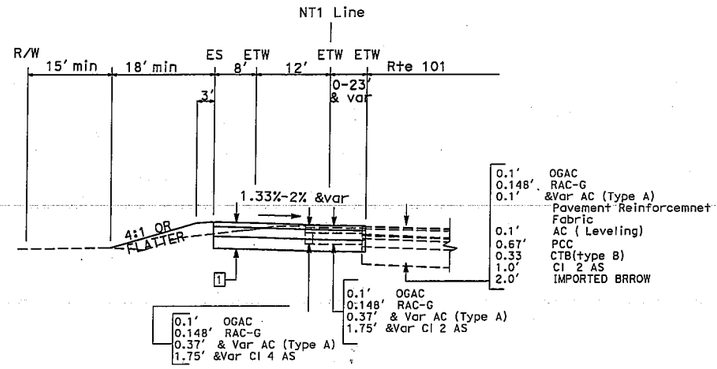

NT1 Line Sta 82+54.39 to Sta 85+25.81

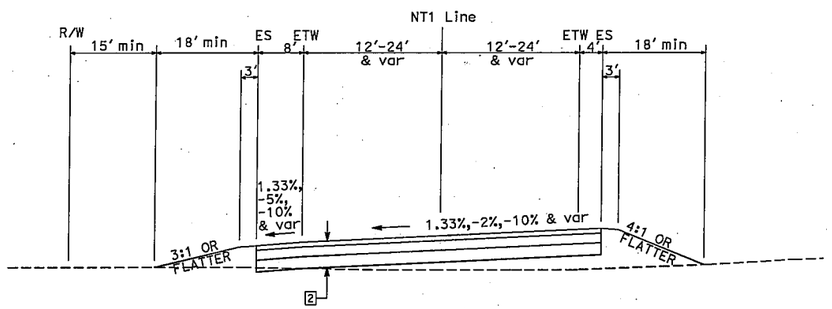

NT1 Line Sta 74+31.37 to Sta 82+54.39

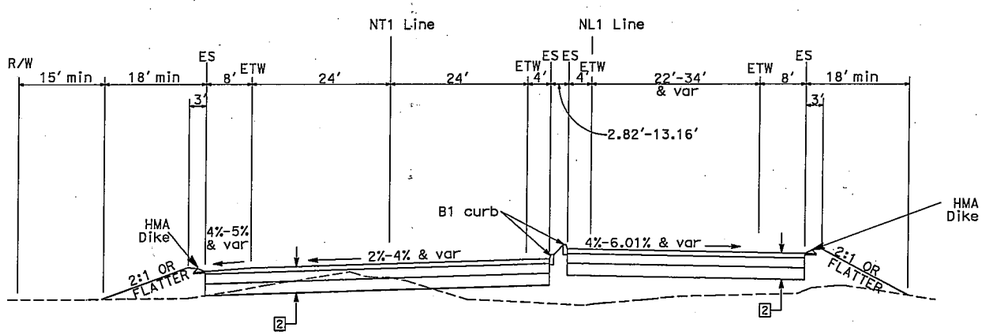

NT1 Line Sta 72+55.04 to Sta 74+31.37

NL1 Line Sta 72+52.32 to Sta 76+74.85 (looking down station)

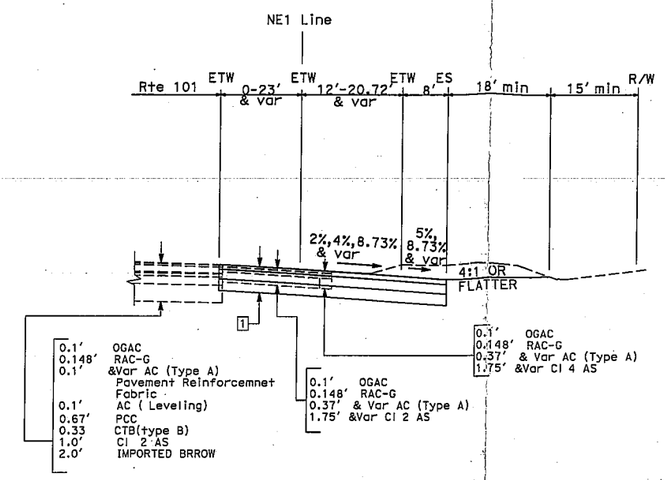

NE1 Line Sta 75+02.4 to Sta 80+69.43

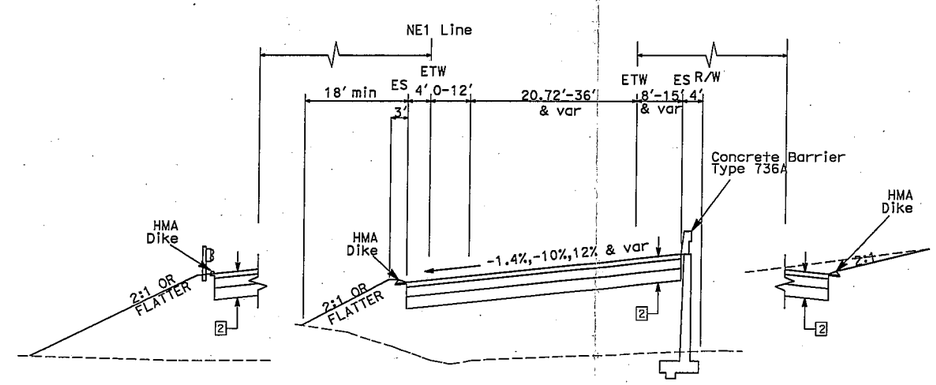

NE1 Line Sta 62+51.1 to Sta 65+00

NE1 Line Sta 62+51.1 to Sta 75+02.4

NE1 Line Sta 68+50 to Sta 75+02.4

ATTACHMENT D

SHEET 4 of 5

ROUTE 101\ AIRPORT BLVD IC PROJECT

TYPICAL CROSS SECTIONS

EA : 3A2300

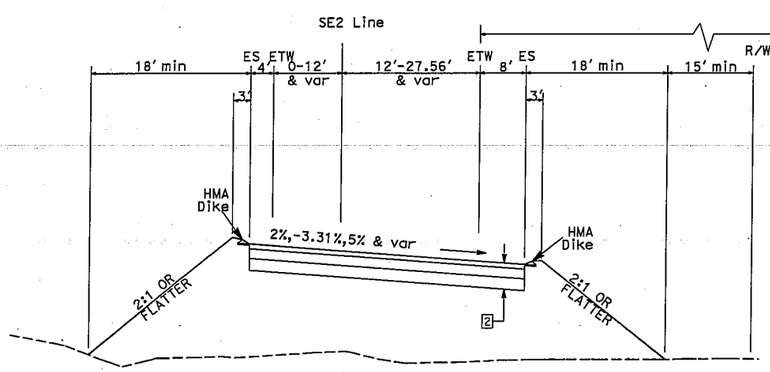

SE2 Line Sta 50+45.64 to Sta 56+01.9
SE2 Line Sta 57+34.86 to Sta 64+00

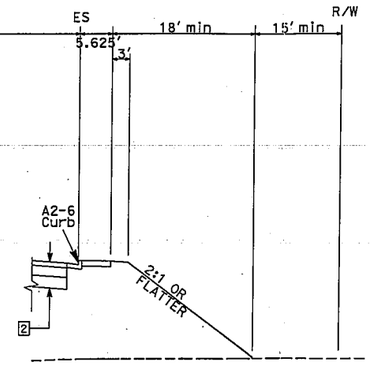

SE2 Line Sta 64+00 to Sta 64+15.67

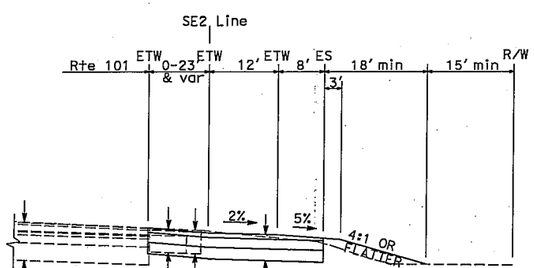

0.1'	OGAC
0.148'	RAC-G
0.1'	&Var AC (Type A) Pavement Reinforcemnet Fabric
0.1'	AC (Leveling)
0.67'	PCC
0.33	CTB(type B)
1.0'	Cl 2 AS
2.0'	IMPORTED BRROW

0.1'	OGAC
0.148'	RAC-G
0.37'	& Var AC (Type A)
1.75'	&Var Cl 2 AS

0.1'	OGAC
0.148'	RAC-G
0.37'	& Var AC (Type A)
1.75'	&Var Cl 4 AS

SE2 Line Sta 47+75 to Sta 50+45.64

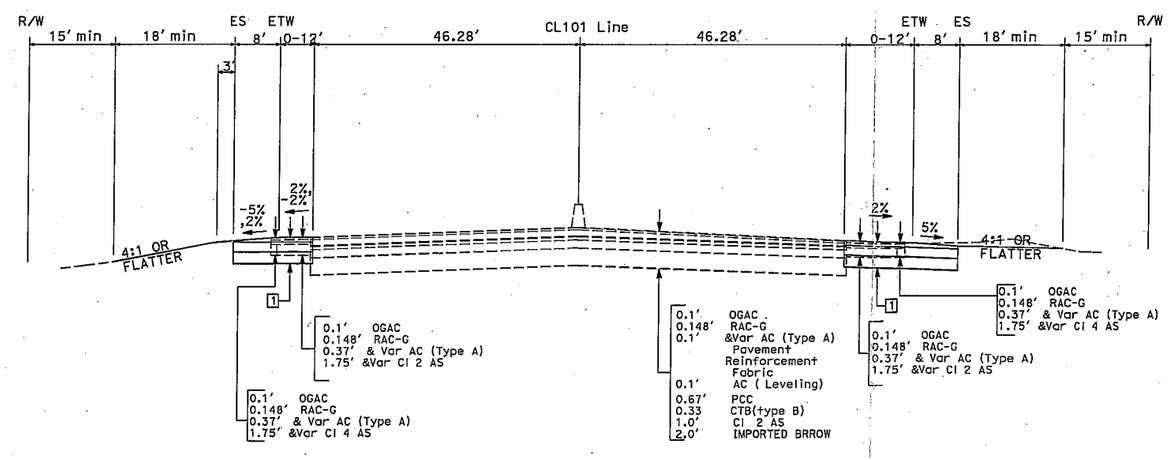

0.1'	OGAC
0.148'	RAC-G
0.37'	& Var AC (Type A)
1.75'	&Var Cl 2 AS

0.1'	OGAC
0.148'	RAC-G
0.37'	& Var AC (Type A)
1.75'	&Var Cl 4 AS

0.1'	OGAC
0.148'	RAC-G
0.1'	&Var AC (Type A) Pavement Reinforcement Fabric
0.1'	AC (Leveling)
0.67'	PCC
0.33	CTB(type B)
1.0'	Cl 2 AS
2.0'	IMPORTED BRROW

0.1'	OGAC
0.148'	RAC-G
0.37'	& Var AC (Type A)
1.75'	&Var Cl 2 AS

0.1'	OGAC
0.148'	RAC-G
0.37'	& Var AC (Type A)
1.75'	&Var Cl 4 AS

CL101 Line Sta 46+95.25 to Sta 52+95.37
CL101 Line Sta 85+25.81 to Sta 86+72.55

CL101 Line Sta 46+35.88 to Sta 47+75
CL101 Line Sta 80+69.43 to Sta 86+71.44

ATTACHMENT D
SHEET 5 of 5

No Scale

ROUTE 101\ AIRPORT BLVD IC PROJECT
TYPICAL CROSS SECTIONS
EA : 3A2300