05 - Mon - 101 - 68.4/70.4
EA 05-0P930K
Program Code: 40.50.400.000
Project id: 050 002 0233
June 2011

PROJECT STUDY REPORT

To

Request Conceptual Approval for a Project Funded by Others

On Route 101

Between 1.0 Mile north of Gloria Road Interchange

And 1.0 Mile south of Gloria Road Interchange

In City of Gonzales

In County of Monterey

APPROVAL RECOMMENDED: _____
DAVE RASMUSSEN, PROJECT MANAGER

APPROVED: _____ 6/29/11
RICHARD KRUMHOLZ *DATE*
DISTRICT DIRECTOR, DISTRICT 5

The technical data contained herein is valid for three years from document approval.

05 - Mon - 101 - 68.4/70.4
EA 05-0P930K
Program Code: 40.50.400.000
Project id: 050 002 0233
June 2011

Vicinity Map

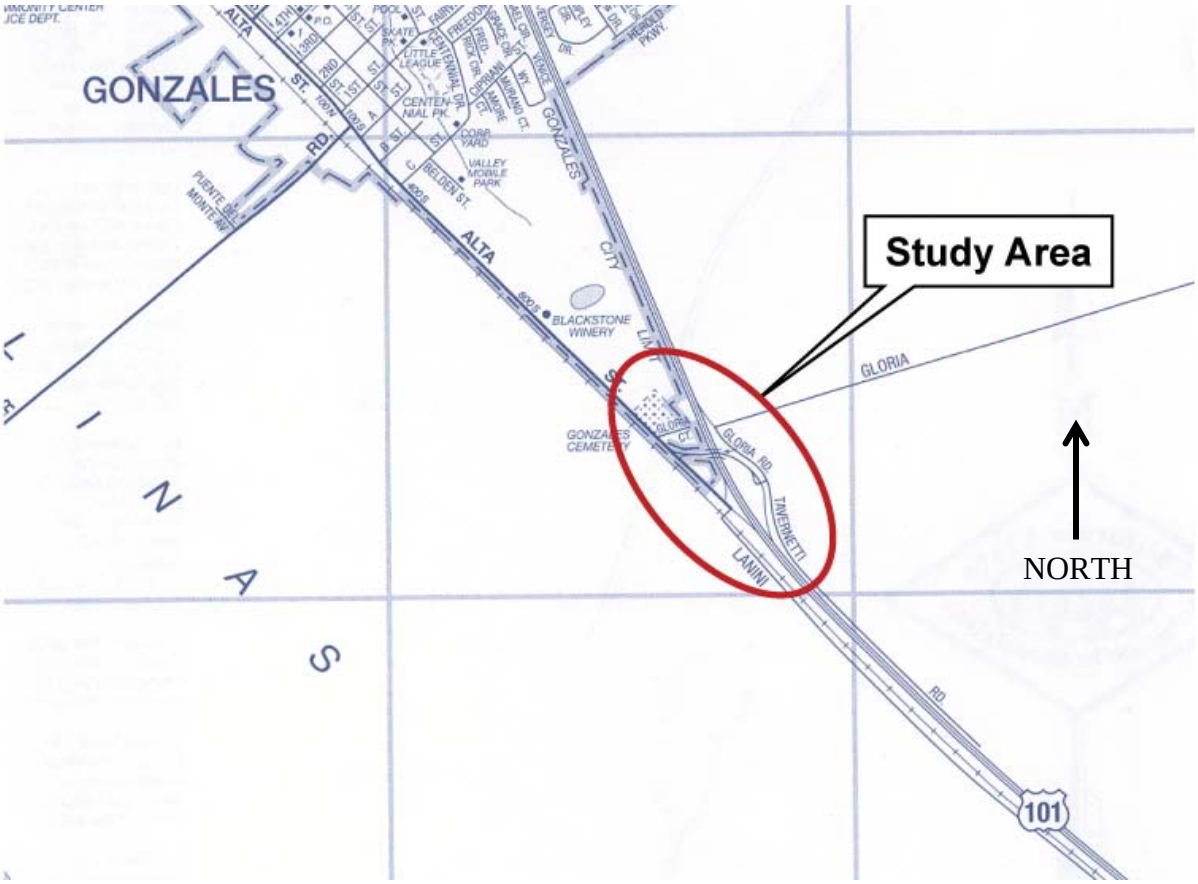

On Route 101

Between 1.0 Mile north of Gloria Road Interchange

And 1.0 Mile south of Gloria Road Interchange

In City of Gonzales

In County of Monterey

05 - Mon - 101 - 68.4/70.4
EA 05-0P930K
Program Code: 40.50.400.000
Project id: 050 002 0233
June 2011

This Project Study Report has been prepared under the direction of the following Registered Engineer. The registered civil engineer attests to the technical information contained herein and the engineering data upon which recommendations, conclusions, and decisions are based.

6/8/2011

REGISTERED CIVIL ENGINEER — DATE

Daniel Y. Ho, PE
Mark Thomas & Company, Inc.
1960 Zanker Road
San Jose, California 95112
(408) 453-5373

REGISTERED PROFESSIONAL ENGINEER
DANIEL HO
NO. 50914
Exp. 9/30/2011
CIVIL
STATE OF CALIFORNIA

Table of Contents

1. Introduction 1
2. Background 2
3. Purpose and Need Statement 5
4. Deficiencies 6
5. Corridor and System Coordination 10
6. Alternatives 12
7. Community Involvement 22
8. Environmental Determination/Document 22
9. Funding 23
   A. Capital Cost 23
   B. Capital Support Estimate 24
10. Schedule 25
11. FHWA Coordination 25
12. Local Entity Contacts/District Contacts 25
13. Project Reviews 26
14. Attachments 26

   A. Project Location Map
   B. Project Vicinity Map
   C. Geometric Plans
   D. Preliminary Cost Estimates
   E. Right-of-Way Data Sheet
   F. Right-of-Way Requirement Map
   G. Advance Planning Study
   H. Preliminary Environmental Analysis Report
   I. Storm Water Data Report (Cover Page Only)
   J. Risk Management Plan Risk Register
   K. Draft Coperative Agreement
   L. Life Cycle Cost Analysis Form
   M. Caltrans Distribution List
   N. Traffic Management Plan Data Sheet/Checklist

1. INTRODUCTION

The project proposes to reconstruct the existing US 101 Gloria Road interchange in the southerly limit of the City of Gonzales. Three alternatives: build, minimum build, and no-build were studied in this Project Study Report (PSR). The build alternative would replace the existing Gloria Road overcrossing with a 5-lane (4 through and 1 left turn lanes) structure at approximately 250 feet north of its current location. The proposed interchange configuration would be a combination of tight diamond in the northbound quadrants and button-hook in the southbound direction. The project is intended to help relieve the anticipated future traffic congestion at the interchange associated with the planned build-out of the 1996 Gonzales General Plan areas and to improve local traffic circulation and connection between the west and east of US 101 in the southeastern part of the City.

This project is in the 2010 Monterey County Regional Transportation Plan constrained project list.

If funding proves to be insufficient, the City may consider phasing the project by constructing the minimum build project which consists of a 4-lane (3 through and 1 left turn lanes) overcrossing and the northbound interchange. Under this scenario, southbound on- and off-ramps would remain as existing. The minimum build alternative will meet the 2035 traffic projection.

The estimated project capital costs for the two alternatives are summarized in the following table. A detailed cost estimate is included as **Attachment D**.

	Build Alternative (Millions)	Minimum Build Alternative (Millions)
Construction	$ 30.2	$22.0
Right-of-way & Utility Relocation	$3.8	$3.0
Total	$34.0 (March 2011)	$25.0 (March 2011)

Anticipated sources for constructing the project will predominantly consist of local development impact and Transportation Agency of Monterey County (TAMC) Regional Development Impact fees. Other potential funding sources include State Transportation Improvement Program (STIP) and Federal Highway Administration.

This document is then intended to be used as a basis for preserving right-of-way for the ultimate interchange improvement.

The City of Gonzales will be the SPONSOR for all work and will be the IMPLEMENTING AGENCY for the Project Approval & Environmental Document (PA&ED), for Plans, Specifications and Estimates (PS&E), for Right of Way and for construction. It is anticipated that Caltrans will be the lead agency under both CEQA and NEPA. The project schedule is summarized as follows:

Phase	**Begin (Month/year) to End (Month/Year)**
PA&ED	1/2013 to 3/2015
PS&E	5/2014 to 10/2015
Construction	2/2016 to 10/2017

This project is classified as Project Development Category 4A. It is anticipated that a Superseded Freeway Agreement will be required.

2. BACKGROUND

Existing Facility

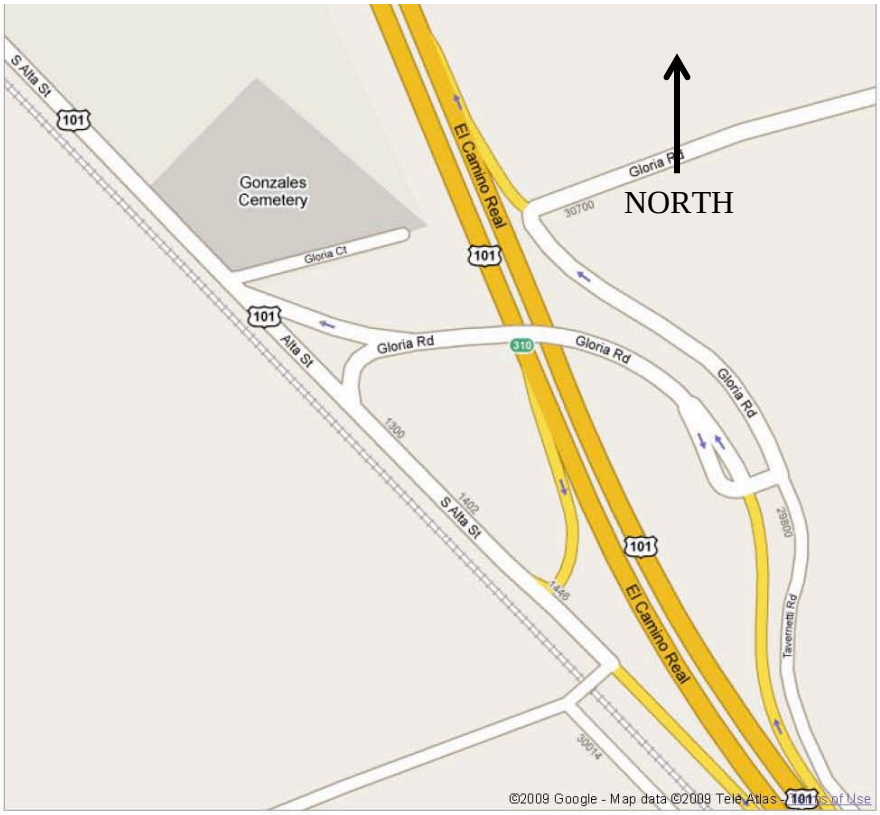

US 101 is a north-south freeway in the Federal Aid Primary System, extending from its origin at the East Los Angeles Interchange in Los Angeles County to the Oregon State Line. The portion from Route 5 near Seventh Street in Los Angeles to near Fell Street in San Francisco was added to the Freeway and Expressway system in 1959. The segment between Santa Barbara County and the San Jose area is named "El Camino Real". It is a primary transportation link between southern and northern California and provides local circulation for various communities in Monterey County.

The project area is predominantly surrounded by farmlands. There is a single family residence located at the northeast corner of the existing US 101/Gloria Road Interchange. On the west side of the freeway, Gonzales Cemetery and an unused portion of the cemetery are located north of the existing overcrossing while two businesses are located south of the overcrossing embankment.

Within the project limits, US 101 is bordered by S. Alta Street and the Union Pacific Railroad (UPRR) tracks to the west and by Tavernetti Road, a frontage road, and a portion of Gloria Road to the east. Gloria Road is an east-west roadway which starts at S. Alta Street, then crosses US 101 on a curved alignment before intersecting with Tavernetti Road. North of Tavernetti Road, Gloria Road becomes a north-south roadway until it becomes an east-west roadway after the NB on-ramp.

US 101 is a 4-lane divided facility with a 46-foot-wide median within the project limits. The northbound and southbound lanes are 12 feet wide with standard inside and outside shoulders. Median concrete barrier and double thrie beam barrier currently separate the northbound and southbound lanes north of the existing interchange. Currently, there is no median barrier south of the overcrossing to the southern limit of the project; however, a future separate project (EA 05-0Q570, PM 61.0/64.6 and 66.8/69.3) plans to install median barrier on US 101 south of the existing interchange. The median is not landscaped. US 101, north of the interchange is on a tangent while to the south, the freeway is on a 4,000-foot-radius horizontal curve. In general, the freeway is higher than the adjacent farmlands by five feet or less. The speed limit on the rural freeway is 70 mph.

The existing US101 Gloria Road interchange was constructed in the early 1960s and it provides full access to US 101 using a modified trumpet (Type L-12) configuration. The configuration consists of a two-lane overcrossing on a curved alignment (R= 550 feet) with single lane on- and off-ramps for all movements. The overcrossing (South Gonzales Overcrossing), PM 69.37, Bridge Number 44-0078, is a four-span, continuous concrete tee beam structure. The interchange currently provides the only access to the southern portions of the City of

Gonzales. Currently stop sign control is provided at the northbound and southbound ramp intersections.

US101 Fifth Street Interchange, PM 70.86, is approximately 1.5 miles north of this interchange. US 101 West Street Interchange (Soledad Prison Overcrossing), PM 66.40, is approximately 3.0 miles south of this interchange.

Gloria Road is a two-lane paved road with no curb, gutter or sidewalk. Drainage sheet flows outward to a drainage ditch north of the road or to adjacent farmlands. The posted speed limit on Gloria Road is 45 mph.

S. Alta Street is a two-lane paved road with no curb, gutter or sidewalk. Drainage sheet flows outward to a drainage ditch east of the road or to the UPRR right of way west of the road. South of the interchange, S. Alta Street becomes Lanini Road as it crosses the UPRR tracks. The posted speed limit on S. Alta Street is 35 mph.

Tavernetti Road is a two-lane dirt road serving farmlands east of the freeway. This frontage road is separated from the freeway by a chain link fence. The posted speed limit on Tavernetti Road is 35 mph.

A drainage system flows northwesterly, bisecting the project area, and ultimately to Gonzales Slough located on the northwest area of the interchange. The ditch begins along the east side of Tarvenetti Road in the southeast quadrant of the interchange, continues along the north side of Gloria Road after the Gloria Road /northbound off-ramp/Tarvenetti Road intersection, and flows along the west side of the freeway to Gonzales Slough after crossing the freeway in a double reinforced concrete pipe system. The ditch is about six to ten feet wide from bank to bank with relatively steep, 3-foot high, side slopes. The ditch in the northwest portion of the project area is located within the 100-year floodplain.

Project History

The 2005 Monterey County Regional Transportation Plan included this project as part of the constrained project list.

The City of Gonzales started the project initiation phase in Summer 2006.

In March 2008, the City updated the 1996 Gonzales General Plan Circulation Diagram. The updated Circulation Diagram includes the proposed improvement at the US 101/Gloria Road Interchange. Gloria Road between US 101 and the future Herold Parkway Extension is designated as a major arterial street. The project would widen this segment of Gloria Road to a four-lane facility.

Two residential development projects are being planned on the northeast quadrant of the US 101/Gloria Road Interchange. The projects are shown on the City's January 2009 Economic Opportunity Map on the City's current Economic Development Commercial Industrial webpage under Planning and Economic Development (http://www.ci.gonzales.ca.us). A tentative map application for the Rincon Villages project (formerly known as Sun Valley project) has been filed with the City, accepted as complete. The EIR has been certified. The vesting tentative map is being approved. The Foletta subdivision map has been submitted, and is close to being accepted as complete by the City. The Foletta project was included as part of the combined EIR for the Sun Valley project. The Foletta project includes both the residential portion on the north side of Gloria Road and would create an approximate 20-acre commercial site on the south side of Gloria Road.

In February 2009, Salinas Valley Solid Waste Authority (SVSWA) closed its Crazy Horse Canyon Landfill facility in Salinas to the public since the facility has reached its permitted air space capacity. The SVSWA, whose members include the cities of Gonzales, Greenfield, King City, Salinas, Soledad and the eastern half of unincorporated Monterey County, will use the Johnson Canyon Road Landfill facility in Gonzales for disposal of all waste. This facility is located on Fifth Street/Johnson Canyon Road east of US 101 north of the US 101/Gloria Road Interchange. The City of Gonzales is in discussions with SVSWA regarding changes in truck routing from and to the landfill site. Due to proximity of the US 101/Gloria Road Interchange to the landfill site, more truck traffic through the interchange may be expected.

Project Sponsor(s)

The project sponsor is the City of Gonzales. This PSR is prepared in cooperation with Caltrans. The project's purpose and need statement has been developed by the Project Development Team which consisted of Caltrans, the City of Gonzales and the consultant.

3. PURPOSE AND NEED STATEMENT

Need:

The City of Gonzales is anticipating that the traffic demand on Gloria Road will increase in the future as the areas east of US 101 continue to develop. Due to its antiquated configuration, any further development will impact traffic operations on US 101 and Gloria Road.

The City recently completed the Gonzales Agricultural Business Park project and is in discussions with SVSWA regarding changes in truck routing from and to the Johnson Canyon Landfill site in Gonzales due to the closure of the Crazy Horse

Canyon Landfill site in Salinas. Both of these imminent projects will add more truck traffic to the interchange.

Given this, the City is anticipating that the existing interchange configuration will not be able to support the additional truck traffic and projected traffic demands in the next 20 years.

Purpose:
The purpose of the project is to:

- Relieve the anticipated future traffic congestion at the interchange to accommodate traffic demand associated with planned build-out of the 1996 Gonzales General Plan areas.
- Improve future local traffic circulation and connection between the west and east of US 101 in the southeastern part of the City;
- Improve freeway operations and access to and from the existing and planned land uses that are located near the interchange.

4. DEFICIENCIES

Problems
The traffic demand on Gloria Road and the interchange will increase as the proposed developments associated with the 1996 Gonzales General Plan are constructed. Gloria Road will represent the southerly access to this future growth. This existing modified trumpet interchange (Type L-12) is expected to not be able to provide the capacity to serve the future traffic demand. In addition, the opening of the 60-acre Gonzales Agricultural Business Park and changing traffic patterns for the SVSWA's Johnson Canyon Landfill due to closure of the Crazy Horse Canyon Landfill site in Salinas are expected to increase truck traffic volumes along Gloria Road and the interchange.

The following secondary deficiencies exist at the interchange:

- The existing overcrossing has a vertical clearance of only 15 feet 3 inches. Caltrans requires a vertical clearance of 16 feet 6 inches over a freeway. The overcrossing will need to be replaced to correct this nonstandard vertical clearance.
- The southbound off-ramp is nonstandard in superelevation rate and deceleration length with a design speed of 30 mph. The railroad track, west of S. Alta Street, constrains the lengthening of the ramp to meet current standard deceleration length, superelevation, and design speed requirements.

- Nonstandard intersection spacing exists between the northbound ramp termini and Tavernetti Road. The intersection geometrics at the ramp termini intersection with tight radius on the eastbound approach presents operational problems especially for large trucks. In addition to the geometric deficiency, the northbound on-ramp area is in the 100-year flood plain and is frequently flooded during winter times.
- The northbound on-ramp has a nonstandard ramp length and is also an atypical design for a freeway ramp as it intersects existing Gloria Road. The local road intersects at the middle of the ramp.

Current and Forecasted Traffic

Travel demand forecasts for the 2035 No Build and Build design year were based on the updated 2004 Association of Monterey Bay Area Governments (AMBAG) regional travel demand model. The 2004 model was updated for this project to include the changing land use patterns and travel behavior in the City of Gonzales and implementation of the proposed US101/Gloria Road interchange improvements. Descriptions of the land use map and trip generation used are included in the Traffic Impact Analysis prepared for the project.

Table 1 presents the existing and projected 2035 No Build peak hourly volumes (PHV) on local roadways and freeway ramps within the project limits. This table indicates that there will be substantial increases in interchange ramp and local roadway traffic.

TABLE 1

Existing and Forecasted 2035 No Build Peak Hourly Volume (PHV)				
Location	**Existing (Year 2006)**		**No Build (Year 2035)**	
	AM PHV	**PM PHV**	**AM PHV**	**PM PHV**
NB Gloria Road off-ramp	**131**	**150**	**1041**	**678**
NB Gloria Road on-ramp	**17**	**51**	**330**	**613**
NB Tavernetti Road south of Gloria Road	16	20	24	19
SB Tavernetti Road south of Gloria Road	21	8	36	15
EB Gloria Road between Tavernetti Road and NB off-ramp	50	53	1042	1056
WB Gloria Road between Tavernetti Road and NB off-ramp	8	26	523	860
EB Gloria Road between NB off-ramp and S. Alta Street	39	44	318	680
WB Gloria Road between NB off-ramp and S. Alta Street	128	167	840	1162
NB Alta Street north of Gloria Road	132	160	795	602
SB Alta Street north of Gloria Road	121	170	346	686
SB Gloria Road off-ramp	**40**	**28**	**391**	**383**
SB Gloria Road on-ramp	**119**	**167**	**466**	**959**

Source: Traffic Impact Analysis for PSR, dated April 8, 2009

Tables 2 and 3 present existing Levels of Service (LOS) for intersections and freeway segments within the project area. The City of Gonzales and Monterey County both established LOS C as the standard LOS for overall traffic operations for signalized and unsignalized intersections. Caltrans LOS standard is LOS C, where the operations must be at or better than LOS C in all cases. The future intersection of Gloria Road and Herold Parkway Extension would fall under City jurisdiction.

The 2035 No Build LOS for the US 101 mainline for the segments north and south of Gloria Road are projected to be D and F respectively. This future condition on US 101 would be unacceptable according to Caltrans standard. Currently, there is no planned local or regional project to widen this segment of US 101 from 4 lanes to 6 lanes. To regulate the flow of traffic entering this segment of US 101, ramp metering would be installed as part of this project.

TABLE 2

Existing and Forecasted 2035 No Build Intersection Levels of Service (LOS)

Location	***Existing (Year 2006)***		***No Build (Year 2035)***	
	AM PHV	***PM PHV***	***AM PHV***	***PM PHV***
Gloria Road / NB US 101 off-ramp	***A***	***A***	***F***	***F***
Gloria Road / NB US 101 on-ramp	***A***	***A***	***F***	***F***
Tavernetti Road / Gloria Road	*A*	*A*	*N/A*	*N/A*
S. Alta Street / Gloria Road	*A*	*A*	*F*	*F*
S. Alta Street / SB US 101 off-ramp	***A***	***A***	***C***	***C***
Herold Parkway Extension / Tavernetti Road / Gloria Road	-	-	*N/A*	*N/A*

Notes:
1. LOS Standard for City of Gonzales and Monterey County is LOS C
2. PHV = Peak Hourly Volume

Source: Traffic Impact Analysis for PSR, dated April 8, 2009

Four of the five study intersections under Year 2035 No-build Conditions would operate at both deficient overall and side-street levels of service under both the AM and PM peak hours.

Operations of the interchange in the Year 2035 would be highly inefficient. The antiquated configuration of the existing interchange would require traffic traveling over US 101 to take a rather circuitous path. The vehicle queue spillover and interaction are anticipated between the Gloria Road/ US 101 northbound off-ramp and Gloria Road/Tavernetti Road-Gloria Road intersections.

TABLE 3

Existing and Forecasted 2035 No Build Freeway Levels of Service (LOS)				
US 101 Mainline	**Existing (Year 2006)**		**No Build (Year 2035)**	
	Volume (ADT)	**LOS**	**Volume (ADT)**	**LOS**
north of Alta Street Interchange	43,000	C	81,843	F
between Alta Street and 5th Street	40,500	C	81,843	F
between 5th Street and Gloria Road	**42,300**	**C**	**67,061**	**D**
south of Gloria Road	**43,650**	**C**	**79,575**	**F**
Notes: 1. LOS Standard for Caltrans is LOS C 2. ADT = Average Daily Traffic				

Source: Traffic Impact Analysis for PSR, dated October 30, 2009

Collision History

Traffic collision data were obtained from Caltrans for the three-year period from August 1, 2005 to July 31, 2008. TASAS Report Table B - Selective Accident Rate Calculation was generated by the Department and was used for the analysis. Table 4 provides a summary of the collision analysis for the segments north and south of the US 101/Gloria Road interchange.

TABLE 4

Location (PM)	**Total Collisions**	**Fatality Collision**	**Injury Collision**	**Actual Rates (Per Million Vehicle Miles)**			**Average Rates (Per Million Vehicle Miles)**		
				F	**F+I**	**Total**	**F**	**F+I**	**Total**
US101 between 68.4 to 70.4	42	0	12	.000	.14	0.49	.011	.18	0.49
Note: **Bold underlined numbers** reflect higher-than-average collision rates. Source: Caltrans Table B - Selective Accident Rate Calculation (8/1/05 - 7/31/08)									

US 101:

The three-year period data recorded 42 collisions on US 101 between post mile 68.4 and post mile 70.4. None of the collisions involved fatalities but there were 12 injuries. The actual rate for the full segment of the highway was 0.49 per MVM (million vehicle miles), which equals the statewide average collision rate.

Location (PM)	**Total Collisions**	**Fatality Collision**	**Injury Collision**	**Actual Rates (Per Million Vehicle)**			**Average Rates (Per Million Vehicle)**		
				F	**F+I**	**Total**	**F**	**F+I**	**Total**
SB on-ramp from Gloria Road	1	0	0	.000	.00	**0.49**	.002	.17	0.40

NB off-ramp to Gloria Road	1	0	0	.000	.00	0.50	.004	.43	1.05
SB off-ramp to Gloria Road	1	0	0	.000	.00	1.04	.011	.50	1.50
NB on-ramp from Gloria Road	0	0	0	.000	.00	0.00	.002	.17	0.40
Note: **Bold underlined numbers** reflect higher-than-average collision rates. Source: Caltrans Table B - Selective Accident Rate Calculation (8/1/05 - 7/31/08)									

US 101 Ramps:
One of the four interchange ramps (southbound on-ramp from Gloria Road) has a collision rate of 0.49 MV (million vehicles), which is higher than the statewide average collision rate of 0.40 MV. There were no fatalities or injuries recorded on any of the ramps during the three-year period.

Gloria Road:
Only one collision was recorded on Gloria Road for the segment between S. Alta Street and Tavernetti Road.

5. CORRIDOR AND SYSTEM COORDINATION

Federal

The federal functional classification of US 101 is Principal Arterial. This classification recognizes trip lengths and travel densities that are indicative of substantial statewide and interstate travel as US 101 passes through rural areas and delivers trips to and from urban areas. US 101 is also part of the National Highway System (NHS) identified in the federal Transportation Equity Act for the 21st Century (TEA-21).

The Federal Department of Defense in cooperation with the Department of Transportation has also identified US 101 as a Strategic Highway Corridor Network (STRAHNET) Route. STRAHNET is a network of linked highways deemed essential to national defense for facilitating the movement of troops and equipment to airports, ports, rail lines and military bases.

In addition, US 101 is on the Interregional Road System (IRRS) and is designated as a Focus Route in the Caltrans Interregional Transportation Strategic Plan (ITSP).

US 101 is a designated route on the National Truck Network under the federal Surface Transportation Assistance Act (STAA). This network is designated for use by larger trucks. US 101 is also a State Highway Extra Legal Load (SHELL) Route.

State
This segment of US 101 is not designated as a Scenic Highway under the State Scenic Highway Program.

Ultimately, the US 101 Corridor should be developed to full freeway standards for its entire length through District 5 as a six-lane facility per the current Transportation Corridor Concept Report.

This project would accommodate the ultimate freeway concept of 6 lanes with a mandatory standard cross section.

CTC action may not be necessary to modify the existing connection and construct the improvements under build scenarios. A Superseded Freeway Agreement will also be required.

Region
TAMC's Regional Transportation Plan (RTP) for Monterey County is the countywide transportation plan for Monterey County for the next 25 years. It was adopted by the TAMC Board of Directors in May 2005 and updated in June 2010. This project is listed in the updated 2010 RTP significant priority Constrained Project List with a reference number of GON013 and $37.7 million constrained funding and $4.7 million unconstrained funding.

Local
The March 2008 Approved Circulation Diagram update to the 1996 Gonzales General Plan includes the proposed interchange improvement at junction of US 101 and Gloria Road and designates the portion of Gloria Road between US 101 and just east of the future Herold Parkway Extension as a major arterial street.

In addition, the March 2008 Approved Circulation Diagram update to the 1996 Gonzales General Plan designates a portion of Gloria Road, north of the future Herold Parkway Extension as a Class 1 Pedestrian/Bicycle Path corridor. TAMC's Monterey County 2008 Bike Map also identifies future bike lanes on Gloria Road between the northbound US 101/Gloria Road on-ramp and Camphora Gloria Road.

Per Title 8 of the City of Gonzales City Code, which passed in August 2008, the following streets within the city are authorized truck routes for the use of vehicles exceeding a maximum gross weight of three tons:

- All of Alta Street
- All of Alta Mall
- All of Fifth Street and

- Portion of Gonzales River Road within the city limits.

6. ALTERNATIVES

Three alternatives are under consideration in this PSR:

A. "No Build" Alternative

B. Build Alternative.

C. Minimum Build Alternative

A. No Build Alternative

The "No Build" alternative assumes no improvements to the existing interchange configuration. This alternative provides a basis of comparison with the Build Alternative in the future analysis year.

B. Build Alternative

The build alternative proposes reconstructing the interchange completely. Gloria Road would be extended following its original alignment east of US 101 across the freeway to S. Alta Street. A new 5-lane (4 through and 1 left turn lanes) overcrossing would be constructed over the freeway. The new interchange configuration would be a combination of tight diamond on the northbound quadrants and button-hook on the southbound side. This project would accommodate the ultimate freeway concept of 6 lanes with a mandatory standard cross section.

All interchange ramps would be single lane and the on-ramps would have ramp metering. The northbound off-ramp would be widened at the terminus to provide one left turn lane, one shared through and right turn lane and one right turn lane. The southbound off-ramp would also be widened to one left turn lane and one right turn lane at the termini. Southbound entrance ramp would be dual lanes at the intersection tapering down to one lane before entering the freeway. Both ramp termini intersections are anticipated to be signalized. No HOV bypass lanes will be provided because this stretch of US 101 has no plans for HOV lanes.

The northbound on- and off-ramps would be raised to conform to the new Gloria Road intersection. Where portions of the proposed improvements need to be elevated, 4:1 slopes would be constructed on either side of the roadway.

Two new detention basins are proposed at the northeast and southeast quadrants of the interchange. The existing ditch along the existing northbound on-ramp would be relocated to the toes of slope of the new ramps. The ditch would route to the detention basins before draining to a new culvert across US101 at about 1000 feet north of the existing crossing. The existing culvert would be abandoned. The ditch along the southbound US101 in the proximity of the

proposed overcrossing would be realigned northerly. The proposed southbound interchange on- and off-ramps would be raised above the 100-year flood plain as the area is located within the FEMA Zone A flood zone. Bypass culverts would be provided at fill locations allowing the 100-year flow. A minimum of 2-foot freeboard would be maintained above the 100-year flood level for roadways.

The new Gloria Road would be a 4-lane facility with 12-foot-wide lanes, curbs, gutters, 2 to 14-foot-wide raised median, 8-foot-wide shoulders and 6-foot-wide sidewalks on both sides. The median east of the interchange would be landscaped while hardscape median would be installed between the northbound ramp intersection and S. Alta Road. The easterly limit of work would be just east of the future Herold Parkway Extension. Improvements beyond this point would be completed by others as part of the future Gloria Road Improvement Project. The profile of the facility would be raised to accommodate the standard vertical clearance requirements, as well as, the falsework vertical clearances during construction. Retaining walls would be required on the north side of Gloria Road west of US101 to minimize the impact to the Gonzales Cemetery. The height of the retaining wall would range from 4 to 6 feet. Due to the constraint of the railroad tracks, S. Alta Street would be elevated to match the new profile grade at Gloria Road. The intersection of Gloria Road and S. Alta Street would be signalized. Retaining wall would be required along the railroad right-of-way. The height of the retaining wall would range from 4 to 10 feet. It is expected that these walls would be Caltrans Type 1 walls.

Tavernetti Road would be realigned approximately 1900 feet easterly to intersect with the future Herold Parkway Extension. The realigned Tavernetti Road would be a 2-lane facility with 12-foot-wide lanes, curbs, gutters, 4-foot-wide shoulders and 6-foot-wide sidewalks on both sides. A portion of the realigned Tavernetti Road would connect to an access road for adjacent farmlands.

S. Alta Street would be improved from the existing southbound Gloria Road off-ramp to north of the new southbound Gloria Road ramps for approximately 2,600 feet. The improvement would include 12-foot-wide lanes, curbs, gutters, 2 to 14-foot-wide raised median and 5-foot-wide shoulders on both sides. The median would be installed with hardscape. The east side of the road would include a 6-foot-wide sidewalk.

Currently, none of the local roads are classified as bike routes or have dedicated bicycle lanes. If Gloria Road and S. Alta Street are considered bike routes in the future, the proposed 8-foot-wide shoulder on Gloria Road and the proposed 5-foot-wide shoulder on S. Alta Street could be converted to dedicated bicycle lanes.

The Geometric Plan is included as **Attachment C** and the Advance Planning Study is included as **Attachment G**. The estimated project capital cost for the build alternative is $34,000,000 (March 2011); the detailed Preliminary Cost Estimate is included as **Attachment D**.

C. Minimum Build Alternative

Due to anticipated funding constraints, the City is contemplating to construct interchange improvements in 2 phases. The following minimum improvements are being considered. See **Attachment C**.

- Construction of a new 4-lane (3 through and 1 left turn lanes) overcrossing and west portion of Gloria Road connecting S. Alta Street to the areas west of US 101. 2 to 14-foot-wide raised median would be provided between the new overcrossing and S. Alta Street while painted median is proposed on the bridge.
- Construction of 4-lane Gloria Road from the interchange easterly to Herold Parkway Extension. Landscaped median between 4 to 14 feet wide would separate the eastbound and westbound traffic within the limits.
- Construction of the new northbound on- and off-ramps connecting to Gloria Road as a conventional diamond interchange.
- Realignment of Tavernetti Road to intersect with Herold Parkway Extension.
- Signalization of northbound ramp termini, Gloria Road/S. Alta Street, and Gloria Road/Herold Parkway Extension intersections.

The southbound on- and off-ramps would remain as it is today; S. Alta Street would be widened to provide an additional receiving lane for the dual left turn lanes from westbound Gloria Road and a 4 to 14-foot-wide raised median.

The estimated project capital cost for the minimum build alternative is $25,000,000 (March 2011).

STAA truck in Figures 404.5B of Caltrans Highway Design Manual (HDM) was used as the design vehicle under both build alternatives and the design will accommodate STAA movements.

NONSTANDARD DESIGN FEATURES FOR THE BUILD ALTERNATIVES

All improvements proposed for the build alternatives will satisfy Caltrans mandatory and advisory design standards and comply with the latest ADA requirements contained in the Design Information Bulletin (DIB) 82-03. Curb ramps with truncated domes, bicycle detection loops, and pedestrian push button would be provided. Continuity of ADA-compliant pedestrian path would also be maintained.

ANALYSIS OF PROPOSAL

Results of the operation analysis are summarized in Table 5. Level of Service (LOS) C or better is projected for intersections and freeway segments within the project area.

TABLE 5

Forecasted 2035 Build Alternatives Intersection Levels of Service (LOS)				
Location	**Minimum Build (Year 2035)**		**Ultimate Build (Year 2035)**	
	AM PHV	**PM PHV**	**AM PHV**	**PM PHV**
NB US 101 NB Ramps/Gloria Road	C	C	C	B
SB US 101 SB Ramps/ S. Alta Street	C	C	C	B
S. Alta Street / Gloria Road	B	C	A	A
Herold Parkway / Gloria Road	C	C	B	C

Notes:
1. LOS Standard for City of Gonzales and Monterey County is LOS C
2. The intersection of Gloria Road/Herold Parkway falls under County/City jurisdiction
3. PHV = Peak Hourly Volume

Source: Traffic Impact Analysis for PSR, dated March 10,2010

RIGHT OF WAY

The project would require 2 full and 8 partial right-of-way takes, totaling approximately 19 acres. The right of way requirements for Build Alternative is summarized in Table 6.

TABLE 6

No.	Owner(s) Assessor's Parcel No.	Type	Acquisition
1	City of Gonzales 020-201-022	Public	Partial
2	Pacific Wine Partners LLC 020-201-021	Commercial/Industrial	Partial
3	Gonzales Cemetery District 257-011-001	Private (Cemetery)	Full
4	Rianda Family Limited Partnership 223-032-019	Future Residential Development (Folleta Subdivision), currently agricultural	Partial
5	D' Arrigo Bros Co of California 223-032-020	Future Residential Development (Sun Valley Subdivision), currently agricultural	Partial
6	Rianda Family Limited Partnership 257-021-021	Future Commercial Development currently agricultural	Partial

No.	Owner(s) Assessor's Parcel No.	Type	Acquisition
7	Teresa J Lopez 257-021-020	Residential	Full
8	Victor L Lanini 257-021-037	Future Commercial Development currently agricultural	Partial
9	Monterey County	Public (Tarvernetti Road)	Partial
10	Pacific Wine Partners LLC 020-201-019	Commercial/Industrial	Partial

As indicated in the table above, three commercial/industrial parcels, two future residential and one commercial developments but currently agricultural parcels, one single-family residential, one City of Gonzales parcel, one County of Monterey parcel, and one Gonzales Cemetery District parcel would be impacted by the project.

The required parcel from Gonzales Cemetery District (Right of Way No. 3) is located south of Gloria Court. Currently, it is a vacant, unused portion of the cemetery and relocation of remains will not be required. A portion of an adjacent property (Right of Way No. 2) is anticipated to be acquired in exchange for the impacted Gonzales Cemetery District parcel. This additional property would extend the footprint of the Gonzales Cemetery to the north.

The future residential developments will accommodate the proposed interchange improvements; therefore, no impact to residential homes is anticipated.

It is anticipated the excess land along east side of the realigned northbound off-ramp would be relinquished to the City for the construction of a detention basin.

Under the minimum build scenario, the parcels from the City of Gonzales (Right of Way No. 1) and Pacific Wine Partner (Right of Way No. 10) in the northwest quadrant would not be needed.

Railroad Involvement
Union Pacific Railroad (UPRR) tracks are located west of US 101, adjacent to S. Alta Street; however, there is no anticipated impact to this railroad facility or the railroad right of way. A temporary construction easement may be required to construct retaining wall adjacent to the railroad right-of-way.

Utility and Other Owner Involvement
Overhead electric and telephone lines and underground fiber optic lines exist along Gloria Road and S. Alta Street. These utilities will be relocated.

The right of way data sheet is included as **Attachment E** and the right-of-way requirement map is included as **Attachment F**.

Highway Planting and Landscaping

US 101 within the project limits is not classified "Landscaped Freeways" according to the State of California's Classified "Landscaped Freeways" listing, dated January 6, 2009.

There is no defined existing landscaping within the US 101 median or the existing Gloria Road Interchange. There are native vegetation such as grass within the median, and grass, heavy brush and intermittent trees along the freeway. The existing trees impacted by the project will be identified and a list will be included as part of the Natural Environment Study to be completed during the PA&ED phase.

Highway planting will be provided since adjacent properties will be developed at the time of highway construction contract is accepted and for revegetation, erosion control and storm water pollution prevention. It is expected that the areas between the freeway and ramps will be landscaped. The highway planting within the proposed interchange will be implemented within two years after the highway construction is completed, under a separate contract, funded through the parent highway construction contract and will have a three-year plant establishment period. A total of $625,000 is included in the project cost estimate for highway planting.

Median landscaping is proposed along portions of Gloria Road in the ultimate condition when funding is available. There is also opportunity for future landscaping along S. Alta Street as well. Conceptual plan will be developed during the PA&ED phase.

Water Quality and Storm Water Runoff

The project will be consistent with the City of Gonzales's goal of reducing the quantity of storm water runoff and improve quality of runoff. A Storm Water Data Report that identifies Best Management Practices (BMPs) and summarizes the actions taken in compliance with the National Pollutant Discharge Elimination System (NPDES) permit has been prepared for this project. The signed cover page is attached as **Attachment I**. The estimated cost of the BMPs is noted in the attached Preliminary Cost Estimate (**Attachment D**).

This project is located on the state highway system and covered by a NPDES statewide permit issued to Caltrans by the State Water Resources Control Board. This permit covers all Caltrans properties, facilities and activities for both the

construction and operational phases of projects and requires that both structural and non-structural BMPs be incorporated into projects to minimize the potential for both short-and long-term degradation of water quality. Storm water runoff from the improvements is expected to contain pollutants that will contribute to a degradation of water quality in receiving body if not treated.

Storm water runoff from the northbound ramps and Gloria Road would be drained to bio-filtration swales proposed along the ramp toes of slope. These bio-filtration swales would overflow to the proposed detention basins. The detention basins would outlet to Gonzales Slough through a new culvert across US101. In the southbound quadrants storm water runoff from the ramps, Gloria Road and S. Alta Street would be drained to the bio-filtration swales along the ramp toes of slope. The overflow from the biofiltration swales would discharge into the existing settling basin where it will ultimately outlet to Gonzales Slough. Runoff would be routed to biofiltration swales through concentrated flow conveyance systems (dikes, downdrains, overside drains, curbs and gutters, etc.) as a part of a treatment train. The City of Gonzales would be responsible for maintaining the proposed retention basins and the existing settling basin.

The ditch and water settling basin in the project area are unlikely to be considered jurisdictional waters of the United States because they were created in uplands. However, construction-related activities may affect the drainage. Water quality measures will be discussed in the Water Quality Report in the PA&ED phase.

Design Pollution Prevention BMPs to be implemented will include the use of berms, dikes, ditches, curbs and gutters, and swales to ensure that runoff is properly conveyed and erosion is minimized. The project is expected to increase volume and velocity of water quality flow. However, the effect to downstream flow should be negligible. Majority of the water will be conveyed by bio-filtration swales through the project with a maximum velocity of 2.5 ft/sec during a 25-year storm event. Storm pipes will be fitted with flared end sections (FES) and energy dissipation in the form of rock slope protection (RSP) to prevent scouring. Proposed drainage system will be detailed in the PS&E phase.

The project would create several new fill slope surfaces and disturb several existing surfaces. New slope surfaces are proposed at the southbound button-hook on- and off-ramps, the northbound diagonal on- and off-ramps, and the fill on both sides of the new US101/Gloria Road overcrossing. The new slopes will be 4:1 within the State right-of-way. Disturbed slopes will be re-vegetated. Erosion Control plans will be developed in the PS&E phase. All new fill and cut slopes will be vegetated in accordance with Caltrans erosion control (Hydroseed) specifications. The goal during construction will be to implement permanent erosion control measures as soon as possible. Depending on the time of year,

these measures can be implemented anytime during construction. New vegetated surfaces will feature native plants and existing vegetation will be preserved wherever feasible.

Two types of permanent treatment BMPs are proposed in the project. Bio-filtration swales are proposed along the toes of slope, between culvert outfalls, and before draining into field inlets. The existing V-shaped unlined ditch in the northbound quadrants would be relocated to a new alignment along the easterly edge of the new ramps. Additionally, two detention basins would be constructed along the east side of the northbound diagonal off-ramp and on-ramp, just outside of the proposed State right-of-way. The existing settling basin in the northwest quadrant of the interchange is proposed to remain and it would be used as detention basin for storm water runoff from the southbound quadrants. The swales and basins are expected to improve water quality of the runoff before being discharged to Gonzales Slough. The project intends to treat 100% of the water quality volume/water quality flow, WQV/WQF. It is estimated that approximately 20% of the WQV/WQF would be infiltrated while the rest would be routed to the detention basins before discharging to Gonzales Slough.

During construction, the project will adhere to the requirements set forth in the Caltrans National Pollutant Discharge Elimination System (NPDES) permit, the Caltrans Storm Water Management Plan (SWMP), the Caltrans Project Planning and Design Guide, the Construction Site Best Management Practices (BMPs) Manual and the Caltrans Standard Specifications. The contractor has the responsibility to take whatever measures are necessary to eliminate potential impacts (as stated in Caltrans Standard Specifications 7-1.01G).

Because the proposed project would disturb more than one acre of land, the following measures are recommended:

1. A Notification of Construction (NOC) would be submitted to the appropriate Regional Water Quality Control Board (RWQCB) at least 30 days prior to the start of construction. The tentative start date, tentative duration, location of construction, description of project, estimated number of affected acres, resident engineer in charge of the project, and telephone number of the resident engineer would be reported.
2. A Storm Water Pollution Prevention Plan (SWPPP) will be prepared and implemented during construction to the satisfaction of the resident engineer.
3. A Notice of Construction Completion would be submitted to the RWQCB upon completion of construction and stabilization of the site. A project would be considered complete when the criteria for final stabilization in the Construction General Permit are met.

Temporary construction site BMPs will be implemented, which may include, but not limited to, temporary erosion control, temporary drainage inlet protection, temporary silt fence, temporary fiber rolls, temporary cover, temporary concrete washout facility, and temporary construction entrance.

Existing vegetated surface will be preserved as much as possible. The area of preserved vegetation will be identified and delineated on the construction plan. Areas that will be off-limit to the contractor will be delineated with environmentally sensitive area (ESA) fence.

Erosion Control

The topography of the project area is flat; therefore, long-term erosion is not anticipated to be a concern with regard to the proposed project. All graded and disturbed areas will receive erosion control treatment to minimize surface erosion in compliance with Caltrans policy.

Noise Barrier

A noise analysis will be performed to determine if sound walls are required because of potential project effects on existing and future residential developments east of US 101. Soundwall, if required, will be constructed by the residential development project.

Transportation Management Plan

A Transportation Management Plan (TMP) will be prepared to address traffic impacts from stage construction, detours and specific traffic handling concerns during construction of this project. Construction can be scheduled such that traffic can be maintained through the construction area without significant delays.

The City of Gonzales, as the sponsor for this project, will produce and disseminate press releases and other documents necessary to adequately inform the public concerning the project and its associated traffic impacts. This responsibility includes advance notification to local newspapers, television and radio stations, and emergency response providers. The City will also submit to Caltrans District 5 Public Information Office, weekly information regarding the daily traffic impacts to State facilities. This information will be included in the Caltrans Weekly Traffic Updates, which is dispersed to all news media outlets and other interested agencies.

The TMP will most likely include changeable message signs plus public information campaign with local mailing, and a telephone hot line. The City of Gonzales will address TMP concerns at public meetings prior to construction. Construction Zone Enhanced Enforcement Program (COZEEP) will be required for mainline lane closures. The freeway lane closures will be during off peak

hours, to allow for placement of temporary railing for construction of new overcrossing as well as demolition of the existing overcrossing.

Risk Management Plan

A Risk Management Plan has been prepared for this project to assist the project team in identifying, analyzing, and managing negative impacts on the schedule, cost, scope and quality of this project. The Risk Management Plan Risk Register is attached (**Attachment J**). The currently identified risks items that affect the project schedule and project cost are as follows:

- High risk - The project is currently not fully funded.
- Medium risk – Landowners may not be willing to sell lands.
- Medium risk - The ditches along west side of the northbound on-ramp and between the southbound US101 lanes and cemetery just downstream of the culvert may be considered wetland by the Department of Fish & Games and US Army Corps of Engineers and federal listed endangered species may exist in the ditches. Additional mitigation resources may be required and it may impact the project cost and as well as the project schedule.
- Medium risk - The MB Fowler property is identified as potential UST site. Contamination may exist in this parcel. If the soil is determined to be hazardous, clean-up expenses will be added to the project costs.
- Medium risk - The proposed alignment runs right through the "vacant" Gonzales cemetery parcel located to the south of the developed cemetery. The preliminary research indicates that this cemetery parcel does not have any burials. However, it’s possible that there was a "Potter's Field" (where the county’s poor or unidentified bodies were buried at county expense) somewhere nearby. More robust investigation will be conducted during the PA&ED phase to ensure no burial is present in the parcel. If burial is found, additional resources and time would be added to the project.

A minimum build alternative has been developed and the anticipated funding will be sufficient to construct the minimum build alternative. Early consultation with the resource agencies and testing of site for potential contamination will be necessary to manage project risk of schedule delay and under budget.

REJECTED ALTERNATIVE

An alternative where the southbound ramps connect to Gloria Road was not considered because it would require significant right of way acquisition from Gonzales Cemetery, the two businesses located just south of the interchange and relocation of remains at the Gonzales Cemetery. In addition, the distance between the new ramp terminus intersection and Gloria Road/S. Alta Street intersection would be less than minimum required distance of 400 feet. The close proximity

between the ramp terminus and a local road intersection typically contribute to traffic operational deficiency due to short weave, short storage lengths and limitations in providing proper signal phasing, signing and delineation.

7. COMMUNITY INVOLVEMENT

The project's purpose and need statement has been developed by the Project Development Team which consists of Caltrans, the City of Gonzales and the consultant. The project was presented in the City Council meeting on March 27, 2007. As the project progresses, there will be opportunities for community involvement.

It is anticipated that an informal meeting will be scheduled to get input from the public early in the environmental phase and one public hearing will be held after circulation of the draft environmental document.

8. ENVIRONMENTAL DETERMINATION/DOCUMENT

Anticipated Environmental Approval

A Preliminary Environmental Analysis Report (PEAR) was prepared and is included in **Attachment H**. The PEAR identifies that the proposed project is anticipated to require an Initial Study/Mitigated Negative Declaration (IS/MND) to comply with the California Environmental Quality Act (CEQA) and an Environmental Assessment/Finding of No Significant Impact to comply with the National Environmental Policy Act (NEPA). Caltrans will be the lead agency under both CEQA and NEPA.

The key environmental issues for the build alternative include potential project effects on biological resources, cultural resources, air quality, and noise and vibration. The required studies include Relocation Impact Study, Archaeological Survey Report, Historic Resources Evaluation Report, Historic Property Survey Report, and Finding of Effect, Initial Site Assessment Report, Air Quality Report, Noise and Vibration Report, Natural Environment Study Report, Wetland & Other Waters Delineation Report, Visual Impact Study Report, Farmland Study, and Biological Assessment Report. No special environmental considerations or processes have been identified at this time which may affect the project delivery or require unusual, exceptional or extended environmental processes. The project will comply with applicable Monterey County and City of Gonzales general plan policies and Monterey Bay Unified Air Pollution Control District (MBUAPCD) recommended mitigation measures for construction activities where feasible.

Completion of the environmental review process is expected to take up 26 months. Critical path items include preparation of an archaeological survey report, natural environmental study and agency consultation for sensitive species and wetland determination.

Preliminary mitigation commitment costs, estimated for biological and wetland mitigation and permitting at approximately $300,000, are included in the project cost estimate for Build Alternative.

9. FUNDING

A. CAPITAL COST

Preliminary Cost Estimate Summary

The attached Preliminary Cost Estimates (**Attachment D**) provide specific work items that are included in the Build and Minimum Build Alternatives. Following is a cost breakdown of the main items in current value dollars*:

Build Alternative

Items	**Costs (Rounded)**
Roadway Items	$25,500,000
Structure Items	$4,700,000
Right-of-Way and Utility Relocation*	$ 3,800,000
Total	**$34,000,000**

Minimum Build Alternative

Items	**Costs (Rounded)**
Construction	$18,300,000
Structures items	$3,700,000
Right-of-Way and Utility Relocation*	$ 3,000,000
Total	**$25,000,000**

* Right-of-way and utility relocation costs are escalated to 2015 dollars @3%/year.

Anticipated funding for constructing the project will predominantly consist of the City local development impact fee (DIF) and Transportation Agency of Monterey County (TAMC) Regional Development Impact fees (RDIF). Other potential funding sources include State Transportation Improvement Program (STIP) and Federal Highway Administration. If funding proves to be insufficient, the City may consider phasing the project by constructing the minimum build alternative.

Funding Source	Estimated Amounts (Rounded)
City Development Impact Fee (Existing General Plan Area)	$6,300,000
TAMC Regional Development Impact Fee	$17,600,000
City Development Impact Fee (New General Plan Area)	$11,300,000
Others	$7,600,000
Total	$42,800,000

Phase	Funding Source	Amount	When anticipated
PA&ED	City DIF	$ 0.9M	2013
PS&E & R/W	City DIF/TAMC RDIF	$ 4.2M	2014
R/W Capital	City DIF/TAMC RDIF	$ 3.7M	2015
Construction Capital	City DIF/TAMC RDIF	$30.2M	2015
Construction Support	City DIF/TAMC RDIF	$ 3.8M	2015
	Total	42.8M	

The City of Gonzales will prepare all project development, environmental clearance and PS&E documents and will bear the entire cost. Caltrans will provide project oversight. Cooperative Agreements for the design and construction phases will be prepared to outline roles, obligations and responsibilities of both Caltrans and the City of Gonzales.

Cooperative Features

A draft Cooperative Agreement between the State and the City of Gonzales has been prepared and a copy is included in **Attachment K**. The agreement identifies the City's responsibility of preparing the preliminary engineering, preparation of final design plans and acquisition of right-of-way through the use of their consultant. The State will serve as the independent quality assurance of all the work performed.

Subsequent agreements will be prepared for the construction phase of the project and future maintenance of the facility. It is expected that the State will maintain the traffic signal at the ramp intersections as well as at the intersection of the Gloria Road and S. Alta Road.

B. CAPITAL SUPPORT ESTIMATE

The City will fund one hundred percent (100%) of all support costs required to complete PA&ED, PS&E and Construction. The schedule and cost for completion of PA&ED, PS&E and construction phases are based on the assumption that the City of Gonzales and its consultants will prepare all documents and studies for review and approval. Caltrans will provide independent quality assurance for work completed by the City and their consultants. Should it become necessary for Caltrans to do any or all of the work related to this project, Caltrans would need to complete a work plan detailing the schedule of milestones and costs for support.

Current value capital outlay support cost estimates for Caltrans resources to provide independent quality assurance are as follows:

	CALTRANS PROJECT SUPPORT COSTS								
	PA&ED 0 Phase		Design 1 Phase		Right of Way 2 Phase		Construction 4 Phase		Total
	Dist	DES	Dist	DES	Dist	DES	Dist	DES	
Build Alternative	85k	15k	320k	60k	36k		320k	60k	896k
Minimum Build Alternative	85k	15k	225k	45k	30k		225k	45k	670k

10. SCHEDULE

Milestones	Date
Begin Environmental	January 9, 2013
Notice of Preparation (NOP)	January 15, 2013
Circulate DED	June 2, 2014
PA & ED Approval	March 4, 2015
Complete PS&E	October 16, 2015
Begin Construction	February 16, 2016
End Construction	October 24, 2017

Potential Delay to Schedule

- There is still a potential of funding shortfall for the Minimum Build Alternative. The schedule may be delayed if funding cannot be secured.

11. FHWA COORDINATION

No FHWA coordination took place during the PSR phase. It is expected that this would be a "Delegated Project" under the September 4, 2007 Stewardship and Oversight Agreement between FHWA and Caltrans.

12. LOCAL ENTITY CONTACTS/DISTRICT CONTACTS

Question regarding this Project Study Report may be directed to:

David Rasmussen (805) 549-3677
Project Manager
Caltrans District 5

Carlos Lopez (831) 675-4205
Director of Public Works
City of Gonzales

Daniel Ho (408) 453-5373
Project Manager
Mark Thomas & Company

13. PROJECT REVIEWS

District Maintenance	Joel Wright	Date	5/26/2010
District Safety Review	Tamara Barbock	Date	2/11/2011
DES Review	Brent Massey	Date	5/25/2010
HQ Design Coordinator	Mike Janzen	Date	5/19/2010

A constructability review was conducted on the project by design consultant consisted of multi-disciplinary team to identify potential fatal flaw on March 4, 2011.

14. ATTACHMENTS

A. PROJECT LOCATION MAP
B. PROJECT VICINITY MAP
C. GEOMETRIC PLANS
D. PRELIMINARY COST ESTIMATES
E. RIGHT-OF-WAY DATA SHEET
F. RIGHT-OF-WAY REQUIREMENT MAP
G. ADVANCE PLANNING STUDY
H. PRELIMINARY ENVIRONMENTAL ANALYSIS REPORT
I. STORM WATER DATA REPORT (COVER PAGE ONLY)
J. RISK MANAGEMENT PLAN RISK REGISTER
K. DRAFT COOPERATIVE AGREEMENT
L. LIFE CYCLE COST ANALYSIS FORM
M. CALTRANS DISTRIBUTION LIST
N. TRAFFIC MANAGEMENT PLAN DATA SHEET/CHECKLIST

ATTACHMENT A

Project Location Map

Project Location
Detail
California
Project Vicinity
FOR MORE DETAIL SEE REVERSE SIDE
SAN FRANCISCO
STOCKTON
MODESTO
Oakland
San Jose
Salinas
Monterey
Gonzales
Soledad
Greenfield
King City
Hollister
Gilroy
Watsonville
Santa Cruz
Merced
Los Banos
Dos Palos
Firebaugh
Mendota
Coalinga
Huron
San Ardo
San Lucas
Monterey Bay
Pacific Ocean
SOLANO
CONTRA COSTA
ALAMEDA
SAN JOAQUIN
STANISLAUS
SANTA CLARA
SANTA CRUZ
MERCED
MADERA
FRESNO
SAN BENITO
MONTEREY
SANTA LUCIA RANGE
Pinnacles Nat'l. Mon.
Fort Hunter Ligget
Los Padres
Monument
Farallon National Wildlife Refuge
FARALLON ISLANDS
California Sea Otter Refuge
Big Sur
Carmel Highlands
Pacific Grove
Pebble Beach
Carmel-By-The-Sea
Castroville
Marina
Seaside
Sprec-kels
Chualar
Carmel Valley
Moss Landing
Watson-ville
San Juan Bautista
Aptos
Capitola
Soquel
Santa Cruz
Davenport
Felton
Boulder Creek
Ben Lomond
Scotts Valley
Los Gatos
Saratoga
Sunny-vale
Mtn. View
Palo Alto
Milpitas
Santa Clara
San Jose
Coyote
New Almaden
Morgan Hill
San Martin
Gilroy
Hollister
Tres Pinos
Bells Station
Gustine
Newman
Stevinson
Atwater
Livingston
Delhi
Hilmar
Crows Lndg.
Keyes
Turlock
Ceres
Waterford
Riverbank
Oakdale
Escalon
Ripon
Manteca
Tracy
Lathrop
Vernalis
Salida
Westley
Patterson
Newman
Los Banos
Dos Palos
Firebaugh
Mendota
Kerman
Tranquillity
San Joaquin
Helm
Five Points
Burrell
Coalinga
Huron
Avenal
Kettleman
Lemoore
Riverdale
Mercey Hot Springs
Panoche
Priest Valley
Bradley
Lockwood
Jolon
Gorda
Lucia
Big Sur
Carmel Highlands
Pacifica
Half Moon Bay
Princeton
San Gregorio
La Honda
Big Basin
Belmont
San Carlos
San Mateo
Redwood City
Menlo Park
Palo Alto
Mountain View
Sunnyvale
Santa Clara
San Jose
Milpitas
Fremont
Newark
Hayward
San Leandro
Alameda
Oakland
Berkeley
Richmond
Hercules
Pinole
Martinez
Concord
Walnut Creek
Clayton
Pittsburg
Antioch
Oakley
Brentwood
Discovery Bay
Byron
Knightsen
Rio Vista
Isleton
Walnut Grove
Thornton
Galt
Lodi
Stockton
Tracy
Livermore
Pleasanton
Sunol
Danville
Vallejo
Benicia
Rodeo
Ignacio
Novato
San Rafael
Sausalito
Bolinas
Petaluma
Cotati
Sonoma
Santa Rosa
Rohnert Park
Cloverdale
Healdsburg
Windsor
Sebastopol
Forestville
Guerneville
Occidental
Bodega
Bodega Bay
Valley Ford
Dillon Beach
Tomales
Point Reyes Station
Inverness
Olema
Fairfax
San Anselmo
Ross
Kentfield
Mill Valley
Sausalito
Tiburon
Belvedere
Corte Madera
Larkspur
Novato
Petaluma
Rohnert Park
Cotati
Sonoma
Napa
Yountville
St. Helena
Calistoga
Angwin
Lakeport
Kelseyville
Upper Lake
Clearlake
Lucerne
Middletown
Cobb
Kenwood
Glen Ellen
Boyes Hot Springs
Fairfield
Vacaville
Dixon
Davis
Elmira
Clarksburg
Hood
Courtland
Locke
Walnut Grove
Isleton
Rio Vista
Suisun City
Birds Landing
Elk Grove
Florin
Sacramento
Cordova
Folsom
Rancho Cordova
Orangevale
Fair Oaks
Carmichael
Citrus Heights
Roseville
Rocklin
Lincoln
Auburn
Colfax
Grass Valley
Nevada City
Truckee
Tahoe City
Kings Beach
Incline Village
Zephyr Cove
Stateline
Meyers
Tuolumne
Sonora
Jamestown
Chinese Camp
Tuttletown
Knights Ferry
Oakdale
Riverbank
Modesto
Waterford
Ceres
Hickman
La Grange
Turlock
Snelling
Merced Falls
Winton
Atwater
Merced
Tuttle
Planada
Le Grand
El Nido
Red Top
Chowchilla
Fairmead
Berenda
Dairyland
Ripperdan
Kettleman
Avenal
Lemoore
Riverdale
Lemoore Naval Air Sta.
Coalinga
Huron
Lake San Antonio Rec. Area
Salinas
Bradley
Lockwood
Jolon
Gorda
Cape San Martin

ATTACHMENT B

Project Vicinity Map

Vicinity Map

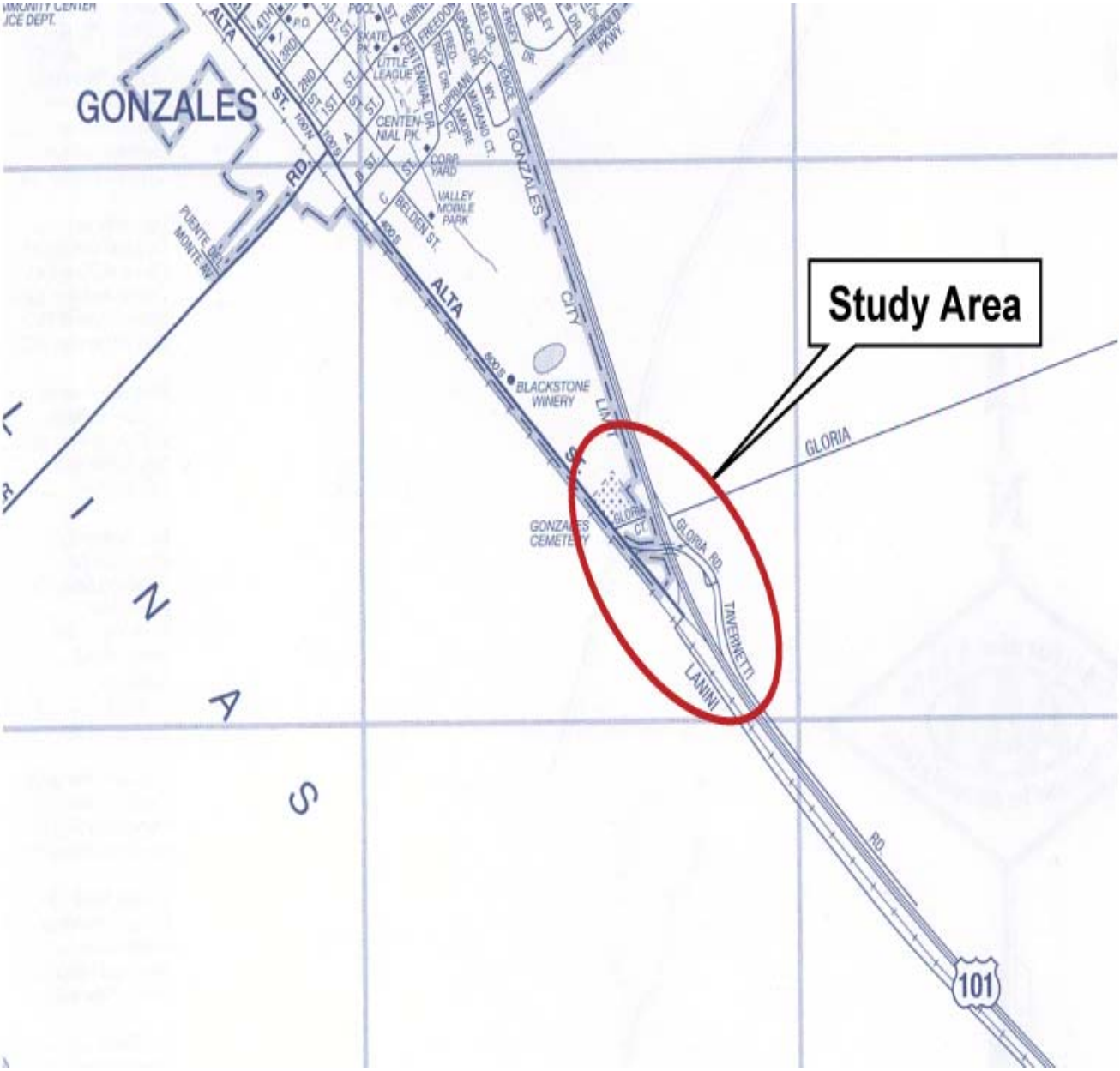

ATTACHMENT C

Geometric Plans

Dist	COUNTY	ROUTE	POST MILES TOTAL PROJECT	SHEET No.	TOTAL SHEETS
05	MON	101	68.4/70.4		

REGISTERED CIVIL ENGINEER DATE

PLANS APPROVAL DATE

REGISTERED PROFESSIONAL ENGINEER RICHARD K TANAKA No. 23233 Exp. 12/31/11 CIVIL STATE OF CALIFORNIA

THE STATE OF CALIFORNIA OR ITS OFFICERS OR AGENTS SHALL NOT BE RESPONSIBLE FOR THE ACCURACY OR COMPLETENESS OF SCANNED COPIES OF THIS PLAN SHEET.

MARK THOMAS & COMPANY, INC.
1960 ZANKER ROAD
SAN JOSE, CA 95112

CITY OF GONZALES
DEPARTMENT OF PUBLIC WORKS
P.O. BOX 647, 147 FOURTH STREET
GONZALES, CA 93926

LEGEND & ABBREVIATIONS:

X	PAVEMENT STRUCTURAL SECTION
RHMA	RUBBERIZED HOT MIX ASPHALT
HMA	HOT MIX ASPHALT
C&G	CURB & GUTTER
Lip	LIP OF GUTTER
TCE	TEMPORARY CONSTRUCTION EASEMENT
PUE	PUBLIC UTILITY EASEMENT
HP	HINGE POINT

NOTES:

1. DIMENSIONS OF THE STRUCTURAL SECTIONS ARE SUBJECT TO TOLERANCES SPECIFIED IN THE STANDARD SPECIFICATIONS.
2. SUPERELEVATION AS SHOWN OR AS DIRECTED BY THE ENGINEER.
3. FOR LOCATION AND TYPE OF HMA DIKE, CONCRETE CURB, AND CONCRETE BARRIER, SEE LAYOUT PLANS.
4. FOR STRUCTURAL SECTION AND PAVEMENT DETAILS UNDER HMA DIKE, MBGR, AND CONCRETE BARRIERS, SEE SHEET X- .

DESIGN DESIGNATION (GLORIA ROAD)

ADT (2015) =	XX	D =	XX %
ADT (2035) =	XXX	T =	XX %
DHV =		V =	XX mph
ESAL =	XXXX	TI_{20} =	XX

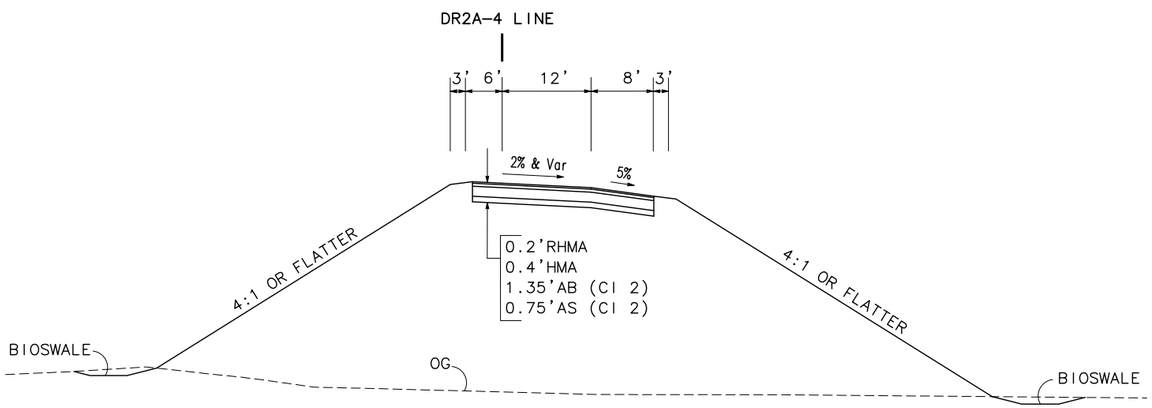

NB GLORIA ROAD ON-RAMP
STA DR2A-4 00+60 TO 10+30

ROUTE 101-NB ON-RAMP DESIGN DESIGNATION

ADT (EXIST)	510
ADT (2035)	7,210
V	25-50 mph
ESAL	5,298,425
TI(20)	11.0

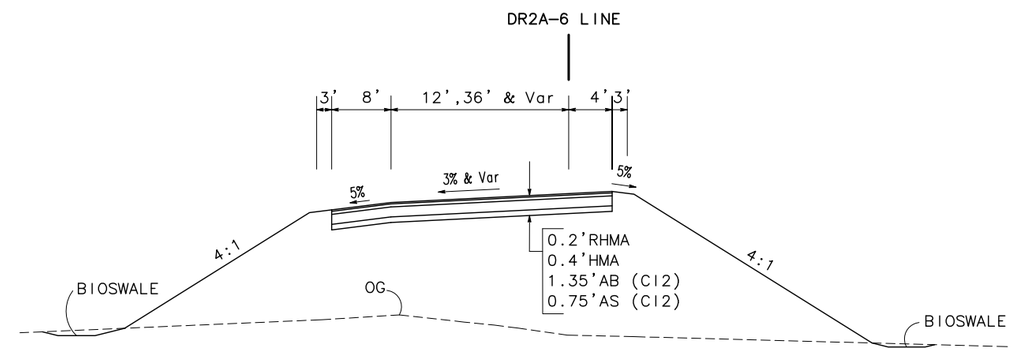

NB GLORIA ROAD OFF-RAMP
STA DR2A-6 0+40 TO 10+40

ROUTE 101-NB OFFRAMP DESIGN DESIGNATION

ADT (EXIST)	1,050
ADT (2035)	11,990
V	25-50 mph
ESAL	13,003,559
TI(20)	12.0

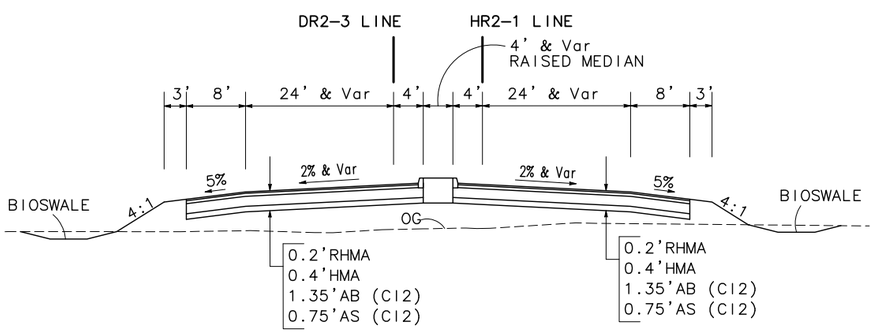

SB GLORIA ROAD OFF-RAMP
STA DR2-3 0+50 TO 4+30

SB GLORIA ROAD ON-RAMP
STA HR2-1 0+50 TO 4+20

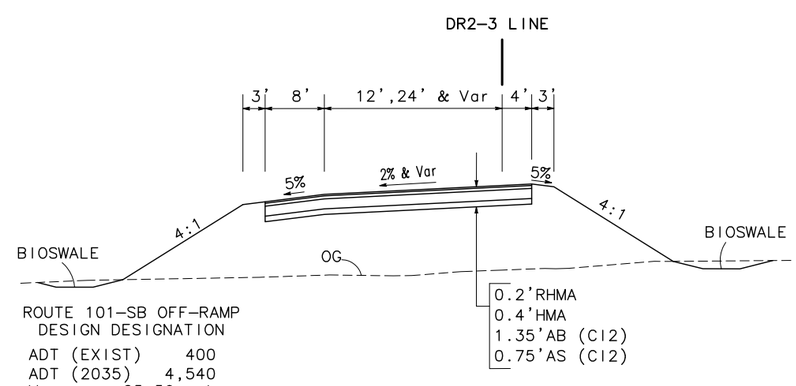

ROUTE 101-SB OFF-RAMP DESIGN DESIGNATION

ADT (EXIST)	400
ADT (2035)	4,540
V	25-50 mph
ESAL	5,772,093
TI(20)	11.5

SB GLORIA ROAD OFF-RAMP
STA DR2-3 4+30 TO 12+10

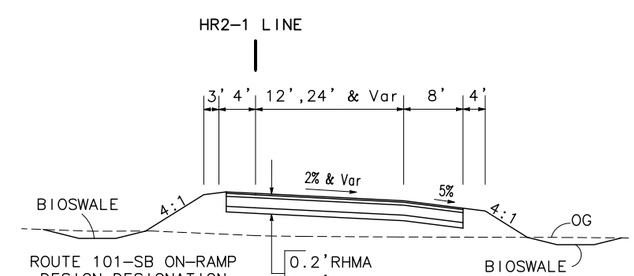

ROUTE 101-SB ON-RAMP DESIGN DESIGNATION

ADT (EXIST)	1,780
ADT (2035)	11,310
V	25-50 mph
ESAL	11,054,562
TI(20)	11.0

SB GLORIA ROAD ON-RAMP
STA HR2-1 4+20 TO 11+10

TYPICAL CROSS SECTIONS
NO SCALE

X-1

REVISED BY | DATE REVISED
DANIEL HO | RICHARD TANAKA
CALCULATED-DESIGNED BY | CHECKED BY
TBD
CONSULTANT FUNCTIONAL SUPERVISOR
STATE OF CALIFORNIA - DEPARTMENT OF TRANSPORTATION
Caltrans

LAST REVISION 00-00-00
DATE PLOTTED => 3-31-2011
TIME PLOTTED => 3:23 PM

Dist	COUNTY	ROUTE	POST MILES TOTAL PROJECT	SHEET No.	TOTAL SHEETS
05	MON	101	68.4/70.4		

REGISTERED CIVIL ENGINEER DATE

PLANS APPROVAL DATE

REGISTERED PROFESSIONAL ENGINEER RICHARD K TANAKA No. 23233 Exp. 12/31/11 CIVIL STATE OF CALIFORNIA

THE STATE OF CALIFORNIA OR ITS OFFICERS OR AGENTS SHALL NOT BE RESPONSIBLE FOR THE ACCURACY OR COMPLETENESS OF SCANNED COPIES OF THIS PLAN SHEET.

MARK THOMAS & COMPANY, INC.
1960 ZANKER ROAD
SAN JOSE, CA 95112

CITY OF GONZALES
DEPARTMENT OF PUBLIC WORKS
P.O. BOX 647, 147 FOURTH STREET
GONZALES, CA 93926

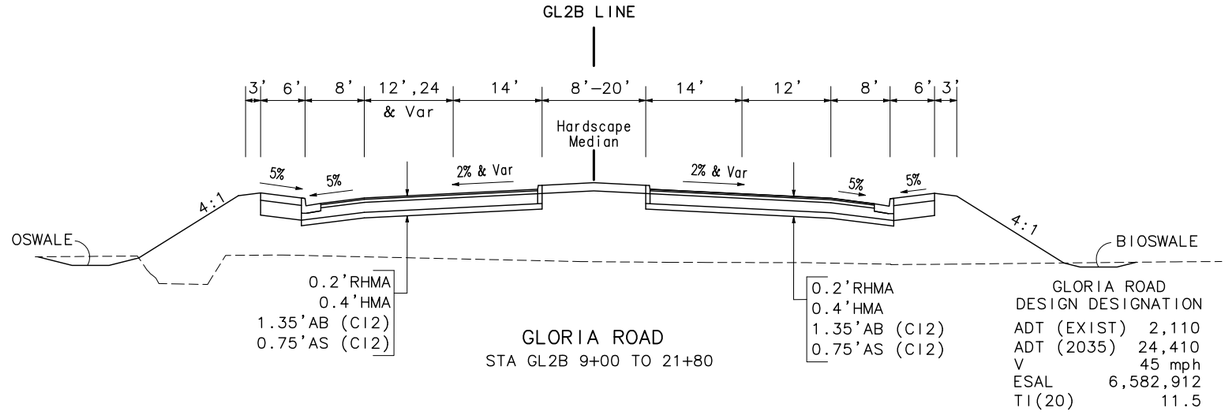

GLORIA ROAD
STA GL2B 9+00 TO 21+80

GLORIA ROAD
DESIGN DESIGNATION

ADT (EXIST)	2,110
ADT (2035)	24,410
V	45 mph
ESAL	6,582,912
TI(20)	11.5

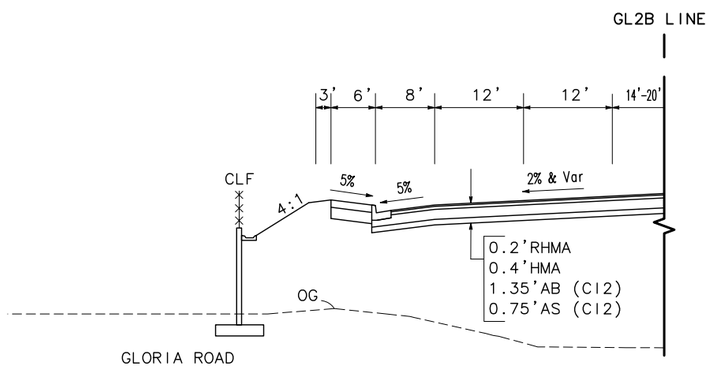

GLORIA ROAD
DESIGN DESIGNATION

ADT (EXIST)	2,110
ADT (2035)	24,410
V	45 mph
ESAL	6,582,912
TI(20)	11.5

GLORIA ROAD
STA GL2B 2+00 4+40

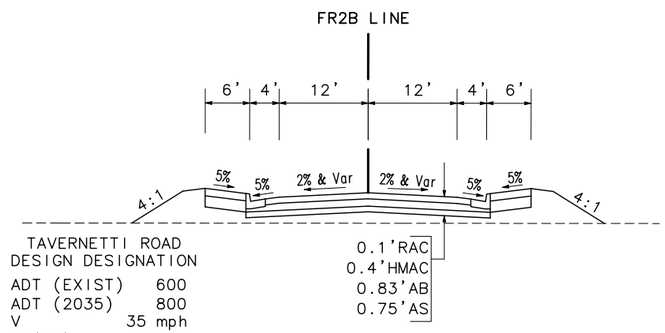

TAVERNETTI ROAD
DESIGN DESIGNATION

ADT (EXIST)	600
ADT (2035)	800
V	35 mph
TI(20)	11.0

REALIGNED TAVERNETTI ROAD
STA FR2B 10+90 TO 32+00
STA FR2B 33+00 TO 39+00
STA FR2B 41+00 TO 44+14.79

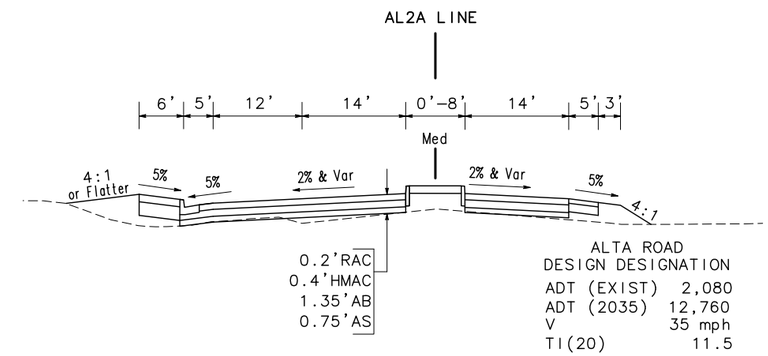

ALTA ROAD
DESIGN DESIGNATION

ADT (EXIST)	2,080
ADT (2035)	12,760
V	35 mph
TI(20)	11.5

S. ALTA STREET
STA AL2A 0+00 TO 8+00
STA AL2A 9+40 TO 17+00
STA AL2A 18+00 TO 15+70.04

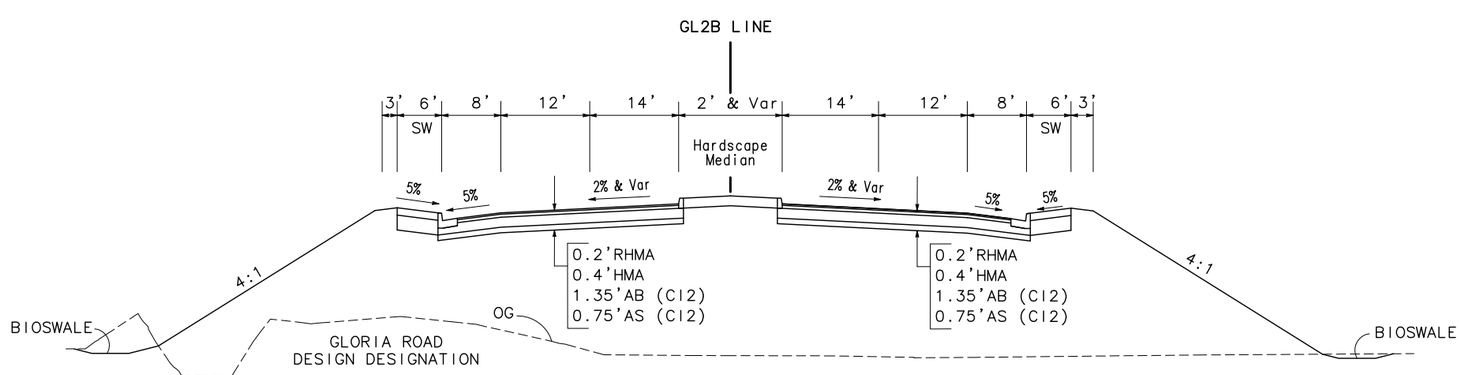

GLORIA ROAD
DESIGN DESIGNATION

ADT (EXIST)	2,110
ADT (2035)	24,410
V	45 mph
ESAL	6,582,912
TI(20)	11.5

GLORIA ROAD
STA GL2B 0+50 TO 4+40

TYPICAL CROSS SECTIONS
NO SCALE

X-2

STATE OF CALIFORNIA – DEPARTMENT OF TRANSPORTATION
Caltrans

CONSULTANT FUNCTIONAL SUPERVISOR: TBD
CALCULATED-DESIGNED BY: DANIEL HO
CHECKED BY: RICHARD TANAKA
REVISED BY
DATE REVISED

LAST REVISION 00-00-00
DATE PLOTTED => 3-31-2011
TIME PLOTTED => 3:24 PM

Dist	COUNTY	ROUTE	POST MILES TOTAL PROJECT	SHEET No.	TOTAL SHEETS
05	MON	101	68.4/70.4		

REGISTERED CIVIL ENGINEER DATE

PLANS APPROVAL DATE

REGISTERED PROFESSIONAL ENGINEER RICHARD K TANAKA No. 23233 Exp. 12/31/11 CIVIL STATE OF CALIFORNIA

THE STATE OF CALIFORNIA OR ITS OFFICERS OR AGENTS SHALL NOT BE RESPONSIBLE FOR THE ACCURACY OR COMPLETENESS OF ELECTRONIC COPIES OF THIS PLAN SHEET.

MARK THOMAS & COMPANY, INC.
1960 ZANKER ROAD
SAN JOSE, CA 95112

CITY OF GONZALES
DEPARTMENT OF PUBLIC WORKS
P.O. BOX 647, 147 FOURTH STREET
GONZALES, CA 93926

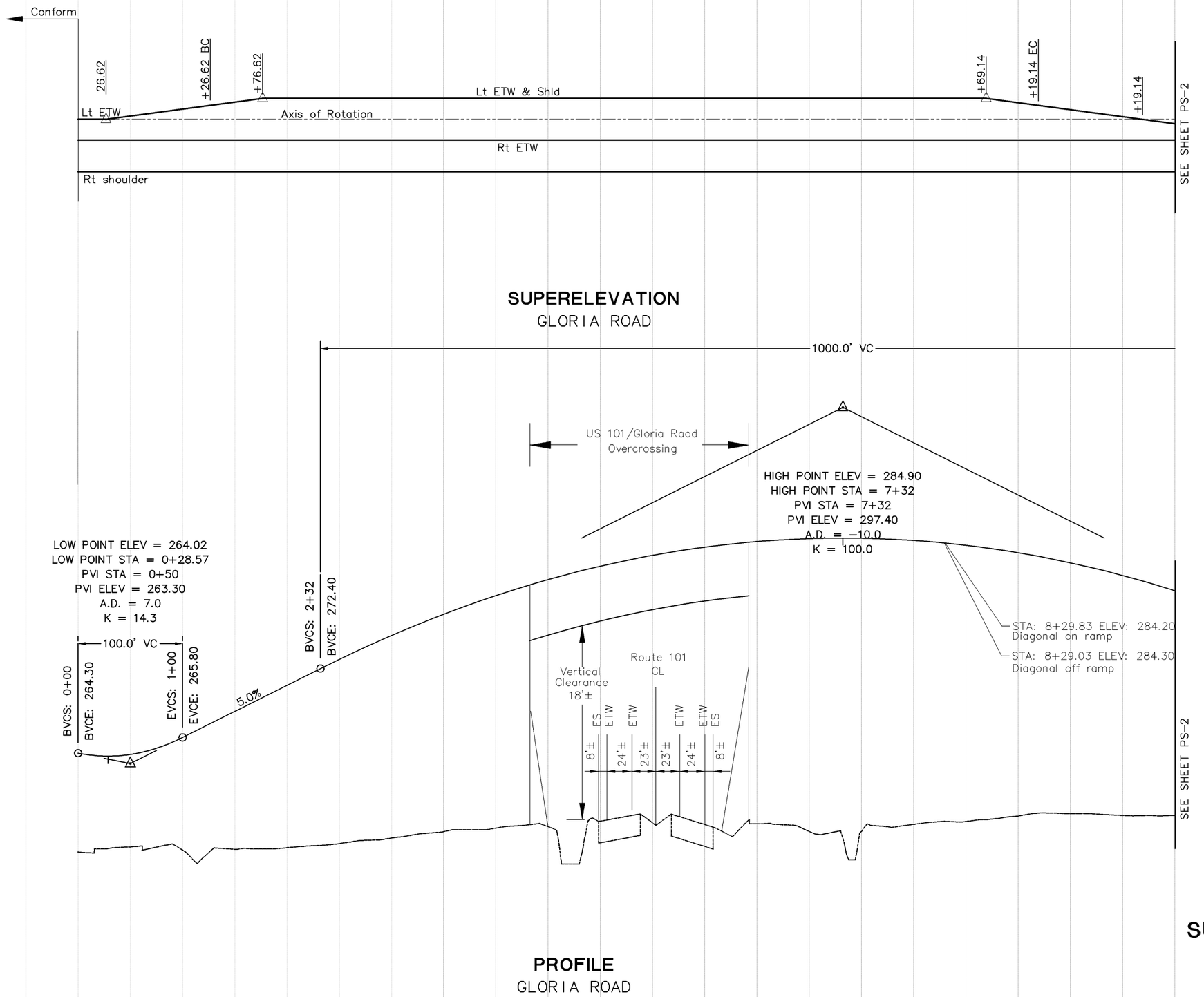

GL2A LINE
PROFILE AND SUPERELEVATION DIAGRAM

SCALE: Horiz 1"=50'
Vert 1"=5'

PS-1

STATE OF CALIFORNIA – DEPARTMENT OF TRANSPORTATION

Caltrans

CONSULTANT FUNCTIONAL SUPERVISOR

CALCULATED-DESIGNED BY

CHECKED BY

REVISED BY

DATE REVISED

LAST REVISION 00-00-00

DATE PLOTTED => 10-21-2010
TIME PLOTTED => 1:59 PM

W:\Gonzales-56-0156B-US101-Gloria Rd IC\CADD\PS&E\56-0156B-P1-2.dwg 10/21/2010 1:59 PM

Dist	COUNTY	ROUTE	POST MILES TOTAL PROJECT	SHEET No.	TOTAL SHEETS
05	MON	101	68.4/70.4		

REGISTERED CIVIL ENGINEER DATE

PLANS APPROVAL DATE

REGISTERED PROFESSIONAL ENGINEER RICHARD K TANAKA No. 23233 Exp. 12/31/11 CIVIL STATE OF CALIFORNIA

THE STATE OF CALIFORNIA OR ITS OFFICERS OR AGENTS SHALL NOT BE RESPONSIBLE FOR THE ACCURACY OR COMPLETENESS OF ELECTRONIC COPIES OF THIS PLAN SHEET.

MARK THOMAS & COMPANY, INC.
1960 ZANKER ROAD
SAN JOSE, CA 95112

CITY OF GONZALES
DEPARTMENT OF PUBLIC WORKS
P.O. BOX 647, 147 FOURTH STREET
GONZALES, CA 93926

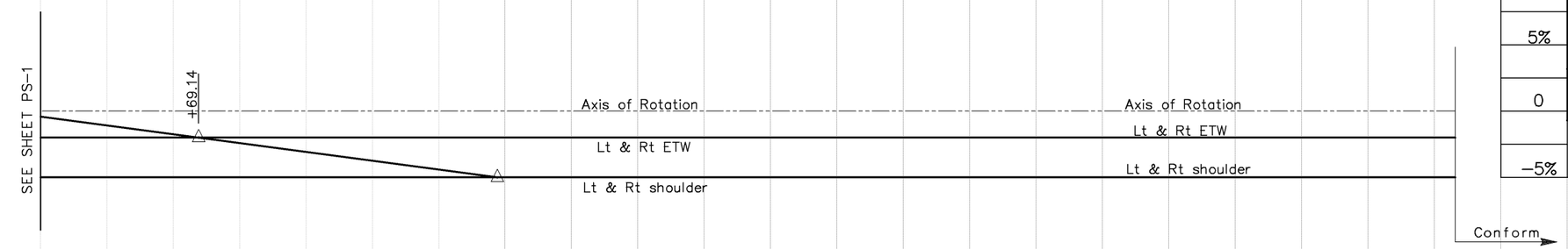

SUPERELEVATION
GLORIA ROAD

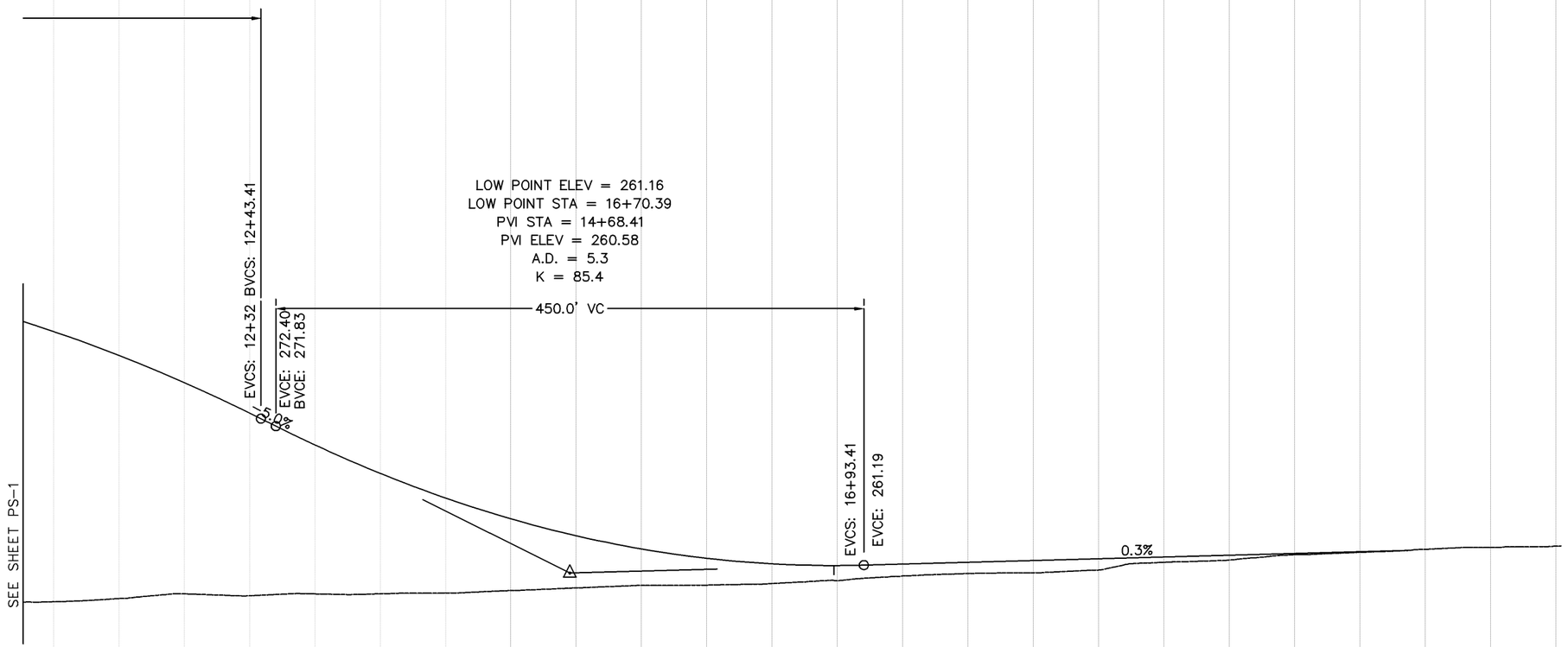

PROFILE
GLORIA ROAD

STATION	11	12	13	14	15	16	17	18	19	20+00	TOTAL
CY Exc											
CY Emb											

GL2A LINE
PROFILE AND SUPERELEVATION DIAGRAM

SCALE: Horiz 1"=50'
Vert 1"=5'

PS-2

STATE OF CALIFORNIA – DEPARTMENT OF TRANSPORTATION
Caltrans
CONSULTANT FUNCTIONAL SUPERVISOR
CALCULATED-DESIGNED BY
CHECKED BY
REVISED BY
DATE REVISED

LAST REVISION 00-00-00
DATE PLOTTED => 10-21-2010
TIME PLOTTED => 1:59 PM

W:\Gonzales-56-0156B-US101-Gloria Rd 16\CADD\PS&E\56-0156B-P1-2.dwg 10/21/2010 1:59 PM

Dist	COUNTY	ROUTE	POST MILES TOTAL PROJECT	SHEET No.	TOTAL SHEETS
05	MON	101	68.4/70.4		

REGISTERED CIVIL ENGINEER DATE

PLANS APPROVAL DATE

REGISTERED PROFESSIONAL ENGINEER
RICHARD K TANAKA
No. 23233
Exp. 12/31/11
CIVIL
STATE OF CALIFORNIA

THE STATE OF CALIFORNIA OR ITS OFFICERS OR AGENTS SHALL NOT BE RESPONSIBLE FOR THE ACCURACY OR COMPLETENESS OF ELECTRONIC COPIES OF THIS PLAN SHEET.

MARK THOMAS & COMPANY, INC.
1960 ZANKER ROAD
SAN JOSE, CA 95112

CITY OF GONZALES
DEPARTMENT OF PUBLIC WORKS
P.O. BOX 647, 147 FOURTH STREET
GONZALES, CA 93926

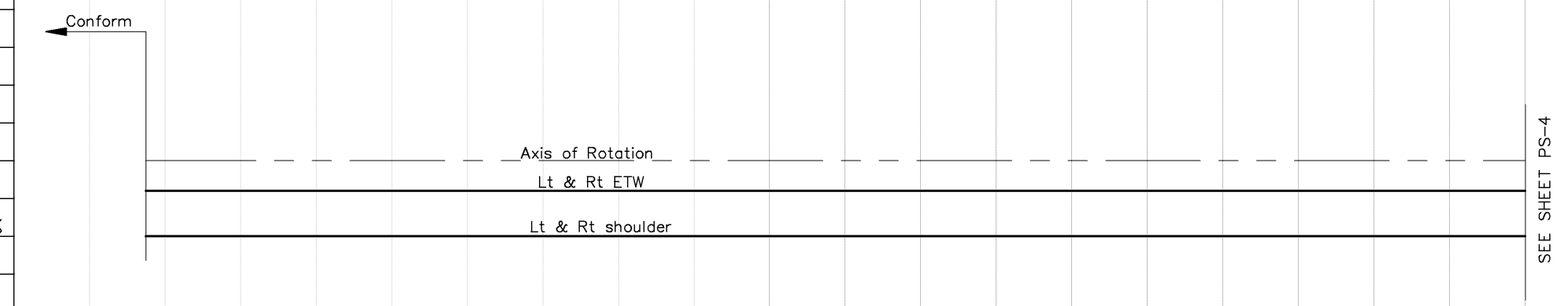

SUPERELEVATION
ALTA STREET

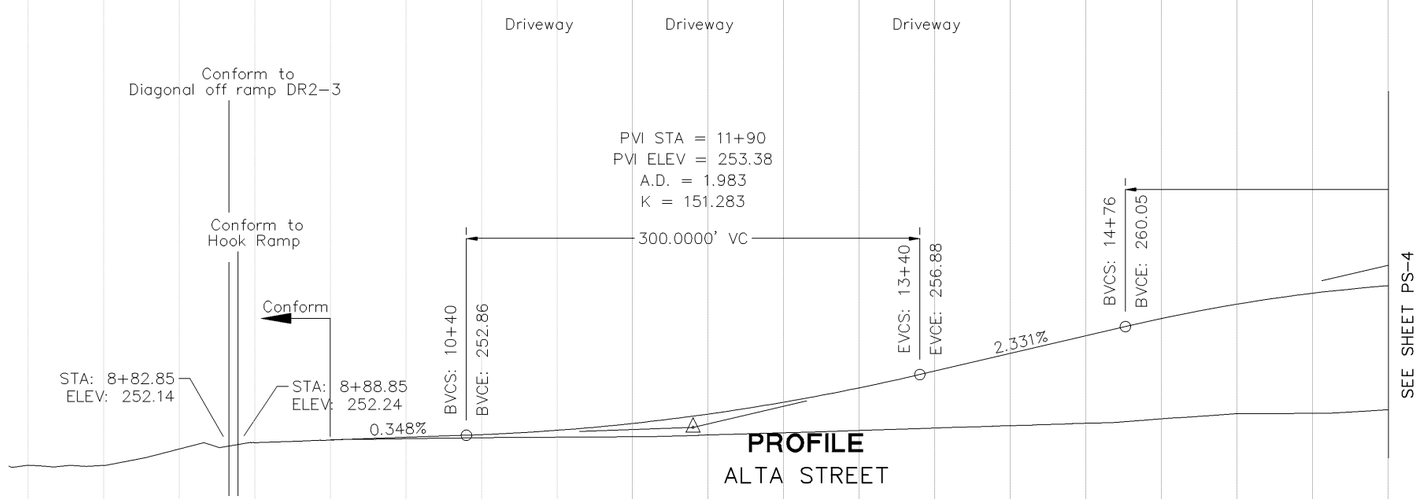

PROFILE
ALTA STREET

STATION	8	9	10+00	11	12	13	14	15	16	TOTAL
CY Exc										
CY Emb										

AL2A LINE
PROFILE AND SUPERELEVATION DIAGRAM

SCALE: Horiz 1"=50'
Vert 1"=5'

PS-3

REVISED BY	DATE REVISED

CALCULATED-DESIGNED BY
CHECKED BY
CONSULTANT FUNCTIONAL SUPERVISOR

STATE OF CALIFORNIA - DEPARTMENT OF TRANSPORTATION
Caltrans

LAST REVISION 00-00-00
DATE PLOTTED => 10-21-2010
TIME PLOTTED => 2:00 PM

W:\Gonzales-56-0156B-LS101-Gloria Rd 16\CADD\PS&E\56-0156B-P3-4.dwg 10/21/2010 2:00 PM

BORDER LAST REVISED 3/1/2007

RELATIVE BORDER SCALE IS IN INCHES 0 1 2 3

USERNAME => Bnguyen
DGN FILE => 56-0156B-P3-4.dwg

CU 00000

05-0P930K

Dist	COUNTY	ROUTE	POST MILES TOTAL PROJECT	SHEET No.	TOTAL SHEETS
05	MON	101	68.4/70.4		

REGISTERED CIVIL ENGINEER DATE

PLANS APPROVAL DATE

REGISTERED PROFESSIONAL ENGINEER
RICHARD K TANAKA
No. 23233
Exp. 12/31/11
CIVIL
STATE OF CALIFORNIA

THE STATE OF CALIFORNIA OR ITS OFFICERS OR AGENTS SHALL NOT BE RESPONSIBLE FOR THE ACCURACY OR COMPLETENESS OF ELECTRONIC COPIES OF THIS PLAN SHEET.

MARK THOMAS & COMPANY, INC.
1960 ZANKER ROAD
SAN JOSE, CA 95112

CITY OF GONZALES
DEPARTMENT OF PUBLIC WORKS
P.O. BOX 647, 147 FOURTH STREET
GONZALES, CA 93926

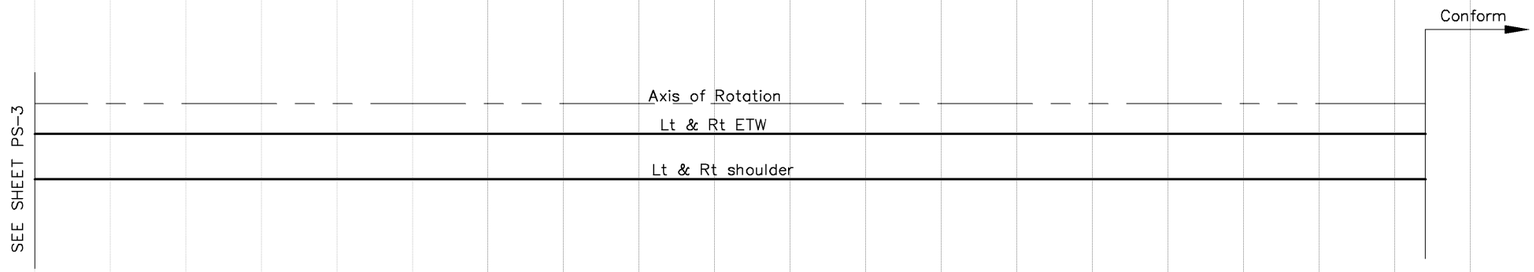

SUPERELEVATION
ALTA STREET

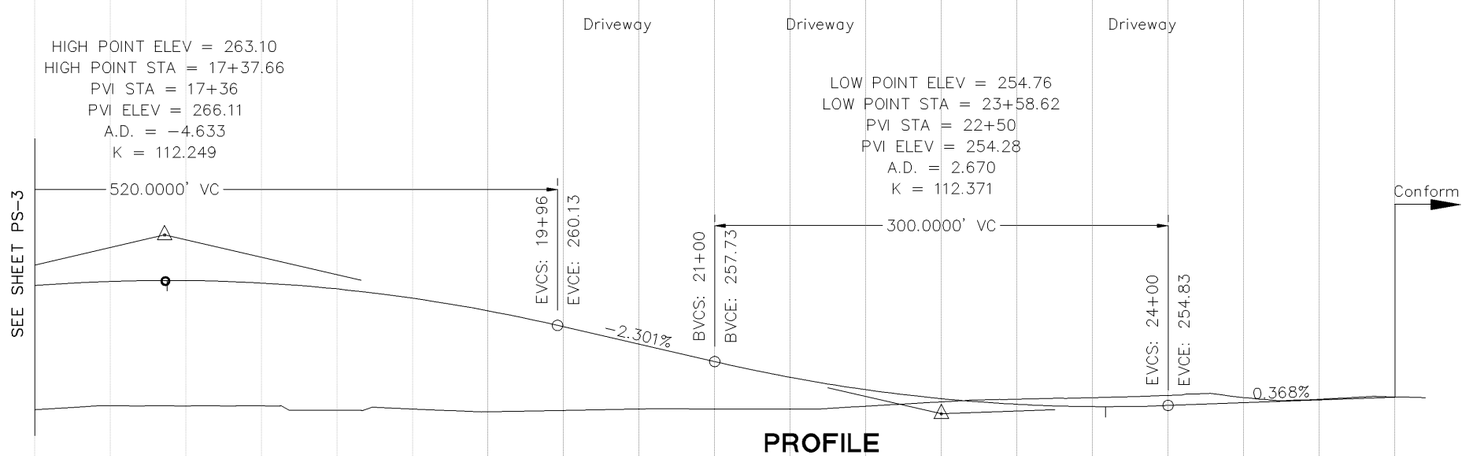

PROFILE
ALTA STREET

AL2A LINE
PROFILE AND SUPERELEVATION DIAGRAM

SCALE: Horiz 1"=50'
Vert 1"=5'

PS-4

STATION	17	18	19	20+00	21	22	23	24	25	TOTAL
CY Exc										
CY Emb										

REVISED BY	DATE REVISED

CALCULATED-DESIGNED BY
CHECKED BY
CONSULTANT FUNCTIONAL SUPERVISOR

STATE OF CALIFORNIA - DEPARTMENT OF TRANSPORTATION
Caltrans

LAST REVISION 00-00-00
DATE PLOTTED => 10-21-2010
TIME PLOTTED => 2:00 PM

W:\Gonzales-56-0156B-US101-Gloria Rd IC\CADD\PS&E\56-0156B-P3-4.dwg 10/21/2010 2:00 PM

BORDER LAST REVISED 3/1/2007

RELATIVE BORDER SCALE IS IN INCHES 0 1 2 3

USERNAME => Bnguyen
DGN FILE => 56-0156B-P3-4.dwg

CU 00000

05-0P930K

Dist	COUNTY	ROUTE	POST MILES TOTAL PROJECT	SHEET No.	TOTAL SHEETS
05	MON	101	68.4/70.4		

REGISTERED CIVIL ENGINEER DATE

PLANS APPROVAL DATE

REGISTERED PROFESSIONAL ENGINEER RICHARD K TANAKA No. 23233 Exp. 12/31/11 CIVIL STATE OF CALIFORNIA

THE STATE OF CALIFORNIA OR ITS OFFICERS OR AGENTS SHALL NOT BE RESPONSIBLE FOR THE ACCURACY OR COMPLETENESS OF ELECTRONIC COPIES OF THIS PLAN SHEET.

MARK THOMAS & COMPANY, INC.
1960 ZANKER ROAD
SAN JOSE, CA 95112

CITY OF GONZALES
DEPARTMENT OF PUBLIC WORKS
P.O. BOX 647, 147 FOURTH STREET
GONZALES, CA 93926

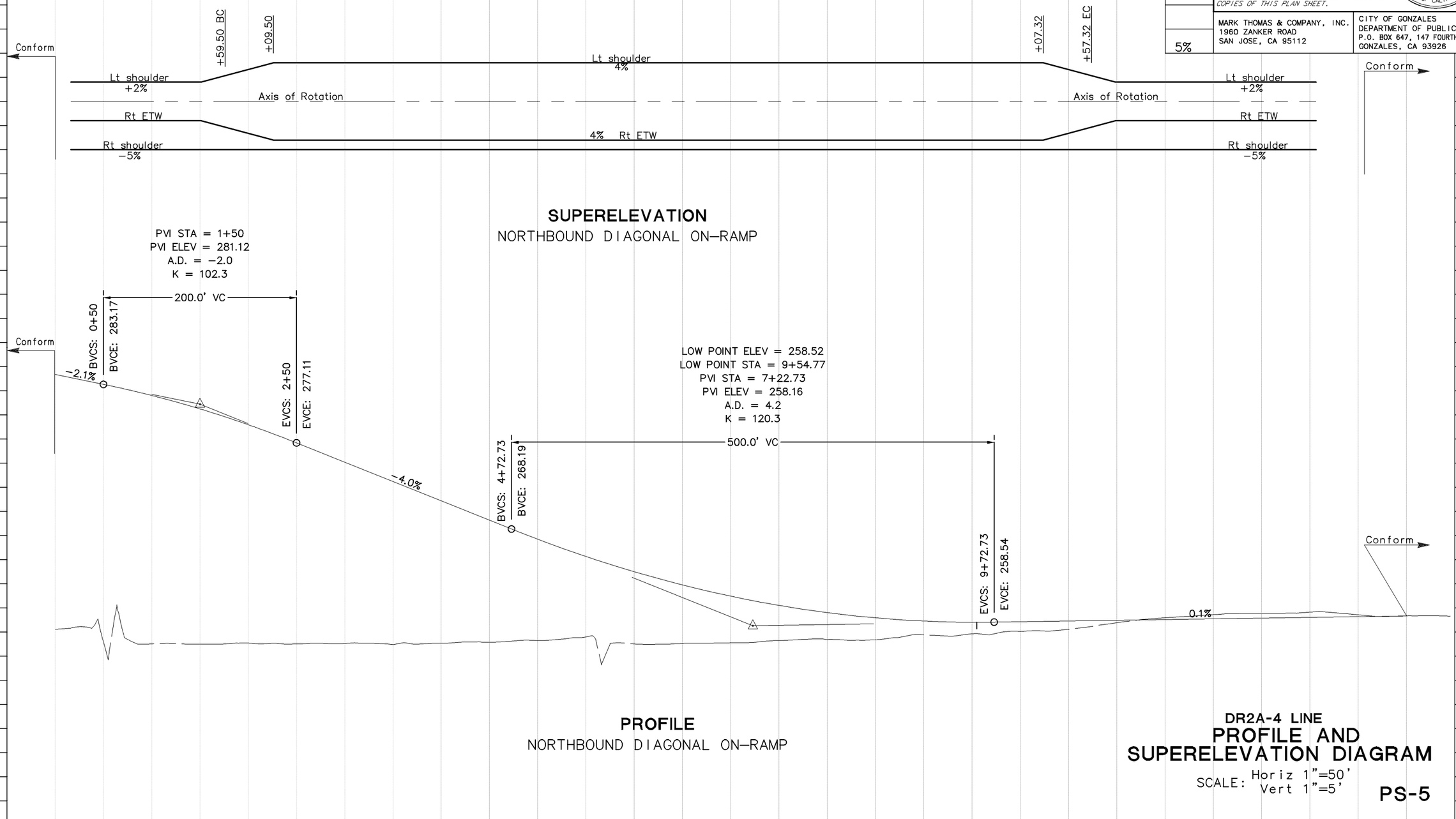

SUPERELEVATION
NORTHBOUND DIAGONAL ON–RAMP

PROFILE
NORTHBOUND DIAGONAL ON–RAMP

DR2A-4 LINE
PROFILE AND SUPERELEVATION DIAGRAM

SCALE: Horiz 1"=50'
Vert 1"=5'

PS-5

REVISED BY | DATE REVISED

CALCULATED-DESIGNED BY | CHECKED BY

CONSULTANT FUNCTIONAL SUPERVISOR

STATE OF CALIFORNIA - DEPARTMENT OF TRANSPORTATION

Caltrans

LAST REVISION 00-00-00 | DATE PLOTTED => 10-21-2010 | TIME PLOTTED => 2:01 PM

W:\Gonzales-56-0156B-USIO1-Gloria Rd IC\CADD\PS&E\56-0156B-P5.dwg 10/21/2010 2:01 PM

BORDER LAST REVISED 3/1/2007 | RELATIVE BORDER SCALE IS IN INCHES 0 1 2 3 | USERNAME => Bnguyen | DGN FILE => 56-0156B-P5.dwg | CU 00000 | 05-0P930K

Dist	COUNTY	ROUTE	POST MILES TOTAL PROJECT	SHEET No.	TOTAL SHEETS
05	MON	101	68.4/70.4		

REGISTERED CIVIL ENGINEER DATE

PLANS APPROVAL DATE

REGISTERED PROFESSIONAL ENGINEER RICHARD K TANAKA No. 23233 Exp. 12/31/11 CIVIL STATE OF CALIFORNIA

THE STATE OF CALIFORNIA OR ITS OFFICERS OR AGENTS SHALL NOT BE RESPONSIBLE FOR THE ACCURACY OR COMPLETENESS OF ELECTRONIC COPIES OF THIS PLAN SHEET.

MARK THOMAS & COMPANY, INC.
1960 ZANKER ROAD
SAN JOSE, CA 95112

CITY OF GONZALES
DEPARTMENT OF PUBLIC WORKS
P.O. BOX 647, 147 FOURTH STREET
GONZALES, CA 93926

SUPERELEVATION

NORTHBOUND DIAGONAL OFF-RAMP

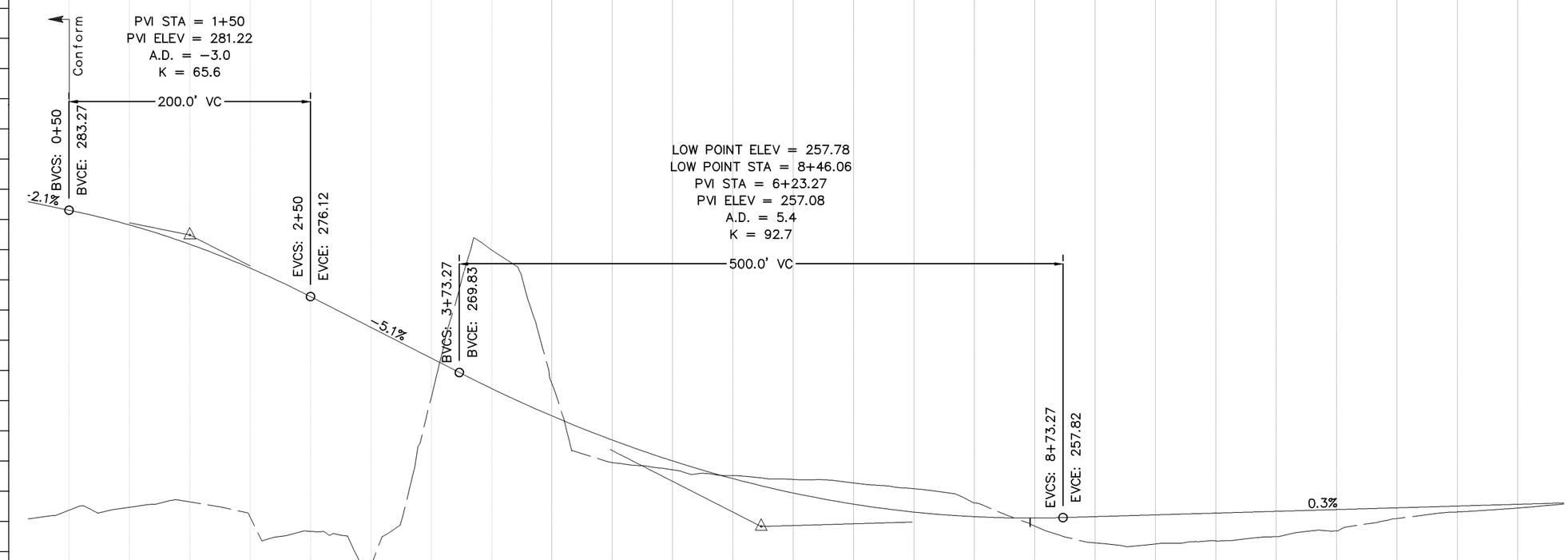

PROFILE

NORTHBOUND DIAGONAL OFF-RAMP

DR2A-6 LINE

PROFILE AND SUPERELEVATION DIAGRAM

SCALE: Horiz 1"=50'
Vert 1"=5'

PS-6

STATION	0	1	2	3	4	5	6	7	8	9	10+00	11	12	13	14	TOTAL
CY Exc																
CY Emb																

REVISED BY | DATE REVISED | CALCULATED-DESIGNED BY | CHECKED BY | CONSULTANT FUNCTIONAL SUPERVISOR

STATE OF CALIFORNIA - DEPARTMENT OF TRANSPORTATION

Caltrans

LAST REVISION 00-00-00 | DATE PLOTTED => 10-21-2010 | TIME PLOTTED => 2:11 PM

W:\Gonzales-56-0156B-US101-Gloria Rd IC\CADD\PS&E\56-0156B-P6.dwg 10/21/2010 2:11 PM

Dist	COUNTY	ROUTE	POST MILES TOTAL PROJECT	SHEET No.	TOTAL SHEETS
05	MON	101	68.4/70.4		

REGISTERED CIVIL ENGINEER DATE

PLANS APPROVAL DATE

REGISTERED PROFESSIONAL ENGINEER RICHARD K TANAKA No. 23233 Exp. 12/31/11 CIVIL STATE OF CALIFORNIA

THE STATE OF CALIFORNIA OR ITS OFFICERS OR AGENTS SHALL NOT BE RESPONSIBLE FOR THE ACCURACY OR COMPLETENESS OF ELECTRONIC COPIES OF THIS PLAN SHEET.

MARK THOMAS & COMPANY, INC.
1960 ZANKER ROAD
SAN JOSE, CA 95112

CITY OF GONZALES
DEPARTMENT OF PUBLIC WORKS
P.O. BOX 647, 147 FOURTH STREET
GONZALES, CA 93926

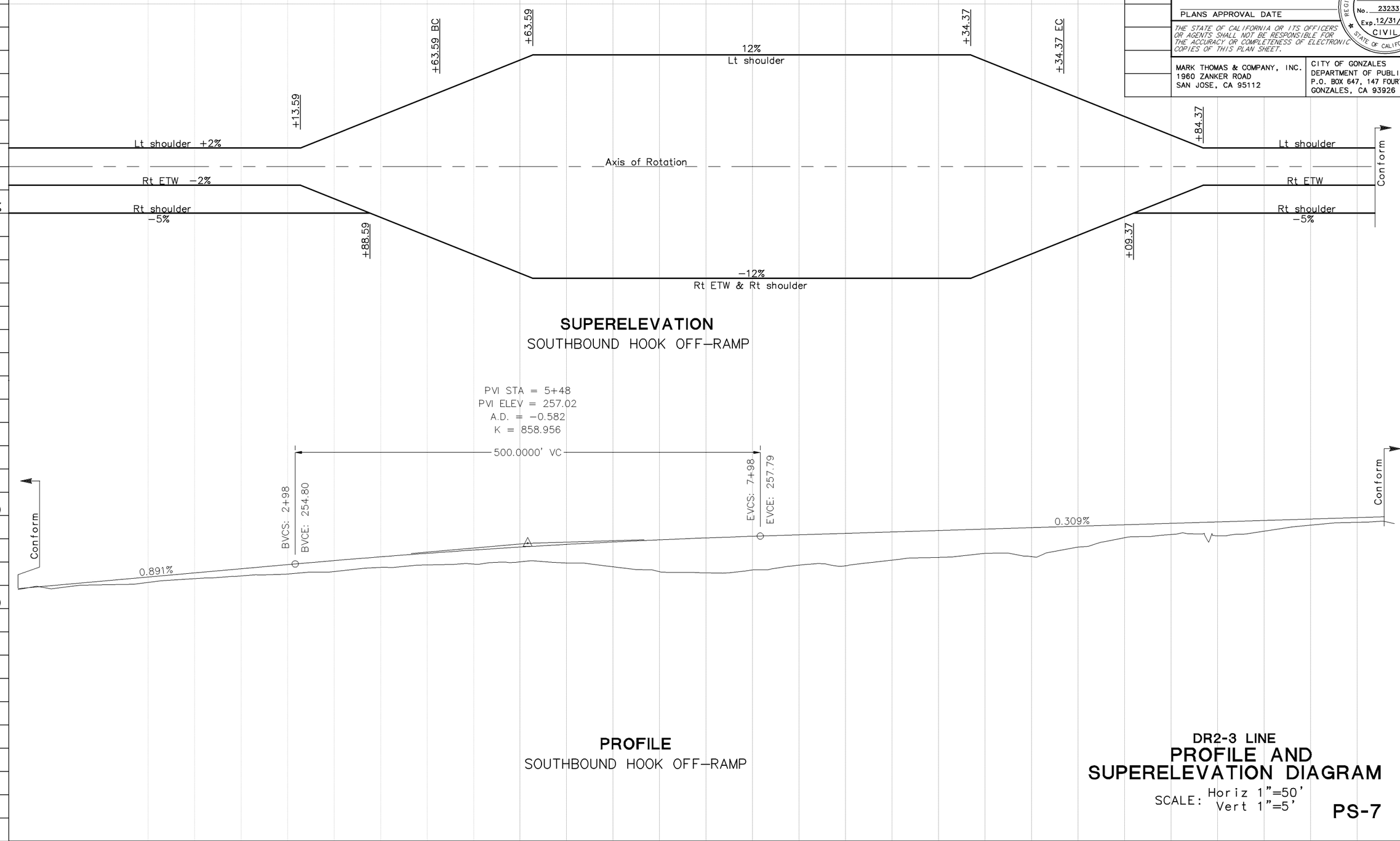

SUPERELEVATION
SOUTHBOUND HOOK OFF-RAMP

PROFILE
SOUTHBOUND HOOK OFF-RAMP

DR2-3 LINE
PROFILE AND SUPERELEVATION DIAGRAM
SCALE: Horiz 1"=50'
Vert 1"=5'

PS-7

STATION	0	1	2	3	4	5	6	7	8	9	10+00	11	12	13	14	TOTAL
CY Exc																
CY Emb																

REVISED BY | DATE REVISED | CALCULATED-DESIGNED BY | CHECKED BY | CONSULTANT FUNCTIONAL SUPERVISOR

STATE OF CALIFORNIA - DEPARTMENT OF TRANSPORTATION
Caltrans

LAST REVISION 00-00-00 | DATE PLOTTED => 10-21-2010 | TIME PLOTTED => 2:12 PM

W:\Gonzales-56-0156B-US101-Gloria Rd IC\CADD\PS&E\56-0156B-P7.dwg 10/21/2010 2:12 PM

Dist	COUNTY	ROUTE	POST MILES TOTAL PROJECT	SHEET No.	TOTAL SHEETS
05	MON	101	68.4/70.4		

REGISTERED CIVIL ENGINEER DATE

PLANS APPROVAL DATE

REGISTERED PROFESSIONAL ENGINEER RICHARD K TANAKA No. 23233 Exp. 12/31/11 CIVIL STATE OF CALIFORNIA

THE STATE OF CALIFORNIA OR ITS OFFICERS OR AGENTS SHALL NOT BE RESPONSIBLE FOR THE ACCURACY OR COMPLETENESS OF ELECTRONIC COPIES OF THIS PLAN SHEET.

MARK THOMAS & COMPANY, INC.
1960 ZANKER ROAD
SAN JOSE, CA 95112

CITY OF GONZALES
DEPARTMENT OF PUBLIC WORKS
P.O. BOX 647, 147 FOURTH STREET
GONZALES, CA 93926

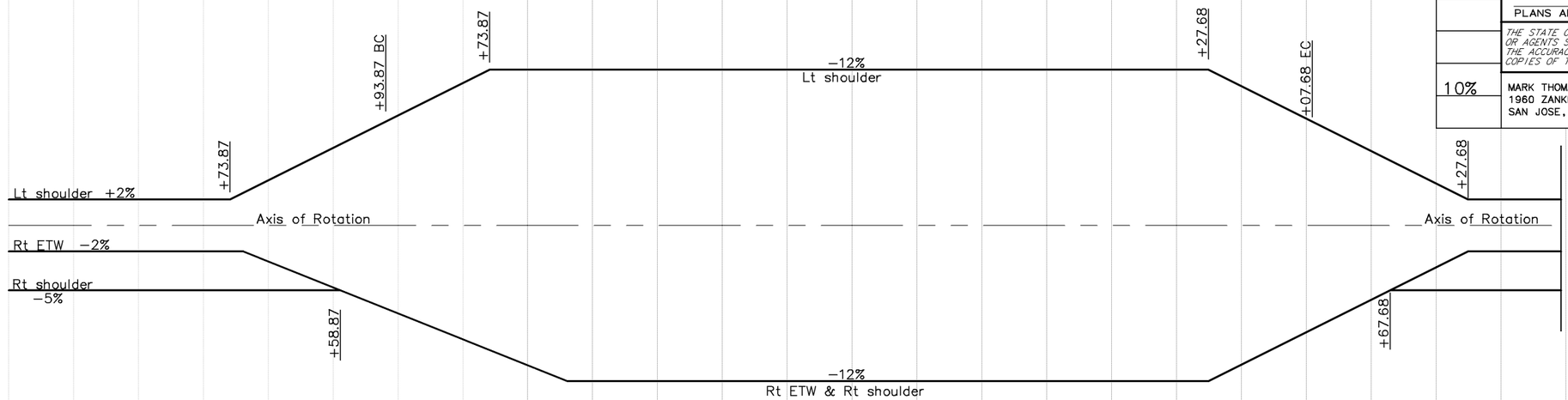

SUPERELEVATION
SOUTHBOUND HOOK ON-RAMP

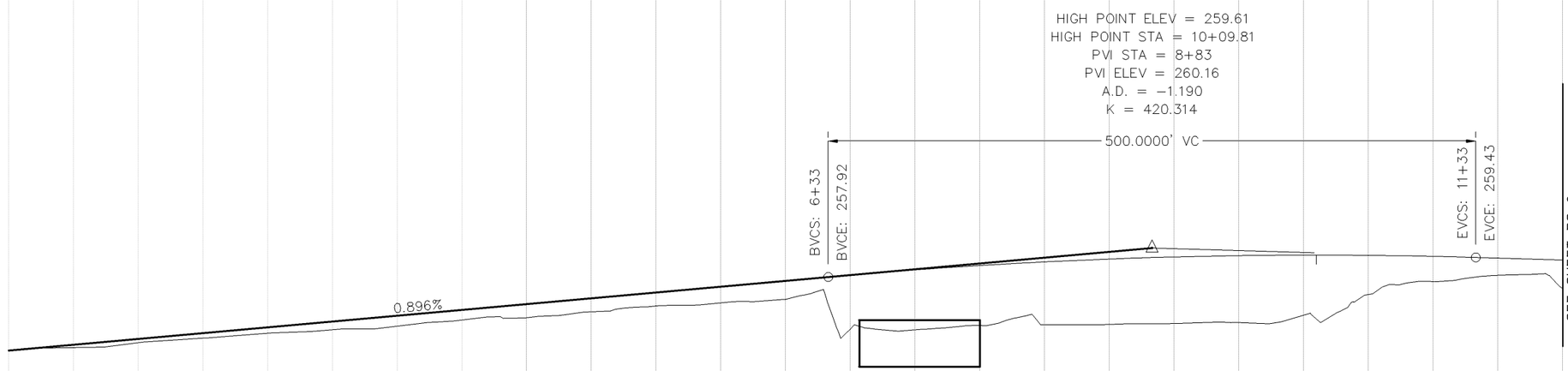

PROFILE
SOUTHBOUND HOOK ON-RAMP

HR2-3 LINE
PROFILE AND SUPERELEVATION DIAGRAM

SCALE: Horiz 1"=50'
Vert 1"=5'

PS-8

STATION	0	1	2	3	4	5	6	7	8	9	10+00	11	12	TOTAL
CY Exc														
CY Emb														

REVISED BY | DATE REVISED | CALCULATED-DESIGNED BY | CHECKED BY | CONSULTANT FUNCTIONAL SUPERVISOR

STATE OF CALIFORNIA - DEPARTMENT OF TRANSPORTATION

Caltrans

LAST REVISION 00-00-00 | DATE PLOTTED => 10-21-2010 | TIME PLOTTED => 2:14 PM

W:\Gonzales-56-0156B-US101-Gloria Rd 1C\CADD\PS&E\56-0156B-P8-9.dwg 10/21/2010 2:14 PM

Dist	COUNTY	ROUTE	POST MILES TOTAL PROJECT	SHEET No.	TOTAL SHEETS
05	MON	101	68.4/70.4		

REGISTERED CIVIL ENGINEER DATE

PLANS APPROVAL DATE

REGISTERED PROFESSIONAL ENGINEER
RICHARD K TANAKA
No. 23233
Exp. 12/31/11
CIVIL
STATE OF CALIFORNIA

THE STATE OF CALIFORNIA OR ITS OFFICERS OR AGENTS SHALL NOT BE RESPONSIBLE FOR THE ACCURACY OR COMPLETENESS OF ELECTRONIC COPIES OF THIS PLAN SHEET.

MARK THOMAS & COMPANY, INC.
1960 ZANKER ROAD
SAN JOSE, CA 95112

CITY OF GONZALES
DEPARTMENT OF PUBLIC WORKS
P.O. BOX 647, 147 FOURTH STREET
GONZALES, CA 93926

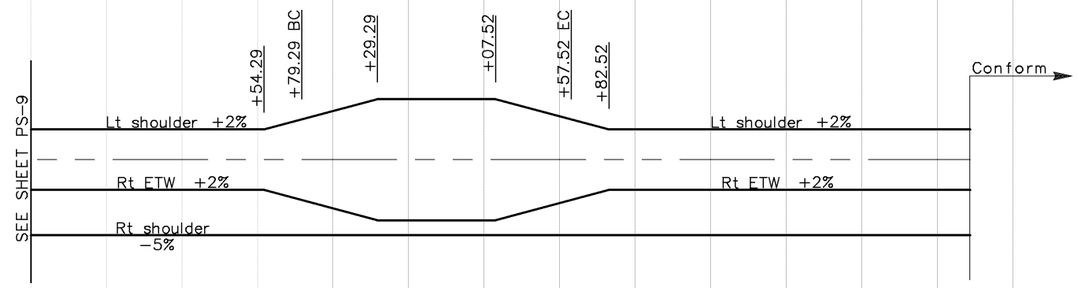

SUPERELEVATION
SOUTHBOUND HOOK ON-RAMP

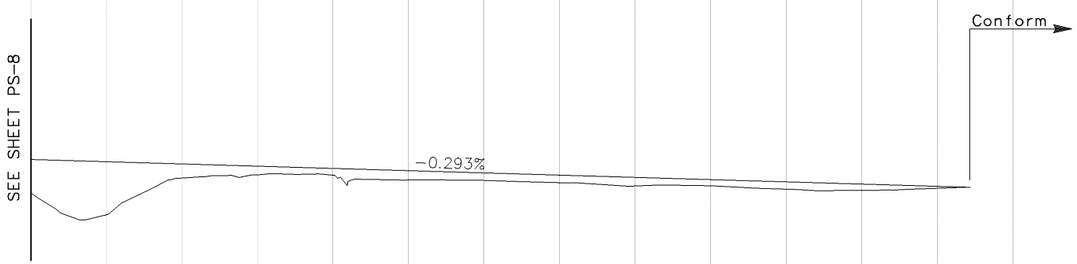

PROFILE
SOUTHBOUND HOOK ON-RAMP

HR2-3 LINE
PROFILE AND SUPERELEVATION DIAGRAM

SCALE: Horiz 1"=50'
Vert 1"=5'

PS-9

5%
0
-5%
260
250

STATION	12	13	14	15	16	17	18	TOTAL
CY Exc								
CY Emb								

REVISED BY | DATE REVISED

CALCULATED-DESIGNED BY | CHECKED BY

CONSULTANT FUNCTIONAL SUPERVISOR

STATE OF CALIFORNIA - DEPARTMENT OF TRANSPORTATION

Caltrans

LAST REVISION 00-00-00 | DATE PLOTTED => 10-21-2010 | TIME PLOTTED => 2:14 PM

W:\Gonzales-56-0156B-HS101-Gloria Rd IC\CADD\PS&E\56-0156B-P8-9.dwg 10/21/2010 2:14 PM

BORDER LAST REVISED 3/1/2007 | RELATIVE BORDER SCALE IS IN INCHES 0 1 2 3 | USERNAME => Bnguyen | DGN FILE => 56-0156B-P8-9.dwg | CU 00000 | 05-0P930K

Dist	COUNTY	ROUTE	POST MILES TOTAL PROJECT	SHEET No.	TOTAL SHEETS
05	MON	101	68.4/70.4		

REGISTERED CIVIL ENGINEER DATE

PLANS APPROVAL DATE

REGISTERED PROFESSIONAL ENGINEER
RICHARD K TANAKA
No. 23233
Exp. 12/31/11
CIVIL
STATE OF CALIFORNIA

THE STATE OF CALIFORNIA OR ITS OFFICERS OR AGENTS SHALL NOT BE RESPONSIBLE FOR THE ACCURACY OR COMPLETENESS OF ELECTRONIC COPIES OF THIS PLAN SHEET.

MARK THOMAS & COMPANY, INC.
1960 ZANKER ROAD
SAN JOSE, CA 95112

CITY OF GONZALES
DEPARTMENT OF PUBLIC WORKS
P.O. BOX 647, 147 FOURTH STREET
GONZALES, CA 93926

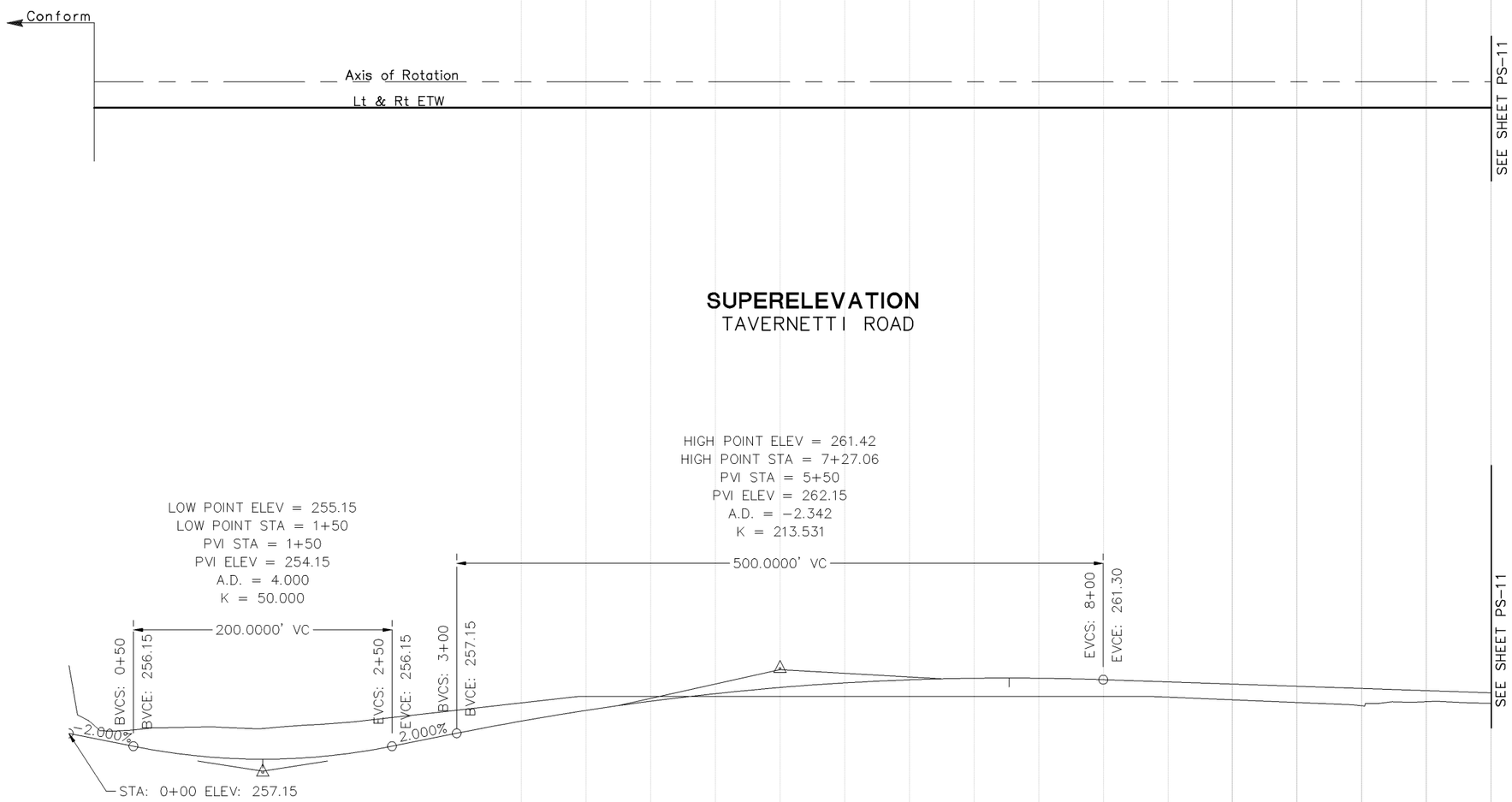

SUPERELEVATION
TAVERNETTI ROAD

PROFILE
TAVERNETTI ROAD

FR2A LINE
PROFILE AND SUPERELEVATION DIAGRAM

SCALE: Horiz 1"=50'
Vert 1"=5'

PS-10

REVISED BY | DATE REVISED
CALCULATED-DESIGNED BY | CHECKED BY
CONSULTANT FUNCTIONAL SUPERVISOR
STATE OF CALIFORNIA - DEPARTMENT OF TRANSPORTATION
Caltrans

LAST REVISION 00-00-00
DATE PLOTTED => 10-21-2010
TIME PLOTTED => 2:15 PM

W:\Gonzales-56-0156B-US101-Gloria Rd IC\CADD\PS&E\56-0156B-P10-11.dwg 10/21/2010 2:15 PM

Dist	COUNTY	ROUTE	POST MILES TOTAL PROJECT	SHEET No.	TOTAL SHEETS
05	MON	101	68.4/70.4		

REGISTERED CIVIL ENGINEER DATE

PLANS APPROVAL DATE

REGISTERED PROFESSIONAL ENGINEER
RICHARD K TANAKA
No. 23233
Exp. 12/31/11
CIVIL
STATE OF CALIFORNIA

THE STATE OF CALIFORNIA OR ITS OFFICERS OR AGENTS SHALL NOT BE RESPONSIBLE FOR THE ACCURACY OR COMPLETENESS OF ELECTRONIC COPIES OF THIS PLAN SHEET.

MARK THOMAS & COMPANY, INC.
1960 ZANKER ROAD
SAN JOSE, CA 95112

CITY OF GONZALES
DEPARTMENT OF PUBLIC WORKS
P.O. BOX 647, 147 FOURTH STREET
GONZALES, CA 93926

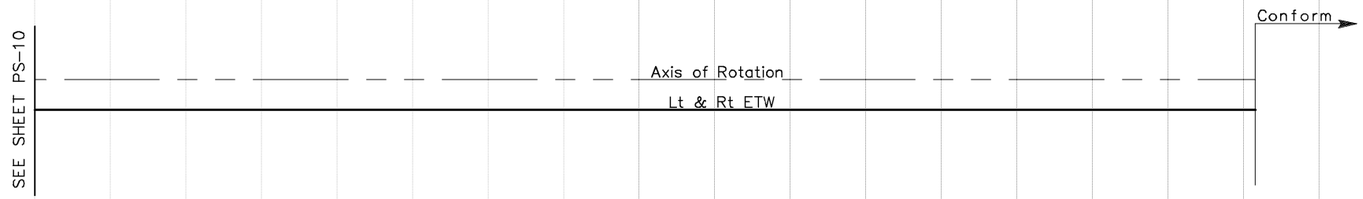

SUPERELEVATION
TAVERNETTI ROAD

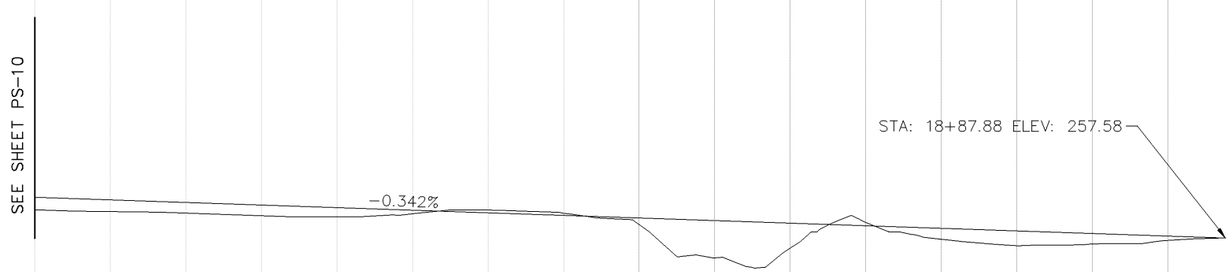

PROFILE
TAVERNETTI ROAD

FR2A LINE
PROFILE AND SUPERELEVATION DIAGRAM

SCALE: Horiz 1"=50'
Vert 1"=5'

PS-11

STATION	0	1	2	3	4	5	6	7	TOTAL
CY Exc									
CY Emb									

STATE OF CALIFORNIA - DEPARTMENT OF TRANSPORTATION
Caltrans

CONSULTANT FUNCTIONAL SUPERVISOR | CALCULATED-DESIGNED BY | CHECKED BY | REVISED BY | DATE REVISED

LAST REVISION 00-00-00 | DATE PLOTTED => 10-21-2010 | TIME PLOTTED => 2:15 PM

W:\Gonzales-56-0156B-US101-Gloria Rd IC\CADD\PSR\56-0156B-P10-11.dwg 10/21/2010 2:15 PM

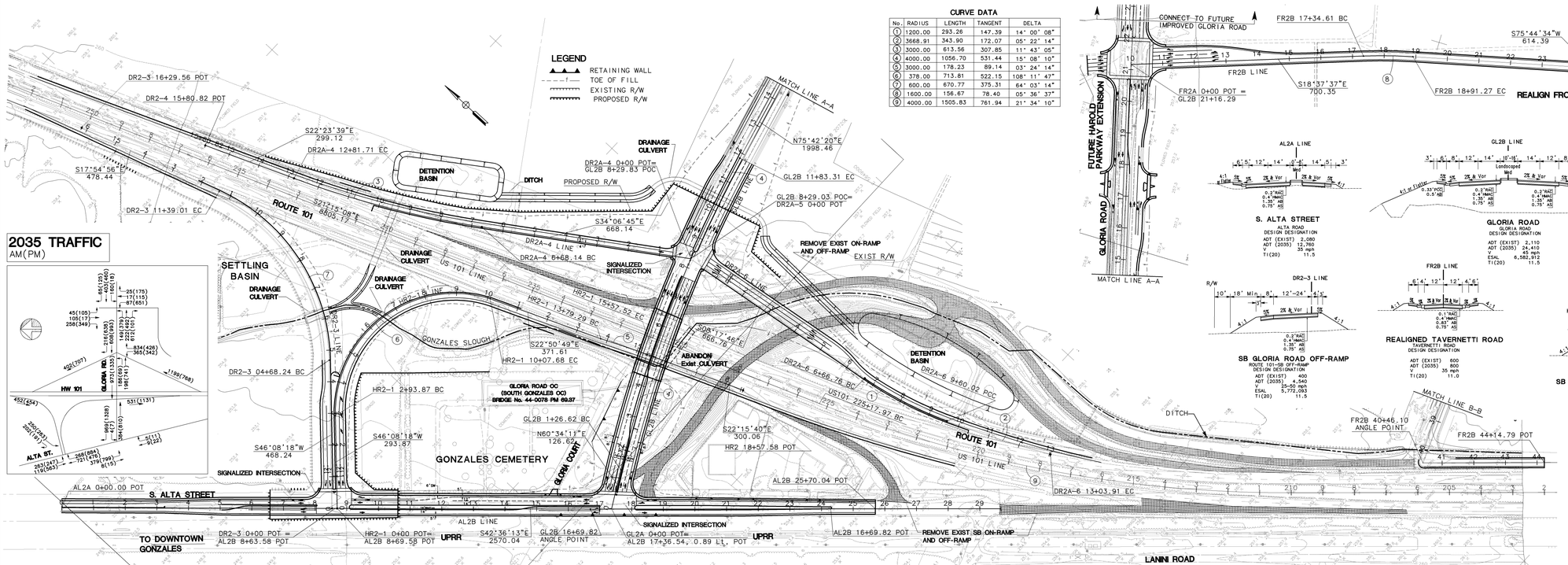

CURVE DATA

No.	RADIUS	LENGTH	TANGENT	DELTA
1	1200.00	293.26	147.39	14° 00' 08"
2	3668.91	343.90	172.07	05° 22' 14"
3	3000.00	613.56	307.85	11° 43' 05"
4	4000.00	1056.70	531.44	15° 08' 10"
5	3000.00	178.23	89.14	03° 24' 14"
6	378.00	713.81	522.15	108° 11' 47"
7	600.00	670.77	375.31	64° 03' 14"
8	1600.00	156.67	78.40	05° 36' 37"
9	4000.00	1505.83	761.94	21° 34' 10"

GEOMETRIC PLAN
US 101/GLORIA ROAD IC IMPROVEMENT
BUILD ALTERNATIVE
05-MON-101 - PM 68.4/70.4; EA 05-0P930K

MARK THOMAS & COMPANY, INC.
Providing Engineering, Surveying and Planning Services
1960 ZANKER ROAD, SAN JOSE, CA 95112 (408) 453-5373

DESIGNED BY
CHECKED BY
DATE 11-12-09
SCALE 1"=100'
APPROVED ON
BY
REC NO.
JOB NO.
SHEET
FILE NO.
OF
EA NO. 05-0P930K

CURVE DATA

No.	RADIUS	LENGTH	TANGENT	DELTA
1	1600.00	156.67	78.40	05° 36' 37"
2	3668.91	343.90	172.07	05° 22' 14"
3	1200.00	293.26	147.36	14° 00' 08"
4	3000.00	613.56	307.85	11° 43' 05"
5	4000.00	1056.70	531.44	15° 08' 10"
6	4000.00	1505.83	761.94	21° 34' 10"

LEGEND

- RETAINING WALL
- TOE OF FILL
- EXISTING R/W
- PROPOSED R/W

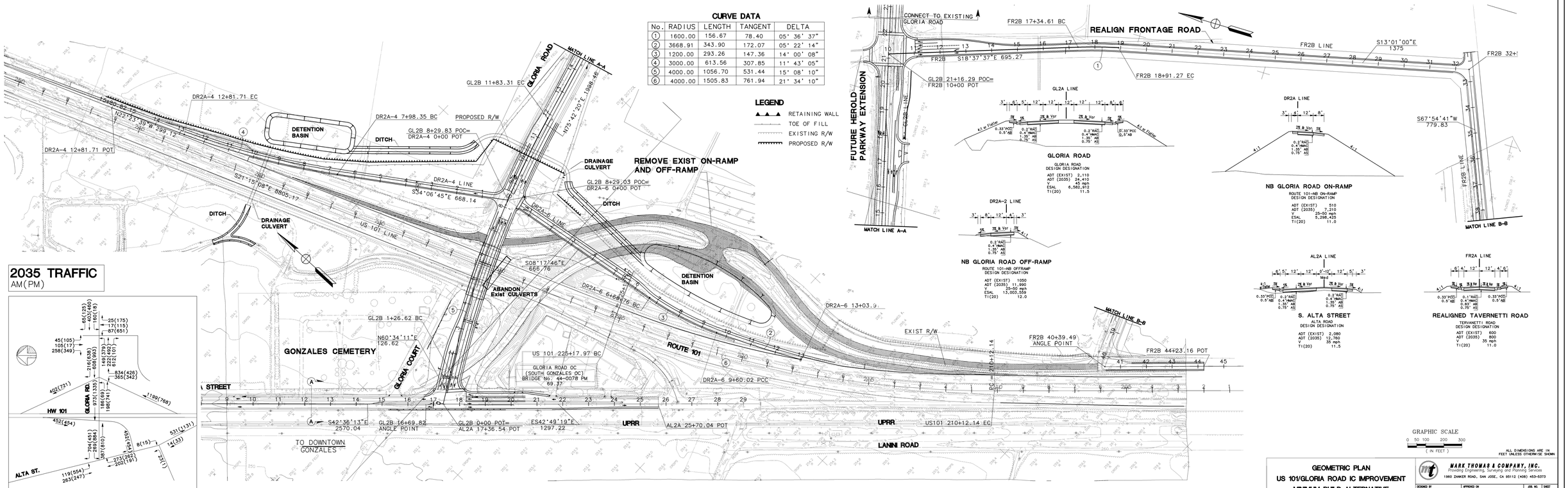

GEOMETRIC PLAN
US 101/GLORIA ROAD IC IMPROVEMENT
MINIMUM BUILD ALTERNATIVE
05-MON-101 - PM 68.4/70.4; EA 05-0P930K

MARK THOMAS & COMPANY, INC.
Providing Engineering, Surveying and Planning Services
1960 ZANKER ROAD, SAN JOSE, CA 95112 (408) 453-5373

DESIGNED BY	APPROVED ON	JOB NO.	SHEET
CHECKED BY	BY	FILE NO.	OF
DATE 11-12-09			
SCALE 1"=100'	REV. NO.		

EA NO. 05-0P930K

ATTACHMENT D

Preliminary Cost Estimates

PSR Cost Estimate

District-County-Route	05-Mon-101
PM	68.4/70.4
EA	05-0P930K
Program Code	

PROJECT DESCRIPTION:

Limits US 101 between1.0 mile north and south of Gloria Road interchange

Gloria Road Between Alta Street and Herold Parkway

Proposed Improvement (Scope) Reconstruct US101/Gloria Road interchange

Alternate Ultimate Improvement

SUMMARY OF PROJECT COST ESTIMATE

TOTAL ROADWAY ITEMS		$25,470,000
TOTAL STRUCTURE ITEMS		$4,730,000
	SUBTOTAL CONSTRUCTION COSTS	$30,200,000
TOTAL RIGHT OF WAY ITEMS*		$3,800,000
	TOTAL PROJECT CAPITAL OUTLAY COSTS	**$34,000,000**

* Right-of-way costs are escalated to 2015 dollars at 3%/year.

Reviewed by District Program Manager _____
(Signature)

Approved by City Project Manager _____ Date 03/31/11
(Signature)

Phone No. (831) 675-4205

District-County-Route	05-Mon-101
PM	68.4/70.4
EA	05-0P930K

I. ROADWAY ITEMS

	Quantity	Unit	Unit Price	Unit Cost	Section Cost
Section 1 - Earthwork					
Roadway Excavation	42,000	CY	$18	$756,000	
Imported Borrow	94,000	CY	$10	$940,000	
Clearing & Grubbing	1	LS	$200,000	$200,000	
Develop Water Supply	1	LS	$20,000	$20,000	
Remove AC Pavement	157,000	SQFT	$1	$157,000	
Remove Median Curb		LF			
Remove Sidewalk		SF			
Remove Concrete		SF			
Roadway Excavation (ADL)	10,000	CY	$275	$2,750,000	
Remove Curb and Gutter		LF			
Lead Compliance Plan	1	LS	$5,000	$5,000	
				Subtotal Earthwork	$4,828,000
Section 2 - Pavement Structural Section *					
RHMAC (0.1')	3,640	Ton	$100	$364,000	
HMAC (0.4')	15,300	Ton	$100	$1,530,000	
Aggregate Base CL 2 (1.35')	25,000	CY	$50	$1,250,000	
Aggregate Subbase CL 2 (0.75')	16,000	CY	$30	$480,000	
Pavement Reinforcing Fabrics		SQFT			
Edge Drains		LF			
				Subtotal Pavement Structural Section	$3,624,000
Section 3 - Drainage					
Storm Drains	1	LS	$500,000	$500,000	
Large Culverts	600	LF	$500	$300,000	
Bore and jack RCB	250	LF	$1,500	$375,000	
				Subtotal Drainage	$1,175,000

District-County-Route	05-Mon-101
PM	68.4/70.4
EA	05-0P930K

	Quantity	Unit	Unit Price	Unit Cost	Section Cost
Section 4 - Specialty Items					
Remove Tree	12	EA	$500	$6,000	
Sign Furnishing					
Chain Link Fence (6')	4,000	LF	$20	$80,000	
Chain Link Fence (4')	800	LF	$18	$15,000	
Retaining Wall (Steel)	25,000	LBS	$1.50	$38,000	
Retaining Wall (Concrete)	650	CY	$620	$403,000	
Retaining Wall Aesthetics	1	LS	$150,000	$150,000	
Concrete Barriers	800	LF	$75	$60,000	
Curb & Gutter	6,300	LF	$22	$139,000	
Median Curb	4,000	LF	$18	$72,000	
Sidewalk (Broom Finish)	38,000	SQFT	$8	$304,000	
Curb Ramps	18	EA	$1,400	$26,000	
Prepare SWPPP	1	LS	$10,000	$10,000	
Construction Site BMP	1	LS	$340,000	$340,000	
PermanentTreatment BMP	1	LS	$280,000	$280,000	
Environmental Mitigation	1	LS	$250,000	$250,000	
Hazardous Material Removal	1	LS	$50,000	$50,000	
Biological Mitigation	1	LS	$300,000	$300,000	
				Subtotal Specialty Items	$2,523,000
Section 5 - Traffic Items					
Lighting	42	EA	$5,000	$210,000	
Remove Existing Light	20	EA	$500	$10,000	
Traffic Stripe	1	LS	$50,000	$50,000	
Pavement Markings					
Traffic Signals (New)	4	EA	$250,000	$1,000,000	
Ramp Metering	2	EA	$80,000	$160,000	
Roadside Signs	1	LS	$80,000	$80,000	
Traffic Control / Staging (7% of Sec 1-4)	1	LS	$1,000,000	$1,000,000	
Traffic Management Plan	1	LS	$150,000	$150,000	
				Subtotal Traffic Items	$2,660,000
Section 6 - Planting and Irrigation					
Highway Planting	1	LS	$500,000	$500,000	
Median Landscaping	20,000	SQFT	$15	$300,000	
Irrigation	1	LS	$135,000	$135,000	
Irrigation Crossovers	1	LS			
				Subtotal Planting and Irrigation Section	$935,000
Section 7 - Roadside Management and Safety Section					
Gore Area Pavement	90	CY	$400	$36,000	
Erosion Control	10	AC	$10,000	$100,000	
Maintenance Vehicle Pullouts	4	EA	$8,000	$32,000	
Construction Site Management	1	LS	$50,000	$50,000	
				Subtotal Roadside Management and Safety Section	$218,000
				TOTAL SECTIONS 1 thru 7:	$15,963,000

District-County-Route	05-Mon-101
PM	68.4/70.4
EA	05-0P930K

Section 8 - Minor Items

$15,963,000 X 10% = $1,596,300
(Subtotal Sections 1 thru 7)

TOTAL MINOR ITEMS $1,597,000

Section 9 - Roadway Mobilization

$17,560,000 X 10% = $1,756,000
(Subtotal Sections 1 thru 8)

TOTAL ROADWAY MOBILIZATION $1,756,000

Section 10 - Roadway Additions

Supplemental Work
$17,560,000 X 10% $1,756,000
(Subtotal Sections 1 thru 8)

Contingencies
$17,560,000 X 25% $4,390,000
(Subtotal Sections 1 thru 8)

TOTAL ROADWAY ADDITIONS $6,146,000

TOTAL ROADWAY ITEMS $25,470,000
(Subtotal Sections 1 thru 10)

Estimate Prepared By Ben Nguyen (Print Name) Phone# (408) 453-5373 Date 2/25/2011

Estimate Checked By Daniel Ho (Print Name) Phone# (408) 453-5373 Date 2/25/2011

** Use appropriate percentage per Chapter 20 of Project Development Procedures Manual.**

District-County-Route	05-Mon-101
PM	68.4/70.4
EA	05-0P930K

II. STRUCTURES ITEMS

	Structure (1)	Structure (2)	Structure (3)	
Bridge Name	US101/Gloria Rd OC			
Structure Type	CIP			
Width (out to out) - (ft)	94			
Span Length (ft)	195.00			
Total Area (ft^2)	18,330			
Footing Type (pile/spread)				
Cost Per ft^2 (Incl. 10% mobilization and 20% contingency)	$250			
Total Cost For Structure	4,582,500			
			SUBTOTAL STRUCTURES ITEMS (Sum of Total Cost for Structures)	$4,582,500
OTHER ITEMS				
Railroad Related Costs:				
Bridge Removal	150,000			$150,000
			SUBTOTAL OTHER ITEMS	$150,000
			TOTAL STRUCTURE ITEMS (Sum of Structures Items plus Other Items)	$4,730,000

COMMENTS:

Estimate Prepared By Tom Walker (Print Name) Phone# (408) 453-5373 Date 03-31-2011

District-County-Route	05-Mon-101
PM	68.4/70.4
EA	05-0P930K

III. RIGHT OF WAY ITEMS

	ESCALATED VALUE
A. Acquisition, including excess lands, damages to remainder(s) and Goodwill	$2,675,000
B. Utility Relocation	$875,000
C. Relocation Assistance	$70,000
D. Clearance/Demolition	$25,000
E. Title and Escrow Fees	$150,000
TOTAL RIGHT OF WAY ITEMS (Escalated Value)	$3,800,000
Anticipated Date of Right of Way Certification (Date to which Values are Escalated)	10/28/2015

F. Construction Contract Work: $ _____

Brief Description of Work:

_____

_____

_____

Right of Way Branch Cost Estimate for Work * $ _____

* This dollar amount is to be included in the Roadway and/or Structures items of Work, as appropriate. Do not include in Right of Way Items.

COMMENTS:

Estimate Prepared By Ben Nguyen Phone # (408) 453-5373 Date 03-31-2011

PSR Cost Estimate

District-County-Route	05-Mon-101
PM	68.4/70.4
EA	05-0P930K
Program Code	

PROJECT DESCRIPTION:

Limits US 101 between1.0 mile north and south of Gloria Road interchange

Gloria Road Between Alta Street and Herold Parkway

Proposed Improvement (Scope) Reconstruct US101/Gloria Road interchange

Alternate 2035 Minimum Build Improvement

SUMMARY OF PROJECT COST ESTIMATE

TOTAL ROADWAY ITEMS		$18,320,000
TOTAL STRUCTURE ITEMS		$3,680,000
	SUBTOTAL CONSTRUCTION COSTS	$22,000,000
TOTAL RIGHT OF WAY ITEMS*		$3,000,000
	TOTAL PROJECT CAPITAL OUTLAY COSTS	**$25,000,000**

* Right-of-way costs are escalated to 2015 dollars at 3%/year.

Reviewed by District Program Manager _____
(Signature)

Approved by City Project Manager _____ Date 03/31/11
(Signature)

Phone No. (831) 675-4205

District-County-Route	05-Mon-101
PM	68.4/70.4
EA	05-0P930K

I. ROADWAY ITEMS

	Quantity	Unit	Unit Price	Unit Cost	Section Cost
Section 1 - Earthwork					
Roadway Excavation	25,000	CY	$18	$450,000	
Imported Borrow	74,000	CY	$10	$740,000	
Clearing & Grubbing	1	LS	$120,000	$120,000	
Develop Water Supply	1	LS	$10,000	$10,000	
Remove AC Pavement	110,000	SQFT	$1	$110,000	
Remove Median Curb		LF			
Remove Sidewalk		SF			
Remove Concrete		SF			
Roadway Excavation (ADL)	5,000	CY	$275	$1,375,000	
Remove Curb and Gutter		LF			
Lead Compliance Plan	1	LS	$3,000	$3,000	
				Subtotal Earthwork	$2,808,000
Section 2 - Pavement Structural Section *					
RHMAC (0.1')	3,400	Ton	$100	$340,000	
HMAC (0.4')	14,300	Ton	$100	$1,430,000	
Aggregate Base CL 2 (1.35')	23,100	CY	$50	$1,155,000	
Aggregate Subbase CL 2 (0.75')	12,700	CY	$30	$381,000	
Pavement Reinforcing Fabrics		SQFT			
Edge Drains		LF			
				Subtotal Pavement Structural Section	$3,306,000
Section 3 - Drainage					
Storm Drains	1	LS	$400,000	$400,000	
Large Culverts	440	LF	$500	$220,000	
Bore and jack RCB	250	LF	$1,500	$375,000	
				Subtotal Drainage	$995,000

District-County-Route	05-Mon-101
PM	68.4/70.4
EA	05-0P930K

	Quantity	Unit	Unit Price	Unit Cost	Section Cost
Section 4 - Specialty Items					
Remove Tree	12	EA	$500	$6,000	
Sign Furnishing					
Chain Link Fence (6')	4,100	LF	$20	$82,000	
Chain Link Fence (4')	800	LF	$18	$15,000	
Retaining Wall (Steel)	24,300	LBS	$1.50	$37,000	
Retaining Wall (Concrete)	600	CY	$620	$372,000	
Retaining Wall Aesthetics	1	LS	$150,000	$150,000	
Concrete Barriers	800	LF	$75	$60,000	
Curb & Gutter	3,300	LF	$22	$73,000	
Median Curb		LF	$18		
Sidewalk (Broom Finish)	20,000	SQFT	$8	$160,000	
Curb Ramps	10	EA	$1,400	$14,000	
Prepare SWPPP	1	LS	$7,000	$7,000	
Construction Site BMP	1	LS	$260,000	$260,000	
PermanentTreatment BMP	1	LS	$210,000	$210,000	
Environmental Mitigation	1	LS	$200,000	$200,000	
Hazardous Material Removal	1	LS	$40,000	$40,000	
Biological Mitigation	1	LS	$220,000	$220,000	
				Subtotal Specialty Items	$1,906,000
Section 5 - Traffic Items					
Lighting	30	EA	$5,000	$150,000	
Remove Existing Light	10	EA	$500	$5,000	
Traffic Stripe	1	LS	$40,000	$40,000	
Pavement Markings					
Traffic Signals (New)	3	EA	$250,000	$750,000	
Ramp Metering	1	EA	$80,000	$80,000	
Roadside Signs	1	LS	$40,000	$40,000	
Traffic Control / Staging (7% of Sec 1-4)	1	LS	$700,000	$700,000	
Traffic Management Plan	1	LS	$100,000	$100,000	
				Subtotal Traffic Items	$1,865,000
Section 6 - Planting and Irrigation					
Highway Planting	1	LS	$350,000	$350,000	
Median Landscaping		SQFT	$15		
Irrigation	1	LS	$100,000	$100,000	
Irrigation Crossovers	1	LS			
				Subtotal Planting and Irrigation Section	$450,000
Section 7 - Roadside Management and Safety Section					
Gore Area Pavement	50	CY	$400	$20,000	
Erosion Control	8	AC	$10,000	$80,000	
Maintenance Vehicle Pullouts	2	EA	$8,000	$16,000	
Construction Site Management	1	LS	$35,000	$35,000	
				Subtotal Roadside Management and Safety Section	$151,000
				TOTAL SECTIONS 1 thru 7:	$11,481,000

District-County-Route	05-Mon-101
PM	68.4/70.4
EA	05-0P930K

Section 8 - Minor Items

$11,481,000 X 10% = $1,148,100
(Subtotal Sections 1 thru 7)

TOTAL MINOR ITEMS $1,149,000

Section 9 - Roadway Mobilization

$12,630,000 X 10% = $1,263,000
(Subtotal Sections 1 thru 8)

TOTAL ROADWAY MOBILIZATION $1,263,000

Section 10 - Roadway Additions

Supplemental Work
$12,630,000 X 10% $1,263,000
(Subtotal Sections 1 thru 8)

Contingencies
$12,630,000 X 25% $3,157,500
(Subtotal Sections 1 thru 8)

TOTAL ROADWAY ADDITIONS $4,421,000

TOTAL ROADWAY ITEMS $18,320,000
(Subtotal Sections 1 thru 10)

Estimate Prepared By Ben Nguyen (Print Name) Phone# (408) 453-5373 Date 2/25/2011

Estimate Checked By Daniel Ho (Print Name) Phone# (408) 453-5373 Date 2/25/2011

** Use appropriate percentage per Chapter 20 of Project Development Procedures Manual.**

District-County-Route	05-Mon-101
PM	68.4/70.4
EA	05-0P930K

II. STRUCTURES ITEMS

	Structure (1)	Structure (2)	Structure (3)	
Bridge Name	US101/Gloria Rd OC			
Structure Type	CIP			
Width (out to out) - (ft)	72			
Span Length (ft)	195.00			
Total Area (ft^2)	14,120			
Footing Type (pile/spread)				
Cost Per ft^2 (Incl. 10% mobilization and 20% contingency)	$250			
Total Cost For Structure	3,530,000			
			SUBTOTAL STRUCTURES ITEMS (Sum of Total Cost for Structures)	$3,530,000
OTHER ITEMS				
Railroad Related Costs:				
Bridge Removal	150,000			$150,000
			SUBTOTAL OTHER ITEMS	$150,000
			TOTAL STRUCTURE ITEMS (Sum of Structures Items plus Other Items)	$3,680,000

COMMENTS:

Estimate Prepared By Tom Walker (Print Name) Phone# (408) 453-5373 Date 03-31-2011

District-County-Route	05-Mon-101
PM	68.4/70.4
EA	05-0P930K

III. RIGHT OF WAY ITEMS

	ESCALATED VALUE
A. Acquisition, including excess lands, damages to remainder(s) and Goodwill	$1,910,000
B. Utility Relocation	$875,000
C. Relocation Assistance	$70,000
D. Clearance/Demolition	$25,000
E. Title and Escrow Fees	$120,000
TOTAL RIGHT OF WAY ITEMS (Escalated Value)	$3,000,000
Anticipated Date of Right of Way Certification (Date to which Values are Escalated)	10/28/2015

F. Construction Contract Work: $ _____

Brief Description of Work:

_____

_____

_____

Right of Way Branch Cost Estimate for Work * $ _____

* This dollar amount is to be included in the Roadway and/or Structures items of Work, as appropriate. Do not include in Right of Way Items.

COMMENTS:

Estimate Prepared By Ben Nguyen Phone # (408) 453-5373 Date 03-31-2011

ATTACHMENT E

Right-of-Way Data Sheet

To: District Division Chief
Division of Right of Way and Land Surveys

Date: June 13, 2011

05 - Mon - 101 - 68.4/70.4

Attention: District Branch Chief
R/W Local Programs

Expense Authorization 05-0P930K

Subject: **RIGHT OF WAY DATA SHEET- LOCAL PUBLIC AGENCIES**

Project Description: **US 101/Gloria Road Interchange**

Right of way necessary for the subject project will be the responsibility of City of Gonzales.

The information in this data sheet was developed by Daniel Ho, Mark Thomas & Company, Inc.

I. ***Right of Way Engineering***

Will right of way engineering be required for this project?

- No
- Yes __x__ (Submit a copy of the *Right of Way Engineering, Surveys and Mapping Services checklist for Special Funded Projects*. This checklist includes but is not limited to the following items.)

  - Hard copy (base map) __X__
  - Appraisal map __X__
  - Acquisition Documents __X__
  - Property Transfer Documents __X__
  - R/W Record Map __X__
  - Record of Survey __X__

II. ***Engineering Surveys***

1. Is any surveying or photogrammetric mapping required?

   No _____ Yes __x__ (Complete the following)

   Both surveying and photogrammetric mapping will be performed during PA&ED or PS&E phase. The mapping will comply with Caltrans' ABC mapping submittal requirements.

2. Datum Requirements

   Yes __x__ Project will adhere to the following criteria.
   - Horizontal - datum policy is NAD 83, CA-HPGN, EPOCH 1991.35 and English system of units and measure.
   - Vertical - datum policy is NAVD 88.
   - Units - metric is not required.

   No _____ Provide an explanation on additional page.

3. Will land survey monument perpetuation be scoped into the project, if required?

   Yes __x__

   No _____ Provide explanation on additional page.

III. ***Parcel Information (Land and Improvements)***

Are there any property rights required within the proposed project limits?

No _____ Yes __x__ (Complete the following)

	Part Take	Full Take	Estimate $
A. Number of Vacant Land Parcels	0	0	$ 0
B. Number of Single Family Residential Units	0	1	$ 344,000
C. Number of Multi-Family Residential Units	0	0	$ 0
D. Number of Commercial/Industrial Parcels	2	0	$ 716,000
E. Number of Farm/Agricultural Parcels	4	0	$1,080,000
F. Permanent and/or Temporary Easements (See discussion in "Remarks" Section)	1	0	$ 0
G. Other Parcels (define in "Remarks" section)	2	1	$ 0
Totals (2011 Dollars):	9	2	$2,140,000
Totals (with 25% contingency)			$2,675,000

Provide a general description of the right of way and excess lands required (zoning, use, improvements, critical, or sensitive parcels, etc.).

The following table provides additional information relating to the impacted parcels:

R/W No.	Owner(s) Assessor's Parcel No.	Type	Acquisition
1	City of Gonzales 020-201-022	Public (City)	Partial
2	Pacific Wine Partners LLC 020-201-021	Industrial	Partial
3	Gonzales Cemetery District 257-011-001	Private (Cemetery)	Full
4	Rianda Family Limited Partnership 223-032-019	currently agricultural, Future Residential Development (Folleta Subdivision)	Partial
5	D'Arrigo Bros Co of California 223-032-020	currently agricultural, Future Residential Development (Sun Valley Subdivision)	Partial
6	Rianda Family Limited Partnership 257-021-021	Currently agricultural Future commercial development	Partial

R/W No.	Owner(s) Assessor's Parcel No.	Type	Acquisition
7	Teresa J Lopez 257-021-020	Residential	Full
8	Victor L Lanini 257-021-037	Industrial (Currently agricultural)	Partial
9	County of Monterey	Public (Tarvenetti Road)	Partial
10	Pacific Wine Partners LLC 020-201-019	Industrial	Partial

Based on the table above, two industrial parcels, two future residential and two commercial developments but currently agricultural parcels, one single family residential, one City of Gonzales parcel, one County road, and one Gonzales Cemetery District parcel will be impacted.

The future residential developments will accommodate the proposed interchange improvements; therefore, no impact to residential units is anticipated.

See Section V for excess land discussion.

IV. ***Dedications***

Are there any properties rights which have been acquired, or anticipate will be acquired, through the "dedication" process for the Project?

No __x__ Yes ____ (Complete the following)

Number of dedicated parcels __0__

Have the dedication parcel(s) been accepted by the municipality involved? __N/A__

V. ***Excess Lands / Relinquishments***

Are there Caltrans property rights which may become excess lands or potential relinquishment areas?

No ____ Yes __x__ (Provide an explanation on additional page.)

There will be some excess land due to the proposed interchange reconfiguration. The project proposes to relinquish the excess land to the City for a detention basin.

VI. ***Relocation Information***

Are relocation displacements anticipated?

No ____ Yes __x__ (Complete the following)

A. Number of Single Family Residential Units ____1____ $24,000
Estimated RAP Payments

B. Number of Multi-Family Residential Units ____0____ $ 0
Estimated RAP Payments

C. Number of Business/Nonprofit ____0____ $ 0

Estimated RAP Payments		
D. Number of Farms	0	$ 0
Estimated RAP Payments		
E. Other (define in the "Remarks" section)	0	$ 0
Estimated RAP Payments		
Totals	1	$24,000
Totals (with 25% contingency)		$30,000

VII. ***Utility Relocation Information***

Anticipate any utility facilities or utility rights of way to be affected?

No _____ Yes __x__ (Complete the following)

Facility	Owner	Estimated Relocation Expense: State Obligation * (2011 Dollars)	Local Obligation (2011 Dollars)	Utility Owner Obligation (2011 Dollars)
A. Telephone		$0	$60,000	$0
B. Electric		$0	$600,000	$0
C. Fiber Optic		$0	$40,000	$0
Totals		$0*	$700,000	$0
Number of facilities:			3	
With 25% contingency			$875,000	

*This amount reflects the estimated total financial obligation by the State.

Any additional information concerning utility involvement on this project?

It is anticipated that relocation of existing utilities due to the proposed interchange reconfiguration are considered project obligations/local share. Thus, the cost includes such work.

VIII. ***Rail Information***

Are railroad facilities or railroad rights of way affected?

No _____ Yes __X__ (Complete the following)

Describe railroad facilities or railroad rights of way affected.

Owner's Name	Transverse Crossing	Longitudinal Encroachment
A. Union Pacific Railroad		Construction Right-of-entry
B.		

Discuss types of agreements and rights required from the railroads. Are grade crossings that require services contracts, or grade separations requiring construction and maintenance agreements involved?

It is anticipated that right-of-entry will be needed from UPRR for the construction of the retaining wall adjacent to their right-of-way. No permanent easement is anticipated.

IX. ***Clearance Information***

Are there improvements that require clearance?

No _____ Yes _x_ (Complete the following)

A. Number of Structures to be Demolished ____1_____
Estimated Cost of Demolition $_20,000__

X. ***Hazardous Materials/Waste***

Are there any site(s) and/or improvements(s) in the Project Limits that are known to contain

hazardous materials? None _x_ Yes _____ (Explain in the "Remarks" section)

Are there any site(s) and/or improvement(s) in the Project Limits that are suspected to contain

hazardous waste? None _____ Yes _x_ (Explain in the "Remarks" section.)

XI. ***Project Scheduling***

	Proposed lead time	Completion date
* Preliminary Engineering, Surveys	24 (months)	01/2015
* R/W Engineering Submittals	6 (months)	12/2014
* R/W Appraisals/Acquisition	10 (months)	10/2015
Proposed Environmental Clearance		10/2014
Proposed R/W Certification		10/2015

XII. ***Proposed Funding***

	Local	State	Federal	Other
Acquisition	$2,675,000	$0	$0	$0
Utilities	$ 875,000	$0	$0	$0
Relocation Assistance Program	$ 30,000	$0	$0	$0
R/W Support	$ 360,000	$0	$0	$0
Cost (Eng. Appraisal, etc.)	$ 150,000	$0	$0	$0

XIII. ***Remarks:***

Section IIIF: Right-of-entry will be needed from UPRR for the construction of the retaining wall adjacent to the railroad right-of-way.

Section IIIG: Two partial takes (listed as Right of Way No. 1 and No. 9 in the table above) will be transferred from the City of Gonzales and County of Monterey to the State through Section 83 Land

Acquisition process. The required parcel from the Gonzales Cemetery District (Right of Way No. 3) is located south of Gloria Court. This is a separate parcel from the cemetery. The parcel is currently unused and no relocation of remains is anticipated. A portion of an adjacent property (Right of Way No. 2) will be acquired in exchange for this parcel. This additional property will extend the footprint of the Gonzales Cemetery to the north.

Section X, Hazardous Materials/Waste: There is a potential for aerially deposited lead (ADL) along the mainline adjacent to US 101 and the ramps. The soil in the unpaved areas that are subject to excavation will be tested for ADL, hydrocarbons and other contaminants during the design phase, prior to construction. It is expected that ADL contaminated soils will be re-used on-site in accordance with Caltrans' DTSC Variance. Additionally, the D'Arrigo Brothers' property is listed as potential UST site.

Project Sponsor Consultant

Prepared by:

Daniel Ho, P.E.
Project Manager
Mark Thomas & Company, Inc.

6/14/2011
Date

Project Sponsor

Reviewed and Approved by:

Carlos Lopez
Director of Public Works
City of Gonzales

6/14/2011
Date

Caltrans
Reviewed and accepted based on information provided to date:

Nancy Johnson
Caltrans District Branch Chief
Local Programs
Division of Right of Way

6/22/11
Date

To: District Division Chief
Division of Right of Way and Land Surveys

Date: June 13, 2011

05 - Mon - 101 - 68.4/70.4

Attention: District Branch Chief
R/W Local Programs

Expense Authorization 05-0P930K

Subject: **RIGHT OF WAY DATA SHEET- LOCAL PUBLIC AGENCIES**

Project Description: **US 101/Gloria Road Interchange (Minimum Build)**

Right of way necessary for the subject project will be the responsibility of City of Gonzales.

The information in this data sheet was developed by Daniel Ho, Mark Thomas & Company, Inc.

I. ***Right of Way Engineering***

Will right of way engineering be required for this project?

- No
- Yes __x__ (Submit a copy of the *Right of Way Engineering, Surveys and Mapping Services checklist for Special Funded Projects*. This checklist includes but is not limited to the following items.)

  - Hard copy (base map) __X__
  - Appraisal map __X__
  - Acquisition Documents __X__
  - Property Transfer Documents __X__
  - R/W Record Map __X__
  - Record of Survey __X__

II. ***Engineering Surveys***

1. Is any surveying or photogrammetric mapping required?

   No _____ Yes __x__ (Complete the following)

   Both surveying and photogrammetric mapping will be performed during PA&ED or PS&E phase. The mapping will comply with Caltrans' ABC mapping submittal requirements.

2. Datum Requirements

   Yes __x__ Project will adhere to the following criteria.
   - Horizontal - datum policy is NAD 83, CA-HPGN, EPOCH 1991.35 and English system of units and measure.
   - Vertical - datum policy is NAVD 88.
   - Units - metric is not required.

   No _____ Provide an explanation on additional page.

3. Will land survey monument perpetuation be scoped into the project, if required?

   Yes __x__

   No _____ Provide explanation on additional page.

III. ***Parcel Information (Land and Improvements)***

Are there any property rights required within the proposed project limits?

No _____ Yes __x__ (Complete the following)

	Part Take	Full Take	Estimate $
A. Number of Vacant Land Parcels	0	0	$ 0
B. Number of Single Family Residential Units	0	1	$ 344,000
C. Number of Multi-Family Residential Units	0	0	$ 0
D. Number of Commercial/Industrial Parcels	1	0	$ 122,000
E. Number of Farm/Agricultural Parcels	4	0	$1,080,000
F. Permanent and/or Temporary Easements (See discussion in "Remarks" Section)	1	0	$ 0
G. Other Parcels (define in "Remarks" section)	1	1	$ 0
Totals (2011 Dollars):	7	2	$1,546,000
Totals (with 25% contingency)			$1,933,000

Provide a general description of the right of way and excess lands required (zoning, use, improvements, critical, or sensitive parcels, etc.).

The following table provides additional information relating to the impacted parcels:

R/W No.	Owner(s) Assessor's Parcel No.	Type	Acquisition
1	Pacific Wine Partners LLC 020-201-021	Industrial	Partial
2	Gonzales Cemetery District 257-011-001	Private (Cemetery)	Full
3	Rianda Family Limited Partnership 223-032-019	currently agricultural, Future Residential Development (Folleta Subdivision)	Partial
4	D'Arrigo Bros Co of California 223-032-020	currently agricultural, Future Residential Development (Sun Valley Subdivision)	Partial
5	Rianda Family Limited Partnership 257-021-021	Currently agricultural Future commercial development	Partial
6	Teresa J Lopez 257-021-020	Residential	Full

R/W No.	Owner(s) Assessor's Parcel No.	Type	Acquisition
7	Victor L Lanini 257-021-037	Industrial (Currently agricultural)	Partial
8	County of Monterey	Public (Tarvenetti Road)	Partial

Based on the table above, one industrial parcel, two future residential and two commercial developments but currently agricultural parcels, one single family residential, one County road, and one Gonzales Cemetery District parcel will be impacted.

The future residential developments will accommodate the proposed interchange improvements; therefore, no impact to residential units is anticipated.

See Section V for excess land discussion.

IV. ***Dedications***

Are there any properties rights which have been acquired, or anticipate will be acquired, through the "dedication" process for the Project?

No __x__ Yes ____ (Complete the following)

Number of dedicated parcels __0__

Have the dedication parcel(s) been accepted by the municipality involved? _N/A__

V. ***Excess Lands / Relinquishments***

Are there Caltrans property rights which may become excess lands or potential relinquishment areas?

No ____ Yes __x__ (Provide an explanation on additional page.)

There will be some excess land due to the proposed interchange reconfiguration. The project proposes to relinquish the excess land to the City for a detention basin.

VI. ***Relocation Information***

Are relocation displacements anticipated?

No ____ Yes __x__ (Complete the following)

A. Number of Single Family Residential Units ____1____ $24,000
Estimated RAP Payments

B. Number of Multi-Family Residential Units ____0____ $ 0
Estimated RAP Payments

C. Number of Business/Nonprofit ____0____ $ 0
Estimated RAP Payments

D. Number of Farms ____0____ $ 0
Estimated RAP Payments

E. Other (define in the "Remarks" section) Estimated RAP Payments	0	$ 0
Totals	1	$24,000
Totals (with 25% contingency)		$30,000

VII. ***Utility Relocation Information***

Anticipate any utility facilities or utility rights of way to be affected?

No _____ Yes __x__ (Complete the following)

Facility	Owner	Estimated Relocation Expense: State Obligation * (2011 Dollars)	Local Obligation (2011 Dollars)	Utility Owner Obligation (2011 Dollars)
A. Telephone		$0	$60,000	$0
B. Electric		$0	$600,000	$0
C. Fiber Optic		$0	$40,000	$0
Totals		$0*	$700,000	$0
Number of facilities:			3	
With 25% contingency			$875,000	

*This amount reflects the estimated total financial obligation by the State.

Any additional information concerning utility involvement on this project?

It is anticipated that relocation of existing utilities due to the proposed interchange reconfiguration are considered project obligations/local share. Thus, the cost includes such work.

VIII. ***Rail Information***

Are railroad facilities or railroad rights of way affected?

No _____ Yes __X__ (Complete the following)

Describe railroad facilities or railroad rights of way affected.

Owner's Name	Transverse Crossing	Longitudinal Encroachment
A. Union Pacific Railroad		Construction Right-of-entry
B.		

Discuss types of agreements and rights required from the railroads. Are grade crossings that require services contracts, or grade separations requiring construction and maintenance agreements involved?

It is anticipated that right-of-entry will be needed from UPRR for the construction of the retaining wall adjacent to their right-of-way. No permanent easement is anticipated.

IX. ***Clearance Information***

Are there improvements that require clearance?

No _____ Yes _x_ (Complete the following)

A. Number of Structures to be Demolished ___1___
Estimated Cost of Demolition $_20,000_

X. ***Hazardous Materials/Waste***

Are there any site(s) and/or improvements(s) in the Project Limits that are known to contain

hazardous materials? None _x_ Yes _____ (Explain in the "Remarks" section)

Are there any site(s) and/or improvement(s) in the Project Limits that are suspected to contain

hazardous waste? None _____ Yes _x_ (Explain in the "Remarks" section.)

XI. ***Project Scheduling***

	Proposed lead time	Completion date
* Preliminary Engineering, Surveys	24 (months)	01/2015
* R/W Engineering Submittals	6 (months)	12/2014
* R/W Appraisals/Acquisition	10 (months)	10/2015
Proposed Environmental Clearance		10/2014
Proposed R/W Certification		10/2015

XII. ***Proposed Funding***

	Local	State	Federal	Other
Acquisition	$1,933,000	$0	$0	$0
Utilities	$ 875,000	$0	$0	$0
Relocation Assistance Program	$ 30,000	$0	$0	$0
R/W Support	$ 300,000	$0	$0	$0
Cost (Eng. Appraisal, etc.)	$ 120,000	$0	$0	$0

XIII. ***Remarks:***

Section IIIF: Right-of-entry will be needed from UPRR for the construction of the retaining wall adjacent to the railroad right-of-way.

Section IIIG: One partial take (listed as No. 8 in the table above) will be transferred from the County of Monterey to the State through Section 83 Land Acquisition process. The required parcel from the Gonzales Cemetery District (Right of Way No. 2) is located south of Gloria Court. This is a separate parcel from the cemetery. The parcel is currently unused and no relocation of remains is anticipated.

A portion of an adjacent property (Right of Way No. 1) will be acquired in exchange for this parcel. This additional property will extend the footprint of the Gonzales Cemetery to the north.

Section X, Hazardous Materials/Waste: There is a potential for aerially deposited lead (ADL) along the mainline adjacent to US 101 and the ramps. The soil in the unpaved areas that are subject to excavation will be tested for ADL, hydrocarbons and other contaminants during the design phase, prior to construction. It is expected that ADL contaminated soils will be re-used on-site in accordance with Caltrans' DTSC Variance. Additionally, the D'Arrigo Brothers' property is listed as potential UST site.

Project Sponsor Consultant

Prepared by:

Daniel Ho, P.E.
Project Manager
Mark Thomas & Company, Inc.

6/14/2011
Date

Project Sponsor

Reviewed and Approved by:

Carlos Lopez
Director of Public Works
City of Gonzales

6/14/2011
Date

Caltrans
Reviewed and accepted based on information provided to date:

Nancy Johnson
Caltrans District Branch Chief
Local Programs
Division of Right of Way

6/22/11
Date

ATTACHMENT F

Right-of-Way Requirement Map

R/W No.	APN No.	COLOR	PROPERTY TYPE	R/W REQUIRED (ACRES)	ACQUISITION
1	020-201-022		PUBLIC (CITY)	0.8	PARTIAL
2a	020-201-021		COMMERCIAL/INDUSTRIAL	6.2	PARTIAL
2b	020-201-021		COMMERCIAL/INDUSTRIAL	1.4	PARTIAL
2c	020-201-021		COMMERCIAL/INDUSTRIALL	0.5	PARTIAL
3	257-011-001		PUBLIC (CEMETERY)	1.6	FULL
4	223-032-019		FUTURE RESIDENTIAL DEVELOPMENT (FOLETTA SUBDIVISION)	3.0	PARTIAL
5	223-032-020		FUTURE RESIDENTIAL DEVELOPMENT (SUN VALLEY SUBDIVISION)	0.7	PARTIAL
6	257-021-021		COMMERCIAL	4.2	PARTIAL
7	257-021-020		RESIDENTIAL	0.5	FULL
8	257-021-037		COMMERCIAL/INDUSTRIAL	4.5	PARTIAL
9			COUNTY (PUBLIC – TARVENETTI RD)	1.6	PARTIAL
10	020-021-019		COMMERCIAL/INDUSTRIAL	0.1	PARTIAL

NOTES:

1. R/W Nos. 1, 2a, 2b and 2c were originally part of APN 020-201-004 and APN 020-201-019 Both parcels were combined then subdivided in 2002 into 3 parcels.
2. R/W No. 1 is Parcel 3 of the new subdivision and was granted to the City of Gonzales in 2004. It is assumed that no R/W fee is involved for this parcel.
3. R/W Nos. 2a, 2b and 2c are Parcel 2 of the new subdivision and was granted to Pacific Wine Partners in 2002.
4. Part of R/W No. 2a includes the area where the existing culvert is located. This area is landlocked due to the adjacent acquisitions; therefore it becomes part of the ROW take.
5. R/W No. 2b is a ROW take in exchange for the impacted Gonzales Cemetery parcel (APN 257-011-001).
6. R/W No. 2c is a 25' wide Access Easement for the impacted City of Gonzales parcel (APN 020-201-022).
7. R/W No. 3 is part of the Gonzales Cemetery, located south of Gloria Court. It is assumed that no R/W fee is involved for this parcel due to the planned ROW exchange; see Note 5 for R/W No. 2b.

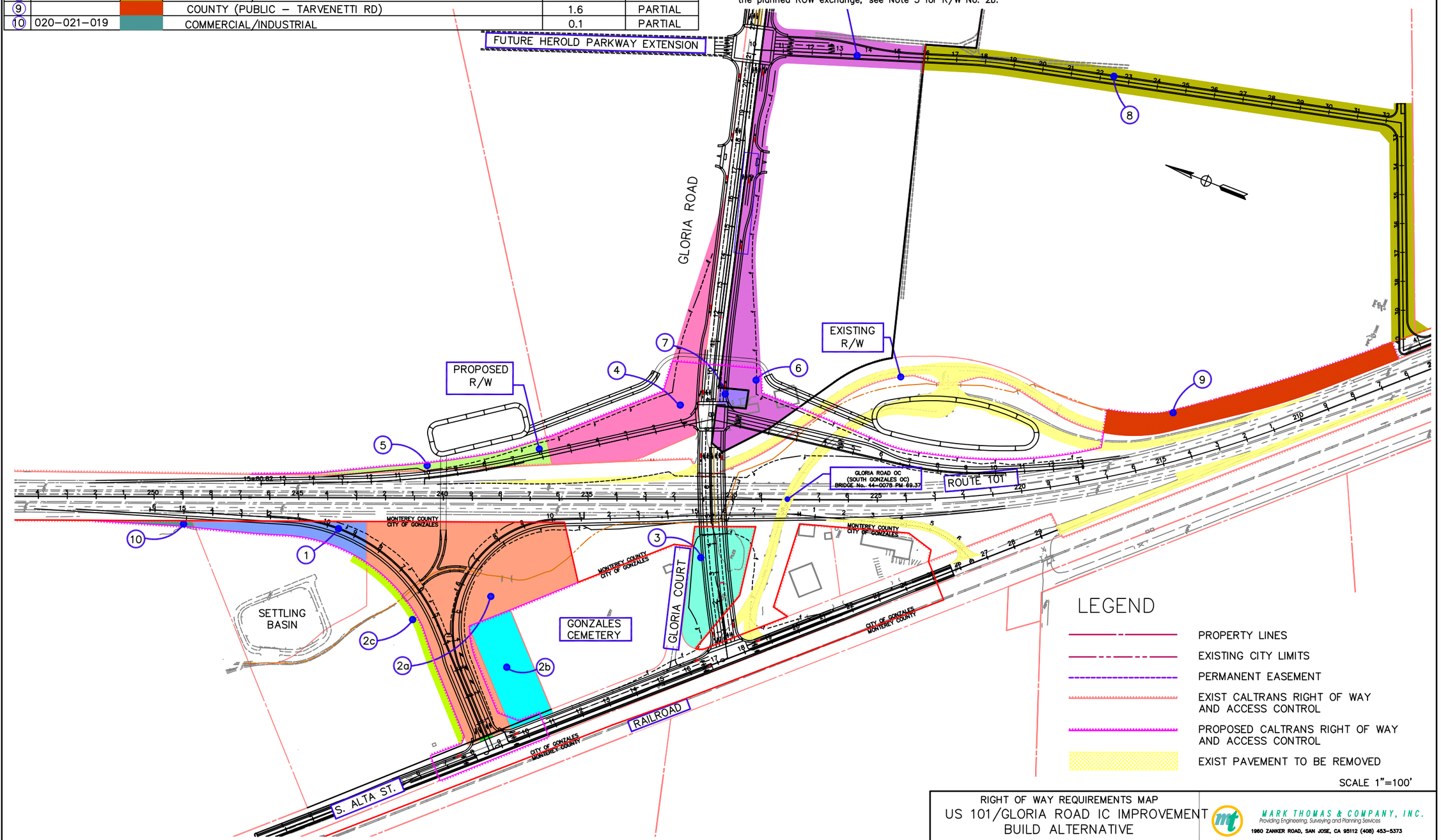

RIGHT OF WAY REQUIREMENTS MAP
US 101/GLORIA ROAD IC IMPROVEMENT
BUILD ALTERNATIVE
05-MON-101 – PM 68.4/70.4; EA 05-0P930K

MARK THOMAS & COMPANY, INC.
Providing Engineering, Surveying and Planning Services
1960 ZANKER ROAD, SAN JOSE, CA 95112 (408) 453-5373

ATTACHMENT G

Advance Planning Study

DIST	COUNTY	ROUTE	KILOMETER POST TOTAL PROJECT
05	MON	101	68.4/70.4

CITY OF GONZALES
147 FOURTH STREET
GONZALES, CA 93926

MARK THOMAS & COMPANY, INC
1960 ZANKER ROAD
SAN JOSE, CA 95112

PREPARED FOR THE STATE OF CALIFORNIA – DEPARTMENT OF TRANSPORTATION

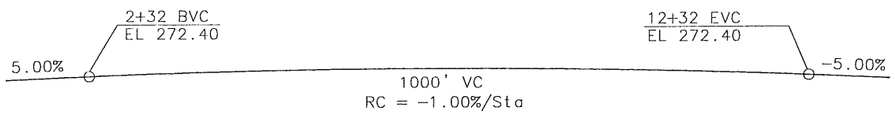

PROFILE
No Scale

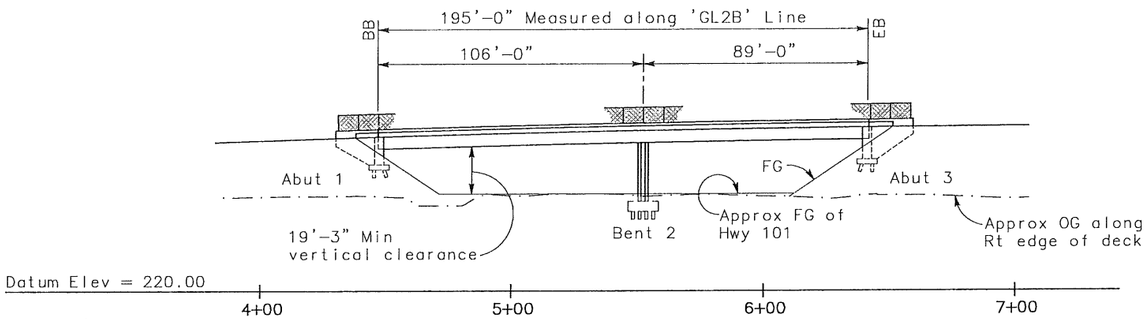

ELEVATION
1" = 30'

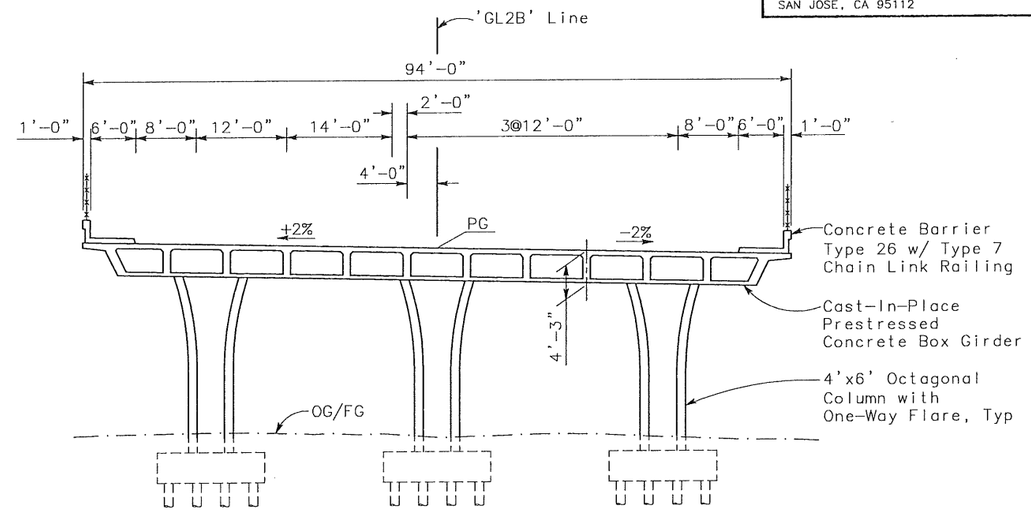

TYPICAL SECTION
1" = 10'

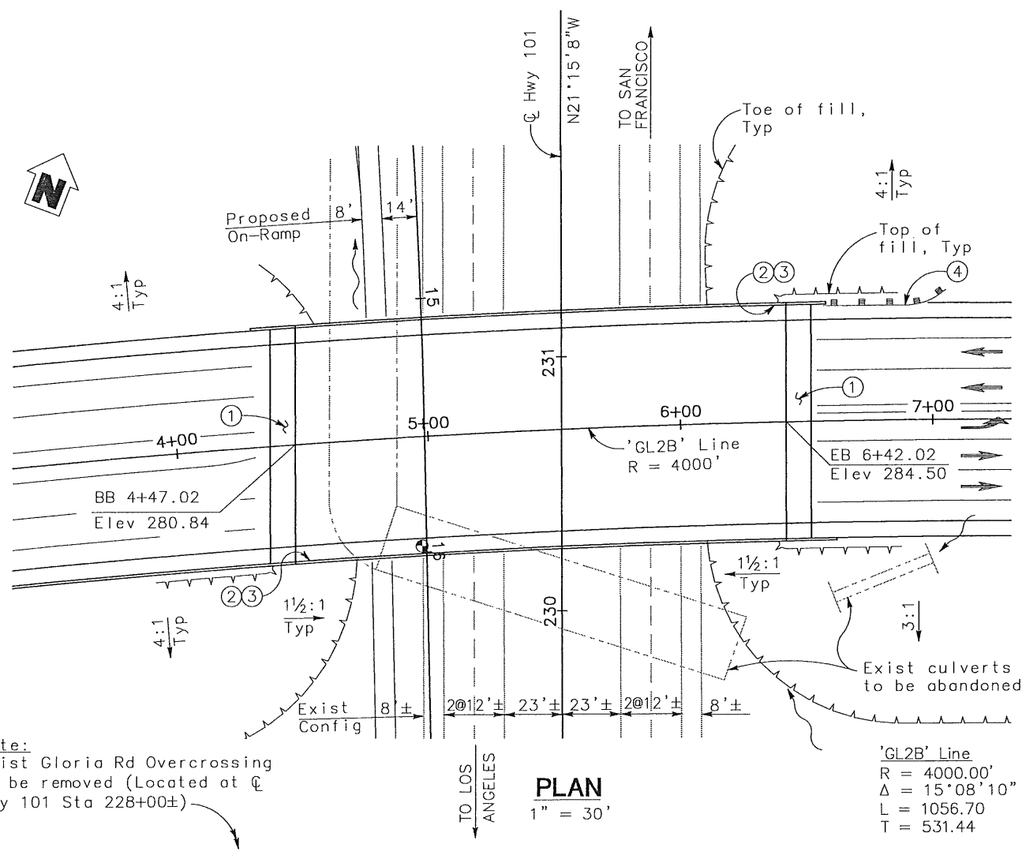

Note:
Exist Gloria Rd Overcrossing to be removed (Located at ℄ Hwy 101 Sta 228+00±)

PLAN
1" = 30'

LEGEND

1. Approach Slab Type EQ(10)
2. Paint "Gloria Rd Overcrossing"
3. Paint "Br. No. __-____" and Year completed
4. MBGR, see 'Road Plans'

——— Indicates New Construction
—-—-— Indicates Exist Structure
— — — Indicates Future Construction
Indicates Point of Minimum Vertical Clearance

PLANNING ESTIMATE

Date of Estimate	10/19/10
Structure Depth	=4.25 FT
Length	=195 FT
Width	=94 FT
Area	=18,330 SQ FT
Cost/sq ft including 10% Mobilization & 25% Contingency	$250/SQ FT
Subtotal	=$4,585,000
Exist Bridge Removal	=$150,000
Total Cost	=$4,735,000

VEHICULAR TRAFFIC

1.___ New alignment. No traffic at the site.
2.___ Traffic will be detoured away from the site.
3.___ Traffic will be carried on the structure. Stage construction will not be required.
4.✓ Traffic will pass under the structure on HWY 101 (Name of St. or Hwy.)

A.___ No falsework allowed over traffic
B.___ Falsework opening(s) required:

	Temporary Vertical Clearance	Width of Traffic Opening	Width of Falsework Opening
N Bnd.	15'-0"	37'-0"	
S Bnd.	15'-0"	37'-0"	
___ Two-way			

C.___ Temporary traffic lane reduction needed for footing excavation.

BUILD ALTERNATIVE

DESIGNED BY T. WALKER	DATE 10/19/10	PO CHEN PROJECT ENGINEER	PLANNING STUDY
DRAWN BY T. WALKER	DATE 10/19/10		US 101 GLORIA ROAD OC
CHECKED BY	DATE		BRIDGE NO. / CU
APPROVED	DATE		SCALE: / EA

FILE => $REQUEST

USERNAME => $USER DATE PLOTTED => $DATE TIME PLOTTED => $TIME

ADVANCE PLANNING STUDY SHEET (METRIC) (REV. 3/1/08)

DIST	COUNTY	ROUTE	KILOMETER POST TOTAL PROJECT
05	MON	101	68.4/70.4

CITY OF GONZALES
147 FOURTH STREET
GONZALES, CA 93926

MARK THOMAS & COMPANY, INC
1960 ZANKER ROAD
SAN JOSE, CA 95112

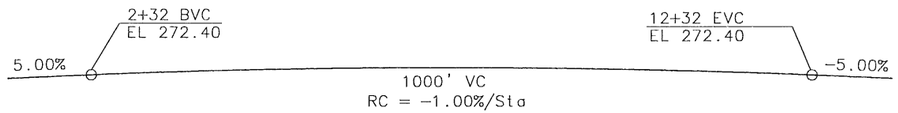

PROFILE
No Scale

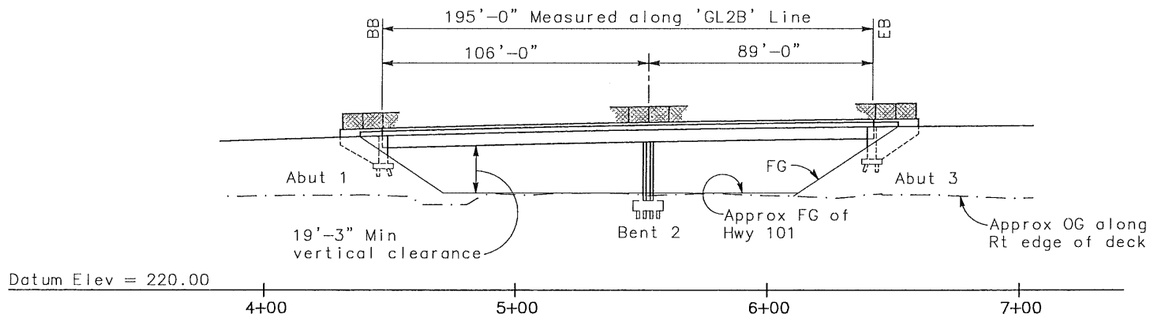

ELEVATION
1" = 30'

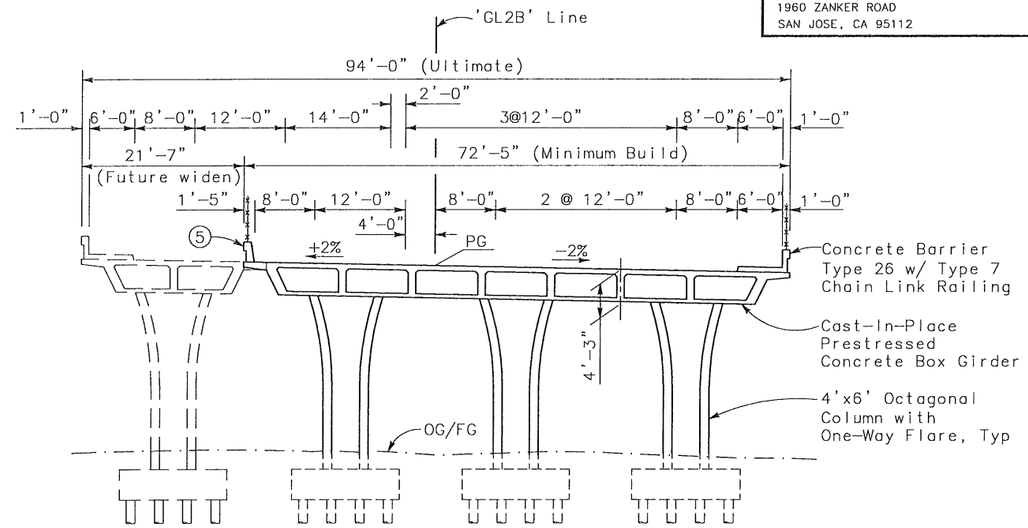

TYPICAL SECTION
1" = 10'

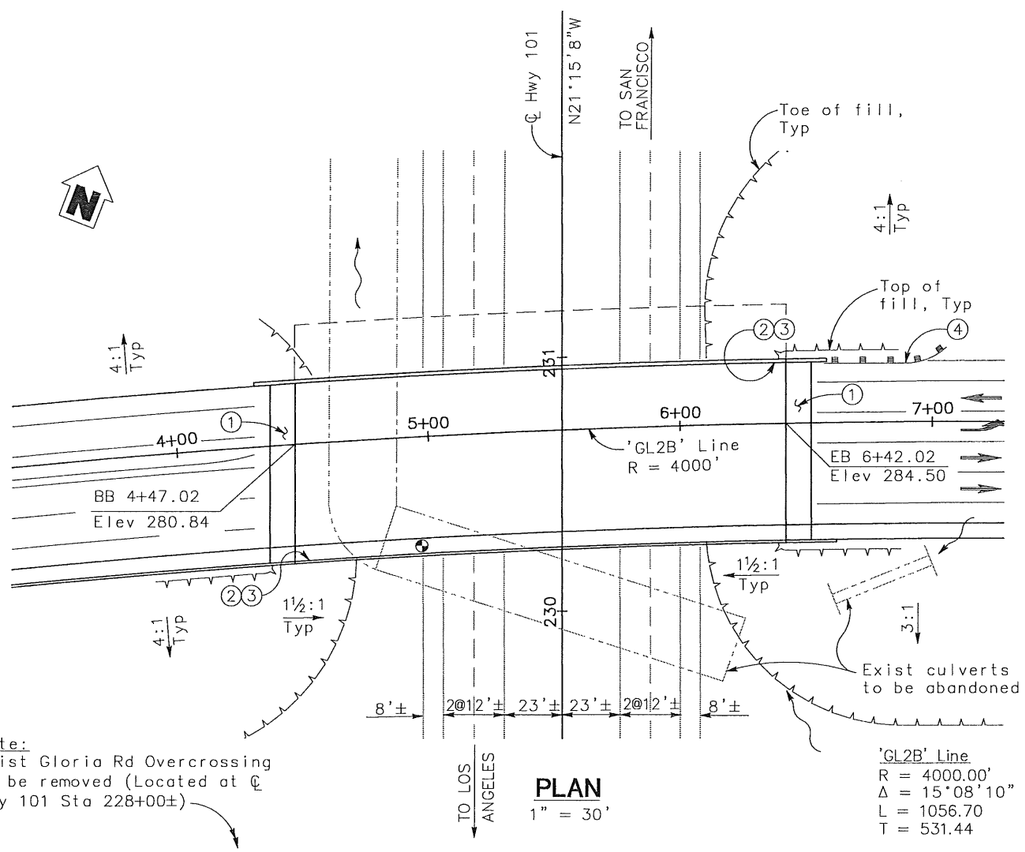

Note:
Exist Gloria Rd Overcrossing
to be removed (Located at ℄
Hwy 101 Sta 228+00±)

PLAN
1" = 30'

'GL2B' Line
R = 4000.00'
Δ = 15°08'10"
L = 1056.70
T = 531.44

LEGEND

1. Approach Slab Type EQ(10)
2. Paint "Gloria Rd Overcrossing"
3. Paint "Br. No. __-____" and Year completed
4. MBGR, see 'Road Plans'
5. Concrete Barrier Type 732 with Type 7 Chain Link Railing

——— Indicates New Construction
- - - - Indicates Exist Structure
— — — Indicates Future Construction
Indicates Point of Minimum Vertical Clearance

PLANNING ESTIMATE

Date of Estimate	10/19/10
Structure Depth	=4.25 FT
Length	=195 FT
Width	=72.42 FT
Area	=14,122 SQ FT
Cost/sq ft including 10% Mobilization & 25% Contingency	$250/SQ FT
Subtotal	=$3,530,500
Exist Bridge Removal	=$150,000
Total Cost	=$3,680,500

VEHICULAR TRAFFIC

1. ___ New alignment. No traffic at the site.
2. ___ Traffic will be detoured away from the site.
3. ___ Traffic will be carried on the structure. Stage construction will not be required.
4. ✓ Traffic will pass under the structure on HWY 101 (Name of St. or Hwy.)
   - A. ___ No falsework allowed over traffic
   - B. ___ Falsework opening(s) required:

	Temporary Vertical Clearance	Width of Traffic Opening	Width of Falsework Opening
N Bnd.	15'-0"	37'-0"	
S Bnd.	15'-0"	37'-0"	
Two-way			

   - C. ___ Temporary traffic lane reduction needed for footing excavation.

MINIMUM BUILD ALTERNATIVE

DESIGNED BY T. WALKER	DATE 10/19/10	PO CHEN PROJECT ENGINEER	PLANNING STUDY
DRAWN BY T. WALKER	DATE 10/19/10		US 101 GLORIA ROAD OC
CHECKED BY	DATE		BRIDGE NO. / CU
APPROVED	DATE		SCALE: / EA

PREPARED FOR THE STATE OF CALIFORNIA - DEPARTMENT OF TRANSPORTATION

USERNAME => $USER DATE PLOTTED => $DATE TIME PLOTTED => $TIME

ADVANCE PLANNING STUDY SHEET (METRIC) (REV. 7/1/09)

FILE => $REQUEST

ATTACHMENT H

Preliminary Environmental Analysis Report

PRELIMINARY ENVIRONMENTAL ANALYSIS REPORT

1. Project Information

District	County	Route	PM	EA
5	Monterey	US 101	68.4/70.4	05-0P930K
Project Title: US 101 / Gloria Road Interchange Improvement				
Project Manager Carlos Lopez – City of Gonzales			Phone # 831-675-4205	
Project Engineer Daniel Ho – Mark Thomas & Company			Phone # 408-453-5373	
Environmental Office Chief/Manager Matt Fowler – Caltrans District 5			Phone # 805-481-3495	
PEAR Preparer Daniel Ho – Mark Thomas & Company			Phone # 408-453-5373	

2. Project Description

Purpose and Need

The City of Gonzales is anticipating that the traffic demand on Gloria Road will increase in the future as the areas north and south of US 101 continue to develop. Due to its antiquated configuration, any further development will impact traffic operations on US 101 and Gloria Road.

The City recently completed the Gonzales Industrial Park project and is in discussions with the Salinas Valley Solid Waste Authority (SVSWA) regarding changes in truck routing from and to the Johnson Canyon Landfill site in Gonzales due to closure of the Crazy Horse Canyon Landfill site in Salinas. Both of these imminent projects will add more truck traffic to the interchange.

Given this, the City is anticipating that the existing interchange configuration will not be able to support the additional truck traffic and other demands in the next 20 years.

Specifically, the project purpose is to:

- Relieve the anticipated future traffic congestion at the interchange to accommodate traffic demand associated with planned build-out of the 1996 Gonzales General Plan areas.
- Improve local traffic circulation and connection between areas west and east of US 101 in the southeastern part of the City.
- Improve freeway operations and access to and from the existing and planned land uses that are located near the interchange.

Description of work
The project proposes to reconstruct the existing US 101 Gloria Road interchange in the southern limit of the City of Gonzales. Three alternatives: build, minimum build, and no-build were studied in the Project Study Report (PSR).

Alternatives
Based on a 2035-year traffic projection, the following alternatives have been identified:

- Build Alternative: The build alternative proposes reconstructing the interchange completely. Gloria Road would be extended following its original alignment east of US 101 across the freeway to S. Alta Street. A new 4-lane overcrossing would be constructed over the freeway. The new interchange configuration would be a combination of tight diamond on the northbound quadrants and button-hook on the southbound direction. All ramps would be single-lane and all on-ramps would have ramp metering. The northbound off-ramp would be widened at the terminus to provide one left turn lane, one shared through and right turn lane and one right turn lane. The southbound off-ramp would also be widened to one left turn lane and one right turn lane at the termini. The southbound entrance ramp would be dual lanes at the intersection tapering down to one lane before entering the freeway. Both ramp termini intersections are anticipated to be signalized. No HOV bypass lanes would be provided because this stretch of US 101 has no plans for HOV lanes.

  The southbound on- and off-ramps would be raised above the 100-year flood plain as the northwest portion of the project area is located within a Flood Zone A designation. The northbound on- and off-ramps would be raised to conform to the new Gloria Road intersection. Where portions of the proposed improvements need to be elevated, 4:1 or flatter slopes would be constructed on either side of the roadway.

  The new Gloria Road would be a 5-lane facility with curbs, gutters, median, shoulders and sidewalks on both sides. A portion of the median would be landscaped. The eastern limit of work would be just east of the future Herold Parkway Extension. Improvements beyond this point would be completed by others as part of the future Gloria Road Improvement Project. The profile of the facility would be raised to accommodate standard vertical clearance requirements, as well as, the falsework vertical clearances during construction. Retaining walls are required on the north side of Gloria Road on either side of the interchange to maximize the development of the adjacent parcel and minimize the impact to the Gonzales Cemetery. The height of the retaining wall would range from four (4) feet to 18 feet. Due to the constraint of the railroad tracks, Alta Street would be elevated to match the new profile grade at Gloria Road. Retaining wall would be required along the railroad right-of-way. The height of the retaining wall would range from four (4) feet to ten (10) feet. It is expected that these walls would be Caltrans Type 1 walls.

  Tavernetti Road would be realigned approximately 1900 feet east to intersect with the future Herold Parkway Extension. The realigned Tavernetti Road would be a 2-lane facility with 12-foot-wide lanes, curbs, gutters, 4-foot-wide shoulders and 6-foot-wide sidewalks on both sides.

  S. Alta Street would be improved from the existing SB Gloria Road off-ramp to north of the new southbound US101/Gloria Road ramps for approximately 2600 feet. The

improvement would include 12-foot-wide lanes, curbs, gutters, median and 5-foot-wide shoulders on both sides. The east side of the road would include a 6-foot-wide sidewalk.

The project would require two (2) full and eight (8) partial right-of-way takes, totaling approximately 25 acres. Overhead electric and telephone lines and underground fiber-optic lines exist along Gloria Road and Alta Street. These utilities will be relocated.

- Minimum Build Alternative: The "Minimum Build" alternative would construct portion of the build alternative. The minimum build alternative would satisfy the 2035 traffic projection. Specifically, the minimum build alternative would construct all of the improvement for build alternative except the following:

    1. US101 Gloria Road Overcrossing would be 4 lanes (3 through and 1 left turn lanes) with 5-foot-wide bike lanes on both sides. Sidewalk would be provided on the south side only.
    2. Southbound on- and off-ramp would remain in their existing configuration,
    3. Sidewalk would be provided on the north side only on Gloria Road.

    The minimum build alternative would require approximately 17.5 acres of right-of-way comprised of two (2) full and six (6) partial takes.

- No Build Alternative: The "No Build" alternative assumes no improvements to the existing interchange.

3. Anticipated Environmental Approval

CEQA		**NEPA**	
Environmental Determination			
Statutory Exemption	☐		
Categorical Exemption	☐	Categorical Exclusion	☐
Environmental Document			
Initial Study or Focused Initial Study with Negative Declaration or Mitigated ND	☒	Environmental Assessment with Finding of No Significant Impact	☒
Environmental Impact Report	☐	Environmental Impact Statement	☐
CEQA Lead Agency (if determined):		Caltrans	
Estimated length of time (months) to obtain environmental approval:		26 months	
Estimated person hours to complete identified tasks:			

4. Special Environmental Considerations

No special considerations or processes have been identified, at this time, which may affect project delivery and require unusual, exceptional, or extended environmental processes.

5. Anticipated Environmental Commitments

The following environmental commitments are anticipated to comply with CEQA and NEPA:

- Prepare a Natural Environment Study Report, a Biological Assessment, and a wetland delineation to assess the jurisdictional status of the drainage ditch to determine if seasonal wetlands occur anywhere within or near the project area.
- Preliminary site assessments and consultation with USFWS and CDFG regarding listed threatened or endangered species, including, but not limited to, California red-legged frog, California tiger salamander, San Joaquin kit fox, burrowing owl, southwestern pond turtle, and American badger. Coordinate with these agencies if protocol-level surveys are required as well as appropriate preconstruction surveys.
- Coordinate with interested parties (local historical society, Native American Heritage Commission, local Native American representatives) and the State Historic Preservation Office (SHPO).
- Delineate Area of Potential Effect (APE).
- Conduct an archeological survey of all areas not previously examined, and prepare an Archaeological Survey Report.
- Conduct an historical study of identified properties and prepare a Historic Resources Evaluation Report.
- Prepare a Historic Property Survey Report.
- Prepare Finding of Effect
- Prepare an Air Quality Report to address potential cumulative impacts and GHG.
- Prepare a Noise Study Report to address potential impacts to existing and future residential uses adjacent to the proposed interchange.
- Prepare a Relocation Impact Study in accordance with the Uniform Relocation Assistance and Real Property Acquisition Policies Act of 1970.

(See Attachment C for Environmental Commitments Cost Estimate)

6. Permits and Approvals

Required permits for Build Alternative may include but are not limited to the following:

- Coordination with California Department of Fish and Game (CDFG) and US Fish and Wildlife Service (USFWS) for Section 7 of the Endangered Species Act may be required if the Draft NES report indicates the presence of state-listed and federally threatened or endangered species within the project area. California red-legged frog, California tiger salamander, San Joaquin kit fox, burrowing owl, southwestern pond turtle, and American badger may be present in the project area. Estimated timing for acquiring the permit would be approximately 3 - 6 months.
- Coordination with US Army Corps of Engineers (ACOE) to determine jurisdictional status of the drainage ditch located along US 101 on both sides of the proposed interchange. A Waste Discharge Requirement permit under the Porter-Cologne Water Quality Control Act, and potentially a Section 401 Clean Water Act permit may be required if any Waters of the US are found to be present and impacted by the project. Estimated timing for acquiring the permit would be approximately 3 - 6 months.
- Federal Highway Administration (FHWA) – Relocation Impact Study, AD 1006 form, floodplain evaluation report/checklist.

- National Resources Conservation Service – AD 1006 form.

(See Attachment C for Environmental Commitments Cost Estimate)

7. Level of Effort: Risks and Assumptions

Several of the recommended biological studies will need to be conducted during specific periods of the year (primarily spring); this could delay the environmental clearance and project approval milestones. In addition, coordination and/or consultation with CDFG, USFWS and ACOE may be delayed due to staffing shortages or other project priorities within each respective agency and may lengthen the consultation or permitting timeframe. Studies associated with the remaining issue areas could be completed within 60 days of authorization. Estimated timing for preparation and approval of the CEQA Initial Study/Mitigated Negative Declaration and any necessary NEPA documentation would be approximately 26 months.

8. PEAR Technical Summaries

8.1 **Land Use:** The land east of the realigned interchange is developed with agricultural land uses (northeast quadrant) and a residential property (southeast quadrant). The land immediately west of the realigned interchange is developed as the Gonzales Cemetery (northwest quadrant) and two businesses (southwest quadrant).

The proposed project is consistent with the City of Gonzales General Plan adopted in July 1996 (currently being revised). The project is also identified in the 2005 Regional Transportation Plan (RTP) prepared by the Transportation Agency for Monterey County (TAMC).

Section 4(f) of the Department of Transportation Act specifies that publicly owned land from a park, recreation area, wildlife or waterfowl refuge, or land from a historic site may be used for a Federal Aid highway only if: (1) there is no feasible and prudent alternative to the use of such land, and (2) the proposal includes all possible planning to minimize harm to the Section 4(f) land resulting from such use. No Section 4(f) properties have been identified that would be affected by the proposed project.

8.2 **Growth:** The purposes of the proposed interchange improvement are to improve local traffic circulation between the east and west sides of US 101 within the southern portion of the City and to relieve anticipated future traffic congestion at the interchange to accommodate traffic demand associated with planned build-out of the City's General Plan. Therefore, the proposed project is more accurately described as "accommodating" growth. The proposed project would not directly result in new residential development. As a result, population growth is not expected and secondary or indirect impacts associated with population growth, such as inadequate school capacities and overuse of public facilities and utilities are not anticipated.

8.3 **Farmlands/Timberlands:** There are no designated timberlands within the project site vicinity. The land east of US 101 is currently transitioning from agricultural use to urban development (Sun Valley Residential Development). The amount of farmland required for the project is very small (right-of-way acquisitions and/or easements). A farmland study (i.e., National Resources Conservation Service – AD 1006 Form) may be required during the PA/ED phase. Conversion of farmland for the development projects (Rincon Villages and Folleta developments) east of the interchange is expected to occur in phases in 2 to 5

years timeframe depending on the housing market. Cumulative impacts will have to be studies, due to other projects in the area.

8.4 **Community Impacts:** The surrounding community within the project area consists of a mix of agricultural, residential and commercial land uses. The project area does not contain higher than average concentrations of low-income or minority individuals. As such, implementation of the proposed project would not have an environmental justice impact. The build alternative would require relocation of the residence in the northeast quadrant of the existing interchange (or southeast quadrant of the realigned interchange). Relocation impacts shall be documented in the environmental document and a Relocation Impact Study would be required.

The new interchange would continue to connect the surrounding community and commercial businesses to the City and would not act as a barrier within the community. The proposed project would create a new intersection with highway ramps to improve traffic operations and address existing non-standard design features. As such, the project would not reduce or remove community character or cohesion, but would facilitate a more efficient and safer connection between members of the community.

The Gonzales Police and Fire Departments provide law enforcement and fire/emergency services, respectively, for the City. Their main stations are both located 1.5 miles northwest of the project area. The nearest hospital, Salinas Valley Memorial is located in Salinas approximately 20 miles northwest of the project area. The nearest school, La Gloria Elementary School, is located 1.5 miles northwest of the project area. The proposed interchange would have no adverse impacts to these public and community services. Access and response times to existing land uses and future suburban areas by fire and police services shall be greatly enhanced by the proposed interchange. Overhead electric and telephone lines as well as underground fiber-optic exist along Gloria Road and Alta Street. These utilities shall be relocated to accommodate the new interchange and roadway improvements.

8.5 **Visual/Aesthetics:** The project area within and along US 101 is not within a State-designated scenic highway.[1] Therefore the project would not obstruct views of State importance. In addition, the City of Gonzales General Plan does not designate any scenic resources within the City.[2] Views from travelers on US 101 could be affected by the reconstructed interchange. As motorists approach the interchange, they would experience an increase in dominance of the roadway due to the higher bridge structure and related appurtenances of the on- and off-ramps. However, this increase in scale and prominence would be experienced for roughly 10 seconds at travel speeds of 55 miles per hour, a relatively brief duration of visually dominant impact. In general, the character of the reconstructed interchange would not substantially change the existing visual quality along this portion of US 101. Cumulative impacts will have to be studies, due to other projects in the area.

The design of the interchange will be in accordance with Caltrans design guidelines to address visual impacts. Contour grading and slope rounding techniques will be used in the slope design. Slope steeper than 4:1 will require approval from the District Traffic

---

[1] California Department of Transportation, California State Scenic Highway Mapping System, Monterey County, http://www.dot.ca.gov/hq/LandArch/scenic_highways/index.htm, Accessed on May 19, 2009.

[2] City of Gonzales General Plan, 1996.

Engineer. Aesthetic treatment will be applied to retaining walls, concrete barriers, soundwalls in compliance with the Aesthetic Barrier Design Guidance and the California Highway Barrier Aesthetics Report. Construction of the new interchange would result in similar views to what currently exists and would not compromise the overall existing aesthetic nature of the corridor. During the construction and operational phases of the new interchange, nighttime light and glare issues will be mitigated so as to not affect any nearby sensitive uses. These mitigations include construction lighting to be shielded and faced downwards at lot lines so as to not be directly visible from any adjacent sensitive uses and by incorporating street light fixtures with directional shielding so as not to shine directly on residential and commercial areas adjacent to the project site.

8.6 **Cultural Resources:** According to the cultural resources record search for archaeological and historic sites, six studies have been conducted within a one-quarter-mile-radius of the proposed project. One historic-period resource (a farmstead [P-27-2578]) was previously identified within the interchange area. No prehistoric resources were identified; however, there is a moderate potential for encountering buried prehistoric resources since the interchange is located less than two miles from Salinas River. In compliance with the historic preservation laws, including the National Historic Preservation Act of 1966, as amended, its implementing regulations found in Title 36 CFR 800, and Section 15064 of the California Environmental Quality Act, a cultural resource analysis shall be conducted within an Area of Potential Effects (APE). A Historic Resource Evaluation Report (HRER) shall be prepared for built environment resources in the project vicinity. An Archaeological Survey Report (ASR) shall be prepared to evaluate the intersection area for prehistoric and historic archaeological properties. A Historic Property Survey Report (HPSR), summarizing the results of the ASR and HRER, and a Finding of Effect (FOE) are also required.

8.7 **Hydrology and Floodplain:** The project area is located within the Salinas Valley Groundwater Basin. The 180-foot and 400-foot aquifers represent groundwater bearing aquifers within the project vicinity. However, there are other unconfined aquifers located within the project area where depth to groundwater ranges from 50 to 150 feet below ground surface (bgs). According to the Federal Emergency Management Agency (FEMA) Flood Insurance Rate Map (FIRM) for Monterey County #0601950250D, the northwest portion of the project site is located within a Flood Zone A designation. Bypass culverts would be provided in fills within the area to allow for 100-year flow. Coordination with FHWA regarding floodplain evaluation is necessary. A floodplain evaluation shall be addressed in the environmental document prepared for the proposed project.

Water Quality and Storm Water Runoff: The design and construction of the proposed project will adhere to the requirements set forth in the Caltrans National Pollutant Discharge Elimination System (NPDES) permit, the Caltrans Storm Water Management Plan (SWMP), the Caltrans Project Planning and Design Guide, the Construction Site Best Management Practices (BMPs) Manual and the Caltrans Standard Specifications.

The City of Gonzales has established goals to reduce the quantity of stormwater runoff and improve quality of runoff. The project will be consistent with these goals by implementing permanent stormwater treatment and design pollution prevention BMPs. Design pollution prevention BMP including drainage inlets with closed conduit, dikes, curbs and gutters, and ditches as well as hydoseeding will be implemented to minimize runoff and erosion while permanent stormwater BMP such as biofiltration swales and detention basins will be implemented to improve quality of runoff. Additionally, exiting vegetation will be

preserved where feasible. All stormwater runoff from the impervious surfaces will be conveyed to the retention basins either through piping and biofiltration swales before releasing to Gonzales Slough. The estimated water quality flow and volume to be treated by the project are 9 cfs and 131,600 cubic feet. Gonzales Slough is not listed on the California 303(d) list under the Federal Clean Water Act as being impaired.

Water quality measures will be discussed in more details in the Water Quality Report in the PA/ED phase.

Potential impacts on water quality during construction will be addressed in the design and construction phases. Potential impacts include erosion, accidental spills of hazardous materials and disruption of natural drainage patterns. During construction, the contractor will be responsible to take necessary measures to eliminate potential impacts (as stated in Caltrans Standard Specifications 7-1.01G).

Because the proposed project would disturb more than an acre of land, the following measures are recommended:

1. A Notification of Construction (NOC) would be submitted to the appropriate Regional Water Quality Control Board (RWQCB) at least 30 days prior to the start of construction. The tentative start date, tentative duration, location of construction, description of project, estimated number of affected acres, resident engineer in charge of the project, and telephone number of the resident engineer would be reported.

2. A Storm Water Pollution Prevention Plan (SWPPP) should be prepared and implemented during construction to the satisfaction of the resident engineer.

3. A Notice of Construction Completion would be submitted to the RWQCB upon completion of construction and stabilization of the site. A project would be considered complete when the criteria for final stabilization in the Construction General Permit are met.

A Storm Water Data Report has been prepared for the project.

8.8 **Geology, Soils, Seismic and Topography:** The project area is located at approximately 144 feet above mean sea level (msl). Based on the general topography, the site generally consists of relatively flat terrain, which slopes at less than a 5 percent gradient to the southwest. The project area is underlain by Quaternary (recent) alluvial fan deposits from the Gabilan Mountain Range (East) and the Santa Lucia Mountain Range (West). Within the project area, soil depths range from the surface to approximately 6 feet. The soil is classified as fine sandy loam intermixed with silt and clay and some coarse sand. The project area is located in a seismically active part of the Central Coast of California where many faults exist. Faults in the vicinity of the project with a moderate to high potential for surface rupture include the Reliz Fault (approximately 3 miles to the west) and the San Andreas Fault Zone (approximately 12 miles to the east).

The type soils in the project area and vicinity are such that they are subject to strong groundshaking, low liquefaction potential, and low landslide potential. No major faults cross the project area; therefore, the potential for exposure and damage from surface fault rupture is low. However, because of the proximity of faults, the project area would be subject to groundshaking. The project shall be designed in accordance with California

Building Code requirements and Caltrans' design guidelines to ensure the roadway and structures include adequate seismic resistance to withstand ground shaking. During the design phase, a site specific geotechnical investigation shall be performed. Soil data collection together with site specific borings and penetrometer data shall be conducted to determine foundation requirements. Soil laboratory test data shall be conducted to determine site specific geotechnical design parameters. The environmental document shall present all applicable regulatory requirements regarding geology, soils and seismicity as well as requiring that a site-specific geotechnical investigation be conducted prior to construction activities.

8.9 **Paleontology:** The project area is underlain by Quaternary (recent) alluvial fan deposits from the Gabilan Mountain Range (east) and the Santa Lucia Mountain Range (west). Within the project area, soil depths range from the surface to approximately 6 feet. The soil is classified as fine sandy loam intermixed with silt and clay and some coarse sand. The potential to encounter fossils within the project area is considered low due to the type of soil deposition and that project construction activities would be limited to areas that have been previously disturbed during previous land development. In the event that fossils are encountered, standard construction mitigation measures would be implemented to allow for the recovery of any uncovered fossil remains and associated specimen data that would otherwise be lost to earthmoving and to any unauthorized fossil collecting.

8.10 **Hazardous Waste/Materials:** An Initial Site Assessment (ISA) was prepared to address the potential for hazardous waste. Based on the results, the risk ranking for the proposed project is low. There are two sites within the vicinity of the project area identified in the ISA as having environmental issues or historic environmental surveys. In addition, current and past uses in the project area have been agricultural and light industrial with potential impacts related to pesticide use, heating oil underground storage tanks (USTs), and other buried utilities (e.g., natural gas/petroleum pipelines and groundwater wells). An aerially deposited lead survey would be required due to work being performed along US 101. Since right-of-way take would relocate and demolish the existing residential structure and other ancillary structures located in the southeast quadrant of the realigned US 101/Gloria Road Interchange, hazardous building materials such as asbestos, lead-based paint, and polychlorinated biphenyls (PCBs) would have to be assessed and abated, if necessary. Coordination with the Regional Water Quality Control Board regarding the existing drainage ditch is also necessary.

8.11 **Air Quality:** The proposed project is consistent with the City of Gonzales General Plan adopted in July 1996 (currently being revised). The project is also identified in the 2005 RTP prepared by TAMC. A separate air quality technical study shall be required to assess existing, future and cumulative effects to the Gloria Road Interchange as well as nearby roadways and intersections. The environmental document should address construction-related emissions and conformity to applicable State and federal implementation plans. Because federal funding may be used for the project, a review of the project's conformance with the State Implementation Plan (SIP) would need to be conducted. The SIP requires the project to be approved and included in the RTP and programmed in the State and Federal Transportation Improvement Plans.

8.12 **Noise and Vibration:** Existing ambient noise in the project area is predominantly due to motor vehicle traffic. Noise sensitive uses in the vicinity of the project site include residential uses adjacent to Gloria Road east of US 101. A noise analysis will be required

and would include potential project effects on existing and future residential development east of US 101 parallel to the freeway.

8.13 **Energy and Climate Change:** There are no anticipated energy related impacts due to the implementation of the proposed project. The project would not create a significant demand for electricity or natural gas during its operation. At this time, there are no federal, State, or regional regulatory procedures or protocols for determining whether an individual project makes a considerable cumulative impact on greenhouse gas (GHG) emissions and therefore on global climate change. In the absence of a protocol, a qualitative analysis, using the Air Resources Board's EMFAC model may be used to compare relative carbon dioxide (CO_2) emissions for the build and the no-build alternatives since the proposed project is a congestion relief project.

8.15 **Biological Environment:** A reconnaissance-level field survey of the project area was conducted on April 23, 2008. Literature surveys included a records search of the California Natural Diversity Data Base for the Chualar, Gonzales, Mt. Harlan, Mt. Johnson, Natividad, Palo Paicines, Escritio Peak, Rana Creek, and Soledad 7.5' USGS quadrangles, reviews of pertinent literature (Jennings and Hayes 1994, Shuford and Gardali 2008, Williams 1984, Zeiner et al. 1990), and a species list from the U.S. Fish and Wildlife Service (USFWS).

The project will require preparation of a Natural Environment Study Report, a Biological Assessment, and a wetland delineation to assess the jurisdictional status of the drainage ditch in the project area and to determine if seasonal wetlands occur anywhere within or near the project impact area (see wetland discussion below).

The proposed project has low potential to directly or indirectly impact species listed as threatened or endangered by the USFWS and/or California Department of Fish and Game (CDFG) including California red-legged frog, California tiger salamander, and San Joaquin kit fox. Other special status but unlisted species that might be affected by the proposed project include burrowing owl, southwestern pond turtle, and American badger. Potential impacts to these species will require consultation with USFWS and CDFG. Based on their known habitat requirements and local distribution, no special status plants have the potential to occur in the project area.

The CNNDB (2008) records search indicate that several state- or federally-listed species have been observed within 8 miles of the project area including California red-legged frog, California tiger salamander, and San Joaquin kit fox. Other unlisted, special status species that have been recorded near the project area include southwestern pond turtle, burrowing owl, and American badger. The presence of numerous California ground squirrel burrows observed in the project area offers suitable habitat for the burrowing owl, but the plowed fields surrounding this area make it only marginally suitable for American badger. The swift flowing water in the channel and lack of instream vegetation or basking sites offer little suitable habitat for the southwestern pond turtle, California red-legged frog, or California tiger salamander and the likelihood of their occurrence is low. San Joaquin kit fox have been observed within 8 miles of the project area, and dispersing individuals could pass through this area on occasion, although the project area is outside the known, historical range of this species. None of the special status plants with local and regional occurrence are likely to occur in the project area because suitable habitat is absent.

Preliminary site assessments and coordination with USFWS and CDFG will be needed to determine if protocol-level surveys for California red-legged frog and California tiger salamander, and San Joaquin kit fox will be warranted. Preconstruction surveys also will be required for southwestern pond turtle, burrowing owl, San Joaquin kit fox, and raptors and migratory birds that may nest at or near the project site. In addition, a special status plant survey will be conducted in PA/Ed phase.

Executive Order 13112 requires that any Federal action may not cause or promote the spread or introduction of invasive species. An invasive species analysis should be included in the Natural Environment Study Report.

An agricultural ditch originated at the southeast quadrant of the interchange and flows northwesterly and bisects the project area. It flows through a large culvert under the US 101 roadway. This earthen channel ranges in width from 6 to 10 feet from bank to bank, and it has relatively steep, 3-foot-high side slopes. This ditch is lined mostly by ruderal vegetation and the channel is mostly unvegetated. The culvert would be abandoned and the ditch would be re-aligned and a new culvert would be constructed across the freeway at about 200 feet north of its current location. A settling basin is located at the northwest quadrant of the interchange and it is surrounded by a chain-link fence, and it was dry at the time of the field survey. The bottom of this basin is covered by ruderal, non-native vegetation. The agricultural ditch and settling basin are unlikely to be considered jurisdictional waters of the United States because they were created in uplands and therefore would likely not be considered subject to U.S. Army Corps of Engineers (ACOE) jurisdiction under Section 404 of the Clean Water Act. However, a final determination of the jurisdictional status of the drainage ditch and the settling basin would be determined in consultation with ACOE during PA/ED phase.

While no wetlands were noted during the reconnaissance survey, if any seasonal water bodies are present in or near the project impact area they will need to be analyzed to determine if they are jurisdictional waters or wetlands. A wetland delineation analysis should be included in the Natural Environment Study Report.

8.16 **Cumulative Impacts:** Based on the 2005 Monterey County RTP, other projects that may have a cumulative impact with the proposed US101/Gloria Road Interchange are the widening of 5th Street over US101 and widening and reconstruction of Alta Street. The cumulative effects of these proposed projects shall be addressed in the environmental document.

8.17 **Context Sensitive Solutions:** In accordance with Caltrans Division of Design, Context Sensitive Solutions shall be implemented in order to address the setting and character of the project area. Through public outreach and approval of non-standard design, options available to State and local highway agency officials shall be implemented to achieve a balanced roadway design and to avoid any possible environmental consequences. Based on the preliminary engineering designs for the proposed interchange, there are no non-standard Caltrans design features anticipated. The policies, practices and/or mandatory design standards shall meet Caltrans design standards, but the philosophy provided by using Context Sensitive Solutions shall be implemented, if necessary.

9. Summary Statement for PSR

The proposed project is anticipated to require an Initial Study/Mitigated Negative Declaration to comply with the California Environmental Quality Act (CEQA) and an Environmental Assessment/Finding of No Significant Impact to comply with the National Environmental Policy Act (NEPA). Caltrans will be the lead agency under both CEQA and NEPA.

The key environmental issues for the build alternatives include potential project effects on biological resources, cultural resources, air quality, and noise and vibration. The required studies include Relocation Impact Study, Archaeological Survey Report, Historic Resources Evaluation Report, Historic Property Survey Report, and Finding of Effect, Initial Site Assessment Report, Air Quality Report, Noise and Vibration Report, Natural Environment Study Report, Wetland & Other Waters Delineation Report, Visual Impact Study Report, Farmland Study, and Biological Assessment Report. No special environmental considerations or processes have been identified at this time which may affect the project delivery or require unusual, exceptional or extended environmental processes. The project will need comply with applicable Monterey County and City of Gonzales general plan policies and Monterey Bay Unified Air Pollution Control District (MBUAPCD) recommended mitigation measures for construction activities where feasible.

Completion of the environmental review process is expected to take up 26 months. Critical path items include preparation of an archaeological survey report, natural environmental study and agency consultation for sensitive species and wetland determination.

Preliminary mitigation commitment costs, estimated for biological and wetland mitigation and permitting at approximately $300,000, are included in the project cost estimate for Build Alternative.

(See Attachment D for the breakdown of the Environmental Commitments Cost Estimate)

10. List of Preparers

Cultural Resources specialist Jennifer Moore, PAR Environmental	Date: April 2008
Biologist Edward Beedy, PAR Environmental	Date: May 2008
Community Impacts specialist Clifford Nale, PG, Mark Thomas & Company	Date: May 2009
Noise and Vibration specialist Clifford Nale, PG, Mark Thomas & Company	Date: May 2008
Air Quality specialist Clifford Nale, PG, Mark Thomas & Company	Date: May 2008

Paleontology specialist/liaison Clifford Nale, PG, Mark Thomas & Company	Date: May 2008
Water Quality specialist Daniel Ho, PE, Mark Thomas & Company	Date: May 2009
Hydrology and Floodplain specialist Daniel Ho, PE, Mark Thomas & Company	Date: May 2009
Hazardous Waste/Materials specialist Clifford Nale, PG, Mark Thomas & Company	Date: April 2008
Visual/Aesthetics specialist Clifford Nale, PG, Mark Thomas & Company	Date: May 2009
Energy and Climate Change specialist Clifford Nale, PG, Mark Thomas & Company	Date: May 2009
Other:	Date:
PEAR Preparer (Name and Title) Daniel Ho, Division Manager, Mark Thomas & Company	Date: May 2011

11. Disclaimer

This report is not an environmental document. Preliminary analysis, determinations, and estimates of mitigation costs are based on the project description provided in this report. The estimates and conclusions provided are approximate and are based on cursory analysis of probable effects. This report is to provide a preliminary level of environmental analysis to supplement the Project Initiation Document. Changes in project scope, alternatives, or environmental laws will require a reevaluation of this report.

12. Review and Approval

I confirm that environmental cost, scope, and schedule have been satisfactorily completed and that the PEAR meets all Caltrans requirements. Also, if the project is scoped as a routine EA, complex EA, or EIS, I verify that the HQ DEA Coordinator has concurred in the Class of Action.

06/09/11 Date: 06/09/11

Matt Fowler, Caltrans Environmental Branch Chief

Jennifer L. Taylor Date: 6/10/11

Jennifer Taylor, Caltrans Environmental Office Chief

Carl Lopez Date: 6-8-11

Carlos Lopez, City Project Manager

REQUIRED ATTACHMENTS:

Attachment A: PEAR Environmental Studies Checklist
Attachment B: Schedule (Gantt Chart)
Attachment C: PEAR Environmental Commitments Cost Estimate (Standard PSR)

Attachment A: PEAR Environmental Studies Checklist

Rev. 11/08

Environmental Studies for PA&ED Checklist					
	Not anticipated	Memo to file	Report required	Risk* L M H	Comments
Land Use	☒	☐	☐	L	
Growth	☒	☐	☐	L	
Farmlands/Timberlands	☐	☐	☒	L	Right-of-Way
Community Impacts	☒	☐	☐	L	
Community Character and Cohesion	☒	☐	☐	L	
Relocations	☐	☐	☒	L	Relocation
Environmental Justice	☒	☐	☐	L	
Utilities/Emergency Services	☒	☐	☐	L	
Visual/Aesthetics	☐	☐	☒	L	
Cultural Resources:	☐	☐	☒	M	
Archaeological Survey Report	☐	☐	☒	M	
Historic Resources Evaluation Report	☐	☐	☒	M	
Historic Property Survey Report	☐	☐	☒	M	
Historic Resource Compliance Report	☒	☐	☐	M	HPSR
Section 106 / PRC 5024 & 5024.5	☐	☐	☒	M	
Native American Coordination	☐	☐	☒	L	
Finding of Effect	☐	☐	☒	L	
Data Recovery Plan	☒	☐	☐	L	
Memorandum of Agreement	☒	☐	☐	L	
Other:	☐	☐	☐	L	
Hydrology and Floodplain	☐	☐	☒	L	
Water Quality and Stormwater Runoff	☐	☐	☒	L	
Geology, Soils, Seismic and Topography	☐	☒	☐	L	
Paleontology	☐	☒	☐	L	
PER	☒	☐	☐	L	
PMP	☒	☐	☐	L	
Hazardous Waste/Materials:	☐	☐	☒	L	
ISA (Additional)	☐	☐	☒	L	
PSI	☒	☐	☐	L	
Other:	☒	☐	☐	L	
Air Quality	☐	☐	☒	L	
Noise and Vibration	☐	☐	☒	L	
Energy and Climate Change	☐	☒	☐	L	
Biological Environment	☐	☐	☒	M	
Natural Environment Study	☐	☐	☒	M	
Section 7:	☒	☐	☐	L	
Formal	☒	☐	☐	L	
Informal	☐	☒	☐	M	
No effect	☒	☐	☐	L	
Section 10	☒	☐	☐	L	
USFWS Consultation	☐	☒	☐	M	
NMFS Consultation	☒	☐	☐	L	
Species of Concern (CNPS, USFS, BLM, S, F)	☐	☐	☒	M	

Environmental Studies for PA&ED Checklist					
	Not anticipated	Memo to file	Report required	Risk* L M H	Comments
Wetlands & Other Waters/Delineation	☒	☐	☒	**H**	Drain Ditch
404(b)(1) Alternatives Analysis	☒	☐	☐	**L**	
Invasive Species	☐	☐	☒	**L**	
Wild & Scenic River Consistency	☒	☐	☐	**L**	
Coastal Management Plan	☒	☐	☐	**L**	
HMMP	☒	☐	☐	**L**	
DFG Consistency Determination	☒	☐	☐	**L**	
2081	☒	☐	☐	**L**	
Other:	☒	☐	☐	**L**	
Cumulative Impacts	☐	☒	☐	**L**	
Context Sensitive Solutions	☐	☒	☐	**L**	
Section 4(f) Evaluation	☒	☐	☐	**L**	
Permits:					
401 Certification Coordination	☐	☒	☐	**L**	
404 Permit Coordination, IP, NWP, or LOP	☐	☒	☐	**L**	
1602 Agreement Coordination	☐	☒	☐	**L**	
Local Coastal Development Permit Coordination	☒	☐	☐	**L**	
State Coastal Development Permit Coordination	☒	☐	☐	**L**	
NPDES Coordination	☐	☒	☐	**L**	
US Coast Guard (Section 10)	☒	☐	☐	**L**	
TRPA	☒	☐	☐	**L**	
BCDC	☒	☐	☐	**L**	

Attachment B

Schedule (Gantt Chart)

US 101 GLORIA ROAD INTERCHANGE IMPROVEMENT PROJECT

PA/ED & FINAL DESIGN SCHEDULE

ID	Task Name	Start	Finish	Duration
1	Notice to Proceed	Tue 1/1/13	Tue 1/1/13	1 day
2	PA/ED PHASE	Wed 1/9/13	Wed 3/4/15	561 days
3	**DATA COLLECTION & REVIEW**	**Wed 1/9/13**	**Thu 6/6/13**	**107 days**
4	Data Gathering	Wed 1/9/13	Wed 2/6/13	21 days
5	Coordination/startup	Wed 1/9/13	Wed 1/9/13	1 day
6	Research & Gather Data	Thu 1/10/13	Wed 2/6/13	20 days
7	Caltrans Process Encroachment Permit	Thu 1/10/13	Wed 1/30/13	15 days
8	Caltrans Issues Permit	Wed 1/30/13	Wed 1/30/13	0 days
9	Field Surveys/Aerial Mapping	Fri 1/11/13	Thu 6/6/13	105 days
10	**Prepare Submittal "A"**	**Fri 1/11/13**	**Thu 2/21/13**	**30 days**
11	Research and Data Gathering / Prepare Submittal "A"	Fri 1/11/13	Thu 1/24/13	10 days
12	Submittal "A" to CT Surveys	Thu 1/24/13	Thu 1/24/13	0 days
13	CT Review and Approval	Fri 1/25/13	Thu 2/21/13	20 days
14	**Prepare Submittal "B"**	**Thu 1/31/13**	**Thu 4/4/13**	**46 days**
15	Perform Field Surveys	Thu 1/31/13	Wed 2/13/13	10 days
16	Prepare GPS Report	Fri 2/22/13	Thu 3/7/13	10 days
17	Submittal "B" to CT Surveys	Thu 3/7/13	Thu 3/7/13	0 days
18	CT Reviews Submittal "B"	Fri 3/8/13	Thu 4/4/13	20 days
19	**Prepare Submittal "C"**	**Fri 3/8/13**	**Thu 6/6/13**	**65 days**
20	Prepare Aerotriangualtion	Fri 3/8/13	Thu 3/14/13	5 days
21	CT Review	Fri 3/15/13	Thu 4/11/13	20 days
22	Aerial Mapping	Fri 3/15/13	Thu 4/4/13	15 days
23	Submittal "C" to CT Surveys	Thu 4/4/13	Thu 4/4/13	0 days
24	CT Reviews and Comments	Fri 4/5/13	Thu 5/16/13	30 days
25	Respond to Comments / Submit Revised Mapping	Fri 5/17/13	Thu 5/23/13	5 days
26	Aerial Mapping Approved by CT	Thu 5/23/13	Thu 5/23/13	0 days
27	Prepare Submittal to ESC	Fri 5/24/13	Thu 6/6/13	10 days
28	Establish Right of Way Line	Thu 2/7/13	Thu 5/23/13	76 days
29	Request R/W info from Caltrans	Thu 2/7/13	Wed 2/13/13	5 days
30	Establish R/W	Fri 4/5/13	Thu 4/25/13	15 days
31	Hardcopy Survey	Fri 4/26/13	Thu 5/23/13	20 days
32	Utility Base Mapping	Thu 3/7/13	Thu 4/25/13	36 days
33	Submit letters to Utility Companies (VTA)	Thu 3/7/13	Wed 3/13/13	5 days
34	Utility mapping	Fri 4/12/13	Thu 4/25/13	10 days
35	**ALTERNATIVE REFINEMENT**	**Wed 1/30/13**	**Tue 5/21/13**	**80 days**
36	**Update Traffic Studies**	**Wed 1/30/13**	**Tue 5/21/13**	**80 days**
37	Update Traffic Operations Studies	Wed 1/30/13	Tue 3/12/13	30 days
38	Caltrans Reviews and Comments	Wed 3/13/13	Tue 4/23/13	30 days
39	Prepare and Submit updated Final TOAR	Wed 4/24/13	Tue 5/21/13	20 days
40	Caltrans Approve Updated Traffic Operations Studies	Tue 5/21/13	Tue 5/21/13	0 days
41	**Geometric Refinement**	**Fri 4/5/13**	**Thu 5/16/13**	**30 days**
42	Update Conceptual Geometrics & Profiles	Fri 4/5/13	Thu 5/16/13	30 days
43	**ENVIRONMENTAL DOCUMENTATION**	**Fri 4/5/13**	**Wed 1/14/15**	**464 days**
44	**Prepare Environmental Technical Reports and Memos**	**Fri 4/5/13**	**Thu 10/3/13**	**130 days**
45	**Agricultural Analysis**	**Fri 5/17/13**	**Thu 9/5/13**	**80 days**
46	Perform Agricultural Analysis	Fri 5/17/13	Thu 6/13/13	20 days
47	Submit Draft Agricucultural Analysis	Thu 6/13/13	Thu 6/13/13	0 days
48	Caltrans Review Agricultural Analysis	Fri 6/14/13	Thu 7/25/13	30 days
49	CT Complete Agricultural Study Review	Thu 7/25/13	Thu 7/25/13	0 days
50	Update Agricultural Analysis	Fri 7/26/13	Thu 8/8/13	10 days
51	Submit Final Agricultural Analysis	Thu 8/8/13	Thu 8/8/13	0 days
52	CT Review Final Agricultural Analysis	Fri 8/9/13	Thu 9/5/13	20 days
53	CT approves Agricultural Analysis	Thu 9/5/13	Thu 9/5/13	0 days
54	**Climate Change Analysis**	**Fri 5/17/13**	**Thu 8/22/13**	**70 days**
55	Conduct Draft Climate Change Analysis	Fri 5/17/13	Thu 5/30/13	10 days
56	Submit Draft Climate Change Analysis	Thu 5/30/13	Thu 5/30/13	0 days
57	Caltrans Review Draft Climate Analysis	Fri 5/31/13	Thu 7/11/13	30 days
58	CT Complete Climate Change Analysis Review	Thu 7/11/13	Thu 7/11/13	0 days

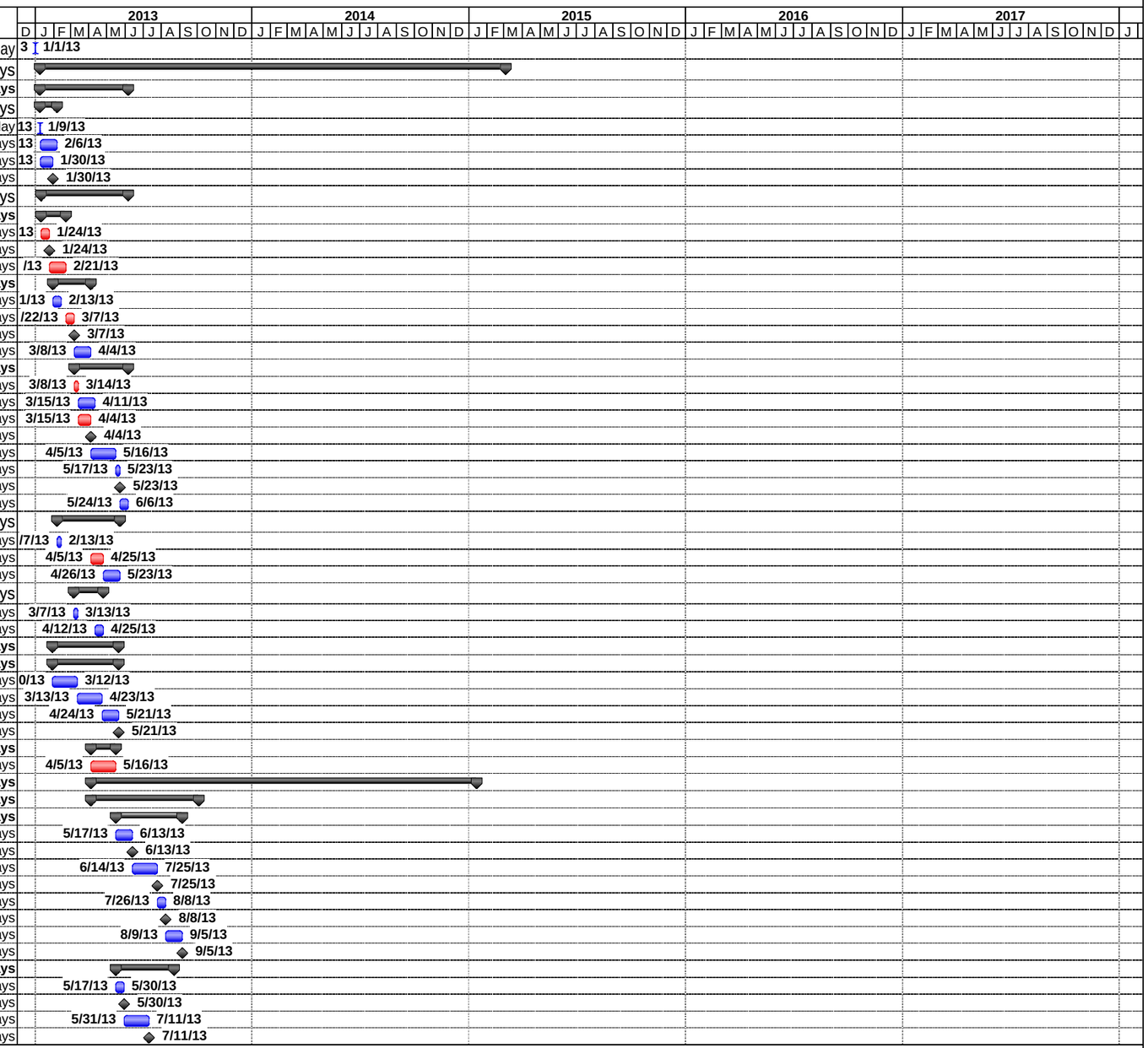

Project: US101 Gloria Road Interchang
Date: Thu 5/12/11

Task		Critical Task Progress		Rolled Up Task		Rolled Up Progress		Project Summary	
Task Progress		Milestone		Rolled Up Critical Task		Split		Group By Summary	
Critical Task		Summary		Rolled Up Milestone		External Tasks		Deadline	

US 101 GLORIA ROAD INTERCHANGE IMPROVEMENT PROJECT

PA/ED & FINAL DESIGN SCHEDULE

ID	Task Name	Start	Finish	Duration
59	Update Climate Change Analysis	Fri 7/12/13	Thu 7/25/13	10 days
60	Submit Final Climate Change Analysis	Thu 7/25/13	Thu 7/25/13	0 days
61	CT Review Final Climate Change Analysis	Fri 7/26/13	Thu 8/22/13	20 days
62	CT Approves Climate Change Analysis	Thu 8/22/13	Thu 8/22/13	0 days
63	**NES Natural Env. Study**	**Fri 4/5/13**	**Thu 10/3/13**	**130 days**
64	Field Survey for Biology	Fri 4/5/13	Thu 6/6/13	45 days
65	Field Survey for Plants/Tree	Fri 4/5/13	Thu 6/6/13	45 days
66	Compile lists/prepare NES Report	Fri 6/7/13	Thu 7/4/13	20 days
67	Submit Draft NES	Fri 7/5/13	Fri 7/5/13	0 days
68	Caltrans Review NES	Fri 7/5/13	Thu 8/15/13	30 days
69	CT Completes Review NES	Thu 8/15/13	Thu 8/15/13	0 days
70	Update NES	Fri 8/16/13	Thu 9/5/13	15 days
71	Submit Final NES	Thu 9/5/13	Thu 9/5/13	0 days
72	CT Review Final NES	Fri 9/6/13	Thu 10/3/13	20 days
73	CT Approves NES Report	Thu 9/19/13	Thu 9/19/13	0 days
74	**Visual Impact Study**	**Fri 5/3/13**	**Thu 8/29/13**	**85 days**
75	Prepare VIA	Fri 5/3/13	Thu 6/6/13	25 days
76	Submit Draft VIA Report	Thu 6/6/13	Thu 6/6/13	0 days
77	Caltrans Review VIA Report	Fri 6/7/13	Thu 7/18/13	30 days
78	CT Completes Review VIA Report	Thu 7/18/13	Thu 7/18/13	0 days
79	Update VIA Report	Fri 7/19/13	Thu 8/1/13	10 days
80	Submit Final VIA Report	Thu 8/1/13	Thu 8/1/13	0 days
81	CT Review Final VIA Report	Fri 8/2/13	Thu 8/29/13	20 days
82	CT Approves VIA Report	Thu 8/15/13	Thu 8/15/13	0 days
83	**Other Env. Screening Memos**	**Fri 5/17/13**	**Tue 9/17/13**	**88 days**
84	Delineate Study Area	Fri 5/17/13	Thu 5/23/13	5 days
85	Prepare APE	Fri 5/24/13	Thu 6/6/13	10 days
86	Submit APE	Thu 6/6/13	Thu 6/6/13	0 days
87	Caltrans Review	Fri 6/7/13	Thu 7/4/13	20 days
88	APE Approved by Caltrans	Thu 7/4/13	Thu 7/4/13	0 days
89	Caltrans Prepare ASR, HRER, HPS Screening Memo	Fri 7/5/13	Thu 8/1/13	20 days
90	Prepare Air Quality and Paleontology Screening Memo	Fri 7/5/13	Thu 8/1/13	20 days
91	Submit Env. Screening Memo	Thu 8/1/13	Thu 8/1/13	0 days
92	CT Review Env. Screening Memos	Fri 8/2/13	Thu 9/12/13	30 days
93	CT Completes Env. Screening Memo Review	Thu 9/12/13	Thu 9/12/13	0 days
94	Finalize Env. Screening Memo	Wed 9/11/13	Tue 9/17/13	5 days
95	CT Approves Final Env. Screening Memo	Tue 9/17/13	Tue 9/17/13	0 days
96	**Location Hydraulic Report/Floodplain Evaluation Report**	**Fri 5/17/13**	**Fri 9/6/13**	**81 days**
97	Conduct Field Survey	Fri 5/17/13	Fri 5/17/13	1 day
98	Prepare LH/FE Report	Mon 5/20/13	Fri 6/14/13	20 days
99	Submit LH/FE Report	Fri 6/14/13	Fri 6/14/13	0 days
100	CT Review LH/FE Report	Mon 6/17/13	Fri 7/26/13	30 days
101	CT Completes Review LH/LE Report	Fri 7/26/13	Fri 7/26/13	0 days
102	Update LH/FE Report	Mon 7/29/13	Fri 8/9/13	10 days
103	Submit final LH/FE Report	Fri 8/9/13	Fri 8/9/13	0 days
104	CT Reviews Final LH/FE Report	Mon 8/12/13	Fri 9/6/13	20 days
105	CT Approves LH/FE Report	Fri 9/6/13	Fri 9/6/13	0 days
106	**Water Quality Report**	**Fri 5/17/13**	**Fri 8/23/13**	**71 days**
107	Conduct Field Survey	Fri 5/17/13	Fri 5/17/13	1 day
108	Prepare Water Quality Report	Mon 5/20/13	Fri 6/7/13	15 days
109	Submit Water Quality Study	Fri 6/7/13	Fri 6/7/13	0 days
110	CT Review Water Quality Report	Mon 6/10/13	Fri 7/5/13	20 days
111	CT Completes Review Water Quality Report	Fri 7/5/13	Fri 7/5/13	0 days
112	Update Water Quality	Mon 7/8/13	Fri 7/26/13	15 days
113	Submit final Water Quality Report	Fri 7/26/13	Fri 7/26/13	0 days
114	CT Reviews Final WQ Report	Mon 7/29/13	Fri 8/23/13	20 days
115	CT Approves Water Quality Report	Fri 8/23/13	Fri 8/23/13	0 days
116	**Storm Water Data Report**	**Fri 5/17/13**	**Thu 8/22/13**	**70 days**
117	Prepare SWDR	Fri 5/17/13	Thu 6/6/13	15 days
118	Submit SWDR	Thu 6/6/13	Thu 6/6/13	0 days

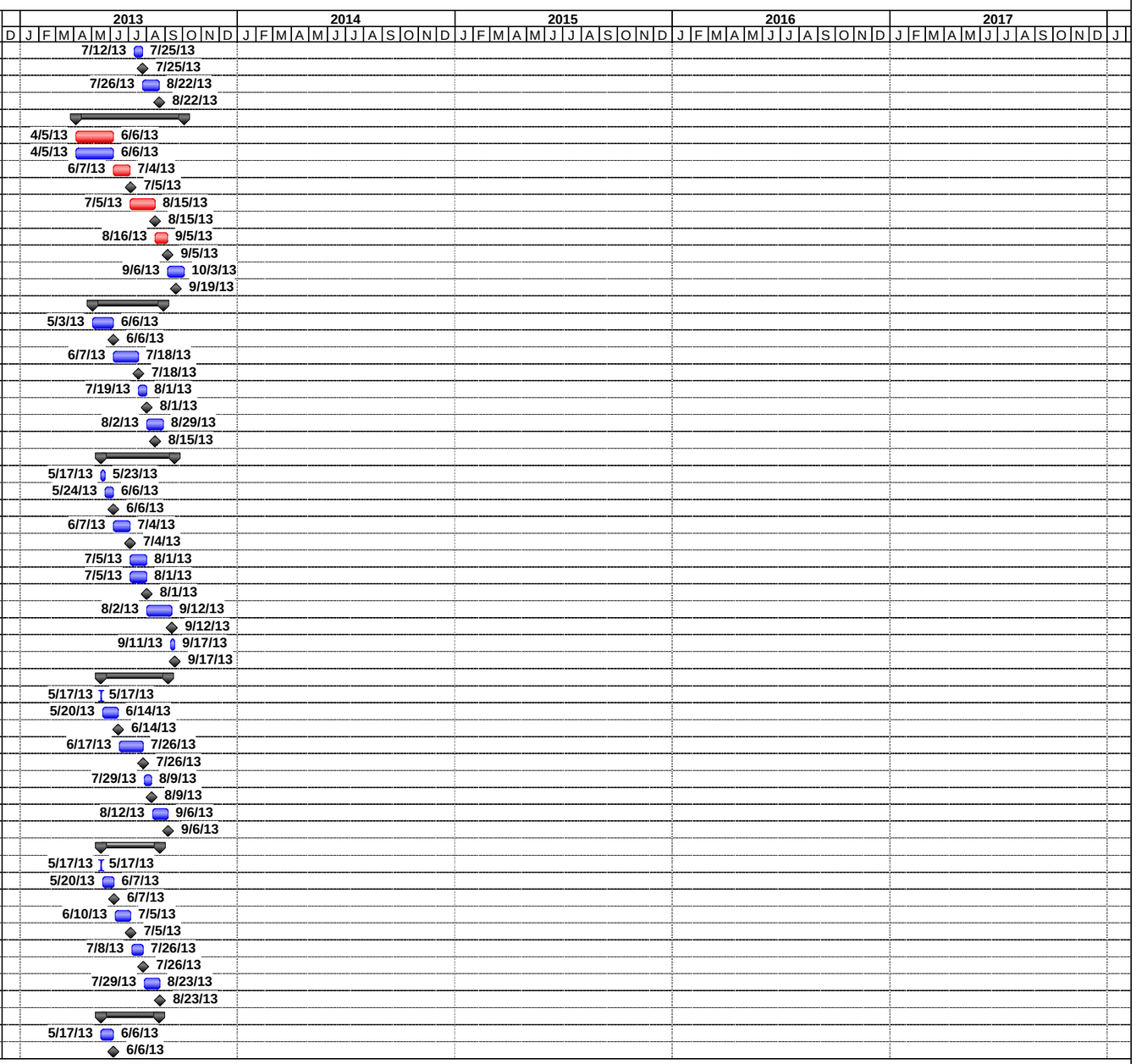

Project: US101 Gloria Road Interchang
Date: Thu 5/12/11

Task | Task Progress | Critical Task | Critical Task Progress | Milestone | Summary | Rolled Up Task | Rolled Up Critical Task | Rolled Up Milestone | Rolled Up Progress | Split | External Tasks | Project Summary | Group By Summary | Deadline

US 101 GLORIA ROAD INTERCHANGE IMPROVEMENT PROJECT

PA/ED & FINAL DESIGN SCHEDULE

ID	Task Name	Start	Finish	Duration
119	CT Review SWDR	Fri 6/7/13	Thu 7/4/13	20 days
120	CT Completes Review SWDR	Thu 7/4/13	Thu 7/4/13	0 days
121	Update SWDR	Fri 7/5/13	Thu 7/25/13	15 days
122	Submit final SWDR	Thu 7/25/13	Thu 7/25/13	0 days
123	CT Reviewa final SWDR	Fri 7/26/13	Thu 8/22/13	20 days
124	CT Approves SWDR	Thu 8/22/13	Thu 8/22/13	0 days
125	**Geotechnical Impact Report**	**Fri 4/5/13**	**Fri 6/21/13**	**56 days**
126	Review Caltrans Geotech Requirements	Fri 4/5/13	Mon 4/8/13	2 days
127	Data Search - Soils	Tue 4/9/13	Wed 4/10/13	2 days
128	Field Reconnaisance	Thu 4/11/13	Fri 4/12/13	2 days
129	Prepare Geotechnical/Soils Mapping	Mon 4/29/13	Fri 5/10/13	10 days
130	Prepare Geotechnical Findings	Mon 5/13/13	Fri 5/24/13	10 days
131	Submit Geotechnical Study	Fri 6/21/13	Fri 6/21/13	0 days
132	**IS/MND Preparation**	**Fri 8/23/13**	**Thu 10/3/13**	**30 days**
133	Prepare Admin Draft IS/MND	Fri 8/23/13	Thu 9/19/13	20 days
134	Submit Admin. Draft IS/MND to City	Thu 9/19/13	Thu 9/19/13	0 days
135	City Review Admin. Draft IS/MND	Fri 9/20/13	Thu 9/26/13	5 days
136	Update Admin Draft IS/MND per City's comments	Fri 9/27/13	Thu 10/3/13	5 days
137	**CT Review Draft IS/MND**	**Thu 10/3/13**	**Fri 5/2/14**	**151 days**
138	Submit 1st Admin. Draft IS/MND to CT D5	Thu 10/3/13	Thu 10/3/13	0 days
139	CT D5 Review 1st Admin. Draft IS/MND	Fri 10/4/13	Thu 11/14/13	30 days
140	CT D5 Completes Review 1st Admin. Draft IS/MND	Thu 11/14/13	Thu 11/14/13	0 days
141	Update 1st Admin Draft IS/MND per CT D5 comments	Fri 11/15/13	Thu 12/5/13	15 days
142	CT D5 Review and Approval ofRrevised Admin Draft IS/MND	Fri 12/6/13	Thu 12/12/13	5 days
143	CT D5 Senior Reeview and Approval of Admin Draft IS/MND	Fri 12/13/13	Thu 1/9/14	20 days
144	Submit 2nd Admin Draft IS/MNDfor CT QA/QC Review	Thu 1/9/14	Thu 1/9/14	0 days
145	CT QA/QC Review 2nd Admin Draft IS/MND	Fri 1/10/14	Fri 1/31/14	16 days
146	CT Completes QA/QC Review 2nd Admin Draft IS/MND	Fri 1/31/14	Fri 1/31/14	0 days
147	Update 2nd draft Admin IS/MND per CT QA/QC comments	Mon 2/3/14	Fri 2/21/14	15 days
148	Submit 3rd admin draft IS/MND to 2nd CT QA/QC Review	Fri 2/21/14	Fri 2/21/14	0 days
149	CT 2nd QA/QC Review 3rd admin draft IS/MND	Mon 2/24/14	Fri 3/7/14	10 days
150	CT Completes QA/QC Review 3rd Admin Draft IS/MND	Fri 3/7/14	Fri 3/7/14	0 days
151	Update 3rd draft Admin IS/MND per CT 2nd QA/QC comments	Mon 3/10/14	Fri 3/21/14	10 days
152	Submit 4th admin draft IS/MND to CT Management Review	Fri 3/21/14	Fri 3/21/14	0 days
153	CT Management Review 4th admin draft IS/MND	Mon 3/24/14	Fri 4/4/14	10 days
154	CT Management Completes Review 4th Admin Draft IS/MND	Fri 4/4/14	Fri 4/4/14	0 days
155	Update draft IS/MND per CT Management Review	Mon 4/7/14	Fri 4/18/14	10 days
156	Submit draft IS/MND for approval	Fri 4/18/14	Fri 4/18/14	0 days
157	CT review draft IS/MND for circulation	Mon 4/21/14	Fri 5/2/14	10 days
158	Draft IS/MND Approved for Circulation	Fri 5/2/14	Fri 5/2/14	0 days
159	**DED Circulation Period**	**Mon 5/19/14**	**Wed 7/2/14**	**33 days**
160	Update/Prepare 45 copies draft IS/MND	Mon 5/19/14	Fri 5/23/14	5 days
161	Mail draft IS/MND Clearinghouse/Others	Fri 5/23/14	Fri 5/23/14	0 days
162	State Clearinghouse Publishes and Mails draft IS/MND	Mon 5/26/14	Fri 5/30/14	5 days
163	30-Day Circulation period	Mon 6/2/14	Wed 7/2/14	23 days
164	End of Public Circulation	Wed 7/2/14	Wed 7/2/14	0 days
165	Schedule Public Hearing	Mon 5/26/14	Fri 5/30/14	5 days
166	Hold Public Meeting	Wed 6/18/14	Wed 6/18/14	0 days
167	**Final IS/MND**	**Thu 7/3/14**	**Wed 1/14/15**	**140 days**
168	Prepare Responses to comments	Thu 7/3/14	Wed 7/16/14	10 days
169	Prepare Final IS/MND	Thu 7/17/14	Wed 8/13/14	20 days
170	**CT Review Final IS/MND**	**Wed 8/13/14**	**Wed 12/31/14**	**100 days**
171	Submit 1st Admin. Final IS/MND to CT D5	Wed 8/13/14	Wed 8/13/14	0 days
172	CT D5 Review 1st draft Final IS/MND	Thu 8/14/14	Wed 9/24/14	30 days
173	CT D5 Completes Review 1st Draft Final IS/MND	Wed 9/24/14	Wed 9/24/14	0 days
174	Update 1st Draft Final IS/MND per CT D5 comments	Thu 9/25/14	Wed 10/8/14	10 days
175	Submit 2nd Draft Final IS/MND for CT QA/QC Review	Wed 10/8/14	Wed 10/8/14	0 days
176	CT QA/QC Review 2nd Draft Final IS/MND	Thu 10/9/14	Wed 10/22/14	10 days
177	CT Completes QA/QC Review 2nd Draft Final IS/MND	Wed 10/22/14	Wed 10/22/14	0 days
178	Update 2nd draft Final IS/MND per CT QA/QC comments	Thu 10/23/14	Wed 11/5/14	10 days

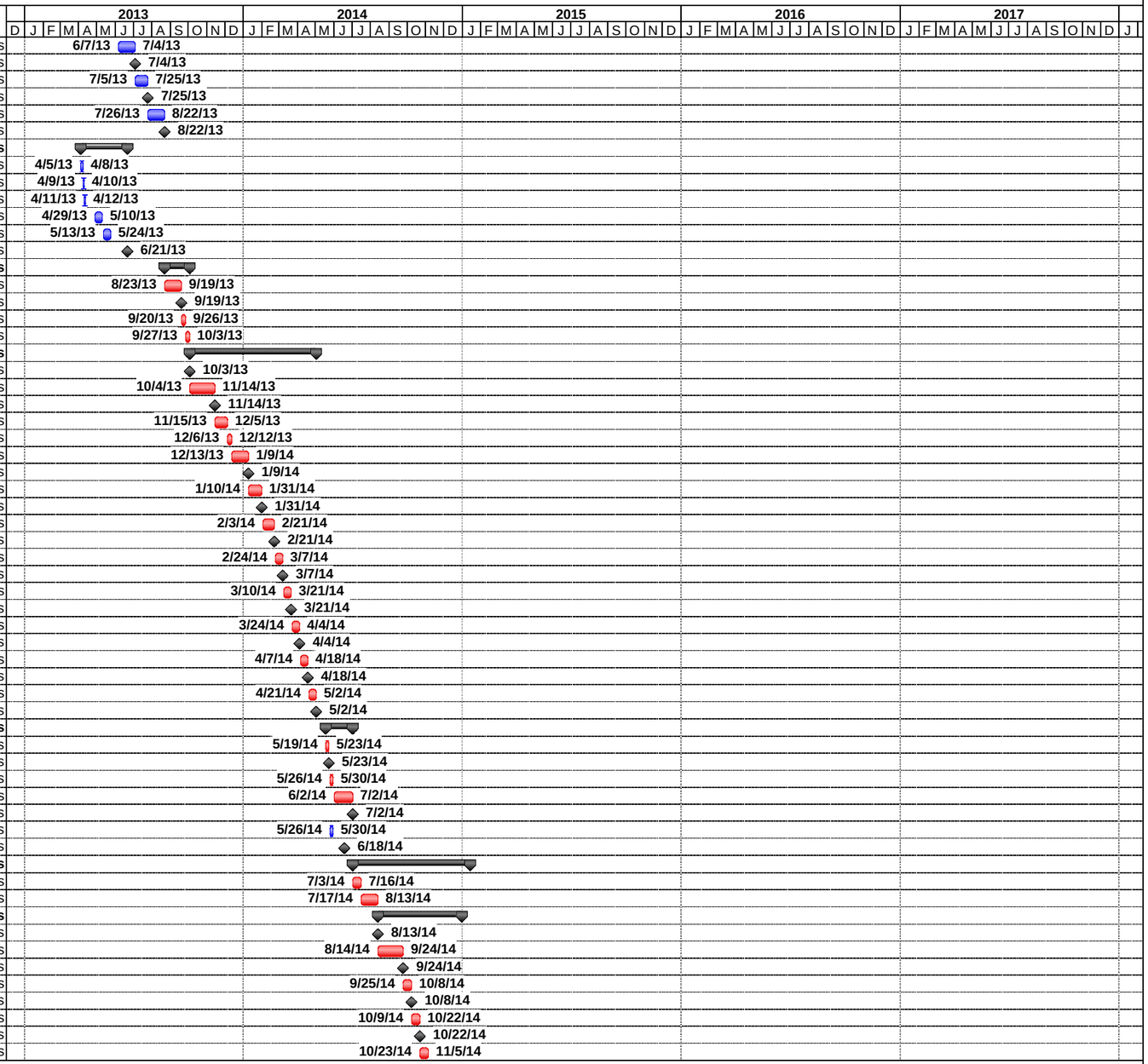

Project: US101 Gloria Road Interchang
Date: Thu 5/12/11

Task | Task Progress | Critical Task | Critical Task Progress | Milestone | Summary | Rolled Up Task | Rolled Up Critical Task | Rolled Up Milestone | Rolled Up Progress | Split | External Tasks | Project Summary | Group By Summary | Deadline

US 101 GLORIA ROAD INTERCHANGE IMPROVEMENT PROJECT

PA/ED & FINAL DESIGN SCHEDULE

ID	Task Name	Start	Finish	Duration
179	Submit 3rd draft Final IS/MND to CT 2nd QA/QC Review	Wed 11/5/14	Wed 11/5/14	0 days
180	CT 2nd QA/QC Review 3rd draft Final IS/MND	Thu 11/6/14	Wed 11/19/14	10 days
181	CT Completes 2nd QA/QC Review 3rd Draft Final IS/MND	Wed 11/19/14	Wed 11/19/14	0 days
182	Update 3rd draft Final IS/MND per CT 2nd QA/QC comments	Thu 11/20/14	Wed 11/26/14	5 days
183	Submit 4th draft Final IS/MND to CT Management Review	Wed 11/26/14	Wed 11/26/14	0 days
184	CT Management Review 4th draft Final IS/MND	Thu 11/27/14	Wed 12/17/14	15 days
185	CT Management Completes Review 4th Draft Final IS/MND	Wed 12/17/14	Wed 12/17/14	0 days
186	Update Final IS/MND per CT Management Review	Thu 12/18/14	Wed 12/31/14	10 days
187	Submit Final IS/MND for approval	Wed 12/31/14	Wed 12/31/14	0 days
188	CT approves CEQA Clearance	Wed 1/14/15	Wed 1/14/15	0 days
189	Final MND Approved	Wed 1/14/15	Wed 1/14/15	0 days
190	**PROJECT REPORT**	**Fri 5/17/13**	**Wed 3/4/15**	**469 days**
191	**GAD Process**	**Fri 5/17/13**	**Mon 8/26/13**	**72 days**
192	Prepare GAD	Fri 5/17/13	Thu 6/13/13	20 days
193	Submit GAD	Thu 6/20/13	Thu 6/20/13	0 days
194	Caltrans Review GAD	Fri 6/21/13	Thu 7/18/13	20 days
195	CT Completes GAD Review	Thu 7/18/13	Thu 7/18/13	0 days
196	Update GAD	Tue 7/30/13	Mon 8/19/13	15 days
197	Submit Final GAD	Mon 8/19/13	Mon 8/19/13	0 days
198	GAD Approved by CT	Mon 8/26/13	Mon 8/26/13	0 days
199	**Update Advance Planning Study**	**Tue 7/23/13**	**Mon 8/12/13**	**15 days**
200	Update APS	Tue 7/23/13	Mon 8/12/13	15 days
201	**Design Checklist/Fact Sheet**	**Fri 5/31/13**	**Mon 8/19/13**	**57 days**
202	Identify Non Standard Features	Fri 5/31/13	Thu 6/13/13	10 days
203	Prepare Design Exception Fact Sheet	Tue 7/23/13	Mon 8/19/13	20 days
204	**Stage Construction/Traffic Handling Evaluation**	**Tue 7/30/13**	**Mon 8/12/13**	**10 days**
205	Develop Stage Construction Concept Plan	Tue 7/30/13	Mon 8/12/13	10 days
206	**Traffic Management Plan**	**Tue 8/13/13**	**Mon 9/2/13**	**15 days**
207	Prepare Traffic Management Plan/Lane Closure Report	Tue 8/13/13	Mon 9/2/13	15 days
208	**Landscape & Gateway Concept Plan**	**Tue 7/23/13**	**Mon 8/12/13**	**15 days**
209	Prepare Landscape/Gateway Concept Plan	Tue 7/23/13	Mon 8/12/13	15 days
210	**Preliminary Cost Estimate**	**Tue 8/13/13**	**Mon 8/19/13**	**5 days**
211	Preliminary Cost estimate	Tue 8/13/13	Mon 8/19/13	5 days
212	**Right-of-way Impacts/Estimates**	**Tue 7/30/13**	**Mon 8/19/13**	**15 days**
213	Preliminary r/w impacts/estimates	Tue 7/30/13	Mon 8/12/13	10 days
214	Prepare R/W Data Sheet	Fri 8/16/13	Mon 8/19/13	2 days
215	**Assess Utility Conflicts**	**Tue 8/13/13**	**Mon 8/19/13**	**5 days**
216	Assess Utilitp Conflicts	Tue 8/13/13	Mon 8/19/13	5 days
217	**Phased Implementation Plan**	**Tue 8/13/13**	**Mon 8/19/13**	**5 days**
218	Develop Phased Implementation Plan	Tue 8/13/13	Mon 8/19/13	5 days
219	**Draft PR**	**Fri 7/26/13**	**Fri 5/16/14**	**211 days**
220	Prepare draft admin PR	Fri 7/26/13	Thu 9/5/13	30 days
221	Submit Draft Admin PR	Thu 9/5/13	Thu 9/5/13	0 days
222	Caltrans Review DA PR	Fri 9/6/13	Thu 10/17/13	30 days
223	CT Completes Review DA PR	Thu 10/17/13	Thu 10/17/13	0 days
224	Update Draft PR	Fri 10/18/13	Thu 10/31/13	10 days
225	Submit Draft PR	Thu 10/31/13	Thu 10/31/13	0 days
226	CT Review Draft PR	Fri 11/1/13	Thu 11/28/13	20 days
227	Update Draft PR	Mon 2/17/14	Fri 2/21/14	5 days
228	District 05 Approval of Draft PR	Mon 5/5/14	Fri 5/16/14	10 days
229	**Final PR**	**Thu 1/15/15**	**Wed 3/4/15**	**35 days**
230	Update Final PR	Thu 1/15/15	Wed 2/4/15	15 days
231	Submit Final PR	Wed 2/4/15	Wed 2/4/15	0 days
232	CT Approval Process	Thu 2/5/15	Wed 3/4/15	20 days
233	Project Report Approved	Wed 3/4/15	Wed 3/4/15	0 days
234	**RIGHT-OF-WAY APPRAISAL & ACQUISITION**	**Tue 7/1/14**	**Tue 11/17/15**	**361 days**
235	**Appraisal Mapping/Plats & Legal**	**Tue 7/1/14**	**Mon 1/12/15**	**140 days**
236	Prepare R/W Appraisal Maps	Tue 7/1/14	Mon 9/1/14	45 days
237	Submit Draft Appraisal Map to Caltrans R/W	Mon 9/1/14	Mon 9/1/14	0 days
238	Caltrans Review and Comment - Cycle 1 Appraisal Map	Tue 9/2/14	Mon 10/13/14	30 days

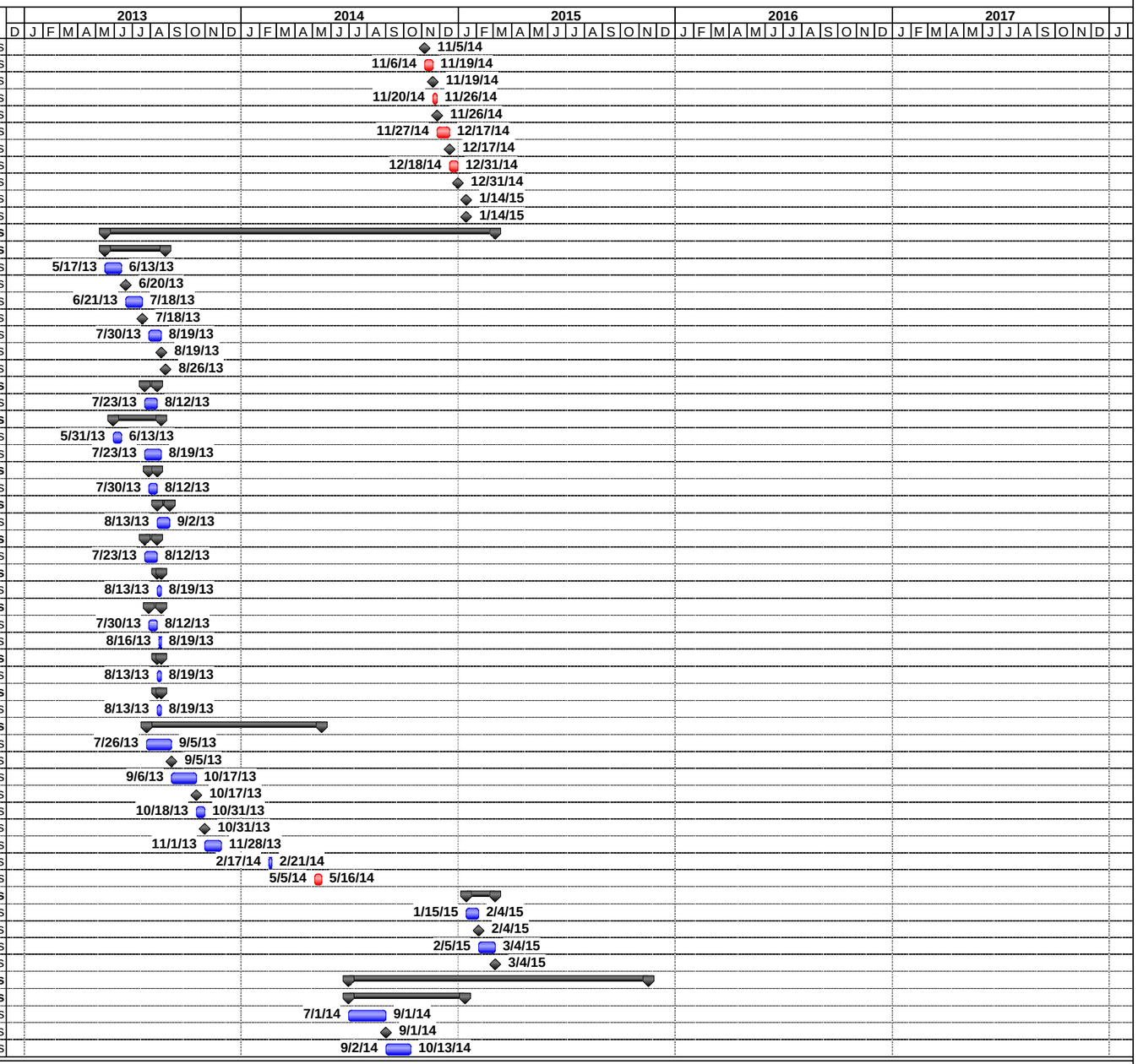

Project: US101 Gloria Road Interchang
Date: Thu 5/12/11

Task | Task Progress | Critical Task | Critical Task Progress | Milestone | Summary | Rolled Up Task | Rolled Up Critical Task | Rolled Up Milestone | Rolled Up Progress | Split | External Tasks | Project Summary | Group By Summary | Deadline

US 101 GLORIA ROAD INTERCHANGE IMPROVEMENT PROJECT

PA/ED & FINAL DESIGN SCHEDULE

ID	Task Name	Start	Finish	Duration
239	Caltrans Completes Appraisal Map First Review	Mon 10/13/14	Mon 10/13/14	0 days
240	Respond to Comments on Appraisal Map/Prepare Legals	Tue 10/14/14	Mon 11/10/14	20 days
241	Submit Revised Appraisal Maps/Legals to Caltrans R/W	Mon 11/10/14	Mon 11/10/14	0 days
242	Caltrans Review and Comment - Cycle 2	Tue 11/11/14	Mon 12/8/14	20 days
243	Caltrans Completes Appraisal Map/Legals Review - Cycle 2	Mon 12/8/14	Mon 12/8/14	0 days
244	Respond to Comments AM/Legals	Tue 12/9/14	Mon 12/29/14	15 days
245	Submit Final Appraisal Maps / Legals to Caltrans	Mon 12/29/14	Mon 12/29/14	0 days
246	Caltrans Final Reviews / Comments AM/Legals	Mon 12/29/14	Mon 12/29/14	0 days
247	Caltrans Completes Final Review AM/Legals	Mon 12/29/14	Mon 12/29/14	0 days
248	Finalize AM/Legals	Tue 12/30/14	Mon 1/12/15	10 days
249	Caltrans Approves Appraisal Maps / Legals	Mon 1/12/15	Mon 1/12/15	0 days
250	**R/W APPRAISAL & ACQUISITION**	**Thu 1/1/15**	**Tue 11/17/15**	**229 days**
251	**Appraisal/Acquisition Process**	**Thu 1/1/15**	**Tue 9/15/15**	**184 days**
252	Prepare Notices of Decision to Appraise	Thu 1/1/15	Wed 1/14/15	10 days
253	Issue Notices of Decision to Appraise	Wed 1/21/15	Wed 1/21/15	0 days
254	Appraise Properties	Thu 1/22/15	Wed 2/11/15	15 days
255	Appraisals Completed	Wed 2/11/15	Wed 2/11/15	0 days
256	City Review Appraisals	Thu 2/12/15	Wed 2/18/15	5 days
257	City Complete Review of Appraisals	Wed 2/18/15	Wed 2/18/15	0 days
258	Update and Complete Appraisals	Thu 2/19/15	Thu 3/5/15	11 days
259	City Approves Appraisals	Thu 3/5/15	Thu 3/5/15	0 days
260	Prepare First Written Offers	Fri 3/6/15	Thu 3/19/15	10 days
261	Present First Written Offers	Thu 3/19/15	Thu 3/19/15	0 days
262	Continue with FWO for all properties	Fri 3/20/15	Thu 4/16/15	20 days
263	Negotiate with Owners	Fri 4/17/15	Tue 9/15/15	108 days
264	**Settlement Negotiated**	**Wed 9/16/15**	**Tue 11/17/15**	**45 days**
265	Coordinate Title and Escrow Instructions	Wed 9/16/15	Tue 10/6/15	15 days
266	Close Escrow/Deeds Recorded -	Wed 10/7/15	Tue 10/27/15	15 days
267	Title Insurance Issued	Wed 11/4/15	Tue 11/17/15	10 days
268	Properties Acquired from Negotiated Owners-Title Transferred.	Tue 11/17/15	Tue 11/17/15	0 days
269	**FINAL DESIGN/PS&E PHASE**	**Fri 5/16/14**	**Tue 12/1/15**	**402 days**
270	**Begin Final Design**	Fri 5/16/14	Fri 5/16/14	0 days
271	**Supplemental Field Survey**	**Mon 5/19/14**	**Fri 6/27/14**	**30 days**
272	Perform Final Design Survey	Mon 5/19/14	Fri 6/27/14	30 days
273	**Utility Mapping**	**Mon 6/30/14**	**Fri 7/25/14**	**20 days**
274	Update Utility Mapping	Mon 6/30/14	Fri 7/25/14	20 days
275	**Engineering Reports**	**Mon 5/19/14**	**Tue 12/16/14**	**152 days**
276	**Drainage Report**	**Mon 5/19/14**	**Fri 7/18/14**	**45 days**
277	Compile Drainage Maps	Mon 5/19/14	Fri 5/23/14	5 days
278	Prepare Drainage Shed Maps	Mon 5/26/14	Fri 5/30/14	5 days
279	Prepare Drainage Concept Plan	Mon 6/2/14	Fri 6/20/14	15 days
280	Prepare Conceptual Drainage Report	Mon 6/23/14	Fri 7/18/14	20 days
281	**Storm Water Data Report**	**Mon 6/23/14**	**Fri 7/18/14**	**20 days**
282	Update SWDR	Mon 6/23/14	Fri 7/18/14	20 days
283	**Geotechnical Design and Material Report**	**Mon 5/19/14**	**Fri 11/14/14**	**130 days**
284	Prepare Boring Locations	Mon 5/19/14	Fri 5/23/14	5 days
285	Submit Boring Locations to CT	Fri 5/30/14	Fri 5/30/14	0 days
286	CT Review Boring Locations	Mon 6/2/14	Fri 6/13/14	10 days
287	CT Approves Boring Locations	Fri 6/13/14	Fri 6/13/14	0 days
288	Field Explorations	Mon 6/16/14	Fri 7/11/14	20 days
289	Complete Field Explorations	Fri 7/11/14	Fri 7/11/14	0 days
290	Lab Analysis	Mon 7/14/14	Fri 8/8/14	20 days
291	Lab Work Completed	Fri 8/8/14	Fri 8/8/14	0 days
292	Prepare Materials Report/AL Report	Mon 8/11/14	Fri 9/5/14	20 days
293	Prepare Geotechnical Report	Mon 8/11/14	Fri 9/5/14	20 days
294	Submit Draft GDMR to CT	Fri 9/5/14	Fri 9/5/14	0 days
295	CT Review Draft GDMR	Mon 9/8/14	Fri 10/17/14	30 days
296	CT Completes Draft GDMR	Fri 10/17/14	Fri 10/17/14	0 days
297	Update GDMR	Mon 10/20/14	Fri 11/14/14	20 days
298	Submit Final GDMR	Fri 11/14/14	Fri 11/14/14	0 days

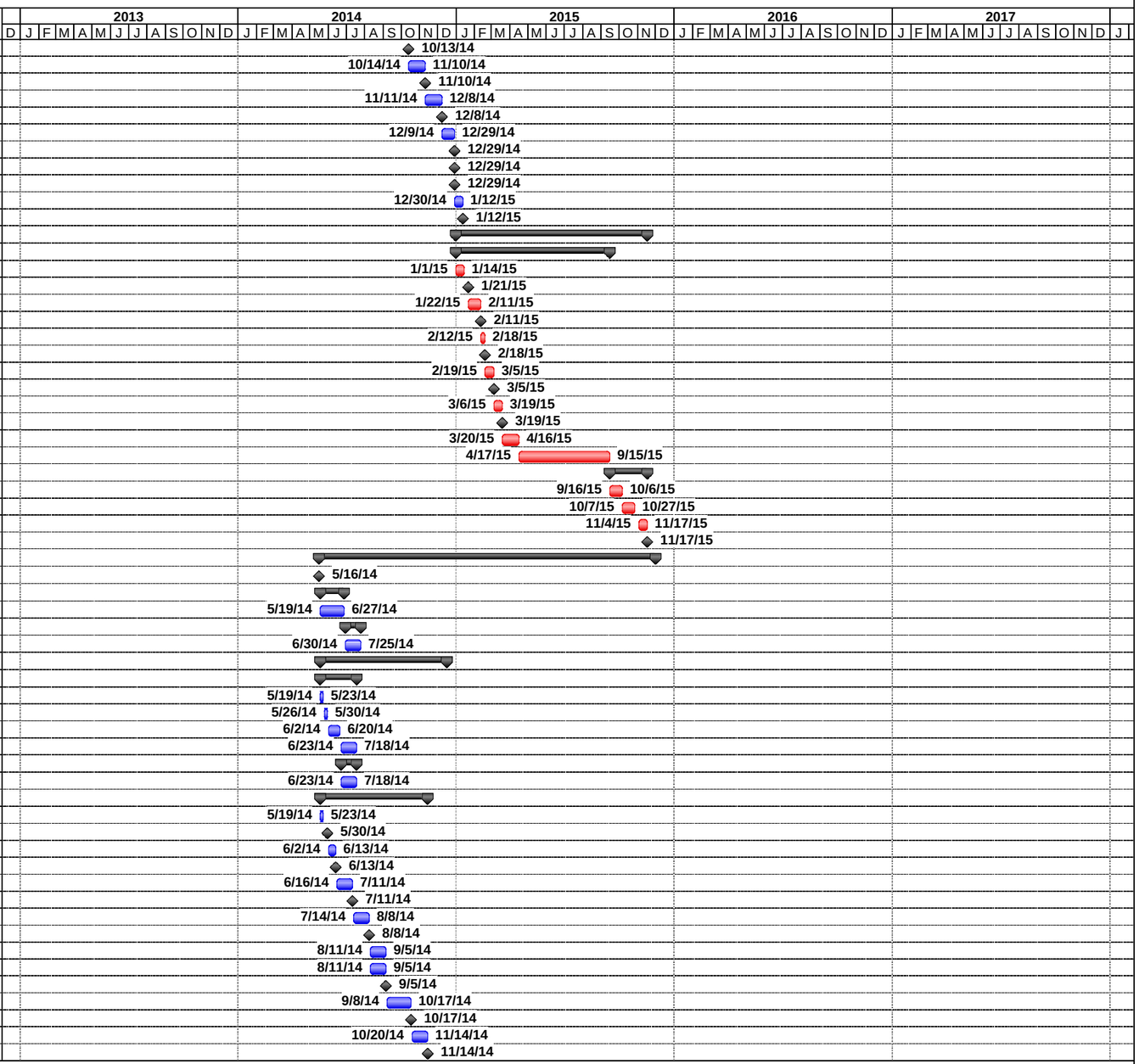

Project: US101 Gloria Road Interchang
Date: Thu 5/12/11

Task | Task Progress | Critical Task | Critical Task Progress | Milestone | Summary | Rolled Up Task | Rolled Up Critical Task | Rolled Up Milestone | Rolled Up Progress | Split | External Tasks | Project Summary | Group By Summary | Deadline

US 101 GLORIA ROAD INTERCHANGE IMPROVEMENT PROJECT

PA/ED & FINAL DESIGN SCHEDULE

ID	Task Name	Start	Finish	Duration
299	**Foundation Report**	**Mon 5/19/14**	**Fri 11/14/14**	**130 days**
300	Prepare Boring Locations	Mon 5/19/14	Fri 5/23/14	5 days
301	Submit Boring Locations to CT	Fri 5/30/14	Fri 5/30/14	0 days
302	CT Review Boring Locations	Mon 6/2/14	Fri 6/13/14	10 days
303	CT Approves Boring Locations	Fri 6/13/14	Fri 6/13/14	0 days
304	Field Explorations	Mon 6/16/14	Fri 7/11/14	20 days
305	Complete Field Explorations	Fri 7/11/14	Fri 7/11/14	0 days
306	Lab Analysis	Mon 7/14/14	Fri 8/8/14	20 days
307	Lab Work Completed	Fri 8/8/14	Fri 8/8/14	0 days
308	Prepare Foundation Report	Mon 8/11/14	Fri 9/5/14	20 days
309	Submit Draft Foundation to CT	Fri 9/5/14	Fri 9/5/14	0 days
310	CT Review Draft Foundation Report	Mon 9/8/14	Fri 10/17/14	30 days
311	CT Completes Draft Foundation Report	Fri 10/17/14	Fri 10/17/14	0 days
312	Update Foundation Report	Mon 10/20/14	Fri 11/14/14	20 days
313	Submit Final Foundatioon Report	Fri 11/14/14	Fri 11/14/14	0 days
314	**Bridge Type Selection Report**	**Mon 5/19/14**	**Tue 12/16/14**	**152 days**
315	Site Surveys	Mon 5/19/14	Tue 5/20/14	2 days
316	Type Selection/Falsework Requirements	Fri 8/8/14	Thu 8/21/14	10 days
317	Submit Draft Type Selection Report	Thu 8/21/14	Thu 8/21/14	0 days
318	Caltrans Review Draft TS Report	Mon 8/25/14	Fri 9/12/14	15 days
319	Conduct Type Selection Meeting	Mon 9/22/14	Mon 9/22/14	0 days
320	Update Type Selection Report and Seismic Strategy	Tue 9/23/14	Mon 11/3/14	30 days
321	Conduct Type Selection/Seismic Strategy Meeting	Tue 11/4/14	Tue 11/4/14	1 day
322	Update Bridge General Plan	Wed 11/5/14	Tue 12/2/14	20 days
323	Submit Final Bridge General Plan	Tue 12/2/14	Tue 12/2/14	0 days
324	Caltrans Approve Final GP	Tue 12/16/14	Tue 12/16/14	0 days
325	**ADL Investigation Report**	**Mon 5/19/14**	**Fri 11/14/14**	**130 days**
326	Prepare Sampling Plan	Mon 5/19/14	Fri 5/23/14	5 days
327	Submit Sampling Plan to CT	Fri 5/30/14	Fri 5/30/14	0 days
328	CT Review Sampling Plan	Mon 6/2/14	Fri 6/13/14	10 days
329	CT Approves Sampling Plan	Fri 6/13/14	Fri 6/13/14	0 days
330	Field Explorations	Mon 6/16/14	Fri 7/11/14	20 days
331	Complete Field Explorations	Fri 7/11/14	Fri 7/11/14	0 days
332	Lab Analysis	Mon 7/14/14	Fri 8/8/14	20 days
333	Lab Work Completed	Fri 8/8/14	Fri 8/8/14	0 days
334	Prepare ADL Report	Mon 8/11/14	Fri 9/5/14	20 days
335	Submit Draft ADL to CT	Fri 9/5/14	Fri 9/5/14	0 days
336	CT Review Draft ADL Report	Mon 9/8/14	Fri 10/17/14	30 days
337	CT Completes Draft ADL Report	Fri 10/17/14	Fri 10/17/14	0 days
338	Update ADL Report	Mon 10/20/14	Fri 11/14/14	20 days
339	Submit Final ADL Report	Fri 11/14/14	Fri 11/14/14	0 days
340	**Phase II Hazardous Waste Investigation Report**	**Mon 5/19/14**	**Fri 11/21/14**	**135 days**
341	Prepare Sampling Plan	Mon 5/19/14	Fri 5/23/14	5 days
342	Submit Sampling Plan to CT	Fri 5/30/14	Fri 5/30/14	0 days
343	CT Review Sampling Plan	Mon 6/2/14	Fri 6/13/14	10 days
344	CT Approves Sampling Plan	Fri 6/13/14	Fri 6/13/14	0 days
345	Field Explorations	Mon 6/16/14	Fri 7/4/14	15 days
346	Complete Field Explorations	Fri 7/4/14	Fri 7/4/14	0 days
347	Lab Analysis	Mon 7/7/14	Fri 8/1/14	20 days
348	Lab Work Completed	Fri 8/1/14	Fri 8/1/14	0 days
349	Prepare Phase 2 Haz Mat Investigation Report	Mon 8/4/14	Fri 9/12/14	30 days
350	Submit Draft Phase 2 Haz Mat Investigation Report to CT	Fri 9/12/14	Fri 9/12/14	0 days
351	CT Review Draft Phase 2 Haz Mat Investigation Report	Mon 9/15/14	Fri 10/24/14	30 days
352	CT Completes Draft Phase 2 Haz Mat Investigation Report	Fri 10/24/14	Fri 10/24/14	0 days
353	Update Phase 2 Haz Mat Investigation Report	Mon 10/27/14	Fri 11/21/14	20 days
354	Submit Final Phase 2 Haz Mat Investigation ReportReport	Fri 11/21/14	Fri 11/21/14	0 days
355	**PS&E**	**Mon 6/30/14**	**Fri 11/13/15**	**360 days**
356	**Prepare 65% PS&E**	**Mon 6/30/14**	**Fri 1/16/15**	**145 days**
357	**65% Roadway Plans**	**Mon 6/30/14**	**Fri 10/31/14**	**90 days**
358	Title Sheet	Mon 6/30/14	Tue 7/1/14	2 days

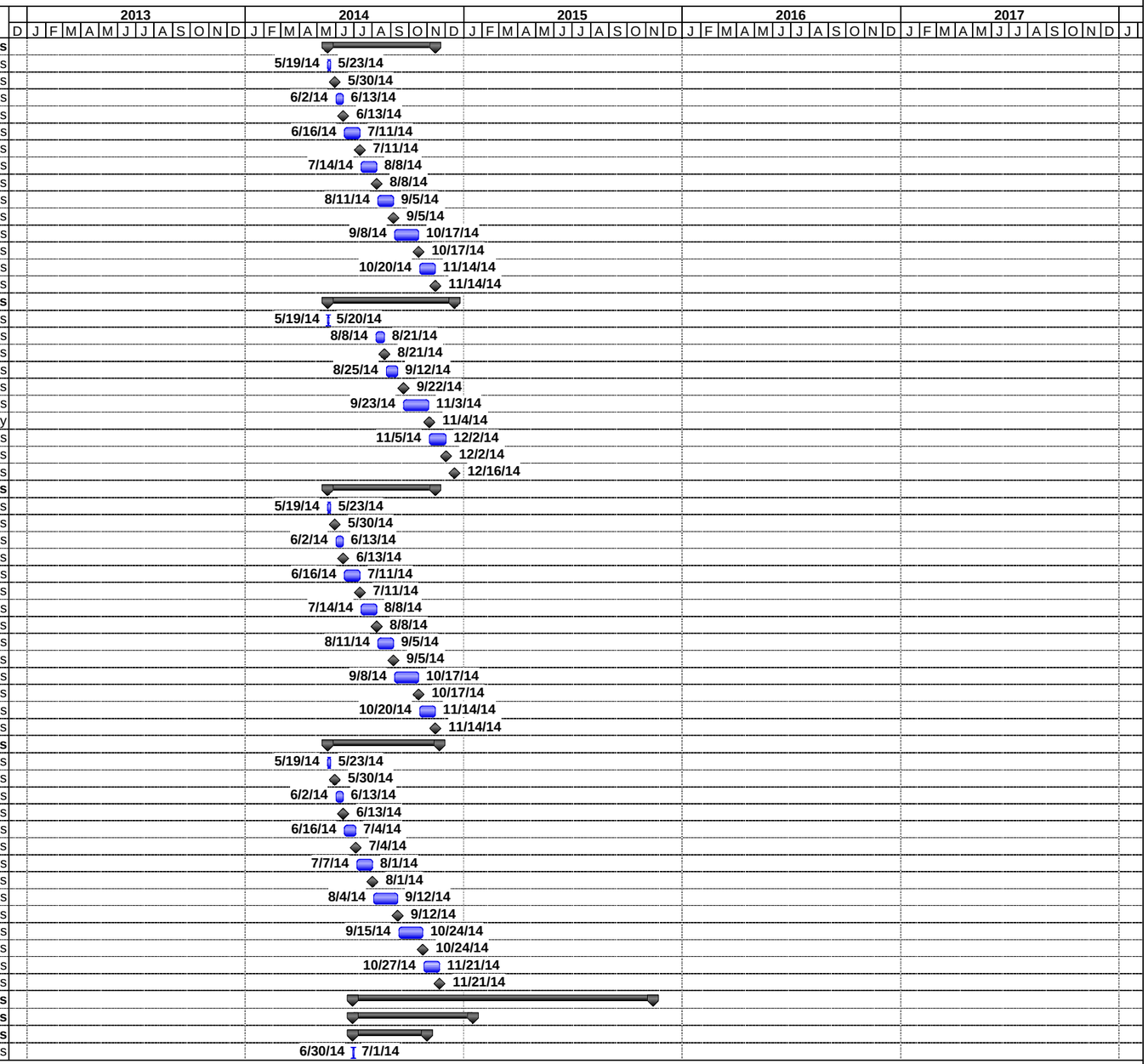

Project: US101 Gloria Road Interchang
Date: Thu 5/12/11

Task | Task Progress | Critical Task | Critical Task Progress | Milestone | Summary | Rolled Up Task | Rolled Up Critical Task | Rolled Up Milestone | Rolled Up Progress | Split | External Tasks | Project Summary | Group By Summary | Deadline

US 101 GLORIA ROAD INTERCHANGE IMPROVEMENT PROJECT

PA/ED & FINAL DESIGN SCHEDULE

ID	Task Name	Start	Finish	Duration
359	Typical Cross Sections	Mon 8/18/14	Fri 9/5/14	15 days
360	Key Map	Mon 6/30/14	Tue 7/1/14	2 days
361	Layout	Mon 6/30/14	Fri 8/8/14	30 days
362	Profile/Superelevation	Mon 7/28/14	Fri 8/22/14	20 days
363	Construction Details/Grading	Mon 8/4/14	Fri 9/12/14	30 days
364	Drainage Plan	Mon 8/11/14	Fri 9/19/14	30 days
365	Utility Plans/Details	Mon 9/15/14	Fri 10/10/14	20 days
366	Stage Construction/Traffic Handling	Mon 9/1/14	Fri 10/17/14	35 days
367	Detour/Construction Signs	Mon 9/1/14	Fri 9/19/14	15 days
368	Pavement Delineation/Signs	Mon 8/11/14	Fri 8/15/14	5 days
369	Summary of Quantities	Mon 10/20/14	Fri 10/31/14	10 days
370	Highway Planting	Mon 8/11/14	Fri 9/19/14	30 days
371	Signal/Lighting	Mon 8/11/14	Fri 9/19/14	30 days
372	**65% Submittal Process**	**Mon 11/3/14**	**Fri 1/16/15**	**55 days**
373	Prepare SSP's	Mon 11/3/14	Fri 11/28/14	20 days
374	Package 65% PS&E Submittal	Mon 12/1/14	Fri 12/5/14	5 days
375	Submit 65% PS&E to CT	Fri 12/5/14	Fri 12/5/14	0 days
376	Caltrans Review 65% PS&E	Mon 12/8/14	Fri 1/16/15	30 days
377	Caltrans Submit Comments/65% PS&E	Fri 1/16/15	Fri 1/16/15	0 days
378	**Prepare 95% PS&E**	**Mon 1/19/15**	**Fri 6/19/15**	**110 days**
379	Update Roadway Plans	Mon 1/19/15	Fri 4/10/15	60 days
380	Input for SSP's and BEE's	Mon 4/13/15	Fri 5/8/15	20 days
381	Update Final PS&E Report/Materials Handout	Mon 4/20/15	Fri 5/8/15	15 days
382	Submit 95% PS&E	Fri 5/8/15	Fri 5/8/15	0 days
383	CT Review 95% PS&E	Mon 5/11/15	Fri 6/19/15	30 days
384	CT Completes 95% Review	Fri 6/19/15	Fri 6/19/15	0 days
385	**Final PS&E Process**	**Mon 6/22/15**	**Fri 11/13/15**	**105 days**
386	Update PS&E for Final	Mon 6/22/15	Fri 8/21/15	45 days
387	Submit Final PS&E for Permit	Fri 8/21/15	Fri 8/21/15	0 days
388	CT Final Review	Mon 8/24/15	Fri 10/2/15	30 days
389	Update PS&E	Mon 10/5/15	Fri 10/16/15	10 days
390	PS&E Ready for Bid	Fri 10/16/15	Fri 10/16/15	0 days
391	Caltrans Permit Processing	Mon 10/19/15	Fri 11/13/15	20 days
392	Caltrans Issues Encr. Permit	Fri 11/13/15	Fri 11/13/15	0 days
393	**Right of Way Certification**	**Mon 12/8/14**	**Tue 12/1/15**	**257 days**
394	Prepare R/W Sufficiency Certificate	Mon 12/8/14	Tue 1/6/15	22 days
395	Submit R/W Sufficiency Certificate	Tue 1/6/15	Tue 1/6/15	0 days
396	Caltrans Reviews R/W Sufficiency Certificate	Wed 1/7/15	Tue 2/3/15	20 days
397	Caltrans Approves R/W Sufficiency Certificate	Tue 2/3/15	Tue 2/3/15	0 days
398	Prepare R/W Certification	Wed 11/4/15	Tue 11/17/15	10 days
399	Submit R/W Certification to Caltrans	Tue 11/17/15	Tue 11/17/15	0 wks
400	Caltrans Review R/W Certification	Wed 11/18/15	Tue 12/1/15	10 days
401	Caltrans Approves R/W Certification	Tue 12/1/15	Tue 12/1/15	0 wks
402	**BIDDING & CONSTRUCTION**	**Wed 11/18/15**	**Tue 10/24/17**	**505 days**
403	City Prepare Bid Document	Wed 11/18/15	Tue 12/1/15	10 days
404	Advertise Date	Tue 12/1/15	Tue 12/1/15	0 days
405	Bidding period	Wed 12/2/15	Tue 1/12/16	30 days
406	Bid Opening Date	Tue 1/12/16	Tue 1/12/16	0 days
407	Contract Award	Tue 2/2/16	Tue 2/2/16	0 days
408	Start Construction	Tue 2/16/16	Tue 2/16/16	0 days
409	Construction	Wed 2/17/16	Tue 10/24/17	440 days
410	End Construction	Tue 10/24/17	Tue 10/24/17	0 days

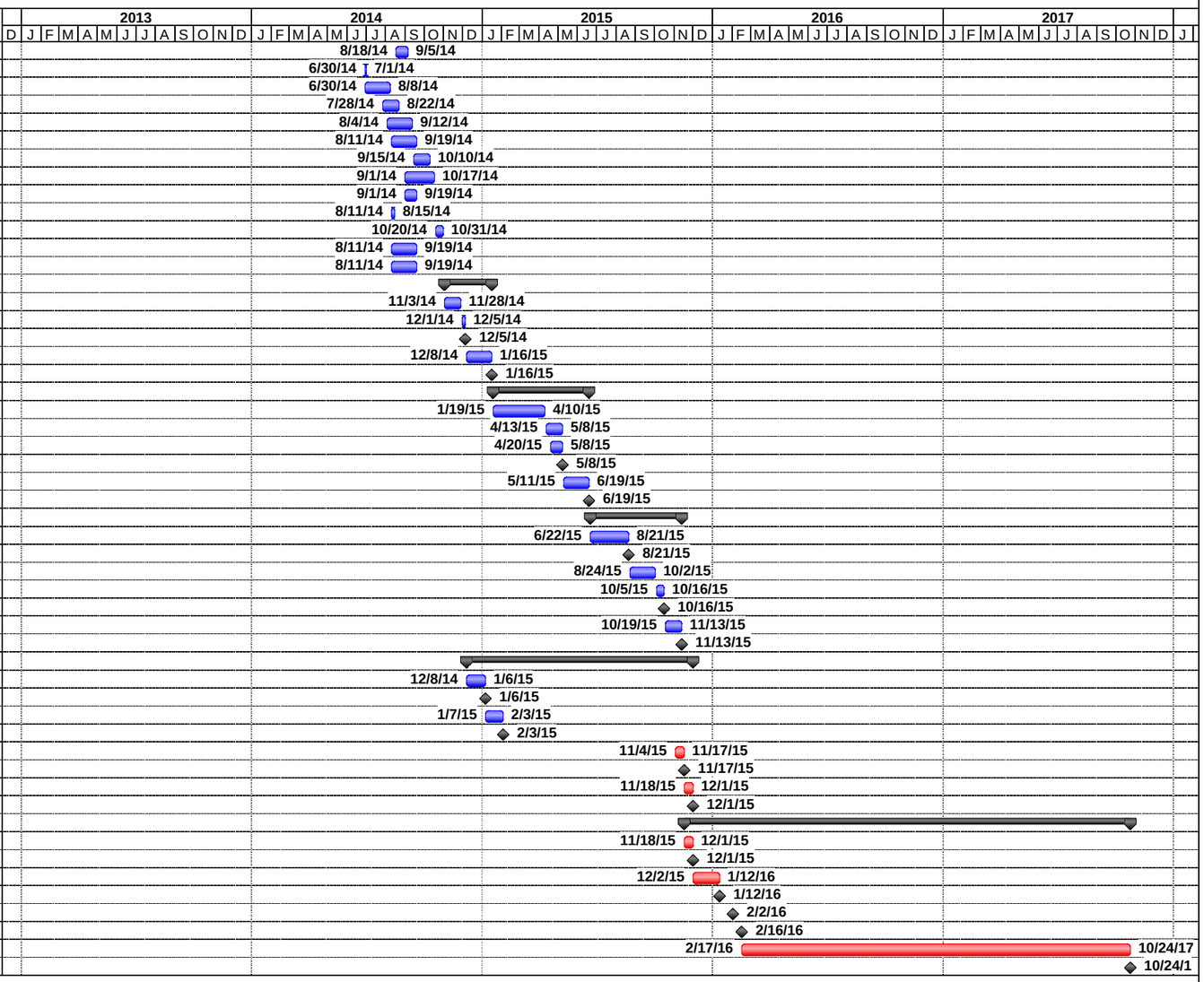

Project: US101 Gloria Road Interchang
Date: Thu 5/12/11

Task | Task Progress | Critical Task | Critical Task Progress | Milestone | Summary | Rolled Up Task | Rolled Up Critical Task | Rolled Up Milestone | Rolled Up Progress | Split | External Tasks | Project Summary | Group By Summary | Deadline

Attachment C: PEAR Environmental Commitments Cost Estimate

Standard PSR Only

(Prepare a separate form for each viable alternative described in the Project Study Report)

PART 1 PROJECT INFORMATION ***rev. 11/08***

District County Route Post Mile ***05-Mon-101-68.4/70.4***	***EA:*** ***05-0P930K***
Project Description: ***The project would reconstruct the US101 Gloria Road Interchange in the City of Gonzales, in Monterey County.***	
Form completed by (Name/District Office) ***Daniel Ho/Mark Thomas & Company***	
Project manager: ***Dave Rasmussen***	***Phone Number:*** ***805-549-3677***
Date: 02/21/2011	

PART 2 PERMITS AND AGREEMENTS

	Permits and Agreements ($$)
☒***Fish and Game 1602 Agreement***	***2***
☐***Coastal Development Permit***	
☐***State Lands Agreement***	
☒***Section 401 Water Quality Certification***	***2***
☒***Section 404 Permit – Nationwide (U.S. Army Corps)***	***2***
☐***Section 404 Permit – Individual (U.S. Army Corps)***	
☐***Section 10 Navigable Waters Permit (U.S. Army Corps)***	
☐***Section 9 Permit (U.S. Coast Guard)***	
☐***Other:***	
Total (enter zeros if no cost)	***6***

PART 3. ENVIRONMENTAL COMMITMENTS FOR PERMANENT IMPACTS

To complete the following information:

- **Report costs in $1,000s.**
- **Include all costs to complete the commitment:**
  - **Capital outlay and staff support. Refer to Estimated Resources by WBS Code. For example, if you estimated 80 ho7urs for biological monitoring (WBS 235.34 Long Term Mitigation Monitoring), convert those hours to a dollar amount for this entry. For current conversion rates from PY to dollars, see the Project Manager.**
  - **Cost of right of way or easements.**
  - **If compensatory mitigation is anticipating (for wetlands for example), insert a range for purchasing credits in a mitigation bank.**
  - **Long-term monitoring and reporting**
  - **Any follow-up maintenance**
  - **Use current costs; the Project Manager will add an appropriate escalation factor.**
  - **This is an estimating tool, so a range is not only acceptable, but advisable.**

Environmental Commitments Alternative I		
Noise abatement or mitigation	**0**	**I**
Special landscaping	**0**	
Archaeological resources	**0**	
Biological resources	**0**	
Historical resources	**0**	
Scenic resources	**0**	
Wetland/riparian resources	**262**	**On-site mitigation**
Res./bus. Relocations		
Other:		
Total (enter zeros of no cost)		

ATTACHMENT I

Storm Water Data Report
(Cover Page Only)

Dist-County-Route: **05 - MON – 101**
Post Mile Limits: **68.4/70.4**
Project Type: **INTERCHANGE IMPROVEMENT**
Project ID (or EA): **05-0002-0223-K (05-0P930K)**
Program Identification: **111**
Phase: ☒ PID ☐ PA/ED ☐ PS&E

Regional Water Quality Control Board(s): **RWQCB- Central Coast, Region 3**

Is the Project required to consider Treatment BMPs? Yes ☒ No ☐
If yes, can Treatment BMPs be incorporated into the project? Yes ☒ No ☐
If No, a Technical Data Report must be submitted to the RWQCB at least 30 days prior to the projects RTL date. List RTL Date:

Total Disturbed Soil Area: **37.7 AC** Risk Level: **2**
Estimated: Construction Start Date: **7/14/2014** Construction Completion Date: **12/15/2015**
Notification of Construction (NOC) Date to be submitted: **1/4/2016**

Erosivity Waiver	Yes ☐	Date:	No ☒
Notification of ADL reuse (if Yes, provide date)	Yes ☐	Date:	No ☒
Separate Dewatering Permit (if yes, permit number)	Yes ☐	Permit #	No ☒

This Report has been prepared under the direction of the following Licensed Person. The Licensed Person attests to the technical information contained herein and the date upon which recommendations, conclusions, and decisions are based. Professional Engineer or Landscape Architect stamp required at PS&E.

Daniel Ho, P.E. — Date: 4/22/2011

I have reviewed the stormwater quality design issues and find this report to be complete, current and accurate:

Dave Rasmussen, *Project Manager* — Date: 5/12/11

Jon Wood, *Designated Maintenance Representative* — Date: 5/16/11

Dennis Reeves, *Designated Landscape Architect Representative* — Date: 5/11/2011

[Stamp Required for PS&E only] **Marissa Nishikawa** ~~*District/Regional Design SW Coordinator or Designee*~~ FOR — Date: 5/18/2011

ATTACHMENT J

Risk Management Plan Risk Register

Project Risk Register

DIST- EA	0P930K	Project Name:	US 101/Gloria Road Interchange Project	Project Manager:	Carlos Lopez (City)/ David Rasmussen (Caltrans)	Date Created:	Last Updated:
		Co - Rte - PM:	Mon - 101 - 68.4/70.4	Telephone:	City (831) 675-4205/ Caltrans (805) 549-3677	12/08/08	04/29/11

ITEM	ID #	Status	Threat / Opportunity	Category	Date Risk Identified	Risk Discription	Root Causes	Primary Objective	Overall Risk Rating	Cost/Time Impact Value	Risk Owner	Risk Trigger	Strategy	Response Actions w/ Pros & Cons	Adjusted Cost/Time Impact Value	WBS Item	Status Date and Review Comments
	(a)	(b)	(c)	(d)	(e)	(f)	(g)	(h)	i)	(j)	(k)	(l)	(m)	(n)	(o)	(p)	(q)
1	0P930K-01	Active	Threat	ORG	12/08/08	Capital funding Shortfall	Funding	TIME	Probablility 4=High (40-59%) High Impact 8 =High	24 months	Carlos Lopez (831) 675-4205 clopez@ci.gonzales.ca.us	List of other viable projects for local and STIP funding is getting long	MITIGATE	Keep Track of Funding Submittal Date; Identify other potential funding sources		165 PERFORM ENVIRONMENTAL STUDIES AND PREPARE DRAFT ENVIRONMENTAL DOCUMENT	
1	0P930K-02	Active	Threat	R/W	12/08/08	Landowner unwilling to sell	Performamnnce and Reliability	TIME	Probablility 3=Med (20-39%) Med Impact 4 =Med	6 months	Carlos Lopez (831) 675-4205 clopez@ci.gonzales.ca.us	R/W negotiation is taking longer than normal.	MITIGATE	Research comparables within the area in order that offer price for property is attractive		225 OBTAIN RIGHT OF WAY INTERESTS FOR PROJECT RIGHT OF WAY CERTIFICATION	
1	0P930K-03	Active	Threat	ENV	12/08/08	Endandered Species and contamination present	Performamnnce and Reliability	SCOPE	Probablility 3=Med (20-39%) Med Impact	3 months	Carlos Lopez (831) 675-4205 clopez@ci.gonzales.ca.us	Perform field tests and determination early	MITIGATE	Provide contigency fund for mitigation and additional project time		165 PERFORM ENVIRONMENTAL STUDIES AND PREPARE DRAFT ENVIRONMENTAL DOCUMENT	
1	0P930K-04	Active	Threat	ENV	04/29/11	Potential burials in cemetery parcel	Performamnnce and Reliability	TIME	Probablility Med Impact	3 months	Carlos Lopez (831) 675-4205 clopez@ci.gonzales.ca.us	Conduct investigation early	MITIGATE	Provide contigency fund for mitigation and additional project time		165 PERFORM ENVIRONMENTAL STUDIES AND PREPARE DRAFT ENVIRONMENTAL DOCUMENT	

Approved by:_____
date

ATTACHMENT K

Draft Cooperative Agreement

COOPERATIVE AGREEMENT

This agreement, effective on _____, is between the State of California, acting through its Department of Transportation, referred to as CALTRANS, and:

City of Gonzales, a body politic and municipal corporation or chartered city of the State of California, referred to as CITY.

For the purpose of this agreement, the term PARTNERS collectively refers to CALTRANS and CITY (all signatory parties to this agreement). The term PARTNER refers to any one of those signatory parties individually.

RECITALS

1. California Streets and Highways Code sections 114 and 130 authorize PARTNERS to enter into a cooperative agreement for performance of work within the State Highway System (SHS) right of way.

2. This agreement outlines the terms and conditions of cooperation between PARTNERS to obtain Project Approval and environmental documentation (PA&ED) for reconstructing the existing US 101 Gloria Road interchange in the City of Gonzales.

   For the purpose of this agreement, reconstructing the existing US 101/Gloria Road interchange in the City of Gonzales will be referred to as PROJECT. All responsibilities assigned in this agreement to obtain Project Approval and environmental documentation (PA&ED) will be referred to as OBLIGATIONS.

3. There are no prior PROJECT-related cooperative agreements.

4. Prior to this agreement, CITY developed the Project Initiation Document.

5. The estimated date for OBLIGATION COMPLETION is December 1, 2016.

6. In this agreement capitalized words represent defined terms and acronyms. The Definitions section contains a complete definition for each capitalized term.

7. From this point forward, PARTNERS define in this agreement the terms and conditions under which they will accomplish OBLIGATIONS.

RESPONSIBILITIES

8. CITY is SPONSOR for 100% of PROJECT.

9. CALTRANS will provide IQA for the portions of WORK within existing and proposed SHS right of way. CALTRANS retains the right to reject noncompliant WORK, protect public safety, preserve property rights, and ensure that all WORK is in the best interest of the SHS.

10. CITY may provide IQA for the portions of WORK outside existing and proposed SHS right of way.

11. CITY is the only FUNDING PARTNER for this agreement. CITY's funding commitment is defined in the FUNDING SUMMARY.

12. CALTRANS is the CEQA lead agency for PROJECT.

13. CALTRANS is the NEPA lead agency for PROJECT.

14. CITY is IMPLEMENTING AGENCY for PA&ED.

SCOPE

Scope: General

15. PARTNERS will perform all OBLIGATIONS in accordance with federal and California laws, regulations, and standards; FHWA STANDARDS; and CALTRANS STANDARDS.

16. IMPLEMENTING AGENCY for a PROJECT COMPONENT will provide a Quality Management Plan (QMP) for that component as part of the PROJECT MANAGEMENT PLAN.

17. Any PARTNER may, at its own expense, have representatives observe any OBLIGATIONS performed by another PARTNER. Observation does not constitute authority over those OBLIGATIONS.

18. Each PARTNER will ensure that all of its personnel participating in OBLIGATIONS are appropriately qualified, and if necessary licensed, to perform the tasks assigned to them.

19. PARTNERS will invite each other to participate in the selection and retention of any consultants who participate in OBLIGATIONS.

20. If WORK is done under contract (not completed by a PARTNER's own employees) and is governed by the California Labor Code's definition of "public works" (section 1720(a)(a)), that PARTNER will conform to sections 1720 – 1815 of the California Labor Code and all

applicable regulations and coverage determinations issued by the Director of Industrial Relations.

21. IMPLEMENTING AGENCY for each PROJECT COMPONENT included in this agreement will be available to help resolve problems generated by that component for the entire duration of PROJECT.

22. CALTRANS will issue, upon proper application, the encroachment permits required for WORK within SHS right of way.

    Contractors and/or agents, and utility owners will not perform WORK without an encroachment permit issued in their name.

23. If any PARTNER discovers unanticipated cultural, archaeological, paleontological, or other protected resources during WORK, all WORK in that area will stop and that PARTNER will notify all PARTNERS within 24 hours of discovery. WORK may only resume after a qualified professional has evaluated the nature and significance of the discovery and a plan is approved for its removal or protection.

24. PARTNERS will hold all administrative draft and administrative final reports, studies, materials, and documentation relied upon, produced, created, or utilized for PROJECT in confidence to the extent permitted by law. Where applicable, the provisions of California Government Code section 6254.5(e) will govern the disclosure of such documents in the event that PARTNERS share said documents with each other.

    PARTNERS will not distribute, release, or share said documents with anyone other than employees, agents, and consultants who require access to complete PROJECT without the written consent of the PARTNER authorized to release them, unless required or authorized to do so by law.

25. If any PARTNER receives a public records request, pertaining to OBLIGATIONS, that PARTNER will notify PARTNERS within five (5) working days of receipt and make PARTNERS aware of any disclosed public records. PARTNERS will consult with each other prior to the release of any public documents related to the PROJECT.

26. If HM-1 or HM-2 is found during a PROJECT COMPONENT, IMPLEMENTING AGENCY for that PROJECT COMPONENT will immediately notify PARTNERS.

27. CALTRANS, independent of PROJECT, is responsible for any HM-1 found within the existing SHS right of way. CALTRANS will undertake HM MANAGEMENT ACTIVITIES related to HM-1 with minimum impact to PROJECT schedule.

28. CITY, independent of PROJECT, is responsible for any HM-1 found within PROJECT limits and outside the existing SHS right of way. CITY will undertake or cause to be undertaken HM MANAGEMENT ACTIVITIES related to HM-1 with minimum impact to PROJECT schedule.

29. If HM-2 is found within PROJECT limits, the public agency responsible for the advertisement, award, and administration (AAA) of the PROJECT construction contract will be responsible for HM MANAGEMENT ACTIVITIES related to HM-2.

30. CALTRANS' acquisition or acceptance of title to any property on which any HM-1 or HM-2 is found will proceed in accordance with CALTRANS' policy on such acquisition.

31. PARTNERS will comply with all of the commitments and conditions set forth in the environmental documentation, environmental permits, approvals, and applicable agreements as those commitments and conditions apply to each PARTNER's responsibilities in this agreement.

32. IMPLEMENTING AGENCY for each PROJECT COMPONENT will furnish PARTNERS with written quarterly progress reports during the implementation of OBLIGATIONS in that component.

33. Upon OBLIGATION COMPLETION, ownership or title to all materials and equipment constructed or installed for the operations and/or maintenance of the SHS within SHS right of way as part of WORK become the property of CALTRANS.

    CALTRANS will not accept ownership or title to any materials or equipment constructed or installed outside SHS right of way.

34. IMPLEMENTING AGENCY for a PROJECT COMPONENT will accept, reject, compromise, settle, or litigate claims of any non-agreement parties hired to do WORK in that component.

35. PARTNERS will confer on any claim that may affect OBLIGATIONS or PARTNERS' liability or responsibility under this agreement in order to retain resolution possibilities for potential future claims. No PARTNER will prejudice the rights of another PARTNER until after PARTNERS confer on claim.

36. PARTNERS will maintain, and will ensure that any party hired by PARTNERS to participate in OBLIGATIONS will maintain, a financial management system that conforms to Generally Accepted Accounting Principles (GAAP), and that can properly accumulate and segregate incurred PROJECT costs, and provide billing and payment support.

37. PARTNERS will comply with the appropriate federal cost principles and administrative requirements outlined in the Applicable Cost Principles and Administrative Requirements table below. These principles and requirements apply to all funding types included in this agreement.

Applicable Cost Principles and Administration Requirements

The federal cost principles and administrative requirements associated with each organization type apply to that organization.		
Organization Type	**Cost Principles**	**Administrative Requirements**
Federal Governments	2 CFR Part 225	OMB A-102
State and Local Government	2 CFR, Part 225	49 CFR, Part 18
Educational Institutions	2 CFR, Part 220	2 CFR, Part 215
Non-Profit Organizations	2 CFR, Part 230	2 CFR, Part 215
For Profit Organizations	48 CFR, Chapter 1, Part 31	49 CFR, Part 18
CFR (Code of Federal Regulations) **OMB (Office of Management and Budget)**		
Related URLs: • Various OMB Circular: http://www.whitehouse.gov/omb/grants_circulars • Code of Federal Regulations: http://www.gpoaccess.gov/CFR		

38. PARTNERS will maintain and make available to each other all OBLIGATIONS-related documents, including financial data, during the term of this agreement.

39. PARTNERS will retain all OBLIGATIONS-related records for three (3) years after the final voucher.

40. PARTNERS have the right to audit each other in accordance with generally accepted governmental audit standards.

    CALTRANS, the state auditor, FHWA, and CITY will have access to all OBLIGATIONS-related records of each PARTNER, and any party hired by a PARTNER to participate in OBLIGATIONS, for audit, examination, excerpt, or transcription.

    The examination of any records will take place in the offices and locations where said records are generated and/or stored and will be accomplished during reasonable hours of operation. The auditing PARTNER will be permitted to make copies of any OBLIGATIONS-related records needed for the audit.

    The audited PARTNER will review the draft audit, findings, and recommendations, and provide written comments within 30 calendar days of receipt.

    Upon completion of the final audit, PARTNERS have 30 days to refund or invoice as necessary in order to satisfy the obligation of the audit.

    Any audit dispute not resolved by PARTNERS is subject to dispute resolution. Any costs arising out of the dispute resolution process will be paid within 30 calendar days of the final audit or dispute resolution findings.

41. Any PARTNER that hires another party to participate in OBLIGATIONS will conduct a pre-award audit of that party in accordance with the *Local Assistance Procedures Manual*.

42. PARTNERS will not incur costs beyond the funding commitments in this agreement. If IMPLEMENTING AGENCY anticipates that funding for WORK will be insufficient to complete WORK, IMPLEMENTING AGENCY will promptly notify SPONSOR.

    IMPLEMENTING AGENCY has no obligation to perform WORK if funds to perform WORK are unavailable.

43. If WORK stops for any reason, IMPLEMENTING AGENCY will place all facilities impacted by WORK in a safe and operable condition acceptable to CALTRANS.

44. If WORK stops for any reason, each PARTNER will continue to implement all of its applicable commitments and conditions included in the PROJECT environmental documentation, permits, agreements, or approvals that are in effect at the time that WORK stops, as they apply to each PARTNER's responsibilities in this agreement, in order to keep PROJECT in environmental compliance until WORK resumes.

45. Each PARTNER accepts responsibility to complete the activities that it selected on the SCOPE SUMMARY. Activities marked with "N/A" on the SCOPE SUMMARY are not included in the scope of this agreement.

Scope: Environmental Permits, Approvals and Agreements

46. Each PARTNER identified in the Environmental Permits table below accepts the responsibility to complete the assigned activities.

Environmental Permits						
Permit	Coordinate	Prepare	Obtain	Implement	Renew	Amend
401 RWQCB	CITY	CITY	CITY	CITY	CITY	CITY
FESA Section 7 USFWS	CALTRANS	CITY	CALTRANS	CITY	CALTRANS	CALTRANS
1602 DFG	CITY	CITY	CITY	CITY	CITY	CITY

Scope: Project Approval and Environmental Document (PA&ED)

47. CALTRANS is the CEQA lead agency for PROJECT. CALTRANS will determine the type of environmental documentation required and will cause that documentation to be prepared.

48. Any PARTNER involved in the preparation of CEQA environmental documentation will follow the CALTRANS STANDARDS that apply to the CEQA process including, but not limited to, the guidance provided in the Standard Environmental Reference available at www.dot.ca.gov/ser.

49. Pursuant to SAFETEA-LU Section 6004 and/or 6005, CALTRANS is the NEPA lead agency for PROJECT. CALTRANS will assume responsibility for NEPA compliance and will prepare any needed NEPA environmental documentation or will cause that documentation to be prepared.

50. Any PARTNER involved in the preparation of NEPA environmental documentation will follow FHWA STANDARDS that apply to the NEPA process including, but not limited to, the guidance provided in the FHWA Environmental Guidebook available at www.fhwa.dot.gov/hep/index.htm.

51. CITY will prepare the appropriate CEQA environmental documentation to meet CEQA requirements.

52. CITY will prepare the appropriate NEPA environmental documentation to meet NEPA requirements.

53. Any PARTNER preparing any portion of the CEQA environmental documentation, including any studies and reports, will submit that portion of the documentation to the CEQA lead agency for review, comment, and approval at appropriate stages of development prior to public availability.

54. Any PARTNER preparing any portion of the NEPA environmental documentation (including, but not limited to, studies, reports, public notices, and public meeting materials, determinations, administrative drafts, and final environmental documents) will submit that portion of the documentation to CALTRANS for CALTRANS' review, comment, and approval prior to public availability.

55. CITY will prepare, publicize, and circulate all CEQA-related public notices and will submit said notices to the CEQA lead agency for review, comment, and approval prior to publication and circulation.

56. CITY will prepare, publicize, and circulate all NEPA-related public notices, except Federal Register notices. CITY will submit all notices to CALTRANS for CALTRANS' review, comment, and approval prior to publication and circulation.

    CALTRANS will work with the appropriate federal agency to publish notices in the Federal Register.

57. The CEQA lead agency will attend all CEQA-related public meetings.

58. CITY will plan, schedule, prepare materials for, and host all CEQA-related public meetings and will submit all materials to the CEQA lead agency for review, comment, and approval at least 10 working days prior to the public meeting date.

59. The NEPA lead agency will attend all NEPA-related public meetings.

60. CITY will plan, schedule, prepare materials for, and host all NEPA-related public meetings. CITY will submit all materials to CALTRANS for CALTRANS' review, comment, and approval at least 10 working days prior to the public meeting date.

61. If a PARTNER who is not the CEQA or NEPA lead agency holds a public meeting about PROJECT, that PARTNER must clearly state its role in PROJECT and the identity of the CEQA and NEPA lead agencies on all meeting publications. All meeting publications must also inform the attendees that public comments collected at the meetings are not part of the CEQA or NEPA public review process.

    That PARTNER will submit all meeting advertisements, agendas, exhibits, handouts, and materials to the appropriate lead agency for review, comment, and approval at least 10 working days prior to publication or use. If that PARTNER makes any changes to the materials, it will allow the appropriate lead agency to review, comment on, and approve those changes at least three (3) working days prior to the public meeting date.

    The CEQA lead agency maintains final editorial control with respect to text or graphics that could lead to public confusion over CEQA-related roles and responsibilities. The NEPA lead agency has final approval authority with respect to text or graphics that could lead to public confusion over NEPA-related roles and responsibilities.

62. The PARTNER preparing the environmental documentation, including the studies and reports, will ensure that qualified personnel remain available to help resolve environmental issues and perform any necessary work to ensure that PROJECT remains in environmental compliance.

COST

Cost: General

63. The cost of any awards, judgments, or settlements generated by OBLIGATIONS is an OBLIGATIONS COST.

64. CALTRANS, independent of PROJECT, will pay all costs for HM MANAGEMENT ACTIVITIES related to HM-1 found within the existing SHS right of way.

65. CITY, independent of PROJECT, will pay, or cause to be paid, all costs for HM MANAGEMENT ACTIVITIES related to HM-1 found within PROJECT limits and outside of the existing SHS right of way.

66. HM MANAGEMENT ACTIVITIES costs related to HM-2 are CONSTRUCTION SUPPORT and CONSTRUCTION CAPITAL costs.

67. The cost to comply with and implement the commitments set forth in the environmental documentation is an OBLIGATIONS COST.

68. The cost to ensure that PROJECT remains in environmental compliance is an OBLIGATIONS COST.

69. The cost of any legal challenges to the CEQA or NEPA environmental process or documentation is an OBLIGATIONS COST.

70. Independent of OBLIGATIONS COST, CALTRANS will fund the cost of its own IQA for WORK done within existing or proposed future SHS right of way.

71. Independent of OBLIGATIONS COST, CITY will fund the cost of its own IQA for WORK done outside existing or proposed future SHS right of way.

72. CALTRANS will provide encroachment permits to PARTNERS, their contractors, consultants and agents, at no cost.

73. Fines, interest, or penalties levied against a PARTNER will be paid, independent of OBLIGATIONS cost, by the PARTNER whose actions or lack of action caused the levy. That PARTNER will indemnify and defend each other PARTNER.

74. Travel, per diem, and third-party contract reimbursements are an OBLIGATIONS COST only after those hired by PARTNERS to participate in OBLIGATIONS incur and pay those costs.

    Payments for travel and per diem will not exceed the rates paid rank and file state employees under current California Department of Personnel Administration (DPA) rules current at the effective date of this agreement.

    If CITY invoices for rates in excess of DPA rates, CITY will fund the cost difference and reimburse CALTRANS for any overpayment.

75. The cost of any engineering support performed by CALTRANS includes all direct and applicable indirect costs. CALTRANS calculates indirect costs based solely on the type of funds used to pay support costs. State and federal funds are subject the current Program Functional Rate. Local funds are subject to the current Program Functional Rate and the current Administration Rate. Caltrans periodically adjusts the Program Functional Rate and the Administration Rate.

76. If CALTRANS reimburses CITY for any costs later determined to be unallowable, CITY will reimburse those funds.

77. The cost to place PROJECT right of way in a safe and operable condition and meet all environmental commitments is an OBLIGATIONS cost.

78. Because IMPLEMENTING AGENCY is responsible for managing the scope, cost, and schedule of a project component, if there are insufficient funds available in this agreement to place the right of way in a safe and operable condition, the appropriate IMPLEMENTING AGENCY accepts responsibility to fund these activities until such time as PARTNERS amend this agreement.

    That IMPLEMENTING AGENCY may request reimbursement for these costs during the amendment process.

79. If there are insufficient funds in this agreement to implement applicable commitments and conditions included in the PROJECT environmental documentation, permits, agreements, and/or approvals that are in effect at a time that WORK stops, each PARTNER implementing commitments or conditions accepts responsibility to fund these activities, as they apply to each PARTNER's responsibilities, until such time are PARTNERS amend this agreement.

    Each PARTNER may request reimbursement for these costs during the amendment process.

80. PARTNERS will pay invoices within 30 calendar days of receipt of invoice.

Cost: Environmental Permits, Approvals and Agreements

81. The cost of coordinating, obtaining, complying with, implementing, and if necessary renewing and amending resource agency permits, agreements, and/or approvals is an OBLIGATIONS COST.

Cost: Project Approval and Environmental Document (PA&ED)

82. The cost to prepare, publicize, and circulate all CEQA and NEPA-related public notices is an OBLIGATIONS COST.

83. The cost to plan, schedule, prepare, materials for, and host all CEQA and NEPA-related public hearings is an OBLIGATIONS COST.

84. Each PARTNER listed below may submit invoices for PA&ED:
    - CALTRANS may invoice CITY

85. PARTNERS will exchange funds for actual costs.

    CALTRANS will invoice CITY for a $1,000 initial deposit upon execution of this agreement. This deposit represents two (2) months' estimated support costs.

    Thereafter, CALTRANS will submit to CITY monthly invoices for estimated monthly costs based on the prior month's actual expenditures.

After PARTNERS agree that all WORK is complete, CALTRANS will submit a final accounting for all OBLIGATIONS COSTs. Based on the final accounting, PARTNERS will refund or invoice as necessary in order to satisfy the financial commitments of this agreement.

SCHEDULE

86. PARTNERS will manage the schedule for OBLIGATIONS through the work plan included in the PROJECT MANAGEMENT PLAN.

GENERAL CONDITIONS

87. PARTNERS understand that this agreement is in accordance with and governed by the Constitution and laws of the State of California. This agreement will be enforceable in the State of California. Any PARTNER initiating legal action arising from this agreement will file and maintain that legal action in the Superior Court of the county in which the CALTRANS district office that is signatory to this agreement resides, or in the Superior Court of the county in which PROJECT is physically located.

88. All OBLIGATIONS of CALTRANS under the terms of this agreement are subject to the appropriation of resources by the Legislature, the State Budget Act authority, and the allocation of funds by the California Transportation Commission.

89. Any PARTNER performing IQA does so for its own benefit. No one can assign liability to that PARTNER due to its IQA activities.

90. Neither CITY nor any officer or employee thereof is responsible for any injury, damage or liability occurring by reason of anything done or omitted to be done by CALTRANS and/or its agents under or in connection with any work, authority, or jurisdiction conferred upon CALTRANS under this agreement.

    It is understood and agreed that CALTRANS and/or its agents will fully defend, indemnify, and save harmless CITY and all of its officers and employees from all claims, suits, or actions of every name, kind, and description brought forth under, but not limited to, tortious, contractual, inverse condemnation, or other theories or assertions of liability occurring by reason of anything done or omitted to be done by CALTRANS and/or its agents under this agreement.

91. Neither CALTRANS nor any officer or employee thereof is responsible for any injury, damage, or liability occurring by reason of anything done or omitted to be done by CITY and/or its agents under or in connection with any work, authority, or jurisdiction conferred upon CITY under this agreement.

    It is understood and agreed that CITY and/or its agents will fully defend, indemnify, and save harmless CALTRANS and all of its officers and employees from all claims, suits, or actions of every name, kind, and description brought forth under, but not limited to, tortious, contractual, inverse condemnation, or other theories or assertions of liability occurring by reason of anything done or omitted to be done by CITY and/or its agents under this agreement.

92. PARTNERS do not intend this agreement to create a third party beneficiary or define duties, obligations, or rights in parties not signatory to this agreement. PARTNERS do not intend this agreement to affect their legal liability by imposing any standard of care for fulfilling OBLIGATIONS different from the standards imposed by law.

93. PARTNERS will not assign or attempt to assign OBLIGATIONS to parties not signatory to this agreement.

94. PARTNERS will not interpret any ambiguity contained in this agreement against each other. PARTNERS waive the provisions of California Civil Code section 1654.

95. A waiver of a PARTNER's performance under this agreement will not constitute a continuous waiver of any other provision. An amendment made to any article or section of this agreement does not constitute an amendment to or negate all other articles or sections of this agreement.

96. A delay or omission to exercise a right or power due to a default does not negate the use of that right or power in the future when deemed necessary.

97. If any PARTNER defaults in its OBLIGATIONS, a non-defaulting PARTNER will request in writing that the default be remedied within 30 calendar days. If the defaulting PARTNER fails to do so, the non-defaulting PARTNER may initiate dispute resolution.

98. PARTNERS will first attempt to resolve agreement disputes at the PROJECT team level. If they cannot resolve the dispute themselves, the CALTRANS district director and the executive officer of CITY will attempt to negotiate a resolution. If PARTNERS do not reach a resolution, PARTNERS' legal counsel will initiate mediation. PARTNERS agree to participate in mediation in good faith and will share equally in its costs.

    Neither the dispute nor the mediation process relieves PARTNERS from full and timely performance of OBLIGATIONS in accordance with the terms of this agreement. However, if any PARTNER stops fulfilling OBLIGATIONS, any other PARTNER may seek equitable relief to ensure that OBLIGATIONS continue.

Except for equitable relief, no PARTNER may file a civil complaint until after mediation, or 45 calendar days after filing the written mediation request, whichever occurs first.

PARTNERS will file any civil complaints in the Superior Court of the county in which the CALTRANS district office signatory to this agreement resides. The prevailing PARTNER will be entitled to an award of all costs, fees, and expenses, including reasonable attorney fees as a result of litigating a dispute under this agreement or to enforce the provisions of this article including equitable relief.

99. PARTNERS maintain the ability to pursue alternative or additional dispute remedies if a previously selected remedy does not achieve resolution.

100. If any provisions in this agreement are deemed to be, or are in fact, illegal, inoperative, or unenforceable, those provisions do not render any or all other agreement provisions invalid, inoperative, or unenforceable, and PARTNERS will automatically sever those provisions from this agreement.

101. PARTNERS intend this agreement to be their final expression and supersede any oral understanding or writings pertaining to OBLIGATIONS.

102. If during performance of WORK additional activities or environmental documentation is necessary to keep PROJECT in environmental compliance, PARTNERS will amend this agreement to include completion of those additional tasks.

103. PARTNERS will execute a formal written amendment if there are any changes to OBLIGATIONS.

104. This agreement will terminate upon OBLIGATION COMPLETION or an amendment to terminate this agreement, whichever occurs first.

However, all indemnification, document retention, audit, claims, environmental commitment, legal challenge, and ownership articles will remain in effect until terminated or modified in writing by mutual agreement.

105. The following documents are attached to, and made an express part of this agreement: SCOPE SUMMARY, FUNDING SUMMARY.

DEFINITIONS

CALTRANS – The California Department of Transportation

CALTRANS STANDARDS – CALTRANS policies and procedures, including, but not limited to, the guidance provided in the *Guide to Capital Project Delivery Workplan Standards* (previously known as WBS Guide) available at http://www.dot.ca.gov/hq/projmgmt/guidance.htm.

CEQA (California Environmental Quality Act) – The act (California Public Resources Code, sections 21000 et seq.) that requires state and local agencies to identify the significant environmental impacts of their actions and to avoid or mitigate those significant impacts, if feasible.

CFR (Code of Federal Regulations) – The general and permanent rules published in the Federal Register by the executive departments and agencies of the federal government.

COOPERATIVE AGREEMENT CLOSURE STATEMENT – A document signed by PARTNERS that verifies the completion of all OBLIGATIONS included in this agreement and in all amendments to this agreement.

COST – The responsibility for cost responsibilities in this agreement can take one of three assignments:

- **OBLIGATIONS COST** – A cost associated with fulfilling OBLIGATIONS that will be funded as part of this agreement. The responsibility is defined by the funding commitments in this agreement.
- **PROJECT COST** – A cost associated with PROJECT that can be funded outside of OBLIGATIONS. A PROJECT COST may not necessarily be part of this agreement. This responsibility is defined by the PARTNERS' funding commitments at the time the cost is incurred.
- **PARTNER cost** – A cost that is the responsibility of a specific PARTNER, independent of PROJECT.

FHWA – Federal Highway Administration

FHWA STANDARDS – FHWA regulations, policies and procedures, including, but not limited to, the guidance provided at www.fhwa.dot.gov/topics.htm.

FUNDING PARTNER – A PARTNER that commits a defined dollar amount to fulfill OBLIGATIONS. Each FUNDING PARTNER accepts responsibility to provide the funds identified on the FUNDING SUMMARY under its name.

FUNDING SUMMARY – The table that designates an agreement's funding sources, types of funds, and the PROJECT COMPONENT in which the funds are to be spent. Funds listed on the FUNDING SUMMARY are "not-to-exceed" amounts for each FUNDING PARTNER.

GAAP (Generally Accepted Accounting Principles) – Uniform minimum standards and guidelines for financial accounting and reporting issued by the Federal Accounting Standards

Advisory Board that serve to achieve some level of standardization. See http://www.fasab.gov/accepted.html.

HM-1 – Hazardous material (including, but not limited to, hazardous waste) that may require removal and disposal pursuant to federal or state law whether it is disturbed by PROJECT or not.

HM-2 – Hazardous material (including, but not limited to, hazardous waste) that may require removal and disposal pursuant to federal or state law only if disturbed by PROJECT.

HM MANAGEMENT ACTIVITIES – Management activities related to either HM-1 or HM-2 including, without limitation, any necessary manifest requirements and disposal facility designations.

IMPLEMENTING AGENCY – The PARTNER responsible for managing the scope, cost, and schedule of a PROJECT COMPONENT to ensure the completion of that component.

IQA (Independent Quality Assurance) – Ensuring that IMPLEMENTING AGENCY's quality assurance activities result in WORK being developed in accordance with the applicable standards and within an established Quality Management Plan (QMP). IQA does not include any work necessary to actually develop or deliver WORK or any validation by verifying or rechecking work performed by another partner.

NEPA (National Environmental Policy Act of 1969) – The federal act that establishes a national policy for the environment and a process to disclose the adverse impacts of projects with a federal nexus.

OBLIGATION COMPLETION – PARTNERS have fulfilled all OBLIGATIONS included in this agreement, and all amendments to this agreement, and have signed a COOPERATIVE AGREEMENT CLOSURE STATEMENT.

OBLIGATIONS – All responsibilities included in this agreement.

OBLIGATIONS COST – See COST.

OMB (Office of Management and Budget) – The federal office that oversees preparation of the federal budget and supervises its administration in Executive Branch agencies.

PA&ED (Project Approval and Environmental Document) – See PROJECT COMPONENT.

PARTNER – Any individual signatory party to this agreement.

PARTNERS – The term that collectively references all of the signatory agencies to this agreement. This term only describes the relationship between these agencies to work together to achieve a mutually beneficial goal. It is not used in the traditional legal sense in which one PARTNER's individual actions legally bind the other partners.

PROJECT – The undertaking to reconstruct the existing US 101 / Gloria Road interchange in the City of Gonzales.

PROJECT COMPONENT – A distinct portion of the planning and project development process of a capital project as outlined in California Government Code, section 14529(b).

- **PID (Project Initiation Document) –** The activities required to deliver the project initiation document for PROJECT.
- **PA&ED (Project Approval and Environmental Document) –** The activities required to deliver the project approval and environmental documentation for PROJECT.
- **PS&E (Plans, Specifications, and Estimate) –** The activities required to deliver the plans, specifications, and estimate for PROJECT.
- **R/W (Right of Way) SUPPORT –**The activities required to obtain all property interests for PROJECT.
- **R/W (Right of Way) CAPITAL –** The funds for acquisition of property rights for PROJECT.
- **CONSTRUCTION SUPPORT –** The activities required for the administration, acceptance, and final documentation of the construction contract for PROJECT.
- **CONSTRUCTION CAPITAL –** The funds for the construction contract.

PROJECT COST – See COST.

PROJECT MANAGEMENT PLAN – A group of documents used to guide a project's execution and control throughout that project's lifecycle.

QMP (Quality Management Plan) – An integral part of the Project Management Plan that describes IMPLEMENTING AGENCY's quality policy and how it will be used.

SAFETEA-LU – Safe, Accountable, Flexible, Efficient Transportation Equity Act: A Legacy for Users

SCOPE SUMMARY – The attachment in which each PARTNER designates its commitment to specific scope activities within each PROJECT COMPONENT as outlined by the *Guide to Capital Project Delivery Workplan Standards* (previously known as WBS Guide) available at http://www.dot.ca.gov/hq/projmgmt/guidance.htm.

SHS (State Highway System) – All highways, right of way, and related facilities acquired, laid out, constructed, improved, or maintained as a state highway pursuant to constitutional or legislative authorization.

SPONSOR – Any PARTNER that accepts the responsibility to establish scope of PROJECT and the obligation to secure financial resources to fund PROJECT. SPONSOR is responsible for adjusting the PROJECT scope to match committed funds or securing additional funds to fully fund the PROJECT scope. If a PROJECT has more than one SPONSOR, funding adjustments will be made by percentage (as outlined in Responsibilities). Scope adjustments must be developed through the project development process and must be approved by CALTRANS as the owner/operator of the SHS.

WORK – All scope activities included in this agreement.

CONTACT INFORMATION

The information provided below indicates the primary contact data for each PARTNER to this agreement. PARTNERS will notify each other in writing of any personnel or location changes. Contact information changes do not require an amendment to this agreement.

The primary agreement contact person for CALTRANS is:
David Rasmussen, Project Manager
50 Higuera Street
San Luis Obispo, California 93401
Office Phone: (805) 549-3677
Mobile Phone: (805) 440-2480

The primary agreement contact person for CITY is:
Carlos Lopez, Director of Public Works
147 Fourth Street
Gonzales, California 93926
Office Phone: 831-675-5000

SIGNATURES

PARTNERS declare that:

1. Each PARTNER is an authorized legal entity under California state law.
2. Each PARTNER has the authority to enter into this agreement.
3. The people signing this agreement have the authority to do so on behalf of their public agencies.

STATE OF CALIFORNIA
DEPARTMENT OF TRANSPORTATION

APPROVED

By:_____
RICHARD KRUMHOLZ
District Director

Date:_____

CERTIFIED AS TO FUNDS:

By:_____
Julia Bolger
Resource Manager

Date:_____

CITY OF GONZALES

APPROVED

By:_____

Date:_____

By:_____

Date:_____

SCOPE SUMMARY

4	5	6	7	8	Description	CALTRANS	CITY	N/A
2	160				Perform Preliminary Engineering Studies and Draft Project Report	X	X	
		05			Updated Project information		X	
		10			Engineering Studies		X	
		15			Draft Project Report		X	
		20			Engineering and Land Net Surveys		X	
		30			Environmental Study Request (ESR)		X	
		40			NEPA Delegation	X		
		45			Base Maps and Plan Sheets for Project Report and Environmental Studies		X	
2	165				Perform Environmental Studies and Prepare Draft Environmental Document	X	X	
		05			Environmental Scoping of Alternatives Identified for Studies in Project Initiation Document	X		
		10			General Environmental Studies		X	
		15			Biological Studies		X	
		20			Cultural Resource Studies		X	
			05		Archaeological Survey		X	
				05	Area of Potential Effects/Study Area Maps		X	
				10	Native American Consultation		X	
				15	Records and Literature Search		X	
				20	Field Survey		X	
				25	Archaeological Survey Report		X	
				99	Other Archaeological Survey Products		X	
			10		Extended Phase I Archaeological Studies		X	
				05	Native American Consultation		X	
				10	Extended Phase I Proposal		X	
				15	Extended Phase I Field Investigation		X	
				20	Extended Phase I Materials Analysis		X	
				25	Extended Phase I Report		X	
				99	Other Phase I Archaeological Study Products		X	
			15		Phase II Archaeological Studies		X	
				05	Native American Consultation		X	
				10	Phase II Proposal		X	
				15	Phase II Field Investigation		X	
				20	Phase II Materials Analysis		X	
				25	Phase II Report		X	
				99	Other Phase II Archaeological Study Products		X	
			20		Historical and Architectural Resource Studies		X	
				05	Preliminary Area of Potential Effects/Study Area Maps for Architecture		X	

				10	Historic Resources Evaluation Report - Archaeology		X	
				15	Historic Resource Evaluation Report - Architecture (HRER)		X	
				20	Bridge Evaluation		X	
				99	Other Historical and Architectural Resource Study Products		X	
			25		Cultural Resource Compliance Consultation Documents		X	
				05	Final Area of Potential Effects/Study Area Maps		X	
				10	PRC 5024.5 Consultation		X	
				15	Historic Property Survey Report/Historic Resources Compliance Report		X	
				20	Finding of Effect		X	
				25	Archaeological Data Recovery Plan/Treatment Plan		X	
				30	Memorandum of Agreement		X	
				99	Other Cultural Resources Compliance Consultation Products		X	
		25			Draft Environmental Document or Categorical Exemption/Exclusion	X	X	
			10		Section 4(F) Evaluation	X		
			20		Environmental Quality Control and Other Reviews	X		
			25		Approval to Circulate Resolution	X		
			30		Environmental Coordination		X	
			99		Other Draft Environmental Document Products		X	
		30			NEPA Delegation	X		
2	170				Permits, Agreements, and Route Adoptions during PA&ED component	X	X	
		05			Required permits		X	
		15			Railroad Agreements		X	
		20			Freeway Agreements		X	
		25			Agreement for Material Sites		X	
		30			Executed Maintenance Agreement		X	
		40			Route Adoptions		X	
		45			MOU From Tribal Employment Rights Office (TERO)		X	
		55			NEPA Delegation	X		
2	175				Circulate Draft Environmental Document and Select Preferred Project Alternative Identification	X	X	
		05			DED Circulation		X	
		10			Public Hearing		X	
		15			Public Comment Responses and Correspondence		X	
		20			Project Preferred Alternative	X		
		25			NEPA Delegation	X		
2	180				Prepare and Approve Project Report and Final Environmental Document	X	X	
		05			Final Project Report		X	
		10			Final Environmental Document	X	X	
			05		Approved Final Environmental Document	X		
				05	Draft Final Environmental Document Review	X		
				10	Revised Draft Final Environmental Document	X		
				15	Section 4(F) Evaluation	X		
				20	Findings	X		
				25	Statement of Overriding Considerations	X		
				30	CEQA Certification	X		
				40	Section 106 Consultation and MOA	X		

				45	Section 7 Consultation	X		
				50	Final Section 4(F) Statement	X		
				55	Floodplain Only Practicable Alternative Finding	X		
				60	Wetlands Only Practicable Alternative Finding	X		
				65	Section 404 Compliance	X		
				70	Mitigation Measures	X		
			10		Public Distribution of Final Environmental Document and Respond To Comments	X		
			15		Final Right of Way Relocation Impact Document		X	
			99		Other Final Environmental Document Products		X	
		15			Completed Environmental Document	X	X	
			05		Record of Decision (NEPA)	X		
			10		Notice of Determination (CEQA)	X		
			20		Environmental Commitments Record		X	
			99		Other Completed Environmental Document Products		X	
		20			NEPA Delegation	X		

FUNDING SUMMARY

Funding Source	Funding Partner	Fund Type	PA&ED	Subtotal Support	Subtotal Capital	Subtotal Funds Type
LOCAL	CITY	Local	$1,060,000	$1,060,000	$0	$1,060,000
		Subtotals by Component	$1,060,000	$1,060,000	$0	$1,060,000

ATTACHMENT L

Life Cycle Cost Analysis Form

Life Cycle Cost Analysis Form

Alternative 1
Hot Mix Asphalt (HMA) (Flexible), 20-year design life;

Streets: (0.60 ft) HMA/ (1.25' ft) Aggregate Base (Class 2 AB) / (0.70 ft) Aggregate Sub-base (Class 2 AS).
Interchange Ramps: (0.60 ft) HMA/ (1.25' ft) Aggregate Base (Class 2 AB) / (0.70 ft) Aggregate Sub-base (Class 2 AS).

Pavement Design Life: 20 Years

Initial Construction Costs:	$ 36800000	
Initial Project Support Costs:	$ 9700000	
Future Maintenance & Rehabilitation Costs: *	$ 1474030	
TOTAL AGENCY COSTS:		$ 47957620
USER COSTS:		$ 16410
TOTAL LIFE-CYCLE COST:		$ 47974030

Reason that this is not Preferred Alternative:
HMA is not preferred because it does not have the overall life-cycle cost.

Alternative 2:
Rubberized Hot Mix Asphalt (HMA) (Flexible), 20-year design life;

Streets: (0.60 ft) RHMA/ (1.25 ft) Aggregate Base (Class 2 AB) / (0.70 ft) Aggregate Sub-base (Class 2 AS).
Interchange Ramps: (0.60 ft) Rubberized HMA/ (1.35 ft) Aggregate Base (Class 2 AB) / (0.70 ft) Aggregate Sub-base (Class 2 AS).

Pavement Design Life: 20 Years

Initial Construction Costs:	$ 37300000	
Initial Project Support Costs:	$ 9800000	
Future Maintenance & Rehabilitation Costs: **	$ 1145890	
TOTAL AGENCY COSTS:		$ 48245890
USER COSTS:		$ 13670
TOTAL LIFE-CYCLE COST:		$ 48259560

Reason that this is not preferred Alternative:
This alternative was not selected because it does not have the lowest overall life-cycle cost.

*Includes both future maintenance, construction, and project support costs.

Life Cycle Cost Analysis Form

Alternative 3
Rubberized HMA (RHMA) (Flexible), 40-year design life:
Streets: (0.2 ft) Rubberized HMA (RHMA)/ (0.4 ft) HMA/ (1.35 ft) Aggregate Base (Class 2 AB) / (0.75 ft) Aggregate Sub-base (Class 2 AS).
Interchange Ramps: (0.2 ft) Rubberized HMA (RHMA)/ (0.45 ft) HMA/ (1.45 ft) Aggregate Base (Class 2 AB) / (0.85 ft) Aggregate Sub-base (Class 2 AS).

Pavement Design Life: 40 Years		
Initial Construction Costs:	$ 37400000	
Initial Project Support Costs:	$ 9860000	
Future Maintenance & Rehabilitation Costs: *	$ 659040	
TOTAL AGENCY COSTS:		$ 47919040
USER COSTS:		$ 5080
TOTAL LIFE-CYCLE COST:		$ 47924120

Reason that this is preferred Alternative:
This alternative has the lowest life-cycle cost and therefore selected as the preferred alternative.

Alternative 4:
Jointed Plan Concrete Pavement (JPCP) (Rigid), 40-year design life:

Streets: (0.85 ft) JPCP / (0.4 ft) LCB/ (0.6 ft) Aggregate Sub-base (Class 2 AS).
Interchange Ramps: (0.8 ft) JPCP / (0.5 ft) LCB/ (0.7 ft) Aggregate Sub-base (Class 2 AS).

Pavement Design Life: 40 Years		
Initial Construction Costs:	$ 38400000	
Initial Project Support Costs:	$ 10100000	
Future Maintenance & Rehabilitation Costs: **	$ 266710	
TOTAL AGENCY COSTS:		$ 48766710
USER COSTS:		$ 9430
TOTAL LIFE-CYCLE COST:		$ 48776140

Reason that this is not preferred Alternative:
JPCP (Rigid) was chosen for comparison with RAC (Flexible). The analysis showed that RHMA is a more cost-effective solution.

*Includes both future maintenance, construction, and project support costs.

ATTACHMENT M

Caltrans Distribution List

Caltrans Distribution List

Name	Branch	Phone Number	Email Address
Jim Tkach	Hazardous Waste		
Paula Huddleston	Environmental		
Paula Juelke Carr Krista Kiaha	Environmental (Cultural)	(831) 542-4659 (831) 542-4799	
Joel Wright	Maintenance		
John Magorian	Right of Way		
Pete Riegelhuth	NPDES/Stormwater Unit		
Laurie D. Cummings	Landscape Architecture		
Brent Massey	DES-OSFP		
Jim Mills	Hydraulics		
Roger Barnes	Traffic Ops		
Julie Gonzalez	Electrical Operations		
Tamara Babcock	Traffic Safety		
Jacques Van Zeventer	Traffic Management		
Glenn Johnson	Materials Engineering		
Mike Dubin	Construction		
Mike Janzen	HQ Geometric Review		
John Fouche	Design	(831) 549-3330	

ATTACHMENT N

Traffic Management Plan Data Sheet/Checklist

DISTRICT 5

TRAFFIC MANAGEMENT PLAN DATA SHEET/CHECKLIST

District / EA: 05/0P930K
Project Engineer: John Fouche
Date Prepared: 5/25/2010

Co.-Rte-PM: Mon-101-68.4-70.4
Description: Reconstruct Interchange
Working Days: unknown

Check each box and reference your attachments to the item(s) number(s) shown on the list.

	Required	Recommended	Not required	COMMENTS
1.0 Public Information				
1.1 Public Awareness Campaign	x			Include $7500
1.2 Other Strategies	x			
2.0 Motorist Information Strategies				
2.1 Changeable Message Signs - Portable	x			Estimate $200 per CMS. One per ramp closure.
2.2 Construction Area Signs	x			
2.3 Highway Advisory Radio (fixed and mobile)			x	
2.4 Planned Lane Closure Web Site	x			Construction to provide information to TMC
2.5 Caltrans Highway Information Network (CHIN)			x	Construction to provide information to TMC
3.0 Incident Management				
3.1 COZEEP (during k-rail moving & work in live traffic)	x			Estimate $100/hour days, $200/hour nights
3.2 Freeway Service Patrol			x	
4.0 Traffic Management Strategies				
4.1 Lane/Ramp Closures Charts	x			Attached
4.2 Total Facility Closure			x	
4.3 Coordination with adjacent construction			x	
4.4 Contingency Plan	x			Standard SSP
4.4.1 Material/Equipment Standby			x	Contruction/Contractor to provide
4.4.2 Emergency Detour Plan			x	Contruction/Contractor to provide
4.4.3 Emergency Notification Plan			x	Contruction/Contractor to provide
4.5 SSP 12-220 and Others	x			
4.6 Other Strategies:				
Detour required for ramp closures and	x			
construction and removal of falsework				
Include $300/day for Maintain Traffic	x			066070
5.0 Anticipated Delays				
5.1 Lane Closure Review Committee			x	
(for anticipated delays over 30 minutes)				
5.2 Planned freeway closures			x	
6.0 Placement of CMS	x			Per RE

5.3 Minimal delay anticipated -
no further action required

[x] yes [ ] no If no, explain additional measures on attached sheet.

Shayne Sandeman
District 5 TMP Coordinator