PLAN

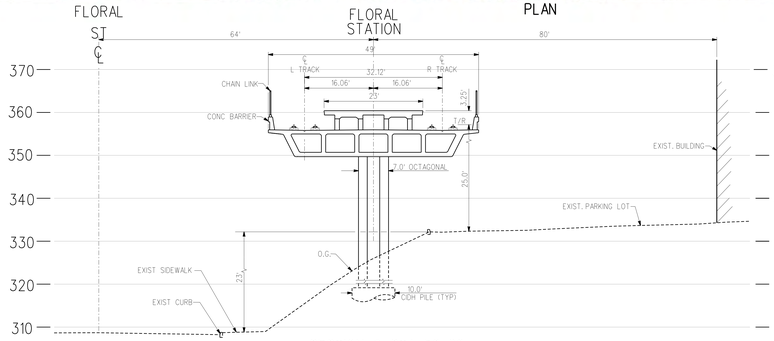

SECTION @ STA 52+00
NTS

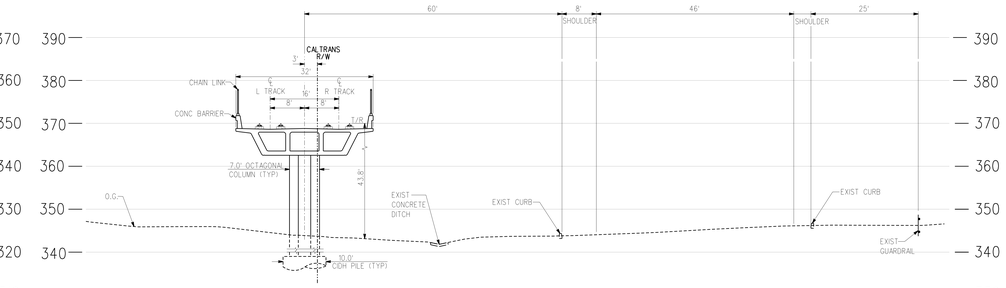

SECTION @ STA 98+00
NTS

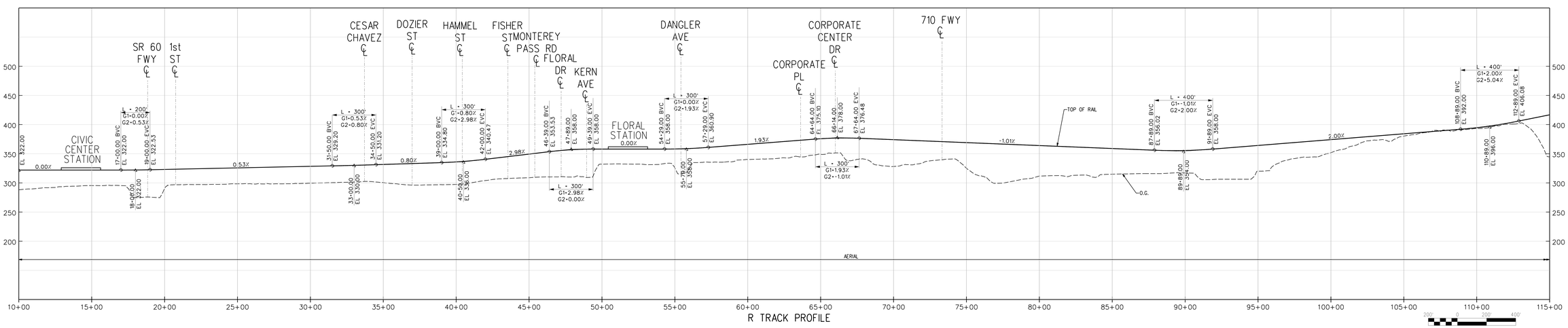

R TRACK PROFILE

REV	DATE	BY	APP	REG NO	EXPIRES	SEAL HOLDER	DESCRIPTION

DESIGNED BY
DRAWN BY
CHECKED BY
IN CHARGE
DATE SEPT 2012

Metro
LOS ANGELES COUNTY
METROPOLITAN TRANSPORTATION AUTHORITY

515 S. FLOWER STREET
4TH FLOOR
LOS ANGELES, CA 90071
T 213-330-7200
F 213-330-7201

SUBMITTED
APPROVED

710 STUDY
CONCEPTUAL DESIGN

ALTERNATIVE LRT 4A TRACK PLAN AND PROFILE
STA R 10+00 TO STA R 115+00

CONTRACT NO PS4710-2755
DRAWING NO T-101
REV
SCALE HORZ: 1" = 200'
SHEET NO

Plot Driver=$PLTDRV$ Pentable=$PENTBL$ $USER$ $TIME$ $DATE$ $FILE$
Model Name=$MODELNAME$

PLAN

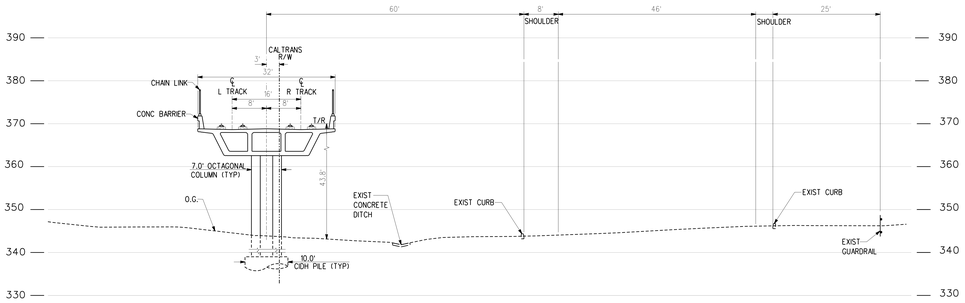

SECTION @ STA 111+00

NTS

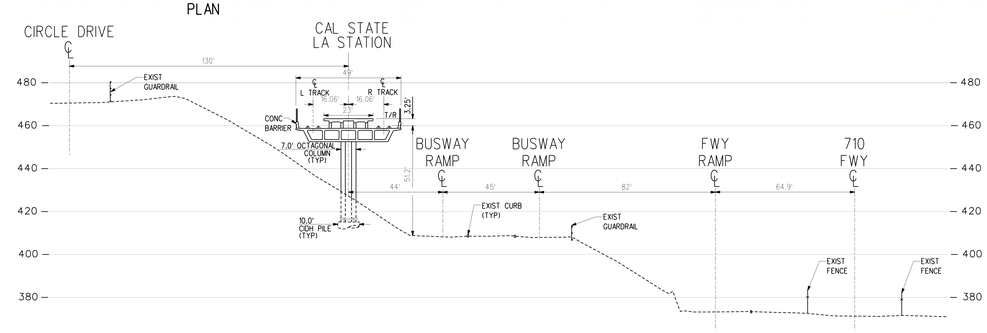

SECTION @ STA 129+00

NTS

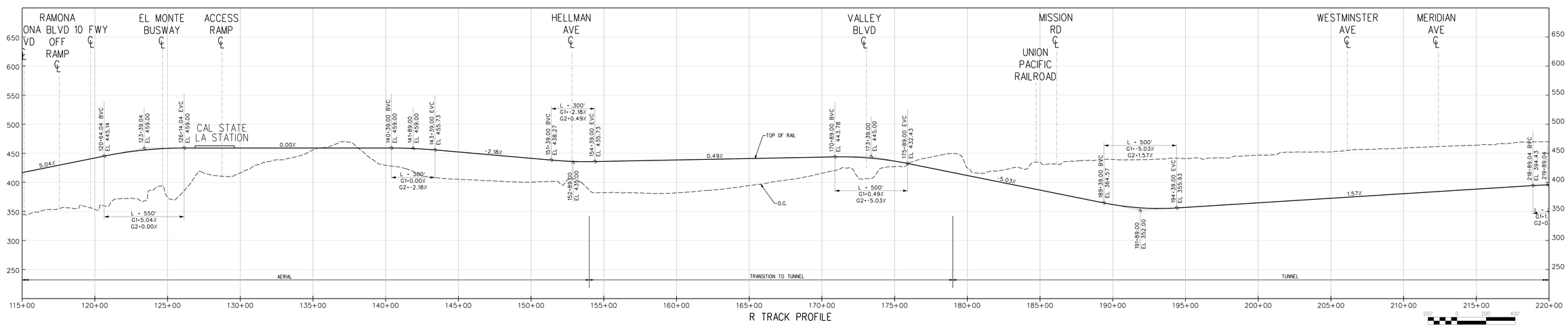

R TRACK PROFILE

REV	DATE	BY	APP	REG NO	EXPIRES	SEAL HOLDER	DESCRIPTION

DESIGNED BY
DRAWN BY
CHECKED BY
IN CHARGE
DATE SEPT 2012

Metro
LOS ANGELES COUNTY
METROPOLITAN TRANSPORTATION AUTHORITY

515 S. FLOWER STREET
47TH FLOOR
LOS ANGELES, CA 90071
T 213-330-7200
F 213-330-7201

SUBMITTED
APPROVED

710 STUDY
CONCEPTUAL DESIGN

ALTERNATIVE LRT 4A TRACK PLAN AND PROFILE
STA R 115+00 TO STA R 220+00

CONTRACT NO PS4710-2755
DRAWING NO T-102
REV
SCALE HORZ: 1" = 200'
SHEET NO

$FILE$
$DATE$
$TIME$
$USER$
Pentable=$PENTBL$
Plot Driver=$PLTDRV$
Model Name=$MODELNAME$

PLAN

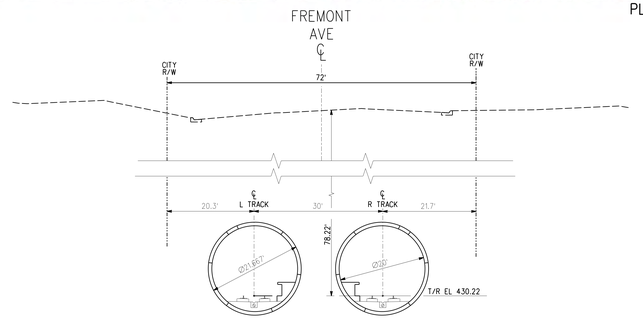

SECTION @ STA 250+00

NTS

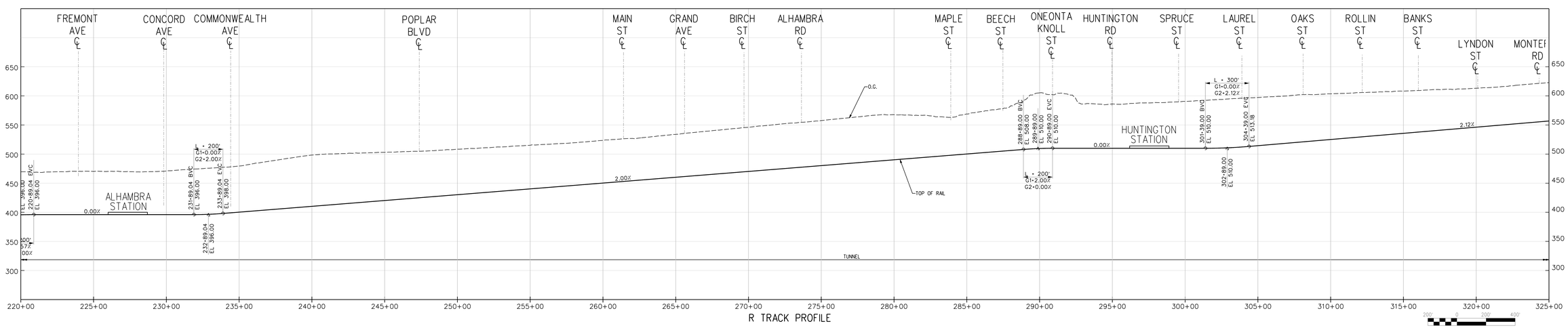

R TRACK PROFILE

REV	DATE	BY	APP	REG NO	EXPIRES	SEAL HOLDER	DESCRIPTION

DESIGNED BY
DRAWN BY
CHECKED BY
IN CHARGE
DATE SEPT 2012

Metro
LOS ANGELES COUNTY
METROPOLITAN TRANSPORTATION AUTHORITY

5th S. FLOWER STREET
4TH FLOOR
LOS ANGELES, CA 90071
T 213-330-7200
F 213-330-7201

SUBMITTED
APPROVED

710 STUDY
CONCEPTUAL DESIGN

ALTERNATIVE LRT 4A TRACK PLAN AND PROFILE
STA R 220+00 TO STA R 325+00

CONTRACT NO PS4710-2755
DRAWING NO T-103
REV
SCALE HORZ: 1" = 200'
SHEET NO

Plot Driver=$PLTDRVS$ Pentable=$PENTBL$$ $USER$ $TIME$ $DATE$ $FILE$

Model Name=$MODELNAME$

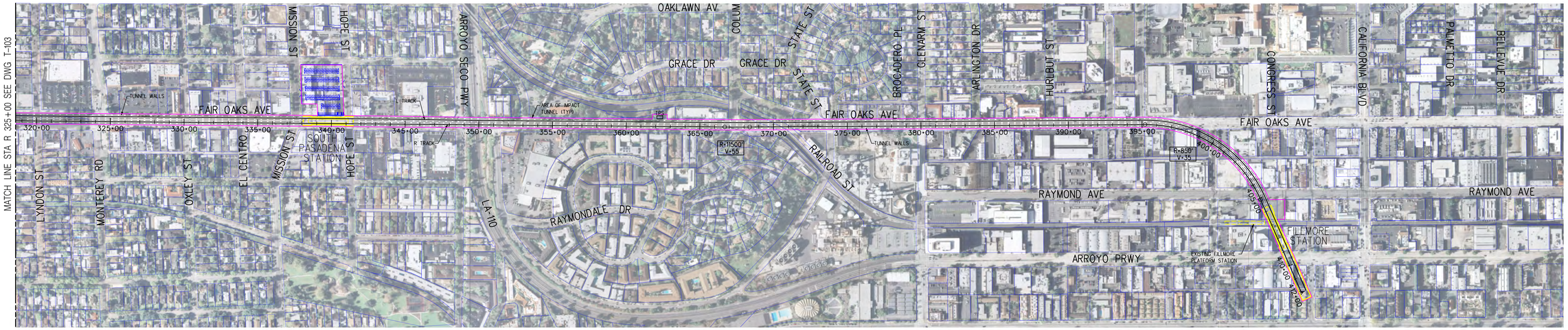

PLAN

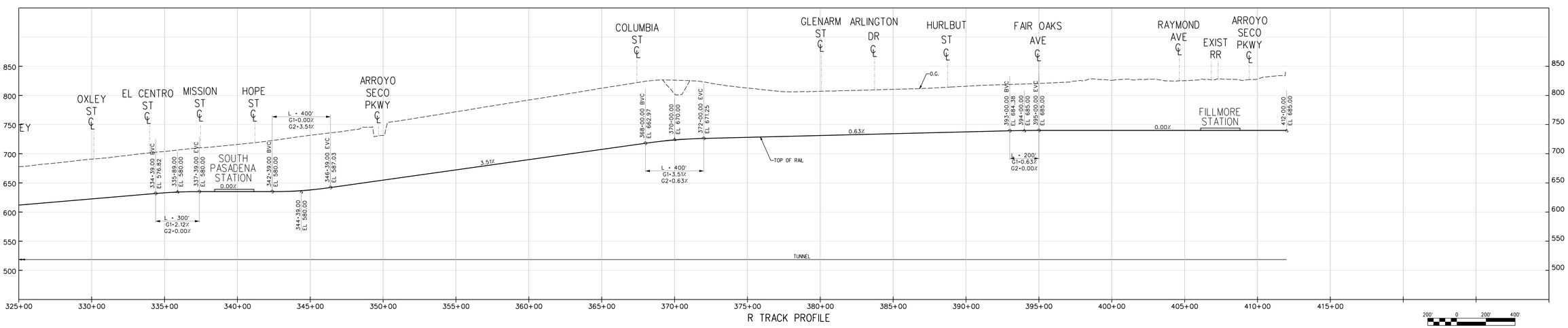

R TRACK PROFILE

REV	DATE	BY	APP	REG NO	EXPIRES	SEAL HOLDER	DESCRIPTION

DESIGNED BY
DRAWN BY
CHECKED BY
IN CHARGE
DATE SEPT 2012

LOS ANGELES COUNTY
METROPOLITAN TRANSPORTATION AUTHORITY

Metro

515 S. FLOWER STREET
4TH FLOOR
LOS ANGELES, CA 90071
T 213-330-7200
F 213-330-7201

SUBMITTED
APPROVED

710 STUDY
CONCEPTUAL DESIGN

ALTERNATIVE LRT 4A TRACK PLAN AND PROFILE
STA R 325+00 TO STA R 388+73

CONTRACT NO PS4710-2755
DRAWING NO T-104
REV
SCALE HORZ: 1" = 200'
SHEET NO

$FILE$
$DATE$
$TIME$
$USER$
Pentable=$PENTBL$
Plot Driver=$PLTDRV$
Model Name=$MODELNAME$

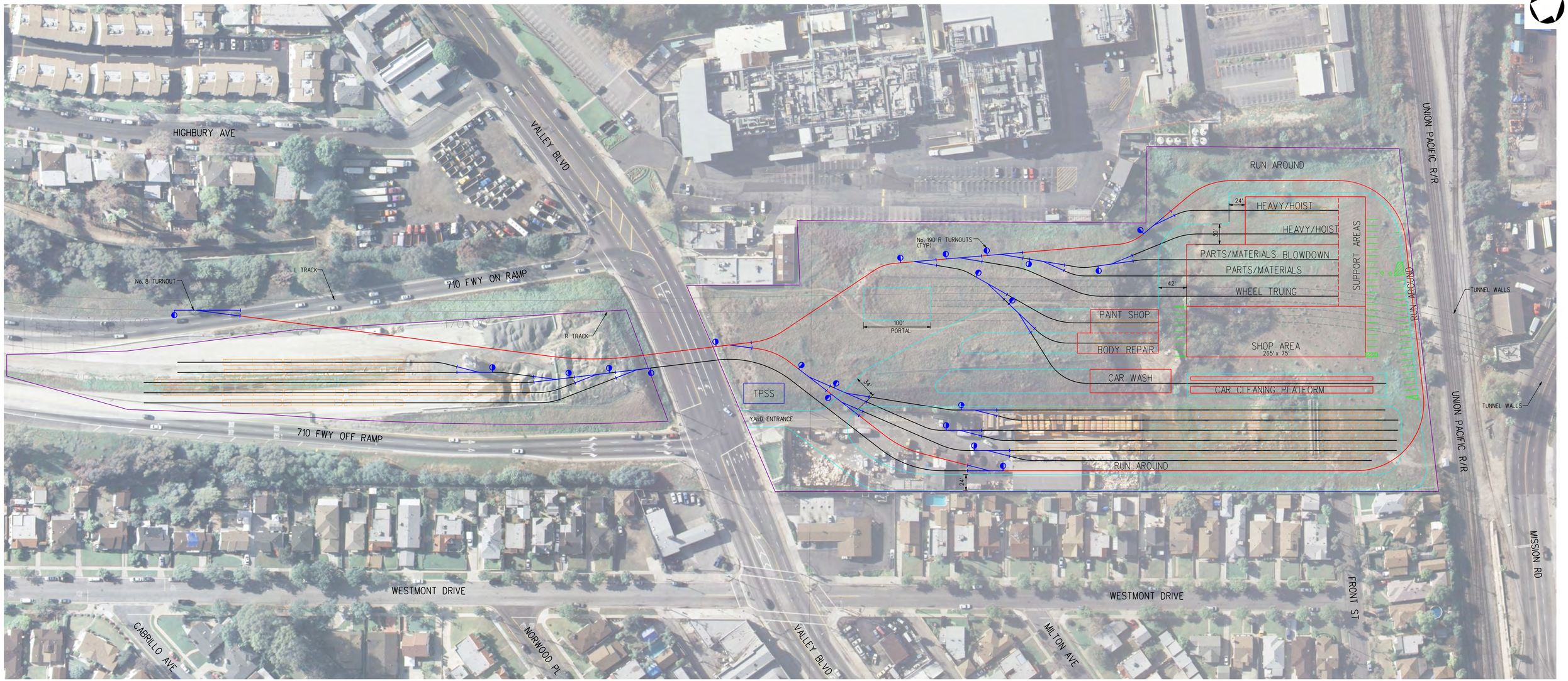

PROPOSED MAINTENANCE YARD
AREA = 12.82 ACRES
STORAGE TRACKS = 54 CARS
PARKING = 52 CARS

40' 0 40' 80'

REV	DATE	BY	APP	REG NO	EXPIRES	SEAL HOLDER	DESCRIPTION

DESIGNED BY
DRAWN BY
CHECKED BY
IN CHARGE
DATE SEPT 2012

Metro
LOS ANGELES COUNTY
METROPOLITAN TRANSPORTATION AUTHORITY

515 S. FLOWER STREET
47TH FLOOR
LOS ANGELES, CA 90071
T 213-330-7200
F 213-330-7201

SUBMITTED
APPROVED

710 STUDY
CONCEPTUAL DESIGN

ALTERNATIVE LRT 4A - PROPOSED YARD FACILITY

CONTRACT NO PS4710-2755
DRAWING NO T-105
REV
SCALE 1" = 40'
SHEET NO

Plot Driver: $PLTDRV$ Pentable: $PENTBL$ $USER$ $TIME$ $DATE$ $FILE$

Model Name: $MODELNAME$