Appendix 3B

TYLin Calculations

Steel Orthotropic Girder at Bearings

TRANSFER OF LOADS TO OBG

Self-Anchored Suspension Bridge

San Francisco Oakland Bay Bridge East Span Seismic Safety Project

Caltrans Project No. 04-0120F4

T.Y. Lin International / Moffatt & Nichol Joint Venture

July 27, 2013

BOX GIRDER SEISMIC CAPACITY DURING NEW DESIGN OF SHEAR KEYS S1, S2

These calculations evaluate the box girder at Pier E2 for seismic forces applied through the bearings prior to completing the new design of the shear keys S1 and S2. The modification of the bearings B1, B2, B3 and B4 by adding shims will not change the demands envisioned as part of the original design, shown in Page 3.

The connections of the bearings and shear keys to the OBG are achieved by the use of A354 BD rods anchored into stiffened anchor seats within the OBG. The tension of the rods generates friction to carry the longitudinal and transverse forces into a thickened key plate that forms the soffit of the box girder over Pier E2. The Key Plate appears in Section A-A of Page 4 and Section B-B of Page 5. This plate, 100 mm thick and 5 meters wide, forms a rigid platform to distribute the horizontal seismic loads coming from the shear keys and bearings, as well as from the global moments in the girders and crossbeam at Pier E2.

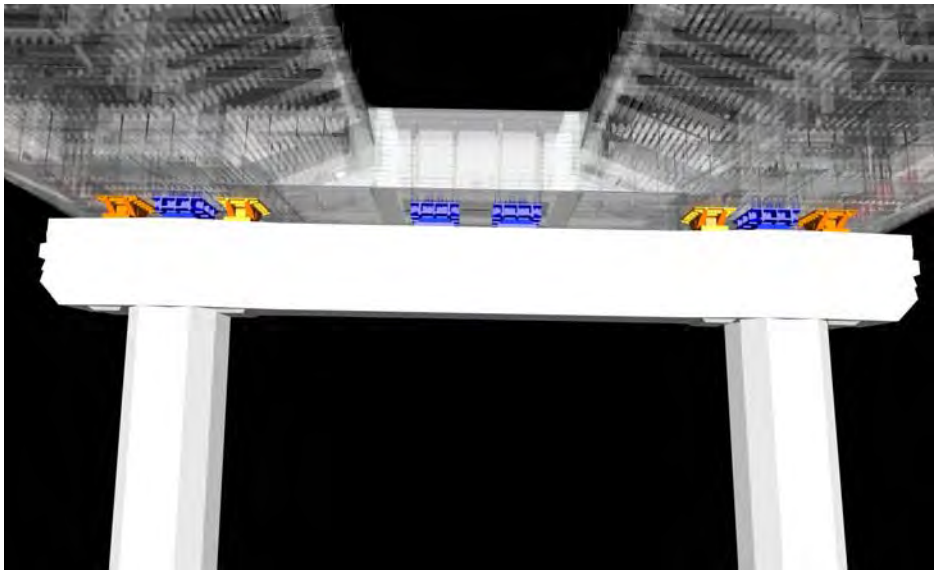

This figure shows the girders and crossbeams over the Pier E2 supports. The steel box crossbeam over the cap beam is subject to bending as it enters the main box girders. The box girders themselves bend as cantilevers over the support of the bearings and shear keys. These bendings produce compression in the key plates both transversely and longitudinally. These axial stresses have been added to the shear and axial stresses due to the bearings during an earthquake.

Vertical loads are carried by the tension of the rods, and by bearing against the stiffeners of the rod anchor seats. The layout of anchor seats is shown in Detail A on Page 4.

Pages 6 through 8 show the passage of seismic demands between the box girders and Pier E2. Page 6 shows the conceptual separation of the two structures. Page 7 shows the decomposition of force components at the bearing pins, as well as the vertical reactions into the girder due to the vertical and

transverse demands. Page 8 shows the break-down of the longitudinal demands and resulting reactions. Page six also gives a table of the governing combined demands on the bearings for load path A (with shear keys engaged) and load path B (with shear keys disengaged).

Pages 9 and 10 show the upper housing of the bearing. A total of 52 rods clamp this housing against the key plate, and the large width to height ratio results in relatively small values of vertical reactions RT and RL into the box girder.

Pages 4, 5, 11-13 show the locations of shear, bearing and tension that have been checked to verify the capacity of the bearing to box girder connections. Pages 14-16 show representative calculations for the demand/capacity ratios for these locations.

The floorbeams and longitudinal shear plates are stiffened compact elements that engage the seismic demands into the beam action of the overall box girder.

A summary of these ratios is provided in the following table, numbered per the figures in the appendix:

Component	Force	Demand/Capacity
1. Key plate	Longitudinal Transverse Combined Global and Local	10% 35% 62%
2. Longitudinal shear plate	Longitudinal to the Key Plate	76% 80%
3. Floorbeams at Pier E2	Transverse to the Key Plate Combined Global and Local	50% 56%
4. Anchor seat middle stiffeners	Tension of anchor rods	79%
5. Anchor seat side stiffeners	Tension of anchor rods	45%
6. Floorbeam web	Shear tearout at anchor seats	87%
7. Bearing upper housing	Shear friction against sliding	45%
8. A354 anchor rods	Axial tension	93%

For the vertical reactions the pretension of the anchor rods carries effectively most of the load. Only a small increase in tension results from the seismic response. Note that anchor rods were installed at 85% of the yield capacity.

In conclusion, the use of load path B during the retrofit of shear keys S1 and S2 engages the capacities anticipated in the original design, and effectively protects the bridge in the event of the Safety Evaluation Earthquake.

DIST.	COUNTY	ROUTE	KILOMETER POST TOTAL PROJECT	SHEET NO.	TOTAL SHEETS
04	SF	80	13.2/13.9	882AR2	1204

REGISTERED ENGINEER - CIVIL

12-6-04
PLANS APPROVAL DATE

REGISTERED PROFESSIONAL ENGINEER Marwan N. Nader No. C 054426 Exp. 12/31/13 CIVIL STATE OF CALIFORNIA

The State of California or its officers or agents shall not be responsible for the accuracy or completeness of electronic copies of this plan sheet.

T.Y. LIN / MOFFATT & NICHOL
825 BATTERY STREET
SAN FRANCISCO, CA 94111

Caltrans now has a web site! To get to the web site, go to: http://www.dot.ca.gov

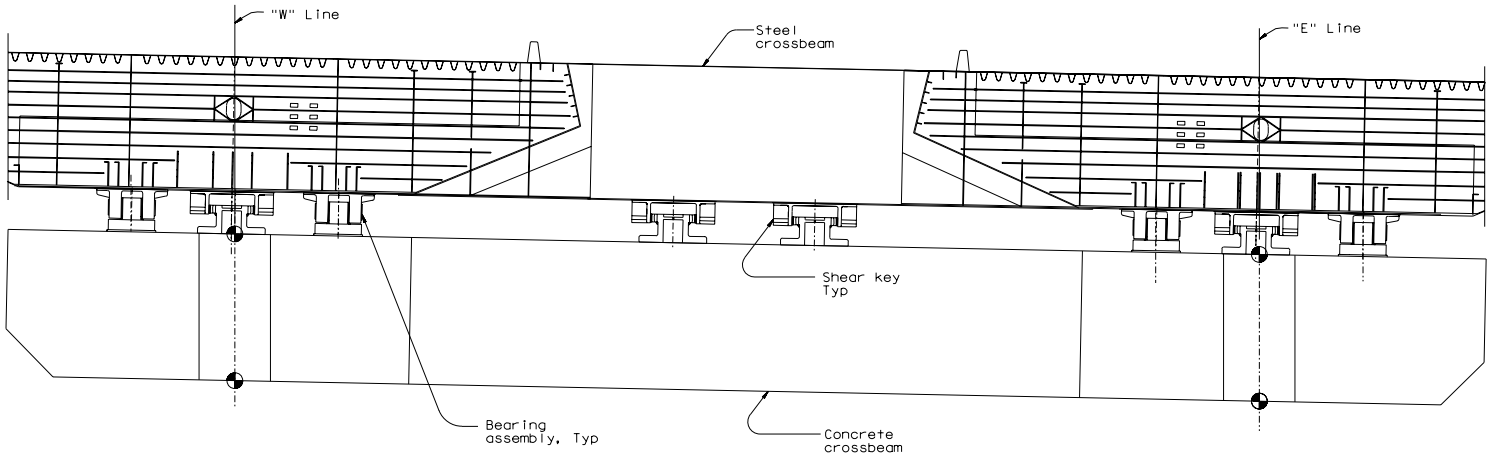

ELEVATION (Looking East)

BEARING ASSEMBLY TABLE

Location	Bearing Typ	Number of bearing units per location	Design Load (kN per bearing)							Design rotation (radians)						Design Displacement (mm)					
			Service			Ultimate 2				Service			Ultimate			Service			Ultimate		
			Compression	Uplift	Long or Trans	Load Condition	Compression	Uplift	Long / Trans	Trans Axis	Long Axis	Vert Axis	Trans Axis	Long Axis	Vert Axis	Trans Axis	Long Axis	Vert Axis	Trans Axis	Long Axis	Vert Axis
"W" Line	Spherical Bushing	2	35000	0	0	Shear Key Engaged	86000	32000	0	0.009	0	0	0.130	0.032	0.032	5	5	0	20	20	2**
						Shear Key Failed*	68000	17000	13300 / 30500												
"E" Line	Spherical Bushing	2	35000	0	0	Shear Key Engaged	86000	32000	0	0.009	0	0	0.130	0.032	0.032	5	5	0	20	20	2**
						Shear Key Failed*	68000	17000	13300 / 30500												

* Seismic load factor γ = 1.0 (For shear key engaged load condition, γ = 1.4).
** For uplifting only.

Installation Misalignment Tolerances (Per bearing/ Shear Key)	Trans./Long./Vertical	Rotational
	± 2 mm	± 0.5°

SHEAR KEY Location	ASSEMBLY TABLE Number of Shear Key Units Per Location	Design Load (kN per shear key)						Design rotation (radians)						Design Displacement (mm)					
		Service			Ultimate			Service			Ultimate			Service			Ultimate		
		Trans	Long	Vert	Trans	Long	Vert	Trans Axis	Long Axis	Vert Axis	Trans Axis	Long Axis	Vert Axis	Trans Axis	Long Axis	Vert Axis	Trans Axis	Long Axis	Vert Axis
"W" Line	1	9000	4500	0	42500	35000	0	0.009	0	0	0.130	0.130	0.130	0	0	10	0	0	20
"E" Line	1	9000	4500	0	42500	35000	0	0.009	0	0	0.130	0.130	0.130	0	0	10	0	0	20
Crossbeam	2	9000	1	0	42500	0	0	0.009	0	0	0.130	0.130	0.130	0	5	10	0	20	20

CONTRACT CHANGE ORDER NO. ____
SHEET ____ OF ____

REQUESTS FOR INFORMATION NOT ADDRESSED IN THIS CCO REMAIN IN FORCE

ALL DIMENSIONS ARE IN MILLIMETERS

SAN FRANCISCO-OAKLAND BAY BRIDGE

Bearing Demands

R. Valizadeh/V. Toan/Y.L./W.L./F.C.
DESIGN OVERSIGHT
SIGN OFF DATE XX/XX/13

MARK	DATE	DESCRIPTIONS	BY	CH'D	CCO#
2	XX/XX/13	E2 CROSS BEAM	MN	NV	XX
1	09/26/08	E2 CROSS BEAM	MN	NV	71

REVISIONS

	BY	CHECKED
DESIGN	M. Nader	L. Rus
DETAILS	N. Vo	J. Leventini
QUANTITIES	N. Vo	J. Leventini

PREPARED FOR THE STATE OF CALIFORNIA DEPARTMENT OF TRANSPORTATION

Rev. Date: 5-18-98

ORIGINAL SCALE IN MILLIMETERS FOR REDUCED PLANS 0 10 20 30 40 50 60 70 80 90 100

CU 04
EA 0120F1

DISREGARD PRINTS BEARING EARLIER REVISION DATES 12/07/05

REVISION DATES (PRELIMINARY STAGE ONLY)

SHEET 465AR2 OF

FILE => L:\BB\04-012001\SAS\Contract Plans and CCO\CCO\CCO#XXX\1-Original XX-XX-13\DGN\aksrd02.dgn

100 % PS&E

USERNAME => arivera DATE PLOTTED => 19 JUL 2013 TIME PLOTTED => 15:31:41

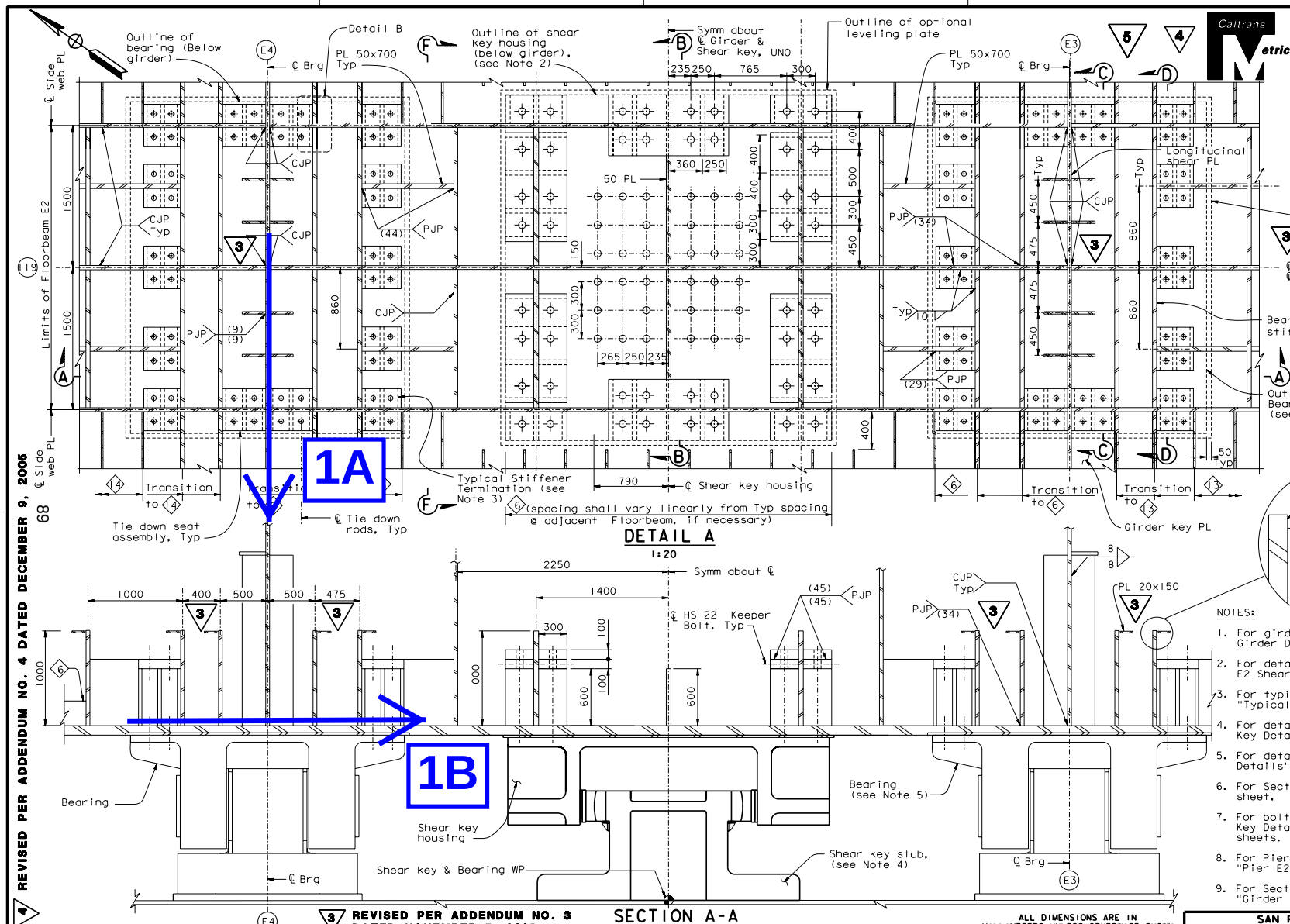

DIST.	COUNTY	ROUTE	KILOMETER POST TOTAL PROJECT	SHEET NO.	TOTAL SHEETS
04	SF	80	13.2/13.9	675	1204

George Baker
REGISTERED ENGINEER - CIVIL
12-6-04
PLANS APPROVAL DATE

REGISTERED PROFESSIONAL ENGINEER George S. Baker No. C57112 Exp. 12/31/05 CIVIL STATE OF CALIFORNIA

The State of California or its officers or agents shall not be responsible for the accuracy or completeness of electronic copies of this plan sheet.

T.Y. LIN / MOFFATT & NICHOL
825 BATTERY STREET
SAN FRANCISCO, CA 94111

Caltrans now has a web site! To get to the web site, go to: http://www.dot.ca.gov

LEGEND

- 75 Dia anchor bolt (A354 Gr. BD)
- 64 Dia anchor bolt (A354 Gr. BD)
- 29 Dia anchor bolt (A354 Gr. BD)
- 50 Dia anchor bolt (A354 Gr. BD)
- t - thickness of terminating plate in T-joint

NOTES:

1. For girder plate thickness, see "Typical Girder Details No.1" sheet.
2. For details of shear key housing, see "Pier E2 Shear Key" sheets.
3. For typical girder stiffener termination, see "Typical Girder Details No.16" sheet.
4. For details of shear key, see "Pier E2 Shear Key Details" sheets.
5. For details of bearing, see "Pier E2 Bearing Details" sheets.
6. For Section F-F, see "Girder At Pier E2 No.6" sheet.
7. For bolt and rod locations, see "Pier E2 Shear Key Details" and "Pier E2 Bearing Details" sheets.
8. For Pier E2 bearing and shear key location, see "Pier E2 Bearing And Shear Key Layout" sheet.
9. For Section B-B, C-C, D-D and detail B, see "Girder At Pier E2 No.3" sheet.

4 REVISED PER ADDENDUM NO. 4 DATED DECEMBER 9, 2005

3 REVISED PER ADDENDUM NO. 3 DATED NOVEMBER 7, 2005

5 REVISED PER ADDENDUM NO. 5 DATED DECEMBER 21, 2005

ALL DIMENSIONS ARE IN MILLIMETERS UNLESS OTHERWISE SHOWN

SAN FRANCISCO OAKLAND BAY BRIDGE

R. Valizadeh/V. Toan/Y.L./W.L./F.C.
DESIGN OVERSIGHT
SIGN OFF DATE 12/07/05

	BY	CHECKED
DESIGN	G. Baker	P. Ritchie
DETAILS	C. Mauch	T. McMeans
QUANTITIES	D. Turner	M. Roberts

PREPARED FOR THE STATE OF CALIFORNIA DEPARTMENT OF TRANSPORTATION

Key Plate - Axial Check

Rev. Date: 5-18-98

ORIGINAL SCALE IN MILLIMETERS FOR REDUCED PLANS 0 10 20 30 40 50 60 70 80 90 100

CU 04
EA 0120F1

DISREGARD PRINTS BEARING EARLIER REVISION DATES

REVISION DATES (PRELIMINARY STAGE ONLY) 01/05/99 01/04/99 03/24/99 04/08/02 07/01/02 11/14/02 11/13/03 11/13/03 12/01/05

SHEET 258 OF

FILE => I:\bb\04-012001\sas\contract plans and ccs\addenda\addendum 5\aggdd07.dgn

100% PS&E

DATE PLOTTED => 19 MAR 2007 TIME PLOTTED => 11:45:24

USERNAME => prtom

DIST.	COUNTY	ROUTE	KILOMETER POST TOTAL PROJECT	SHEET NO.	TOTAL SHEETS
04	SF	80	13.2/13.9	676	1204

George Baker
REGISTERED ENGINEER - CIVIL
12-6-04
PLANS APPROVAL DATE

REGISTERED PROFESSIONAL ENGINEER George S. Baker No. C 57112 Exp. 12/31/05 CIVIL STATE OF CALIFORNIA

The State of California or its officers or agents shall not be responsible for the accuracy or completeness of electronic copies of this plan sheet.

T.Y. LIN / MOFFATT & NICHOL
825 BATTERY STREET
SAN FRANCISCO, CA 94111

Caltrans now has a web site! To get to the web site, go to: http://www.dot.ca.gov

Caltrans Metric

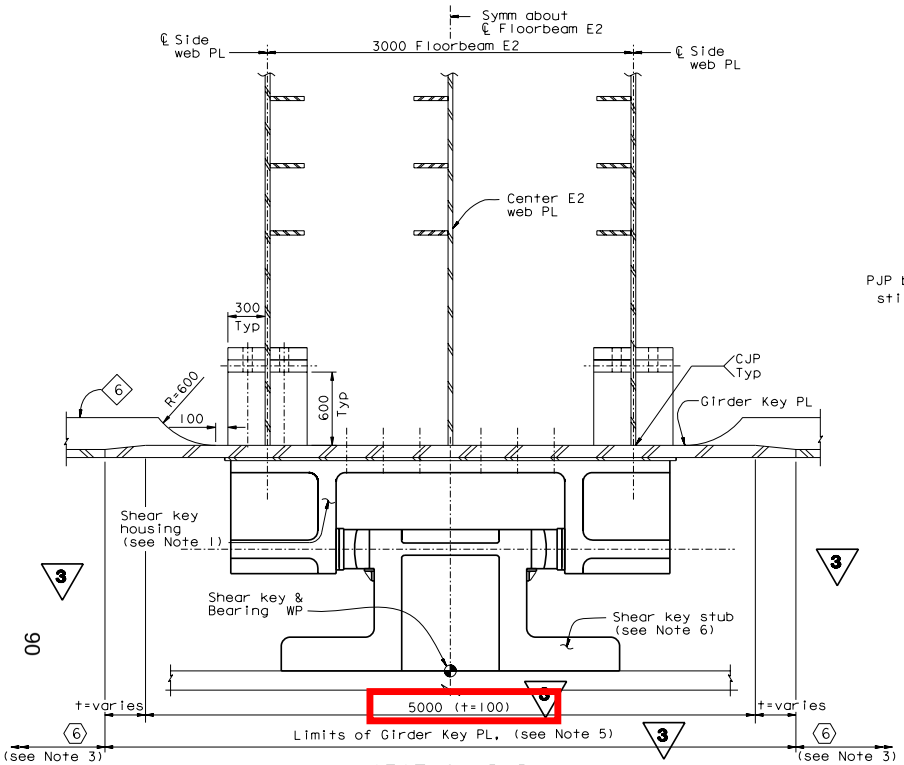

SECTION B-B
1:20

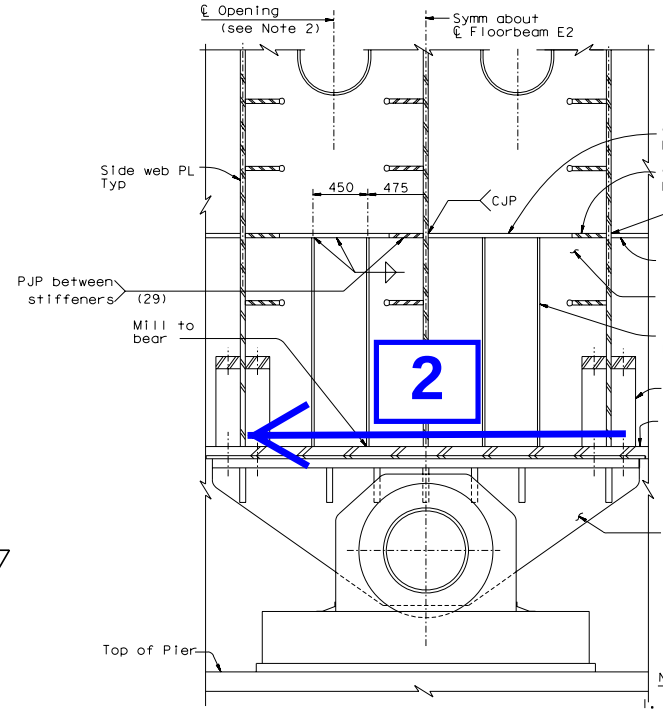

SECTION C-C
1:20

DETAIL B - ALTERNATIVE STIFFENER WELD
1:10

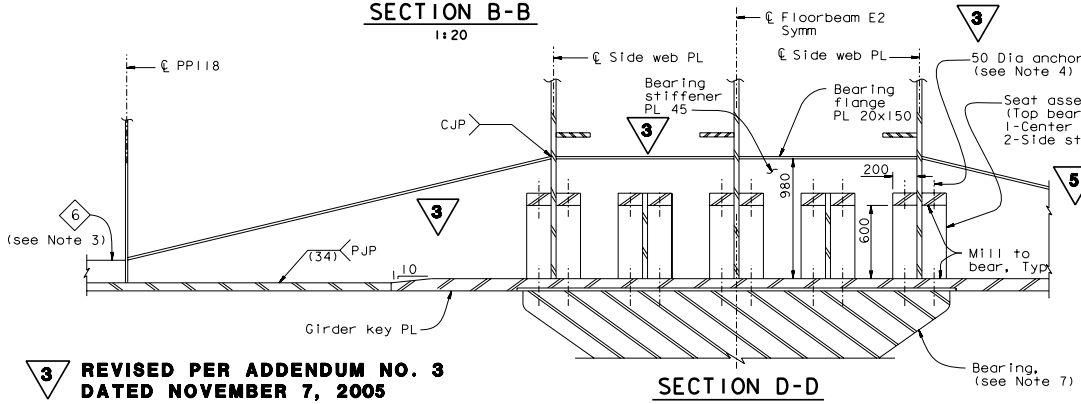

SECTION D-D
1:20

NOTES:

1. For shear key housing details, see "Pier E2 Shear Key Details" sheet.
2. For opening details, see "Typical Girder Details No. 7" sheet.
3. For typical girder details not shown, see "Typical Girder Details" sheets.
4. For anchor bolt, see "Pier E2 Bearing Details" sheets.
5. For transverse limits of girder key PL, see "Girder At Pier E2 No. 1" sheet.
6. For shear key details, see "Pier E2 Shear Key Details" sheets.
7. For Pier E2 bearing details, see "Pier E2 Bearing Details" sheets.
8. For bearing stiffeners in faying contact with diaphragms or webs, stiffener corners and welds may be ground to allow fit-up.
9. Leveling plate may be used to compensate for the permissible out-of-flatness of the girder key plate. Leveling plates shall be tapered as required to ensure proper alignment of the bearings and shear keys in both longitudinal and transverse directions.

3 REVISED PER ADDENDUM NO. 3 DATED NOVEMBER 7, 2005

5 REVISED PER ADDENDUM NO. 5 DATED DECEMBER 21, 2005

4 REVISED PER ADDENDUM NO. 4 DATED DECEMBER 9, 2005

ALL DIMENSIONS ARE IN MILLIMETERS UNLESS OTHERWISE SHOWN

SAN FRANCISCO OAKLAND BAY BRIDGE
EAST SPAN SEISMIC SAFETY PROJECT

Longitudinal Shear Plate - Shear Check

R. Valizadeh/V. Toan/Y.L./W.L./F.C.
DESIGN OVERSIGHT
Roya Valizadeh / Vong Toan / Y. Liu
SIGN OFF DATE 12/07/05

DESIGN BY G. Ba
DETAILS BY C. Mc
QUANTITIES BY D. Tu

Rev. Date: 5-18-98

FOR REDUCED PLANS 0 10 20 30 40 50 60 70 80 90 100

EA 0120F1

LANGTER REVISION DATES 11/15/04 01/07/05 01/28/05 02/08/05 03/08/05 11/30/05 12/07/05

259

FILE => I:\bb\04-012001\sas\contract plans and cco\addenda\addendum 5\aggdd08.dgn

USERNAME => pfarm DATE PLOTTED => 19 MAR 2007 TIME PLOTTED => 11:44:14

100 % PS&E

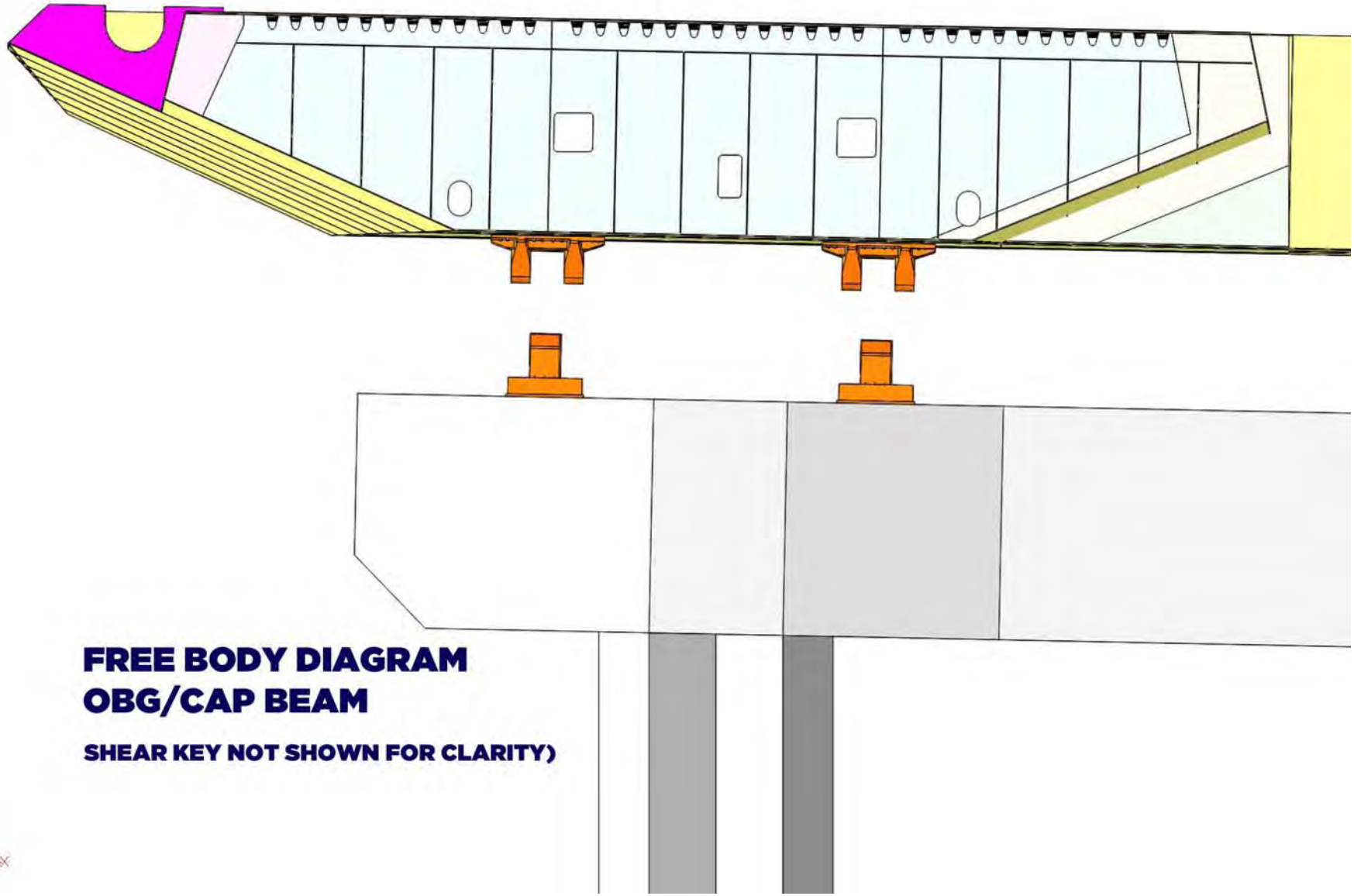
FREE BODY DIAGRAM
OBG/CAP BEAM
SHEAR KEY NOT SHOWN FOR CLARITY)
Z
X

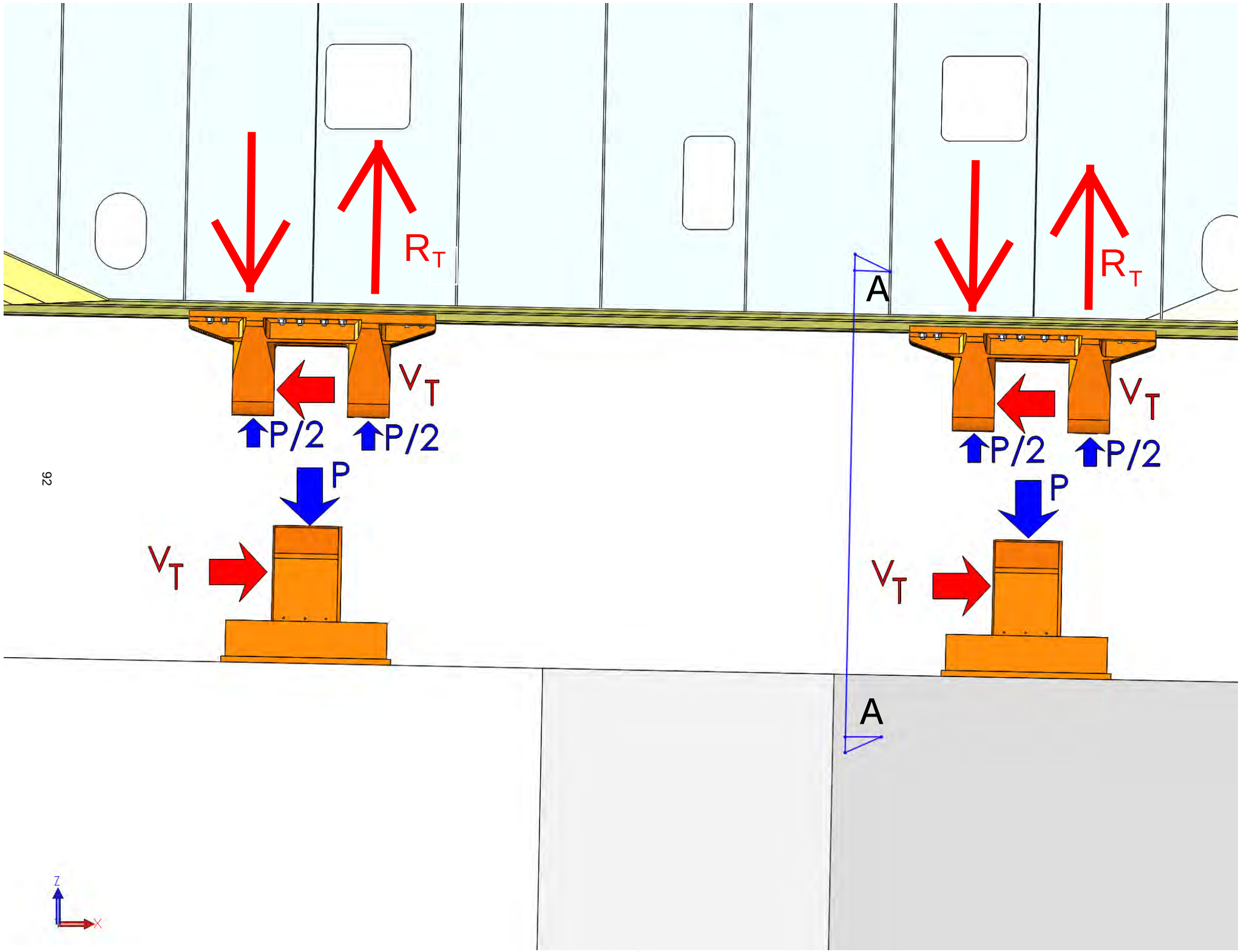

92

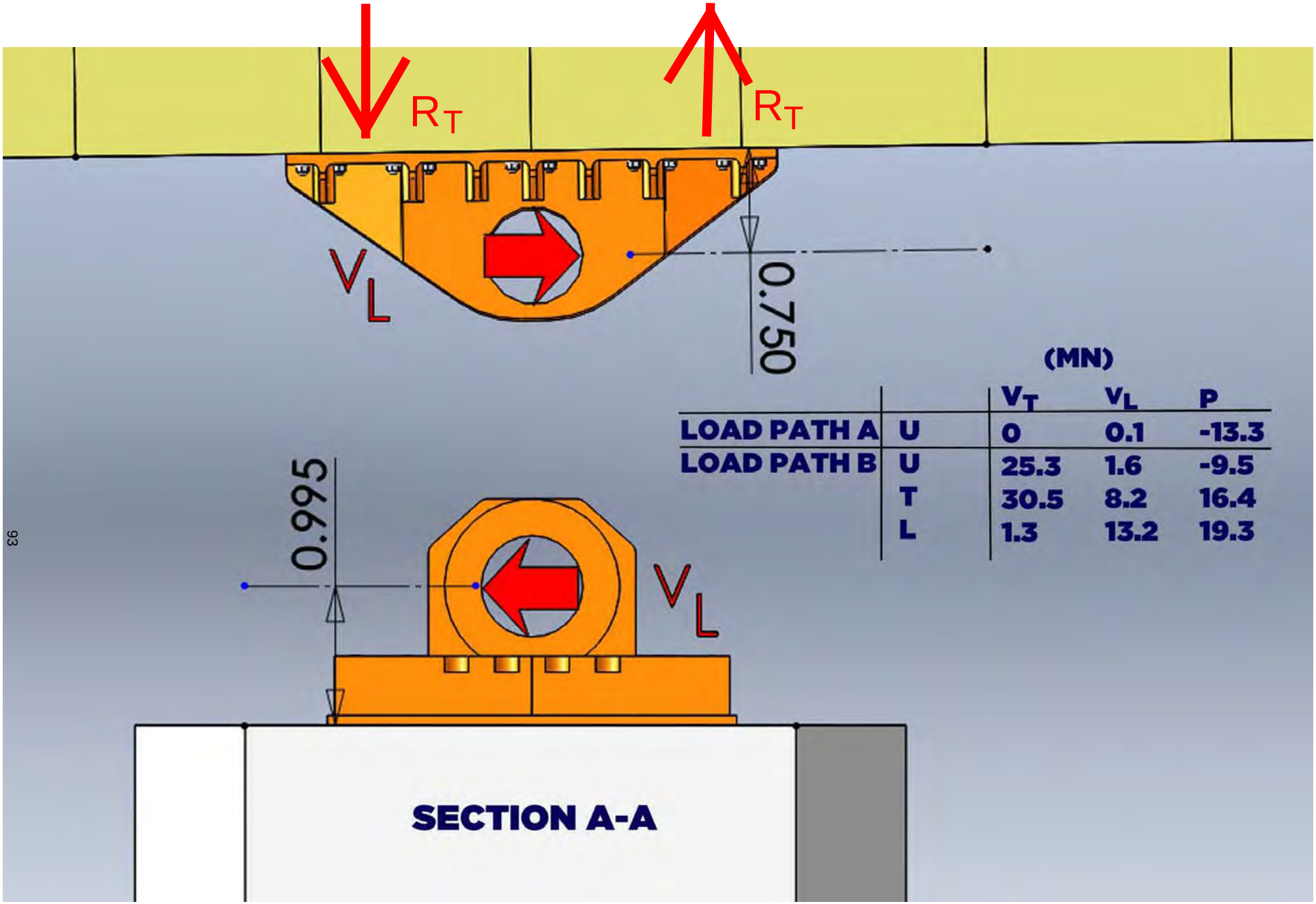

(MN)

		V_T	V_L	P
LOAD PATH A	U	0	0.1	-13.3
LOAD PATH B	U	25.3	1.6	-9.5
	T	30.5	8.2	16.4
	L	1.3	13.2	19.3

DIST.	COUNTY	ROUTE	KILOMETER POST TOTAL PROJECT	SHEET NO.	TOTAL SHEETS
04	SF	80	13.2/13.9	883	1204

REGISTERED ENGINEER - CIVIL

12-6-04

PLANS APPROVAL DATE

REGISTERED PROFESSIONAL ENGINEER Marwan N. Nader No. C 054426 Exp. 12/31/05 CIVIL STATE OF CALIFORNIA

The State of California or its officers or agents shall not be responsible for the accuracy or completeness of electronic copies of this plan sheet.

T.Y. LIN / MOFFATT & NICHOL
825 BATTERY STREET
SAN FRANCISCO, CA 94111

Caltrans now has a web site! To get to the web site, go to: http://www.dot.ca.gov

5

Caltrans Metric

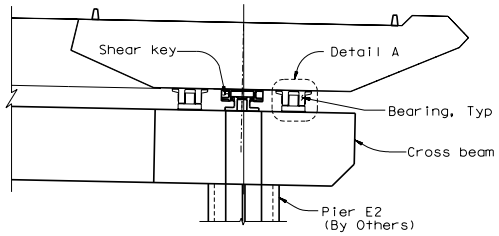

KEY ELEVATION
1:200

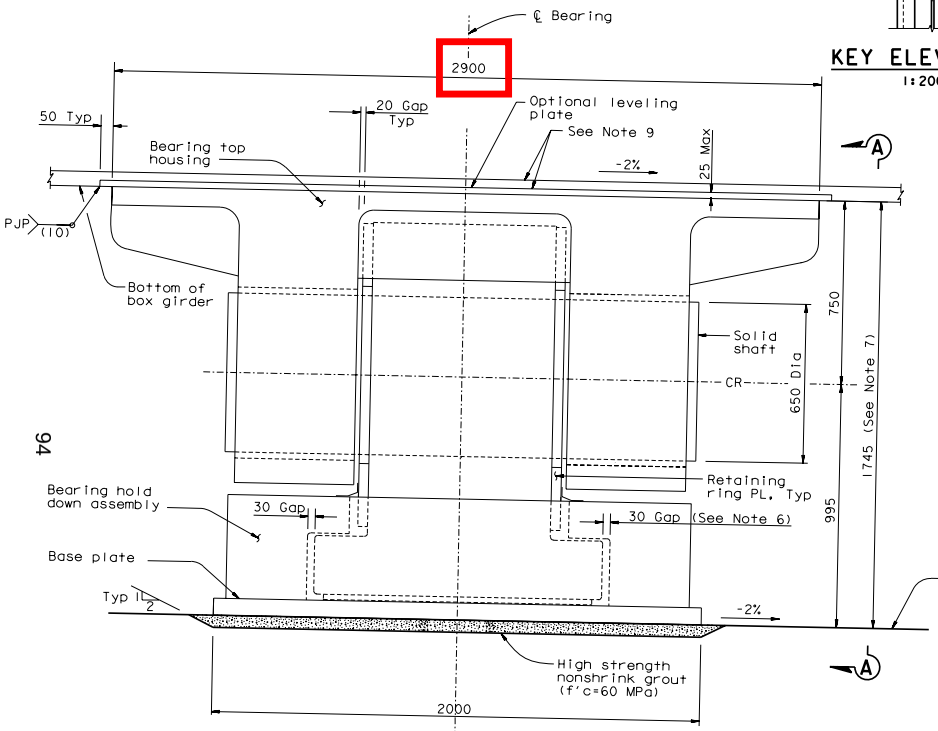

DETAIL A (Bearing Assembly)
1:10

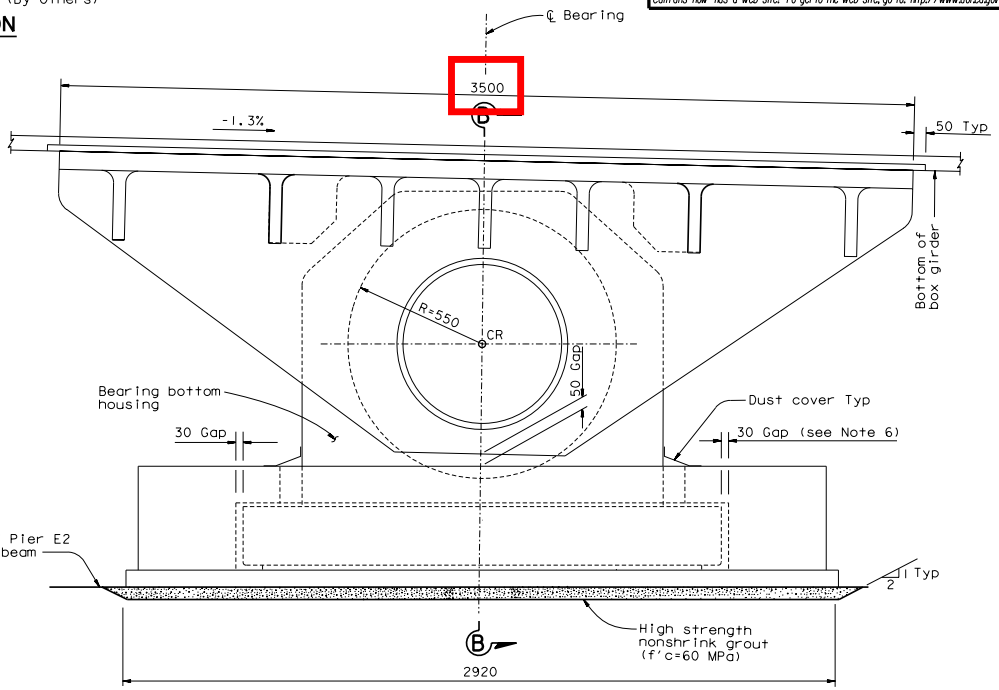

VIEW A-A
1:10

LEGEND:

CR Center of Rotation

5 REVISED PER ADDENDUM NO. 5 DATED DECEMBER 21, 2005

NOTES:

1. For Section B-B, see "Pier E2 Bearing Details No. 2" sheet.
2. Connections to box girder and Pier E2 are not shown for clarity.
3. The bearing top housing and bearing hold down assembly shall be Structural Casting Grade 345.
4. The bearing bottom housing and the solid shaft shall be Structural Casting Grade 550.
5. The grout pad thickness is shown for information only. Before grout pour, Contractor shall verify in the field the grout pad thickness required to align the center of rotation of the shear key and bearings at 0.750 m from the bottom surface of the box girder and ensure center of rotation of all bearings and shear keys are aligned in the same axis.
6. Gaps shall be maintained during installation by using shims placed below the dust cover locations. Remove shims after grouting.
7. The Contractor may provide optional leveling plates to achieve fit-up and level contact surfaces for the bearings and shear keys. The Contractor shall erect the E2 cap beam and E2 girders to the elevations and tolerances specified in the plans and special provisions.
8. Leveling plate shall be attached with 20 mm plug welds at 0.5 m Max spacing, and a perimeter PJP weld.
9. All faying surfaces of the girder key plate, the bearing top housing, and the optional leveling plate shall be machined after all welding for flatness and smoothness as specified for the top of the bearing top housing. See "Pier E2 Bearing Detail No. 3" sheet.

ALL DIMENSIONS ARE IN

SAN FRANCISCO OAKLAND BAY BRIDGE

Bearing Dimensions

R. Valizadeh/V. Toan/Y.L./W.L./F.C.
DESIGN OVERSIGHT
SIGN OFF DATE 12/07/05

DESIGN	BY M. Nader	CHECKED L. Rus	
DETAILS	BY N. Vo	CHECKED J. Leventini	
QUANTITIES	BY N. Vo	CHECKED J. Leventini	

PREPARED FOR THE STATE OF CALIFORNIA DEPARTMENT OF TRANSPORTATION

Rev. Date: 5-18-98

ORIGINAL SCALE IN MILLIMETERS FOR REDUCED PLANS 0 10 20 30 40 50 60 70 80 90 100

CU 04
EA 0120F1

DISREGARD PRINTS BEARING EARLIER REVISION DATES

REVISION DATES (PRELIMINARY STAGE ONLY) 05/24/05 09/26/05 12/21/05 12/07/05

SHEET 466 OF

FILE => I:\bb\04-012001\sas\contract plans and cco\addenda\addendum 5\akbrg01.dgn

USERNAME => ptran DATE PLOTTED => 19 MAR 2007 TIME PLOTTED => 10:50:18

100 % PS&E

Caltrans now has a web site! To get to the web site, go to: http://www.dot.ca.gov

Caltrans Metric

DIST.	COUNTY	ROUTE	KILOMETER POST TOTAL PROJECT	SHEET NO.	TOTAL SHEETS
04	SF	80	13.2/13.9	885R1	1204

REGISTERED ENGINEER - CIVIL

12-6-04

PLANS APPROVAL DATE

REGISTERED PROFESSIONAL ENGINEER Marwan N. Nader No. C 054426 Exp. 12/31/09 CIVIL STATE OF CALIFORNIA

The State of California or its officers or agents shall not be responsible for the accuracy or completeness of electronic copies of this plan sheet.

T.Y. LIN / MOFFATT & NICHOL
825 BATTERY STREET
SAN FRANCISCO, CA 94111

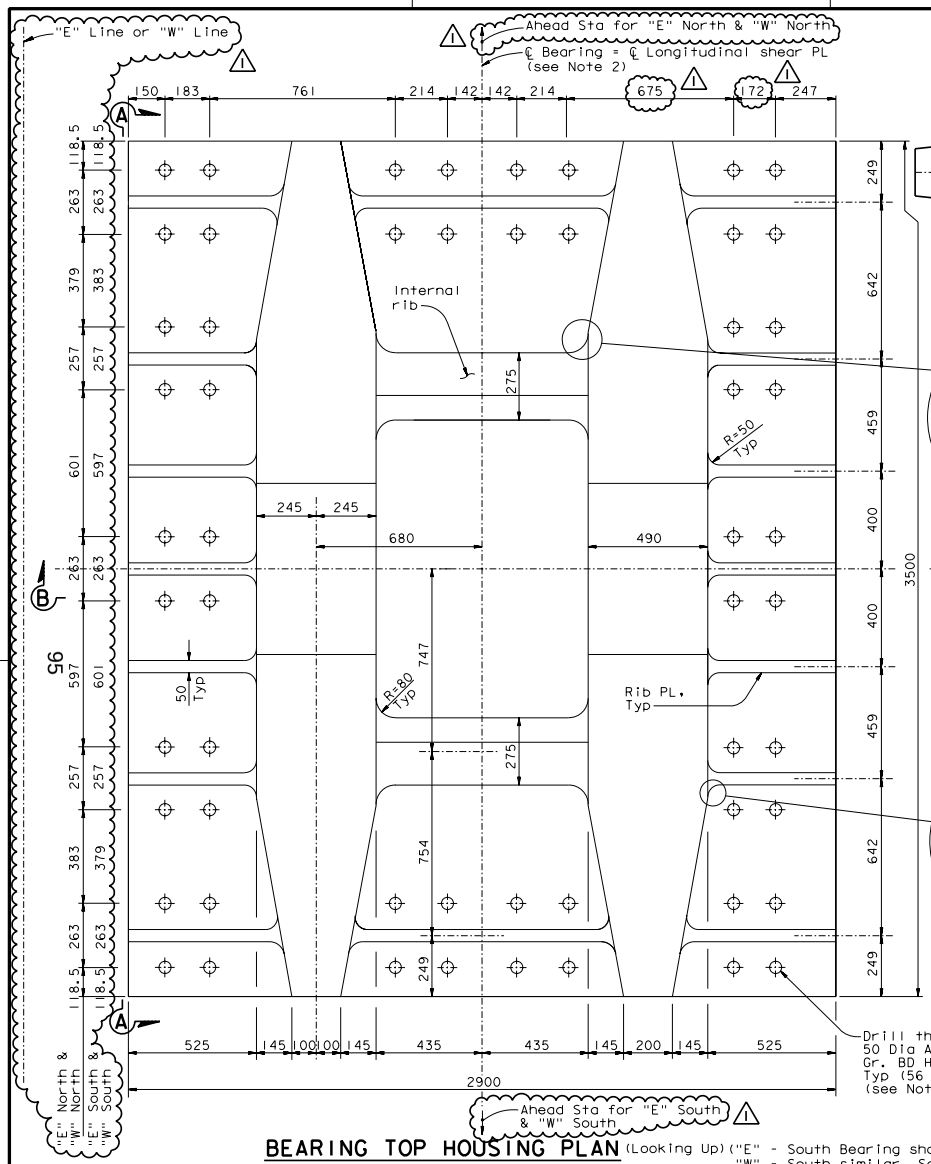

BEARING TOP HOUSING PLAN (Looking Up)

1:10

("E" - South Bearing shown. "W" - South similar. See Note 3 and 4)

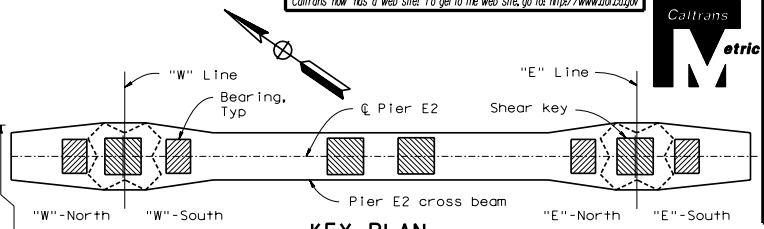

KEY PLAN

1:200

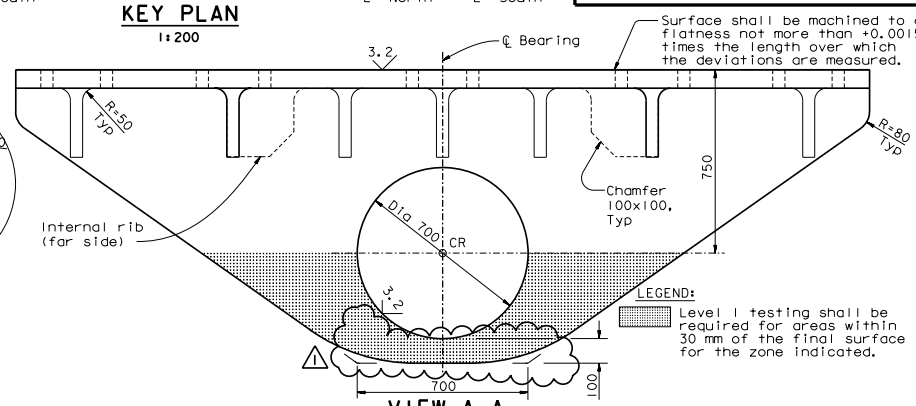

VIEW A-A

1:10

LEGEND:

Level I testing shall be required for areas within 30 mm of the final surface for the zone indicated.

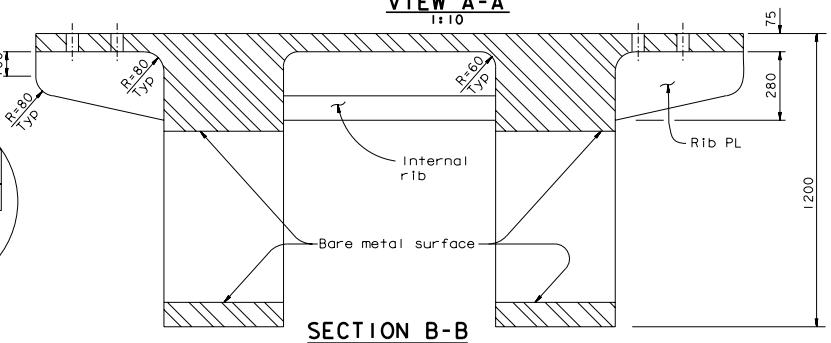

SECTION B-B

1:10

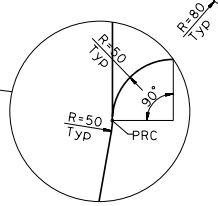

NOTES:

1. Solid shaft in bushings is press fit.
2. For longitudinal shear plate location on box girder, see "Girder At East Transition No.1" sheet.
3. "E"-South bearing and "W"-South bearing are similar. "E"-North bearing and "W"-North bearing are similar.
4. Bolt hole location shall be cross checked with the box girder stiffener layout before drilling holes. Bolt edge distance and clearance for tightening shall be verified and submitted for review and approval by the Engineer. A template shall be used to drill bolt holes in bearing top housing and girder key plate to ensure hole matching.
5. The anchor bolt shall be pretensioned to 70% of ultimate tensile strength.
6. At the Contractor's option, oversized holes and appropriate washer plates may be used in the bearing top housing.

REQUESTS FOR INFORMATION NOT ADDRESSED IN THIS CCO REMAIN IN FORCE

ALL DIMENSIONS ARE IN MILLIMETERS UNLESS OTHERWISE SHOWN

R. Valizadeh/V. Toan/Y.L./W.L./F.C.
DESIGN OVERSIGHT
Roya Valizadeh / Vong Toan / Y. Liu
SIGN OFF DATE 09/26/08

Rev. Date: 5-18-98

MARK	DATE	DESCRIPTIONS	BY	CH'D	CCO#
1	09/26/08	E2 CROSS BEAM	MN	NV	71

REVISIONS

CONTRACT CHANGE ORDER NO. ____
SHEET ___ OF ___

	BY	CHECKED
DESIGN	M. Nader	L. Rus
DETAILS	N. Vo	J. Leventini
QUANTITIES	N. Vo	J. Leventini

ORIGINAL SCALE IN MILLIMETERS FOR REDUCED PLANS 0 10 20 30 40 50 60 70 80 90 100

PREPARED FOR THE STATE OF CALIFORNIA DEPARTMENT OF TRANSPORTATION

R. Manzanarez
PROJECT ENGINEER

CU 04
EA 0120F1

BRIDGE NO. 34-0006L/R
KILOMETER POST 13.2/13.9

SAN FRANCISCO OAKLAND BAY BRIDGE
EAST SPAN SEISMIC SAFETY PROJECT
SELF-ANCHORED SUSPENSION BRIDGE
(SUPERSTRUCTURE & TOWER)

PIER E2 BEARING DETAILS NO. 3

DISREGARD PRINTS BEARING EARLIER REVISION DATES

REVISION DATES (PRELIMINARY STAGE ONLY) 01/07/99 05/31/01 06/08/02 01/09/02 12/13/02 10/15/03 12/01/05

SHEET 468R1 OF

FILE => I:\bb\04-012001\sas\contract plans and cco\cco\in progress\cco=71\original 09-26-08\dgn\akbrg03.dgn

100 % PS&E

DATE PLOTTED => 08 OCT 2008 TIME PLOTTED => 15:38:09

USERNAME => ptom

DIST.	COUNTY	ROUTE	KILOMETER POST TOTAL PROJECT	SHEET NO.	TOTAL SHEETS
04	SF	80	13.2/13.9	677	1204

George Baker
REGISTERED ENGINEER - CIVIL
12-6-04
PLANS APPROVAL DATE

REGISTERED PROFESSIONAL ENGINEER George S. Baker No. C57112 Exp. 12/31/05 CIVIL STATE OF CALIFORNIA

The State of California or its officers or agents shall not be responsible for the accuracy or completeness of electronic copies of this plan sheet.

T.Y. LIN / MOFFATT & NICHOL
825 BATTERY STREET
SAN FRANCISCO, CA 94111

Caltrans now has a web site! To get to the web site, go to: http://www.dot.ca.gov

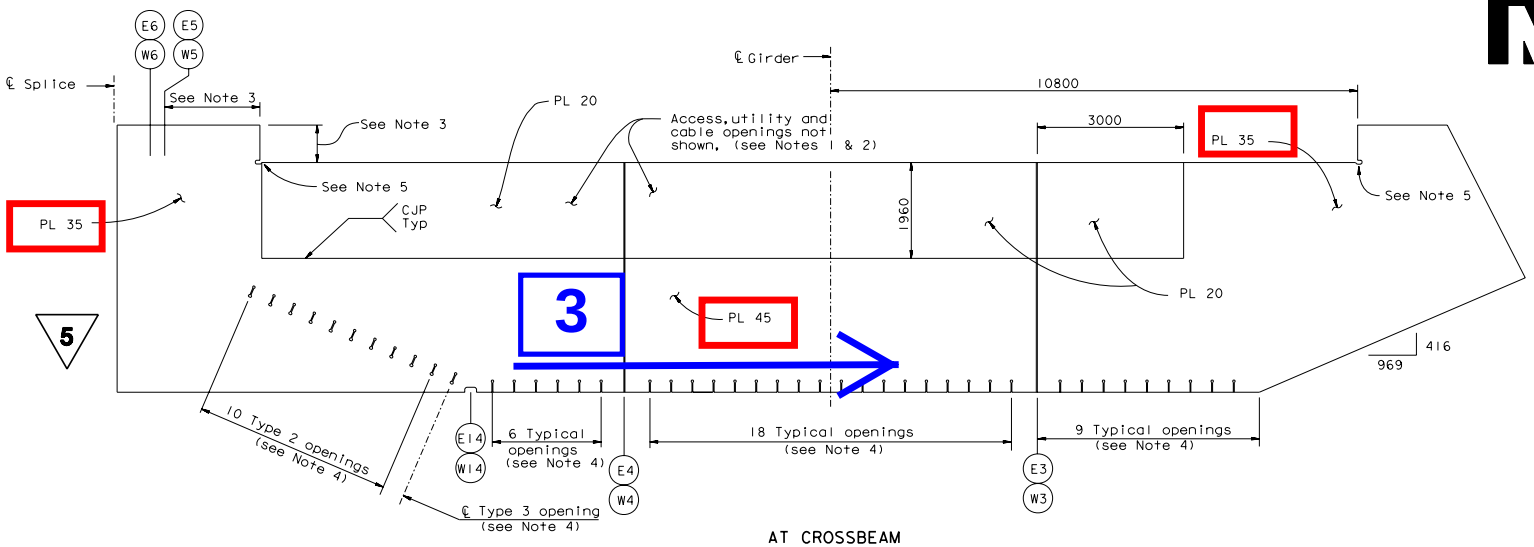

AT CROSSBEAM
FLOORBEAM WEB LAYOUT
1:50

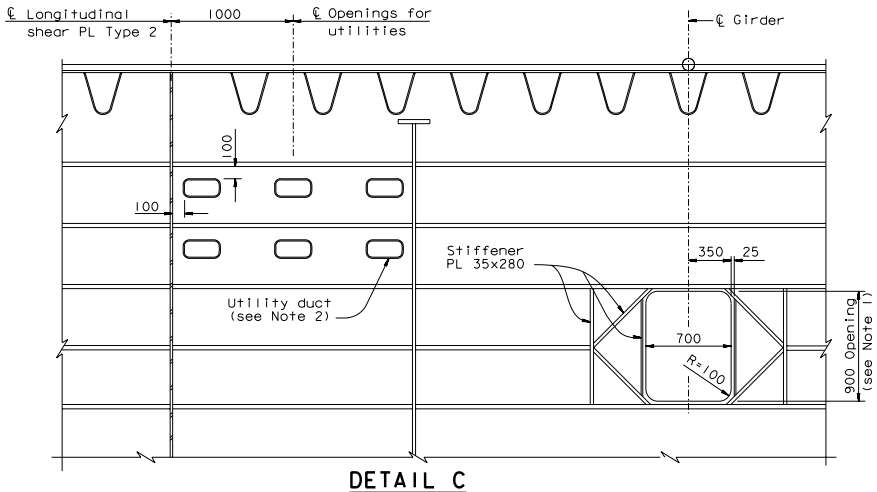

DETAIL C
1:20

NOTES:

1. For opening details not shown, see "Typical Girder Details No. 7" sheets.
2. For utility details not shown, see "Utility Details" sheets.
3. For dimensions not shown, see "Partial Typical Sections", "Typical Girder Details" and "Girder At Pier E2 No. 1" sheets.
4. For stiffener cutouts, see "Typical Girder Details No. 3", "Typical Girder Details No. 5" and "Typical Girder Details No. 6" sheets.
5. For cutout detail, see "Typical Floorbeam Details No. 3" sheet.

5 **REVISED PER ADDENDUM NO. 5 DATED DECEMBER 21, 2005**

ALL DIMENSIONS ARE IN

SAN FRANCISCO-OAKLAND BAY BRIDGE

Floorbeam Web - Shear Check

R. Valizadeh/V. Toan/Y.L./W.L./F.C.
DESIGN OVERSIGHT
SIGN OFF DATE 12/07/05

DESIGN
DETAILS
QUANTITIES

Rev. Date: 5-18-98

ORIGINAL SCALE IN MILLIMETERS FOR REDUCED PLANS 0 10 20 30 40 50 60 70 80 90 100

CU 04
EA 0120F1

DISREGARD PRINTS BEARING EARLIER REVISION DATES

REVISION DATES (PRELIMINARY STAGE ONLY)
5/15/98 05/07/99 05/07/01 04/08/02 07/01/02 12/16/02 12/07/05

SHEET 260 OF

FILE => I:\bb\04-012001\sas\contract plans and cco\addenda\addendum 5\aggdd09.dgn

USERNAME => ptom DATE PLOTTED => 19 MAR 2007 TIME PLOTTED => 11:43:09

100 % PS&E

96

DIST.	COUNTY	ROUTE	KILOMETER POST TOTAL PROJECT	SHEET NO.	TOTAL SHEETS
04	SF	80	13.2/13.9	675	1204

George Baker
REGISTERED ENGINEER - CIVIL
12-6-04
PLANS APPROVAL DATE

REGISTERED PROFESSIONAL ENGINEER George S. Baker No. C57112 Exp. 12/31/05 CIVIL STATE OF CALIFORNIA

The State of California or its officers or agents shall not be responsible for the accuracy or completeness of electronic copies of this plan sheet.

T.Y. LIN / MOFFATT & NICHOL
825 BATTERY STREET
SAN FRANCISCO, CA 94111

Caltrans now has a web site! To get to the web site, go to: http://www.dot.ca.gov

Caltrans Metric

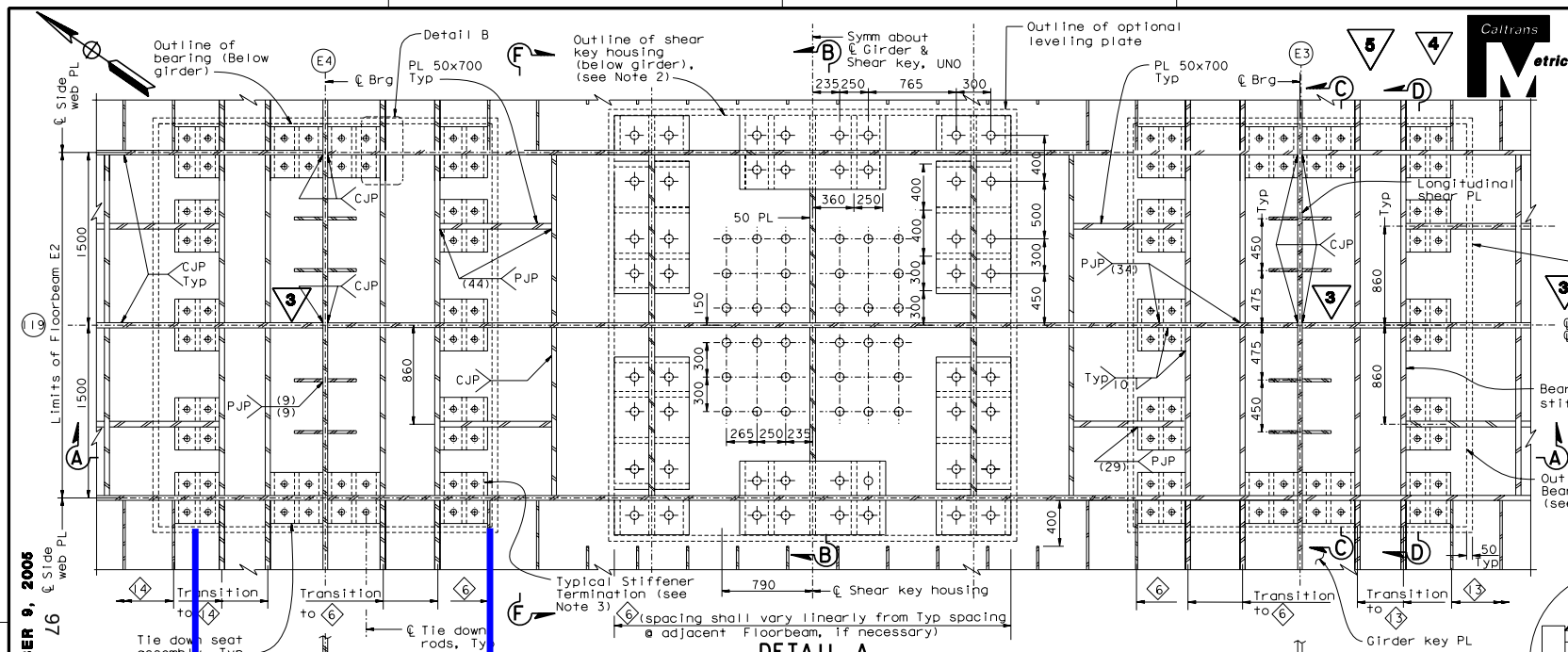

DETAIL A
1:20

LEGEND
- 75 Dia anchor bolt (A354 Gr. BD)
- 64 Dia anchor bolt (A354 Gr. BD)
- 29 Dia anchor bolt (A354 Gr. BD)
- 50 Dia anchor bolt (A354 Gr. BD)
- t - thickness of terminating plate in T-joint

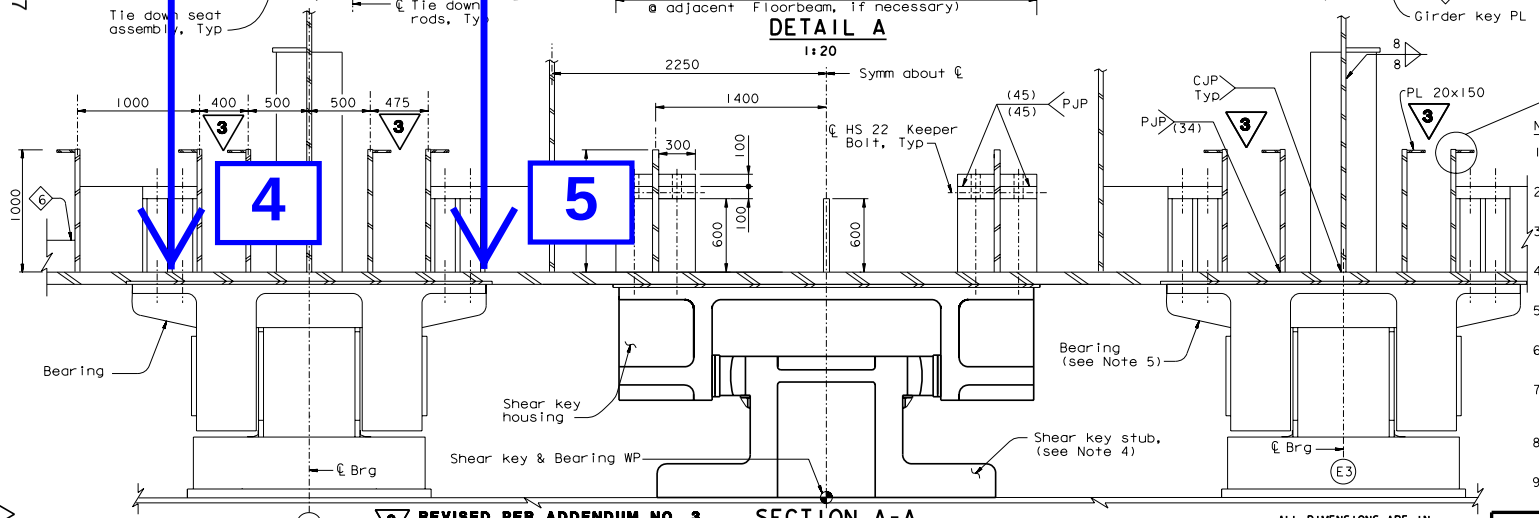

SECTION A-A
1:20

NOTES:
1. For girder plate thickness, see "Typical Girder Details No.1" sheet.
2. For details of shear key housing, see "Pier E2 Shear Key" sheets.
3. For typical girder stiffener termination, see "Typical Girder Details No.16" sheet.
4. For details of shear key, see "Pier E2 Shear Key Details" sheets.
5. For details of bearing, see "Pier E2 Bearing Details" sheets.
6. For Section F-F, see "Girder At Pier E2 No.6" sheet.
7. For bolt and rod locations, see "Pier E2 Shear Key Details" and "Pier E2 Bearing Details" sheets.
8. For Pier E2 bearing and shear key location, see "Pier E2 Bearing And Shear Key Layout" sheet.
9. For Section B-B, C-C, D-D and detail B, see "Girder At Pier E2 No.3" sheet.

4 REVISED PER ADDENDUM NO. 4 DATED DECEMBER 9, 2005

3 REVISED PER ADDENDUM NO. 3 DATED NOVEMBER 7, 2005

5 REVISED PER ADDENDUM NO. 5 DATED DECEMBER 21, 2005

ALL DIMENSIONS ARE IN MILLIMETERS UNLESS OTHERWISE SHOWN

R. Valizadeh/V. Toan/Y.L./W.L./F.C.
DESIGN OVERSIGHT
SIGN OFF DATE 12/07/05

	BY	CHECKED
DESIGN	G. Baker	P. Ritchie
DETAILS	C. Mauch	T. McMeans
QUANTITIES	D. Turner	M. Roberts

PREPARED FOR THE STATE OF CALIFORNIA DEPARTMENT OF TRANSPORTATION

R. Manzanarez
PROJECT ENGINEER

BRIDGE NO. 34-0006L/R
KILOMETER POST 13.2/13.9

SAN FRANCISCO OAKLAND BAY BRIDGE
EAST SPAN SEISMIC SAFETY PROJECT
SELF-ANCHORED SUSPENSION BRIDGE (SUPPERSTRUCTURE & TOWER)

GIRDER AT PIER E2 NO.2

Rev. Date: 5-18-98

ORIGINAL SCALE IN MILLIMETERS FOR REDUCED PLANS 0 10 20 30 40 50 60 70 80 90 100

CU 04
EA 0120F1

DISREGARD PRINTS BEARING EARLIER REVISION DATES

REVISION DATES (PRELIMINARY STAGE ONLY) 05/05/99 05/04/99 05/04/01 06/08/02 07/01/02 11/14/02 10/13/05 11/15/05 12/01/05

SHEET 258 OF

FILE => I:\bb\04-012001\sas\contract plans and cco\addenda\addendum 5\aggdd07.dgn

USERNAME => ptom DATE PLOTTED => 19 MAR 2007 TIME PLOTTED => 11:45:24

100 % PS&E

DIST.	COUNTY	ROUTE	KILOMETER POST TOTAL PROJECT	SHEET NO.	TOTAL SHEETS
04	SF	80	13.2/13.9	676	1204

George Baker
REGISTERED ENGINEER - CIVIL
12-6-04
PLANS APPROVAL DATE

REGISTERED PROFESSIONAL ENGINEER George S. Baker No. C 57112 Exp. 12/31/05 CIVIL STATE OF CALIFORNIA

The State of California or its officers or agents shall not be responsible for the accuracy or completeness of electronic copies of this plan sheet.

T.Y. LIN / MOFFATT & NICHOL
825 BATTERY STREET
SAN FRANCISCO, CA 94111

Caltrans now has a web site! To get to the web site, go to: http://www.dot.ca.gov

Caltrans Metric

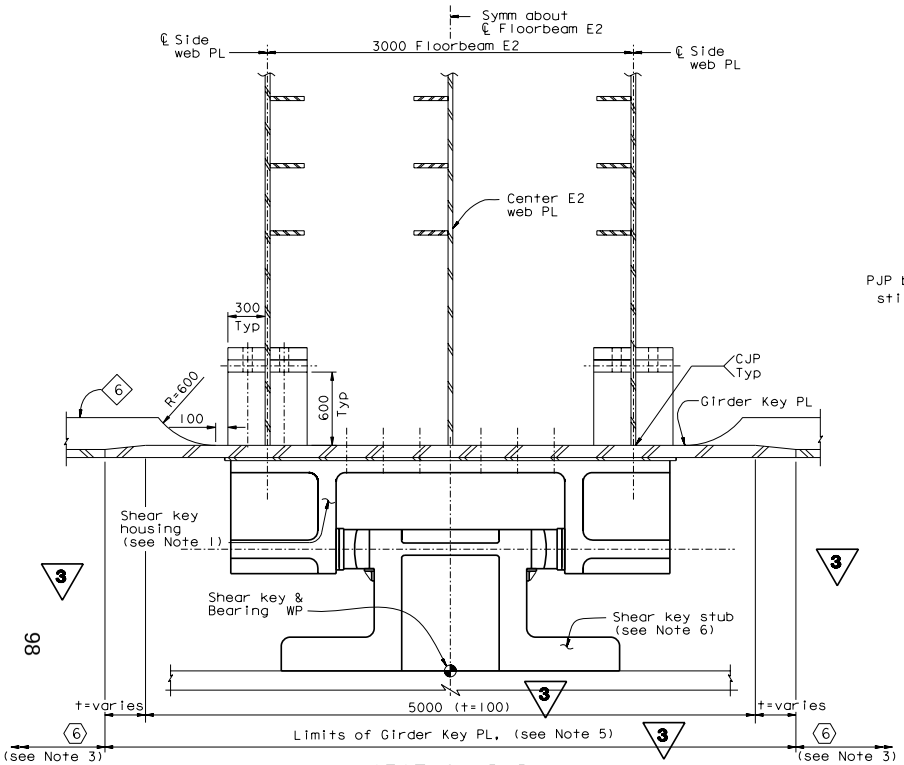

SECTION B-B
1:20

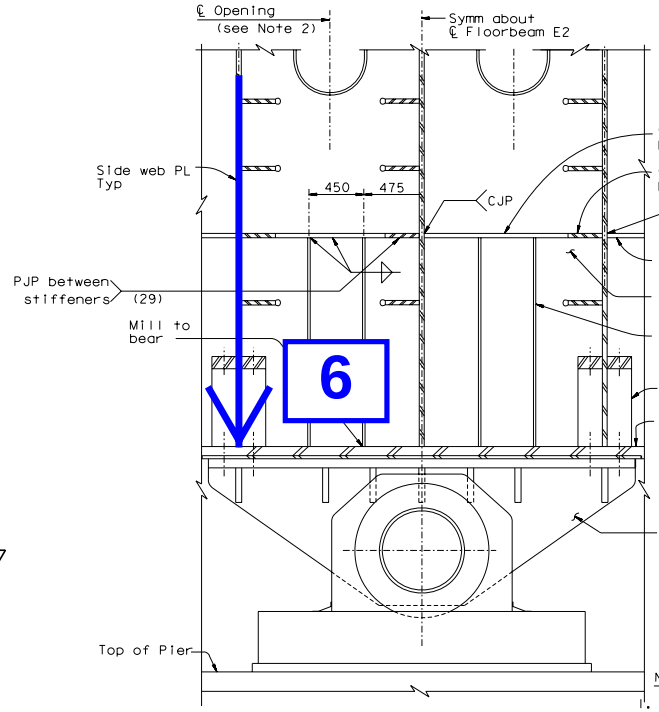

SECTION C-C
1:20

DETAIL B - ALTERNATIVE STIFFENER WELD
1:10

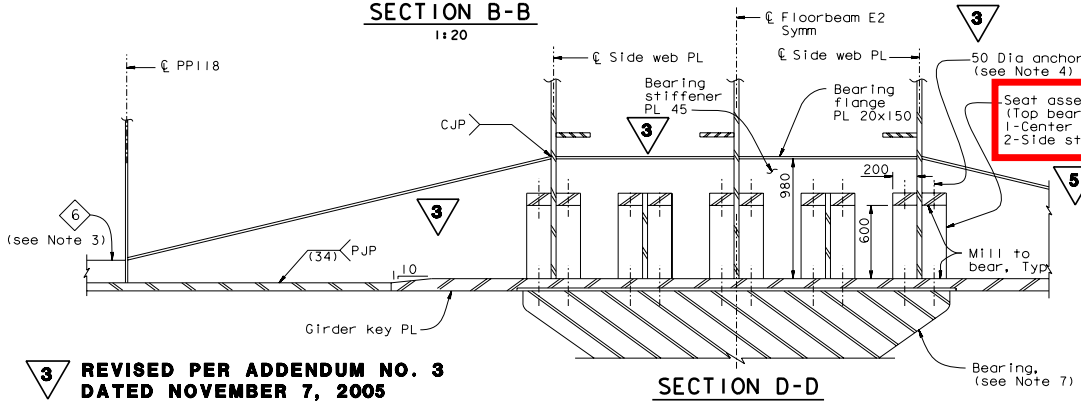

SECTION D-D
1:20

5 REVISED PER ADDENDUM NO. 5 DATED DECEMBER 21, 2005

NOTES:

1. For shear key housing details, see "Pier E2 Shear Key Details" sheet.
2. For opening details, see "Typical Girder Details No. 7" sheet.
3. For typical girder details not shown, see "Typical Girder Details" sheets.
4. For anchor bolt, see "Pier E2 Bearing Details" sheets.
5. For transverse limits of girder key PL, see "Girder At Pier E2 No. 1" sheet.
6. For shear key details, see "Pier E2 Shear Key Details" sheets.
7. For Pier E2 bearing details, see "Pier E2 Bearing Details" sheets.
8. For bearing stiffeners in faying contact with diaphragms or webs, stiffener corners and welds may be ground to allow fit-up.
9. Leveling plate may be used to compensate for the permissible out-of-flatness of the girder key plate. Leveling plates shall be tapered as required to ensure proper alignment of the bearings and shear keys in both longitudinal and transverse directions.

3 REVISED PER ADDENDUM NO. 3 DATED NOVEMBER 7, 2005

4 REVISED PER ADDENDUM NO. 4 DATED DECEMBER 9, 2005

ALL DIMENSIONS ARE IN MILLIMETERS UNLESS OTHERWISE SHOWN

R. Valizadeh/V. Toan/Y.L./W.L./F.C.
DESIGN OVERSIGHT
SIGN OFF DATE 12/07/05

DESIGN	BY G. Baker	CHECKED P. Ritchie	
DETAILS	BY C. Mauch	CHECKED T. McMeans	
QUANTITIES	BY D. Turner	CHECKED M. Roberts	

PREPARED FOR THE STATE OF CALIFORNIA DEPARTMENT OF TRANSPORTATION

R. Manzanarez
PROJECT ENGINEER

BRIDGE NO. 34-0006L/R
KILOMETER POST 13.2/13.9

SAN FRANCISCO OAKLAND BAY BRIDGE
EAST SPAN SEISMIC SAFETY PROJECT
SELF-ANCHORED SUSPENSION BRIDGE (SUPERSTRUCTURE & TOWER)

GIRDER AT PIER E2 NO. 3

Rev. Date: 5-18-98

ORIGINAL SCALE IN MILLIMETERS FOR REDUCED PLANS 0 10 20 30 40 50 60 70 80 90 100

CU 04
EA 0120F1

DISREGARD PRINTS BEARING EARLIER REVISION DATES

REVISION DATES (PRELIMINARY STAGE ONLY) 3/15/96 03/27/96 09/27/96 03/06/02 12/07/02 12/18/02 11/23/05 12/01/05

SHEET 259 OF

FILE => I:\bb\04-012001\sas\contract plans and cco\addenda\addendum 5\aggdd08.dgn

USERNAME => ptom DATE PLOTTED => 19 MAR 2007 TIME PLOTTED => 11:44:14

100 % PS&E

OBG Plates at Bearings

stresses neglect global OBG stresses

Formulas

		Reference	Comment
Steel Plate Properties			
Fy	345 MPa	Sheet 423	
E	200,000 MPa		
Force Applied to OBG per Bearing			
Transverse	30.5 MN	Sheet 882A	
Longitudinal	13.3 MN	Sheet 882A	
1) Key Plate			
Transverse dimension	2900 mm		
Longitudinal dimension	5000 mm	Sheet 676	
t	85 mm	Sheet 676	TC-RFI-34R1 allows key plate to be milled to 85mm
Axial Check			
1A) Longitudinal Axial Capacity	146.6 MN		
Longitudinal Axial Demand	13.3 MN		
D/C	**0.09**		
1B) Transverse Axial Capacity	85.0 MN		
Transverse Axial Demand	30.5 MN		
D/C	**0.36**		
2) Longitudinal Shear Plates			
t	25 mm	Sheet 691	
Longitudinal dimension	3500 mm	Sheet 883	
Shear Check			
Design Shear Capacity	17.5 MN		
Shear Demand	13.3 MN		
D/C	**0.76**		
3) Floorbeam Webs			
t	35 mm	Sheet 677	
Transverse dimension	2900 mm	Sheet 883	
no. of webs	3		
Shear Check			
Design Shear Capacity	60.9 MN		
Shear Demand	30.5 MN		
D/C	**0.50**		

Bearing to OBG Bolted Connection

Formulas

			Reference	Comment
Steel Plate Properties				
Fy	345	MPa	Sheet 423	
E	200,000	MPa		
F_{exx}	483	MPa		
Anchor Bolt Properties				
Diameter	50	mm	Sheet 675	
Tensile Strength	375	kips	ASTM A354	
	1674	kN		
Prestress	1.0	Fu		
Pretension	1.67	MN		
4) Vertical Stiffeners - Middle				
D	550	mm	Sheet 676	50mm cope hole at bottom
b	200	mm	Sheet 676	
t	40	mm	Sheet 676	
Load on Stiffener	1.67	MN		Middle stiffener reaction = 2 rods x 50%
- Axial Check				
r	11.5	mm		
kL/r	47.6			
sqrt (2 x π^2 x E / Fy)	107.0			
F_{cr}	311	MPa	BDS 10-152	
Design Axial Strength	2.11	MN	BDS 10-150	**OK**
D/C	0.79			
- Shear Check				
D/t_w	13.8			
6000 x sqrt(k) / sqrt F_y	323.0			
C	1.0			
Design Shear Strength	4.40	MN	BDS 10-115	**OK**
D/C	0.38			
Weld Check				
PJP (E) Web to Stiff	34	mm		
Weld Factored Resistance	232	MPa		
Design Weld Strength	4.34	MN		**OK**
D/C	0.39			
- Bearing Check				
Allowable	466	MPa	BDS 10.48.7	$1.35F_y$
Bearing Strength	3.73	MN		**OK**
D/C	0.45			

5) Vertical Stiffeners - Side

D	550	mm	Sheet 676	50mm cope hole at bottom
b	200	mm	Sheet 676	
t	35	mm	Sheet 676	
Load on Stiffener	0.84	MN		Side stiffener reaction = 1 rod x 50%
- Axial Check				
r	10.1	mm		
kL/r	54.4			
sqrt (2 x π^2 x E / Fy)	107.0			
F_{cr}	311	MPa	BDS 10-152	
Design Axial Strength	1.85	MN	BDS 10-150	**OK**
D/C	0.45			
- Shear Check				
D/t_w	15.7			
6000 x sqrt(k) / sqrt F_y	323.0			
C	1.0			
Design Shear Strength	3.85	MN	BDS 10-115	**OK**
D/C	0.22			
Weld Check				
PJP (E) Web to Stiff	29	mm		
Weld Factored Resistance	232	MPa		
Design Weld Strength	3.70	MN		**OK**
D/C	0.23			
- Bearing Check				
Allowable	466	MPa	BDS 10.48.7	1.35F_y
Bearing Strength	3.26	MN		**OK**
	0.26			

6) Floorbeam Web

D	550	mm	Sheet 676	
t	35	mm	Sheet 677	
Load on Web	3.35	MN		50% reaction from 4 rods
Shear Tearout of Web				
Shear Capacity of Web	3.85	MN		**OK**
D/C	0.87			

Appendix 3C

Design Drawings

Orthotropic Box Girder at Pier E2, Crossbeam at Pier E2, Bearing and Shear Key Details

DIST.	COUNTY	ROUTE	KILOMETER POST TOTAL PROJECT	SHEET NO.	TOTAL SHEETS
04	SF	80	13.2/13.9	674R1	1204

George Baker
REGISTERED ENGINEER - CIVIL
12-6-04
PLANS APPROVAL DATE

REGISTERED PROFESSIONAL ENGINEER George S. Baker No. C 57112 Exp. 12/31/05 CIVIL STATE OF CALIFORNIA

The State of California or its officers or agents shall not be responsible for the accuracy or completeness of electronic copies of this plan sheet.

T.Y. LIN / MOFFATT & NICHOL
825 BATTERY STREET
SAN FRANCISCO, CA 94111

Caltrans now has a web site! To get to the web site, go to: http://www.dot.ca.gov

Caltrans Metric

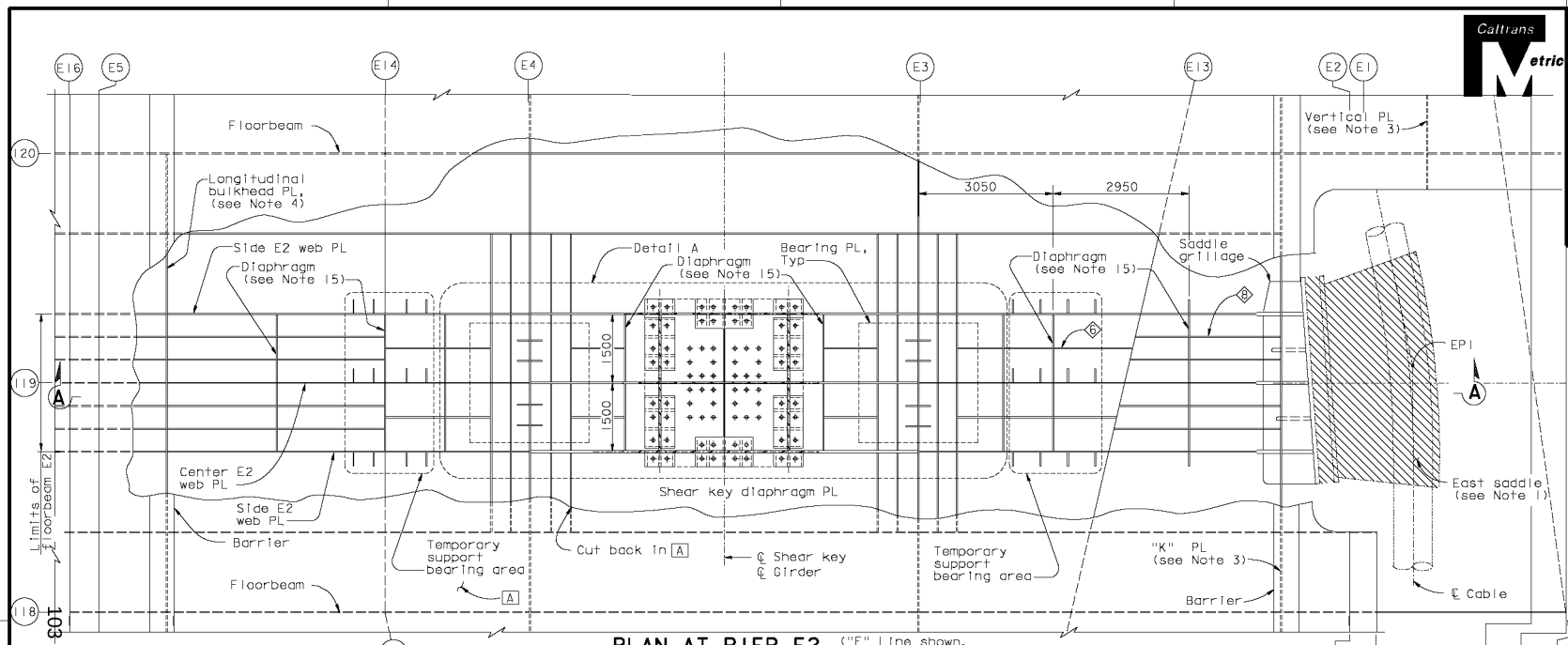

PLAN AT PIER E2

1:50

("E" Line shown, "W" Line similar)

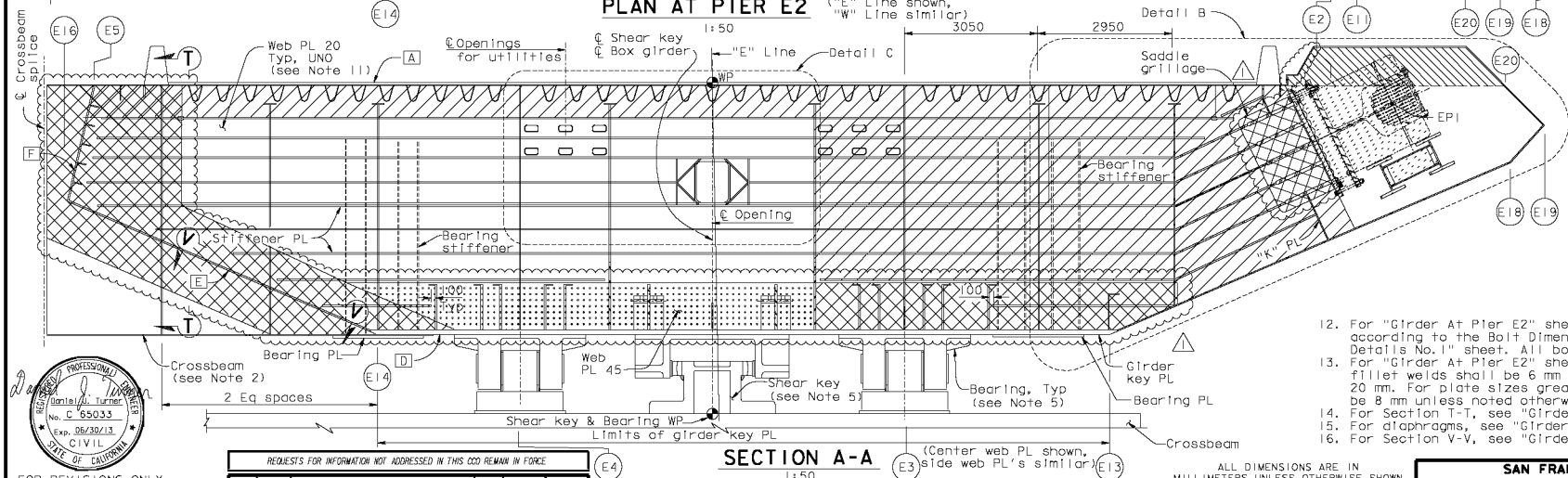

SECTION A-A

1:50

(Center web PL shown, side web PL's similar)

LEGEND:

- East saddle (see Note 1)
- Saddle housing (see Note 7)
- "Indicates SPCM web PL"
- "Indicates TTP web PL"
- "Indicates SPCM & TTP web PL"

NOTES:

1. For saddle details, see "East Saddle Details" sheets.
2. For crossbeam, see "Crossbeam At Pier E2" sheets.
3. For "K" PL and vertical PL details, see "Girder At East Transition Details" sheets.
4. For longitudinal bulkhead PL details, see "Girder At Pier E2 No.9" sheet.
5. For shear key & bearing details, see "Pier E2 Shear Key Details" and "Pier E2 Bearing Details" sheets.
6. For clarity, typical girder stiffeners are not shown in plan.
7. For saddle housing details, see "Saddle Housing Details" sheets.
8. For Detail A, see "Girder At Pier E2 No.2" sheet.
9. For Detail B, see "Girder At Pier E2 No.5" sheet.
10. For Detail C, see "Girder At Pier E2 No.4" sheet.
11. For E2 floorbeam web layout, see "Girder At Pier E2 No.4" sheet.
12. For "Girder At Pier E2" sheets, all bolts shall be detailed according to the Bolt Dimension Table. See "Typical Girder Details No.1" sheet. All bolts are HS unless noted otherwise.
13. For "Girder At Pier E2" sheets, unless noted otherwise, all fillet welds shall be 6 mm for plate sizes not greater than 20 mm. For plate sizes greater than 20 mm, fillet welds shall be 8 mm unless noted otherwise.
14. For Section T-T, see "Girder At Pier E2 No.9" sheet.
15. For diaphragms, see "Girder At Pier E2 No.6" sheet.
16. For Section V-V, see "Girder at Pier E2 No.9" sheet.

ALL DIMENSIONS ARE IN MILLIMETERS UNLESS OTHERWISE SHOWN

REGISTERED PROFESSIONAL ENGINEER Daniel J. Turner No. C 65033 Exp. 06/30/13 CIVIL STATE OF CALIFORNIA

FOR REVISIONS ONLY

REQUESTS FOR INFORMATION NOT ADDRESSED IN THIS CCO REMAIN IN FORCE

MARK	DATE	DESCRIPTIONS	BY	CH'D	CCO#
1	03/09/12	EAST END DBG	DT	GB	87

REVISIONS

CONTRACT CHANGE ORDER NO. ____
SHEET ___ OF ___

R. Valizadeh/V. Toan/Y.L./W.L./F.C.
DESIGN OVERSIGHT
Reza Valizadeh / Vong Toan / Y. Liu
SIGN OFF DATE 03/09/12

Rev. Date: 5-18-98

	BY	CHECKED
DESIGN	G. Baker	P. Ritchie
DETAILS	C. Mauch	T. McMeans
QUANTITIES	D. Turner	M. Roberts

PREPARED FOR THE STATE OF CALIFORNIA DEPARTMENT OF TRANSPORTATION

R. Manzanarez
PROJECT ENGINEER

BRIDGE NO. 34-0006L/R
KILOMETER POST 13.2/13.9

SAN FRANCISCO OAKLAND BAY BRIDGE
EAST SPAN SEISMIC SAFETY PROJECT
SELF-ANCHORED SUSPENSION BRIDGE
(SUPERSTRUCTURE & TOWER)

GIRDER AT PIER E2 NO. 1

ORIGINAL SCALE IN MILLIMETERS FOR REDUCED PLANS 0 10 20 30 40 50 60 70 80 90 100

CU 04
EA 0120F1

DISREGARD PRINTS BEARING EARLIER REVISION DATES

REVISION DATES (PRELIMINARY STAGE ONLY) 05/15/98 05/28/98 06/26/98 07/29/98 11/14/98 12/04/98 11/30/98 12/07/98

SHEET 257R1 OF

FILE => I:\bb\04-012001\sas\contract plans and cco\cco\cco*87\2-update 03-09-12\dgn\aggdd06.dgn

USERNAME => DWitrow DATE PLOTTED => 09 MAR 2012 TIME PLOTTED => 10:01:51

100 % PS&E

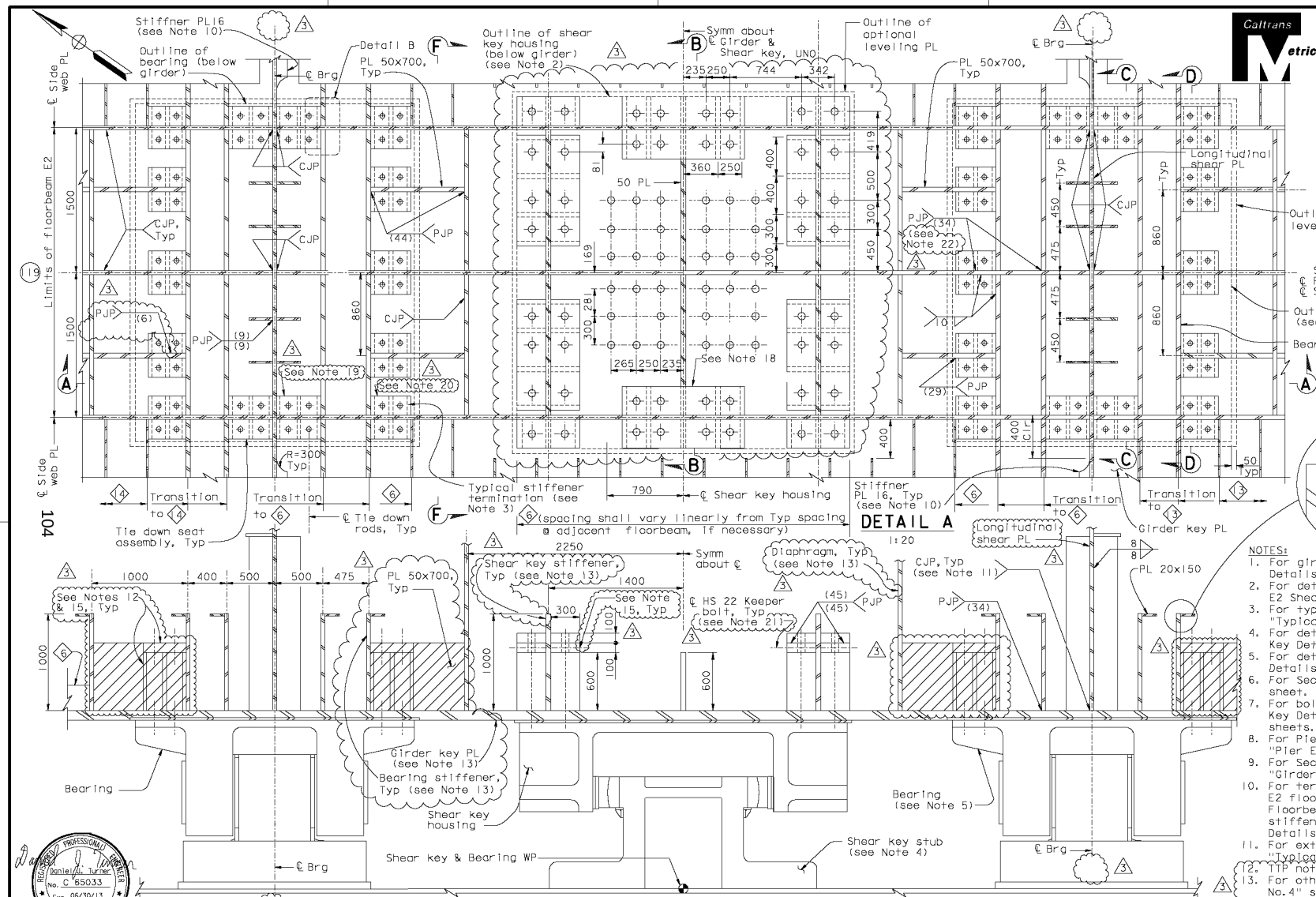

DETAIL A
1:20

SECTION A-A
1:20

DIST.	COUNTY	ROUTE	KILOMETER POST TOTAL PROJECT	SHEET NO.	TOTAL SHEETS
04	SF	80	13.2/13.9	675R3	1204

George Baker
REGISTERED ENGINEER - CIVIL
12-6-04
PLANS APPROVAL DATE

The State of California or its officers or agents shall not be responsible for the accuracy or completeness of electronic copies of this plan sheet.

T.Y. LIN / MOFFATT & NICHOL
825 BATTERY STREET
SAN FRANCISCO, CA 94111

Caltrans now has a web site! To get to the web site, go to: http://www.dot.ca.gov

LEGEND
- 75 Dia anchor bolt (A354 Gr. BD) (see Note 15)
- 50 Dia anchor bolt (A354 Gr. BD) (see Note 15)
- Thickness of terminating PL in T-joint
- "Indicates TTP Web PL"

NOTES:
1. For girder PL thickness, see "Typical Girder Details No.1" sheet.
2. For details of shear key housing, see "Pier E2 Shear Key" sheets.
3. For typical girder stiffener termination, see "Typical Girder Details No.16" sheet.
4. For details of shear key, see "Pier E2 Shear Key Details" sheets.
5. For details of bearing, see "Pier E2 Bearing Details" sheets.
6. For Section F-F, see "Girder At Pier E2 No.6" sheet.
7. For bolt and rod locations, see "Pier E2 Shear Key Details" and "Pier E2 Bearing Details" sheets.
8. For Pier E2 bearing and shear key location, see "Pier E2 Bearing And Shear Key Layout" sheet.
9. For Sections B-B, C-C, D-D and Detail B, see "Girder At Pier E2 No.3" sheet.
10. For termination of stiffener PL 16 at E2 floorbeam, see Detail G on "Typical Floorbeam Details No.4" sheet. For other stiffener details, see "Typical Girder Details No.7" sheet.
11. For extent of CJP weld, see Note 12 on "Typical Girder Details No.7" sheet.
12. TTP not required for seat assembly, Typ.
13. For other TTP plates, see " General Notes No.4" sheet.
14. For Notes 15 and above, see "Girder at Pier E2 No. 2A" sheet.

FOR REVISIONS ONLY

CONTRACT CHANGE ORDER NO. ____
SHEET ___ OF ___

REQUESTS FOR INFORMATION NOT ADDRESSED IN THIS CCO REMAIN IN FORCE

ALL DIMENSIONS ARE IN MILLIMETERS UNLESS OTHERWISE SHOWN

MARK	DATE	DESCRIPTIONS	BY	CH'D	CCO#
3	03/09/12	EAST END OBG	DT	GB	87
2	07/31/09	LONGITUDINAL SHEAR PLATE	DT	GB	122
1	07/30/07	HINGE A REACTION-SHEAR PLATES	DT	GB	50

REVISIONS

R. Valizadeh/V. Toan/Y.L./W.L./F.C.
DESIGN OVERSIGHT
SIGN OFF DATE 03/09/12

Rev. Date: 5-18-98

	BY	CHECKED
DESIGN	G. Baker	P. Ritchie
DETAILS	C. Mauch	T. McMeans
QUANTITIES	D. Turner	M. Roberts

PREPARED FOR THE STATE OF CALIFORNIA DEPARTMENT OF TRANSPORTATION

R. Manzanarez
PROJECT ENGINEER

BRIDGE NO. 34-0006L/R
KILOMETER POST 13.2/13.9

SAN FRANCISCO OAKLAND BAY BRIDGE
EAST SPAN SEISMIC SAFETY PROJECT
SELF-ANCHORED SUSPENSION BRIDGE
(SUPPERSTRUCTURE & TOWER)

GIRDER AT PIER E2 NO. 2

ORIGINAL SCALE IN MILLIMETERS FOR REDUCED PLANS 0 10 20 30 40 50 60 70 80 90 100

CU 04
EA 0120F1

DISREGARD PRINTS BEARING EARLIER REVISION DATES

REVISION DATES (PRELIMINARY STAGE ONLY) 01/18/99 10/20/99 01/24/02 02/07/02 12/04/02 10/14/05 11/14/05 12/01/05

SHEET 258R3 OF

FILE => I:\bb\04-01200\sas\contract plans and cco\cco\cco*87\2-update 03-09-12\dgn\aggdd07.dgn

USERNAME => DWitrow DATE PLOTTED => 09 MAR 2012 TIME PLOTTED => 10:02:42

100 % PS&E

DIST.	COUNTY	ROUTE	KILOMETER POST TOTAL PROJECT	SHEET NO.	TOTAL SHEETS
04	SF	80	13.2/13.9	675S1	1204

Daniel J. Turner
REGISTERED ENGINEER - CIVIL
03-09-12
PLANS APPROVAL DATE

REGISTERED PROFESSIONAL ENGINEER Daniel J. Turner No. C 65033 Exp. 06/30/13 CIVIL STATE OF CALIFORNIA

The State of California or its officers or agents shall not be responsible for the accuracy or completeness of electronic copies of this plan sheet.

T.Y. LIN / MOFFATT & NICHOL
825 BATTERY STREET
SAN FRANCISCO, CA 94111

Caltrans now has a web site! To get to the web site, go to: http://www.dot.ca.gov

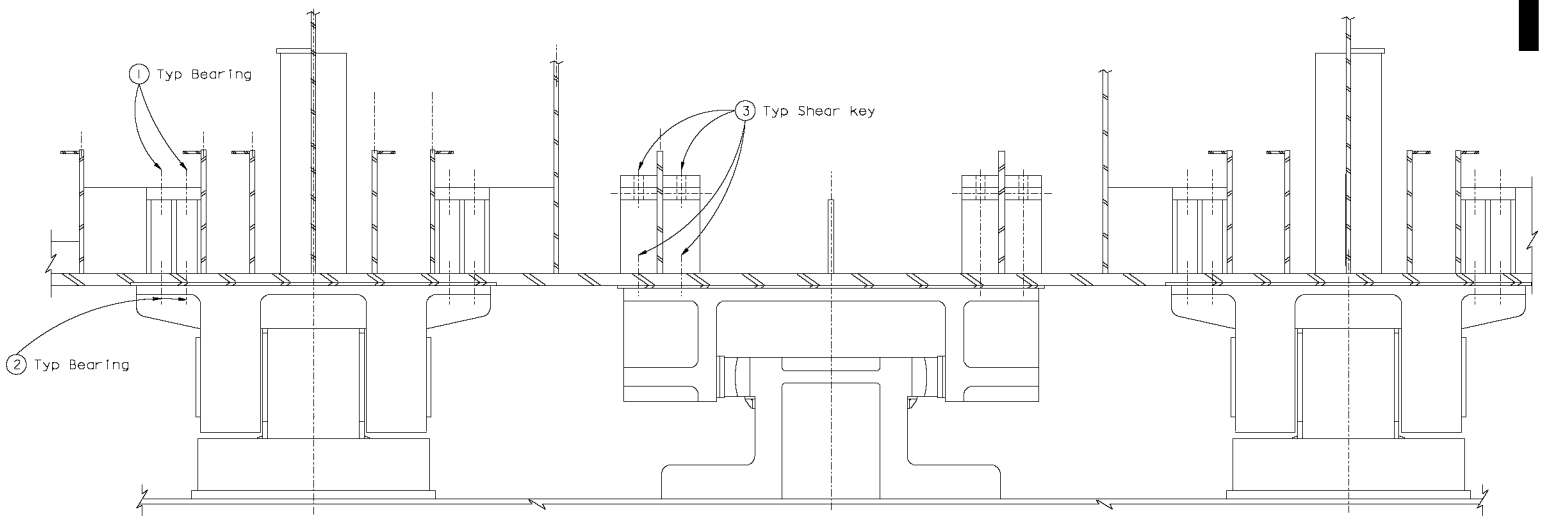

SECTION A-A (See Note 15)

1:20

NOTES:

15. At the Contractor's option, oversize holes may be used for the anchor bolt and keeper bolt in the top anchor plates of the seat assemblies, and in the key PL.

16. At the Contractor's option, an equivalent PJP may be used in lieu of a double sided fillet weld.

17. At the Contractor's option, the flange may be placed on the opposite side of the bearing stiffener.

18. At the Contractor's option, the top bearing PL may be detailed to overhang the side stiffener plates by 5 mm, subject to review and approval of the Engineer.

19. At the Contractor's option, the top bearing PL may be detailed to provide 5 mm gap at the floorbeams and abutting longitudinal members.

20. At the Contractor's option, the top bearing PL may be detailed to provide 5 mm gap at the abutting longitudinal members.

21. At the Contractor's option, keeper bolts may be placed in the upper top bearing plate. Oversized holes may be used in the bearing plates and vertical plates at keeper bolt locations, subject to review and approval of the Engineer.

22. At the Contractor's option, double-sided 24 mm fillet may be used on selected stiffener to floorbeam welds, subject to review and approval of the Engineer.

CONTRACT CHANGE ORDER NO. ____
SHEET ___ OF ___

REQUESTS FOR INFORMATION NOT ADDRESSED IN THIS CCO REMAIN IN FORCE

ALL DIMENSIONS ARE IN MILLIMETERS UNLESS OTHERWISE SHOWN

R. Valizadeh/V. Toan/Y.L./W.L./F.C.
DESIGN OVERSIGHT
Roya Valizadeh / Vinh Toan / Y. Liu
SIGN OFF DATE 03/09/12

MARK	DATE	DESCRIPTIONS	BY	CH'D	CCO#
0	03/09/12	EAST END OBG	DT	GB	87

REVISIONS

DESIGN	BY D. Turner	CHECKED G. Baker	
DETAILS	BY D. Turner	CHECKED G. Baker	
QUANTITIES	BY D. Turner	CHECKED G. Baker	

PREPARED FOR THE STATE OF CALIFORNIA DEPARTMENT OF TRANSPORTATION

R. Manzanarez
PROJECT ENGINEER

BRIDGE NO. 34-0006L/R
KILOMETER POST 13.2/13.9

SAN FRANCISCO OAKLAND BAY BRIDGE
EAST SPAN SEISMIC SAFETY PROJECT
SELF-ANCHORED SUSPENSION BRIDGE
(SUPPERSTRUCTURE & TOWER)

GIRDER AT PIER E2 NO. 2A

Rev. Date: 5-18-98

ORIGINAL SCALE IN MILLIMETERS FOR REDUCED PLANS 0 10 20 30 40 50 60 70 80 90 100

CU 04
EA 0120F1

DISREGARD PRINTS BEARING EARLIER REVISION DATES → 03/08/12

REVISION DATES (PRELIMINARY STAGE ONLY)

SHEET 258S1 OF

FILE => I:\bb\04-012001\sas\contract plans and cca\cco\cco#87\2-update 03-09-12\dgn\aggdd07a.dgn

USERNAME => DWitrow DATE PLOTTED => 09 MAR 2012 TIME PLOTTED => 10:03:37

100 % PS&E

DIST.	COUNTY	ROUTE	KILOMETER POST TOTAL PROJECT	SHEET NO.	TOTAL SHEETS
04	SF	80	13.2/13.9	676R1	1204

George Baker
REGISTERED ENGINEER - CIVIL
12-6-04
PLANS APPROVAL DATE

REGISTERED PROFESSIONAL ENGINEER George S. Baker No. C 57112 Exp. 12/31/05 CIVIL STATE OF CALIFORNIA

The State of California or its officers or agents shall not be responsible for the accuracy or completeness of electronic copies of this plan sheet.

T.Y. LIN / MOFFATT & NICHOL
825 BATTERY STREET
SAN FRANCISCO, CA 94111

Caltrans now has a web site! To get to the web site, go to: http://www.dot.ca.gov

Caltrans Metric

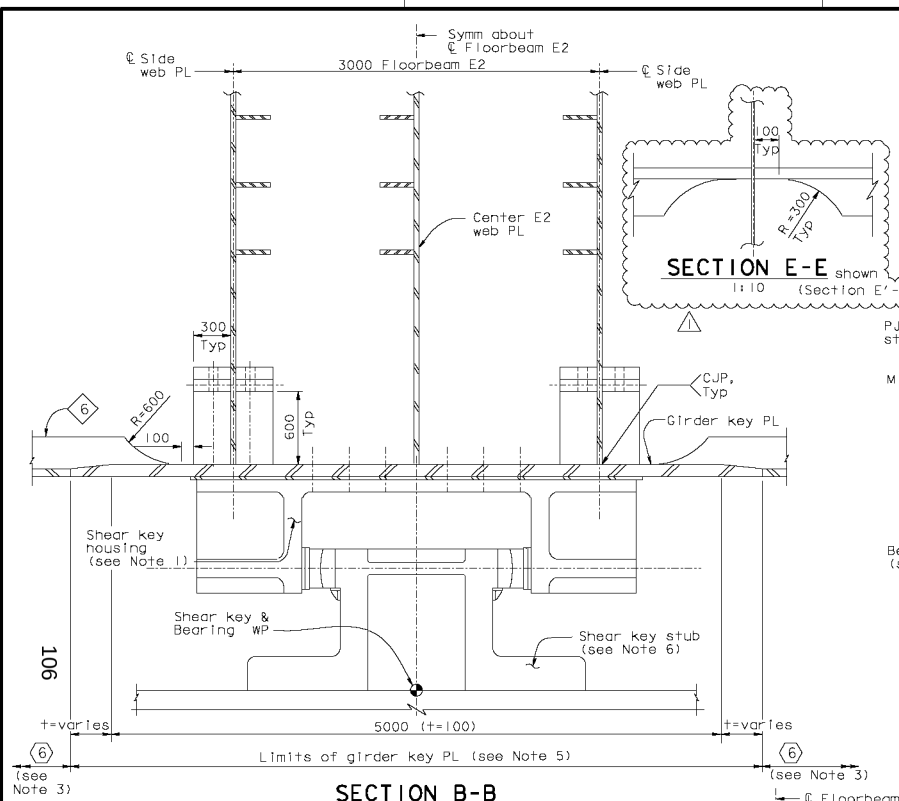

SECTION B-B
1:20

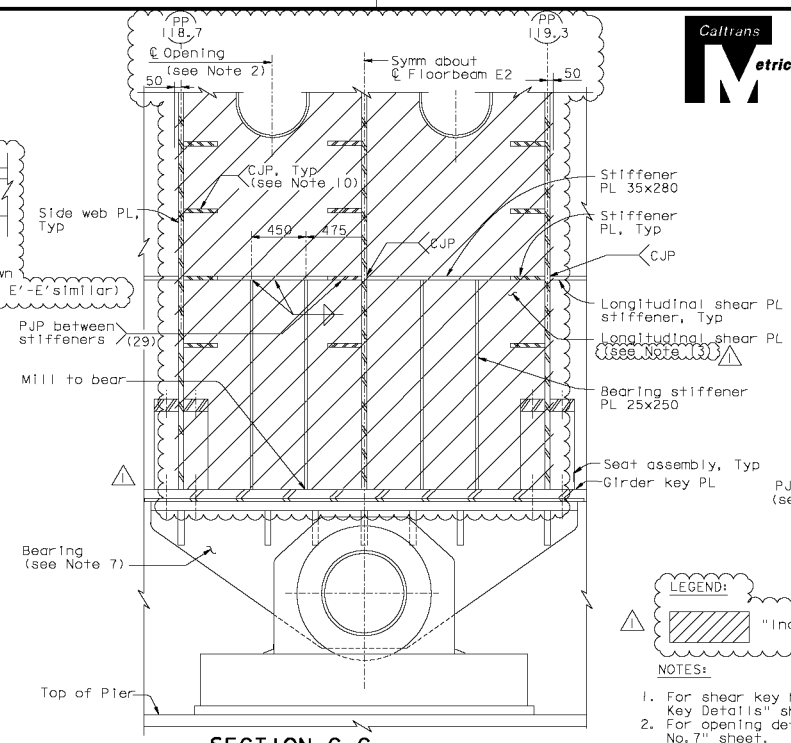

SECTION C-C
1:20

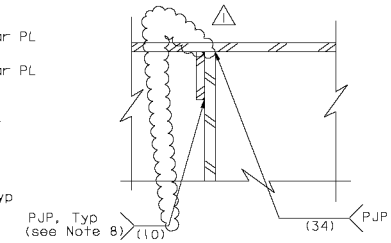

DETAIL B - ALTERNATIVE STIFFENER WELD

LEGEND: 1:10
"Indicates TTP Web PL"

NOTES:

1. For shear key housing details, see "Pier E2 Shear Key Details" sheet.
2. For opening details, see "Typical Girder Details No.7" sheet.
3. For typical girder details not shown, see "Typical Girder Details" sheets.
4. For anchor bolt, see "Pier E2 Bearing Details" sheets.
5. For transverse limits of girder key PL, see "Girder At Pier E2 No.1" sheet.
6. For shear key details, see "Pier E2 Shear Key Details" sheets.
7. For Pier E2 bearing details, see "Pier E2 Bearing Details" sheets.
8. For bearing stiffeners in faying contact with diaphragms or webs, stiffener corners and welds may be ground to allow fit-up.
9. Leveling PL may be used to compensate for the permissible out-of-flatness of the girder key plate. Leveling plates shall be tapered as required to ensure proper alignment of the bearings and shear keys in both longitudinal and transverse directions.
10. Stiffeners welded to the longitudinal shear PL shall be coped. See stiffener type 9 in similar Section D-D on "Typical Crossbeam Details No.6" sheet.
11. At the Contractor's option and subject to review and approval of the Engineer, a 1:2.5 taper may be used in lieu of the 1:10 taper. The overall width of the girder key PL shall remain 5800 mm.
12. For Detail D and Section H-H, see "Girder At Pier E2 No.3A" sheet.
13. The longitudinal shear PL shall have Through Thickness Properties (TTP).

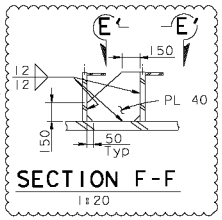

SECTION F-F
1:20

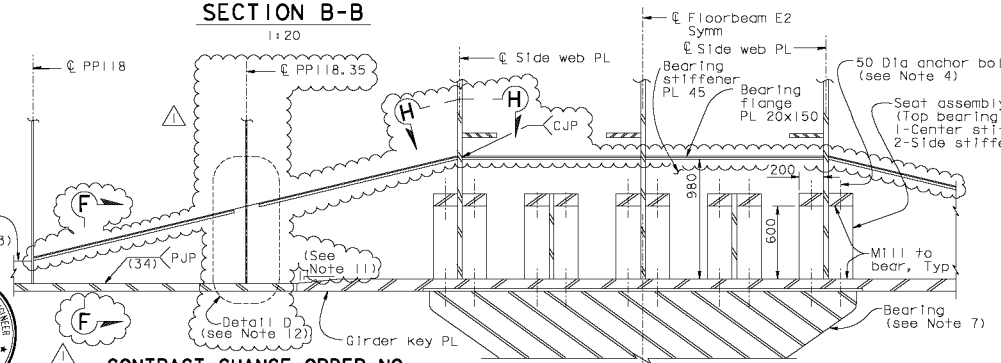

SECTION D-D
1:20

REGISTERED PROFESSIONAL ENGINEER Marwan N. Nader No. C 054426 Exp. 12/31/13 CIVIL STATE OF CALIFORNIA

FOR REVISIONS ONLY

CONTRACT CHANGE ORDER NO. ____
SHEET ___ OF ___

REQUESTS FOR INFORMATION NOT ADDRESSED IN THIS CCO REMAIN IN FORCE

ALL DIMENSIONS ARE IN MILLIMETERS UNLESS OTHERWISE SHOWN

R. Valizadeh/V. Toan/Y.L./W.L./F.C.
DESIGN OVERSIGHT
Roya Valizadeh / Vinh Toan / Y. Liu
SIGN OFF DATE 04/18/12

MARK	DATE	DESCRIPTIONS	BY	CH'D	CCO#
1	04/18/12	EAST END OBC	GB	MN	87

REVISIONS

DESIGN	BY G. Baker	CHECKED	P. Ritchie
DETAILS	BY C. Mauch	CHECKED	T. McMeans
QUANTITIES	BY D. Turner	CHECKED	M. Roberts

PREPARED FOR THE STATE OF CALIFORNIA DEPARTMENT OF TRANSPORTATION

R. Manzanarez
PROJECT ENGINEER

BRIDGE NO. 34-0006L/R
KILOMETER POST 13.2/13.9

SAN FRANCISCO OAKLAND BAY BRIDGE
EAST SPAN SEISMIC SAFETY PROJECT
SELF-ANCHORED SUSPENSION BRIDGE (SUPERSTRUCTURE & TOWER)

GIRDER AT PIER E2 NO.3

Rev. Date: 5-18-98

ORIGINAL SCALE IN MILLIMETERS FOR REDUCED PLANS 0 10 20 30 40 50 60 70 80 90 100

CU 04
EA 0120F1

DISREGARD PRINTS BEARING EARLIER REVISION DATES

REVISION DATES (PRELIMINARY STAGE ONLY) 5/18/98 12/20/99 01/24/01 02/08/02 02/07/02 11/14/02 11/20/03 12/07/05

SHEET 259R1 OF

FILE => I:\bb\04-012001\sds\contract plans and cco\cco\cco*87\temp\ggcd08.dgn

USERNAME => DWitrow DATE PLOTTED => 18 APR 2012 TIME PLOTTED => 11:07:13

100% PS&E

DIST.	COUNTY	ROUTE	KILOMETER POST TOTAL PROJECT	SHEET NO.	TOTAL SHEETS
04	SF	80	13.2/13.9	677R1	1204

George Baker
REGISTERED ENGINEER - CIVIL
12-6-04
PLANS APPROVAL DATE

REGISTERED PROFESSIONAL ENGINEER George S. Baker No. C 57112 Exp. 12/31/05 CIVIL STATE OF CALIFORNIA

The State of California or its officers or agents shall not be responsible for the accuracy or completeness of electronic copies of this plan sheet.

T.Y. LIN / MOFFATT & NICHOL
825 BATTERY STREET
SAN FRANCISCO, CA 94111

Caltrans now has a web site! To get to the web site, go to: http://www.dot.ca.gov

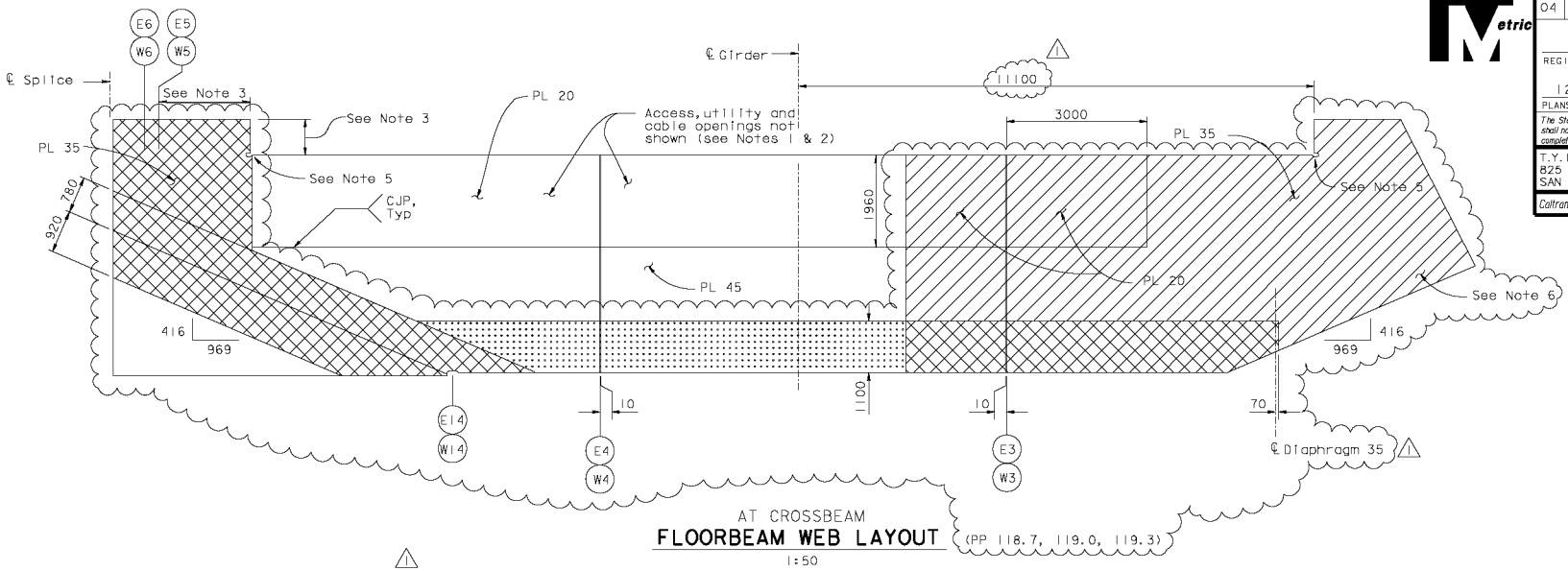

AT CROSSBEAM
FLOORBEAM WEB LAYOUT
1:50

(PP 118.7, 119.0, 119.3)

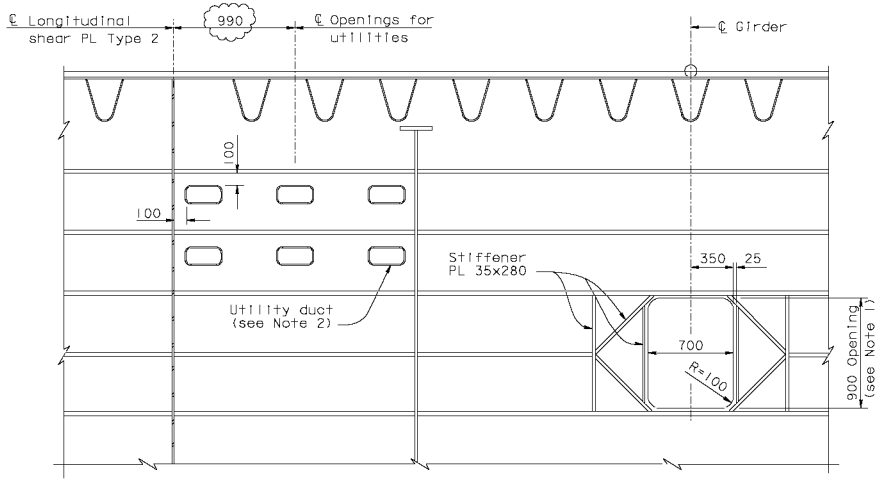

DETAIL C
1:20

LEGEND:

- "Indicates SPCM web PL"
- "Indicates TTP web PL"
- "Indicates SPCM & TTP web PL"

NOTES:

1. For opening details not shown, see "Typical Girder Details No. 7" sheets.
2. For utility details not shown, see "Utility Details" sheets.
3. For dimensions not shown, see "Partial Typical Sections", "Typical Girder Details" and "Girder At Pier E2 No. 1" sheets.
4. For stiffener cutouts, see "Typical Girder Details No. 3", "Typical Girder Details No. 5" and "Typical Girder Details No. 6" sheets.
5. For cutout detail, see "Typical Floorbeam Details No. 3" sheet.
6. For floorbeam web cutout at East Saddle Grillage, see "Girder At Pier E2 No. 5" sheet.

Daniel A. Turner
REGISTERED PROFESSIONAL ENGINEER No. C 65033 Exp. 06/30/13 CIVIL STATE OF CALIFORNIA

FOR REVISIONS ONLY

CONTRACT CHANGE ORDER NO. ____
SHEET ___ OF ___

REQUESTS FOR INFORMATION NOT ADDRESSED IN THIS CCO REMAIN IN FORCE

ALL DIMENSIONS ARE IN MILLIMETERS UNLESS OTHERWISE SHOWN

R. Valizadeh/V. Toan/Y.L./W.L./F.C.
DESIGN OVERSIGHT
Reza Valizadeh / Vong Toan / Y. Lu
SIGN OFF DATE 09/01/11

MARK	DATE	DESCRIPTIONS	BY	CH'D	CCO#
1	09/01/11	EAST END OBC	GB	DT	87

REVISIONS

DESIGN	BY G. Baker	CHECKED	P. Ritchie
DETAILS	BY C. Mauch	CHECKED	T. McMeans
QUANTITIES	BY D. Turner	CHECKED	M. Roberts

PREPARED FOR THE STATE OF CALIFORNIA DEPARTMENT OF TRANSPORTATION

R. Manzanarez
PROJECT ENGINEER

BRIDGE NO. 34-0006L/R
KILOMETER POST 13.2/13.9

SAN FRANCISCO OAKLAND BAY BRIDGE
EAST SPAN SEISMIC SAFETY PROJECT
SELF-ANCHORED SUSPENSION BRIDGE (SUPERSTRUCTURE & TOWER)

GIRDER AT PIER E2 NO. 4

Rev. Date: 5-18-98

ORIGINAL SCALE IN MILLIMETERS FOR REDUCED PLANS 0 10 20 30 40 50 60 70 80 90 100

CU 04
EA 0120F1

DISREGARD PRINTS BEARING EARLIER REVISION DATES

REVISION DATES (PRELIMINARY STAGE ONLY) 5/15/98 12/30/98 12/31/01 12/30/02 12/31/02 12/31/03

SHEET 260R1 OF

FILE => I:\bb\04-012001\sds\contract plans and cca\cco\cco*87\1-original 09-01-11\dgn\aggdd09.dgn

100 % PS&E

USERNAME => ALishansky DATE PLOTTED => 30 AUG 2011 TIME PLOTTED => 11:37:51

DIST.	COUNTY	ROUTE	KILOMETER POST TOTAL PROJECT	SHEET NO.	TOTAL SHEETS
04	SF	80	13.2/13.9	678R1	1204

George Baker
REGISTERED ENGINEER - CIVIL
12-6-04
PLANS APPROVAL DATE

REGISTERED PROFESSIONAL ENGINEER George S. Baker No. C 57112 Exp. 12/31/05 CIVIL STATE OF CALIFORNIA

The State of California or its officers or agents shall not be responsible for the accuracy or completeness of electronic copies of this plan sheet.

T.Y. LIN / MOFFATT & NICHOL
825 BATTERY STREET
SAN FRANCISCO, CA 94111

Caltrans now has a web site! To get to the web site, go to: http://www.dot.ca.gov

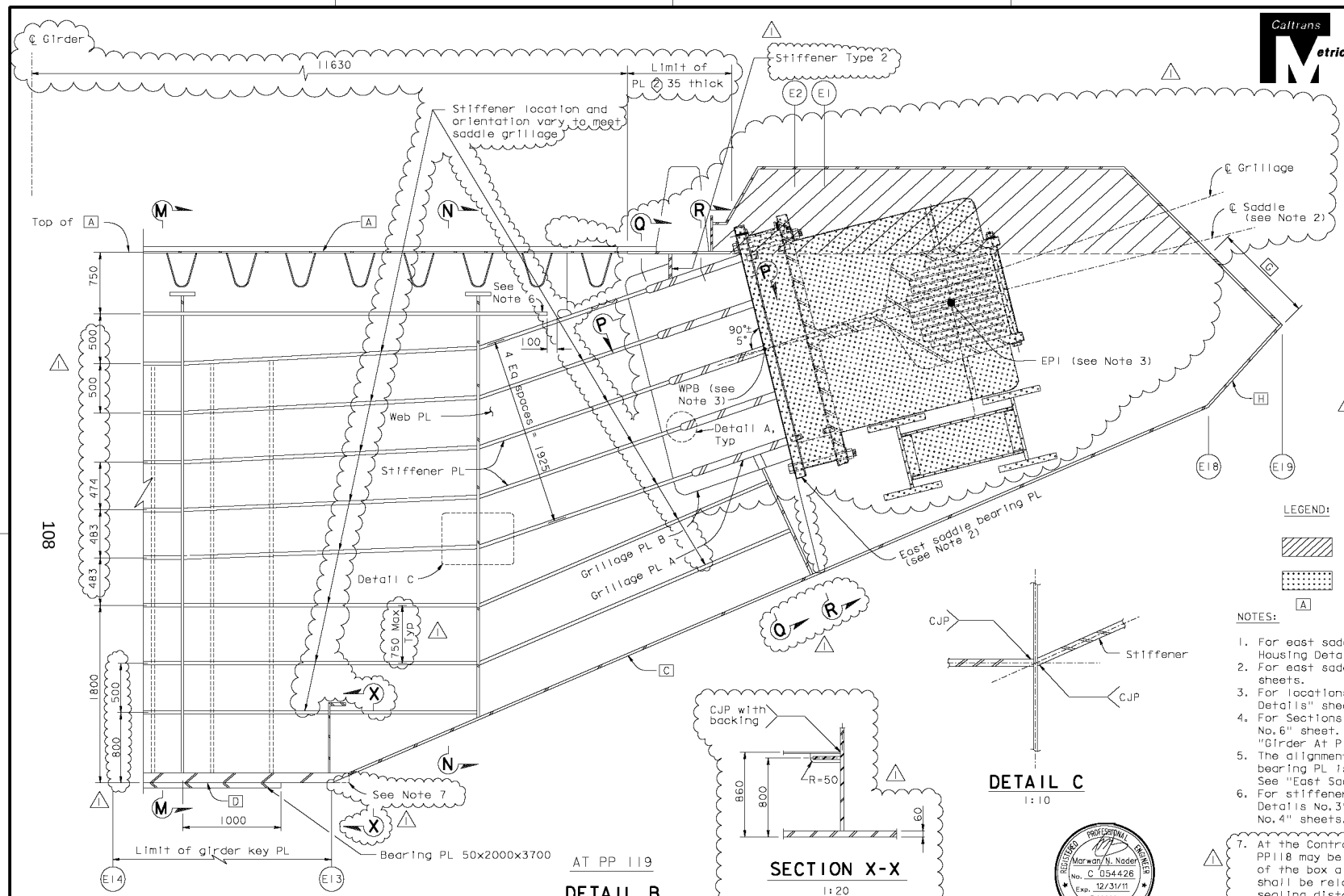

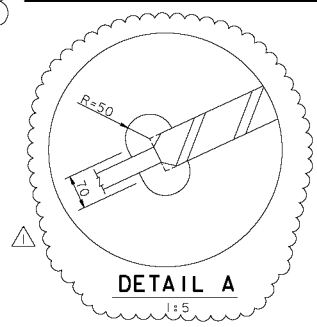

DETAIL A
1:5

LEGEND:

- Limits of east saddle housing (see Note 1)
- East saddle (see Note 2)
- A Girder PL A

NOTES:

1. For east saddle housing details, see "East Saddle Housing Details" sheets.
2. For east saddle details, see "East Saddle Details" sheets.
3. For locations of EP1 and WPB, see "East Saddle Details" sheets.
4. For Sections M-M and N-N, see "Girder At Pier E2 No.6" sheet. For Sections P-P, Q-Q and R-R, see "Girder At Pier E2 No.7" sheet.
5. The alignment of the saddle grillage and saddle bearing PL is related to the saddle layout. See "East Saddle Details" sheets.
6. For stiffener terminations, see "Typical Floorbeam Details No.3" and "Typical Floorbeam Details No.4" sheets.
7. At the Contractor's option, the bearing PL 50 at PP118 may be trimmed flush with the bottom edge of the box along line W13. The bearing PL bolts shall be relocated so as to maintain minimum sealing distance along the bearing PL edge.
8. Final saddle grillage orientation shall be determined from final cable geometry.

DETAIL C
1:10

SECTION X-X
1:20

AT PP 119

DETAIL B
1:20

REGISTERED PROFESSIONAL ENGINEER Marwan N. Nader No. C 054426 Exp. 12/31/11 CIVIL STATE OF CALIFORNIA

FOR REVISIONS ONLY

ALL DIMENSIONS ARE IN MILLIMETERS UNLESS OTHERWISE SHOWN

CONTRACT CHANGE ORDER NO. ____
SHEET ___ OF ___

REQUESTS FOR INFORMATION NOT ADDRESSED IN THIS CCO REMAIN IN FORCE

R. Valizadeh/V. Toan/Y.L./W.L./F.C.
DESIGN OVERSIGHT
SIGN OFF DATE 09/01/11

MARK	DATE	DESCRIPTIONS	BY	CH'D	CCO#
1	09/01/11	EAST END OBC	GB	MN	87

REVISIONS

DESIGN	BY G. Baker	CHECKED	P. Ritchie
DETAILS	BY C. Mauch	CHECKED	T. McMeans
QUANTITIES	BY D. Turner	CHECKED	M. Roberts

PREPARED FOR THE STATE OF CALIFORNIA DEPARTMENT OF TRANSPORTATION

R. Manzanarez
PROJECT ENGINEER

BRIDGE NO. 34-0006L/R
KILOMETER POST 13.2/13.9

SAN FRANCISCO OAKLAND BAY BRIDGE
EAST SPAN SEISMIC SAFETY PROJECT
SELF-ANCHORED SUSPENSION BRIDGE (SUPERSTRUCTURE & TOWER)

GIRDER AT PIER E2 NO.5

Rev. Date: 5-18-98

ORIGINAL SCALE IN MILLIMETERS FOR REDUCED PLANS 0 10 20 30 40 50 60 70 80 90 100

CU 04
EA 0120F1

DISREGARD PRINTS BEARING EARLIER REVISION DATES

REVISION DATES (PRELIMINARY STAGE ONLY) 05/08/99 08/06/99 05/24/01 09/06/02 07/09/02 12/13/02 12/01/03

SHEET 261R1 OF

FILE => I:\bb\04-012001\sas\contract plans and cco\cco\cco*87\1-original 09-01-11\dgn\aggdd10.dgn

USERNAME => ALI.tahanas DATE PLOTTED => 30 AUG 2011 TIME PLOTTED => 11:39:23

100 % PS&E

DIST.	COUNTY	ROUTE	KILOMETER POST TOTAL PROJECT	SHEET NO.	TOTAL SHEETS
04	SF	80	13.2/13.9	679R1	1204

George Baker
REGISTERED ENGINEER - CIVIL
12-6-04
PLANS APPROVAL DATE

REGISTERED PROFESSIONAL ENGINEER George S. Baker No. C 57112 Exp. 12/31/05 CIVIL STATE OF CALIFORNIA

The State of California or its officers or agents shall not be responsible for the accuracy or completeness of electronic copies of this plan sheet.

T.Y. LIN / MOFFATT & NICHOL
825 BATTERY STREET
SAN FRANCISCO, CA 94111

Caltrans now has a web site! To get to the web site, go to: http://www.dot.ca.gov

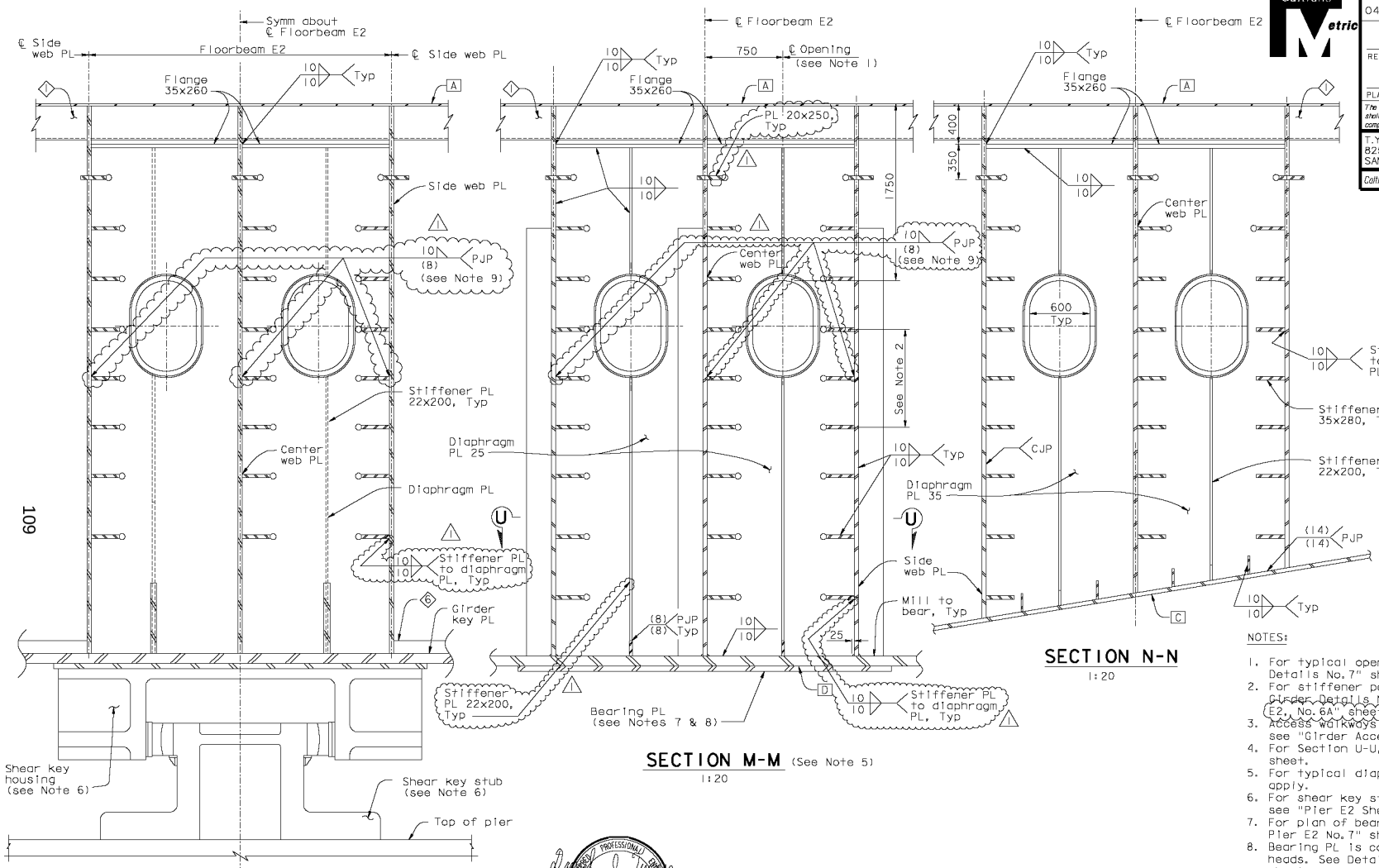

SECTION F-F
1:20

SECTION M-M (See Note 5)
1:20

SECTION N-N
1:20

NOTES:

1. For typical opening detail, see "Typical Girder Details No. 7" sheet.
2. For stiffener penetration details, see "Typical Girder Details No. 5" sheet and "Girder At Pier E2, No. 6A" sheet.
3. Access walkways not shown. For access details, see "Girder Access Details" sheets.
4. For Section U-U, see "Girder At Pier E2 No. 8" sheet.
5. For typical diaphragm details, Section M-M shall apply.
6. For shear key stub and shear key housing details, see "Pier E2 Shear Key Details" sheets.
7. For plan of bearing PL, see "Crossbeam at Pier E2 No. 7" sheet.
8. Bearing PL is counterbored to accomodate bolt heads. See Detail J on "Crossbeam At Pier E2 No. 3" sheet.
9. At web PL taper, provide (8) PJP weld in lieu of fillet weld.

CONTRACT CHANGE ORDER NO. ____
SHEET ___ OF ___

REQUESTS FOR INFORMATION NOT ADDRESSED IN THIS CCO REMAIN IN FORCE

REGISTERED PROFESSIONAL ENGINEER Daniel J. Turner No. C 65033 Exp. 06/30/13 CIVIL STATE OF CALIFORNIA

FOR REVISIONS ONLY

ALL DIMENSIONS ARE IN MILLIMETERS UNLESS OTHERWISE SHOWN

R. Valizadeh/V. Toan/Y.L./W.L./F.C.
DESIGN OVERSIGHT
SIGN OFF DATE 09/01/11

MARK	DATE	DESCRIPTIONS	BY	CH'D	CCO#
1	09/01/11	EAST END OBG	GB	DT	87

REVISIONS

DESIGN	BY G. Baker	CHECKED	P. Ritchie
DETAILS	BY C. Mauch	CHECKED	T. McMeans
QUANTITIES	BY D. Turner	CHECKED	M. Roberts

PREPARED FOR THE STATE OF CALIFORNIA DEPARTMENT OF TRANSPORTATION

R. Manzanarez
PROJECT ENGINEER

BRIDGE NO. 34-0006L/R
KILOMETER POST 13.2/13.9

SAN FRANCISCO OAKLAND BAY BRIDGE
EAST SPAN SEISMIC SAFETY PROJECT
SELF-ANCHORED SUSPENSION BRIDGE
(SUPERSTRUCTURE & TOWER)

GIRDER AT PIER E2 NO. 6

Rev. Date: 5-18-98

ORIGINAL SCALE IN MILLIMETERS FOR REDUCED PLANS 0 10 20 30 40 50 60 70 80 90 100

CU 04
EA 0120F1

DISREGARD PRINTS BEARING EARLIER REVISION DATES

REVISION DATES (PRELIMINARY STAGE ONLY) 05/16/95 05/30/95 06/20/95 08/29/95 12/15/95 10/30/95 11/30/95 12/01/95

SHEET 262R1 OF

FILE => I:\bb\04-012001\sas\contract plans and cco\cco\cco*87\1-original 09-01-11\dgn\aggdd12.dgn

100 % PS&E

USERNAME => ALI.tahanas DATE PLOTTED => 30 AUG 2011 TIME PLOTTED => 11:42:35

DIST.	COUNTY	ROUTE	KILOMETER POST TOTAL PROJECT	SHEET NO.	TOTAL SHEETS
04	SF	80	13.2/13.9	717R1	1204

George Baker
REGISTERED ENGINEER - CIVIL
12-6-04
PLANS APPROVAL DATE

REGISTERED PROFESSIONAL ENGINEER George S. Baker No. C 57112 Exp. 12/31/05 CIVIL STATE OF CALIFORNIA

The State of California or its officers or agents shall not be responsible for the accuracy or completeness of electronic copies of this plan sheet.

T.Y. LIN / MOFFATT & NICHOL
825 BATTERY STREET
SAN FRANCISCO, CA 94111

Caltrans now has a web site! To get to the web site, go to: http://www.dot.ca.gov

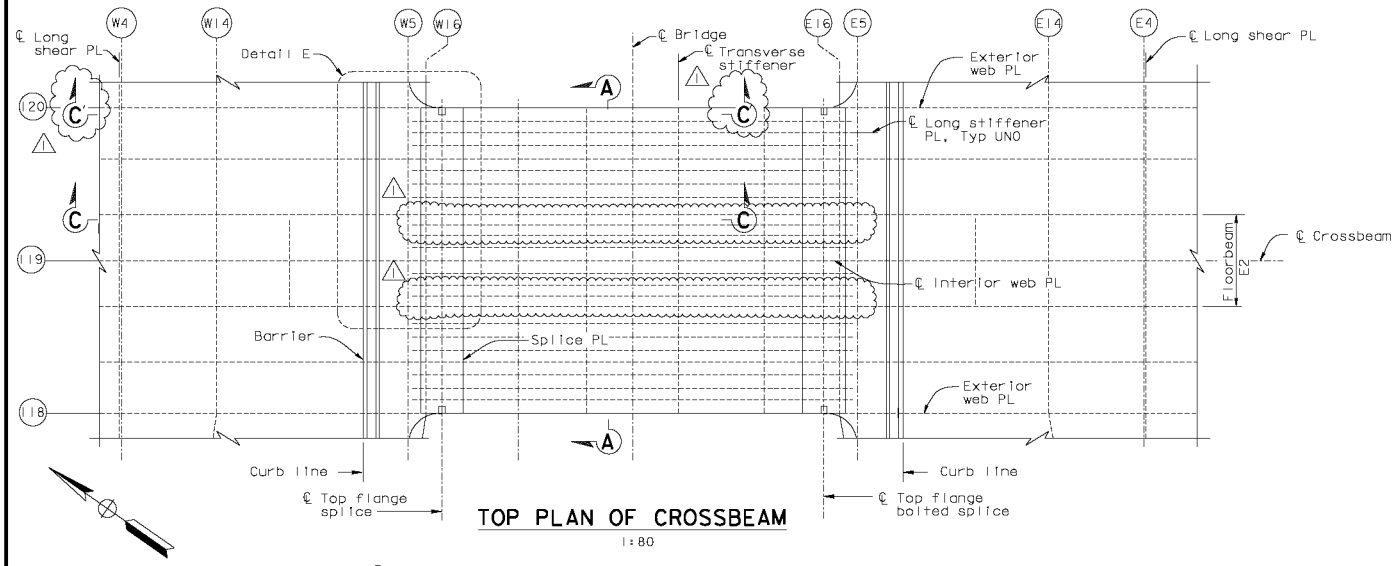

TOP PLAN OF CROSSBEAM

1:80

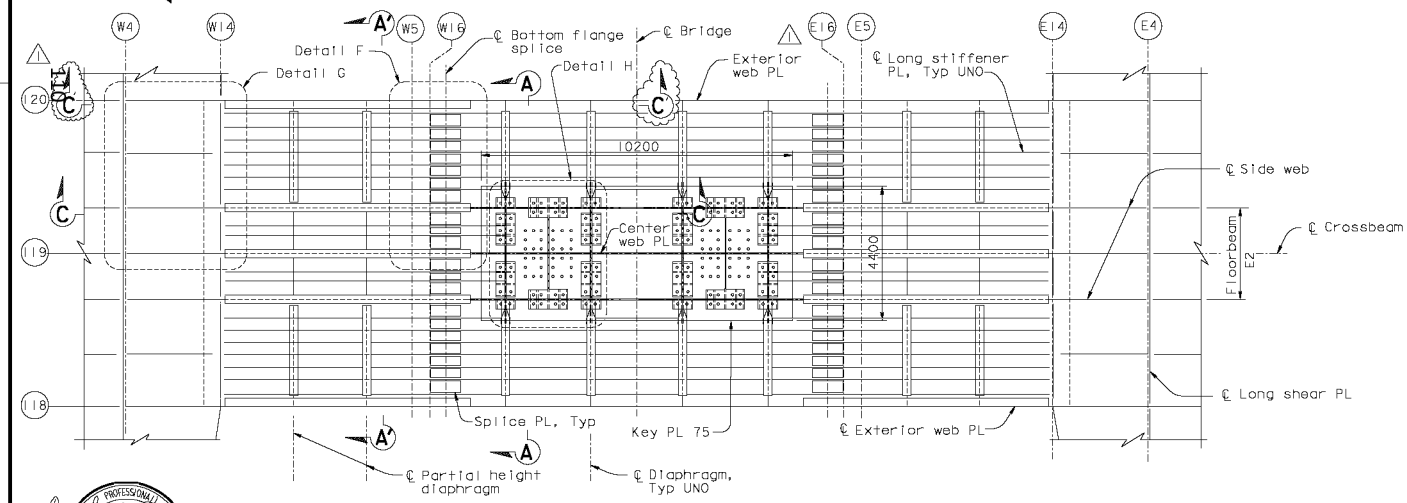

BOTTOM PLAN OF CROSSBEAM

1:80

NOTES:

1. For details not shown, see "Typical Crossbeam Details" sheets.
2. For Section C-C, see "Crossbeam At Pier E2 No.6" sheet. For Section C'-C', see "Crossbeam At Pier E2 No.6A" sheet.
3. For locations of W14, W16, E14 & E16, see "Girder At East Transition No. 1" and "Girder At East Transition No.3" sheets.
4. For all "Crossbeam At Pier E2" sheets, all bolts shall be detailed according to the Bolt Dimension Table. See "Typical Girder Details No.1" sheet. All bolts are HS unless noted otherwise.
5. For "Crossbeam At Pier E2" sheets unless noted otherwise, all fillet welds shall be 6 mm for plate sizes not greater than 20 mm. For plates greater than 20 mm, fillet welds shall be 8 mm unless noted otherwise.
6. For Detail E, see "Crossbeam At Pier E2 No.4" sheet.
7. For Detail F, see "Crossbeam At Pier E2 No.5" sheet.
8. For Detail G, see "Crossbeam At Pier E2 No.7" sheet.
9. For Sections A-A and A'-A', see "Crossbeam At Pier E2 No.2" sheet.

REGISTERED PROFESSIONAL ENGINEER Daniel J. Turner No. C 65033 Exp. 06/30/13 CIVIL STATE OF CALIFORNIA

FOR REVISIONS ONLY

CONTRACT CHANGE ORDER NO. ____
SHEET ___ OF ___

REQUESTS FOR INFORMATION NOT ADDRESSED IN THIS CCO REMAIN IN FORCE

ALL DIMENSIONS ARE IN MILLIMETERS UNLESS OTHERWISE SHOWN

R. Valizadeh/V. Toan/Y.L./W.L./F.C.
DESIGN OVERSIGHT
Reza Valizadeh / Vinh Toan / Y. Liu
SIGN OFF DATE 09/01/11

MARK	DATE	DESCRIPTIONS	BY	CH'D	CCO#
1	09/01/11	EAST END OBG	DT	GB	87

REVISIONS

Rev. Date: 5-18-98

DESIGN	BY G. Baker	CHECKED	P. Ritchie
DETAILS	BY D. Veystman	CHECKED	T. McMeans
QUANTITIES	BY D. Turner	CHECKED	M. Roberts

PREPARED FOR THE STATE OF CALIFORNIA DEPARTMENT OF TRANSPORTATION

R. Manzanarez
PROJECT ENGINEER

BRIDGE NO. 34-0006L/R
KILOMETER POST 13.2/13.9

SAN FRANCISCO OAKLAND BAY BRIDGE
EAST SPAN SEISMIC SAFETY PROJECT
SELF-ANCHORED SUSPENSION BRIDGE
(SUPERSTRUCTURE & TOWER)

CROSSBEAM AT PIER E2 NO. 1

ORIGINAL SCALE IN MILLIMETERS FOR REDUCED PLANS 0 10 20 30 40 50 60 70 80 90 100

CU 04
EA 0120F1

DISREGARD PRINTS BEARING EARLIER REVISION DATES

REVISION DATES (PRELIMINARY STAGE ONLY) 05/08/95 05/08/95 05/08/95 05/08/95 05/08/95 12/08/95 12/07/05

SHEET 300R1 OF

FILE => I:\bb\04-01200\sas\contract plans and cco\cco\cco#87\1-original 09-01-11\dgn\agcrs05a.dgn

DATE PLOTTED => 30 AUG 2011 TIME PLOTTED => 10:21:20

100 % PS&E

USERNAME => PTom

DIST.	COUNTY	ROUTE	KILOMETER POST TOTAL PROJECT	SHEET NO.	TOTAL SHEETS
04	SF	80	13.2/13.9	718R1	1204

George Baker
REGISTERED ENGINEER - CIVIL
12-6-04
PLANS APPROVAL DATE

REGISTERED PROFESSIONAL ENGINEER George S. Baker No. C 57112 Exp. 12/31/05 CIVIL STATE OF CALIFORNIA

The State of California or its officers or agents shall not be responsible for the accuracy or completeness of electronic copies of this plan sheet.

T.Y. LIN / MOFFATT & NICHOL
825 BATTERY STREET
SAN FRANCISCO, CA 94111

Caltrans now has a web site! To get to the web site, go to: http://www.dot.ca.gov

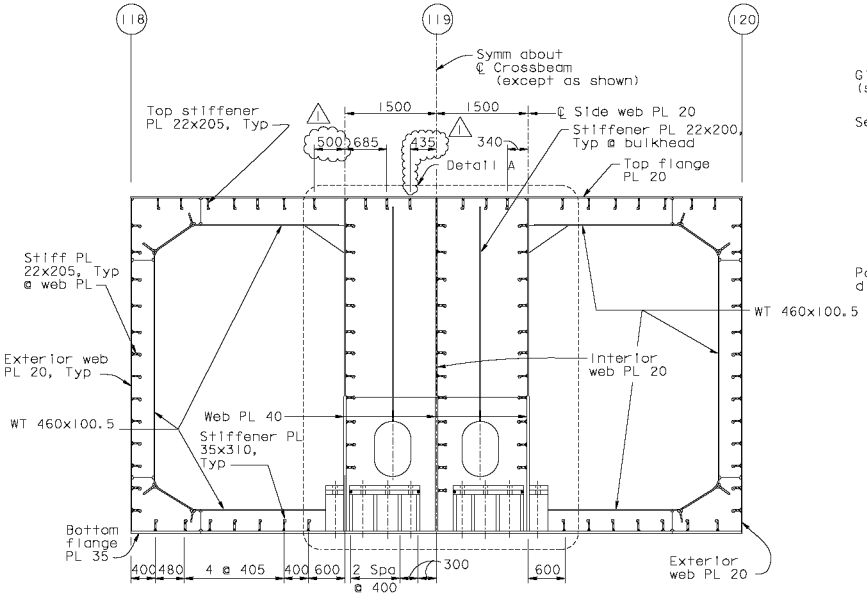

TYPICAL DIAPHRAGM

SECTION A-A

1:40

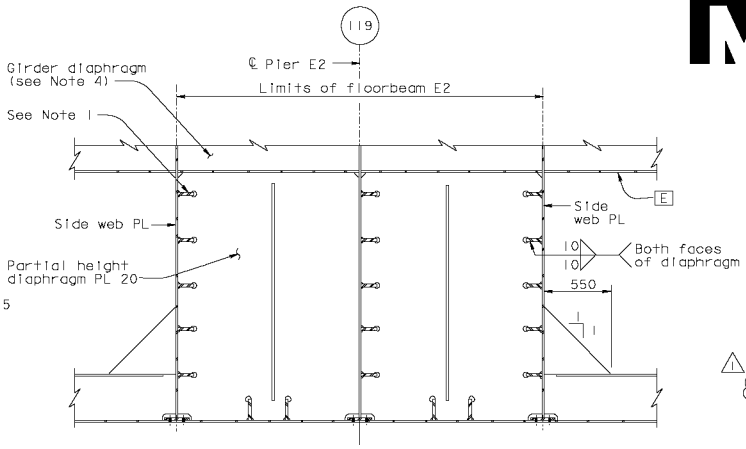

DETAIL B

1:20

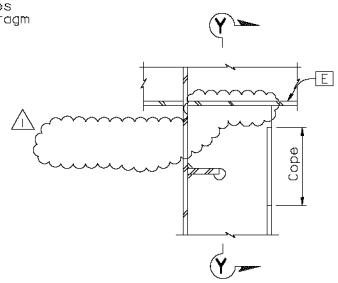

DETAIL C

1:10

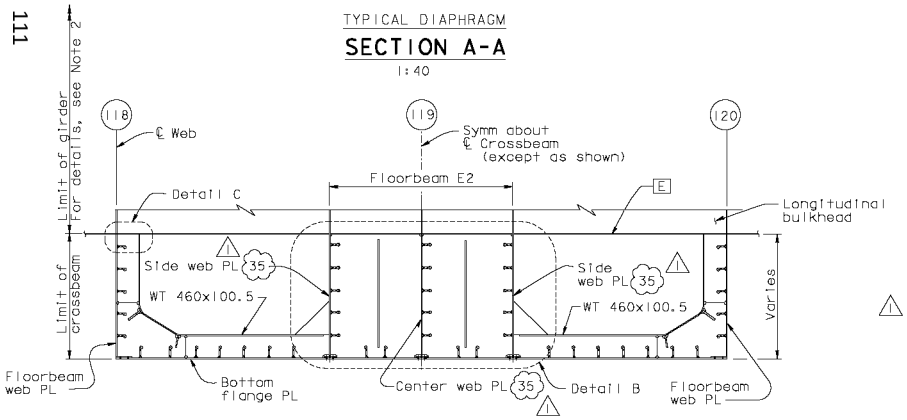

PARTIAL HEIGHT DIAPHRAGM

SECTION A'-A'

1:40

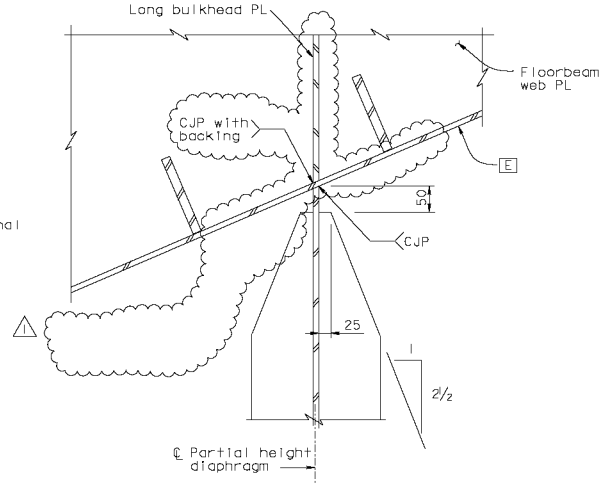

SECTION Y-Y

1:5

NOTES:

1. For details not shown, see "Typical Crossbeam Details" sheets.
2. For girder details, see "Girder At Pier E2" sheets
3. For Detail A, see "Crossbeam At Pier E2 No. 3" sheet.
4. For diaphragm in girder, see "Girder At Pier E2 No. 6" sheet.

REGISTERED PROFESSIONAL ENGINEER Marwan Y. Nader No. C 054426 Exp. 12/31/11 CIVIL STATE OF CALIFORNIA

FOR REVISIONS ONLY

CONTRACT CHANGE ORDER NO. ____
SHEET ___ OF ___

REQUESTS FOR INFORMATION NOT ADDRESSED IN THIS CCO REMAIN IN FORCE

ALL DIMENSIONS ARE IN MILLIMETERS UNLESS OTHERWISE SHOWN

R. Vallizadeh/V. Toan/Y.L./W.L./F.C.
DESIGN OVERSIGHT
Roya Vallizadeh / Vinh Toan / Y. Liu
SIGN OFF DATE 09/01/11

MARK	DATE	DESCRIPTIONS	BY	CH'D	CCO#
1	09/01/11	EAST END OBG	GB	MN	87

REVISIONS

	BY	CHECKED
DESIGN	G. Baker	P. Ritchie
DETAILS	D. Veytsman	T. McMeans
QUANTITIES	D. Turner	M. Roberts

PREPARED FOR THE STATE OF CALIFORNIA DEPARTMENT OF TRANSPORTATION

R. Manzanarez
PROJECT ENGINEER

BRIDGE NO. 34-0006L/R
KILOMETER POST 13.2/13.9

SAN FRANCISCO OAKLAND BAY BRIDGE
EAST SPAN SEISMIC SAFETY PROJECT
SELF-ANCHORED SUSPENSION BRIDGE
(SUPERSTRUCTURE & TOWER)

CROSSBEAM AT PIER E2 NO. 2

Rev. Date: 5-18-98

ORIGINAL SCALE IN MILLIMETERS FOR REDUCED PLANS 0 10 20 30 40 50 60 70 80 90 100

CU 04
EA 0120F1

DISREGARD PRINTS BEARING EARLIER REVISION DATES

REVISION DATES (PRELIMINARY STAGE ONLY)

SHEET 301R1 OF

FILE => I:\bb\04-012001\sds\contract plans and cco\cco\cco#87\1-original 09-01-11\dgn\agcrs13.dgn

USERNAME => PTom DATE PLOTTED => 30 AUG 2011 TIME PLOTTED => 10:28:38

100 % PS&E

DIST.	COUNTY	ROUTE	KILOMETER POST TOTAL PROJECT	SHEET NO.	TOTAL SHEETS
04	SF	80	13.2/13.9	719R1	1204

Caltrans Metric

George Baker
REGISTERED ENGINEER - CIVIL
12-6-04
PLANS APPROVAL DATE

REGISTERED PROFESSIONAL ENGINEER George S. Baker No. C 57112 Exp. 12/31/05 CIVIL STATE OF CALIFORNIA

The State of California or its officers or agents shall not be responsible for the accuracy or completeness of electronic copies of this plan sheet.

T.Y. LIN / MOFFATT & NICHOL
825 BATTERY STREET
SAN FRANCISCO, CA 94111

Caltrans now has a web site! To get to the web site, go to: http://www.dot.ca.gov

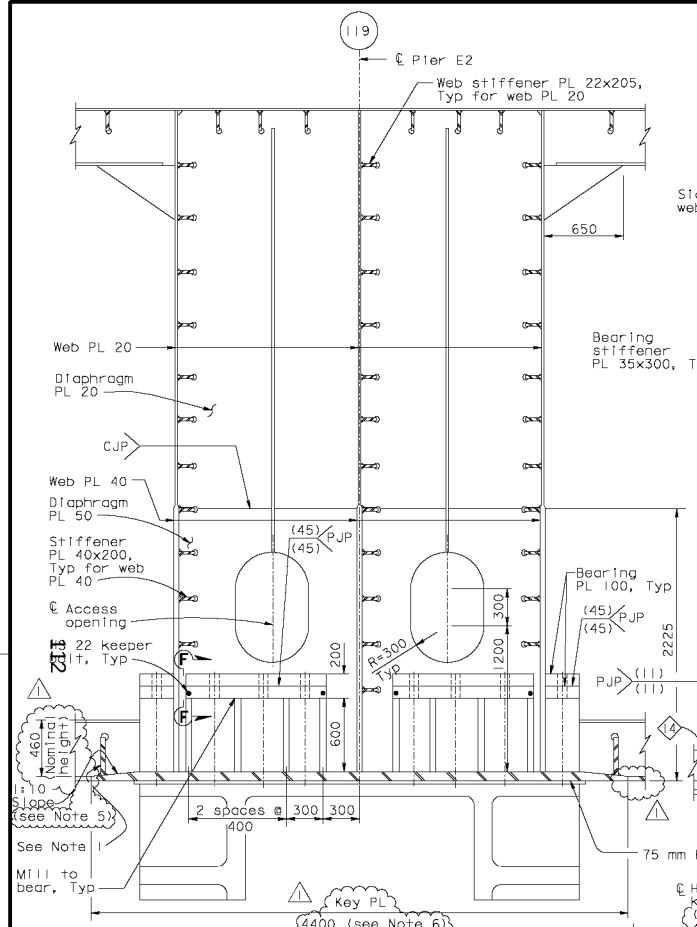

DETAIL A
1:20

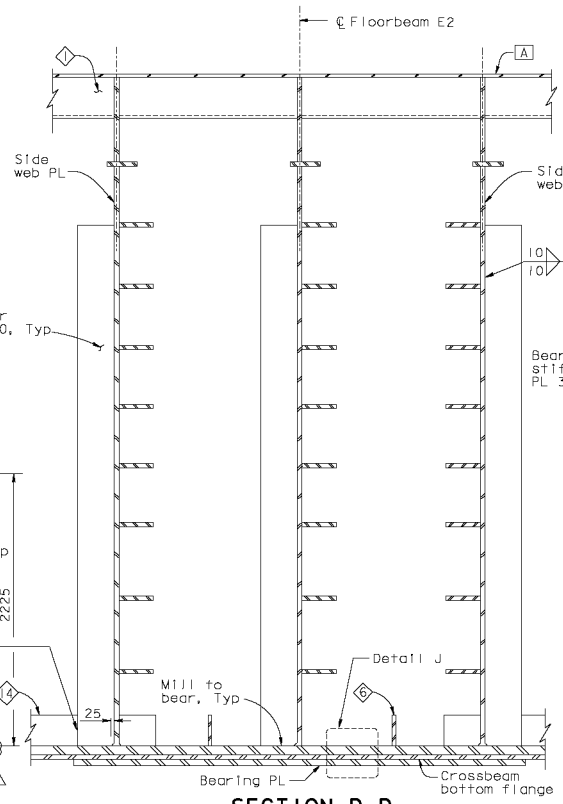

SECTION D-D (See Note 3)
1:20

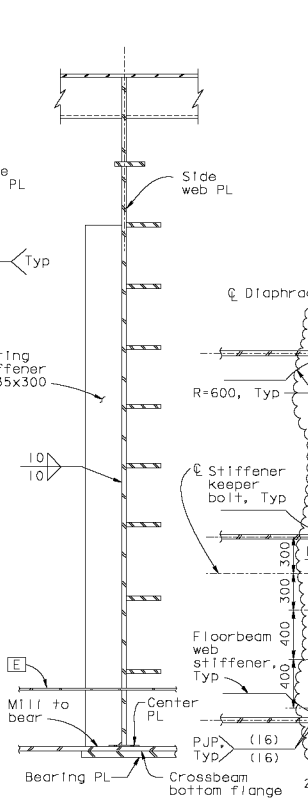

SECTION E-E (See Note 3)
1:20

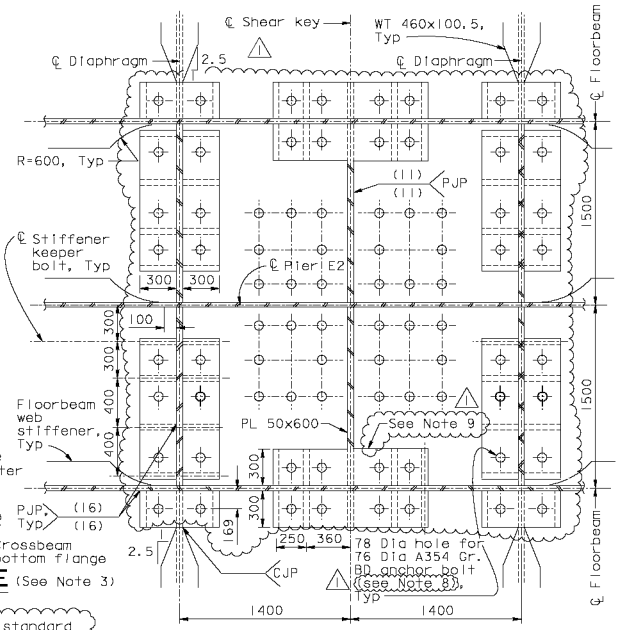

DETAIL H
1:20

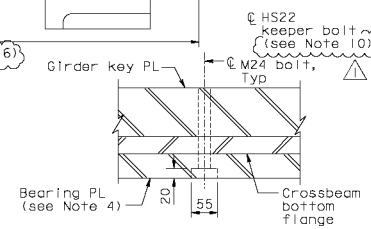

DETAIL J
1:5 (See Note 7)

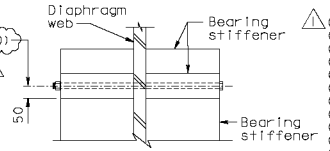

SECTION F-F
1:10

7. At the Contractor's option, standard oversized holes may be used in the key PL and the temporary bearing PL. For this option, a counterbore diameter of 61 mm and a counterbore depth of 25 mm shall be provided.
8. At the Contractor's option, 100 Dia holes may be used in the Key PL and bearing PL, subject to review and approval of the Engineer.
9. At the Contractor's option, the top bearing plates may be detailed to overhang the side stiffener plates by 5 mm, subject to review and approval of the Engineer.
10. At the Contractor's option, keeper bolts may be placed in the upper bearing plate. Oversized holes may be used in the bearing plates and vertical plates at keeper bolt locations, subject to review and approval of the Engineer.

NOTES:

1. No weld to diaphragm this face of stiffener.
2. For details not shown, see "Typical Crossbeam Details" sheets.
3. For Section D-D and E-E callouts, see "Crossbeam At Pier E2 No.7" sheet.
4. Bearing PL is counterbored to accomodate bolt heads.
5. Cope WT460 as required over the key PL.
6. At the Contractor's option and subject to review and approval of the Engineer, it is acceptable to use a taper at 1:2.5 slope at the Key PL. The taper shall end 100 clear of the nearest stiffener. Key PL width shall be 4000 Min.

LEGEND:

76 Dia anchor bolt (A354 Gr. BD)

ALL DIMENSIONS ARE IN MILLIMETERS UNLESS OTHERWISE SHOWN

REGISTERED PROFESSIONAL ENGINEER Marwan N. Nader No. C 054426 Exp. 12/31/13 CIVIL STATE OF CALIFORNIA

FOR REVISIONS ONLY

CONTRACT CHANGE ORDER NO. ____
SHEET ___ OF ___

REQUESTS FOR INFORMATION NOT ADDRESSED IN THIS CCO REMAIN IN FORCE

R. Valizadeh/V. Toan/Y.L./W.L./F.C.
DESIGN OVERSIGHT
Roya Valizadeh / Vinh Toan / Y. Liu
SIGN OFF DATE 04/18/12

MARK	DATE	DESCRIPTIONS	BY	CH'D	CCO#
1	04/18/12	EAST END OBG	MN	GB	87

REVISIONS

DESIGN	G. Baker	CHECKED	P. Ritchie
DETAILS	BY D. Veytsman	CHECKED	T. McMeans
QUANTITIES	BY D. Turner	CHECKED	M. Roberts

PREPARED FOR THE STATE OF CALIFORNIA DEPARTMENT OF TRANSPORTATION

R. Manzanarez
PROJECT ENGINEER

BRIDGE NO. 34-0006L/R
KILOMETER POST 13.2/13.9

SAN FRANCISCO OAKLAND BAY BRIDGE
EAST SPAN SEISMIC SAFETY PROJECT
SELF-ANCHORED SUSPENSION BRIDGE
(SUPERSTRUCTURE & TOWER)

CROSSBEAM AT PIER E2 NO. 3

Rev. Date: 5-18-98

ORIGINAL SCALE IN MILLIMETERS FOR REDUCED PLANS 0 10 20 30 40 50 60 70 80 90 100

CU 04
EA 0120F1

DISREGARD PRINTS BEARING EARLIER REVISION DATES

REVISION DATES (PRELIMINARY STAGE ONLY)

SHEET 302R1 OF

FILE => I:\bb\04-012001\sas\contract plans and cco\cco\cco*87\temp\agers14.dgn

USERNAME => DWitrow DATE PLOTTED => 18 APR 2012 TIME PLOTTED => 11:23:31

100% PS&E

DIST.	COUNTY	ROUTE	KILOMETER POST TOTAL PROJECT	SHEET NO.	TOTAL SHEETS
04	SF	80	13.2/13.9	720R1	1204

George Baker
REGISTERED ENGINEER - CIVIL
12-6-04
PLANS APPROVAL DATE
The State of California or its officers or agents shall not be responsible for the accuracy or completeness of electronic copies of this plan sheet.

REGISTERED PROFESSIONAL ENGINEER George S. Baker No. C57112 Exp. 12/31/05 CIVIL STATE OF CALIFORNIA

T.Y. LIN / MOFFATT & NICHOL
825 BATTERY STREET
SAN FRANCISCO, CA 94111

Caltrans now has a web site! To get to the web site, go to: http://www.dot.ca.gov

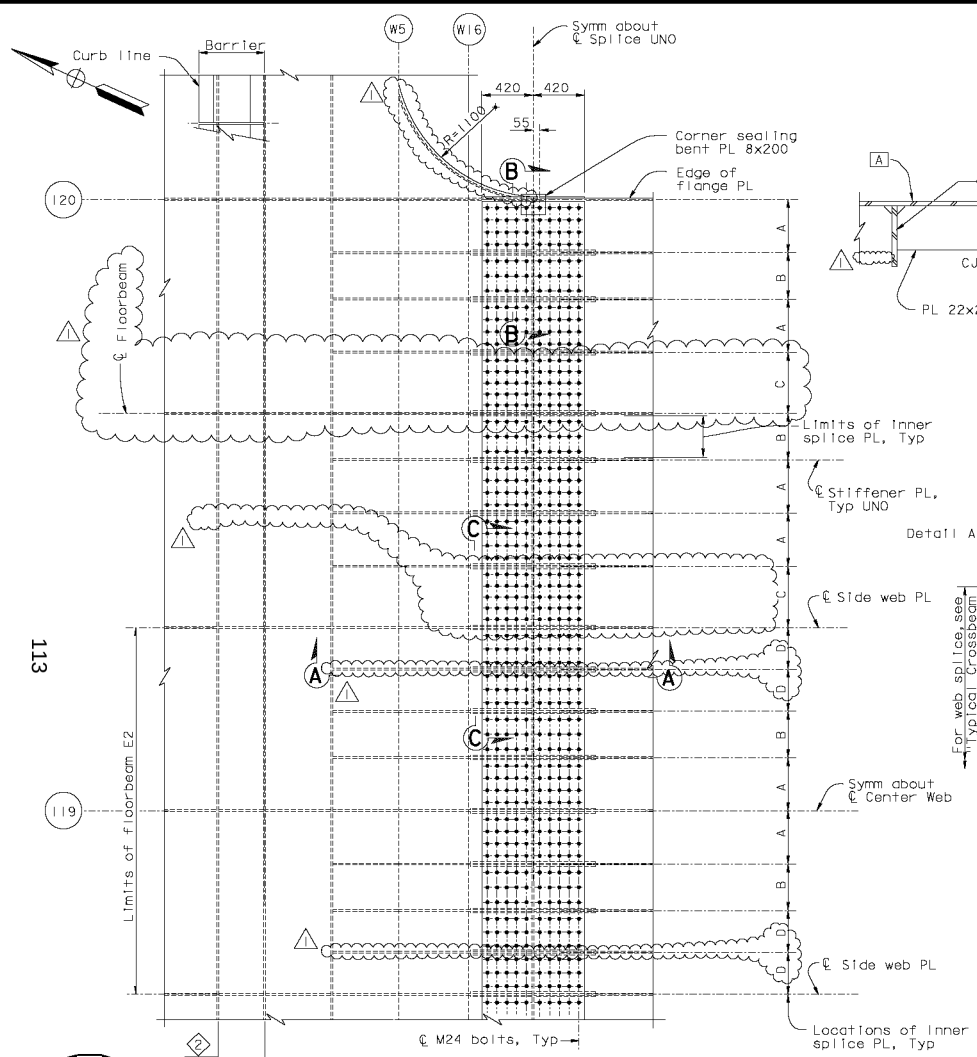

TOP FLANGE SPLICE DETAIL E
1:20

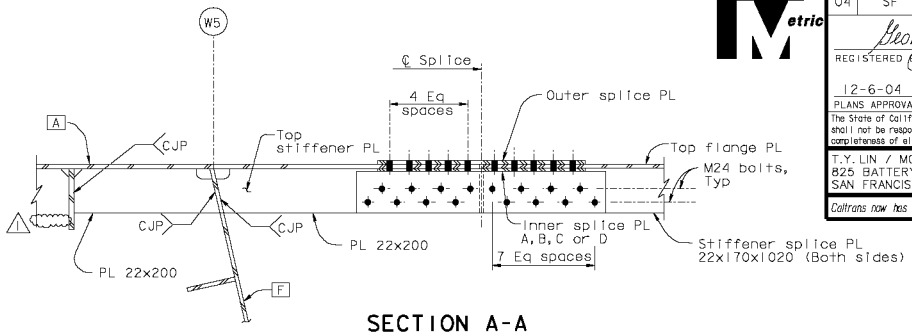

SECTION A-A
1:10

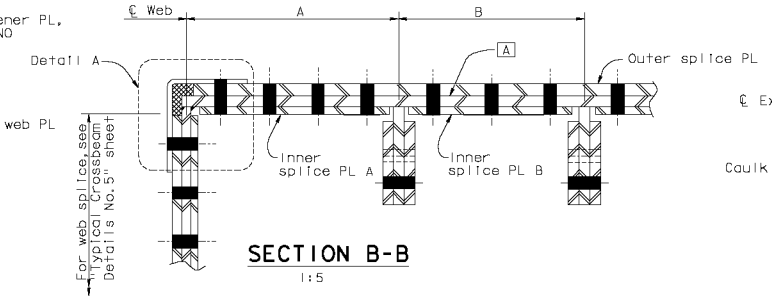

SECTION B-B
1:5

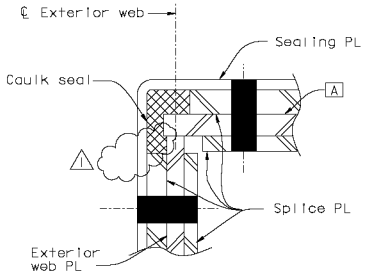

DETAIL A
1:2.5

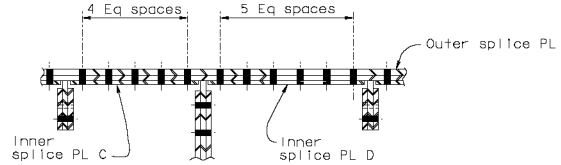

SECTION C-C
1:10

SPLICE PLATE TABLE	
Plate Type	Dimensions
Inner PL "A"	PL 16x900x375
Inner PL "B"	PL 16x900x320
Inner PL "C"	PL 16x900x440 1
Inner PL "D"	PL 18x900x270
Outer PL	PL 25x900x9960

NOTES:

1. For details not shown, see "Typical Crossbeam Details" sheets.

Daniel D. Turner
REGISTERED PROFESSIONAL ENGINEER No. C 65033 Exp. 06/30/13 CIVIL STATE OF CALIFORNIA
FOR REVISIONS ONLY

CONTRACT CHANGE ORDER NO. ____
SHEET ___ OF ___

REQUESTS FOR INFORMATION NOT ADDRESSED IN THIS CCO REMAIN IN FORCE

ALL DIMENSIONS ARE IN MILLIMETERS UNLESS OTHERWISE SHOWN

R. Valizadeh/V. Toan/Y.L./W.L./F.C.
DESIGN OVERSIGHT
SIGN OFF DATE 09/01/11

MARK	DATE	DESCRIPTIONS	BY	CH'D	CCO#
1	09/01/11	EAST END OBG	DT	GB	87

REVISIONS

	BY	CHECKED
DESIGN	G. Baker	P. Ritchie
DETAILS	S. Camo	T. McMeans
QUANTITIES	D. Turner	M. Roberts

PREPARED FOR THE STATE OF CALIFORNIA DEPARTMENT OF TRANSPORTATION

R. Manzanarez
PROJECT ENGINEER

BRIDGE NO. 34-0006L/R
KILOMETER POST 13.2/13.9

SAN FRANCISCO OAKLAND BAY BRIDGE
EAST SPAN SEISMIC SAFETY PROJECT
SELF-ANCHORED SUSPENSION BRIDGE
(SUPERSTRUCTURE & TOWER)
CROSSBEAM AT PIER E2 NO. 4

Rev. Date: 5-18-98

ORIGINAL SCALE IN MILLIMETERS FOR REDUCED PLANS 0 10 20 30 40 50 60 70 80 90 100

CU 04
EA 0120F1

DISREGARD PRINTS BEARING EARLIER REVISION DATES

REVISION DATES (PRELIMINARY STAGE ONLY) 05/07/99 09/29/99 03/01/01 09/28/02 01/09/03 11/01/05

SHEET 303R1 OF

FILE => I:\bb\04-012001\sds\contract plans and cco\cco\cco*87\1-original 09-01-11\dgn\agcrs15.dgn

100 % PS&E

DATE PLOTTED => 30 AUG 2011 TIME PLOTTED => 10:31:57

USERNAME => PTom

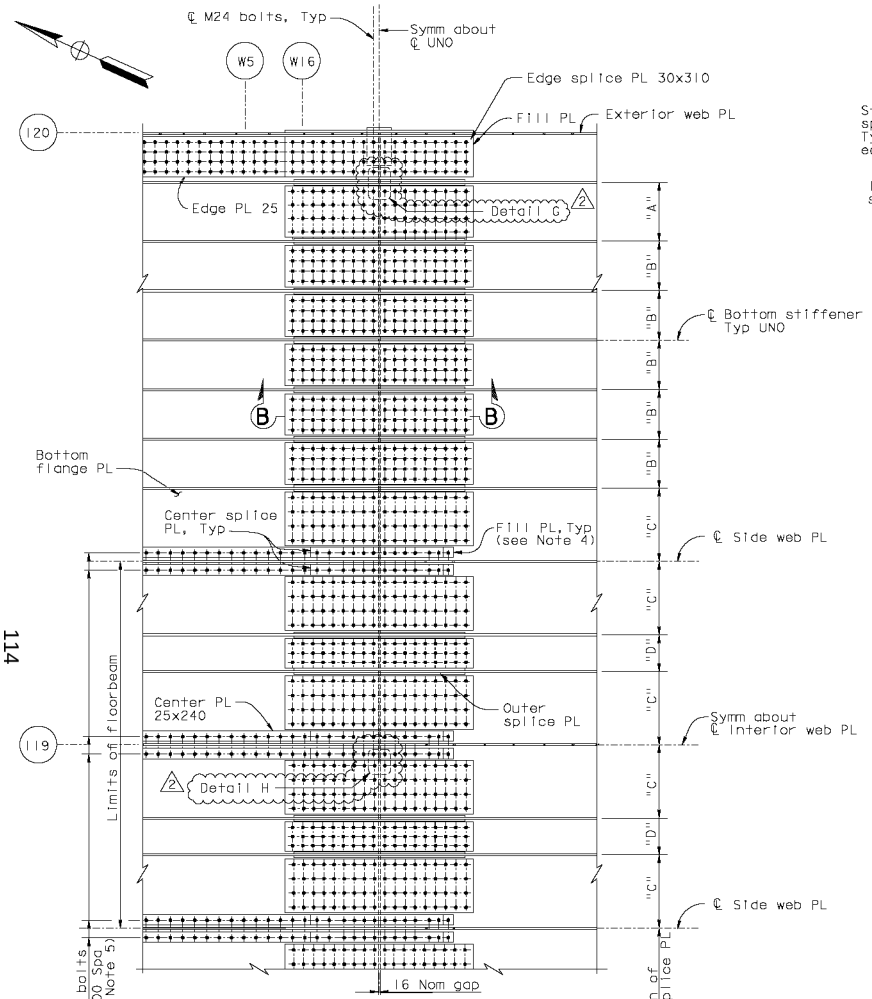

BOTTOM FLANGE SPLICE
DETAIL F
1:20

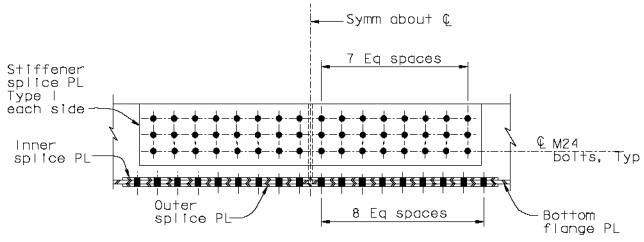

SECTION B-B
1:10

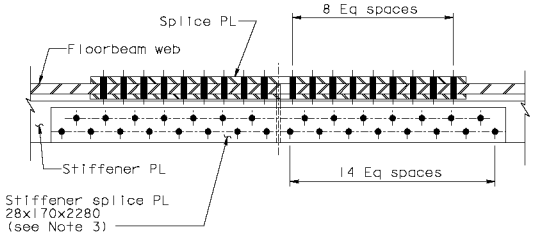

SECTION D-D
1:10

SPLICE PLATE TABLE	
Plate Type	Dimensions
Inner PL "A"	PL 25x1620x420
Inner PL "B"	PL 25x1620x340
Inner PL "C"	PL 25x1620x440
Inner PL "D"	PL 25x1620x240
Outer PL	PL 30x1620x9980
Stiff PL Type I	PL 30x250x1440

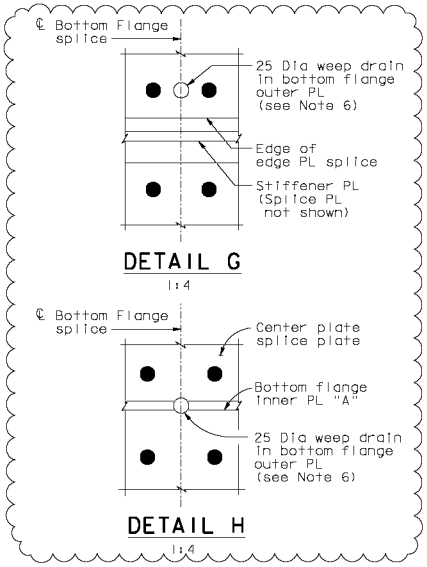

NOTES:

1. For details not shown, see "Typical Crossbeam Details No. 8" sheet.
2. For details not shown, see "Typical Crossbeam Details" sheets.
3. At the Contractor's option, the stiffener splice PL length may be reduced to 1740, subject to review and approval of the Engineer.
4. For crossbeam segments which vary in depth within the specified tolerances, the Contractor shall use fill plates in the bottom splice to correct for the variation. Fill plates shown on the plans shall be adjusted as required to bring splice plates into contact.
5. At the Contractor's option, it is acceptable to space the M30 bolts at 90 mm, subject to review and approval of the Engineer.
2. 6. Inside surfaces of weep drain shall be finish painted.

Daniel J. Turner REGISTERED PROFESSIONAL ENGINEER No. C 65033 Exp. 06/30/13 CIVIL STATE OF CALIFORNIA

FOR REVISIONS ONLY

CONTRACT CHANGE ORDER NO. ____
SHEET ___ OF ___

REQUESTS FOR INFORMATION NOT ADDRESSED IN THIS CCO REMAIN IN FORCE

ALL DIMENSIONS ARE IN MILLIMETERS UNLESS OTHERWISE SHOWN

DIST.	COUNTY	ROUTE	KILOMETER POST TOTAL PROJECT	SHEET NO.	TOTAL SHEETS
04	SF	80	13.2/13.9	721R2	1204

George Baker
REGISTERED ENGINEER - CIVIL
12-6-04
PLANS APPROVAL DATE
REGISTERED PROFESSIONAL ENGINEER George S. Baker No. C57112 Exp. 12/31/05 CIVIL STATE OF CALIFORNIA

The State of California or its officers or agents shall not be responsible for the accuracy or completeness of electronic copies of this plan sheet.

T.Y. LIN / MOFFATT & NICHOL
825 BATTERY STREET
SAN FRANCISCO, CA 94111

Caltrans now has a web site! To get to the web site, go to: http://www.dot.ca.gov

SAN FRANCISCO OAKLAND BAY BRIDGE
EAST SPAN SEISMIC SAFETY PROJECT
SELF-ANCHORED SUSPENSION BRIDGE
(SUPERSTRUCTURE & TOWER)
CROSSBEAM AT PIER E2 NO. 5

R. Valizadeh/V. Toan/Y.L./W.L./F.C.
DESIGN OVERSIGHT
SIGN OFF DATE 04/30/12

MARK	DATE	DESCRIPTIONS	BY	CH'D	CCO#
2	04/30/12	OBC & CROSSBEAM SEALING	DT	HT	244
1	09/01/11	EAST END OBC	DT	GB	87

REVISIONS

DESIGN BY G. Baker CHECKED P. Ritchie
DETAILS BY D. Veytsman CHECKED T. McMeans
QUANTITIES BY D. Turner CHECKED M. Roberts

PREPARED FOR THE STATE OF CALIFORNIA DEPARTMENT OF TRANSPORTATION

R. Manzanarez
PROJECT ENGINEER

BRIDGE NO. 34-0006L/R
KILOMETER POST 13.2/13.9

Rev. Date: 5-18-98

ORIGINAL SCALE IN MILLIMETERS FOR REDUCED PLANS 0 10 20 30 40 50 60 70 80 90 100

CU 04
EA 0120F1

DISREGARD PRINTS BEARING EARLIER REVISION DATES

REVISION DATES (PRELIMINARY STAGE ONLY)

SHEET 304R2 OF

FILE => I:\bb\04-012001\sas\contract plans and cca\cco\cco*244\1-original 04-30-12\dgn\ggrs16.dgn

USERNAME => DWitrow DATE PLOTTED => 30 APR 2012 TIME PLOTTED => 13:40:16

100 % PS&E

DIST.	COUNTY	ROUTE	KILOMETER POST TOTAL PROJECT	SHEET NO.	TOTAL SHEETS
04	SF	80	13.2/13.9	722R2	1204

George Baker
REGISTERED ENGINEER - CIVIL
12-6-04
PLANS APPROVAL DATE
The State of California or its officers or agents shall not be responsible for the accuracy or completeness of electronic copies of this plan sheet.

REGISTERED PROFESSIONAL ENGINEER George S. Baker No. C57112 Exp. 12/31/05 CIVIL STATE OF CALIFORNIA

T.Y. LIN / MOFFATT & NICHOL
825 BATTERY STREET
SAN FRANCISCO, CA 94111

Caltrans now has a web site! To get to the web site, go to: http://www.dot.ca.gov

Caltrans Metric

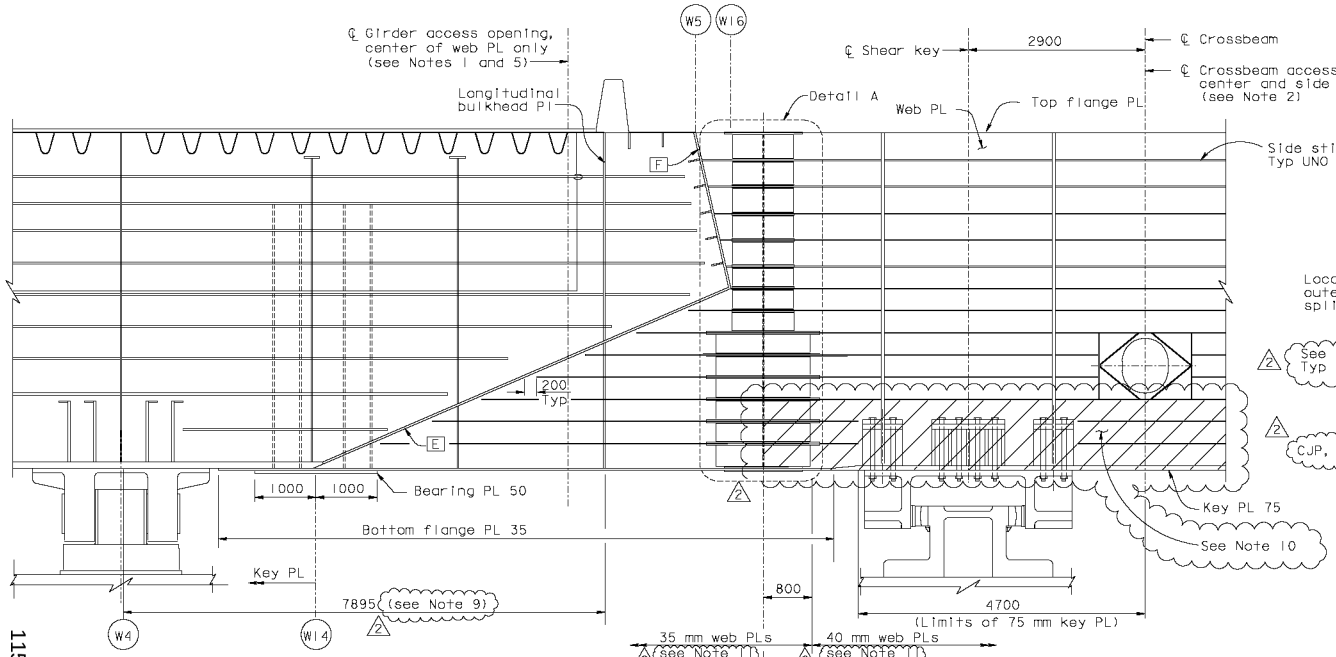

SECTION C-C
1:40

SPLICE PLATE TABLE	
Plate Type	Dimensions
Inner Splice PL "A"	PL 22x1000x390
Inner Splice PL "B"	PL 22x1620x310
Outer Splice PL "D"	PL 28x1000x3170
Inner Splice PL "C"	PL 22x1000x310
Outer Splice PL "E"	PL 28x1620x2140

LEGEND:
"Indicates TTP Web PL"

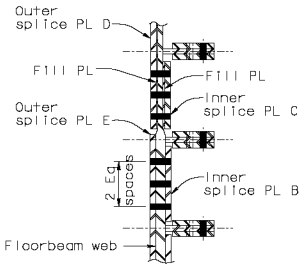

SECTION A-A
1:10

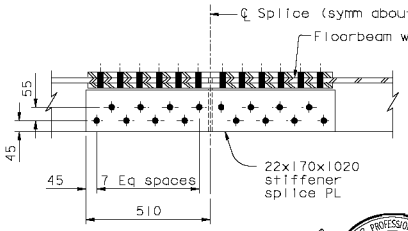

SECTION B-B
1:10

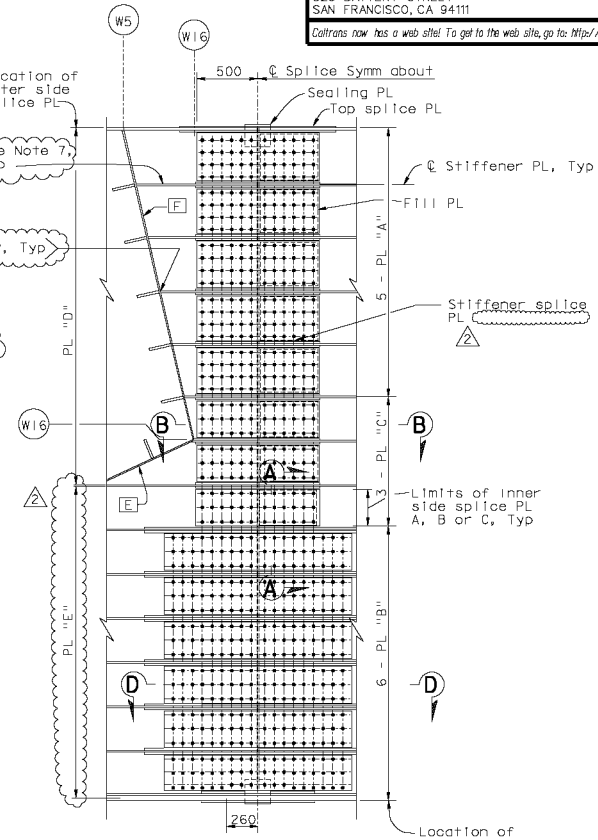

WEB SPLICE DETAIL A
1:20

NOTES:

1. For details at girder access opening, see "Typical Girder Details No.15" sheet.
2. For details of crossbeam access opening not shown, see "Typical Crossbeam Details No.6" sheet.
3. For details not shown, see "Typical Crossbeam Details" sheets.
4. For layout of E2 floorbeam web, see "Girder At Pier E2 No.4" sheet.
5. For girder access locations, see "Girder Access Details No.3" sheet.
6. For details not shown, see "Typical Crossbeam Details No.5" sheet.
7. Transitions not required for crossbeam web stiffeners terminating at Face F.
8. For Section D-D, see "Crossbeam At Pier E2 No.5" sheet.
9. For the EB girder, this dimension is 7885.
10. Through Thickness Properties (TTP) area shown applies to PP118.7, 119.0 and 119.3.
11. It is acceptable to extend the limit of the 40 mm web PL to the centerline of the splice from 800 mm from the splice, provided the fill plates on the 35 mm web are placed on the interior faces of the crossbeam.

ALL DIMENSIONS ARE IN MILLIMETERS UNLESS OTHERWISE SHOWN

REGISTERED PROFESSIONAL ENGINEER Daniel A. Turner No. C 65033 Exp. 06/30/13 CIVIL STATE OF CALIFORNIA

FOR REVISIONS ONLY

CONTRACT CHANGE ORDER NO. ____
SHEET ___ OF ___

REQUESTS FOR INFORMATION NOT ADDRESSED IN THIS CCO REMAIN IN FORCE

R. Valizadeh/V. Toan/Y.L./W.L./F.C.
DESIGN OVERSIGHT
SIGN OFF DATE 09/01/11

MARK	DATE	DESCRIPTIONS	BY	CH'D	CCO#
2	09/01/11	EAST END OBG	DT	GB	87
1	11/05/10	PP119 ACCESS & PP125 PLATES	GB	DT	86

REVISIONS

	BY	CHECKED
DESIGN	G. Baker	P. Ritchie
DETAILS	D. Veytsman	T. McMeans
QUANTITIES	D. Turner	M. Roberts

PREPARED FOR THE STATE OF CALIFORNIA DEPARTMENT OF TRANSPORTATION

R. Manzanarez
PROJECT ENGINEER

BRIDGE NO. 34-0006L/R
KILOMETER POST 13.2/13.9

SAN FRANCISCO OAKLAND BAY BRIDGE
EAST SPAN SEISMIC SAFETY PROJECT
SELF-ANCHORED SUSPENSION BRIDGE
(SUPERSTRUCTURE & TOWER)

CROSSBEAM AT PIER E2 NO. 6

Rev. Date: 5-18-98

ORIGINAL SCALE IN MILLIMETERS FOR REDUCED PLANS 0 10 20 30 40 50 60 70 80 90 100

CU 04
EA 0120F1

DISREGARD PRINTS BEARING EARLIER REVISION DATES

REVISION DATES (PRELIMINARY STAGE ONLY) 12/07/01 12/07/01 12/07/01 12/07/01 12/07/01 12/07/05

SHEET 305R2 OF

FILE => I:\bb\04-012001\sds\contract plans and cco\cco\cco#87\1-original 09-01-11\dgn\agcrs17.dgn

USERNAME => PTom DATE PLOTTED => 30 AUG 2011 TIME PLOTTED => 10:35:34

100 % PS&E

DIST.	COUNTY	ROUTE	KILOMETER POST TOTAL PROJECT	SHEET NO.	TOTAL SHEETS
04	SF	80	13.2/13.9	722S1R1	1204

REGISTERED ENGINEER - CIVIL

04-18-12

PLANS APPROVAL DATE

The State of California or its officers or agents shall not be responsible for the accuracy or completeness of electronic copies of this plan sheet.

REGISTERED PROFESSIONAL ENGINEER Marwan N. Nader No. C 054426 Exp. 12/31/13 CIVIL STATE OF CALIFORNIA

T.Y. LIN / MOFFATT & NICHOL
825 BATTERY STREET
SAN FRANCISCO, CA 94111

Caltrans now has a web site! To get to the web site, go to: http://www.dot.ca.gov

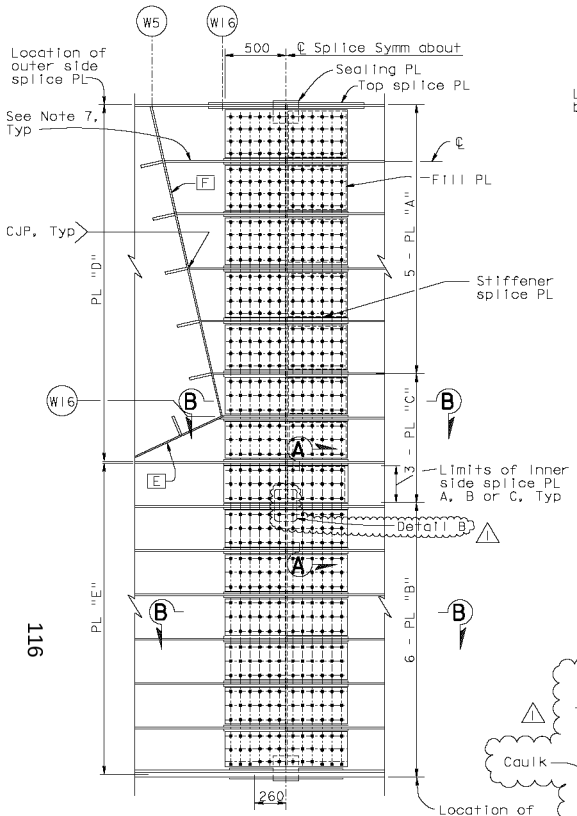

WEB SPLICE DETAIL A

1:20

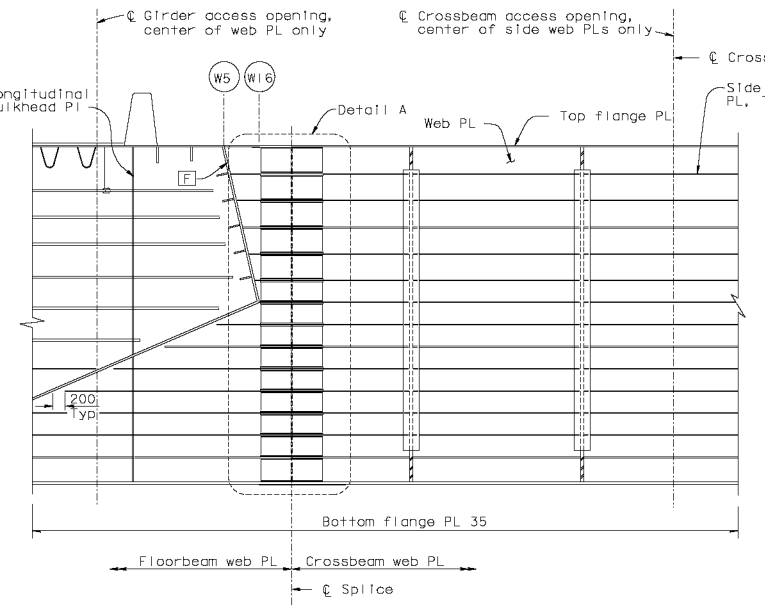

SECTION C'-C'

1:40

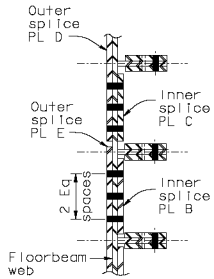

SECTION A-A

1:10

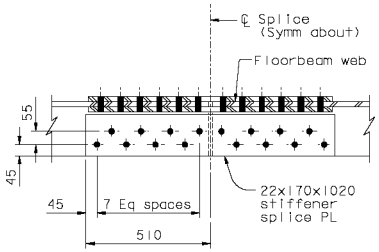

SECTION B-B

1:10

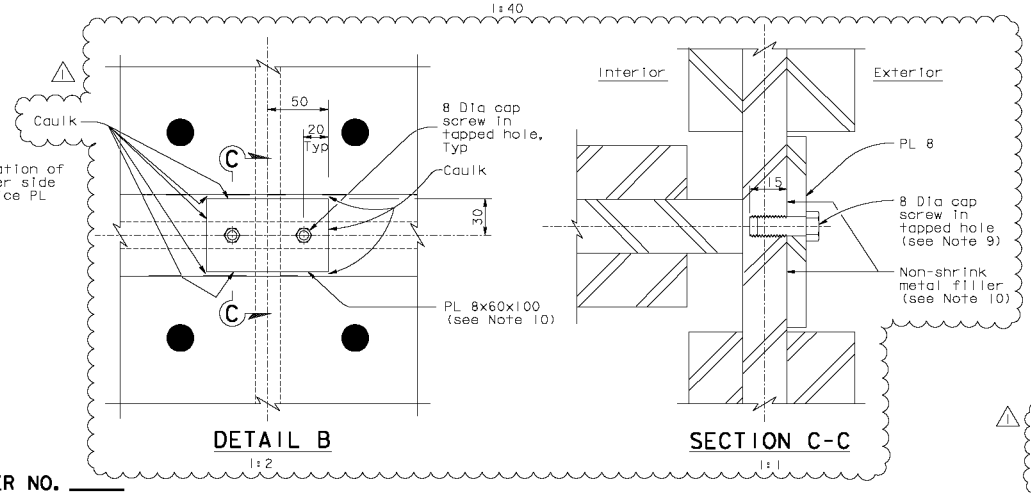

DETAIL B

1:2

SECTION C-C

1:1

NOTES:

1. For details at girder access opening, see "Typical Girder Details No. 15" sheet.
2. For details of crossbeam access opening not shown, see "Typical Crossbeam Details No. 6" sheet.
3. For details not shown, see "Typical Crossbeam Details" sheets.
4. For layout of E2 floorbeam web, see "Girder At Pier E2 No. 4" sheet.
5. For girder access locations, see "Girder Access Details No. 3" sheet.
6. For details not shown, see "Typical Crossbeam Details No. 5" sheet.
7. Transitions not required for crossbeam web stiffeners terminating at Face F.
8. For Section D-D, see "Crossbeam At Pier E2 No. 5" sheet.
9. Cap screws shall have a minimum embedment length of 12 mm in the crossbeam web plate.
10. Non-shrink metal filler shall be applied to fill gaps and provide a level faying surface for the PL 8.

100 % PS&E

SPLICE PLATE TABLE	
Plate Type	Dimensions
Inner Splice PL "A"	PL 22x1000x390
Inner Splice PL "B"	PL 22x1000x310
Outer Splice PL "D"	PL 28x1000x3170
Inner Splice PL "C"	PL 22x1000x310
Outer Splice PL "E"	PL 28x1000x2140

CONTRACT CHANGE ORDER NO. ____
SHEET ____ OF ____

REQUESTS FOR INFORMATION NOT ADDRESSED IN THIS CCO REMAIN IN FORCE

ALL DIMENSIONS ARE IN MILLIMETERS UNLESS OTHERWISE SHOWN

R. Valizadeh/V. Toan/Y.L./W.L./F.C.
DESIGN OVERSIGHT
SIGN OFF DATE 04/30/12

MARK	DATE	DESCRIPTIONS	BY	CH'D	CCO#
1	04/30/12	OBG & CROSSBEAM SEALING	DT	HT	244
0	04/18/12	EAST END OBG	GB	MN	87

REVISIONS

	BY	CHECKED
DESIGN	G. Baker	M. Nader
DETAILS	G. Baker	D. Turner
QUANTITIES	G. Baker	D. Turner

PREPARED FOR THE STATE OF CALIFORNIA DEPARTMENT OF TRANSPORTATION

R. Manzanarez
PROJECT ENGINEER

BRIDGE NO. 34-0006L/R
KILOMETER POST 13.2/13.9

SAN FRANCISCO OAKLAND BAY BRIDGE
EAST SPAN SEISMIC SAFETY PROJECT
SELF-ANCHORED SUSPENSION BRIDGE
(SUPERSTRUCTURE & TOWER)

CROSSBEAM AT PIER E2 NO. 6A

Rev. Date: 5-18-98

ORIGINAL SCALE IN MILLIMETERS FOR REDUCED PLANS 0 10 20 30 40 50 60 70 80 90 100

CU 04
EA 0120F1

DISREGARD PRINTS BEARING EARLIER REVISION DATES 04/18/12

REVISION DATES (PRELIMINARY STAGE ONLY)

SHEET 305S1R1 OF

FILE => I:\bb\04-012001\sas\contract plans and cca\cco\cco#244\1-original 04-30-12\dgn\dgcrs17a.dgn

USERNAME => DWinrow DATE PLOTTED => 30 APR 2012 TIME PLOTTED => 13:41:21

DIST.	COUNTY	ROUTE	KILOMETER POST TOTAL PROJECT	SHEET NO.	TOTAL SHEETS
04	SF	80	13.2/13.9	723R1	1204

George Baker
REGISTERED ENGINEER - CIVIL
12-6-04
PLANS APPROVAL DATE

REGISTERED PROFESSIONAL ENGINEER George S. Baker No. C 57112 Exp. 12/31/05 CIVIL STATE OF CALIFORNIA

The State of California or its officers or agents shall not be responsible for the accuracy or completeness of electronic copies of this plan sheet.

T.Y. LIN / MOFFATT & NICHOL
825 BATTERY STREET
SAN FRANCISCO, CA 94111

Caltrans now has a web site! To get to the web site, go to: http://www.dot.ca.gov

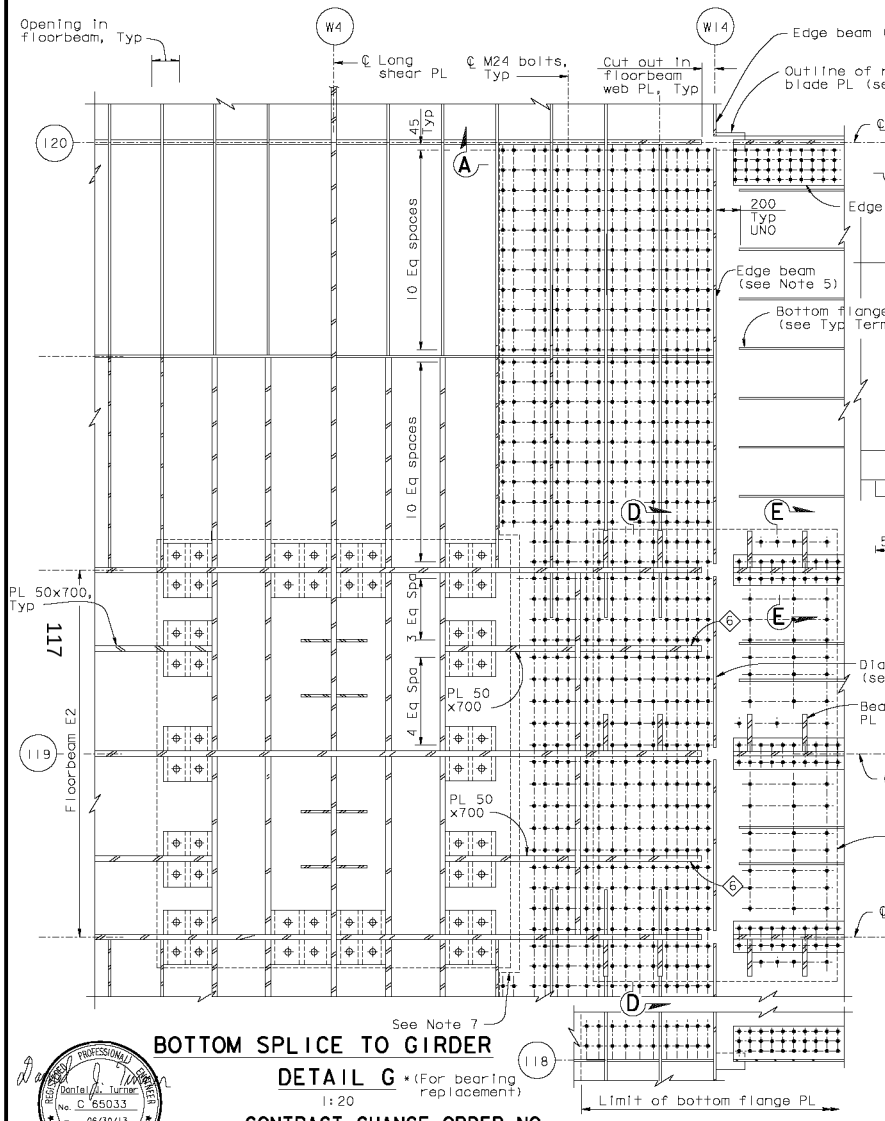

BOTTOM SPLICE TO GIRDER

DETAIL G *(For bearing replacement)

1:20

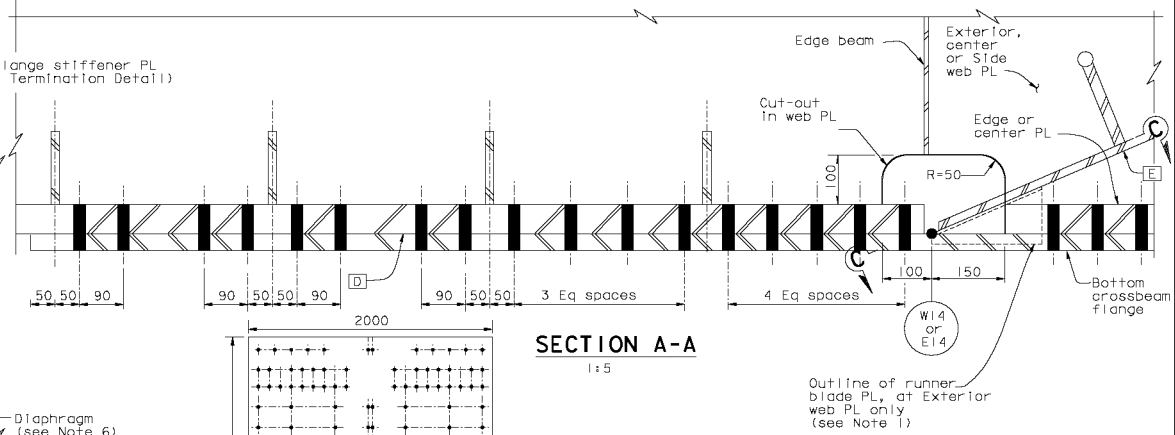

SECTION A-A

1:5

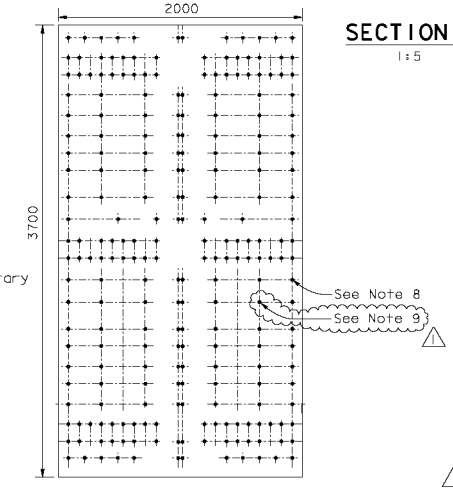

BEARING PLATE AT TEMPORARY SUPPORT AT LINE E13/W13 - PLAN

NOTES:

1. For details of runner blade, see "Typical Crossbeam Details No.10" sheet.
2. For Section C-C, see "Typical Crossbeam Details No.9" sheet.
3. For details not shown, see "Typical Crossbeam Details" sheets.
4. For Sections D-D and E-E, see "Crossbeam At Pier E2 No.3" sheet.
5. For edge beam, see longitudinal shear PL Type 1 in "Typical Girder Details No.7" sheet.
6. For diaphragm details, see "Girder At Pier E2 No.6" sheet.
7. Cope crossbeam bottom flange to clear bearing top PL.
8. Stitch and sealing bolts shall be detailed to avoid stiffeners.
9. At the Contractor's option, standard oversize holes may be used for anchor bolts of the temporary bearings at E13/W13 and E14/W14.

Daniel J. Turner
REGISTERED PROFESSIONAL ENGINEER Daniel J. Turner No. C 65033 Exp. 06/30/13 CIVIL STATE OF CALIFORNIA

FOR REVISIONS ONLY

CONTRACT CHANGE ORDER NO. ____
SHEET ___ OF ___

REQUESTS FOR INFORMATION NOT ADDRESSED IN THIS CCO REMAIN IN FORCE

ALL DIMENSIONS ARE IN MILLIMETERS UNLESS OTHERWISE SHOWN

R. Valizadeh/V. Toan/Y.L./W.L./F.C.
DESIGN OVERSIGHT
SIGN OFF DATE 09/01/11

MARK	DATE	DESCRIPTIONS	BY	CH'D	CCO#
1	09/01/11	EAST END OBG	DT	GB	87

REVISIONS

	BY	CHECKED
DESIGN	G. Baker	P. Ritchie
DETAILS	D. Veytsman	T. McMeans
QUANTITIES	D. Turner	M. Roberts

PREPARED FOR THE STATE OF CALIFORNIA DEPARTMENT OF TRANSPORTATION

R. Manzanarez
PROJECT ENGINEER

BRIDGE NO. 34-0006L/R
KILOMETER POST 13.2/13.9

SAN FRANCISCO OAKLAND BAY BRIDGE
EAST SPAN SEISMIC SAFETY PROJECT
SELF-ANCHORED SUSPENSION BRIDGE
(SUPERSTRUCTURE & TOWER)

CROSSBEAM AT PIER E2 NO. 7

Rev. Date: 5-18-98

ORIGINAL SCALE IN MILLIMETERS FOR REDUCED PLANS 0 10 20 30 40 50 60 70 80 90 100

CU 04
EA 0120F1

DISREGARD PRINTS BEARING EARLIER REVISION DATES

REVISION DATES (PRELIMINARY STAGE ONLY)

SHEET 306R1 OF

FILE => I:\bb\04-012001\sas\contract plans and cco\cco\cco*87\1-original 09-01-11\dgn\agcrs18.dgn

100 % PS&E

DATE PLOTTED => 30 AUG 2011 TIME PLOTTED => 10:39:19

USERNAME => PTom

DIST.	COUNTY	ROUTE	KILOMETER POST TOTAL PROJECT	SHEET NO.	TOTAL SHEETS
04	SF	80	13.2/13.9	882R1	1204

REGISTERED ENGINEER - CIVIL

12-6-04
PLANS APPROVAL DATE

The State of California or its officers or agents shall not be responsible for the accuracy or completeness of electronic copies of this plan sheet.

REGISTERED PROFESSIONAL ENGINEER Marwan N. Nader No. C 054426 Exp. 12/31/09 CIVIL STATE OF CALIFORNIA

T.Y. LIN / MOFFATT & NICHOL
825 BATTERY STREET
SAN FRANCISCO, CA 94111

Caltrans now has a web site! To get to the web site, go to: http://www.dot.ca.gov

LEGEND:
CR Center of Rotation

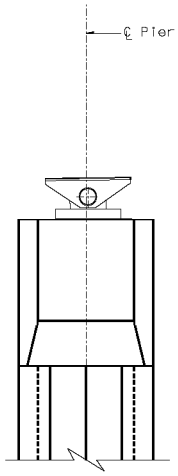

SIDE ELEVATION
1:200
(Looking South)

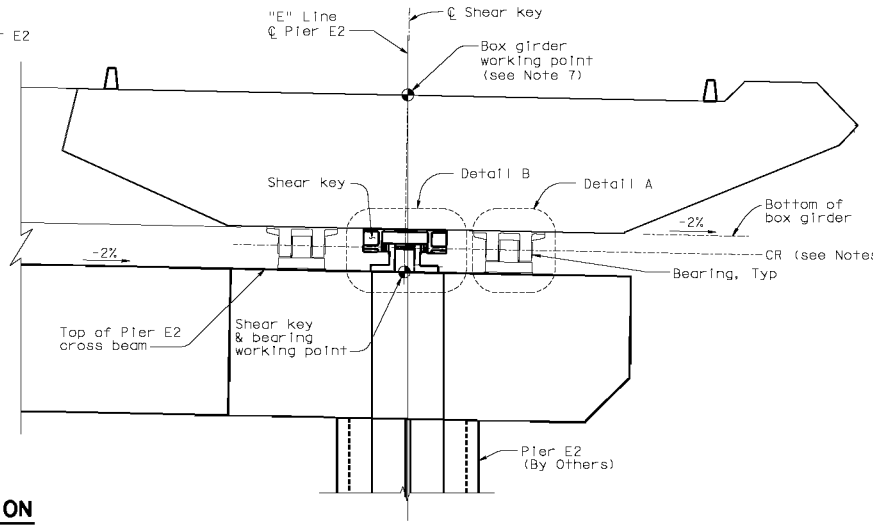

KEY ELEVATION (Looking East)
1:100

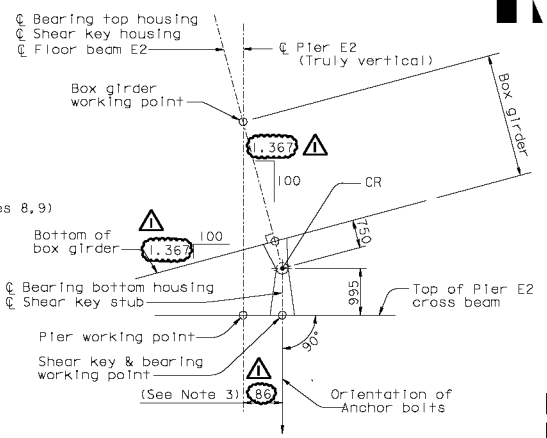

SHEAR KEY AND BEARING LOCATION
NTS
(Looking South)

REQUESTS FOR INFORMATION NOT ADDRESSED IN THIS CCO REMAIN IN FORCE					
1	10/26/08	E2 CROSS BEAM	MN	NV	71
MARK	DATE	DESCRIPTIONS	BY	CH'D	CCO#
REVISIONS					

CONTRACT CHANGE ORDER NO. ____
SHEET ___ OF ___

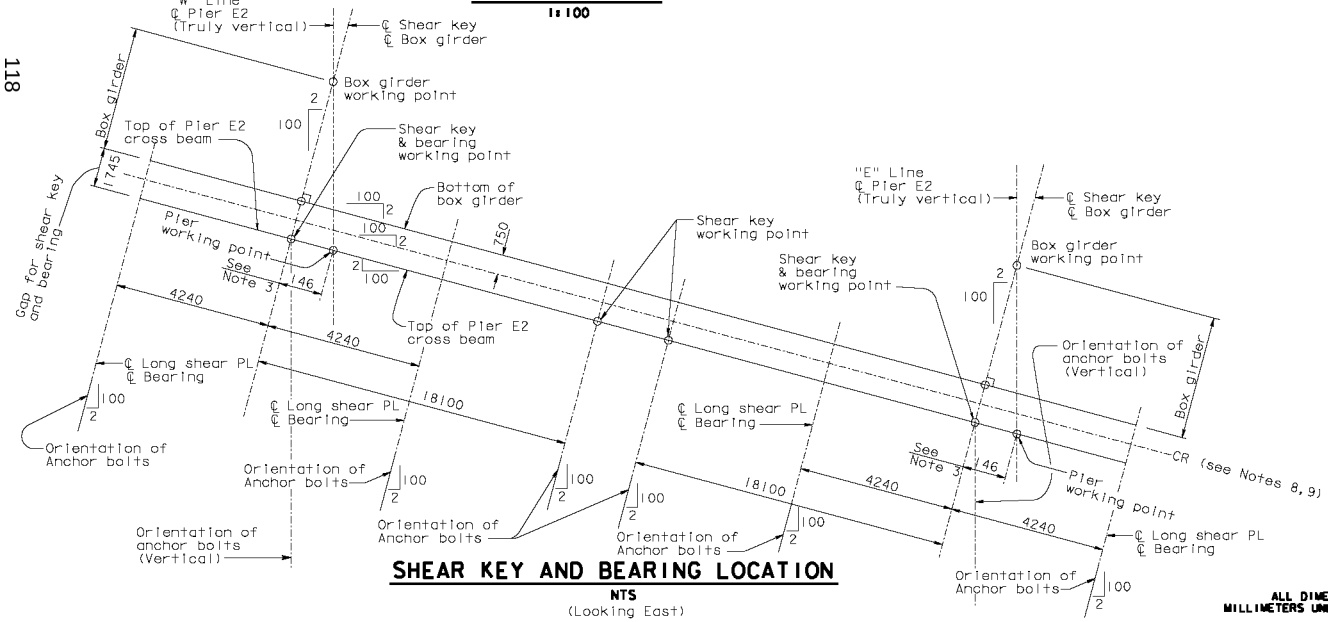

SHEAR KEY AND BEARING LOCATION
NTS
(Looking East)

ALL DIMENSIONS ARE IN MILLIMETERS UNLESS OTHERWISE SHOWN

NOTES:

1. For Detail A, see "Pier E2 Bearing Details No.1" sheet.
2. Detail B is a section view at center line of shear key. For Detail B, see "Pier E2 Shear Key Details No.1" sheet.
3. Offset value is shown for information only. The Contractor shall calculate the offset and verify it in the field before placing the bearings and shear key.
4. The Contractor shall submit the construction sequence of the shear key and bearings based on his ways and means for the Engineer's approval.
5. For floor beam E2, see "Girder at Pier E2" sheets.
6. For longitudinal shear plate, see "Girder at East Transition No.1" sheet.
7. Box girder work point is on the finished profile grade which is the top of 50 mm overlay.
8. At the Contractor's option, small holes may be drilled through the bearings and shear keys for use with a laser alignment method. All holes shall be plugged with tapped screws after bearing and shear key installation.
9. The center of rotation CR shall be a straight line through the pin center of all four bearings, and perpendicular to the bridge axis direction.

100 % PS&E

DATE PLOTTED => 08 OCT 2008 TIME PLOTTED => 15:33:19

USERNAME => pfan

R. Valizadeh/V. Toan/Y.L./W.L./F.C.
DESIGN OVERSIGHT
Reza Valizadeh / Vong Toan / Y. Liu
SIGN OFF DATE 09/28/08

Rev. Date: 5-18-98

DESIGN	BY M. Nader	CHECKED L. Rus
DETAILS	BY N. Vo	CHECKED J. Leventini
QUANTITIES	BY N. Vo	CHECKED J. Leventini

PREPARED FOR THE STATE OF CALIFORNIA DEPARTMENT OF TRANSPORTATION

R. Manzanarez
PROJECT ENGINEER

BRIDGE NO. 34-0006L/R
KILOMETER POST 13.2/13.9

SAN FRANCISCO OAKLAND BAY BRIDGE
EAST SPAN SEISMIC SAFETY PROJECT
SELF-ANCHORED SUSPENSION BRIDGE
(SUPERSTRUCTURE & TOWER)

PIER E2 BEARING AND SHEAR KEY LAYOUT

ORIGINAL SCALE IN MILLIMETERS FOR REDUCED PLANS 0 10 20 30 40 50 60 70 80 90 100

CU 04
EA 0120F1

DISREGARD PRINTS BEARING EARLIER REVISION DATES

REVISION DATES (PRELIMINARY STAGE ONLY) 01/01/02 12/31/02 12/31/06

SHEET 465R1 OF

FILE => I:\bb\04-012001\sds\contract plans and cco\cco\in progress\cco#71\original 09-26-08\dksrd01.dgn

DIST.	COUNTY	ROUTE	KILOMETER POST TOTAL PROJECT	SHEET NO.	TOTAL SHEETS
04	SF	80	13.2/13.9	882ARIC	1204

REGISTERED ENGINEER - CIVIL

12-6-04

PLANS APPROVAL DATE

The State of California or its officers or agents shall not be responsible for the accuracy or completeness of electronic copies of this plan sheet.

REGISTERED PROFESSIONAL ENGINEER No. Exp. CIVIL STATE OF CALIFORNIA

T.Y. LIN / MOFFATT & NICHOL
825 BATTERY STREET
SAN FRANCISCO, CA 94111

Caltrans now has a web site! To get to the web site, go to: http://www.dot.ca.gov

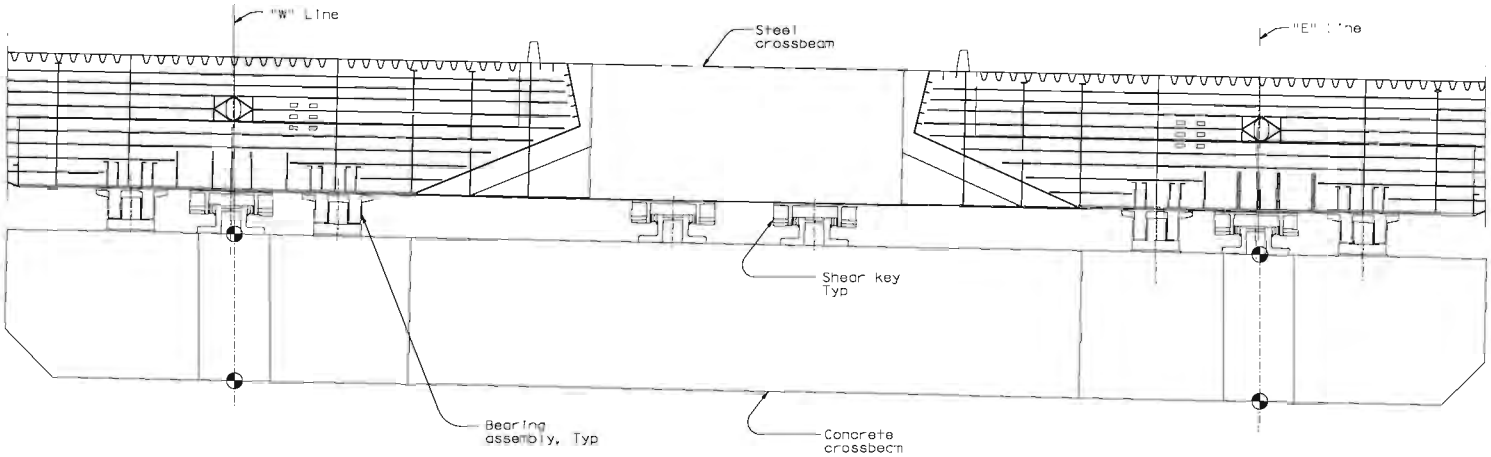

ELEVATION (Looking East)

CLEAN UP/ CLARIFICATION

BEARING ASSEMBLY TABLE

Location	Bearing Typ	Number of bearing units per location	Design Load (kN per bearing) Service Compression	Service Uplift	Service Long or Trans	Ultimate Load Condition	Ultimate Compression	Ultimate Uplift	Ultimate Long Trans	Design rotation (radians) Service Trans Axis	Service Long Axis	Service Vert Axis	Ultimate Trans Axis	Ultimate Long Axis	Ultimate Vert Axis	Design Displacement (mm) Service Trans Axis	Service Long Axis	Service Vert Axis	Ultimate Trans Axis	Ultimate Long Axis	Ultimate Vert Axis
"W" Line	Spherical Bushing	2	35000	0	0	Shear Key Engaged	86000	32000	0	0.009	0	0	0.130	0.032	0.032	5	5	0	20	20	2**
						Shear Key Failed*	68000	17000	13300 30500												
"E" Line	Spherical Bushing	2	35000	0	0	Shear Key Engaged	86000	32000	0	0.009	0	0	0.130	0.032	0.032	5	5	0	20	20	2**
						Shear Key Failed*	68000	17000	13300 30500												

RF1 =760 RO

* Seismic load factor x= 1.0 (For shear key engaged load condition, x= 1.4).
** For uplifting only.

Installation Misalignment Tolerances (Per bearing/ Shear Key)	Trans./Long./Vertical	Rotational
	± 2 mm	± 0.5°

SHEAR KEY ASSEMBLY TABLE

Location	Number of Shear Key Units Per Location	Design Load (kN per shear key) Service Trans	Service Long	Service Vert	Ultimate Trans	Ultimate Long	Ultimate Vert	Design rotation (radians) Service Trans Axis	Service Long Axis	Service Vert Axis	Ultimate Trans Axis	Ultimate Long Axis	Ultimate Vert Axis	Design Displacement (mm) Service Trans Axis	Service Long Axis	Service Vert Axis	Ultimate Trans Axis	Ultimate Long Axis	Ultimate Vert Axis
"W" Line	1	9000	4500	0	42500	35000	0	0.009	0	0	0.130	0.130	0.130	0	0	10	0	0	20
"E" Line	1	9000	4500	0	42500	35000	0	0.009	0	0	0.130	0.130	0.130	0	0	10	0	0	20
Crossbeam	2	9000	1	0	42500	0	0	0.009	0	0	0.130	0.130	0.130	0	5	10	0	20	20

ALL DIMENSIONS ARE IN MILLIMETERS UNLESS OTHERWISE SHOWN

R. Valizadeh/Y. Tech/Y.L./W.L./F.C.
DESIGN OVERSIGHT

SIGN OFF DATE 09/26/08

MARK	DATE	DESCRIPTIONS	BY	CH'D	CCO#
1	09/26/08	E2 CROSS BEAM	VN	NV	71

REVISIONS

DESIGN BY M. Nader CHECKED L. Ruis
DETAILS BY N. Vo CHECKED J. Leventini
QUANTITIES BY N. Vo CHECKED J. Leventini

PREPARED FOR THE STATE OF CALIFORNIA DEPARTMENT OF TRANSPORTATION

R. Manzanarez
PROJECT ENGINEER

BRIDGE NO. 34-0006L/R
KILOMETER POST 13.2/13.9

SAN FRANCISCO OAKLAND BAY BRIDGE
EAST SPAN SEISMIC SAFETY PROJECT
SELF-ANCHORED SUSPENSION BRIDGE
(SUPERSTRUCTURE & TOWER)

PIER E2 BEARING AND SHEAR KEY DESIGN FORCES

Rev. Date 5-19-98

ENGINE SCALE IN MILLIMETERS FOR REDUCED PLANS 0 10 20 30 40 50 60 70 80 90 100

CU 04
EA 0120F1

DISREGARD PRINTS BEARING EARLIER REVISION DATES

REVISION DATES (PRELIMINARY STAGE ONLY)

SHEET 465 OF 1204

FILE => I:\bb\04-01200\sas\rfi updates\in-house reference plans\caksrc02.dgn

USERNAME => ALTIERIMARK DATE PLOTTED => 14 JUN 2013 TIME PLOTTED => 12:44:20

100 % PS&E

DIST.	COUNTY	ROUTE	KILOMETER POST TOTAL PROJECT	SHEET NO.	TOTAL SHEETS
04	SF	80	13.2/13.9	883R2	1204

REGISTERED ENGINEER - CIVIL

12-6-04

PLANS APPROVAL DATE

REGISTERED PROFESSIONAL ENGINEER Marwan N. Nader No. C 054426 Exp. 12/31/09 CIVIL STATE OF CALIFORNIA

The State of California or its officers or agents shall not be responsible for the accuracy or completeness of electronic copies of this plan sheet.

T.Y. LIN / MOFFATT & NICHOL
825 BATTERY STREET
SAN FRANCISCO, CA 94111

Caltrans now has a web site! To get to the web site, go to: http://www.dot.ca.gov

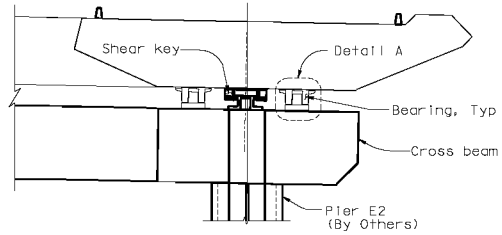

KEY ELEVATION
1:200

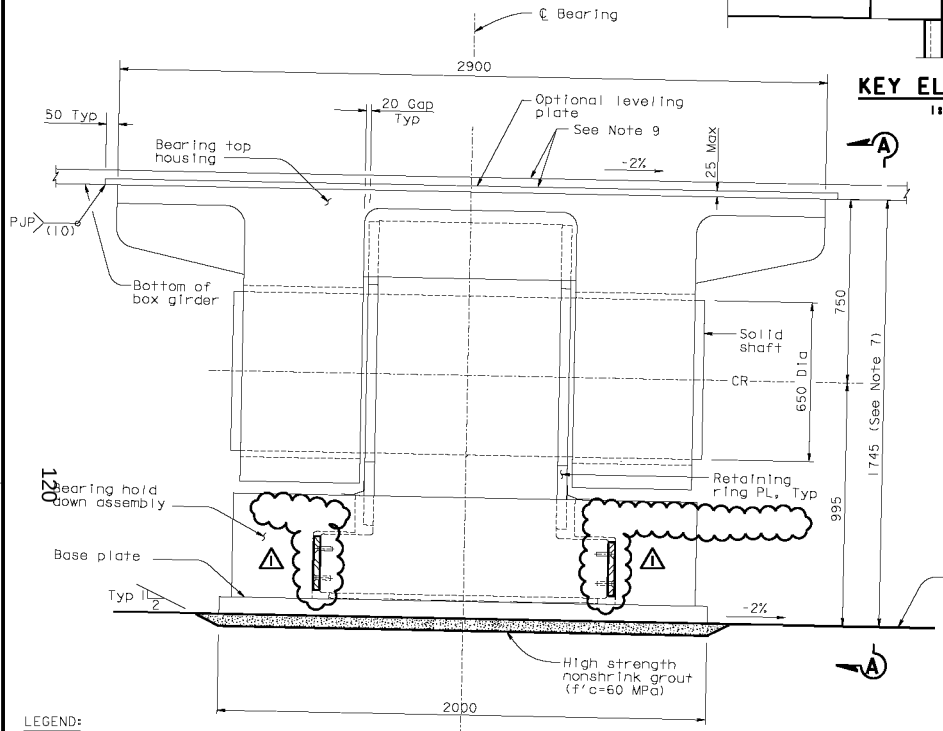

DETAIL A (Bearing Assembly)
1:10

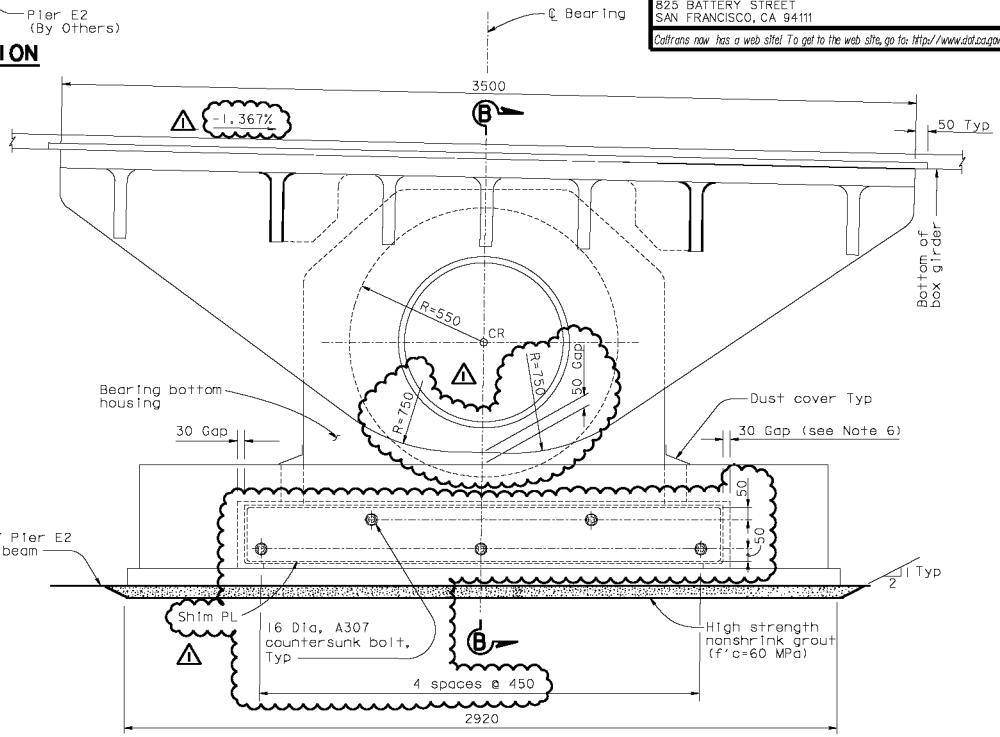

VIEW A-A
1:10

LEGEND:

CR Center of Rotation

NOTES:

1. For Section B-B, see "Pier E2 Bearing Details No. 2" sheet.
2. Connections to box girder and Pier E2 are not shown for clarity.
3. The bearing top housing and bearing hold down assembly shall be Structural Casting Grade 345.
4. The bearing bottom housing and the solid shaft shall be Structural Casting Grade 550.
5. The grout pad thickness is shown for information only. Before grout pour, Contractor shall verify in the field the grout pad thickness required to align the center of rotation of the shear key and bearings at 0.750 m from the bottom surface of the box girder and ensure center of rotation of all bearings and shear keys are aligned in the same axis.
6. Gaps shall be maintained during installation by using shims placed below the dust cover locations. Remove shims after grouting.
   1 Alternatively, 74 diameter spacing bolts may be installed. These shall remain undamaged during installation and shall be replaced with plug bolts.
7. The Contractor may provide optional leveling plates to achieve fit-up and level contact surfaces for the bearings and shear keys. The Contractor shall erect the E2 cap beam and E2 girders to the elevations and tolerances specified in the plans and special provisions.
8. Leveling plate shall be attached with (illegible) plug welds at 0.5 m Max spacing, 2 and a perimeter PJP weld.
9. All faying surfaces of the girder key plate, the bearing top housing, and the optional leveling plate shall be machined after all welding for flatness and smoothness as specified for the top of the bearing top housing. See "Pier E2 Bearing Details No. 3" sheet.

CONTRACT CHANGE ORDER NO. ____
SHEET ___ OF ___

REQUESTS FOR INFORMATION NOT ADDRESSED IN THIS CCO REMAIN IN FORCE

ALL DIMENSIONS ARE IN MILLIMETERS UNLESS OTHERWISE SHOWN

MARK	DATE	DESCRIPTIONS	BY	CH'D	CCO#
2	07/17/09	E2 CROSS BEAM	MN	NV	71
1	09/26/08	E2 CROSS BEAM	MN	NV	71

REVISIONS

DESIGN	BY M. Nader	CHECKED L. Rus	
DETAILS	BY N. Vo	CHECKED J. Leventini	
QUANTITIES	BY N. Vo	CHECKED J. Leventini	

PREPARED FOR THE STATE OF CALIFORNIA DEPARTMENT OF TRANSPORTATION

R. Manzanarez
PROJECT ENGINEER

BRIDGE NO. 34-0006L/R
KILOMETER POST 13.2/13.9

SAN FRANCISCO OAKLAND BAY BRIDGE
EAST SPAN SEISMIC SAFETY PROJECT
SELF-ANCHORED SUSPENSION BRIDGE
(SUPERSTRUCTURE & TOWER)

PIER E2 BEARING DETAILS NO. 1

R. Valizadeh/V. Toan/Y.L./W.L./F.C.
DESIGN OVERSIGHT
SIGN OFF DATE 07/17/09

Rev. Date: 5-18-98

ORIGINAL SCALE IN MILLIMETERS FOR REDUCED PLANS 0 10 20 30 40 50 60 70 80 90 100

CU 04
EA 0120F1

DISREGARD PRINTS BEARING EARLIER REVISION DATES

REVISION DATES (PRELIMINARY STAGE ONLY)

SHEET 466R2 OF

FILE => I:\bb\04-012001\sds\contract plans and cco\cco\cco#71\4-revision 07-17-09\dgn\dkbrg01.dgn

100 % PS&E

USERNAME => d1shanks DATE PLOTTED => 17 JUL 2009 TIME PLOTTED => 15:08:43

DIST.	COUNTY	ROUTE	KILOMETER POST TOTAL PROJECT	SHEET NO.	TOTAL SHEETS
04	SF	80	13.2/13.9	884R1	1204

REGISTERED ENGINEER - CIVIL

12-6-04

PLANS APPROVAL DATE

The State of California or its officers or agents shall not be responsible for the accuracy or completeness of electronic copies of this plan sheet.

REGISTERED PROFESSIONAL ENGINEER Marwan N. Nader No. C 054426 Exp. 12/31/09 CIVIL STATE OF CALIFORNIA

T.Y. LIN / MOFFATT & NICHOL
825 BATTERY STREET
SAN FRANCISCO, CA 94111

Caltrans now has a web site! To get to the web site, go to: http://www.dot.ca.gov

LEGEND:

Indicates zone with Level I testing requirements

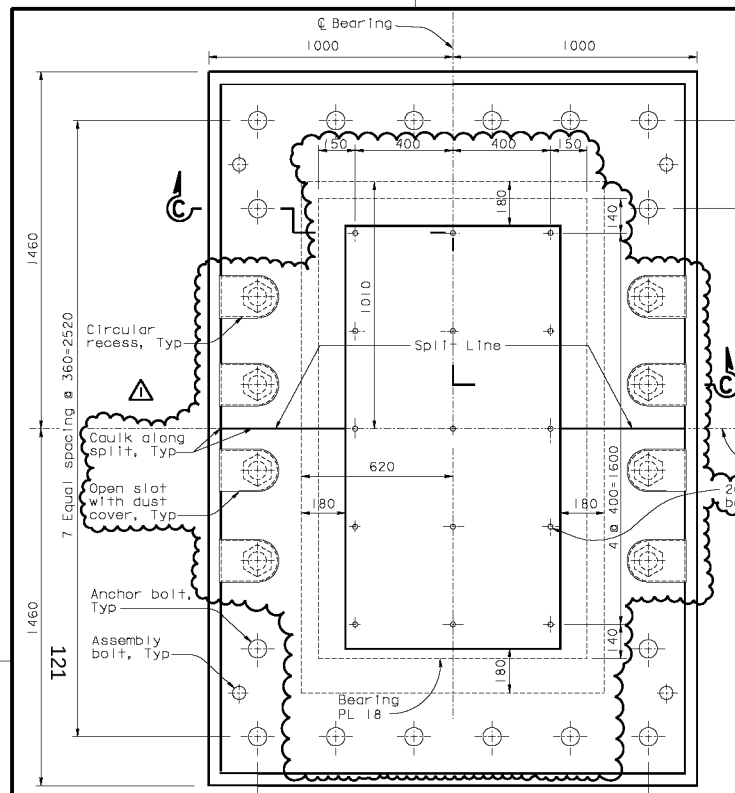

BEARING HOLD DOWN ASSEMBLY PLAN

1:10

(Looking down)

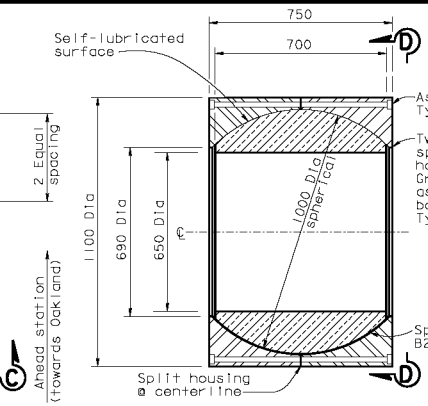

SPHERICAL BUSHING ASSEMBLY DETAIL

1:10

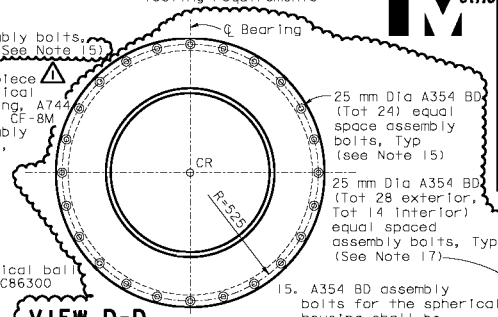

VIEW D-D

1:10

15. A354 BD assembly bolts for the spherical housing shall be stressed to 0.7 Fy.

16. For Detail A and A', see "Pier E2 Bearing Details No.2A" sheet.

17. A354 BD assembly bolts for the retaining ring plate shall be installed snug-tight plus ¼ turn.

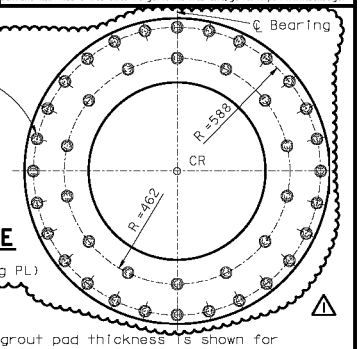

VIEW E-E

1:10

(Retaining Ring PL)

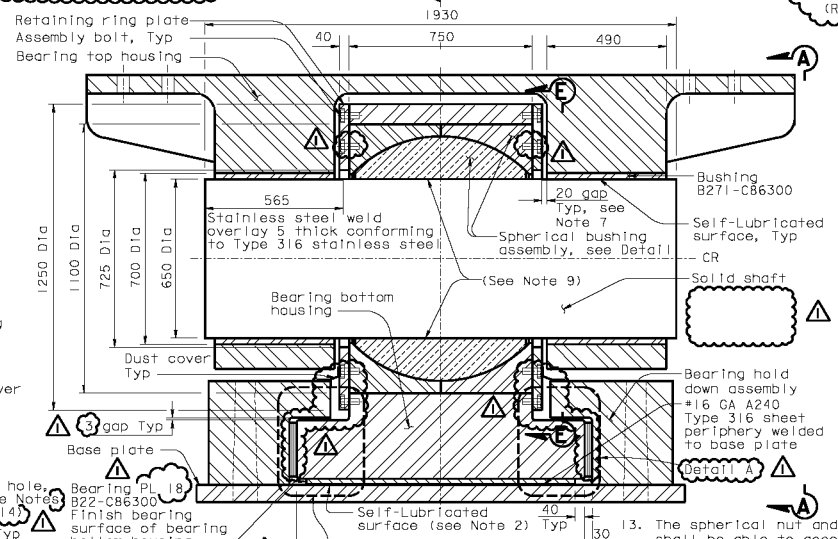

SECTION B-B

1:10

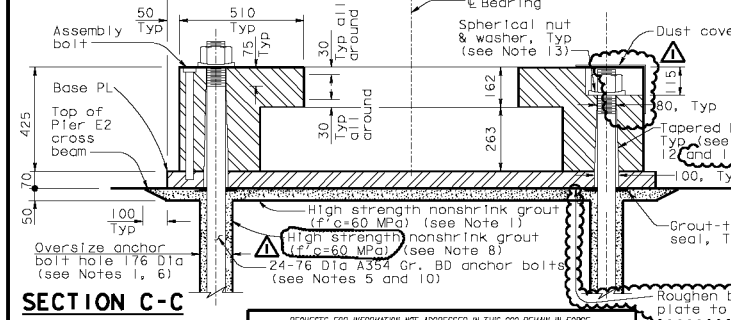

SECTION C-C

1:10

NOTES:

1. The grout pad thickness is shown for information only. The Contractor shall verify in the field the grout pad thickness required to align the center of rotation of the shear key and bearings at 0.750 m from the bottom surface of the box girder.
2. The lubricant shall be Self-lubricated.
3. Bearing plate shall be fastened to bottom of bottom housing using A240 Type 316 counter sunk bolts.
4. All assembly bolts shall be A240 Type 316 unless noted otherwise.
5. The anchor bolt shall be pretensioned to 70% of ultimate tensile strength. Wherever there is no access from the top, anchor bolt shall be prestressed from the bottom.
6. The oversize anchor bolt holes are provided to accommodate construction tolerances.
7. 20 mm gap ±2 mm shall be maintained on both sides during installation.
8. For additional prestressing details, see "Prestressing Notes" sheet.
9. Solid shaft in bushing is press fit.
10. The prestressed anchor bolts shall be wrapped in a PT supplier recommended debonding tape, subject to the review and approval of the Engineer.
11. Grout-tight neoprene seal shown is schematic and is for information only. The seal shall prevent any high strength nonshrink grout from seeping inside the anchor bolt tapered holes during grouting of the base plate. This is necessary for proper stressing of the anchor bolts. The Contractor may propose an alternate detail to suit his erection means and methods, subject to review and approval of the Engineer.
12. For tapered hole details, see "Pier E2 Shear Key Details No. 1" sheet.
13. The spherical nut and washer shall be able to accomodate a maximum rotation of 3 degrees in any direction.
14. At the Contractor's option, the tapered anchor hole may increase to 200 in lieu of the 100 shown on the plans.

REQUESTS FOR INFORMATION NOT ADDRESSED IN THIS CCO REMAIN IN FORCE

ALL DIMENSIONS ARE IN MILLIMETERS UNLESS OTHERWISE SHOWN

MARK	DATE	DESCRIPTIONS	BY	CH'D	CCO#
1	09/26/08	E2 CROSS BEAM	MN	NV	71

REVISIONS

CONTRACT CHANGE ORDER NO. ____
SHEET ___ OF ___

R. Vallizadeh/V. Tran/Y.L./W.L./F.C.
DESIGN OVERSIGHT
Reza Vallizadeh / Vong Tran / Y. Liu
SIGN OFF DATE 09/28/08

Rev. Date: 5-18-98

DESIGN	BY M. Nader	CHECKED L. Rus	
DETAILS	BY N. Vo	CHECKED J. Leventini	
QUANTITIES	BY N. Vo	CHECKED J. Leventini	

PREPARED FOR THE STATE OF CALIFORNIA DEPARTMENT OF TRANSPORTATION

R. Manzanarez
PROJECT ENGINEER

BRIDGE NO. 34-0006L/R
KILOMETER POST 13.2/13.9

CU 04
EA 0120F1

DISREGARD PRINTS BEARING EARLIER REVISION DATES

REVISION DATES (PRELIMINARY STAGE ONLY)

SAN FRANCISCO OAKLAND BAY BRIDGE
EAST SPAN SEISMIC SAFETY PROJECT

SELF-ANCHORED SUSPENSION BRIDGE (SUPERSTRUCTURE & TOWER)

PIER E2 BEARING DETAILS NO. 2

SHEET 467R1 OF

ORIGINAL SCALE IN MILLIMETERS FOR REDUCED PLANS 0 10 20 30 40 50 60 70 80 90 100

FILE => I:\bb\04-012001\sds\contract plans and cco\cco\in progress\cco#71\original 09-26-08\dgn\akbrg02.dgn

USERNAME => prtan DATE PLOTTED => 08 OCT 2008 TIME PLOTTED => 15:36:24

100% PS&E

DIST.	COUNTY	ROUTE	KILOMETER POST TOTAL PROJECT	SHEET NO.	TOTAL SHEETS
04	SF	80	13.2/13.9	884S1	1204

REGISTERED ENGINEER - CIVIL

09-26-08

PLANS APPROVAL DATE

REGISTERED PROFESSIONAL ENGINEER Marwan N. Nader No. C 054426 Exp. 12/31/09 CIVIL STATE OF CALIFORNIA

The State of California or its officers or agents shall not be responsible for the accuracy or completeness of electronic copies of this plan sheet.

T.Y. LIN / MOFFATT & NICHOL
825 BATTERY STREET
SAN FRANCISCO, CA 94111

Caltrans now has a web site! To get to the web site, go to: http://www.dot.ca.gov

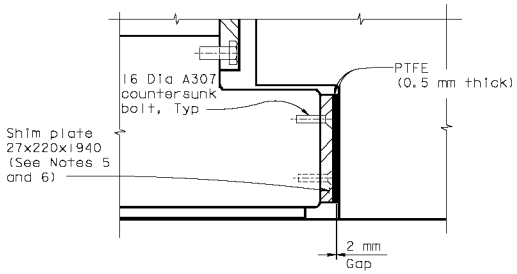

DETAIL A
(Detail A' similar)
1:5

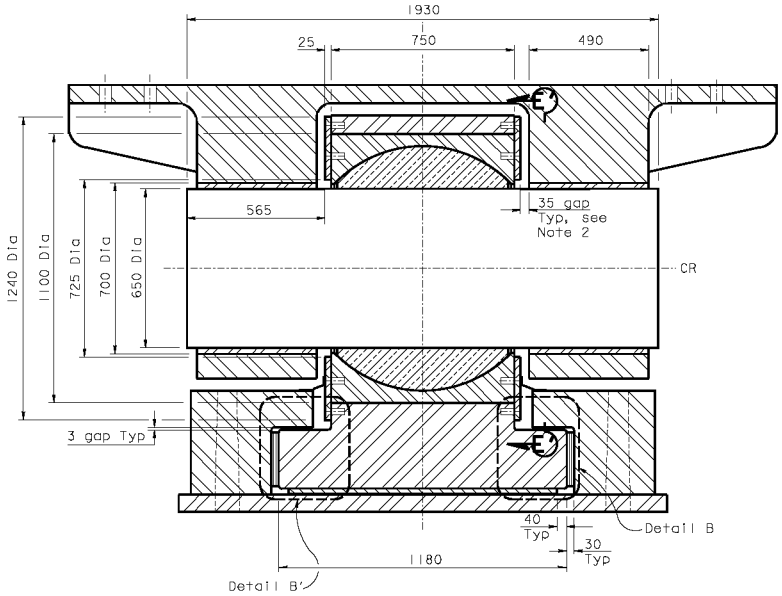

SECTION B-B
1:10

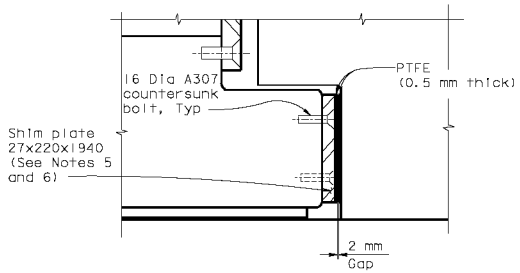

DETAIL B
(Detail B' similar)
1:5

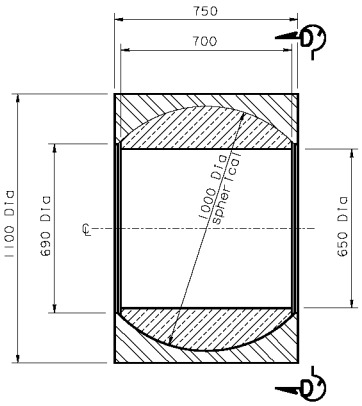

SPHERICAL BUSHING ASSEMBLY DETAIL
1:10

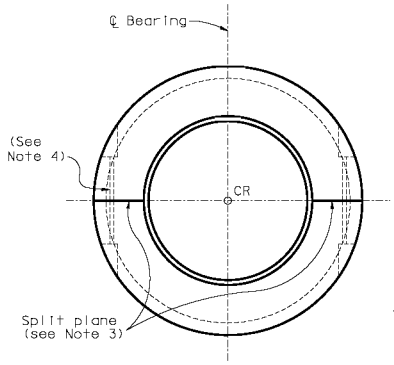

VIEW D'-D'
1:10

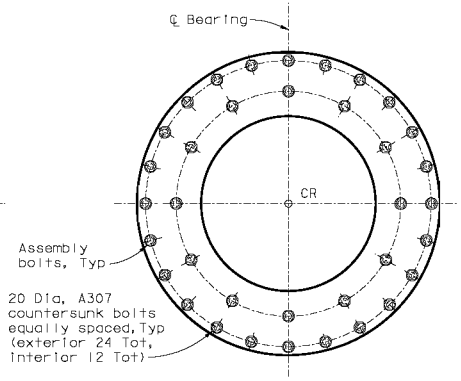

VIEW E'-E'
1:10
(Retaining Ring PL)

ALTERNATE BEARING DETAILS (See Note 1)
1:10

REQUESTS FOR INFORMATION NOT ADDRESSED IN THIS CCO REMAIN IN FORCE				
0	09/26/08	E2 CROSS BEAM	WN	NV	71
MARK	DATE	DESCRIPTIONS	BY	CH'D	CCO#
REVISIONS					

CONTRACT CHANGE ORDER NO. ____
SHEET ___ OF ___

NOTES:

1. For details not shown, see "Pier E2 Bearing Details No. 2" sheet.
2. 35 mm gap ±2 mm shall be maintained on both sides during installation.
3. The split plane shall be parallel to the base plate in the final erected position.
4. Assembly bolts and recesses are shown schematically. Design and details of assembly bolts for spherical housing shall be per bearing manufacturer.
5. Shim plate and PTFE film shall be provided along the 2 sides of the bearing housing in the longitudinal direction of the bridge.
6. Shim plate details may vary with field conditions subject to review and approval of the Engineer.

ALL DIMENSIONS ARE IN MILLIMETERS UNLESS OTHERWISE SHOWN

SAN FRANCISCO OAKLAND BAY BRIDGE
EAST SPAN SEISMIC SAFETY PROJECT
SELF-ANCHORED SUSPENSION BRIDGE
(SUPERSTRUCTURE & TOWER)

PIER E2 BEARING DETAILS NO. 2A

R. Vallizadeh/V. Toan/Y.L./W.L./F.C.
DESIGN OVERSIGHT
SIGN OFF DATE 09/28/08

	BY	CHECKED
DESIGN	M. Nader	N. Vo
DETAILS	M. Nader	N. Vo
QUANTITIES	M. Nader	N. Vo

PREPARED FOR THE STATE OF CALIFORNIA DEPARTMENT OF TRANSPORTATION

R. Manzanarez
PROJECT ENGINEER

BRIDGE NO. 34-0006L/R
KILOMETER POST 13.2/13.9

CU 04
EA 0120F1

DISREGARD PRINTS BEARING EARLIER REVISION DATES 09/27/01

REVISION DATES (PRELIMINARY STAGE ONLY)

SHEET 467S1 OF

Rev. Date: 5-18-98

ORIGINAL SCALE IN MILLIMETERS FOR REDUCED PLANS 0 10 20 30 40 50 60 70 80 90 100

FILE => I:\bb\04-012001\sds\contract plans and cco\cco\in progress\cco#71\original 09-26-08\dgn\dkbrg02a.dgn

USERNAME => pthom DATE PLOTTED => 08 OCT 2008 TIME PLOTTED => 15:37:13

100 % PS&E

Caltrans now has a web site! To get to the web site, go to: http://www.dot.ca.gov

Caltrans Metric

DIST.	COUNTY	ROUTE	KILOMETER POST TOTAL PROJECT	SHEET NO.	TOTAL SHEETS
04	SF	80	13.2/13.9	885R1	1204

REGISTERED ENGINEER - CIVIL

12-6-04

PLANS APPROVAL DATE

The State of California or its officers or agents shall not be responsible for the accuracy or completeness of electronic copies of this plan sheet.

REGISTERED PROFESSIONAL ENGINEER Marwan N. Nader No. C 054426 Exp. 12/31/09 CIVIL STATE OF CALIFORNIA

T.Y. LIN / MOFFATT & NICHOL
825 BATTERY STREET
SAN FRANCISCO, CA 94111

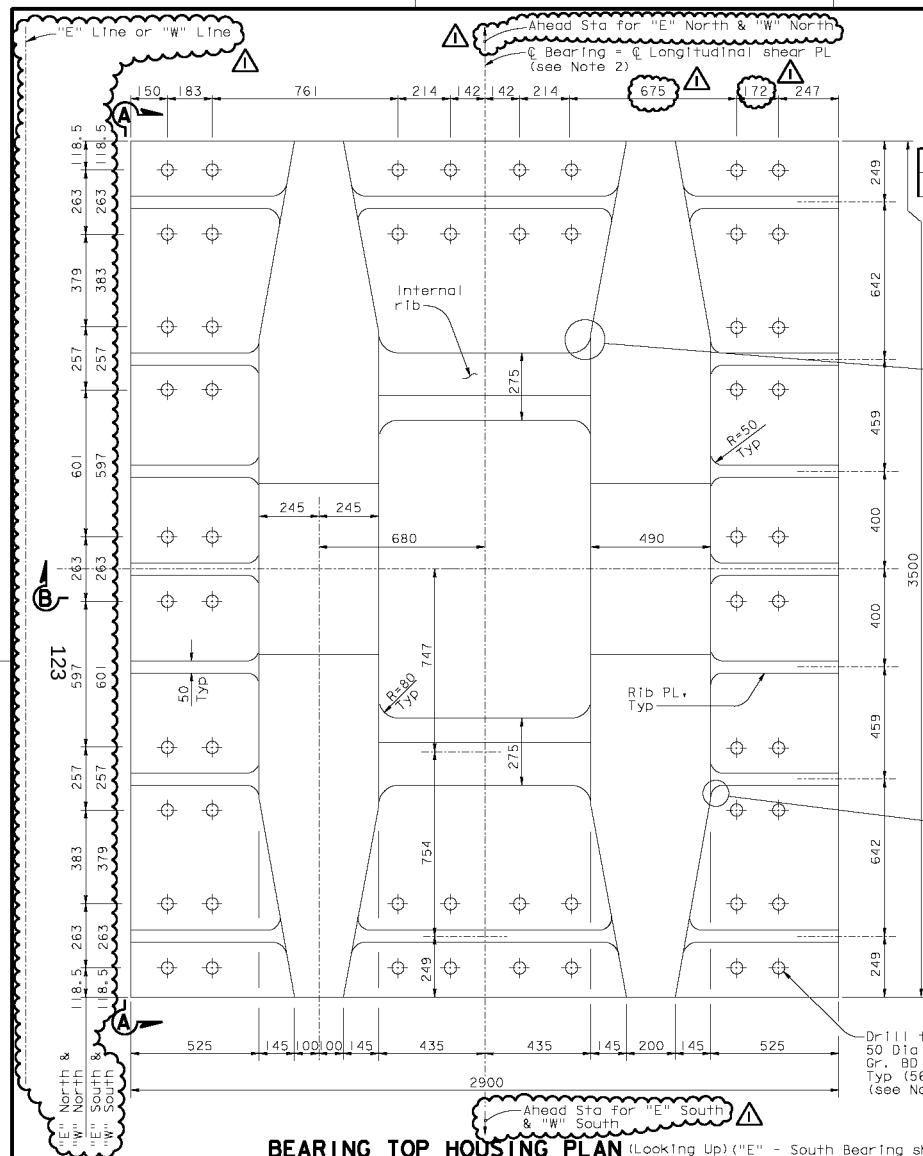

BEARING TOP HOUSING PLAN

(Looking Up) ("E" - South Bearing shown. "W" - South similar. See Note 3 and 4)

1:10

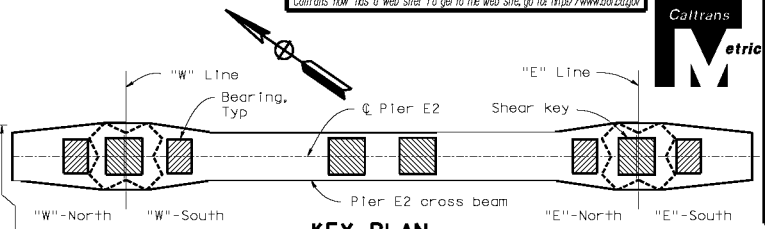

KEY PLAN

1:200

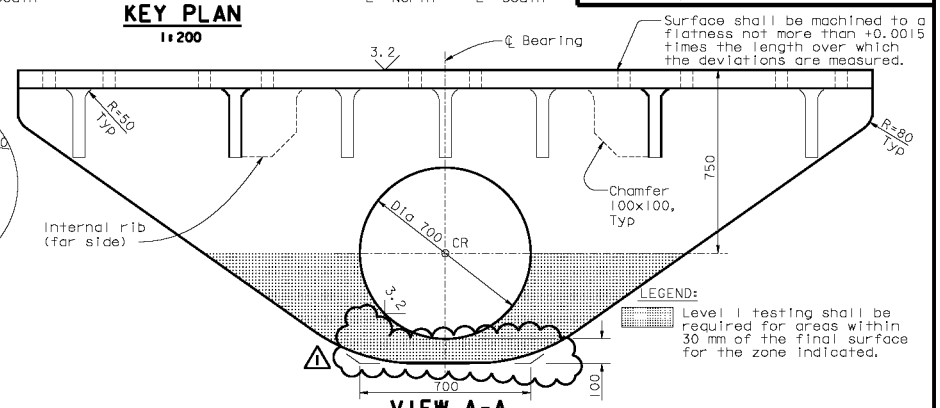

LEGEND:

Level I testing shall be required for areas within 30 mm of the final surface for the zone indicated.

VIEW A-A

1:10

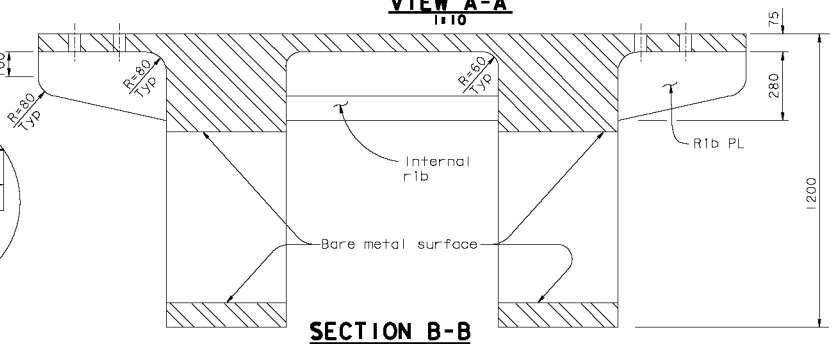

SECTION B-B

1:10

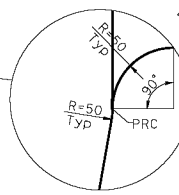

NOTES:

1. Solid shaft in bushings is press fit.
2. For longitudinal shear plate location on box girder, see "Girder At East Transition No.1" sheet.
3. "E"-South bearing and "W"-South bearing are similar. "E"-North bearing and "W"-North bearing are similar.
4. Bolt hole location shall be cross checked with the box girder stiffener layout before drilling holes. Bolt edge distance and clearance for tightening shall be verified and submitted for review and approval by the Engineer. A template shall be used to drill bolt holes in bearing top housing and girder key plate to ensure hole matching.
5. The anchor bolt shall be pretensioned to 70% of ultimate tensile strength.
6. At the Contractor's option, oversized holes and appropriate washer plates may be used in the bearing top housing.

REQUESTS FOR INFORMATION NOT ADDRESSED IN THIS CCO REMAIN IN FORCE

ALL DIMENSIONS ARE IN MILLIMETERS UNLESS OTHERWISE SHOWN

MARK	DATE	DESCRIPTIONS	BY	CH'D	CCO#
1	09/26/08	E2 CROSS BEAM	MN	NV	71

REVISIONS

CONTRACT CHANGE ORDER NO. ____
SHEET ___ OF ___

R. Vallizadeh/V. Toan/Y.L./W.L./F.C.
DESIGN OVERSIGHT
Reza Vallizadeh / Vong Toan / Y. Liu
SIGN OFF DATE 09/28/08

Rev. Date: 5-18-98

DESIGN	BY M. Nader	CHECKED L. Rus	
DETAILS	BY N. Vo	CHECKED J. Leventini	
QUANTITIES	BY N. Vo	CHECKED J. Leventini	

PREPARED FOR THE STATE OF CALIFORNIA DEPARTMENT OF TRANSPORTATION

R. Manzanarez
PROJECT ENGINEER

BRIDGE NO. 34-0006L/R
KILOMETER POST 13.2/13.9

CU 04
EA 0120F1

DISREGARD PRINTS BEARING EARLIER REVISION DATES

REVISION DATES (PRELIMINARY STAGE ONLY)

SAN FRANCISCO OAKLAND BAY BRIDGE
EAST SPAN SEISMIC SAFETY PROJECT

SELF-ANCHORED SUSPENSION BRIDGE (SUPERSTRUCTURE & TOWER)

PIER E2 BEARING DETAILS NO. 3

SHEET 468R1 OF

ORIGINAL SCALE IN MILLIMETERS FOR REDUCED PLANS 0 10 20 30 40 50 60 70 80 90 100

FILE => I:\bb\04-012001\sas\contract plans and cco\cco\in progress\cco#71\original 09-26-08\dgn\dkbrg03.dgn

USERNAME -> pthan DATE PLOTTED -> 08 OCT 2008 TIME PLOTTED -> 15:38:09

100 % PS&E

DIST.	COUNTY	ROUTE	KILOMETER POST TOTAL PROJECT	SHEET NO.	TOTAL SHEETS
04	SF	80	13.2/13.9	886	1204

REGISTERED ENGINEER - CIVIL

12-6-04

PLANS APPROVAL DATE

The State of California or its officers or agents shall not be responsible for the accuracy or completeness of electronic copies of this plan sheet.

REGISTERED PROFESSIONAL ENGINEER Marwan N. Nader No. C 054426 Exp. 12/31/05 CIVIL STATE OF CALIFORNIA

T.Y. LIN / MOFFATT & NICHOL
825 BATTERY STREET
SAN FRANCISCO, CA 94111

Caltrans now has a web site! To get to the web site, go to: http://www.dot.ca.gov

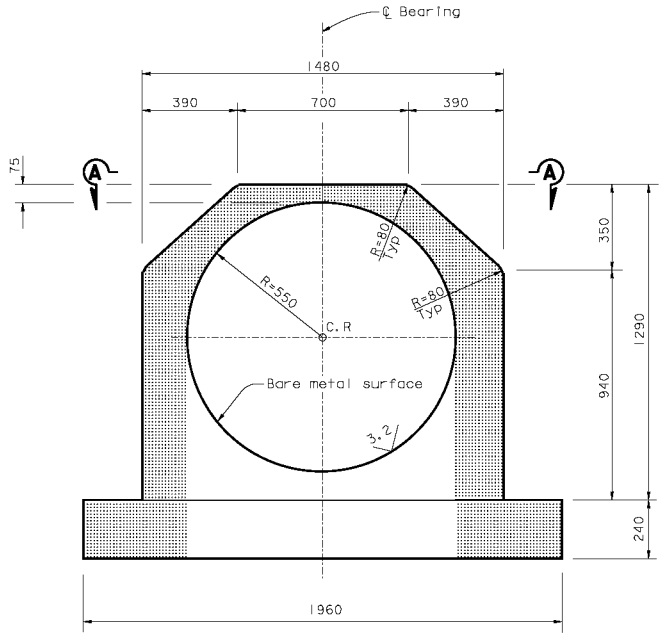

BEARING BOTTOM HOUSING (Looking North)
1:10

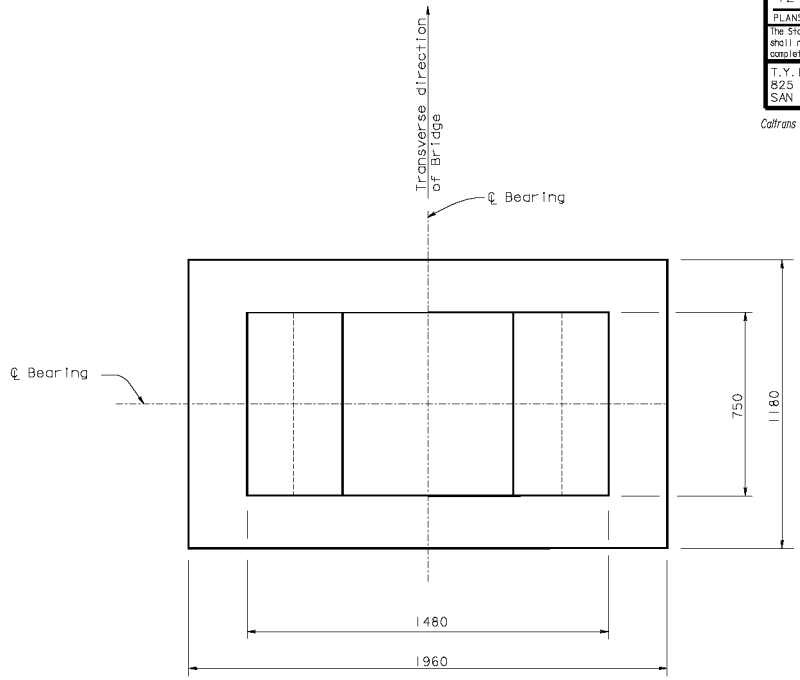

VIEW A-A
1:10

LEGEND:

Indicates zone with Level I testing requirements

ALL DIMENSIONS ARE IN MILLIMETERS UNLESS OTHERWISE SHOWN

SAN FRANCISCO OAKLAND BAY BRIDGE
EAST SPAN SEISMIC SAFETY PROJECT

SELF-ANCHORED SUSPENSION BRIDGE
(SUPERSTRUCTURE & TOWER)

PIER E2 BEARING DETAILS NO. 4

R. Valizadeh/V. Toan/Y.L./W.L./F.C.
DESIGN OVERSIGHT
SIGN OFF DATE 12/18/02

DESIGN	BY M. Nader	CHECKED L. Rus	
DETAILS	BY N. Vo	CHECKED J. Leventini	
QUANTITIES	BY N. Vo	CHECKED J. Leventini	

PREPARED FOR THE STATE OF CALIFORNIA DEPARTMENT OF TRANSPORTATION

R. Manzanarez
PROJECT ENGINEER

BRIDGE NO. 34-0006L/R
KILOMETER POST 13.2/13.9

CU 04
EA 0120F1

DISREGARD PRINTS BEARING EARLIER REVISION DATES

REVISION DATES (PRELIMINARY STAGE ONLY) SIGNED 12/19/02

SHEET 469 OF

Rev. Date: 5-18-98

ORIGINAL SCALE IN MILLIMETERS FOR REDUCED PLANS 0 10 20 30 40 50 60 70 80 90 100

FILE => I:\bb\04-012001\sas\dump\drawings from ct plus cco\drawings from ct\akbrg04.dgn

USERNAME -> klo DATE PLOTTED -> 20 MAR 2007 TIME PLOTTED -> 15:29:40

100 % PS&E

DIST.	COUNTY	ROUTE	KILOMETER POST TOTAL PROJECT	SHEET NO.	TOTAL SHEETS
04	SF	80	13.2/13.9	887R2	1204

REGISTERED ENGINEER - CIVIL

12-6-04

PLANS APPROVAL DATE

REGISTERED PROFESSIONAL ENGINEER Marwan N. Nader No. C 054426 Exp. 12/31/09 CIVIL STATE OF CALIFORNIA

The State of California or its officers or agents shall not be responsible for the accuracy or completeness of electronic copies of this plan sheet.

T.Y. LIN / MOFFATT & NICHOL
825 BATTERY STREET
SAN FRANCISCO, CA 94111

Caltrans now has a web site! To get to the web site, go to: http://www.dot.ca.gov

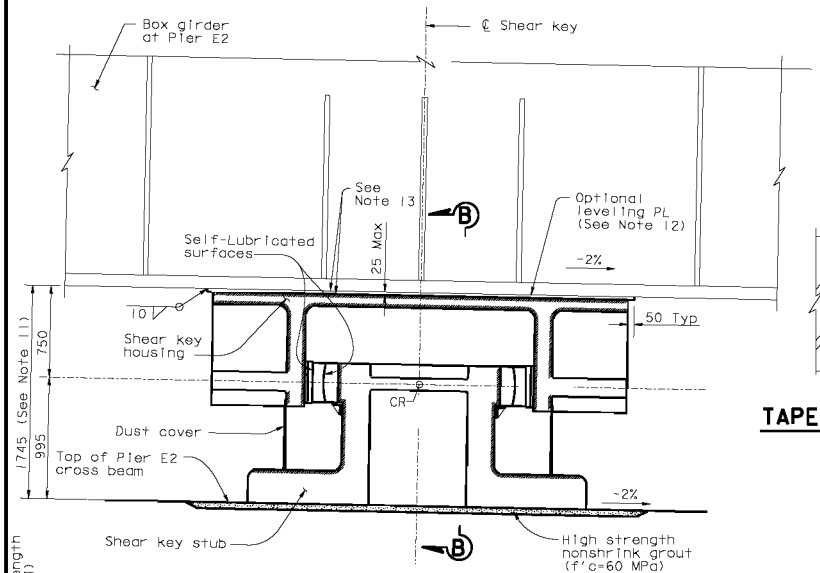

DETAIL B - SHEAR KEY ASSEMBLY

1:20

(Bolts not shown for clarity)
(Looking East)

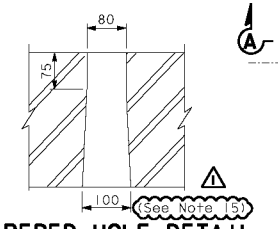

TAPERED HOLE DETAIL

1:5

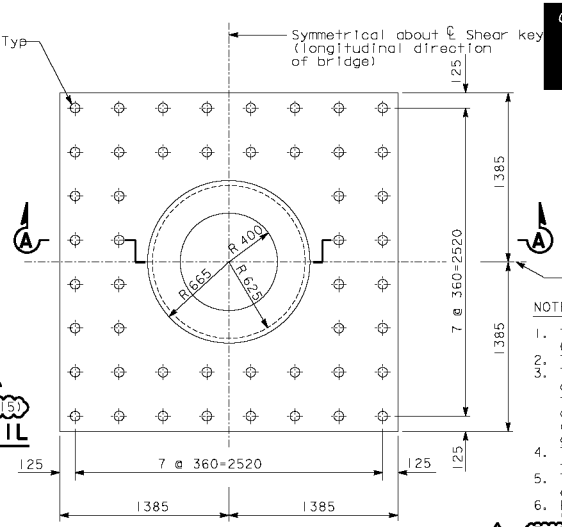

PLAN - SHEAR KEY STUB

1:20

(Anchor bolts not shown for clarity)

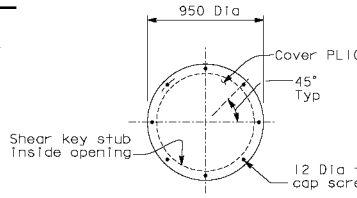

SECTION C-C

1:20

LEGEND:

CR — Center of Rotation

Indicates zone with Level I testing requirements

NOTES:

1. The shear key stub shall be Structural Casting Grade 345.
2. The lubricant shall be self-lubricated.
3. The grout pad thickness is shown for information only. The Contractor shall verify in the field the grout pad thickness required to align the center of rotation of the shear key and bearings at 0.750 m from the bottom surface of the box girder.
4. The anchor bolts shall be pretensioned by jacking to 70% ultimate tensile strength.
5. The oversize anchor bolt holes are provided to accommodate construction tolerances.
6. For additional prestressing details, see "Prestressing Notes" sheet.
7. The prestressed anchor bolts shall be wrapped in a PT supplier recommended debonding tape, subject to the review and approval of the Engineer.
8. The spherical nut and washer shall be able to accomodate a maximum rotation of 3 degrees in any direction.
9. Grout-tight neoprene seal shown is schematic and is for information only. The seal shall prevent any high strength nonshrink grout from seeping inside the anchor bolt tapered holes during grouting of the shear key stub. This is necessary for proper stressing of the anchor bolts. The Contractor may propose an alternate detail to suit their erection means and methods, subject to review and approval of the Engineer.
10. Bolted connection between shear key housing and box girder is slip-critical connection with class B contact surface.
11. The Contractor may provide optional leveling plates to achieve fit-up and level contact surfaces for the bearings and shear keys. The Contractor shall erect the E2 cap beam and E2 girders to the elevations and tolerances specified in the plans and special provisions.
12. Leveling plate shall be attached with plug welds at 0.5 m Max spacing, and a perimeter fillet weld.
13. All faying surfaces of the girder key plate, the shear key housing, and the optional leveling plate shall be machined after all welding for flatness and smoothness as specified for the top of the shear key housing. See "Pier E2 Shear Key Detail No. 2" sheet.
14. Extension length for anchor bolts at "E" Line and "W" Line shear keys shall be long enough to engage hydraulic lock.
15. At the Contractor's option, the tapered anchor hole may increase to 200 in lieu of the 100 shown on the plans.
16. The top shear key stub shaft section shall be "snug-fit" inside the spherical ring with a diameter gap between ring and stub of 1 mm Max.
17. At the Contractor's option, 10 mm radius may be used to facilitate stressing of anchor bolts.

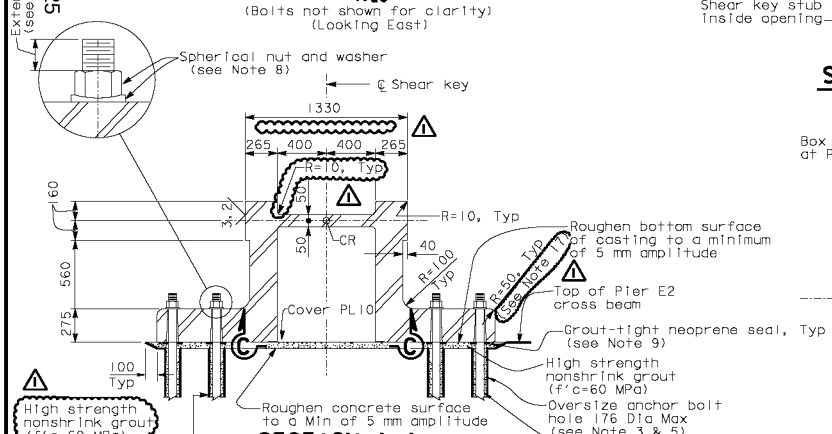

SECTION A-A

1:20

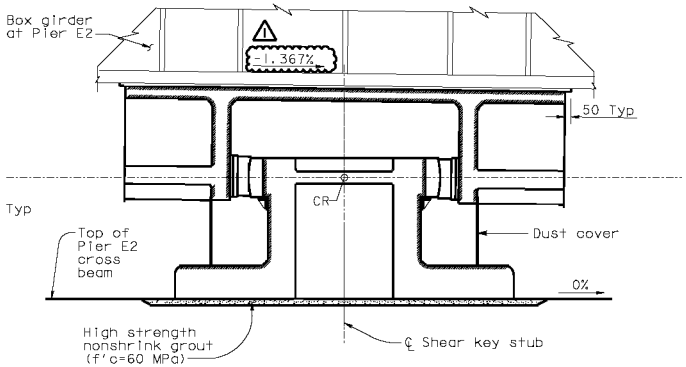

SECTION B-B

1:20

(Bolts not shown for clarity)

ALL DIMENSIONS ARE IN MILLIMETERS UNLESS OTHERWISE SHOWN

CONTRACT CHANGE ORDER NO. ____
SHEET ___ OF ___

REQUESTS FOR INFORMATION NOT ADDRESSED IN THIS CCO REMAIN IN FORCE

MARK	DATE	DESCRIPTIONS	BY	CH'D	CCO#
2	07/17/09	E2 CROSS BEAM	MN	NV	71
1	09/26/08	E2 CROSS BEAM	MN	NV	71

REVISIONS

R. Vallizadeh/V. Toan/Y.L./W.L./F.C.
DESIGN OVERSIGHT
Rey Vallizadeh / Vong Toan / Y. Liu
SIGN OFF DATE 07/17/09

Rev. Date: 5-18-98

	BY	CHECKED
DESIGN	M. Nader	J. Denis
DETAILS	N. Vo	J. Denis
QUANTITIES	N. Vo	J. Denis

PREPARED FOR THE STATE OF CALIFORNIA DEPARTMENT OF TRANSPORTATION

R. Manzanarez
PROJECT ENGINEER

BRIDGE NO. 34-0006L/R
KILOMETER POST 13.2/13.9

CU 04
EA 0120F1

ORIGINAL SCALE IN MILLIMETERS FOR REDUCED PLANS 0 10 20 30 40 50 60 70 80 90 100

DISREGARD PRINTS BEARING EARLIER REVISION DATES

REVISION DATES (PRELIMINARY STAGE ONLY)

SAN FRANCISCO OAKLAND BAY BRIDGE
EAST SPAN SEISMIC SAFETY PROJECT

SELF-ANCHORED SUSPENSION BRIDGE
(SUPERSTRUCTURE & TOWER)

PIER E2 SHEAR KEY DETAILS NO. 1

SHEET 470R2 OF

FILE => I:\bb\04-012001\sas\contract plans and cco\cco\cco#71\4-revision 07-17-09\dgn\aksrd01a.dgn

100 % PS&E

USERNAME -> a1ishanmsk DATE PLOTTED -> 17 JUL 2009 TIME PLOTTED -> 15:1 0:30

DIST.	COUNTY	ROUTE	KILOMETER POST TOTAL PROJECT	SHEET NO.	TOTAL SHEETS
04	SF	80	13.2/13.9	888R1	1204

REGISTERED ENGINEER - CIVIL
12-6-04
PLANS APPROVAL DATE
REGISTERED PROFESSIONAL ENGINEER Marwan N. Nader No. C 054426 Exp. 12/31/09 CIVIL STATE OF CALIFORNIA

The State of California or its officers or agents shall not be responsible for the accuracy or completeness of electronic copies of this plan sheet.

T.Y. LIN / MOFFATT & NICHOL
825 BATTERY STREET
SAN FRANCISCO, CA 94111

Caltrans now has a web site! To get to the web site, go to: http://www.dot.ca.gov

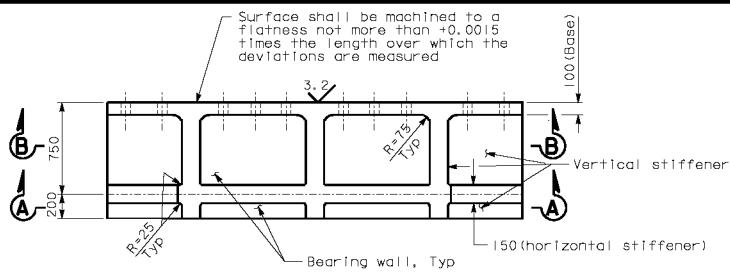

ELEVATION - SHEAR KEY HOUSING
1:20

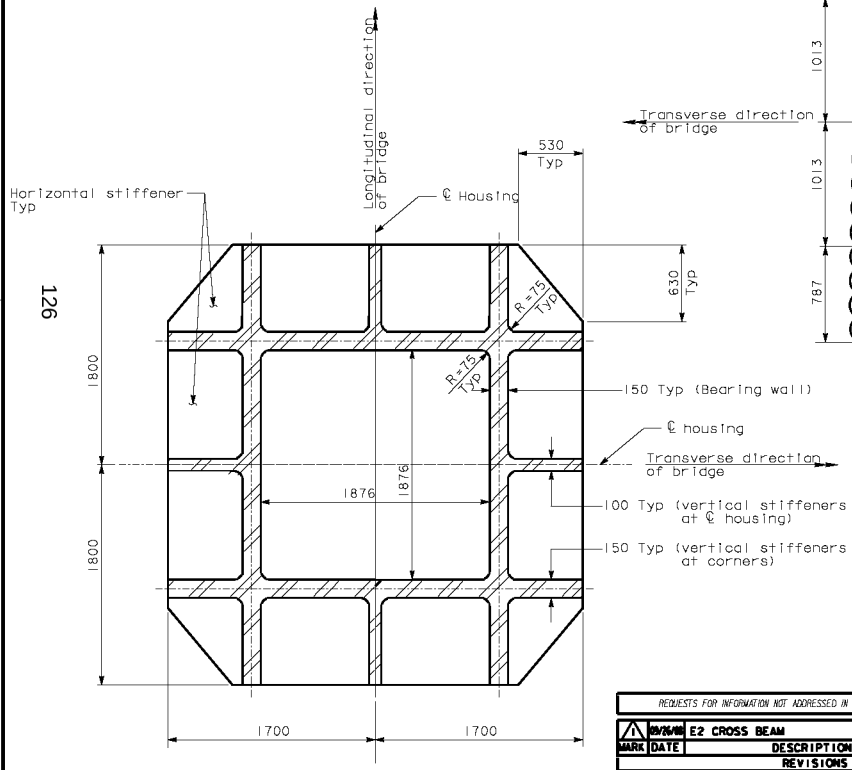

SECTION A-A
1:20

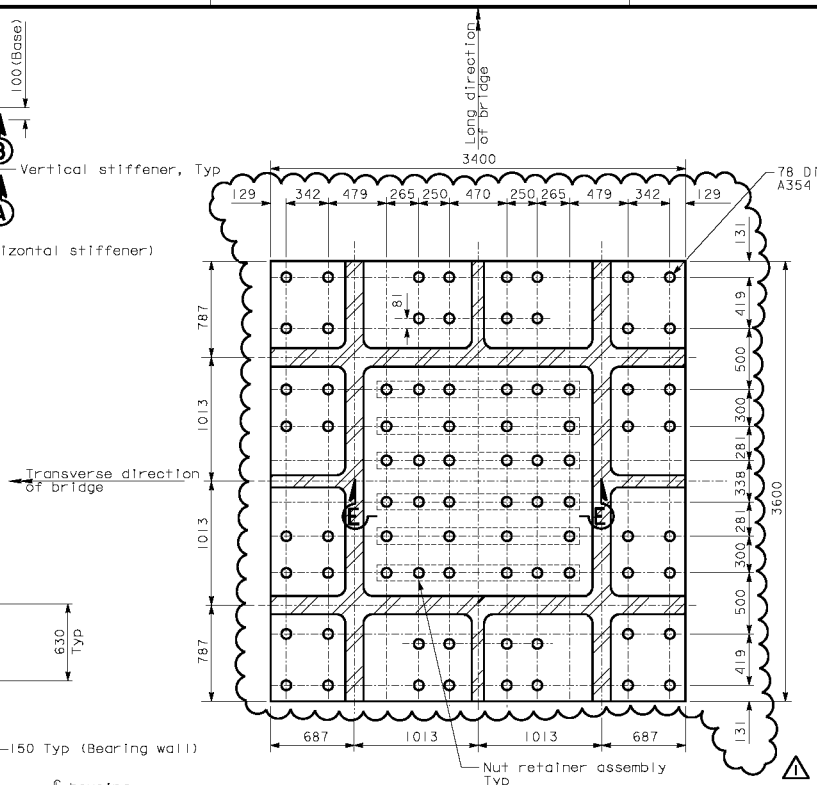

SECTION B-B
(For details not shown see Section A-A)
1:20

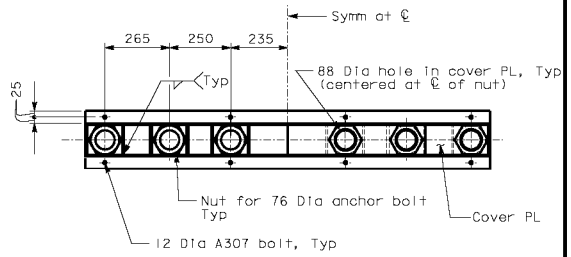

SECTION C-C
1:10

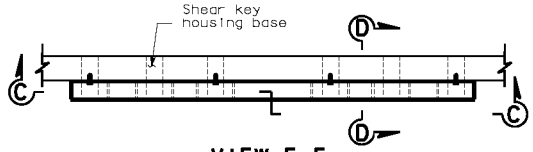

VIEW E-E
NUT RETAINER ASSEMBLY-ELEVATION
1:10
(All plates 8 mm thick)

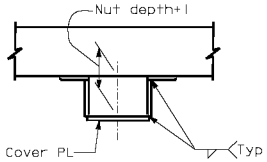

SECTION D-D
1:5

NOTES:

1. The shear key housing shall be Structural Casting Grade 345.
2. The shear key housing bolt layout shall accommodate the girder and crossbeam plate stiffener location. For girder details at Pier E2, see "Girder At Pier E2 details" sheet. For crossbeam details at pier E2, see "Crossbeam at Pier E2" sheets.
3. Bolt hole location shall be cross checked with the box girder and crossbeam stiffener layout before drilling holes. Bolt edge distance and clearance for tightening shall be verified and submitted for review and approval by the Engineer. A template shall be used to drill bolt holes in shear key housing and girder key plate to ensure hole matching.
4. The anchor bolts shall be pretensioned to 70% of ultimate tensile strength.
5. Nut retainer assemblies including nuts shall be installed to shear key housing prior to assembling housing to bushing and stub.
6. Machined washers at bolt heads shall be used if necessary at stiffener fillets.

REQUESTS FOR INFORMATION NOT ADDRESSED IN THIS CCO REMAIN IN FORCE

MARK	DATE	DESCRIPTIONS	BY	CH'D	CCO#
1	09/26/08	E2 CROSS BEAM	MN	NV	71

REVISIONS

CONTRACT CHANGE ORDER NO. ____
SHEET ___ OF ___

ALL DIMENSIONS ARE IN MILLIMETERS UNLESS OTHERWISE SHOWN

SAN FRANCISCO OAKLAND BAY BRIDGE
EAST SPAN SEISMIC SAFETY PROJECT
SELF-ANCHORED SUSPENSION BRIDGE
(SUPERSTRUCTURE & TOWER)
PIER E2 SHEAR KEY DETAILS NO. 2

R. Valizadeh/V. Toan/Y.L./W.L./F.C.
DESIGN OVERSIGHT
SIGN OFF DATE 08/28/08

	BY	CHECKED
DESIGN	M. Nader	J. Denis
DETAILS	N. Vo	J. Denis
QUANTITIES	N. Vo	J. Denis

PREPARED FOR THE STATE OF CALIFORNIA DEPARTMENT OF TRANSPORTATION

R. Manzanarez
PROJECT ENGINEER

BRIDGE NO. 34-0006L/R
KILOMETER POST 13.2/13.9

CU 04
EA 0120F1

Rev. Date: 5-18-98

ORIGINAL SCALE IN MILLIMETERS FOR REDUCED PLANS 0 10 20 30 40 50 60 70 80 90 100

DISREGARD PRINTS BEARING EARLIER REVISION DATES

REVISION DATES (PRELIMINARY STAGE ONLY)
signed signed signed signed 11/01/03

SHEET 471R1 OF

FILE => I:\bb\04-012001\sds\contract plans and cco\cco\in progress\cco#71\original 09-26-08\dgn\aksrd01b.dgn

USERNAME -> pthom DATE PLOTTED -> 08 OCT 2008 TIME PLOTTED -> 15:40:47

100 % PS&E

DIST.	COUNTY	ROUTE	KILOMETER POST TOTAL PROJECT	SHEET NO.	TOTAL SHEETS
04	SF	80	13.2/13.9	888ARI	1204

REGISTERED ENGINEER - CIVIL

12-7-05

PLANS APPROVAL DATE

The State of California or its officers or agents shall not be responsible for the accuracy or completeness of electronic copies of this plan sheet.

REGISTERED PROFESSIONAL ENGINEER Marwan N. Nader No. C 054426 Exp. 12/31/09 CIVIL STATE OF CALIFORNIA

T.Y. LIN / MOFFATT & NICHOL
825 BATTERY STREET
SAN FRANCISCO, CA 94111

Caltrans now has a web site! To get to the web site, go to: http://www.dot.ca.gov

Caltrans Metric

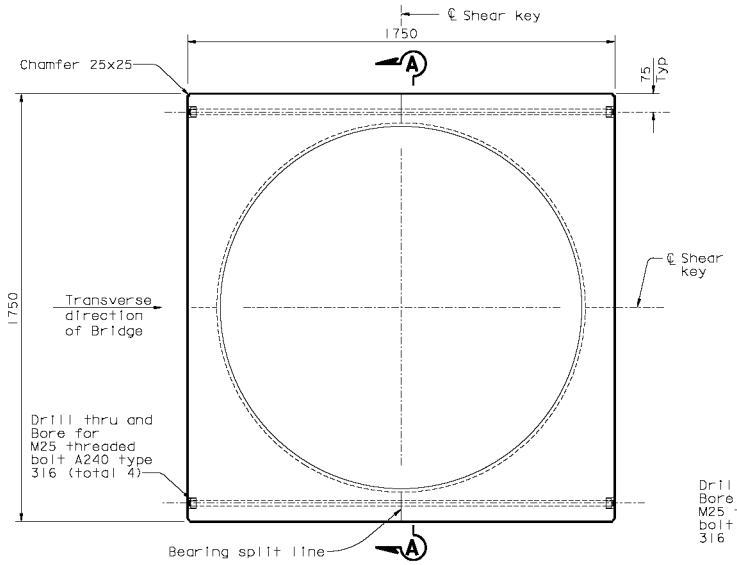

PLAN - SPHERICAL HOUSING
1:10

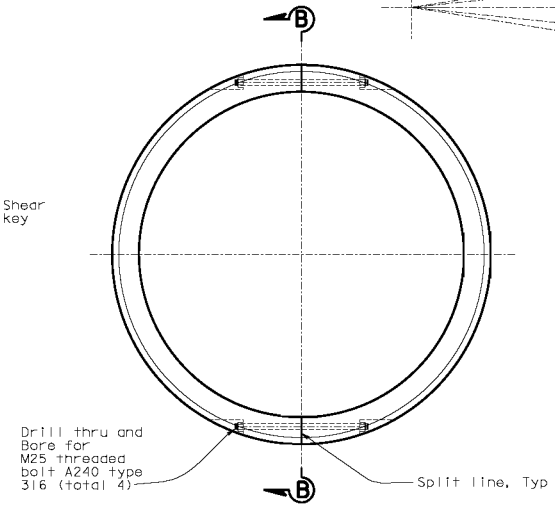

PLAN - SPHERICAL RING
1:10

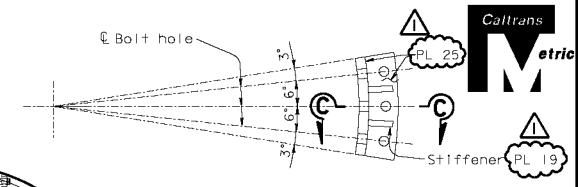

DETAIL A
1:5

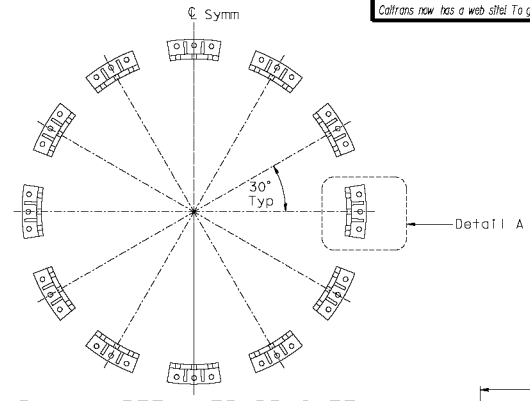

PLAN - RETAINER BRACKET (Looking up)
1:10

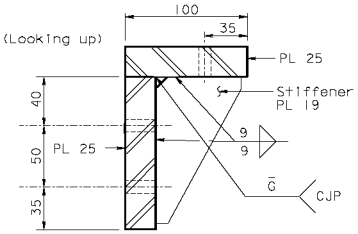

SECTION C-C
1:2

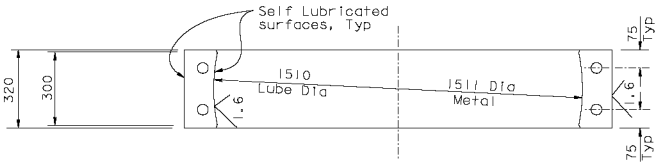

SECTION A-A
1:10

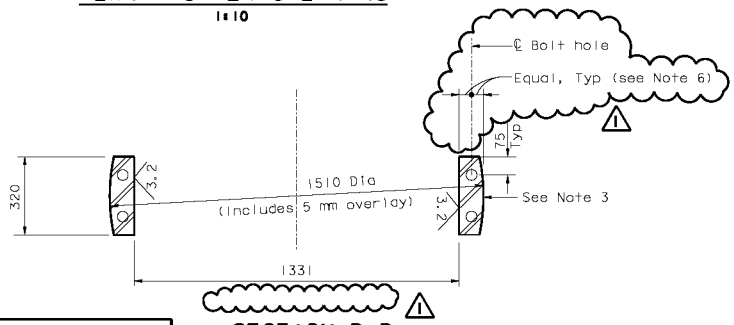

SECTION B-B
1:10

NOTES:

1. The spherical ring shall be Structural Casting Grade 345.
2. The spherical housing shall be high strength manganese bronze centrifugally cast to the requirements of B271-C86300. All assembly bolts shall be stainless steel A240 Type 316.
3. The mating surfaces of the spherical ring shall be 5 mm thick stainless steel weld overlay conforming to the requirements of A240, Type 316.
4. The lubricant shall be self-lubricated.
5. The spherical ring shall be "snug fit" over the shaft section of the shear key stub with a diameter gap of 1 mm Max.
6. At the Contractor's option, bolt hole location may be adjusted to accomodate seating of bolt nut and washer, subject to review and approval of the Engineer.

REQUESTS FOR INFORMATION NOT ADDRESSED IN THIS CCO REMAIN IN FORCE

MARK	DATE	DESCRIPTIONS	BY	CH'D	CCO#
1	09/26/08	E2 CROSS BEAM	MN	NV	71

REVISIONS

CONTRACT CHANGE ORDER NO. ____
SHEET ___ OF ___

ALL DIMENSIONS ARE IN MILLIMETERS UNLESS OTHERWISE SHOWN

SAN FRANCISCO OAKLAND BAY BRIDGE
EAST SPAN SEISMIC SAFETY PROJECT
SELF-ANCHORED SUSPENSION BRIDGE
(SUPERSTRUCTURE & TOWER)

PIER E2 SHEAR KEY DETAILS NO. 3

R. Valizadeh/V. Toan/Y.L./W.L./F.C.
DESIGN OVERSIGHT
Reza Valizadeh / Vong Toan / Y. Liu
SIGN OFF DATE 09/28/08

DESIGN	BY M. Nader	CHECKED J. Denis	
DETAILS	BY N. Vo	CHECKED J. Denis	
QUANTITIES	BY N. Vo	CHECKED J. Denis	

PREPARED FOR THE STATE OF CALIFORNIA DEPARTMENT OF TRANSPORTATION

R. Manzanarez
PROJECT ENGINEER

BRIDGE NO. 34-0006L/R
KILOMETER POST 13.2/13.9

CU 04
EA 0120F1

Rev. Date: 5-18-98

ORIGINAL SCALE IN MILLIMETERS FOR REDUCED PLANS 0 10 20 30 40 50 60 70 80 90 100

DISREGARD PRINTS BEARING EARLIER REVISION DATES 10/07/05

REVISION DATES (PRELIMINARY STAGE ONLY)

SHEET 471ARI OF

FILE => I:\bb\04-012001\sas\contract plans and cco\cco\in progress\cco#71\original 09-26-08\dgn\aksrd01c.dgn

USERNAME -> pthom DATE PLOTTED -> 08 OCT 2008 TIME PLOTTED -> 15:41:35

100 % PS&E

DIST.	COUNTY	ROUTE	KILOMETER POST TOTAL PROJECT	SHEET NO.	TOTAL SHEETS
04	SF	80	13.2/13.9	888BR3	1204

REGISTERED ENGINEER - CIVIL

12-9-05

PLANS APPROVAL DATE

The State of California or its officers or agents shall not be responsible for the accuracy or completeness of electronic copies of this plan sheet.

REGISTERED PROFESSIONAL ENGINEER Marwan N. Nader No. C 054426 Exp. 12/31/11 CIVIL STATE OF CALIFORNIA

T.Y. LIN / MOFFATT & NICHOL
825 BATTERY STREET
SAN FRANCISCO, CA 94111

Caltrans now has a web site! To get to the web site, go to: http://www.dot.ca.gov

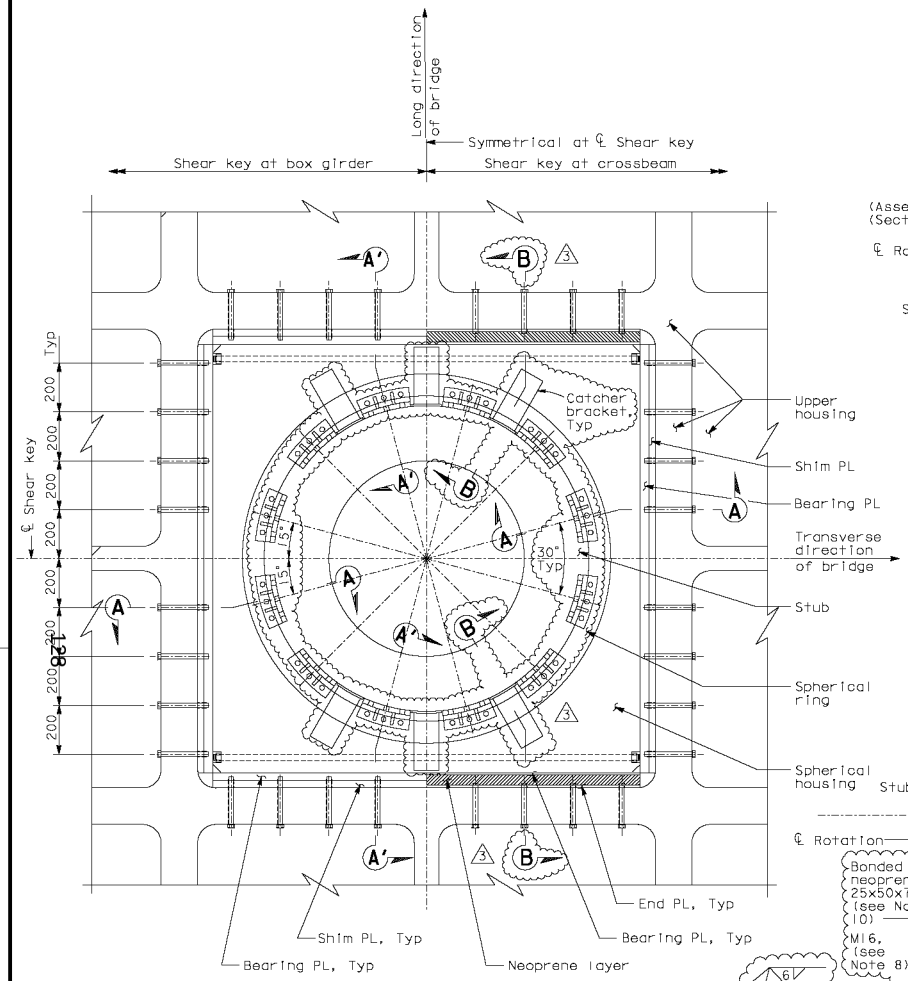

BUSHING CONNECTION DETAIL (Looking up)

1:10

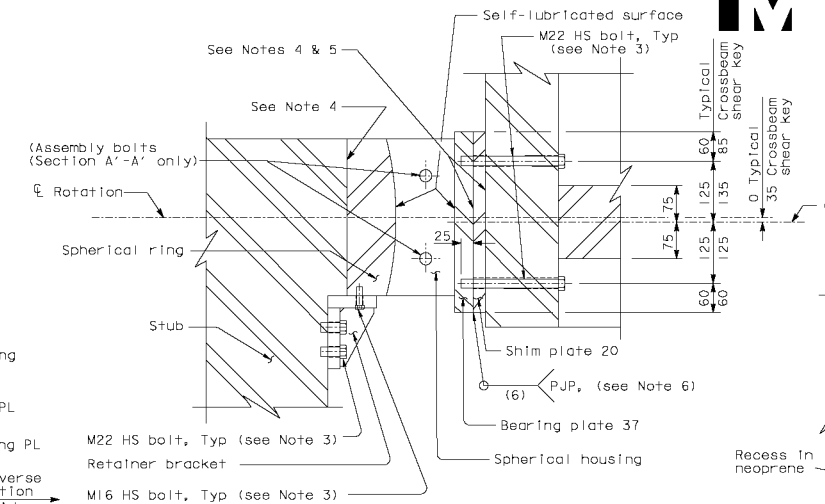

SECTION A-A (Section A'-A' similar)

1:5

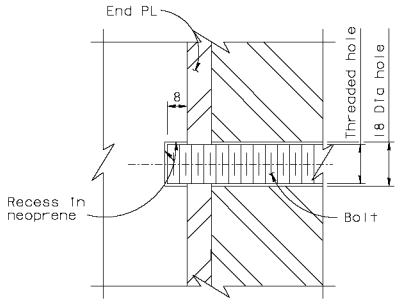

DETAIL A

1:1

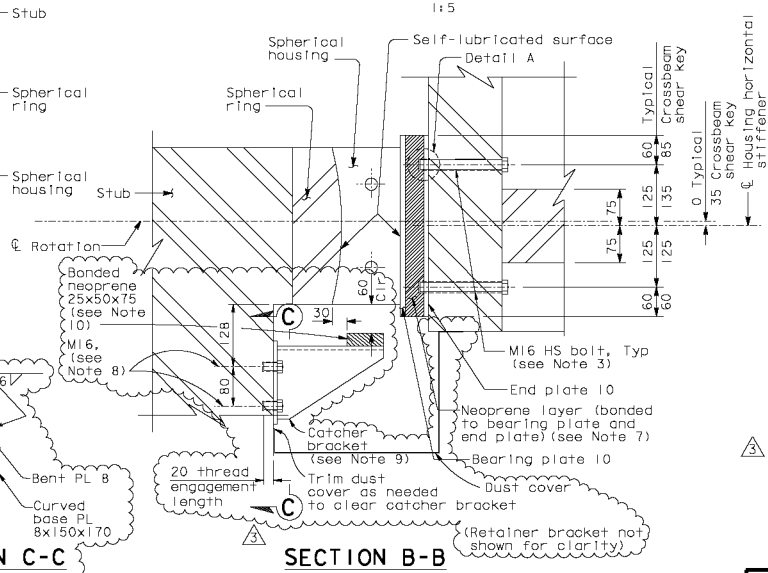

SECTION B-B

1:5

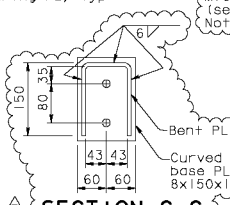

SECTION C-C

1:5

NOTES:

1. The mating surfaces of the spherical ring and bearing plate shall be 5 mm thick stainless steel weld overlay conforming to the requirements of A240, Type 316.
2. The lubricant shall be self-lubricated.
3. High strength bolts shall be installed snug-tight only.
4. Contact steel surfaces shall comply with Class A surface (slip coefficient 0.33).
5. The Contractor shall ensure the flatness requirements are met at the faying surfaces.
6. Welding shall be made after field measurement and actual shim plate thickness has been determined.
7. Field measurement shall be made to determine actual thickness of neoprene layer.
8. Bolts shall be installed snug-tight plus 1/4 turn.
9. Catcher brackets shall be installed for shear keys at crossbeam only.
10. Neoprene pad shall satisfy the requirements of Caltrans Standard Specifications Section 51-1.14.

ALL DIMENSIONS ARE IN MILLIMETERS UNLESS OTHERWISE SHOWN

CONTRACT CHANGE ORDER NO. ____
SHEET ____ OF ____

REQUESTS FOR INFORMATION NOT ADDRESSED IN THIS CCO REMAIN IN FORCE

MARK	DATE	DESCRIPTIONS	BY	CH'D	CCO#
3	01/04/11	E2 SHEAR KEY CATCHER BRACKETS	MN	NV	71S1
2	02/13/09	E2 CROSS BEAM	MN	NV	71
1	09/26/08	E2 CROSS BEAM	MN	NV	71

REVISIONS

R. Valizadeh/V. Toan/Y.L./W.L./F.C.
DESIGN OVERSIGHT
SIGN OFF DATE 01/04/11

	BY	CHECKED
DESIGN	M. Nader	L. Rus
DETAILS	A. Sanjines	J. Leventini
QUANTITIES	A. Sanjines	J. Leventini

PREPARED FOR THE STATE OF CALIFORNIA DEPARTMENT OF TRANSPORTATION

R. Manzanarez
PROJECT ENGINEER

BRIDGE NO. 34-0006L/R
KILOMETER POST 13.2/13.9

SAN FRANCISCO OAKLAND BAY BRIDGE
EAST SPAN SEISMIC SAFETY PROJECT
SELF-ANCHORED SUSPENSION BRIDGE
(SUPERSTRUCTURE & TOWER)

PIER E2 SHEAR KEY DETAILS NO. 4

Rev. Date: 5-18-98

ORIGINAL SCALE IN MILLIMETERS FOR REDUCED PLANS 0 10 20 30 40 50 60 70 80 90 100

CU 04
EA 0120F1

DISREGARD PRINTS BEARING EARLIER REVISION DATES 12/01/05

REVISION DATES (PRELIMINARY STAGE ONLY)

SHEET 471 OF BR3

FILE => I:\bb\04-012001\sas\contract plans and cco\cco\cco#71s1\3-update 01-04-11\dgn\cksrd01d.dgn

100 % PS&E

USERNAME => arivera DATE PLOTTED => 04 JAN 2011 TIME PLOTTED => 11:56:14