STATE OF CALIFORNIA
DEPARTMENT OF TRANSPORTATION
DIVISION OF NEW TECHNOLOGY AND RESEARCH
OFFICE OF TRANSPORTATION LABORATORY

THE USE OF VEGETATION TO REDUCE THE TOXICITY OF STORMWATER RUNOFF (INTERIM REPORT)

Study supervised by.....Mas Hatano, P.E.

Principal Investigator.....Bennett John, P.E.

Co-Investigators.....Harold Hunt,
Aso Enviro. Planner
Pete Zaniewski, P.E.
Patti-Jo Umeda

Report Prepared by.....Patti-Jo Umeda

RAYMOND A. FORSYTH, P.E.
Chief, Office of Transportation Laboratory

88-06

ClibPDF - www.fastio.com

010-88

ClibPDF - www.fastio.com

TECHNICAL REPORT STANDARD TITLE PAGE

1. REPORT NO.	2. GOVERNMENT ACCESSION NO.	3. RECIPIENT'S CATALOG NO.
FHWA/CA/TL-88/06		

4. TITLE AND SUBTITLE	5. REPORT DATE
Use of Vegetation to Reduce the Toxicity of Stormwater Runoff	September 1988
	6. PERFORMING ORGANIZATION CODE 54328-637343
7. AUTHOR(S) Patti-Jo Umeda	8. PERFORMING ORGANIZATION REPORT NO.
9. PERFORMING ORGANIZATION NAME AND ADDRESS Office of Transportation Laboratory California Department of Transportation Sacramento, California 94819	10. WORK UNIT NO 11. CONTRACT OR GRANT NO. E87TL16
12. SPONSORING AGENCY NAME AND ADDRESS California Department of Transportation Sacramento, California 95807	13. TYPE OF REPORT & PERIOD COVERED Interim 1987-1988 14. SPONSORING AGENCY CODE

15. SUPPLEMENTARY NOTES

This study was conducted in cooperation with the U.S. Department of Transportation, Federal Highway Administration.

16. ABSTRACT

The purpose of the research is to determine if dead or dormant vegetation effectively reduces the toxicity of and removes pollutants from highway stormwater runoff and to determine the amount of metallic pollution discharged from vegetated ditches via the transport of dead vegetation. The research will also determine the type of maintenance practices that are necessary to maintain the pollutant removal capacity of vegetated channels.

This research project will consist of three phases. Each phase will require several tasks to be completed.

The purpose of this report is to present the findings of Phase I. The tasks involved included a literature survey, site selection, and equipment design, fabrication and installation.

Two sites were selected for the research project. The irrigation system was installed, grass seed was sown and runoff samplers were fabricated and placed in the channel.

17. KEY WORDS	18. DISTRIBUTION STATEMENT
Vegetated channel, stormwater runoff, pollutant treatment	

19. SECURITY CLASSIF. (OF THIS REPORT)	20. SECURITY CLASSIF. (OF THIS PAGE)	21. NO. OF PAGES	22. PRICE
Unclassified	Unclassified		

DS-TL-1242 (Rev.6/76)

ClibPDF - www.fastio.com

ClibPDF - www.fastio.com

NOTICE

The contents of this report reflect the views of the Office of Transportation Laboratory which is responsible for the facts and the accuracy of the data presented herein. The contents do not necessarily reflect the official views or policies of the State of California. This report does not constitute a standard, specification, or regulation.

The State of California does not endorse products or manufacturers. Trade or manufacturers' names appear herein only because they are considered essential to the object of this document.

ClibPDF - www.fastio.com

ClibPDF - www.fastio.com

CONVERSION FACTORS

English to Metric System (SI) of Measurement

Quality	English unit	Multiply by	To get metric equivalent
Length	inches (in)or(")	25.40 .02540	millimetres (mm) metres (m)
	feet (ft)or(')	.3048	metres (m)
	miles (mi)	1.609	kilometres (km)
Area	square inches (in^2) square feet (ft^2) acres	6.432×10^{-4} .09290 .4047	square metres (m^2) square metres (m^2) hectares (ha)
Volume	gallons (gal) cubic feet (ft^3) cubic years (yd^3)	3.785 .02832 .7646	litre (l) cubic metres (m^3) cubic metres (m^3)
Volume/Time (Flow)	cubic feet per second (ft^3/s	28.317	litres per second l/s)
	gallons per minute (gal/min)	.06309	litres per second (l/s)
Mass	pounds (lb)	.4536	kilograms (kg)
Velocity	miles per hour (mph) feet per second (fps)	.4470 .3048	metres per second (m/s) metres per second (m/s)
Acceleration	feet per second squared (ft/s^2)	.3048	metres per second squared (m/s^2)
	acceleration due to force of gravity (G) (ft/s^2)	9.807	metres per second squared (m/s^2)
Density	(lb/ft^3)	16.02	kilograms per cubic metre (kg/m^3)
Force	pounds (lbs) (1000 lbs) kips	4.448 4448	newtons (N) newtons (N)
Thermal Energy	British termal unit (BTU)	1055	joules (J)
Mechanical Energy	foot-pounds (ft-lb) foot-kips (ft-k)	1.356 1356	joules (J) joules (J)
Bending Moment or Torque	inch-pounds (in-lbs) foot-pounds (ft-lbs)	.1130 1.356	newton-metres (Nm) newton-metres (Nm)
Pressure	pounds per square inch (psi) pounds per square foot (psf)	6895 47.88	pascals (Pa) pascals (Pa)
Stress Intensity	kips per square inch square root inch (ksi$\sqrt{in}$)	1.0988	mega pascals$\sqrt{metre}$ (MPa$\sqrt{m}$)
	pounds per square inch square root inch (psi$\sqrt{in}$)	1.0988	kilo pascals$\sqrt{metre}$ (KPa$\sqrt{m}$)
Plane Angle	degrees (°)	0.0175	radians (rad)
Temperature	degrees fahrenheit (F)	$\frac{+F - 32}{1.8} = +C$	degrees celsius (°C)

ClibPDF - www.fastio.com

ClibPDF - www.fastio.com

ACKNOWLEDGEMENT

Throughout phase I of this project, many individuals were involved and contributed to the research. The investigators would like to express their appreciation to those individuals.

Special acknowledgement must be given to Pete Zaniewski (Transportation Laboratory, REC Branch) for all the time and effort that he devoted to this project and to John Haynes (Transportation Laboratory, REC Branch) for donating the grass seeds, fertilizer, and mulch.

Acknowledgement should also be given to the following individuals:

Dr. Richard Horner	University of Washington
Michael Dorman	Versar, Inc.
John Qualls	Regional Manager of South Region (Distict 3, Maintenance and Landscape)
Larry Burroughs	Superintendent of South Region (District 3, Maintenance and Landscape)
Harold Hunt	Transportation Laboratory, REC Branch
Ed Girdler	Transportation Laboratory, ECE Branch
Jesse Perez	Transportation Laboratory, ECE Branch
Eileen Matsushima	Transportation Laboratory, ECE Branch
Christine Portillo	Transportation Laboratory, ECE Branch

ClibPDF - www.fastio.com

ClibPDF - www.fastio.com

TABLE OF CONTENTS

	Page
INTRODUCTION	1
PHASE I	2
OBJECTIVES	4
PAST RESEARCH	5
TOXICITY REDUCTION OF STORMWATER RUNOFF BY USE OF VEGETATION CONCEPT	6
RESEARCH ON POLLUTANTS	7
RESEARCH ON TYPES OF VEGETATION	9
RESEARCH ON RUNOFF SAMPLERS	10
THE PROBLEM	12
SITE SELECTION CRITERIA	13
SITE SELECTION	14
FOLLOW-UP	15
SITE DESCRIPTION	
Site 1 - Howe Avenue, U.S. 50	17
Site 2 - Watt Avenue, U.S. 50	18
SAMPLING APPARATUS CONCEPT	19
Design of The Runoff Sampler	20
RESEARCH SITE SETUP	22
Irrigation Installation	23
Runoff Sampler Installation	25
Grass Establishment	26
REFERENCES	28
APPENDIX A	A-1
APPENDIX B	B-1

ClibPDF - www.fastio.com

ClibPDF - www.fastio.com

LIST OF FIGURES

		Page
1	Location Map	A-2
2	Site 1 Map	A-3
3	Site 2 Map	A-4
4	Sampler Diagram	B-2
5	Sampler Dimensions (Type A)	B-3
6	Sampler Dimensions (Type B)	B-4
7	Sampler Dimensions (Type C)	B-6
8	Sampler Dimensions (Type D)	B-5

ClibPDF - www.fastio.com

ClibPDF - www.fastio.com

INTRODUCTION

Highways have major impacts upon society and the environment in both beneficial and nonbeneficial ways. The highway system can be a potential contributor of harmful pollutants to the surrounding environment. Storm-generated runoff transports pollutants which collect on highway surfaces through the highway drainage system to aquatic ecosystems. Some pollutants which accumulate on the highway surface originate from highway use and highway maintenance. In order to maintain the quality of the aquatic environment a method for managing these pollutants must be used.

Previous research has indicated that vegetated channels are effective in removing pollutants from highway runoff. The low cost, minimal maintenance and uncomplicated design requirements make vegetative controls a favorable selection over other management measures. Although a vegetated channel may be advantageous in many ways, it may not be adaptable to specific site conditions in various areas.

The climate and weather conditions existing throughout much of California during the months of June through September are not favorable for the growth of vegetation. Vegetation dies or becomes dormant during the annual summer drought. New growth begins after the start of the winter rainy season. Therefore, it is necessary to research the vegetated channel concept in California.

ClibPDF - www.fastio.com

ClibPDF - www.fastio.com

PHASE I

The research project "The Use of Vegetation to Reduce the Toxicity of Stormwater Runoff" has a three-phase work plan. This report presents the findings of Phase I which covers preliminary research and preparation of the equipment and sites prior to initiation of the testing. Phase I was comprised of five tasks and covered a period of approximately six months.

Task 1 required the collection and review of literature pertaining to vegetative treatment of highway runoff pollution and sample collection for highway runoff studies. During the preparation of the research project proposal, a literature survey was conducted. The majority of the pertinent literature was gathered during Phase I, but this effort will continue throughout the duration of the project.

Task 2 involved the selection of the research study sites. There are several criteria upon which the sites were selected. The criteria are as follows:

1) Safe and easy access from the highway.
2) Proximity to Transportation Laboratory
3) Existing water lines
4) Annual Average Daily Traffic exceeding 40,000
5) Restrictions on where the water enters the channel

For more information refer to SITE SELECTION CRITERIA on page 14. Due to limited funds, the research is being conducted at two sites. Another project may be scheduled if positive results are achieved.

ClibPDF - www.fastio.com

Task 3 involved the preparation of the runoff samplers. The samplers were designed to suit the selected sites. Drawings of the samplers were prepared and submitted to the machine shop for fabrication of the samplers.

Task 4 involved channel preparation and runoff sampler installation. An irrigation system was installed prior to seeding the channel and installing the samplers. After the grass seeds and fertilizer were scattered by hand, a mulch was placed over the seeds for protection. Soaker hoses were used along the length of the channels for watering.

Task 5 required the preparation of an interim project report. This report summarizes activities during Phase 1 and what was discovered during the literature survey.

Phase II began following completion of Phase I. This phase, consisting of sample collecting and field and laboratory testing, is expected to last approximately eighteen months. Phase II requires important tasks to be completed that will determine the success of the vegetated channel. It is essential that sufficient samples are collected properly so as not to alter the samples as they are received from the highway. The samples will be analyzed in Phase III and conclusions and recommendations will then be made based upon the results.

ClibPDF - www.fastio.com

OBJECTIVES

This research project is initiated with the intent of determining:

1) If dead or dormant vegetation effectively reduces the toxicity of and removes pollutants from highway stormwater.

2) The amount of metallic pollution discharged from vegetated ditches via the transport of dead vegetation.

3) The type of maintenance practices that are necessary to maintain the pollutant removal capacity of vegetated channels.

ClibPDF - www.fastio.com

ClibPDF - www.fastio.com

PAST RESEARCH

The literature search discovered that channel studies were performed by the University of Washington in cooperation with the Washington State Department of Transportation. The studies were undertaken to compare the concentrations of lead and zinc in stormwater runoff versus the distance traveled through paved channels, mud-bottomed ditches and grass channels.

The studies revealed that runoff flowing in paved channels travels at sufficiently high velocities to prevent sedimentation. Therefore, as expected, a steady decline in lead and zinc concentrations was not observed with distance traveled in the paved channel. The mud channels were only capable of reducing lead concentrations by a minimal amount. The most favorable results were achieved with grassed channels. The majority of the metals were removed from the runoff within the first 60 to 80 meters of the channel (2).

It has been proven by the University of Washington that vegetated channels are successful in reducing metal concentrations in runoff. However, an important point to keep in mind is that the weather conditions prevalent throughout most of the State of Washington support the growth of vegetation nearly year round. This is not the case in California.

ClibPDF - www.fastio.com

ClibPDF - www.fastio.com

TOXICITY REDUCTION OF STORMWATER RUNOFF BY USE OF VEGETATION CONCEPT

Vegetation in a channel serves as a flow retarder and a filtering device. The vegetation creates a roughness along the channel walls which reduces the velocity of the traveling water and diminishes the turbulence. The solid phase pollutants will filter out and settle more readily between the blades of grass when the water in the channel is flowing at low velocities (3). The vegetation may absorb the pollutants into the plant tissue and the soil may also absorb pollutants as the runoff percolates into the ground.

As the stormwater runoff flows through the vegetated channel, a reduction in toxicity is expected. The principal goal is to release pollutant-free runoff to water bodies and assure that aquatic resources are not contaminated. If the vegetated channel concept is successful in Sacramento, its use would be recommended wherever practical.

It is important to remember that there are several factors which may affect sedimentation such as the amount and size of the particles, the slope, length and shape of the channel and the type of vegetal lining in the channel (4).

The type of grass is important in determining the filtering efficiency. The density, blade size, blade shape, flexibility and texture of the grass varies with different species (4). For this reason, it is necessary to select the species of grass that will provide the best results.

ClibPDF - www.fastio.com

ClibPDF - www.fastio.com

RESEARCH ON POLLUTANTS

The Federal Highway Administration has completed a research project titled "Sources and Migration of Highway Runoff Pollutants". The authors conclude that the majority of the metal load consists of lead, zinc, and iron with other metals present in runoff including copper, cadmium, and nickel (5). The vehicles traveling on the highway are responsible for most of the pollutants found on the highway. The pollutants may originate from the vehicle itself or be transported by the vehicle from other areas.

The primary source of lead deposited on the highway is the exhaust of vehicles using leaded gasoline. Today, newer model vehicles use only unleaded fuels. Vehicle tires also contain lead and some zinc which are product additives. Tire wear will leave lead and zinc deposits on the highway. Lead and zinc may also be found in grease and oils. Deteriorating vehicle body parts and steel highway components (guard rail and barriers) are the main sources of iron deposited on the highway. Iron may also come from soluble iron salts found in rocks along the highway (5).

The quantity and quality of the pollutants contained in highway runoff can be affected by the existing conditions in the area. Pertinent conditions are traffic characteristics, (speed, volume, type of vehicles, stopping and accelerating) highway drainage system (gutters, curbs, ramps, pavement material), maintenance practices (sweeping, mowing, chemical spraying, pavement repairs), weather characteristics (form of precipitation, intensity, duration, temperature), land use (residential, industrial, agricultural, commercial) and accidental spills (5, 6).

ClibPDF - www.fastio.com

The pollutants which accumulate on the surface of the highway may be transported by rainfall, snowmelt and wind. The pollutants are released from the highway surface by the weather action and mechanical movement of the vehicle tires. The rate of removal of pollutant matter from the highway depends on the intensity of precipitation, size of the particles and pavement characteristics (6).

The pollutants will have an effect on water bodies which receive runoff from highway drainage systems. The degree to which the pollutants will affect the receiving water depends on the existing conditions in the area. Those conditions are listed above. The long-term effect of constant pollution accumulation would create a problem. The accumulation of pollutants within an aquatic ecosystem over a period of time would raise the pollutant level above the allowable limits set by water quality criteria for aquatic life, water supply and recreational use (6). A method to control the problem must be implemented to reduce the impact of pollutants on water resources.

This research project is concerned mainly with the heavy metals found in highway runoff and will not cover particulates, organics, pesticides, herbicides, and nutrients.

ClibPDF - www.fastio.com

RESEARCH ON TYPES OF VEGETATION

The type of vegetative covering used in the channel will affect the amount of reduction in the toxicity of the runoff. Research has discovered that tall, dense stands of turf forming grasses are most efficient at removing pollutants (4). The stability of the channel will also affect the amount of pollutants removed. Channel erosion will add sediments and reduce the removal efficiency. Thus, the channel should be stabilized if the soil type is not erosion resistant.

Previous investigations have discovered that the naturally occurring grasses such as rye, fescue, Reed Canary, and Bermuda efficiently remove pollutants from runoff. Kentucky 31 Tall Fescue and Reed Canary grasses perform best in cold and warm climates (7). Tall fescue and orchard grasses germinated successfully under low nutrient conditions and on a slope (7). Reed Canary grass works well as a pollutant remover in different climates, but does require considerable amounts of nutrients and water to survive (7).

This research project will use the type of grass that is commonly planted in the area for controlling erosion. Bromus mollis and Hykon rose clover are two common types of grasses that are planted by landscape maintenance for erosion protection. Bromus mollis has been chosen for this study.

ClibPDF - www.fastio.com

ClibPDF - www.fastio.com

RESEARCH ON RUNOFF SAMPLERS

A number of research projects have been conducted to test for the presence of pollutants in highway runoff. Different types and models of samplers were used at various sites.

Basically, there are two types of samplers that are used, discrete and composite. The discrete sampler operates by collecting single samples of runoff at scheduled times. The composite sampler will continuously collect a fraction of the runoff and combine the samples to form a composite sample. Composite samples represent an average value for a storm event, whereas the discrete samples are individual values representing time increments during a storm event.

There are both advantages and disadvantages in using either the discrete or composite samplers. The sampler which is chosen to be used at the research site will depend upon the circumstances of the project and which type will be appropriate for what is needed. The main objective is to obtain representative samples that are reliable. The conclusions drawn from the results of the research will determine if the project was successful and if the vegetated channel concept is applicable to Sacramento and other areas with similar weather conditions.

A water pollution project pursued by Caltrans in 1975 through 1978 involved the use of a discrete sampler at one of the research sites. The site was equipped with a 1391 Automatic Water Sampler manufactured by Instrument Systems Company (ISCO). Due to a number of unexpected malfunctions the use of the sampler was discontinued and samples were taken manually (8).

ClibPDF - www.fastio.com

Another project was undertaken by Caltrans in 1979 through 1981 to estimate the quality of highway runoff. A discrete sampler manufactured by ISCO such as the Automatic Water Sampler (Model 1680) with a high-speed pump and the Bubbler Flow Meters (Model 1870) were used to collect samples (9). The samplers were modified by ISCO at the request of the Caltrans investigators to suit the needs of the project. There was no mention of any major problems occurring with the sampling equipment used.

The University of Washington in conjunction with the Washington State Department of Transportation performed a highway runoff monitoring study. A composite sampler was designed to accommodate each research site. The samplers contained a flow-splitting device designed to continuously remove a fixed fraction of the total runoff volume (10). The samplers performed satisfactorily during the research period.

The University of Washington also did a comparison study between discrete and composite samplers. The study compared cost and operation requirements. The cost to purchase a discrete sampler was considerably higher than the cost to fabricate the composite sampler. The discrete sampler also required more preparation and on-site monitoring than the composite sampler. Overall, the comparison showed that the composite sampler has more advantages than the discrete sampler, but selection of the sampler depends upon the preference of the investigators (10). For this project composite samplers will be used.

ClibPDF - www.fastio.com

THE PROBLEM

Since the climate in most of California during the summer season will not support the growth of vegetation, it is necessary to determine if California and other areas with similar weather conditions will benefit from the vegetated channel concept.

There is concern that the early storms will release the particles containing pollutants from the dead vegetation which accumulated during the previous rainy season. It is also possible for pollutants to be absorbed into the tissues of plants and later exported from the channel when the vegetation dies and breaks away.

Therefore, in order to determine the type and cost of maintenance necessary to keep vegetation systems functioning efficiently in California, it is necessary to do initial research with vegetated channels and determine how the pollutants will travel when the vegetation is dead or dormant.

ClibPDF - www.fastio.com

ClibPDF - www.fastio.com

SITE SELECTION CRITERIA

Two independent sites were selected for this research project. Both sites are located in Sacramento along highway U.S. 50 at the two major interchanges. Highway U.S. 50 westbound carries the bulk of the traffic traveling towards highway Business 80 leading to the downtown Sacramento area. The sites were selected based on the following criteria:

1) Safe and easy access from the highway but away from the flow of traffic. This will create safe working conditions for the investigators as well as prevent any disturbance during the collection of samples and minimize interference.

2) Proximity to the Transportation Laboratory. A site located nearby the Transportation Laboratory would be convenient when the investigators are required to make frequent unexpected site visits.

3) Existing irrigation system. The grass seeds in the channel will need water for germination and the initial growth of the vegetation.

4) Annual Average Daily Traffic exceeding 40,000. An ADDT over 40,000 is necessary to assure a detectable level of pollutants in the stormwater runoff.

5) Restrictions on where water enters the channel. The runoff should enter the channel at a discrete point so that a decline in toxicity can be measured along the linear run of the channel.

ClibPDF - www.fastio.com

ClibPDF - www.fastio.com

SITE SELECTION

The amount of funding allotted for the project restricted the number of site selections to two. The area of preference for the research was in the vicinity along highway U.S. 50 between 65th Street and Sunrise Boulevard.

The criteria upon which the sites were selected were critical to the outcome of the research. Yet, in most cases it was difficult to find a site which satisfied all criteria. Therefore, by using careful judgment, the best qualified sites were chosen.

The 65th Street interchange was one of the options for a research site although after a site visit was conducted it was decided that this area would not be used. The runoff flowing through the culverts originates from the east bound on-ramp. The volume of vehicles traveling on the ramp does not meet the annual average daily traffic count of 40,000 or more vehicles. This would not produce a detectable level of pollutants in the stormwater required for the bioassays.

Another option was at the Bradshaw Road interchange. The area provides easy access and safe working conditions, but there is no existing irrigation system and runoff traveling through the culvert flows from Bradshaw Road. Bradshaw Road has an annual average daily traffic of 29,500. This does not meet the requirement of 40,000 or more vehicles. Therefore, this location would not be suitable for this research.

The Howe Avenue and Watt Avenue interchanges were appropriate sites for the research since all criteria were met satisfactorily. At both sites there is ample working space

ClibPDF - www.fastio.com

to conduct the research safely and without any interference. Existing irrigation systems will provide the water necessary to start the growth of the grass. At the Howe Avenue site the runoff flows from the westbound highway U.S. 50 and from the westbound Howe Avenue off-ramp. The runoff at the Watt Avenue site flows directly from westbound highway U.S. 50. The annual average daily traffic along U.S. 50 at both interchanges is well over 40,000 and thus meets the requirement. The channels are long enough to provide flow distances between samplers that will result in toxicity reductions that are readily apparent.

The two research sites are approximately 1.71 miles apart. Since the sites are separated by a short distance the same weather and traffic conditions exist at both locations. At the Howe Avenue site, the runoff initially flows through an earth-bottom channel prior to flowing into the vegetated channel.

FOLLOW-UP

Following the selection of the Howe Avenue and Watt Avenue sites, the investigators met with John Qualls who is the Regional Manager of Maintenance and Landscape (South Region, District 3), Larry Burroughs, Superintendent of Maintenance and Landscape (South Region, 730 Unit) and the foreman responsible for the maintenance in the area. The purpose of the meeting was to inform the maintenance division of the proposed work prior to the initiation of the project and to find out if there were any objections and any plans for construction in the vicinity during the research period. The primary goal is to have the investigators perform the necessary procedures to complete the research without interfering with routine maintenance practices in the area. There was concern

ClibPDF - www.fastio.com

that the grass mowers would have difficulty operating in the research channel without disturbing the sampling devices. Herbicide spraying was also a concern. The possibility of additional toxics entering the research area at some point along the channel other than from the freeway would produce invalid results.

Therefore, it was agreed by the investigators and the maintenance division that any work done in the area by the crew will be done around the channel and sampling equipment until the grass has seeded. Once the grass has grown it may be mowed, but not sprayed with herbicide.

ClibPDF - www.fastio.com

ClibPDF - www.fastio.com

SITE 1: HOWE AVENUE, U.S. 50

Site 1 is located along westbound U.S. 50 near P.M. 3.67. Refer to Appendix A on page A-2, Figure 1 for a location map and Figure 2 on page A-3 for a map of the site.

Westbound U.S. 50 is a four lane freeway which has a portland cement concrete pavement. Approximately 4.64 acres of freeway contributes runoff into the channel. The runoff sheet flows to a ditch which parallels the freeway and the Howe Avenue off-ramp. A portion of the runoff also drains into drop inlets located in the median. The runoff from each source flows through 18-inch asbestos cement pipes and discharges into an earth-bottomed channel approximately 344 feet in length. The runoff then flows through an 18-inch culvert under the westbound U.S. 50 on-ramp and enters to the vegetated channel. The vegetated channel is approximately 363 feet long. The average daily traffic is 129,000 vehicles (eastbound and westbound). The research area is landscaped with various trees and shrubs. Some of the trees and shrubs include raywood ash, honey locust, coast redwood, coffee berry, ceanothus and western redbud.

ClibPDF - www.fastio.com

SITE 2: WATT AVENUE, U.S. 50

Site 2 is located along westbound U.S. 50 near P.M. R5.4. Refer to Appendix A on page A-2, Figure 1 for a location map and Figure 3 on page A-4 for a map of the site.

Approximately 0.44 acres of freeway area contribute runoff into the channel. Westbound U.S. 50 is a four lane freeway which has a portland cement concrete pavement. The runoff flows into two consecutive drop inlets (Type G1) located within the 8-foot paved shoulder on the north side of the freeway. The runoff travels through an 18 inch asbestos concrete pipe and discharges into the vegetated channel which is approximately 181 feet in length. The runoff exits the channel through a 24-inch reinforced concrete pipe. There is a third culvert located to the west of the culvert at the end of the channel. The third culvert also contributes runoff to the channel. Therefore, the third sampler was placed above the point where the runoff enters the channel. This will insure that the runoff sampled by the third sampler will not include the runoff from the third culvert. The annual average daily traffic is 119,000 vehicles (eastbound and westbound). The area is landscaped with various trees and shrubs. Some of the trees and shrubs include the honey locust, coast redwood, interior live oak, cork oak, and western redbud.

ClibPDF - www.fastio.com

SAMPLING APPARATUS CONCEPT

In order to determine how the pollutants in highway runoff will travel through vegetation, samples will be collected at various points along the channel. The bioassays performed will be aimed at detecting a change in the toxicity as the runoff travels through the vegetated channel. Therefore, one sampler will be placed at the outlet culvert entrance which initially drains runoff into the channel. This will produce a sample of runoff as it comes directly from the highway. A second sampler will be placed approximately midway down the channel. This sampler will collect runoff to test for a reduction in toxicity after traveling half the distance of the channel through vegetation. The third sampler will be placed to determine the level of metal concentration in the runoff as it is released to receiving waters. A screen will be placed at the end of the third sampler to collect the material that is being exported from the channel. The material will then be analyzed to determine the pollution content.

It was decided that there was no need for a protective covering over the equipment. The investigators felt that vandalism would not be a problem and the research area was far enough away from the flow of traffic so as not to create an unsafe environment for the motorist who must pull over and make an emergency stop.

ClibPDF - www.fastio.com

ClibPDF - www.fastio.com

DESIGN OF THE RUNOFF SAMPLER

The samplers used for this project were designed for simplicity and reliability. The research is expected to last approximately two years and the sampling equipment should be able to withstand the weather conditions and resist deterioration. Therefore, the material chosen to construct the sampler was sheet metal instead of wood or any other types of material that could not withstand weathering.

There is no available source of electricity at the test sites. Thus, a manually operated composite sampler was designed. There are no complicated operation maneuvers required so it is highly improbable that any complications will occur.

The sampling device consists of two sections. For each section there are two different designs. The different types of samplers were designed to accommodate the culvert entrance and to provide the necessary equipment that will allow for the collection of debris samples. One section is a channel with a rectangular cross section. The right vertical sidewall is hinged on one end and serves as a door. The door will divert the runoff through a channel leading to the sample container via the outlet pipe when it is opened. Type A is equipped with a removable trash screen whereas Type B is not. Refer to Figure 4 for a diagram of the various types. Figures 5 and 6 on pages B-3 and B-4 in Appendix B provide a diagram including dimensions.

The second section is also a channel with a rectangular cross section channel which spans the width of the vegetated channel. This section will concentrate the flow down the sampler. The channel then tapers to a smaller width and

ClibPDF - www.fastio.com

connects to the first section. Type C has the vertical sidewall cut back at the wider opening unlike Type D. Refer to Appendix B for Figure 4 on page B-2 for a diagram of the various types and Figures 7 and 8 provide a diagram including dimensions.

The two sections of the sampler are joined with rivets and the edges caulked to provide a tight seal.

Sampler 1, which is located at the culvert entrance where the runoff enters the vegetated channel, consists of Type B and Type C sections. Sampler 2, located midway down the channel, consists of Type B and Type D sections. Sampler 3, located at the end of the channel just before the culvert entrance where the runoff exits the channel, consists of Type A and Type D sections. Refer to Appendix A for Figure 2 and 3 on pages A-3 and A-4 for a site location map showing the location of each sampler.

ClibPDF - www.fastio.com

RESEARCH SITE SETUP

The research sites were selected prior to the winter rainy season which occurs during the months of October through May. The irrigation system, grass seed and samplers were installed in July of 1988.

In Sacramento, precipitation falls as rain. The temperature usually does not reach a level that is low enough to produce snow. On rare occasions, portions of Sacramento may experience a brief shower of hail.

Sacramento has experienced very dry winter seasons during 1986 and 1987. If another dry winter season is experienced during this research period, the project will be extended until the necessary amount of runoff samples are collected to do the bioassay tests.

ClibPDF - www.fastio.com

ClibPDF - www.fastio.com

IRRIGATION INSTALLATION

Before initiating the irrigation setup, a copy of the project plans for highway planting for the research area was obtained from headquarters. The plans included a plant list and specifications, existing irrigation and landscaping layout, and details of the pipe assembly. Having the plans available was helpful in locating existing lines and valves and in designing the layout for the new irrigation system. The irrigation system for both the Howe Avenue and Watt Avenue site was then designed.

Prior to installing the irrigation system an on-site exploration of the existing system was conducted to determine the actual layout of the pipe connections at the metering valve. Decisions were then made on how and where to tie in the new system to the existing system. Pipe supplies and soaker hoses were purchased and installation began soon after the supplies were obtained.

Installation of the irrigation system at the Watt and Howe Avenue sites began on July 21 and 22, 1988. The backflow preventer assembly was located and the valve was turned off to stop the supply of water through the pipes. The new irrigation line was connected to the existing two-inch main water supply line ahead of the existing metering valve. Another metering valve was installed to control the volume of water that will flow through the new pipes. This will avoid having to turn the existing and the new metering valve on in order to get water to flow through the new irrigation system. Only the new valve will control the new system. The metering valve operates by selecting a desired volume of water on the dial and the valve will turn off after that volume of water

ClibPDF - www.fastio.com

has been released to the system. The maximum volume capacity of the metering valve is 500 gallons. That it does not require electrical power to function made the installation less complicated.

One-inch polyvinyl chloride (PVC) pipes were used to supply water along the length of the channel. Hose fittings were connected every 50 feet. The soaker hoses were attached to the hose fittings. The PVC pipes and the soaker hoses run along the center of the channel.

On August 8 a break in the PVC pipe at the Watt Avenue site was observed. The break was located near the end of the channel just before sampler 3. Tire tracks were seen coming from the Howe Avenue off-ramp and over the irrigation pipes. A break approximately 18 inches in length resulted. The area of the breakage was repaired by cutting the pipe on both ends of the break and a coupling was used to connect the two ends. No problems resulted during irrigation the next day.

ClibPDF - www.fastio.com

RUNOFF SAMPLER INSTALLATION

The samplers were installed at the Watt and Howe Avenue sites on July 21 and 22, 1988. The natural shape of the channel is V-shaped with flat side slopes. The sides of the channel were excavated to allow the runoff samplers to be placed flat instead of bent to the shape of the channel.

Each sampler was fabricated by the machine shop as two separate sections. This made transporting the samplers to the site easier. The two sections were fitted together and several holes were drilled along the sides and bottom of both sections for the rivets which were used to join the sections together. Caulk was placed between the seams to seal the connection. This was done for all the samplers.

The runoff sampler located at the inlet culvert was fitted into the flared section of the culvert. At both the Howe and Watt Avenue sites there was a buildup of sand, cobbles and debris at the culvert exit. The buildup was cleared so that the sampler could be placed flat and level. The surface of the flared section of the culvert was cleaned so that caulk could be applied where the sampler was placed. After fitting the sampler into the culvert, more caulk was applied to seal any open spaces. Soil and rocks were placed around the sampler to hold it in place.

ClibPDF - www.fastio.com

ClibPDF - www.fastio.com

GRASS ESTABLISHMENT

The Howe Avenue and Watt Avenue sites were seeded on July 26, 1988. The day before the seeds were to be scattered each channel was irrigated with 500 gallons of water to soften the soil.

The channel surface was raked first to loosen the soil. The grass seeds (Bromus Mollis) were mixed together with the fertilizer and some sand. Adding sand to the mixture made it easier to scatter the seeds and fertilizer evenly throughout the channel by hand. This avoided using too much at the beginning of the channel and not having enough towards the end. After the seeds and fertilizer were scattered, the channel was raked once again to mix the seeds into the soil. A fiber mulch which consisted of newsprint and corrugated cardboard was spread over the seeds for protection against drying due to hot weather conditions. Finally, the channel was irrigated with 500 gallons of water. The channel was irrigated with 500 gallons of water once a day (preferably in the morning), 7 days a week for approximately 2 months. At the end of 2 months the winter rainy season is expected to begin.

Germination of the grass seeds was observed one week after distributing the seeds in the channel. At the Watt Avenue site, the seeds were germinating throughout the entire length of the channel. The Howe Avenue site was not germinating as well as the Watt Avenue site. There may be herbicide present in the channel prohibiting the seeds from germinating. Following a site visit on August 18, it was decided that more seeds should be scattered. Therefore, on August 24, three

ClibPDF - www.fastio.com

more pounds of Bromus mollis seeds were scattered at the Watt Avenue site. Three pounds of Hykon rose clover and a quarter pound of Bermuda grass seeds were scattered at the Howe Avenue site.

ClibPDF - www.fastio.com

REFERENCES

1) National Environmental Policy Act, Pub. L. 91-190, 42 U.S.C. 4321-4347, January 1, 1970, as amended by Pub. L. 94-52, July 3, 1975, and Pub. L. 94-83, August 9, 1975.

2) Wang, Tzn-Siang, Dimitris E. Spyridakis, Brian W. Mar and Richard Horner, "Transport Deposition and Control of Heavy Metals in Highway Runoff". A report prepared for the Washington State Department of Transportation, WA-RD 39.10, January 1980.

3) Kao, David T., "Sediment Filtration Efficiency of Continuous Grass Media", University of Kentucky. A report prepared for the Office of Water Research and Technology, Washington, D.C., Volume I, No. 124, 1980.

4) Dorman, M.E., J. Hartigan, F. Johnson, B. Maestri, "Retention, Detention and Overland Flow for Pollutant Removal From Highway Stormwater Runoff". A report prepared for the Federal Highway Administration, Report No. FHWA/RD-87/056, June 1987.

5) Kobriger, N.P., and A. Geinopolos, "Sources and Migration of Highway Runoff Pollutants", Rexnord Inc. A report prepared for the Federal Highway Administration, Final Report, May 1984.

6) Gupta, M. K., R. W. Agnew, N. P. Kobriger, "Constituents of Highway Runoff, State-of-the-Art Report", Envirex Inc. A report prepared for the Federal Highway Administration, Volume I, February 1981.

7) Horner, Richard R., "Highway Runoff Water Quality Research Implementation Manual". A report prepared for the Washington State Department of Transportation, Volume 2, Final Report, WA-RD 72.2, August 1985.

8) Howell, Richard B., "Water Pollution Aspects of Particles Which Collect on Highway Surfaces", California Department of Transportation, Report No. FHWA/CA/TL-78/22, July 1978.

9) Racin, James A., Richard B. Howell, Gary R. Winters and Earl Shirley, "Estimating Highway Runoff Quality", California Department of Transportation, Report No. FHWA/CA/TL-82/11, September 1982.

10) Clark, David L., and Brian W. Mar, "Composite Sampling of Highway Runoff - Year 2". A report prepared for the Washington State Department of Transportation:, Report No. 3, January 1980.

ClibPDF - www.fastio.com

REFERENCES NOT CITED

a) Kao, David T. Y., and Billy J. Barfield, "Prediction of Flow Hydraulics for Vegetated Channels", Transactions of the ASAE, Volume 21, No. 3, May-June 1978.

b) Watson, David, "Hydraulic Effects of Aquatic Weeds in U.K. Rivers", Regulated Rivers: Research and Management, Volume I, 211-227, 1978.

c) Bell, John H., Arian Consultants, Inc., Coral Gables, Martin P. Wanielista, "Use of Overland Flow in Storm-Water Management on Interstate Highways", Transportation Research Record 736, 1979.

d) Kerri, Kenneth D., James A. Racin, and Richard B. Howell, "Forecasting Pollutant Loads From Highway Runoff", Transportation Research Record 1017.

e) Tollner, Ernest W., Billy J. Barfield, and John C. Hayes, "Sedimentology of Erect Vegetal Filters", Journal of the Hydraulics Division, ASCE Volume 108, No. HY12, December 1982.

f) Asplund, R., J. F. Ferguson, B. W. Mar, "Characterization of Highway Runoff in Washington State". A report prepared for the Washington State Department of Transporttion, Report No. 6, December 1980.

g) Horner, Richard R., Stephen J. Burges, John F. Ferguson, Brian W. Mar, Eugene B. Welch, "Highway Runoff Monitoring: The Initial Year May 1977 - August 1978". A report prepared for the Washington State Department of Transportation, January 1979.

h) Aye, Robert D., "Criteria and Requirements for Statewide Highway Runoff Monitoring Sites". A report prepared for the Washington State Department of Transportion, July 1979.

i) Gupta, M.K., R. W. Agnew, T.L. Meinholz, "Constituents of Highway Runoff, Procedural Manual for Monitoring of Highway Runoff". A report prepared for the Federal Highway Administration, Volume II, Final Report, February 1981.

j) Gupta, M.K., R. W. Agnew, D. Gruber, W. Kreutzberger, "Constituents of Highway Runoff, Characteristics of Highway Runoff from Operating Highways". A report prepared for the Federal Highway Administration, Volume IV, Final Report, February 1981.

ClibPDF - www.fastio.com

APPENDIX A

LOCATION MAP AND SITE MAPS

ClibPDF - www.fastio.com

ClibPDF - www.fastio.com

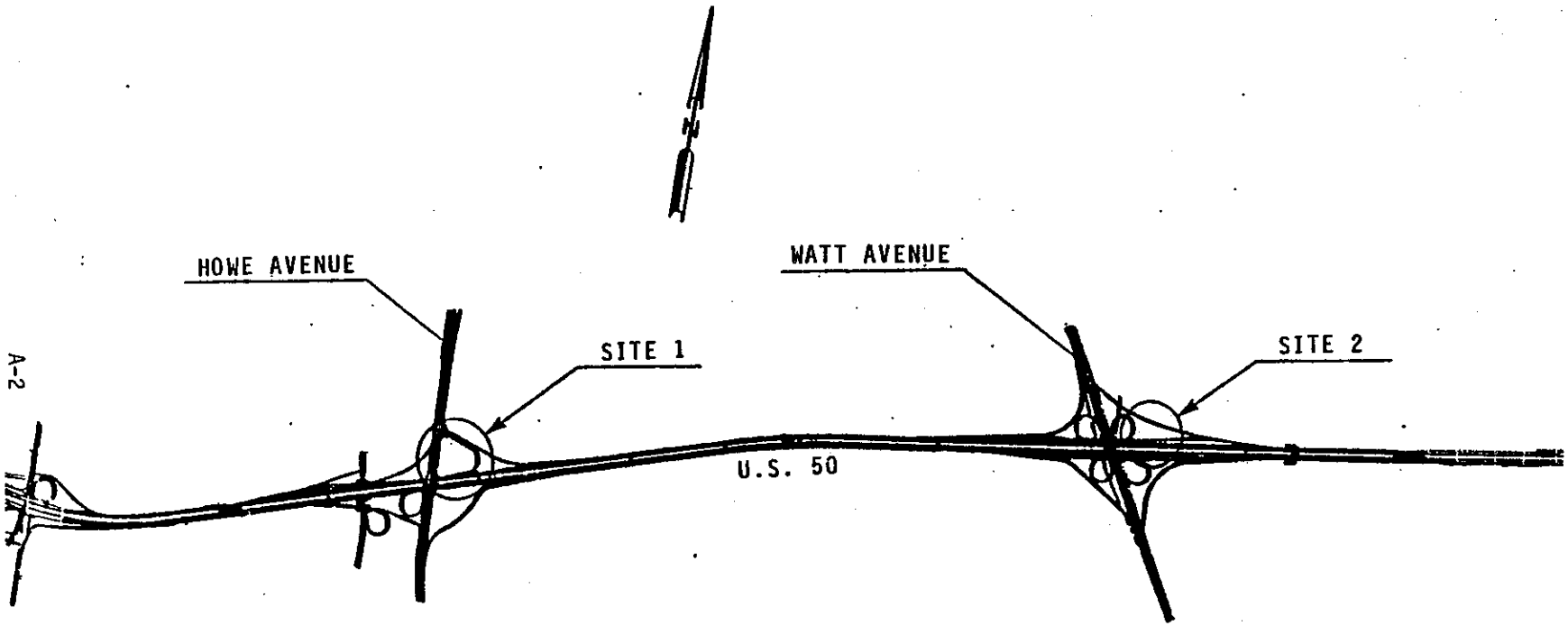

SACRAMENTO

LOCATION MAP

FIGURE 1

ClibPDF - www.fastio.com

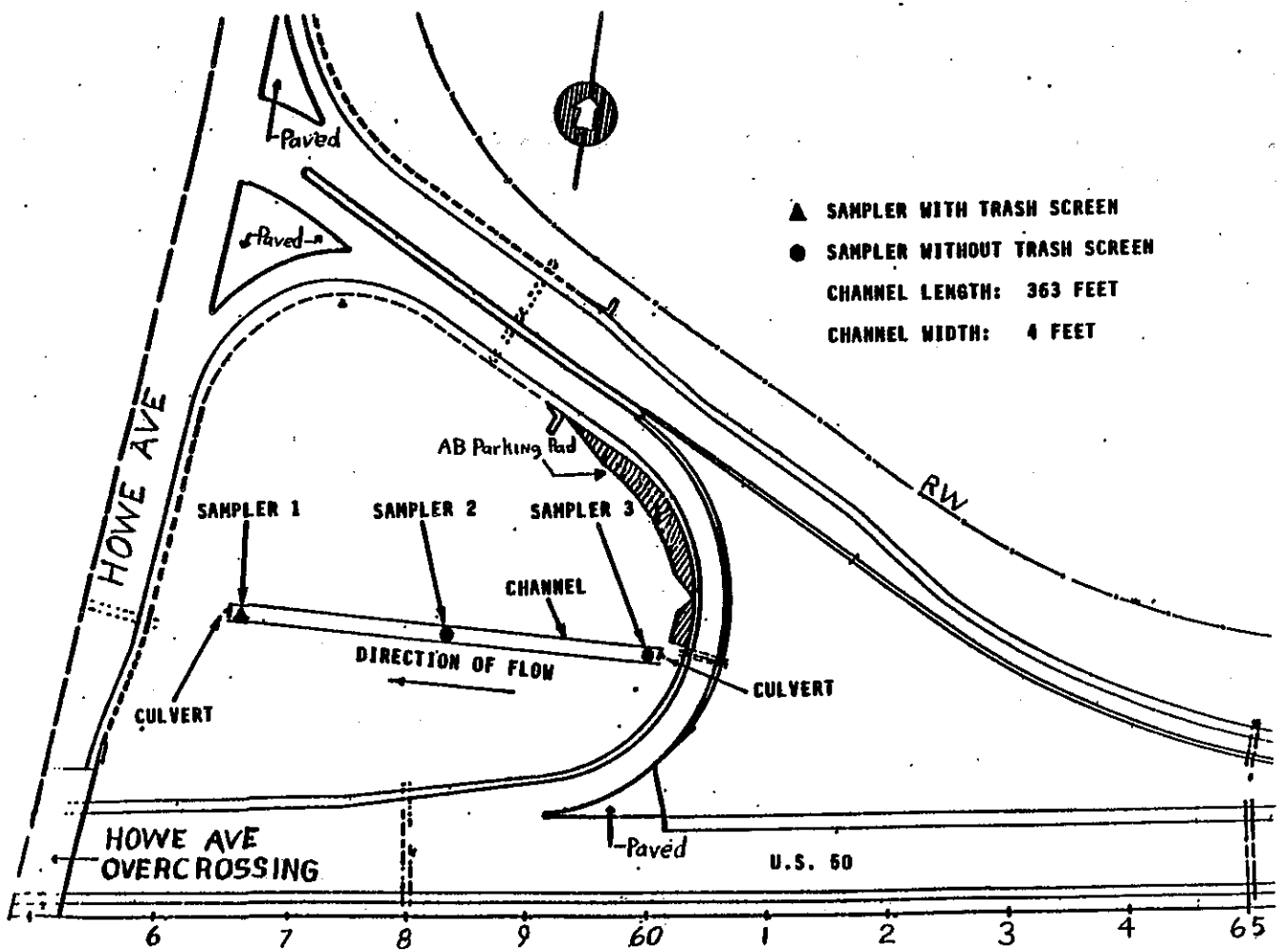

SITE 1 MAP
FIGURE 2

SCALE: 1" = 100'

ClibPDF - www.fastio.com

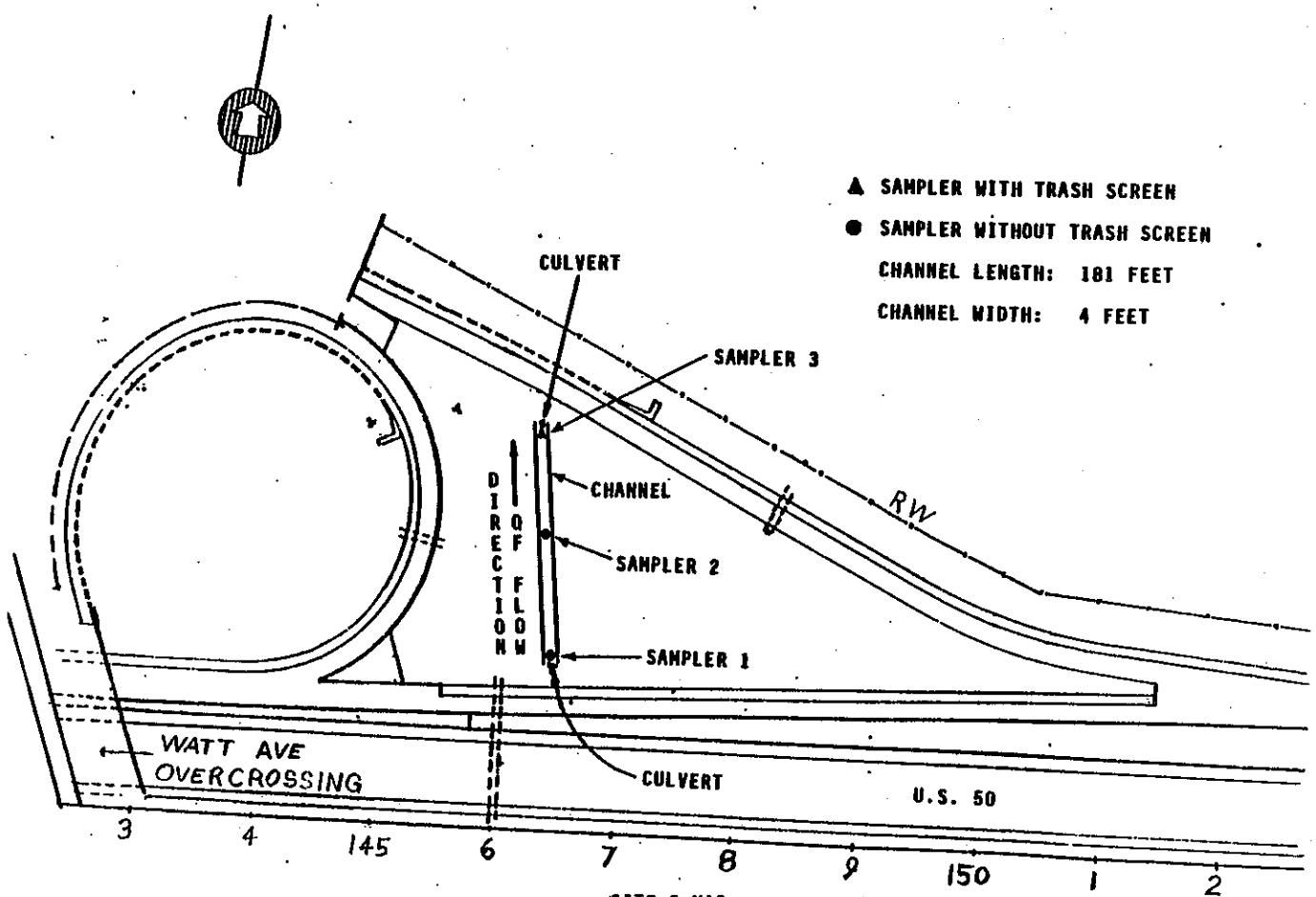

SITE 2 MAP
FIGURE 3

ClibPDF - www.fastio.com

ClibPDF - www.fastio.com

APPENDIX B

SAMPLER DIAGRAMS

ClibPDF - www.fastio.com

ClibPDF - www.fastio.com

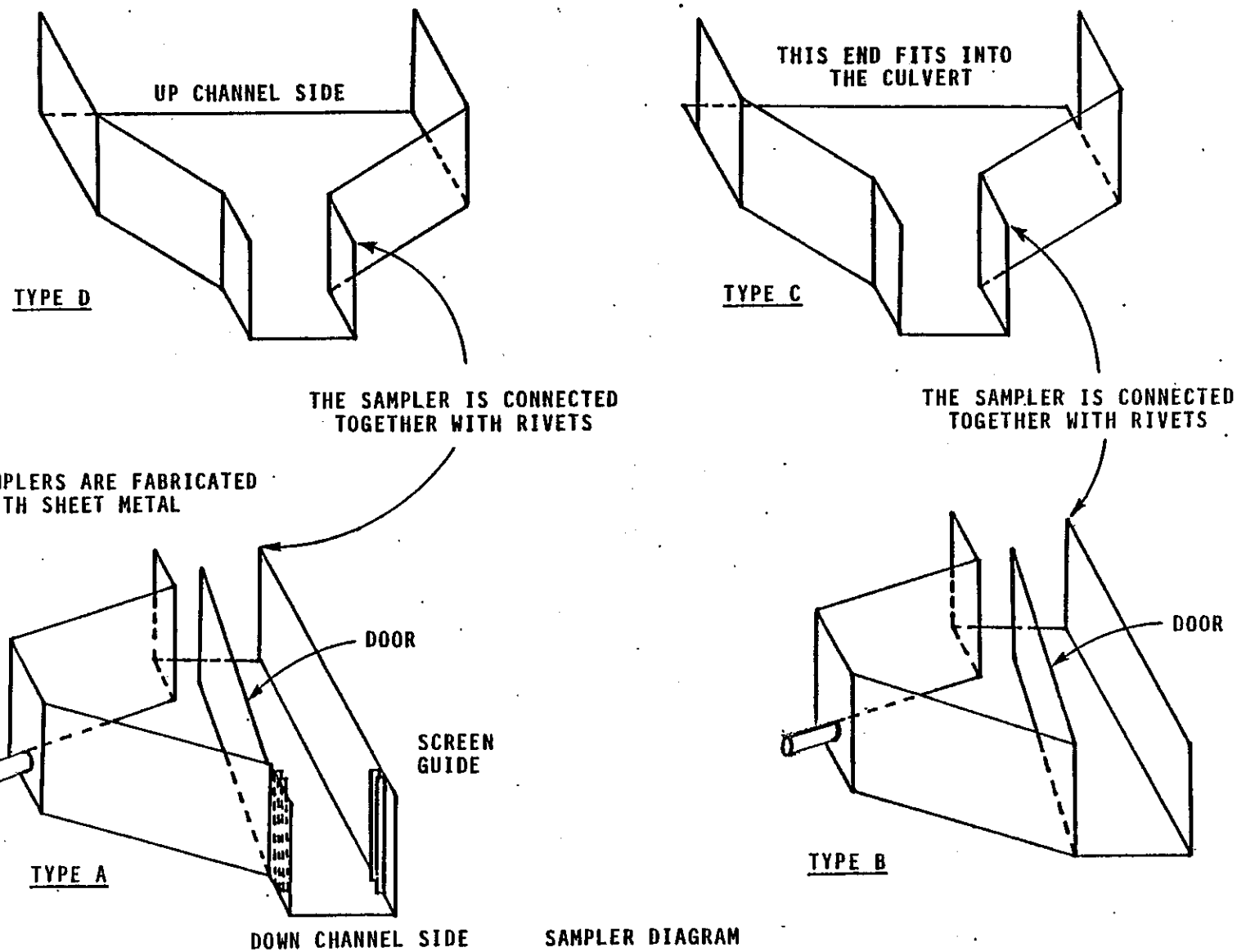

NOTE:

THE SAMPLERS ARE FABRICATED WITH SHEET METAL

SAMPLER DIAGRAM

FIGURE 4

ClibPDF - www.fastio.com

ClibPDF - www.fastio.com

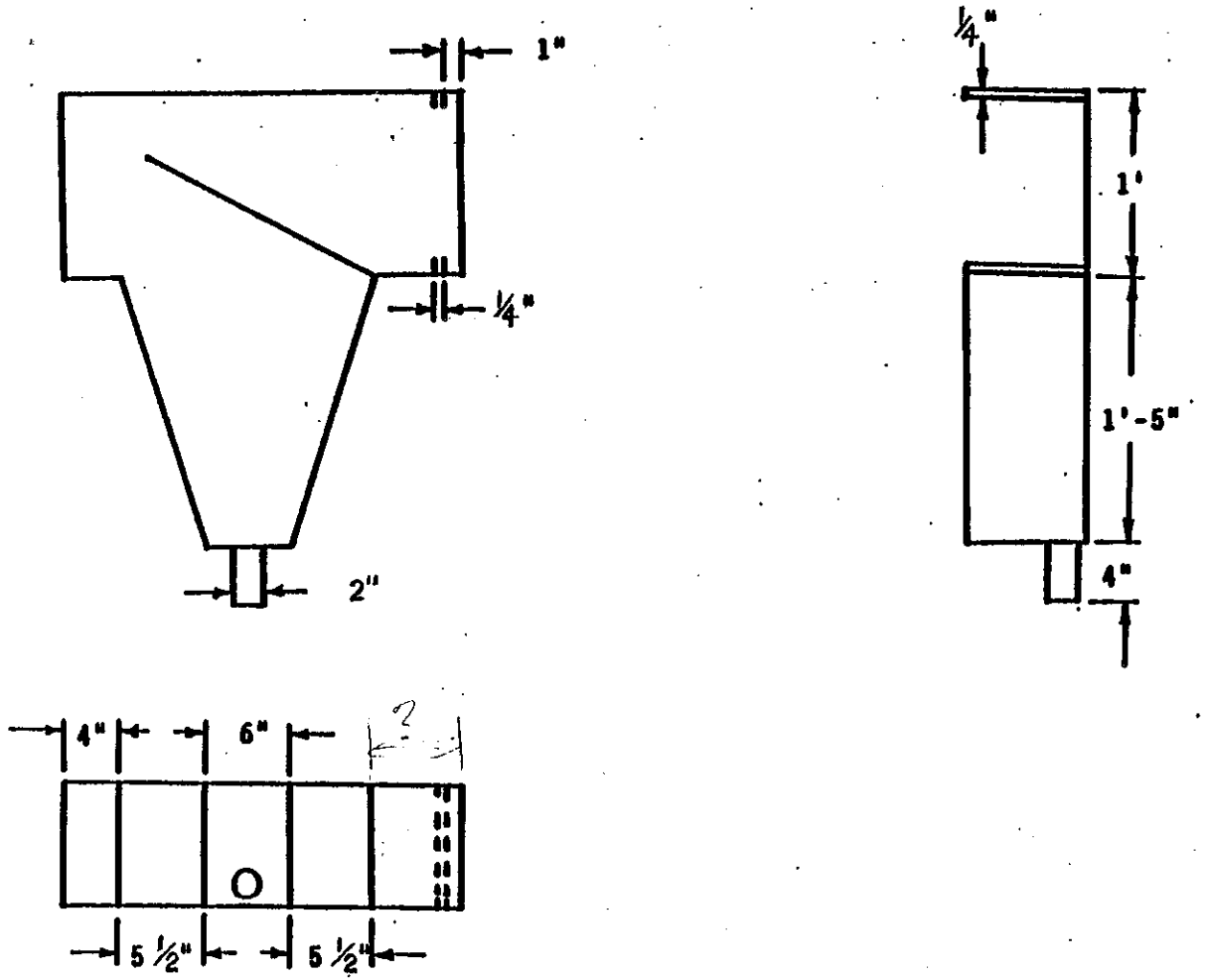

SAMPLER DIMENSIONS - TYPE A

FIGURE 5.

ClibPDF - www.fastio.com

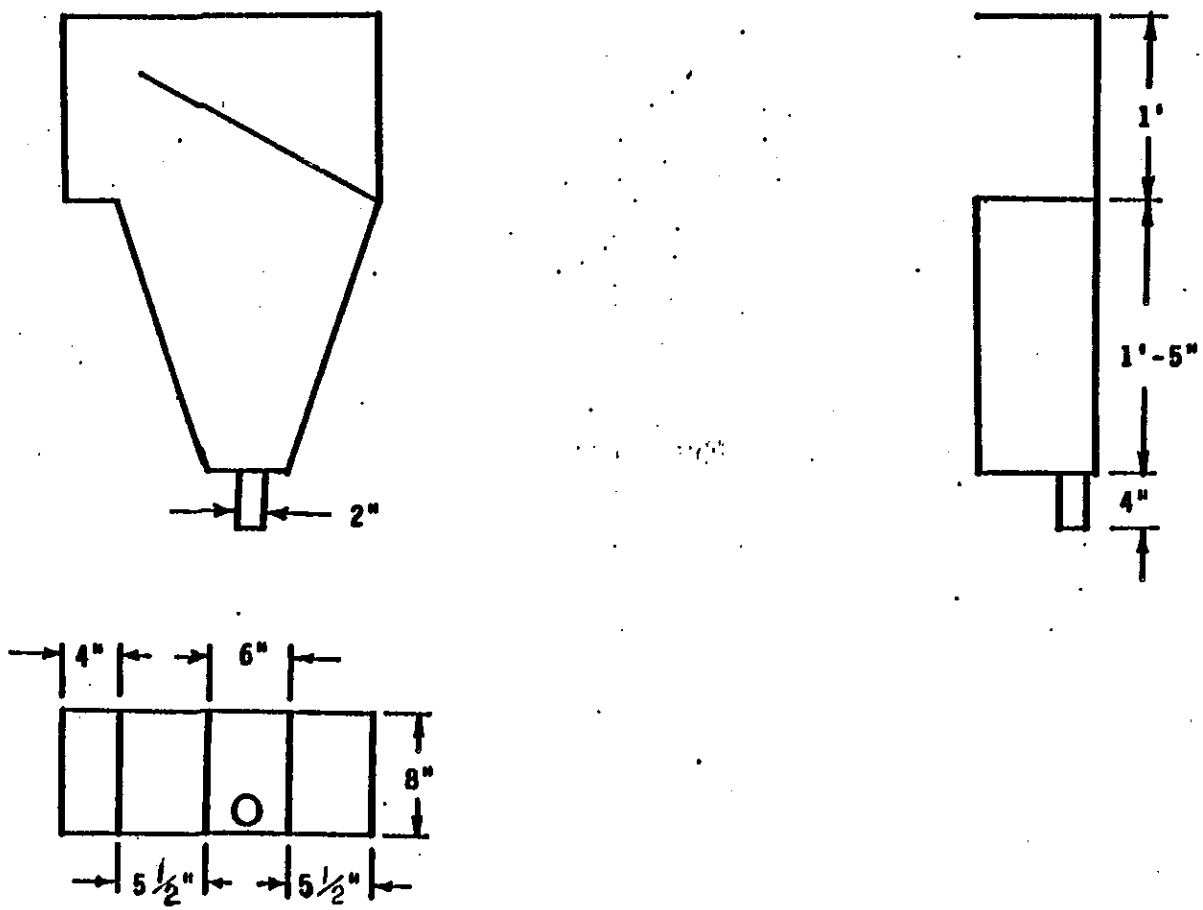

SAMPLER DIMENSIONS - TYPE B
FIGURE 6

ClibPDF - www.fastio.com

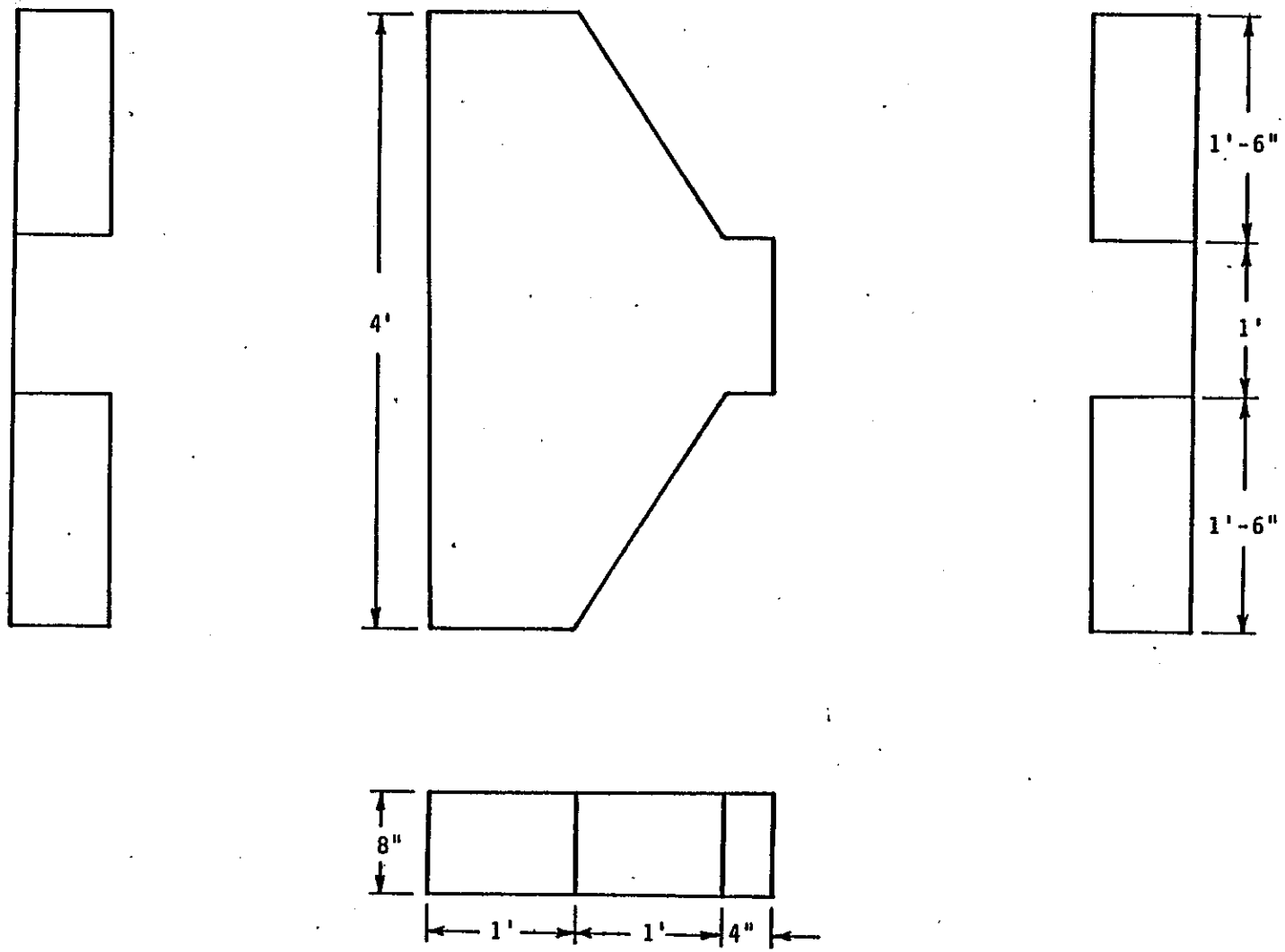

SAMPLER DIMENSIONS - TYPE D

FIGURE 8

ClibPDF - www.fastio.com

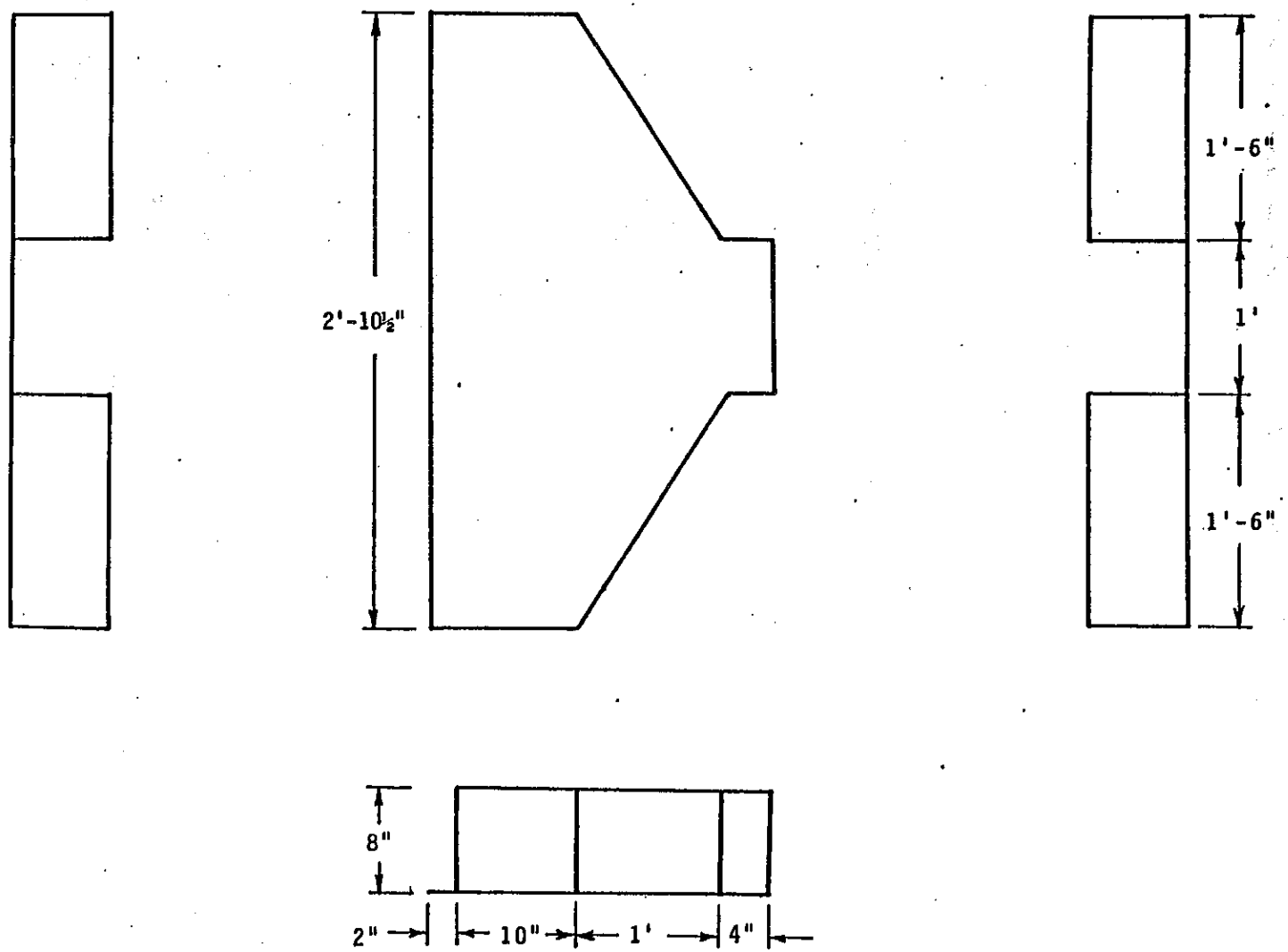

SAMPLER DIMENSIONS - TYPE C

FIGURE 7

ClibPDF - www.fastio.com