STATE OF CALIFORNIA
DEPARTMENT OF TRANSPORTATION
DIVISION OF ENGINEERING SERVICES
OFFICE OF TRANSPORTATION LABORATORY

VEHICLE IMPACT TESTS OF A SEE-THROUGH, COLLAPSING RING, STRUCTURAL STEEL TUBE, BRIDGE BARRIER RAILING

Study Supervised by ..... Ikuo (Mike) Nagai, P.E.

Principal Investigator ..... J. Robert Stoker, P.E.

Co-Principal Investigators ..... Roger L. Stoughton, P.E.
Philip Hale, Jr., P.E.

Report Prepared by ..... Roger L. Stoughton, P.E.

RAYMOND A. FORSYTH, P.E.
Acting Chief
Office of Transportation Laboratory

83-05

ClibPDF - www.fastio.com

83-05

ClibPDF - www.fastio.com

TECHNICAL REPORT STANDARD TITLE PAGE

1. REPORT NO. FHWA/CA/TL-83/05	2. GOVERNMENT ACCESSION NO.	3. RECIPIENT'S CATALOG NO.
4. TITLE AND SUBTITLE VEHICLE IMPACT TESTS OF A SEE-THROUGH, COLLAPSING RING, STRUCTURAL STEEL TUBE, BRIDGE BARRIER RAILING		5. REPORT DATE June 1983
		6. PERFORMING ORGANIZATION CODE
7. AUTHOR(S) R. L. Stoughton, J. R. Stoker, I. Nagai, P. Hale, Jr., and R. W. Bishop		8. PERFORMING ORGANIZATION REPORT NO. 19601-636966
9. PERFORMING ORGANIZATION NAME AND ADDRESS Office of Transportation Laboratory California Department of Transportation Sacramento, California 95819		10. WORK UNIT NO.
		11. CONTRACT OR GRANT NO. F83TL07
12. SPONSORING AGENCY NAME AND ADDRESS California Department of Transportation Sacramento, California 95807		13. TYPE OF REPORT & PERIOD COVERED Final
		14. SPONSORING AGENCY CODE

15. SUPPLEMENTARY NOTES

This study was conducted in cooperation with the U.S. Department of Transportation, Federal Highway Administration.

16. ABSTRACT California has used a 32-inch high concrete parapet bridge rail with a New Jersey profile as the standard for most bridges in the past 10 years. A few transportation districts requested an alternate design that would allow motorists to see through the rail better in scenic areas. With this impetus, Caltrans proceeded to develop and crash test a new bridge barrier railing that would meet the following objectives: 1) Conform to the most recent crash test standards in National Cooperative Highway Research Program Report 230, 2) Provide good "see-through" spaces, 3) Absorb some energy from vehicle impacts through the use of collapsing steel pipe rings, 4) Enhance the ability of bridge decks to be self-cleaning during sandstorms, 5) Keep spaces between rails large enough that snow plows could push snow through the rails, 6) Develop the height and strength of the railing to handle light to moderate impacts by buses and trucks. Two crash tests were conducted including one with a 1979 Honda Civic weighing 1850 lbs, traveling 59.7 mph, and impacting at a 12° angle, and one with a 1977 Ford LTD weighing 4530 lbs, traveling at 60.7 mph and impacting at an angle of 23°. Static crush tests were also conducted on two steel pipe rings. It was concluded that the crash tests satisfied the requirements for structural adequacy, occupant risk, and vehicle trajectory in NCHRP Report 230, and in addition, the railing reasonably met the other objectives. The new design called Metal Railing (Tubular) Type 18 has been adopted as a standard and is ready for trial use.

17. KEY WORDS Barriers, bridge rail, collapsing rings, crash tests, steel barriers, vehicle impact tests.	18. DISTRIBUTION STATEMENT No restrictions. This document is available to the public through the National Technical Information Service, Springfield, VA 22161.

19. SECURITY CLASSIF. (OF THIS REPORT)	20. SECURITY CLASSIF. (OF THIS PAGE)	21. NO. OF PAGES	22. PRICE
Unclassified	Unclassified		

DS-TL-1242 (Rev.6/76)

ClibPDF - www.fastio.com

ClibPDF - www.fastio.com

NOTICE

The contents of this report reflect the views of the Office of Transportation Laboratory which is responsible for the facts and the accuracy of the data presented herein. The contents do not necessarily reflect the official views or policies of the State of California or the Federal Highway Administration. This report does not constitute a standard, specification, or regulation.

Neither the State of California nor the United States Government endorse products or manufacturers. Trade or manufacturers' names appear herein only because they are considered essential to the object of this document.

ClibPDF - www.fastio.com

ClibPDF - www.fastio.com

CONVERSION FACTORS

English to Metric System (SI) of Measurement

Quantity	English unit	Multiply by	To get metric equivalent
Length	inches (in)or(")	25.40	millimetres (mmm)
		.02540	metres (m)
	feet (ft)or(')	.3048	metres (m)
	miles (mi)	1.609	kilometres (km)
Area	square inches (in^2)	6.432×10^{-4}	square metres (m^2)
	square feet (ft^2)	.09290	square metres (m^2)
	acres	.4047	hectares (ha)
Volume	gallons (gal)	3.785	litres (l)
	cubic feet (ft^3)	.02832	cubic metres (m^3)
	cubic yards (yd^3)	.7646	cubic metres (m^3)
Volume/Time			
(Flow)	cubic feet per second (ft^3/s)	28.317	litres per second (l/s)
	gallons per minute (gal/min)	.06309	litres per second (l/s)
Mass	pounds (lb)	.4536	kilograms (kg)
Velocity	miles per hour (mph)	.4470	metres per second (m/s)
	feet per second (fps)	.3048	metres per second (m/s)
Acceleration	feet per second squared (ft/s^2)	.3048	metres per second squared (m/s^2)
	acceleration due to force of gravity (G)	9.807	metres per second squared (m/s^2)
Weight Density	pounds per cubic (lb/ft^3)	16.02	kilograms per cubic metre (kg/m^3)
Force	pounds (lbs)	4.448	newtons (N)
	kips (1000 lbs)	4448	newtons (N)
Thermal Energy	British thermal unit (BTU)	1055	joules (J)
Mechanical Energy	foot-pounds (ft-lb)	1.356	joules (J)
	foot-kips (ft-k)	1356	joules (J)
Bending Moment or Torque	inch-pounds (ft-lbs)	.1130	newton-metres (Nm)
	foot-pounds (ft-lbs)	1.356	newton-metres (Nm)
Pressure	pounds per square inch (psi)	6895	pascals (Pa)
	pounds per square foot (psf)	47.88	pascals (Pa)
Stress Intensity	kips per square inch square root inch (ksi $\sqrt{in}$)	1.0988	mega pascals $\sqrt{metre}$ (MPa $\sqrt{m}$)
	pounds per square inch square root inch (psi $\sqrt{in}$)	1.0988	kilo pascals $\sqrt{metre}$ (KPa $\sqrt{m}$)
Plane Angle	degrees (°)	0.0175	radians (rad)
Temperature	degrees fahrenheit (F)	$\frac{tF - 32}{1.8} = tC$	degrees celsius (°C)

ClibPDF - www.fastio.com

ClibPDF - www.fastio.com

ACKNOWLEDGEMENTS

This work was accomplished in cooperation with the United States Department of Transportation, Federal Highway Administration, Item F83TL07 of Work Program HPR-PR-0010(006), Part II Research titled, "Vehicular Impact Tests of a Contemporary, See-Through Structural Steel Bridge Barrier Railing".

Special appreciation is due the following staff members of the Transportation Laboratory for their enthusiastic and competent help on this project:

Eric Nordlin, retired, proposed concept for barrier design at beginning of project. James Keesling, crash test coordination and preparation, data reduction, and test film handling. John Dautel, assistance with test barrier plans, specifications and contract paperwork, test barrier construction inspection, crash test preparation, and static tests on barrier component samples. Suema Hawatky, crash test preparation and data reduction. Eldon Wilson, crash test preparation. Roy Steiner, preparation of test vehicle and crash test preparation. Richard Johnson, William Ng, Delmar Gans and Robert Caudle, electronic instrumentation and data reduction. Leoncio Lopez, drafting for final report. Darla Bailey, word processing of final report. Richard Spring, Ronald Rehwald and Walt Richards, static tests of barrier component samples.

ClibPDF - www.fastio.com

ClibPDF - www.fastio.com

Other persons from Caltrans who made important contributions were:

Ralph Bishop. Although not listed as a project investigator, he was the key person in the Office of Structures Design who prepared the plans and specifications for the bridge rail and provided technical consultation throughout the project. Harold Herr, Office of Structures Design, test barrier contract specifications. Edward Tye, Division of Traffic Engineering, technical consultation. Robert Rose, Ed Anderson and Don Tateishi, Headquarters Photo Section, crash test photography. Larry Moore and William Metzel, Headquarters Graphic Services, film report.

Persons outside of Caltrans who provided technical consultation were:

Maurice Bronstad, Southwest Research Institute. Eugene Buth, Texas Transportation Institute. John Viner and Charles McDevitt, FHWA.

Test barrier contractors were:

Trans-Sierra Construction, Inc., concrete deck. Capitol Iron Works, Inc., bridge rail.

ClibPDF - www.fastio.com

ClibPDF - www.fastio.com

TABLE OF CONTENTS

	Page
ACKNOWLEDGEMENTS	ii
1. INTRODUCTION	1
1.1 Problem	1
1.2 Background and Literature Search	2
1.3 Objectives - Scope	14
2. CONCLUSIONS	16
3. RECOMMENDATIONS	18
4. IMPLEMENTATION	19
5. TECHNICAL DISCUSSION	20
5.1 Test Conditions	20
5.1.1 Test Facilities	20
5.1.2 Bridge Rail Design	20
5.1.3 Test Barrier Construction	26
5.1.4 Test Vehicles	28
5.1.5 Data Acquisition Systems	28
5.2 Test Results	30
5.2.1 Test 411 (1850 lbs/59.7 mph/12°)	30
5.2.2 Test 412 (4530 lbs/60.7 mph/23°)	41
5.3 Discussion of Test Results	51
5.3.1 General - Safety Evaluation Guidelines	51
5.3.2 Structural Adequacy	52
5.3.3 Occupant Risk	53

ClibPDF - www.fastio.com

ClibPDF - www.fastio.com

TABLE OF CONTENTS (Continued)

	Page
5.3.4 Vehicle Trajectory	56
5.3.5 Metal Tube Bridge Railing - Standard Designs in California	57
5.4 Discussion of Other Evaluation Factors	59
5.4.1 See-Through Properties	59
5.4.2 Self-Cleaning and Snow Removal Properties	66
5.4.3 Costs	69
6. REFERENCES	71
APPENDICES	
A. Test Vehicle Equipment and Cable Guidance System	75
B. Photo-Instrumentation	80
C. Electronic Instrumentation and Data	84
D. Static Tests on Collapsing Rings and Bridge Rail Component Samples	98
E. Metal Railing (Tubular) Type 18 - Test Barrier Plans and Proposed Standard Plan	118

ClibPDF - www.fastio.com

ClibPDF - www.fastio.com

1. INTRODUCTION

1.1 Problem

A solid concrete parapet 32 inches high with a New Jersey safety-shape profile is the current standard bridge barrier railing specified for California highways. This barrier has been installed for several years on new and updated bridges on primary and secondary highways with few exceptions. It has proven to be a strong, economical, and effective design.

Recently, some of the transportation districts have requested an open type barrier that will allow motorists to see through it more easily. This type of barrier was sought where there was a scenic view from the bridge, and where increased visibility was desired at vertical and horizontal curves. An open barrier could also be beneficial where heavy snowfalls and sandstorms created the need for a self-cleaning deck and made attractive the possibility of clearing the bridge deck by pushing the snow through the railing.

Although California has tested some see-through railings in the past, none have been tested under the requirements of National Cooperative Highway Research Program (NCHRP) Report 230(1)* published in March 1981. This report requires tests with 1800-lb cars for the first time, reflecting the dramatic shift in vehicle size in recent years. These light vehicles often behave differently than the 4500-lb

*Numbers in parentheses refer to a reference list at the end of this report.

ClibPDF - www.fastio.com

passenger cars used for past tests. Thus, any bridge barrier railing design, old or new, proposed as a standard to provide the see-through feature must be crash tested to verify its compliance with NCHRP Report 230(1).

1.2 Background and Literature Search

Figure 1 shows the bridge railing designs used in the 1950s and before. They had never been crash tested. The first vehicular crash tests that Caltrans conducted were in 1953 on bridge curbs. The curbs were intended to keep vehicles on the bridge, but it became apparent they were effective only for low impact speeds and small angles of impact.

Caltrans conducted the first crash tests on bridge barrier railings in the U.S. in 1955(2). Figures 2A and 2B show the barriers tested in 1955 plus all the other bridge barrier railings Caltrans has crash tested through 1983. Table 1 lists the vehicle weight, speed and angle of impact for each test plus the test results.

Bridge Rail Trial Design 1 (Figure 2A) was crash tested to check on a prototype barrier being used on a few viaduct structures under construction in San Francisco. Bridge Rail Trial Designs 2, 3 and 5 (Figure 2A) were tested to find the minimum barrier height needed and the maximum distance the "rail" parapet could be set back from the "rubbing" curb without allowing the vehicle to climb the curb(2). This series of tests resulted in the Type 1 and 2 bridge barrier railing designs in 1958 which were stronger than the test barriers and were the Caltrans standard for several years. These designs were much stronger than the requirements in the then current AASHO bridge railing specifications, and they were the first real "barrier" railings proven to resist severe vehicle impacts effectively.

ClibPDF - www.fastio.com

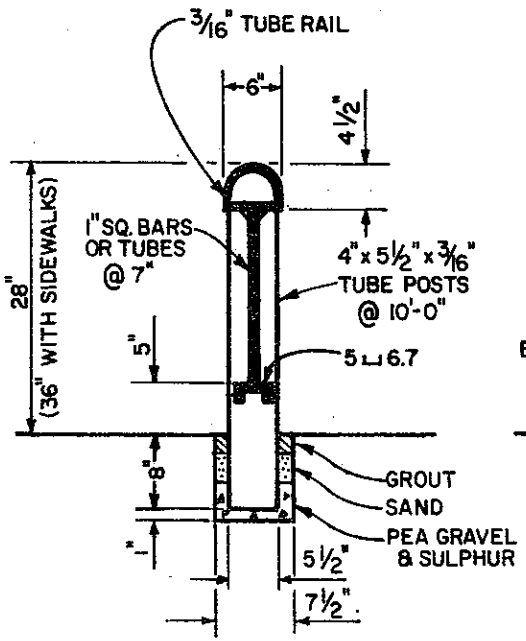

STEEL BALUSTER
FOR URBAN PRIMARY HWYS.

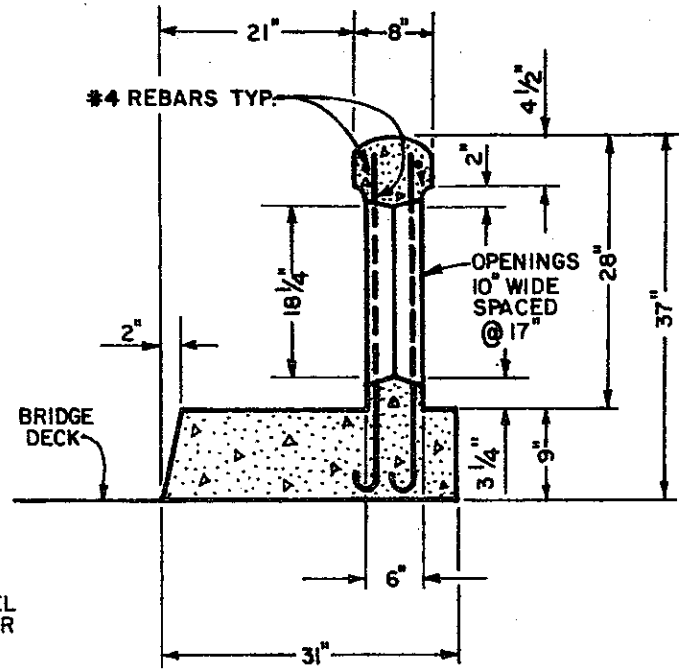

CONCRETE BALUSTER
FOR RURAL PRIMARY HWYS.

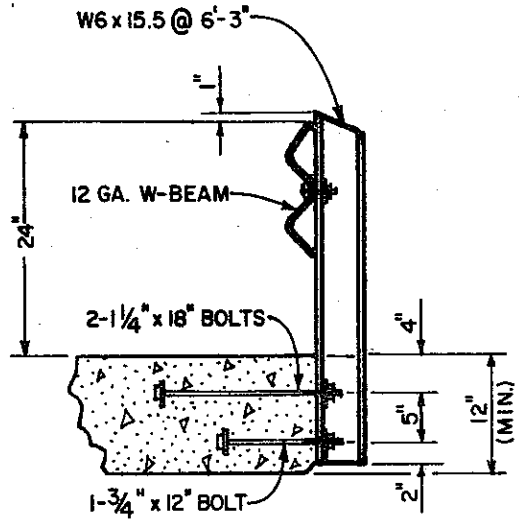

METAL BEAM
FOR RURAL SECONDARY HWYS.

CALIFORNIA BRIDGE RAILINGS – 1950'S AND EARLIER

FIGURE 1

ClibPDF - www.fastio.com

ClibPDF - www.fastio.com

TABLE 1

Summary of Caltrans Bridge Rail Test Results

Barrier Designation	Test Conditions	Comments
Bridge Rail Trial Design 1	46 Buick/50 mph/20°	Good, parapet cracked
Bridge Rail Trial Design 2	49 Ford/48 mph/30°	Parapet failed, car straddled rail
Bridge Rail Trial Design 3	49 Ford/48 mph/30°	Good, parapet cracked
Bridge Rail Trial Design 3	49 Ford/55 mph/20°	Good, parapet cracked
Bridge Rail Trial Design 5	49 Ford/50 mph/20°	Good, parapet cracked
Concrete Baluster Design I	3,700 lb/57 mph/28°	Car penetrated barrier
Concrete Baluster Design II	3,700 lb/59 mph/29°	Good
Concrete Baluster Design II	3,700 lb/57 mph/29°	Good
Concrete Baluster Design II	17,500 lb/31 mph/28°	Bus penetrated barrier
Metal Beam	4,000 lb/55 mph/30°	Excessive rail deflection (5')
Type 1	4,300 lb/76 mph/25°	Three posts and rail sections torn off; parapet cracked
Type 1	4,300 lb/73 mph/25°	Good
Type 1	4,300 lb/78 mph/25°	Good
Type 2	4,300 lb/76 mph/25°	Good
Modified Type 1	4,300 lb/77 mph/25°	Good
Type 8	4,520 lb/69 mph/25°	Bad test, car hit near end of test barrier
Type 8	4,520 lb/59 mph/25°	Good
Type 8	4,520 lb/62 mph/23°	Good
Modified Type 8	4,520 lb/66 mph/25°	Post anchorage failed, car penetrated barrier and cartwheeled

ClibPDF - www.fastio.com

TABLE 1 (Continued)

Summary of Caltrans Bridge Rail Test Results

Barrier Designation	Test Conditions	Comments
Type 9	4,540 lb/57 mph/26°	Good
Type 20	4,980 lb/45 mph/7°	Good
	4,980 lb/66 mph/7°	Good
	4,900 lb/64 mph/15°	Good
	4,980 lb/64 mph/7°	Good
	4,900 lb/66 mph/25°	Good, but severe impact
Type 15	4,550 lb/64 mph/12°	Good, barrier too stiff
	4,550 lb/59 mph/14°	Good, barrier too flexible
Modified Type 20	4,895 lb/47 mph/5°	Good
	4,895 lb/54 mph/5°	Good
	4,895 lb/57 mph/5°	Good
	4,895 lb/62 mph/5°	Good
	4,895 lb/57 mph/10°	Good
	4,895 lb/65 mph/15°	Good
	4,895 lb/72 mph/25°	Car tore off steel rail and straddled parapet, then rolled
Type 18	1,850 lb/59.7 mph/12°	Good
	4,530 lb/60.7 mph/23°	Good

ClibPDF - www.fastio.com

Concrete Baluster Design I and the metal beam design (Figure 2A) were similar to existing designs in widespread use which had never been tested(3). The concrete baluster failed when the car penetrated the openings and attacked the vertical "posts" individually. The metal beam rail deflected five feet, far too much for a bridge railing. The Concrete Baluster Design II (Figure 2A) was intended as a reinforced concrete version of the Type 1 barrier. It was effective when tested with cars but failed when hit by a bus. It was not recommended for use because of the large openings which could cause problems in some impacts even though the solid concrete bottom portion of the barrier was higher than in Design I.

Crash tests were conducted on variations of the Type 1 and 2 barriers (Figure 2B) in 1962-1963 in order to refine the designs(4). Except for one test where aluminum posts and railing were torn off, the test barriers were effective. With minor changes, these designs were established as standard plans. The test results had a strong influence on the upgraded 1965 AASHO bridge rail specifications.

Although the Type 1 and 2 bridge railings were effective in use, at some locations they limited the sight distance of motorists, particularly from some newer cars with lower heights. Also, in some areas of the state, there were requests for a railing with no parapet on the deck so that the deck would be self-cleaning in sand and snowstorms. The Type 8 railing (Figure 2B) was developed to provide a see-through and self-cleaning barrier(5). Crash tests and field experience were satisfactory; however, on high bridges, motorists tended to shy away from the railing because of its openness (detected from the oil dripline on the pavement that shifted to the left side of the lane on bridges). The Type 8 is used now infrequently (Figure 3).

ClibPDF - www.fastio.com

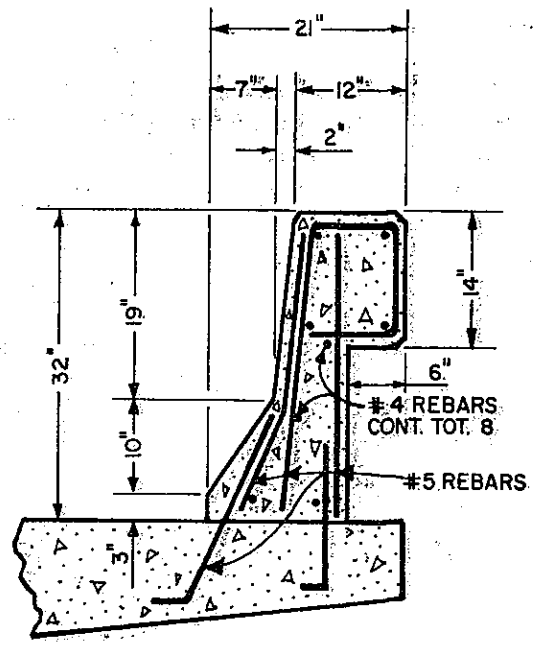

TYPE 25
STANDARD DESIGN
FOR MOST STRUCTURES

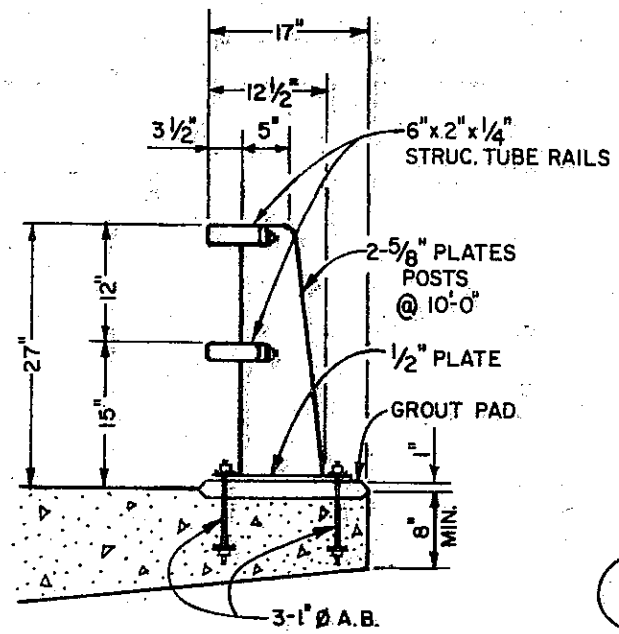

TYPE 8
LIMITED USE

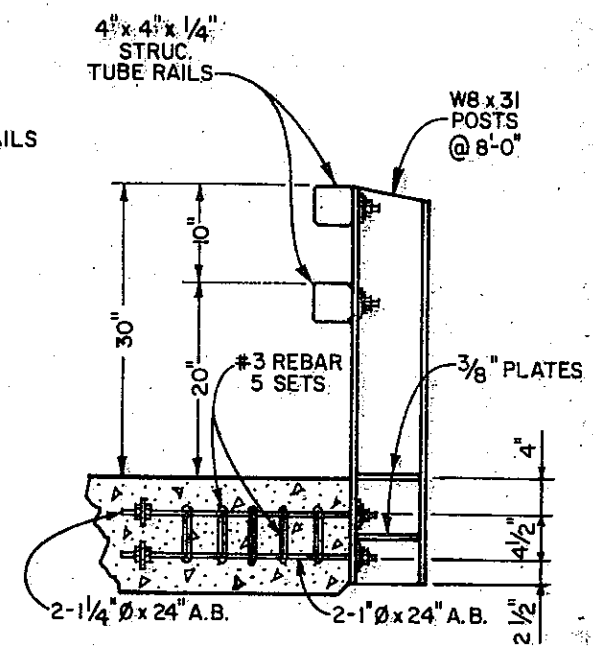

TYPE 115
RURAL SECONDARY
HIGHWAYS

CALIFORNIA STANDARD BRIDGE BARRIER RAILINGS-1982

FIGURE 3

ClibPDF - www.fastio.com

The Type 9 railing (Figure 2B) was developed to maintain the low height and some of the openness of the Type 8, yet appear more substantial through the use of a 15-inch concrete parapet which replaced the lower steel tube rail on the Type 8 railing(6). The parapet was also intended to provide protection from falling debris off the edge of bridges in urban areas. The Type 9 railing was effective both in a crash test and on the highway. It became a standard design and was used extensively for several years. On some structures, a smaller tube rail was added 12 inches above the top of the Type 9 railing to provide pedestrian protection and/or to provide more assurance to motorists on high bridges. In 1967, curbed walkways were no longer allowed in front of Type 1, 8 or 9 bridge railings for reasons of cost, bridge deck space, sight distance, and aesthetics; however, the Type 11 railing, similar to a Type 9 railing, with a 60-inch minimum width pedestrian walkway was still allowed on overcrossings in urban areas.

Successful testing of the concrete median barrier with a New Jersey profile by Caltrans in 1967 led to the development of the Type 20 bridge barrier railing (Figure 2B). The Type 20 railing was like the Type 9 except the concrete parapet height was increased from 15 to 27 inches to incorporate the New Jersey profile(7). It was hoped this "safety shape" would soften small-angle impacts, which it did as shown in several crash tests. Unfortunately, this design was 39 inches high, 3 inches higher than the Type 1 railing. Shortly after, a modified Type 20 design (Figure 2B) was crash tested(8). In this version, the concrete parapet height was lowered from 27 to 20 inches and lightweight concrete was used. This barrier failed in a 4895 lb/72 mph/25° impact; it was also concluded that the top steel tube rail did more sheet metal damage to cars

ClibPDF - www.fastio.com

impacting at small angles than would occur with an all-concrete, New Jersey profile barrier.

At the conclusion of that test series, the Office of Structures Design decided to adopt the Type 25 bridge barrier railing (Figure 3) as a standard design, superseding all previous standards except in a few locations where the Type 8 self-cleaning deck was needed. The Type 25 is an all-concrete, New Jersey profile barrier, 32 inches high. It was selected because it was lower than the Type 20 railing and less expensive. Crash testing was not required because of the extensive previous testing of bridge railings with concrete parapets having similar steel reinforcement and testing of New Jersey profile median barriers. Therefore, the Type 20 railing was installed on very few structures. The Type 25 became a standard design in 1973 and has been used extensively ever since.

The Type 15 railing (Figure 2B) was developed for narrow (32 ft) secondary road bridges in rural areas. It was crash tested at angles of impact of 15° (rather than 25°) because of its intended use on narrow bridges(9). The crash tests were satisfactory and the design was used for a few years. Then the Federal Highway Administration ruled that it must either meet AASHTO static load design requirements or be crash tested at impact angles of 25°. At that time, the Office of Structures designed the Type 115 railing (Figure 3) to replace the Type 15 railing. The Type 115 railing meets the AASHTO static load design method, but has never been crash tested.

In summary, several factors have influenced the designs of the bridge barrier railings described above including strength, self-cleaning ability, visibility through and

ClibPDF - www.fastio.com

over the railing, cost, aesthetics, dynamic performance, substantial appearance, etc. Not all qualities can be maximized in one design. At the present time, the Type 25 railing seems to be one optimal design. The Type 18 see-through railing is another attempt to provide a design that includes as many desirable features as possible.

It may be of interest to note that in the AASHTO "Guide for Selecting, Locating, and Designing Traffic Barriers"(10), published in 1977, three of the five "operational" systems originated in California, the Type 9, 15 and 25. Also, one of the three "experimental" designs was from California, the Type 20. Hence, in general, the California designs have represented the state of the art for bridge barrier railings intended to contain passenger cars.

Since the mid 70s, FHWA has funded research at other agencies on high performance barriers that will contain buses and trucks. Some of these barriers have been successful in heavy vehicle crash tests; however, there have been few installations because of the high cost of the barriers, and the lack of a compelling need.

In addition to analyzing past Caltrans designs, the researchers reviewed the testing done by other agencies in recent years. None of these designs met our current requirements for a see-through railing for the following reasons:

1. The "collapsing ring" barrier suitable for heavy vehicles that was tested at the Southwest Research Institute (SWRI) has not been checked with an 1800-lb car and is too expensive for general use(11,12).

ClibPDF - www.fastio.com

2. The Texas T202 barrier tested at the Texas Transportation Institute (TTI) caused snagging when impacted by an 1800-lb vehicle, is not open enough, and includes an aluminum rail on top of the concrete parapet. Caltrans has avoided the use of aluminum in longitudinal barriers in recent years because of its general lack of ductility under dynamic loads and its high cost(13).

3. New York State tested box-beam barriers but they were used to retrofit discontinuous-panel railings mounted on raised sidewalks and would not be appropriate for use as a replacement or new railing in California(14).

4. SWRI did a comprehensive series of tests on bridge barrier railings, but these also were retrofit railings and not applicable for our purposes. They included tubular thrie beam, aluminum rail, and concrete structures mounted in front of existing railings(15).

5. TTI modified the Indiana Type 5A railing with the addition of the Magnode Tru-Beam. It peformed satisfactorily with an 1800-lb vehicle, but it was aluminum and did not include other features such as some energy absorbing capability desired by our designers(16).

6. TTI conducted over 20 crash tests on five standard bridge railing designs of several states plus 9 tests on an instrumented vertical concrete wall (results unpublished). Most of the railings did poorly; snagging occurred on four designs. Four designs used aluminum components. Despite the lack of successful barrier tests, a great deal of useful information was generated. Several findings from that study were used in designing the Caltrans see-through railing as discussed in Section 5.1.2, Bridge Rail Design.

ClibPDF - www.fastio.com

Because of regular contacts with most agencies which conduct crash tests on bridge railings, the researchers believe they have knowledge of all recent pertinent studies. Therefore, a formal literature search was not made. It was concluded that there were no economical see-through bridge barrier railing designs available that met Caltrans criteria and that had been tested successfully under the requirements of NCHRP Report 230.

1.3 Objectives - Scope

The objective of this research was to design and crash test a bridge barrier railing that would:

- Contain 1800-4500-lb passenger cars traveling 60 mph and having impact angles of 15-25° and redirect them in a smooth controlled manner.

- Partially absorb the energy of the impacting cars with collapsing steel rings mounted between the posts and the rail that would minimize the car accelerations.

- Include a large area of open space between rails and deck to block as little of the scenic view of the traveling public as possible, and to maximize visibility on horizontal and vertical curves.

- Omit any rails, curbs or parapets at deck level so that the deck would be self-cleaning during sandstorms, and so that snowplows could push snow off the deck under the bottom rail.

- Have the height and strength to handle light to moderate impacts by buses and trucks.

ClibPDF - www.fastio.com

It was planned to do the two basic "length-of-need" crash tests, Tests 10 and 12, described in NCHRP Report 230(1). Additional tests would be conducted on a modified barrier if the first two tests were unsatisfactory.

ClibPDF - www.fastio.com

2. CONCLUSIONS

The Metal Railing (Tubular) Type 18, a new "see-through" bridge rail design, was subjected to two vehicle impact tests. In Test 411, an 1850-lb Honda Civic impacted the test barrier at a speed of 59.7 mph and an angle of 12°. In Test 412, a 4530-lb Ford LTD impacted at a speed of 60.7 mph and an angle of 23°.

It was concluded as a result of these tests that:

1. This bridge rail met all the requirements for structural adequacy, occupant risk, and vehicle trajectory in NCHRP Report 230(1).

2. Although the impact angles of 12° and 23° were slightly lower than the intended angles of 15° and 25°, there would be no significant change in the results had the tests been conducted at the larger angles.

3. Vehicle behavior and redirection were very smooth during the impacts. Roll, pitch, yaw and exit angles were all small, much smaller than comparable tests conducted previously on New Jersey type concrete barriers.

4. The energy absorbing steel pipe rings mounted between the 3x12 tube rail and the posts collapsed nearly as designed and contributed to the smooth redirection of the test cars and their relatively low values of acceleration.

ClibPDF - www.fastio.com

5. The 36-inch high Type 18 metal tube bridge rail has considerably more open area than the 32-inch high Type 25 concrete bridge barrier. Comparing the open space in a vertical plane from deck level to 36 inches high, the Type 18 has 55% open space vs 11% for the Type 25. The open area of the Type 18 rail cannot be increased much further because of vehicle impact strength requirements.

6. With the exception of 8-inch wide posts located at 8'-0" intervals along the edge of deck, there were no obstructions at the edge to prevent the deck from being self-cleaning during sandstorms. This open area also may ease snow removal. No lab testing was done to verify these properties.

7. There was some reserve strength in the bridge rail after the heavy car test. Thus, the barrier should be strong enough to contain heavier vehicles during light to moderate impacts.

8. The Type 18 bridge rail is better designed to prevent lightweight cars with their small wheels from passing beneath the rail and snagging on the posts than the Type 8 or Type 115 bridge rails now in use.

ClibPDF - www.fastio.com

3. RECOMMENDATIONS

1. The Metal Railing (Tubular) Type 18 may be allowed as an alternate design for the Concrete Barrier Type 25.

2. When a metal tube bridge rail is needed, the Type 18 should be used in preference to the Type 8 or Type 115 bridge rails.

3. The Type 18 rail should be used first on a trial basis and subjected to an in-service evaluation as outlined in Chapter 3 of NCHRP Report 230(1).

ClibPDF - www.fastio.com

4. IMPLEMENTATION

The Office of Structures Design will be responsible for the preparation of standard plans and specifications for the Metal Railing (Tubular) Type 18 with technical support from the Transportation Laboratory and the Division of Traffic Engineering. Similarly, the Office of Structures Design will be responsible for the in-service evaluation with assistance from the Division of Traffic Engineering and the Transporation Laboratory.

ClibPDF - www.fastio.com

5. TECHNICAL DISCUSSION

5.1 Test Conditions

5.1.1 Test Facilities

All the crash tests were conducted at the Caltrans Dynamic Test Facility in Bryte, California, near Sacramento. The test area is a large, flat, asphalt concrete surface. A simulated concrete bridge deck was constructed flush with the pavement. There are no obstructions nearby except for a 5- to 6-foot high earth berm 90 feet downstream from the test barrier.

5.1.2 Bridge Rail Design

The bridge rail was designed by the Transportation Laboratory and the Office of Structures Design. Figures 4, 5 and 6 show several views of the test barrier. The test barrier plans are contained on Figures E1 and E2 in Appendix E. Following is a list of the key components of the bridge rail and the material specifications:

Item	Specification
Main rail - 3x12 structural steel tube	ASTM A500 Grade B
Top rail and blocks - 4x4 structural steel tube	ASTM A500 Grade B

ClibPDF - www.fastio.com

FIGURE 4

TEST BARRIER

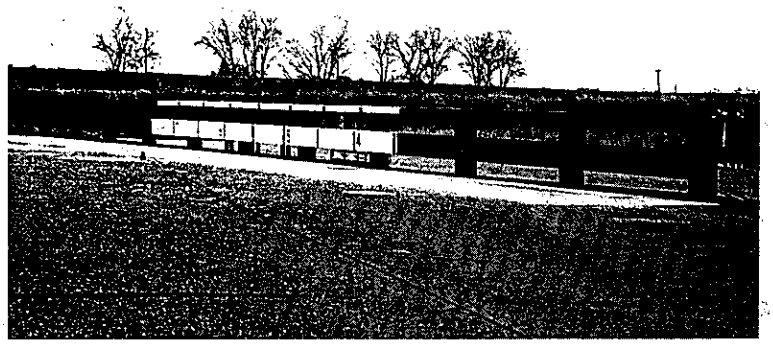

W8x31 Posts
@ 8'-0"

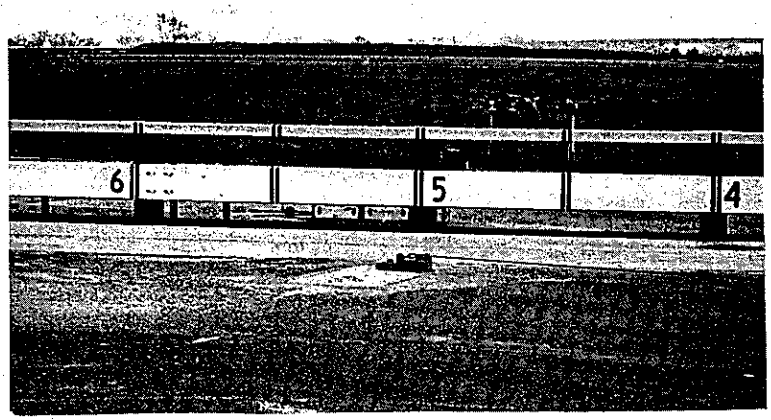

4"x4"x1/4" Top Rail
Top of Rail Height = 36"

3"x12"x1/4" Bottom Rail
Top of Rail Height = 22"

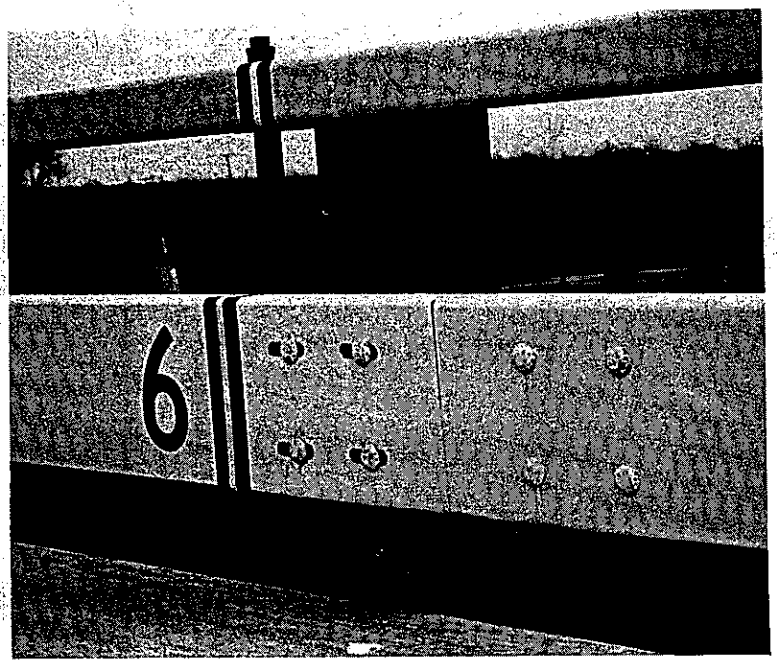

Expansion Joint Splice
in 3"x12" Rail

ClibPDF - www.fastio.com

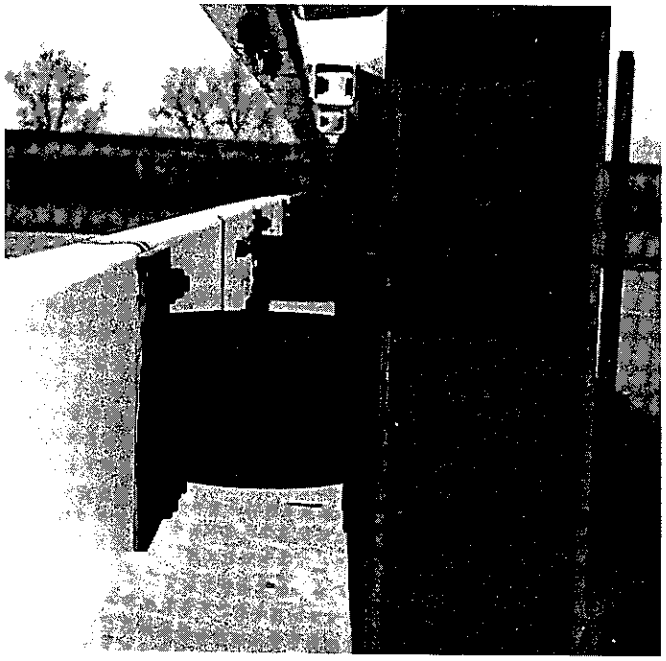

FIGURE 5

TEST BARRIER

Steel Pipe Rings
8" Dia. x 6" High x 3/16"
Mounted Between Posts and
3"x12" Rail.

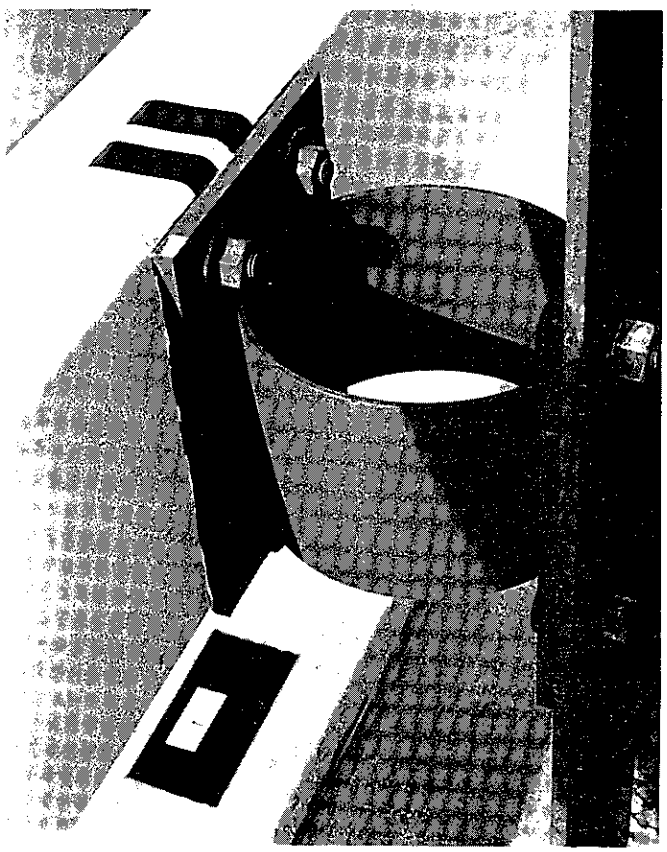

8" Dia. Pipe Welded to 1/2" Plates
3/4" Dia. x 1 1/2" Studs Welded to
3"x12" Tube.

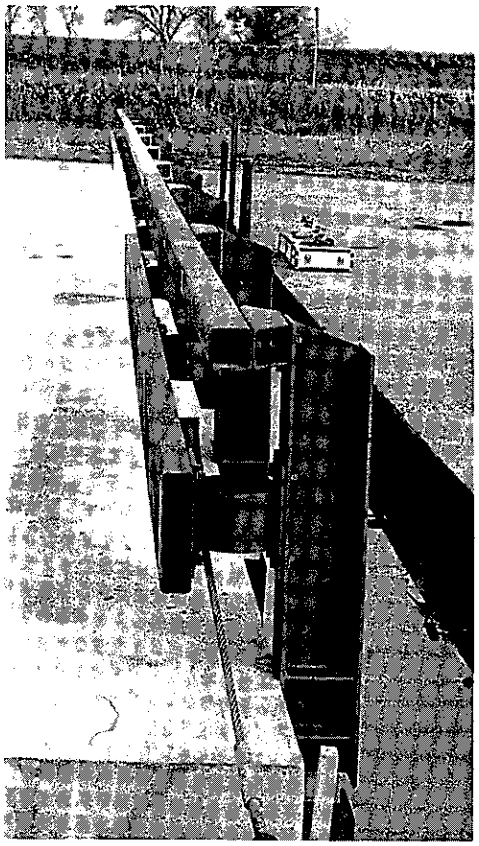

Posts Connected to Threaded
Rods Embedded in End of 12"
Thick Cantilevered Deck.

ClibPDF - www.fastio.com

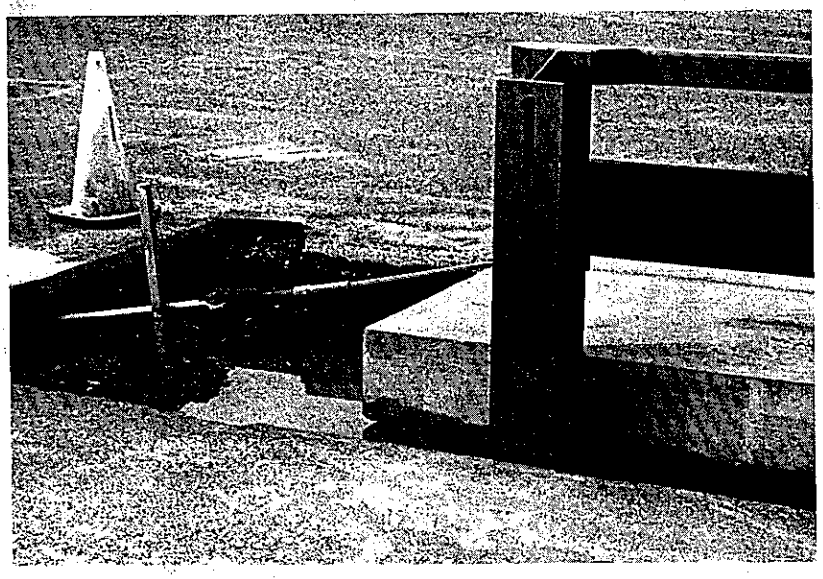

FIGURE 6

TEST BARRIER

Cable End Anchorage

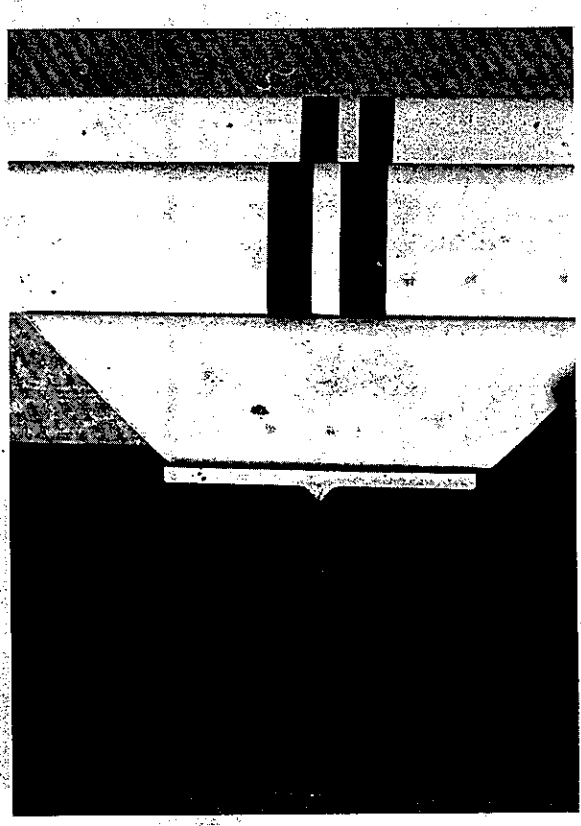

Top to Bottom: 3"x12" Tube, 4"x4" Tube, 4"x4" Blockout Block, W8x31 Post - Top View.

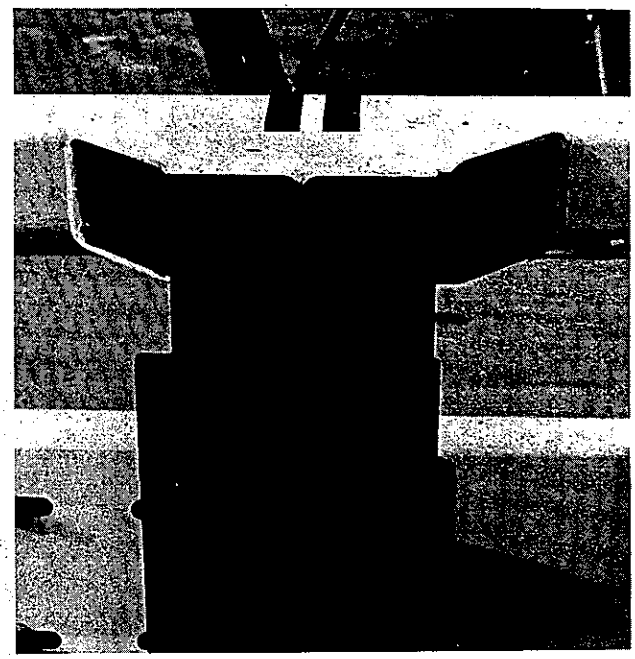

4"x4" Blockout Block Beveled to Allow Easier Tightening of Nuts on Stud Bolts - Back View.

ClibPDF - www.fastio.com

Energy absorbing blocks for 3x12 rail - 8-inch diameter steel pipe, 6 inches high, 3/16" walls welded to 1/2-inch steel mounting plates	ASTM A53 Grade A (pipe) ASTM A36 (plates)
Posts spaced at 8'-0" - W8x31	ASTM A36
Connectors on steel tubes - 3/4-inch diameter x 1 1/2-inch long welded steel stud bolts	ASTM A108
Anchor rods in deck - 1 1/4-inch diameter x 2'-0" long (top) and 1-inch diameter x 2'-0" long (bottom)	AISI C1018
High strength bolts, nuts and washers - 3/4-inch diameter	ASTM A325

Steel rails and posts were used to minimize the rail area obstructing the vision of motorists. Structural steel concentrates strength in a small area of material. The 3x12 tube rail was needed to provide a broad impact surface for vehicles of varying height. It was placed with the bottom edge 10 inches above the deck to prevent small wheels (on front wheel drive cars especially) from collapsing under the rail and snagging on the posts. With a top height of 22 inches above the deck, the 3x12 rail should prevent larger wheeled vehicles from climbing over the rail. The 3x12 rail was expected to have sufficient bending strength in the lateral direction to prevent pocketing of the rail during 4500 lb/60 mph/25° impacts. The tube shape is a

ClibPDF - www.fastio.com

smooth streamlined rail which may be more pleasing to view than other steel shapes. The face of the 3x12 rail projects out 11 5/8 inches from the edge of deck compared with the Type 25 barrier which uses 21 inches of the edge of deck.

The 4x4 tube rail was set with the top edge 36 inches above the deck. Thus, it serves as an outrigger of sorts to try to prevent vehicles with high centers of gravity, such as school buses, from rolling over the rail. It was blocked out from the posts with short pieces of 4x4 tube rail to minimize snagging on the post by vehicle components that protruded through the space between the 3x12 rail and 4x4 rail. The 4x4 blocks were stiffer than the collapsing pipe rings to inhibit roll of high center of gravity vehicles toward the barrier.

The W8x31 posts and the anchor rods embedded in the end of the deck were the same size and spacing as those used in the Caltrans Type 115 bridge rail (Figure 3). They meet the current AASHTO bridge rail static load design requirements.

Collapsing rings were placed between the posts and the 3x12 tube rail to absorb some energy from the impact and provide a controlled deflection which, it was hoped, would minimize vehicle accelerations. The ring size was based on expressions in References 17 and 18, and on crash tests reported in References 11, 12 and 15. In the referenced crash tests, 11 to 16% of the "lateral" kinetic energy of the vehicle was used up in crushing the rings [calculated using the lateral component of velocity in the formula for kinetic $energy_{lat} = 1/2\ m\ (v \sin A)^2$]. In those tests one to two rings were crushed fully in a 4500 lb/60 mph/25° impact.

ClibPDF - www.fastio.com

The rings in the see-through bridge rail were sized "softer" so that one ring would collapse totally during an 1800 lb/60 mph/15° impact. Based on the calculations, the ring would have been about 6 1/2 inches high with a wall thickness of 1/8 inch. An 8-inch diameter ring was arbitrarily chosen to provide deflection distance without adding too much bridge deck width. The thinnest wall thickness readily available for 8-inch pipe was 3/16 inch, thicker than the 1/8 inch calculated. It was decided to leave the ring 6 inches high (rather than shorten it due to the greater wall thickness) so the 3x12 rail would be more stable and less likely to rotate during impact. Also, it was acknowledged that the calculations were rough and based on a number of assumptions. Hence, the pipe used for the tests was 8 inches in diameter by 6 inches high with a 3/16-inch wall thickness.

A mild steel, AISI C1018, was used in the embedded anchor rods because they were readily available to the contractor. For the final design, it would be preferable to use ASTM A449 to maintain tighter control on the strength of the steel. The C1018 rods sampled had strengths somewhat higher than their expected minimum ultimate strengths.

Although hardened washers were used with the high strength bolts, they barely spanned the slotted holes in the posts. There was no need for the washers to be hardened; therefore, it would be preferable to use larger diameter mild steel washers in the final design.

5.1.3 Test Barrier Construction

Two contracts were let to build the test barrier. One contract was for the simulated concrete bridge deck; the

ClibPDF - www.fastio.com

second was for the steel bridge railing which was bolted to the edge of the deck. The as-built plans for the deck and railing are shown in Figures E1 and E2.

The concrete deck was a block of reinforced concrete 84'-0" long and 3-'6" wide by 3'-0" deep with a cantilevered section the length of the deck that was 3'-6" wide and 1'-0" thick. Hence the deck surface was 7'-0" wide by 84'-0" long. The concrete was designed for a compressive strength (f'_c) of 3250 psi. Test sample strengths are listed in Figure D13, Appendix D. The cantilevered deck had steel reinforcement typical for a bridge deck, and all rebar conformed to ASTM A615, Grade 60. The deck surface was flush with the surrounding asphalt concrete pavement and had a broom finish. A water cure was used. The concrete block and the cantilevered deck were constructed with two placements of concrete.

The steel railing consisted of 10 sections, each 8'-0" long, for a total length of 80'-0". A minimum length of 75'-0" is required by NCHRP Report 230(1). Static strength results from test specimens of the rail components are tallied in Appendix D. The bridge rail components for the test barrier were not galvanized.

A steel cable (3/4-inch diameter, 6x19, IWRC) was attached to each end of the 3x12 tube rail and anchored with an 18-inch diameter by 4'-0" deep concrete footing. The rail was anchored to prevent it from translating downstream during impact in case the steel pipe rings did not have enough strength in that direction. In practice, the bridge rail would be connected to bridge approach guardrail which would be anchored at the ends.

ClibPDF - www.fastio.com

There were no notable problems during construction. The deck was formed and the concrete placed in 12 days; the bridge rail was erected in one day.

5.1.4 Test Vehicles

The test vehicles complied with NCHRP Report 230(1). For all tests, the vehicles were in good condition and free of major body damage and missing structural parts. All equipment on the vehicles was standard. The engines were front mounted. No ballast was used. Vehicle dimensions are shown in Figures A1 and A2 in Appendix A.

The vehicles were self-powered; a speed control device maintained the desired impact speed once it was reached; and the ignition was cut off just before impact. Remote braking was possible after impact. Guidance of the vehicle was achieved with an anchored cable which passed through a knockoff bracket on the left front wheel of the vehicles. No constraints were put on the steering wheel. A detailed description of the test vehicle equipment and guidance system is contained in Appendix A.

Both impacts were on the right (passenger) side of the cars.

5.1.5 Data Acquisition System

The impact phase of each crash test was recorded with several high speed movie cameras, one normal speed movie camera, one black and white sequence camera and one color slide sequence camera. All of these cameras were mounted on tripods except that three cameras were mounted on a 35-foot high tower directly over the point of impact on the

ClibPDF - www.fastio.com

test barrier, and one high speed camera was mounted in the car to record the dummy's motions. The test vehicle and test barrier were photographed before and after impact with a normal speed movie camera, a black and white still camera and a color slide camera. A film report of this project has been assembled using edited portions of the movie coverage.

Three accelerometers were attached to the floor of the vehicle at the center of gravity to measure motion in the longitudinal, lateral and vertical directions. Rate gyro transducers were also placed at this location to measure the pitch, roll and yaw of the vehicle. The accelerometer data were used in calculating the occupant impact velocity to judge the risk to occupants.

An anthropomorphic dummy with three accelerometers mounted in its head cavity was placed in the driver's seat of the test vehicle to obtain motion and acceleration data. The dummy, Willie Makit, a Part 572 dummy built to conform to Federal Motor Vehicle Safety Standards by the Sierra Engineering Company, simulates a 50th percentile American male weighing 165 lbs. The dummy was not restrained. NCHRP Report 230 calls for the dummy to be on the impact side of the car. This was not done because the passenger seat floor area was needed for test equipment and the driver's seat was needed so the test vehicle could be driven to and from the test site.

A sliding weight device was attached to the right side of the vehicle. Upon impact, the weight, fitted with ball bearings, slid two feet forward on a smooth rod. This was used as a rough check on the "rattlespace" time determined from accelerometer data which was used to calculate the

ClibPDF - www.fastio.com

occupant impact velocity. The rattlespace time is the time required for an object to move two feet forward with respect to the passenger compartment after impact.

Houston deflection potentiometers were used to measure the dynamic deflections of posts and rails during impact at several points on the barrier close to impact.

Appendices B and C contain a detailed description of the photographic and electronic equipment, the camera layout, data collection and reduction techniques, and accelerometer records.

5.2 Test Results

5.2.1 Test 411 (1850 lbs/59.7 mph/12°)

The Data Summary Sheet and photos taken before and after impact are shown in Figures 7 through 12. A film report showing Tests 411 and 412 is available for viewing.

5.2.1.1 Impact Description - Test 411

The car pulled to the right on the guidance cable as it approached the barrier. The rear half of the car pulled farther to the right than the front half which was restrained by the wheel bracket. The wheel bracket on the left front wheel of the car actually slipped off the guidance cable a few feet in front of the cable anchorage. Consequently, there was a slight reduction in the angle of impact which was about 12° instead of the intended 15°. The car contacted the barrier between posts 5 and 6, about 1.6 feet downstream from post 5 instead of at midspan as intended. The length of vehicle contact with the barrier

ClibPDF - www.fastio.com

FIGURE 7 DATA SUMMARY SHEET - TEST 411

Impact + 0.022 Sec

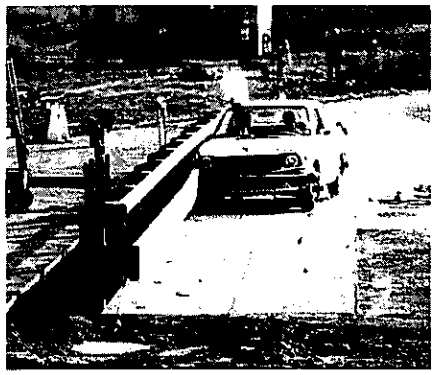

I + 0.078 Sec

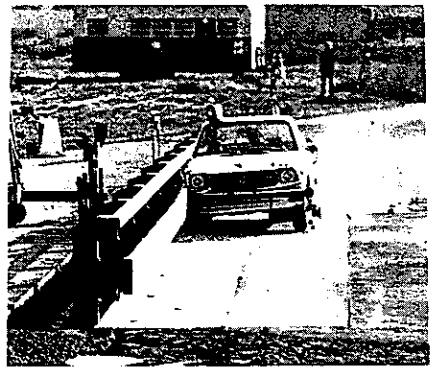

I + 0.133 Sec

I + 0.189 Sec

I + 0.301 Sec

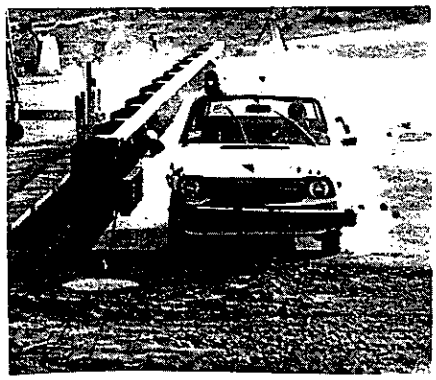

I + 0.635 Sec

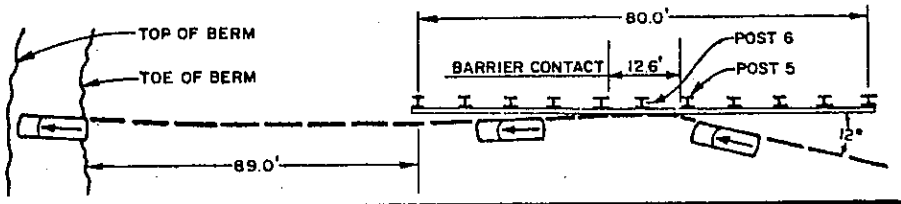

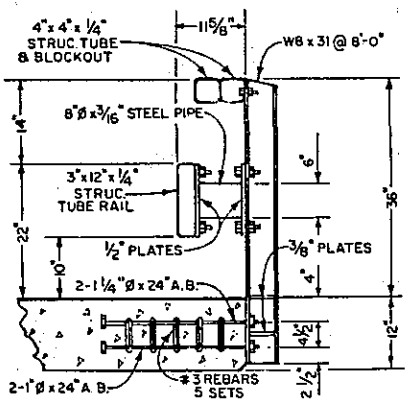

TEST DATE: December 3, 1982
TEST BARRIER: Metal Railing(Tubular)Type 18
TEST VEHICLE: 1979 Honda Civic
  Test Inertial Mass: 1850 lbs.
  Impact Speed/Angle: 59.7mph/12°
TEST DUMMY: Part 572, 165 lb.
  Position: Driver's Seat; Restraints:None
TEST RESULTS:
  Occupant Impact Velocity-Lateral:17.9fps
                -Longitudinal: 6.8fps
  Highest 50 ms.Avg.Veh.Accel-Lat: -5.0 g
                -Long: -1.6 g
  Exit Speed/Angle(Vehicle): 56mph/1°
  Max. Roll/Pitch(Vehicle): 1.25°/-1.00°
  Max. Lat. Deflection,Permanent/Dynamic:
    3x12 Rail: 2.63"/N.A.
    4x4 Rail: 0/0.75"
  HIC/TAD/VDI: 66/RD-2/2RDES1

ClibPDF - www.fastio.com

FIGURE 8 TEST 411 TEST VEHICLE AND BARRIER

Planned Impact Angle and Speed - 60 mph/15°

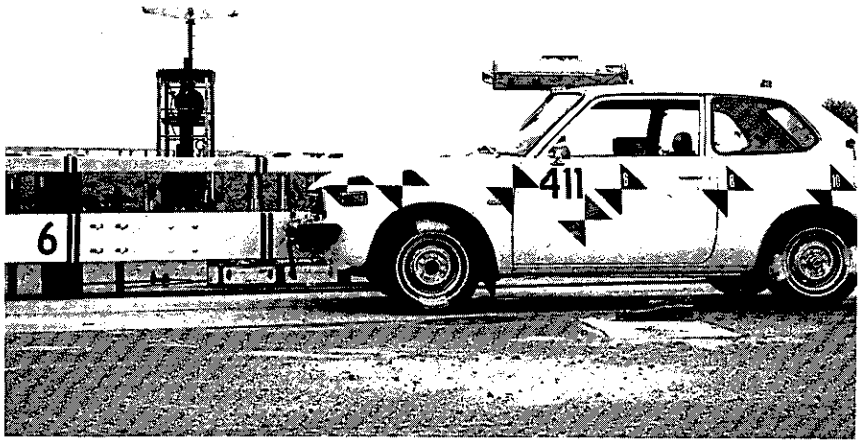

1979 Honda Civic, 1850 lb, at Planned Point of Impact - Midway Between Posts 5 and 6

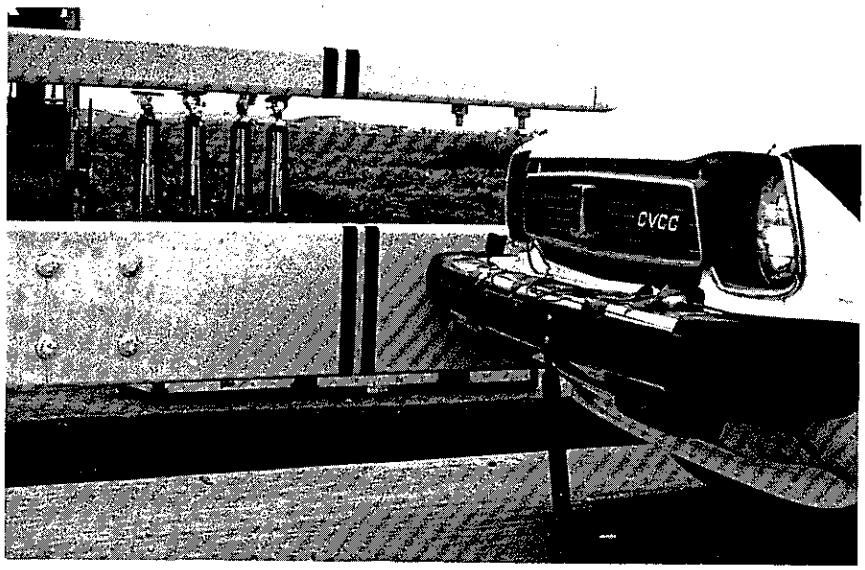

Top of 4"x4" Tube - 36" High

Top of 3"x12" Tube - 22" High

Top of Bumper - 19 1/2" High

ClibPDF - www.fastio.com

FIGURE 9 TEST 411 TEST VEHICLE AND BARRIER

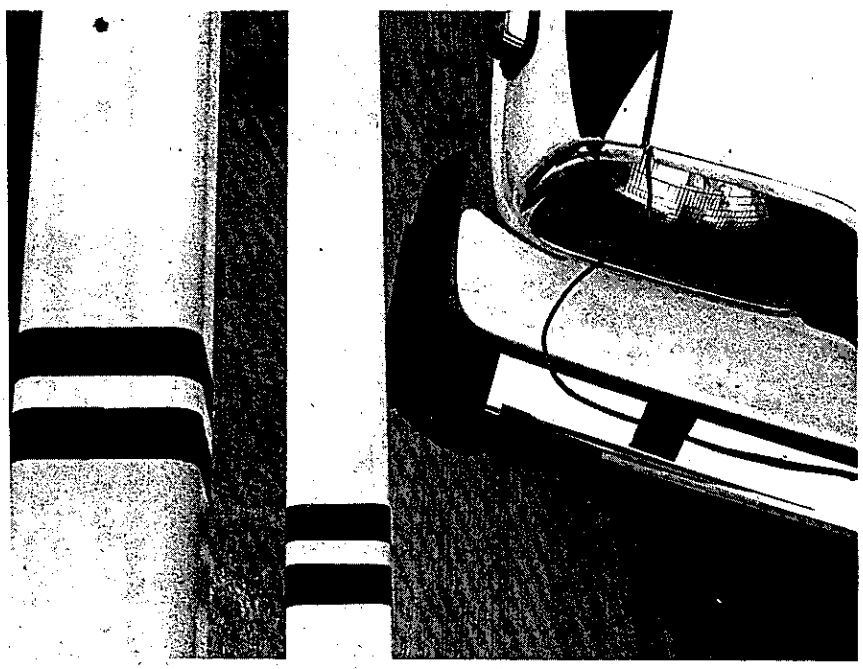

Top View - Car at 15° Angle With Test Barrier Contacting 3"x12" Tube

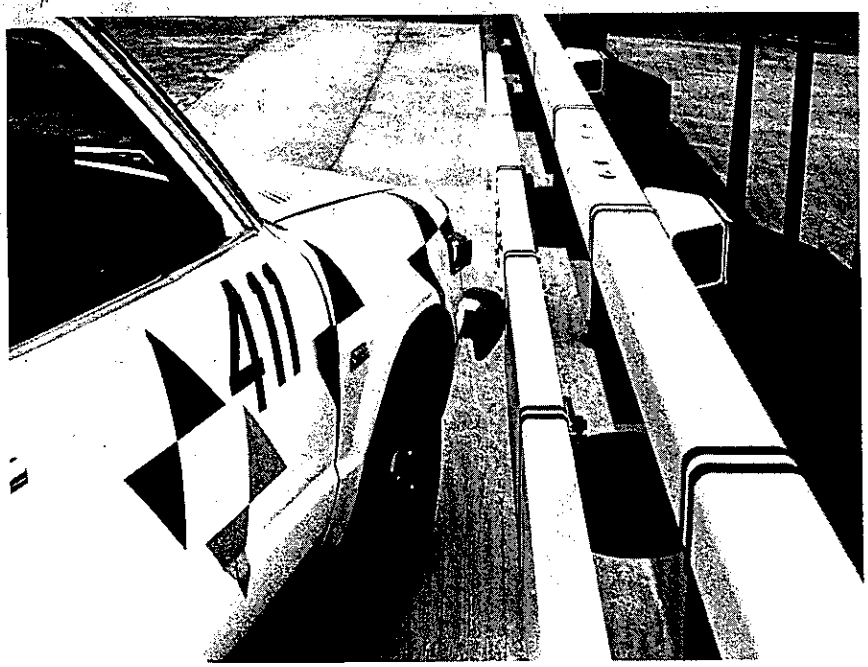

Car at 15° Angle With Test Barrier

ClibPDF - www.fastio.com

FIGURE 10 TEST 411 CRUSHED PIPE RINGS

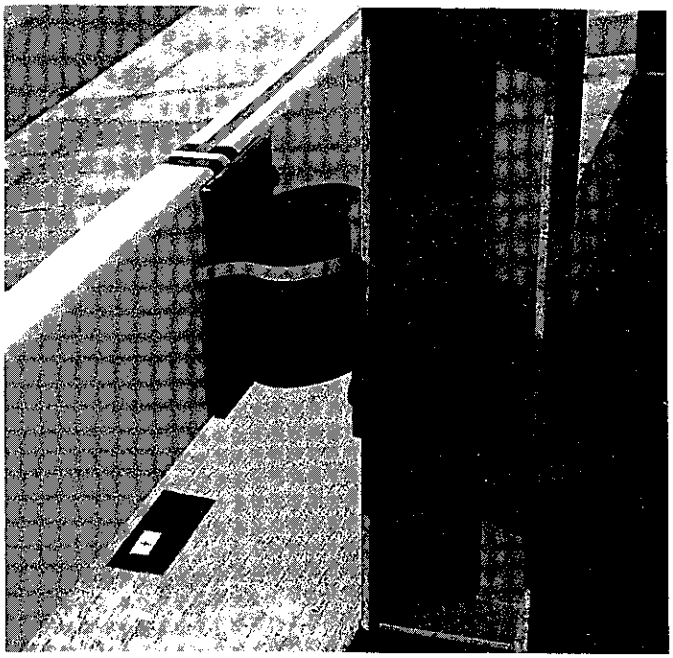

Pipe Ring Crushed 1 7/8" at Post 5

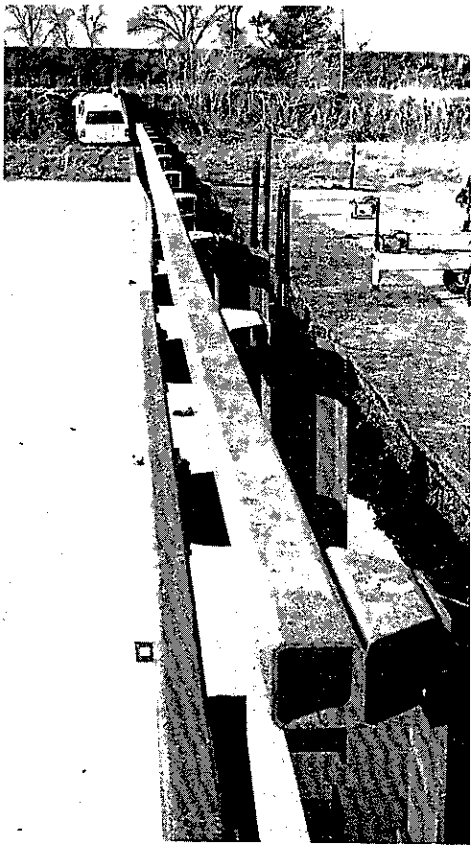

Deflection in 3"x12" Tube Rail - 2 5/8" Max; Final Location of Car on Earth Berm

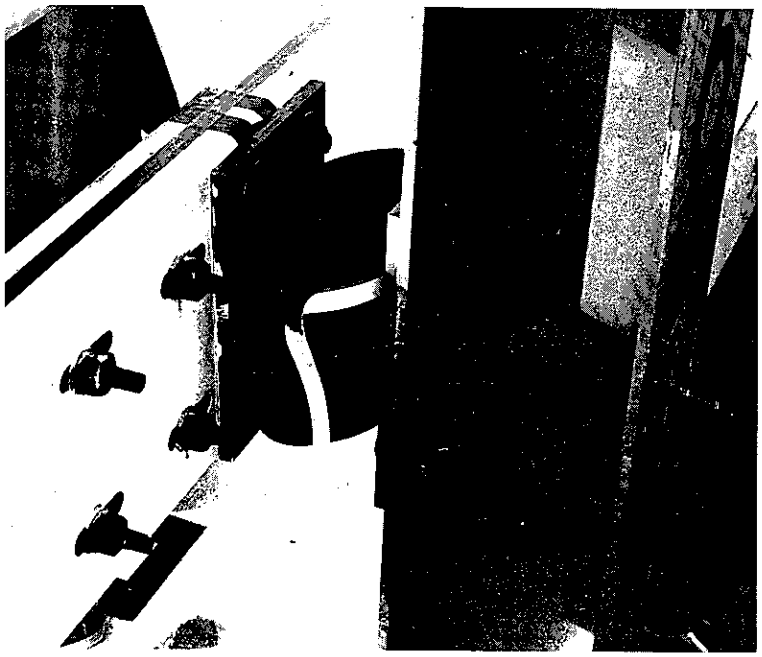

Pipe Ring Crushed 2 5/8" at Post 6

ClibPDF - www.fastio.com

FIGURE 11 TEST 411 BARRIER DAMAGE

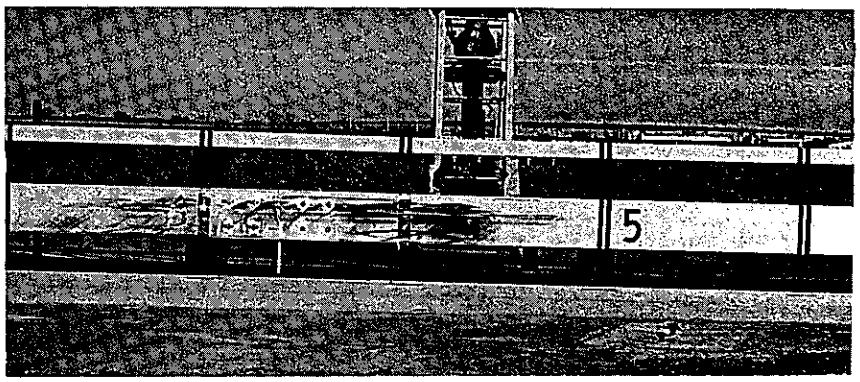

Total Length of Vehicle Contact on
3"x12" Tube - 12.6 Ft.
No Vehicle Contact With 4"x4" Tube

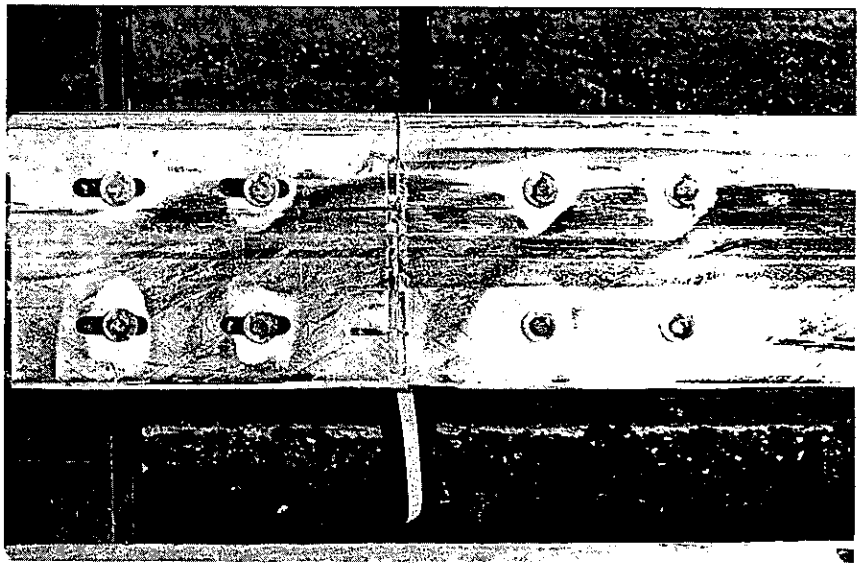

Tire Scuff Marks on 3"x12" Tube at
Expansion Joint Splice - No Movement
of Splice

ClibPDF - www.fastio.com

FIGURE 12 TEST 411 VEHICLE DAMAGE

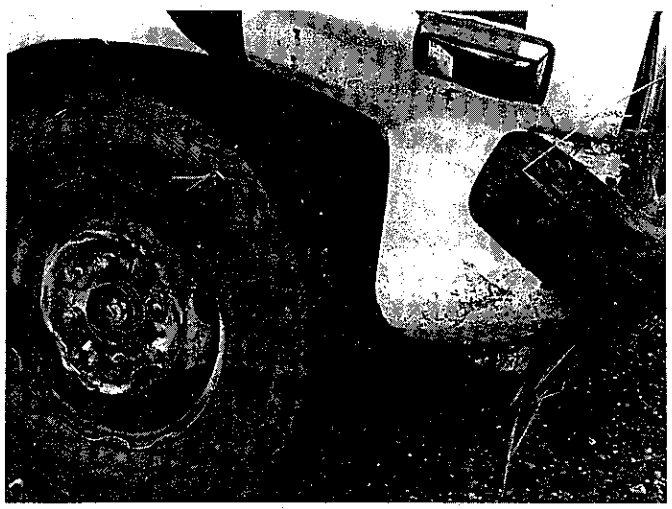

Crinkles on Rim Due to Contact With Button Heads of Bolts at Expansion Joint Splice; One Lug Bolt on Wheel Sheared Off.

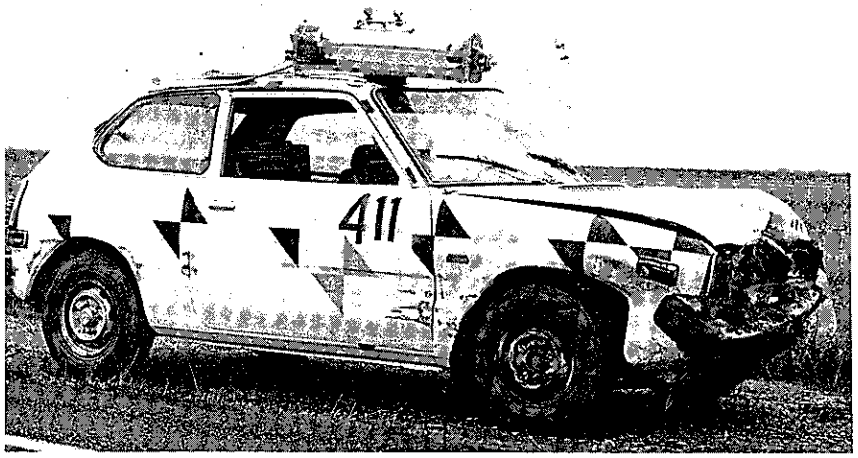

Car After Removal From Earth Berm; Front Crush All Due to Impact With Earth Berm; Light Scuffing and Denting From 3"x12" Tube Entire Length of Car.

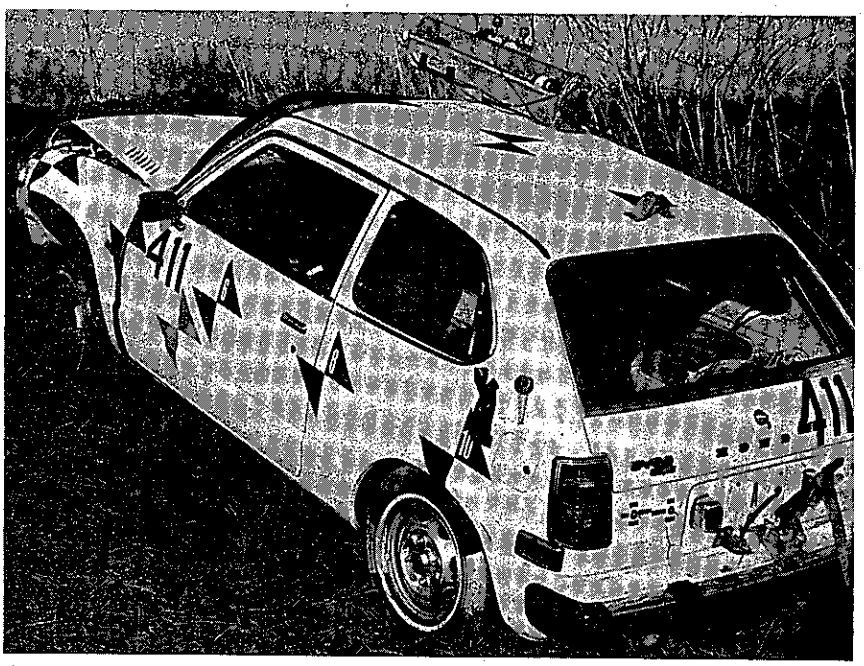

Final Location of Car on Earth Berm.

ClibPDF - www.fastio.com

was 12.6 feet. The car was smoothly redirected and lost contact with the barrier at an exit angle of 1°. The exit velocity was 56 mph. Exit velocity and angle are measured at the time after impact when the vehicle loses contact with the barrier. During barrier impact, the car experienced virtually no pitch or roll. There were no tire skid marks on the concrete deck after impact. The car continued to travel parallel to the barrier, went off the pavement near the end of the barrier and traveled across a grassy field. The brakes were applied about 100 feet beyond impact in the grassy field and had little effect on the vehicle trajectory. The car plowed into an earth berm about 90 feet beyond the barrier. It pitched up at the berm and came to rest at an upward angle on the berm. The maximum 50 millisecond average value of lateral acceleration was -5.0 g's and the comparable value of longitudinal acceleration was -1.6 g's. The occupant impact velocity was 17.9 fps in the lateral direction and 6.8 fps in the longitudinal direction.

5.2.1.2 Vehicle Damage - Test 411

Damage to the vehicle was relatively light. Immediately after impact; the bumper was forced to the left a few inches. The right side of the vehicle sustained a light crease or dent about 21 1/2 inches to 22 inches high from front to rear of the vehicle. This height coincides with the top of the 3x12 rail. The right front wheel felt much of the force of the impact and was heavily scraped. One of the four lugs sheared off and the other three were ground down. The edge of the wheel rim was crinkled and cupped at several spots where it contacted the heads of the button head bolts at the expansion joint splice in the 3x12 rail. The vehicle was free to roll and the engine could still be

ClibPDF - www.fastio.com

started a few days after the test. There was additional damage to the vehicle from its impact with the earth berm. This damage included moderate crushing of the front end and a broken windshield where the dummy struck it. There was no intrusion of vehicle or barrier parts into the passenger compartment.

5.2.1.3 Barrier Damage - Test 411

There was no vehicle contact with the upper 4x4 rail. On the 3x12 rail, scrub marks from the vehicle bumper extended for 11.3 feet, and tire scuff marks were 10.6 feet long. The bumper and tire scuff marks overlapped, and their total length was 12.6 feet. In this scuffed area there were four semicircular scrapes from tire lugs.

Measurements taken after the test showed that the permanent lateral deflections of the 3x12 rail (measured at the top of the rail) were 0.25 inch and 1.88 inches at posts 4 and 5 upstream of impact and 2.63 inches and 0.63 inch at posts 6 and 7 downstream of impact. All of this deflection was due to crushing of the steel pipe rings. Only the four partially crushed steel pipe rings and attached plates from the four posts near the point of impact needed replacement. When they were removed, the deflected portion of the 3x12 rail sprung back into a straight alignment. Although it probably was not necessary, 16'-0" of this 3x12 rail was replaced with new rail for the second test in the series. The barrier deflections are shown in Figure 13. Figure 14 shows how the deflections were measured.

Cables from Houston potentiometers were attached to the 3x12 rail to measure dynamic deflections during impact. The cables snapped off the rail during impact so dynamic

ClibPDF - www.fastio.com

TEST 411

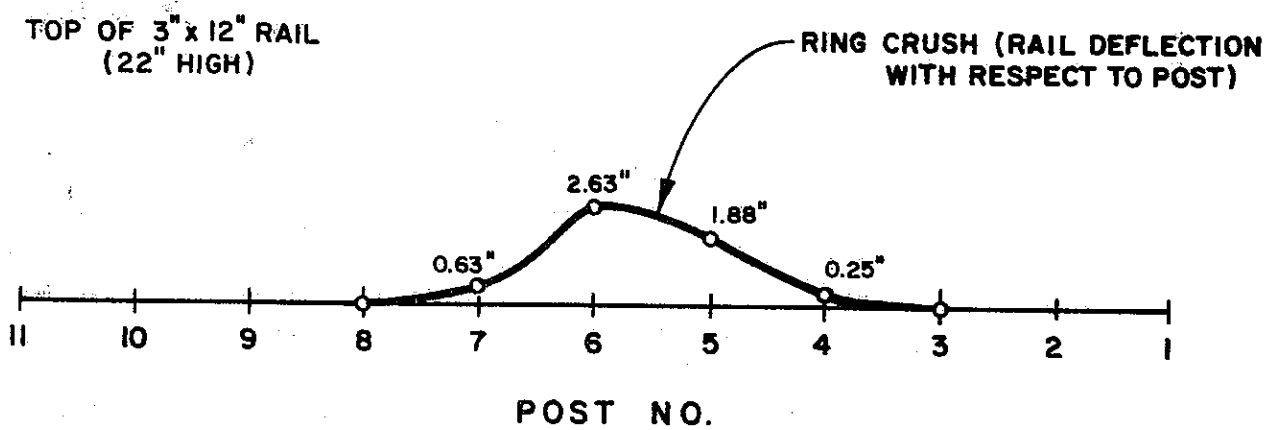

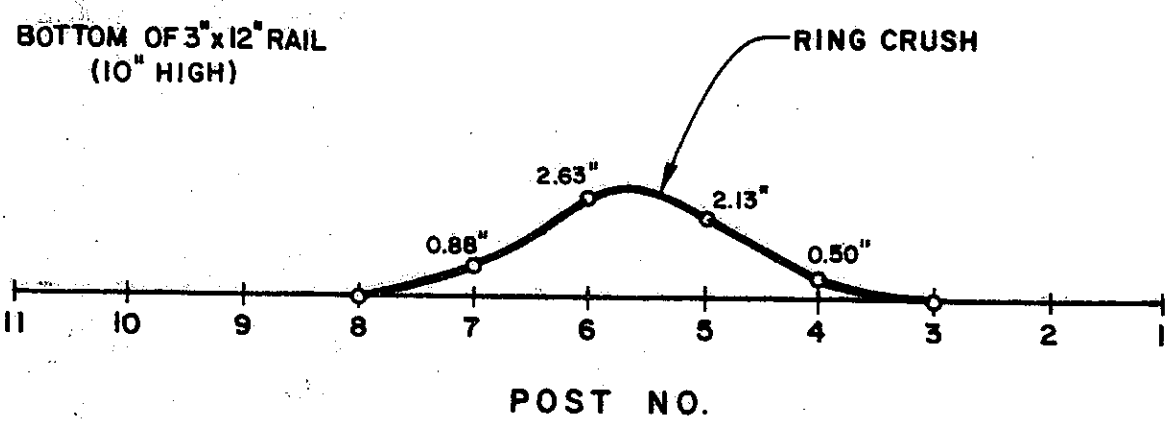

NOTE:

NO DEFLECTION OF 4"x 4" RAIL.

NO PERMANENT POST DEFLECTION.

RAIL DEFLECTION = CRUSH OF 8-IN RINGS.

FIGURE 14 SHOWS HOW DEFLECTIONS WERE MEASURED.

PERMANENT HORIZONTAL DEFLECTIONS OF 3" x 12" RAIL

FIGURE 13

ClibPDF - www.fastio.com

A = Total Deflection of Top of 4"x4" Rail

D = Total Deflection of Post at 36"

A-D=Rail Deflection w/respect to Post

B = Total Deflection of Top of 3"x12" Rail

E = Total Deflection of Post at 22"

B-E=Rail Deflection w/respect to Post=Ring Crush

C = Total Deflection of Bottom of 3"x12" Rail

F = Total Deflection of Post at 10"

C-F=Rail Deflection w/respect to Post=Ring Crush

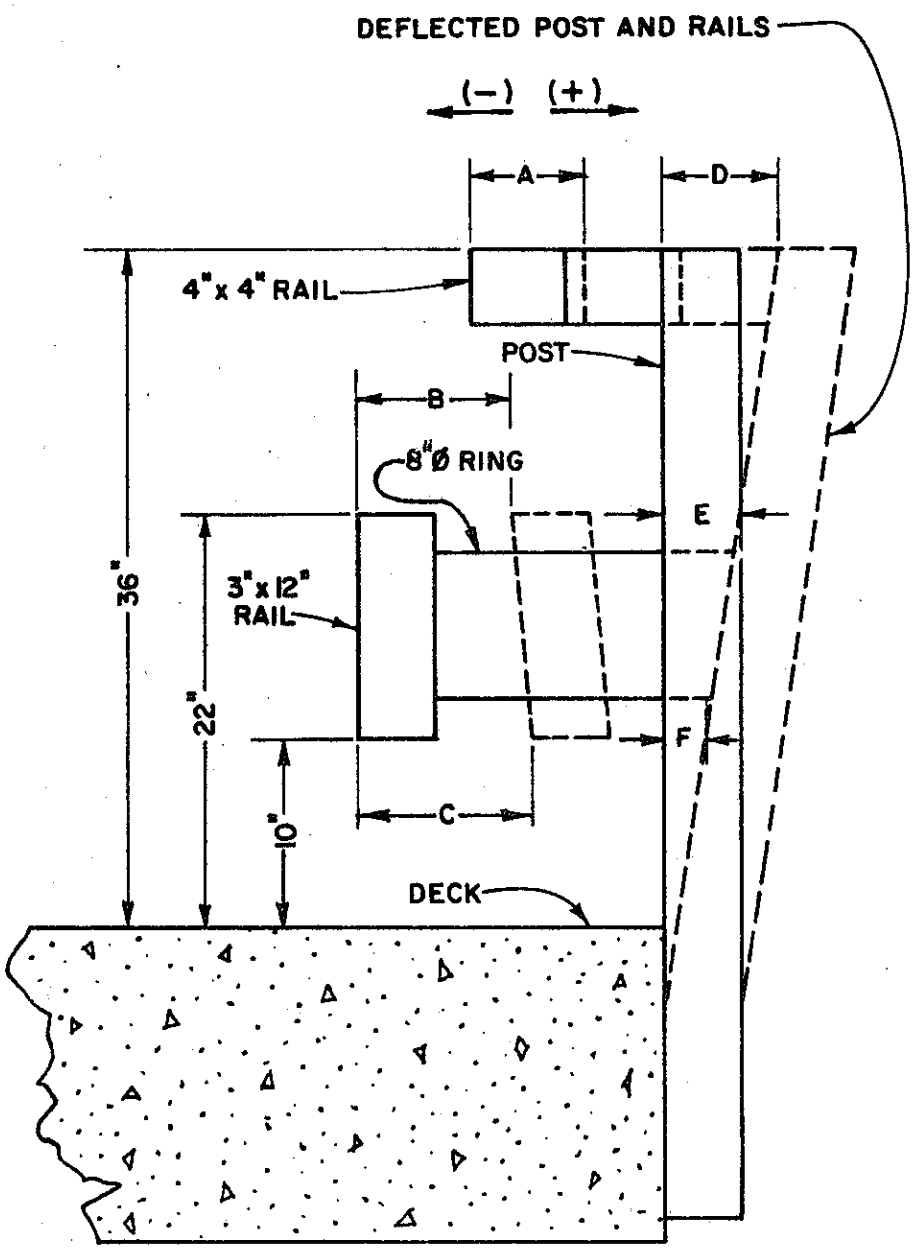

MEASUREMENTS OF HORIZONTAL DEFLECTIONS OF RAIL AND POSTS

FIGURE 14

ClibPDF - www.fastio.com

deflections were not measured. The maximum dynamic lateral deflections at the top of posts 5 and 6 were 11/16 inch and 3/4 inch.

There was no distress at the post to deck connections, or at the end anchorages for the 3x12 rail.

5.2.1.4 Dummy Response - Test 411

During impact, the unrestrained dummy flew over to the right (passenger) side of the car and broke a box housing the light for the camera. When the vehicle struck the earth berm, the dummy was thrown forcefully ahead into the windshield, breaking it and bending the steering wheel.

5.2.2 Test 412 (4530 lbs/60.7 mph/23°)

The Data summary Sheet and photos taken before and after impact are shown in Figures 15 through 20.

5.2.2.1 Impact Description - Test 412

The car bumper contacted the 3x12 rail between posts 5 and 6 about 3.0 feet downstream from post 5. The length of bumper contact with the 3x12 rail was 16.3 feet. Wheel contact with the 3x12 rail began 1.1 feet downstream from post 5 and continued for 14.8 feet.

Vehicle contact with the 4x4 rail began 2.4 feet downstream from post 5 and continued for 13.6 feet. The 3x12 rail was deflected in a long flat curve, and the vehicle was smoothly redirected. Maximum roll and pitch of the vehicle during impact were +1.2° and -0.5°. Exit velocity of the vehicle was 50 mph, and the initial exit angle was 2.5°.

ClibPDF - www.fastio.com

Impact + 0.005 Sec

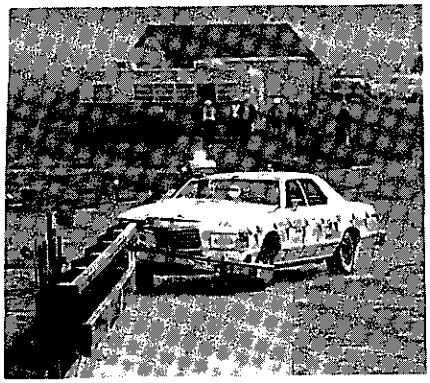

I + 0.061 Sec

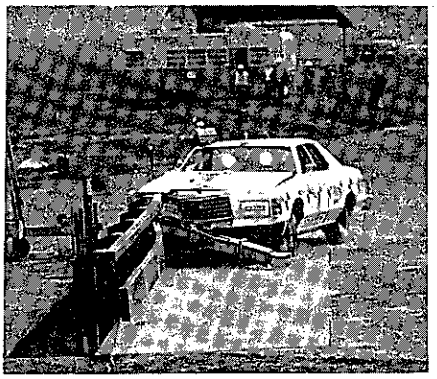

I + 0.116 Sec

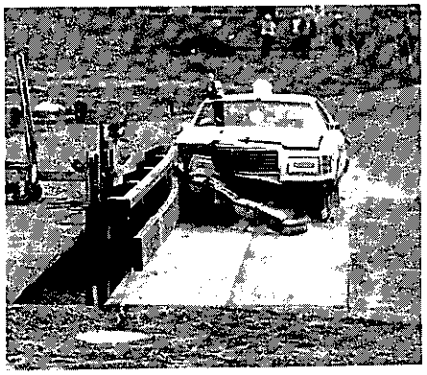

I + 0.172 Sec

I + 0.282 Sec

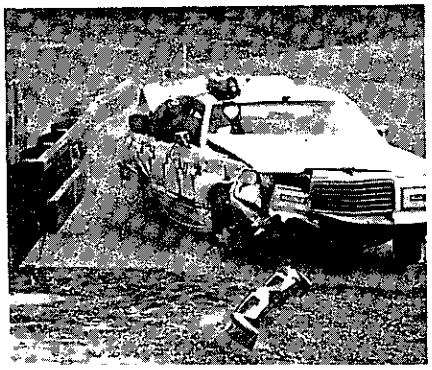

I + 0.616 Sec

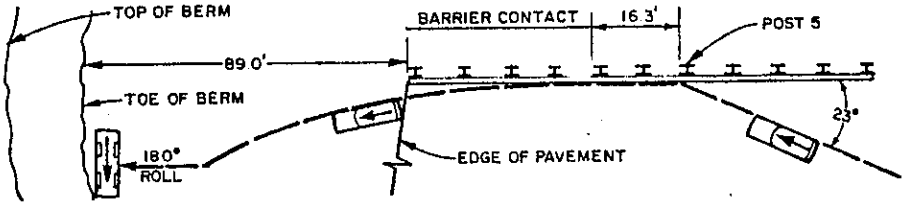

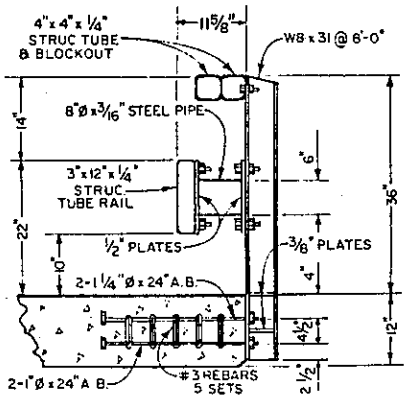

TEST DATE: January 11, 1983
TEST BARRIER: Metal Railing(Tubular)Type 18
TEST VEHICLE: 1977 Ford LTD
  Test Inertial Mass: 4530 lbs.
  Impact Speed/Angle: 60.7mph/23°
TEST DUMMY: Part 572, 165 lbs.
  Position: Driver's Seat; Restraints:None
TEST RESULTS:
  Occupant Impact Velocity- Lateral:23.5fps
                -Longitudinal:16.7fps
  Highest 50 ms.Avg.Veh.Accel-Lat: -9.5g
                -Long: -5.1g
  Exit Speed/Angle(Vehicle): 50mph/2.5°
  Max. Roll/Pitch(Vehicle): 1.2°/-0.5°
  Max. Lat. Deflection,Permanent/Dynamic:
    3x12 Rail: 7.63"/9.50"
    4x4 Rail: 3.13"/6.00"
  HIC/TAD/VDI: 228/RFQ-4/2RDEW3

ClibPDF - www.fastio.com

ClibPDF - www.fastio.com

FIGURE 16 TEST 412 TEST VEHICLE AND BARRIER

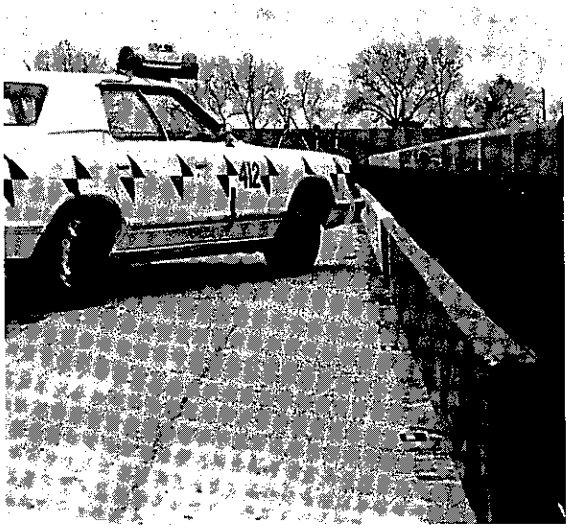

Planned Impact Angle = 25°
1977 Ford Ltd - 4530 lbs

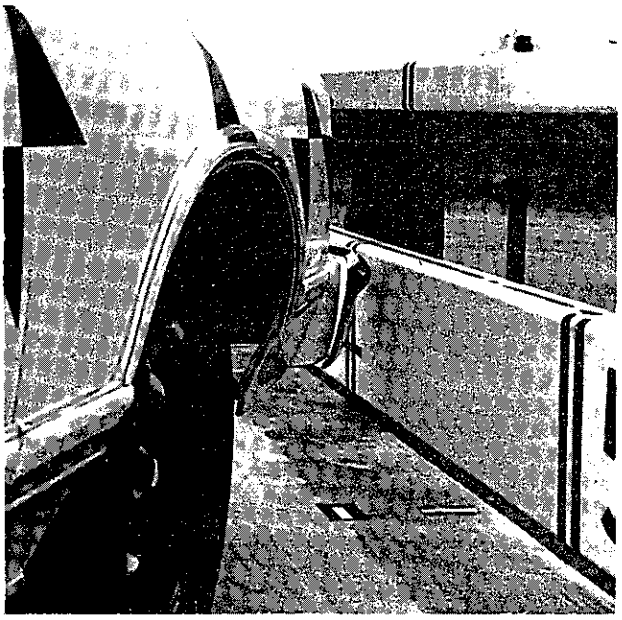

Planned Impact Speed = 60 mph

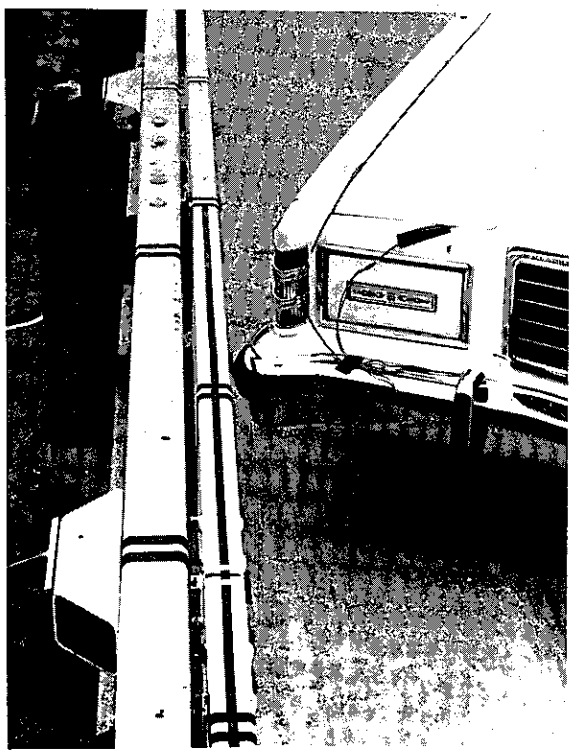

Top View - Bumper Contacting 3"x12" Tube at Planned Impact Point, Midway Between Posts 5 and 6

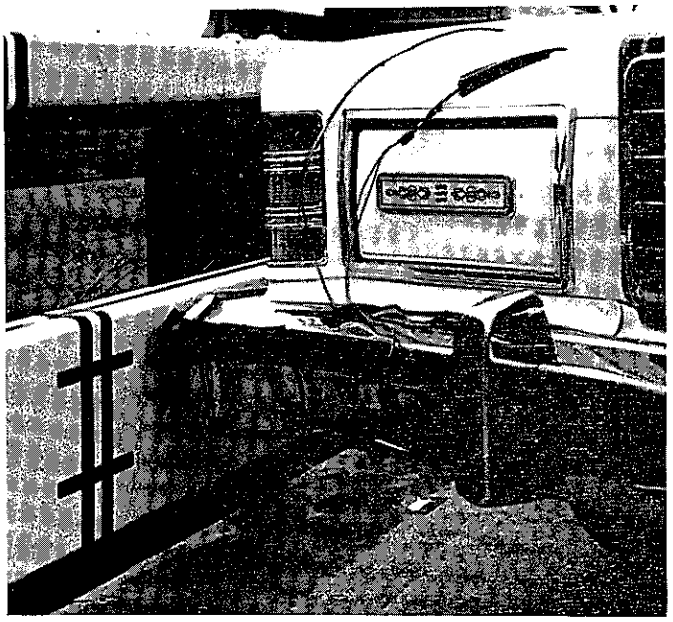

Top of 4"x4" Tube - 36" High
Top of 3"x12" Tube - 22" High
Top of Bumper - 21" High

ClibPDF - www.fastio.com

FIGURE 17 TEST 412 BARRIER DAMAGE

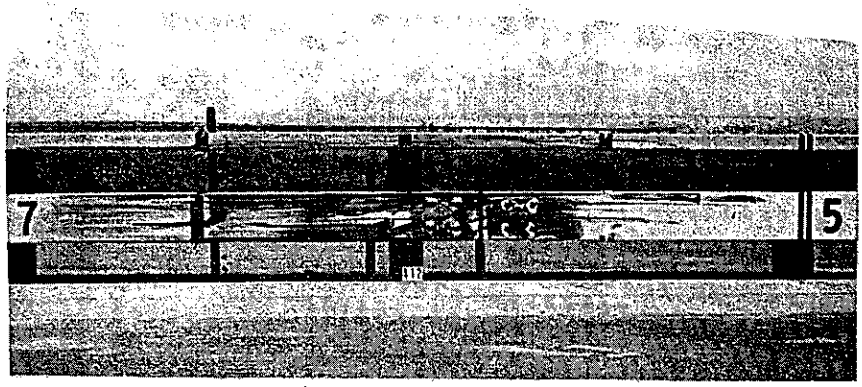

Vehicle Scuff Marks From Impact With Bridge Rail.

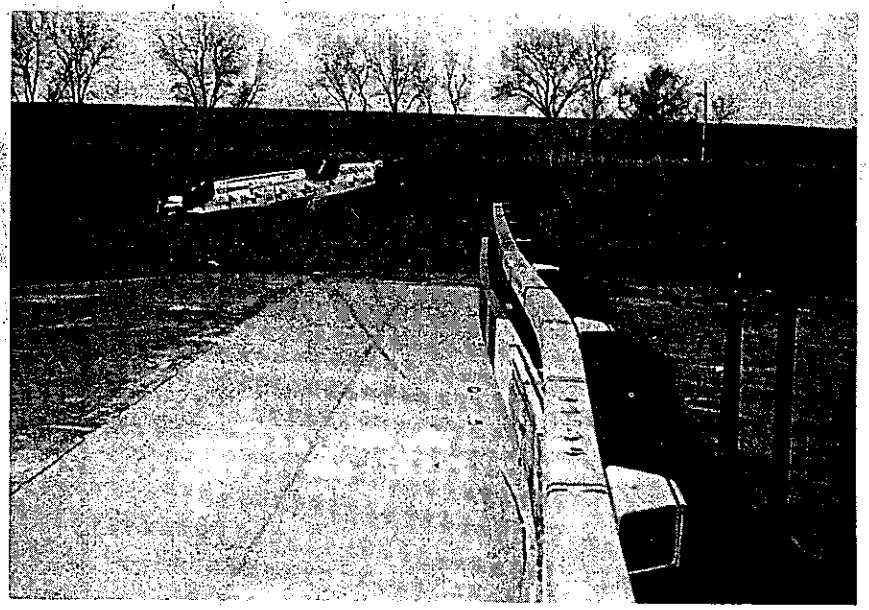

Deflected Bridge Rail and Final Location of Vehicle Which Rolled 180° After Skidding on Soft Earth.

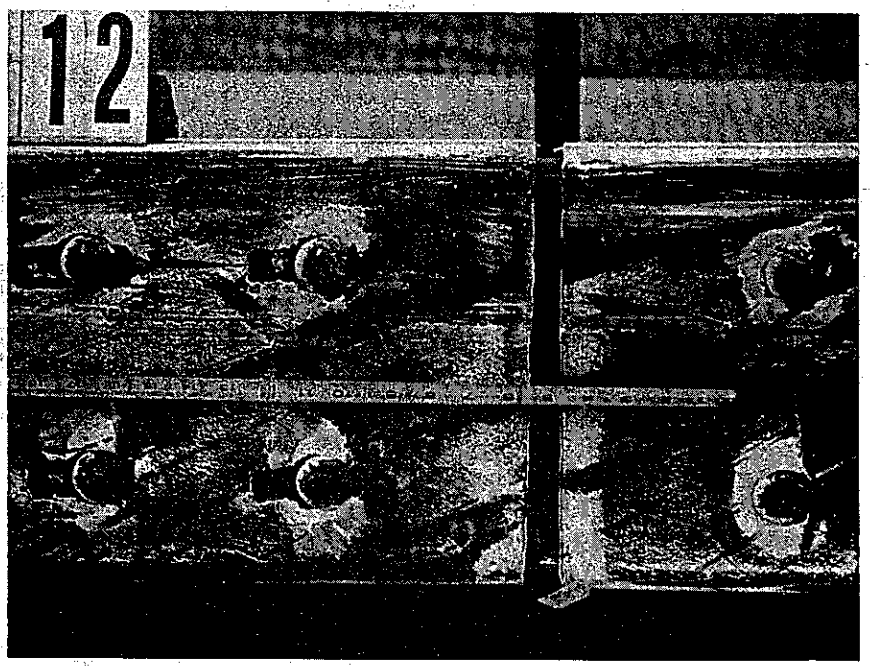

Scuff Marks on 3"x12" Tube Rail at Expansion Joint Splice. Slight Outward Movement of Rail at Splice.

ClibPDF - www.fastio.com

FIGURE 18 TEST 412 CRUSHED PIPE RINGS

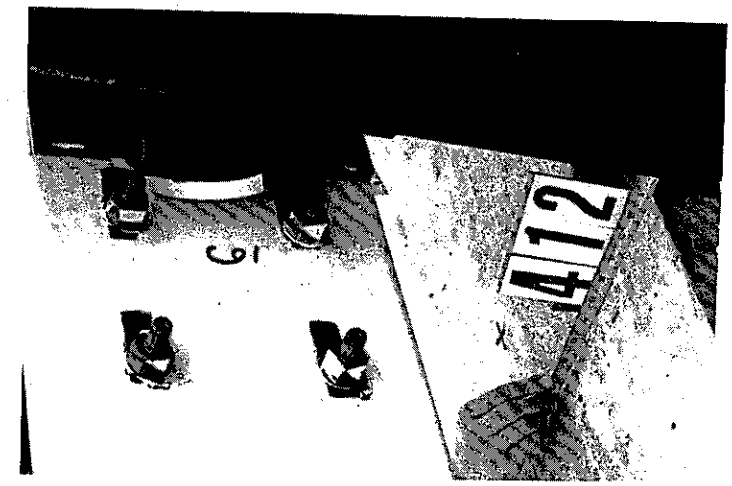

Post 6
Crush 5 9/16"
Tape Measure Shows Separation of Post Flange From Edge of Deck. This Post is Adjacent to Expansion Joint Splice.

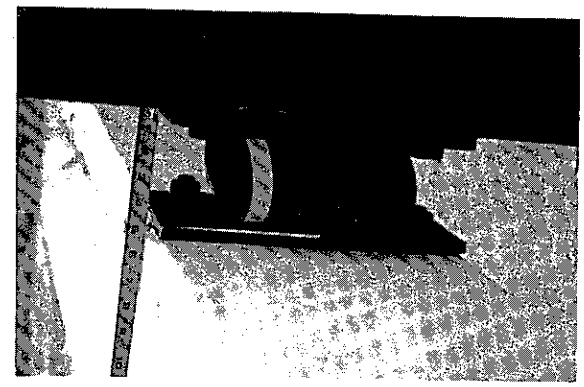

Post 5
Crush 4 11/16"

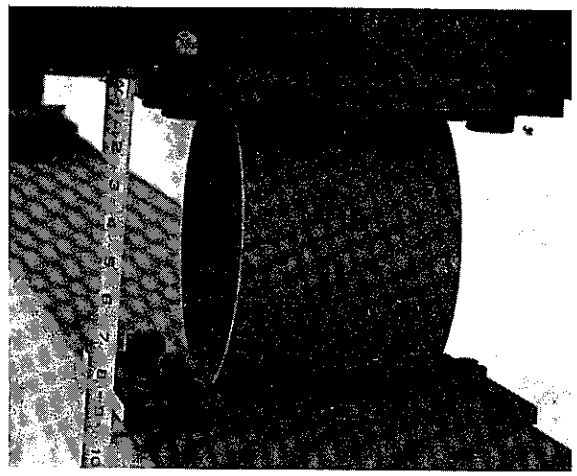

Post 9
Crush 1/4"

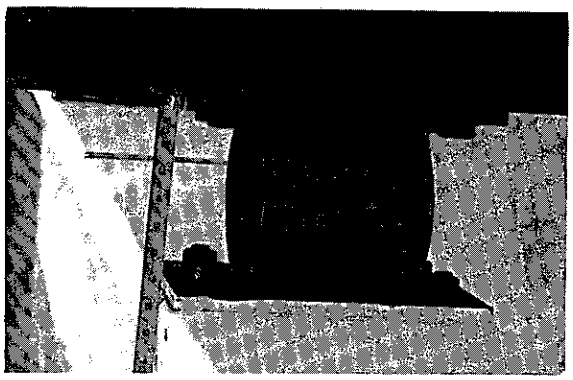

Post 4
Crush 1 13/16"

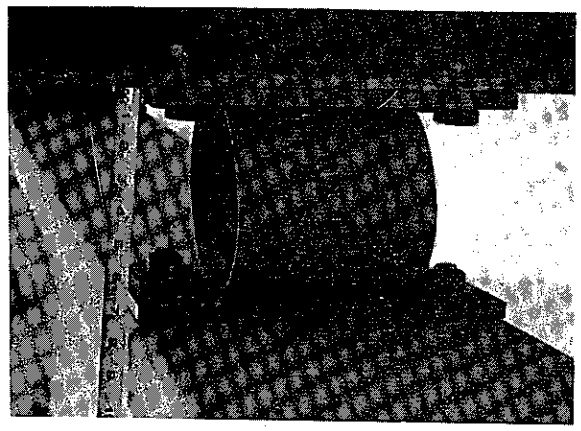

Post 8
Crush 2"

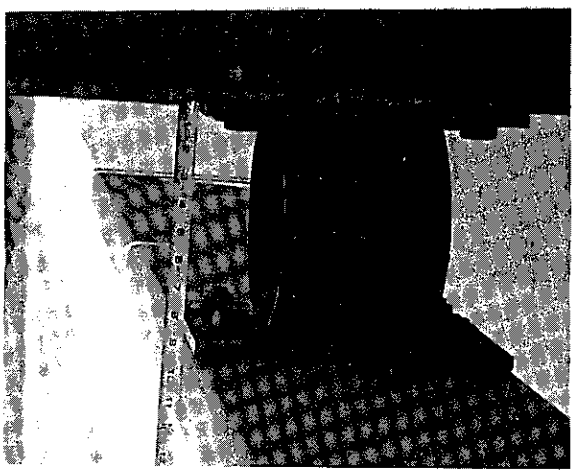

Post 3
Crush 1/4"

Post 7
Crush 4 3/4"

ClibPDF - www.fastio.com

FIGURE 19 TEST 412 VEHICLE DAMAGE

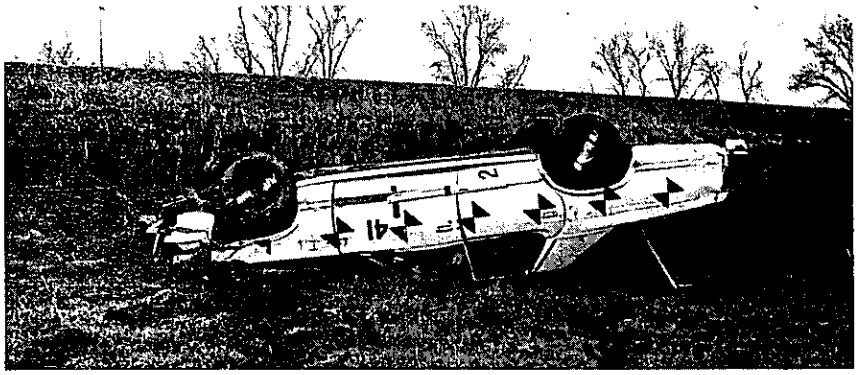

Final Location of Vehicle After Impact.

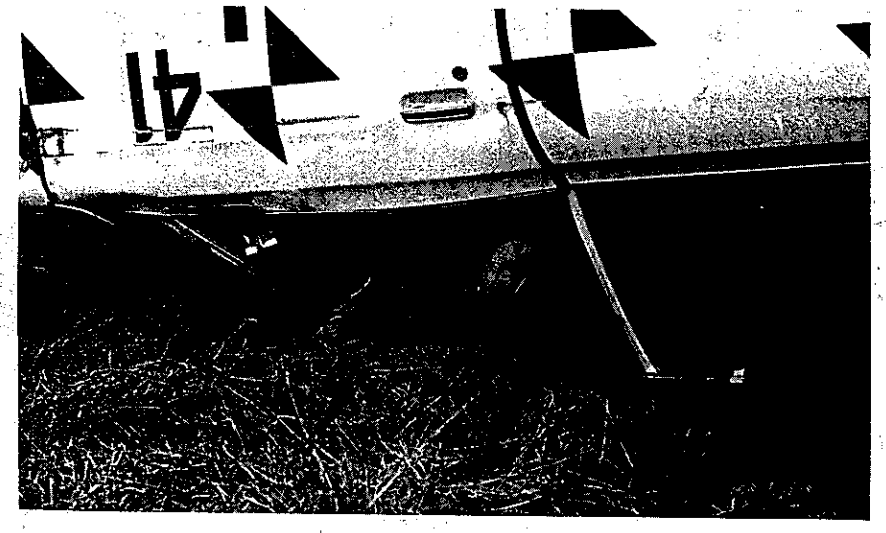

Final Location of Driver Dummy After Impact.

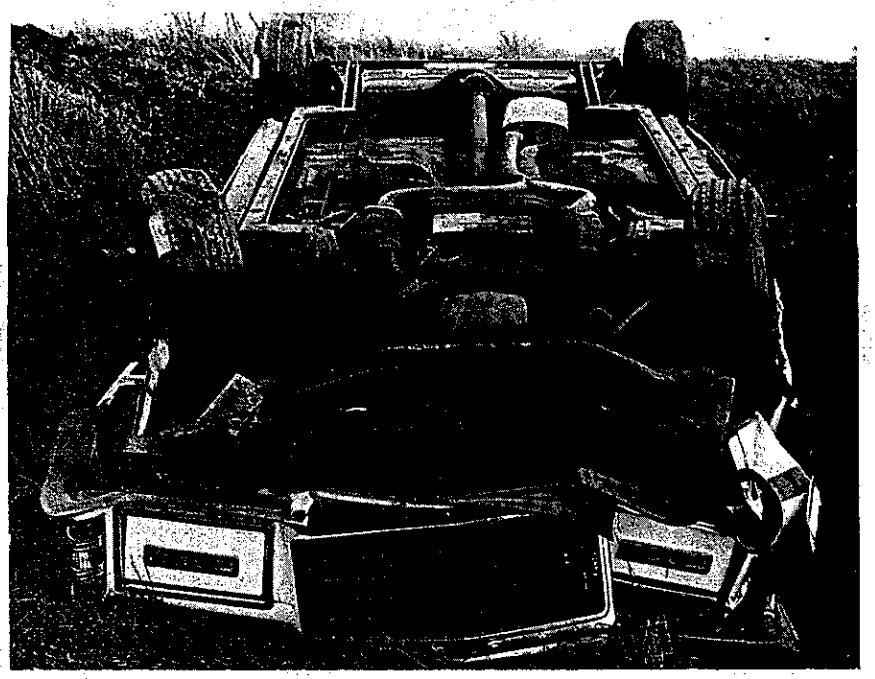

Front End of Vehicle. End of Frame is Bent to the Left Where Bumper was Sheared Off.

ClibPDF - www.fastio.com

FIGURE 20 TEST 412 VEHICLE DAMAGE

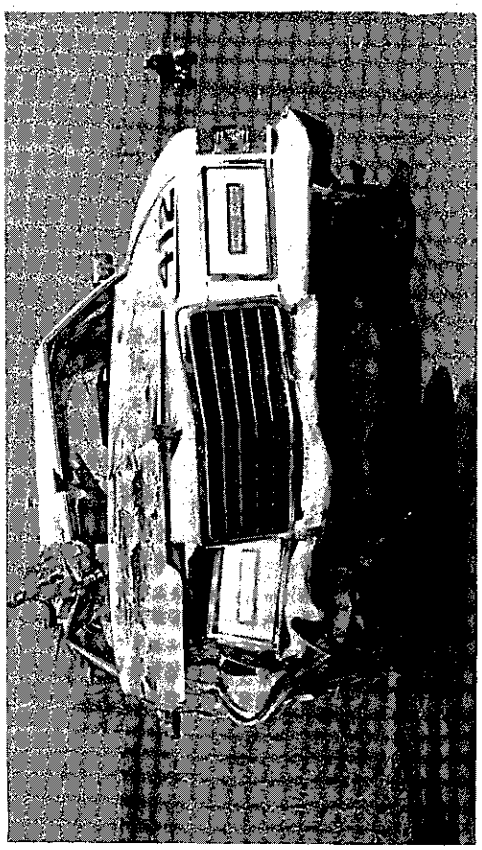

Roof Damage Due to Rollover Was Increased Due to Sliding Weight Device on Roof

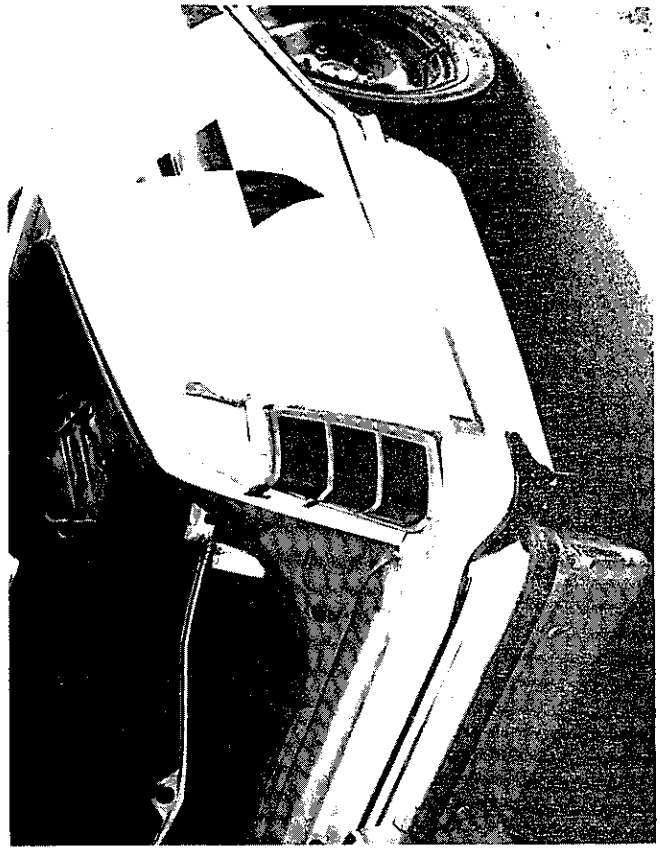

Minor Damage at Right Rear Corner of Vehicle

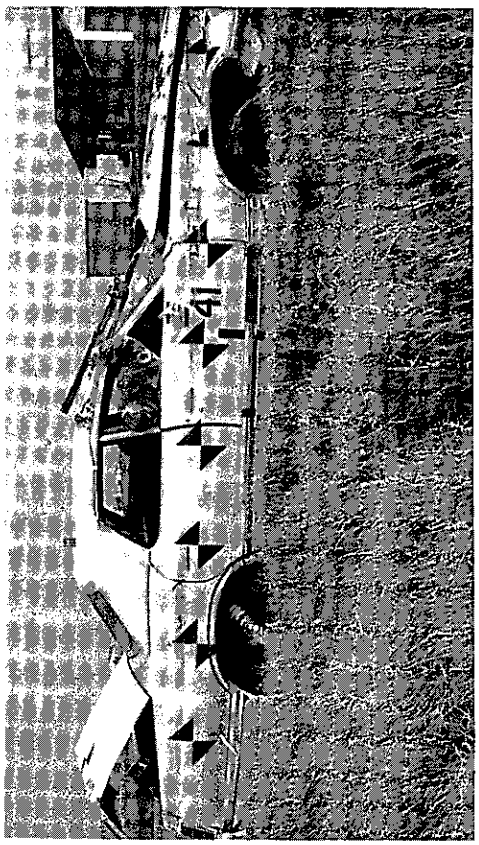

Impact Side of Vehicle

Crush at Top of Fender is From 4"x4" Tube Rail

ClibPDF - www.fastio.com

The key objective of this test was to check the structural adequacy of the bridge rail; therefore, the vehicle was remotely braked immediately after it lost contact with the rail. The wheels locked up a few feet before the end of the concrete deck. The vehicle continued to turn to the left after it left the pavement and continued across a soft earth field. The braking, turning and soft earth eventually caused the vehicle to turn close to 90° away from the line of the bridge rail, and to roll slowly over (180°) on its top. It came to rest at the toe of the earth berm 90 feet beyond the end of the test barrier. During impact, the maximum 50 millisecond average value of lateral vehicle acceleration was -9.5 g's and the comparable value of longitudinal vehicle acceleration was -5.1 g's. The occupant impact velocity was 23.5 fps in the lateral direction and 16.7 fps in the longitudinal direction.

5.2.2.2 Vehicle Damage - Test 412

The first part on the vehicle to contact the 3x12 rail was the right side of the front bumper. The bumper was forced laterally to the left until it sheared off from the frame of the vehicle. This connection was not stout; it consisted of two small H-shaped welds, each about six inches total length. The front ends of the frame were bent severely where the bumper was attached. The bumper was thrown ahead of the vehicle and landed near the final stopping place of the vehicle.

Crushing of the right front fender due to contact with the 3x12 rail was moderate to severe. Light denting and scraping were evident the entire length of the car on the right side due to contact with the 3x12 and 4x4 rails. Crushing on the right front part of the roof was due to the

ClibPDF - www.fastio.com

rollover; intrusion of the roof into the passenger compartment was only a few inches. Some of this intrusion was due to the sliding weight device mounted on the roof which pushed the roof in during the rollover.

The right front tire went flat after the test. When that wheel contacted the button head bolts on the 3x12 rail splice, the rim was crinkled and cupped at several points. Severe scraping of the right front wheel showed much of the force of the impact was taken at this point. Front end damage was a little too severe for the vehicle to be driven after the test.

5.2.2.3 Barrier Damage - Test 412

Rail and post deflections are shown in Figure 21. The maximum permanent lateral deflection of the 3x12 rail measured at the top of the rail was 7.63 inches at post 6. The maximum permanent lateral deflection of the top of the 3x12 rail with respect to a post (= the crush of the 8-inch pipe ring) was 5.56 inches at post 6. Maximum permanent vertical movement of the 3x12 rail was 0.38 inch up at post 6; at the 4x4 rail, it was 0.32 inch, also at post 6. Maximum permanent lateral deflection of a top of post was 3.38 inches at post 6. Four posts bent away from the deck leaving a gap between the post flange and the edge of deck. The largest gap was 0.81 inch at post 6.

Based on film data, the maximum dynamic deflection of the 3x12 rail measured at the top of the rail was 9 1/2 inches. Although the cables on the Houston potentiometers remained attached to the 3x12 rail in this test, the rail moved back too fast for the potentiometer to retract the cables and keep them taut. Therefore, the potentiometers did not

ClibPDF - www.fastio.com

TEST 412

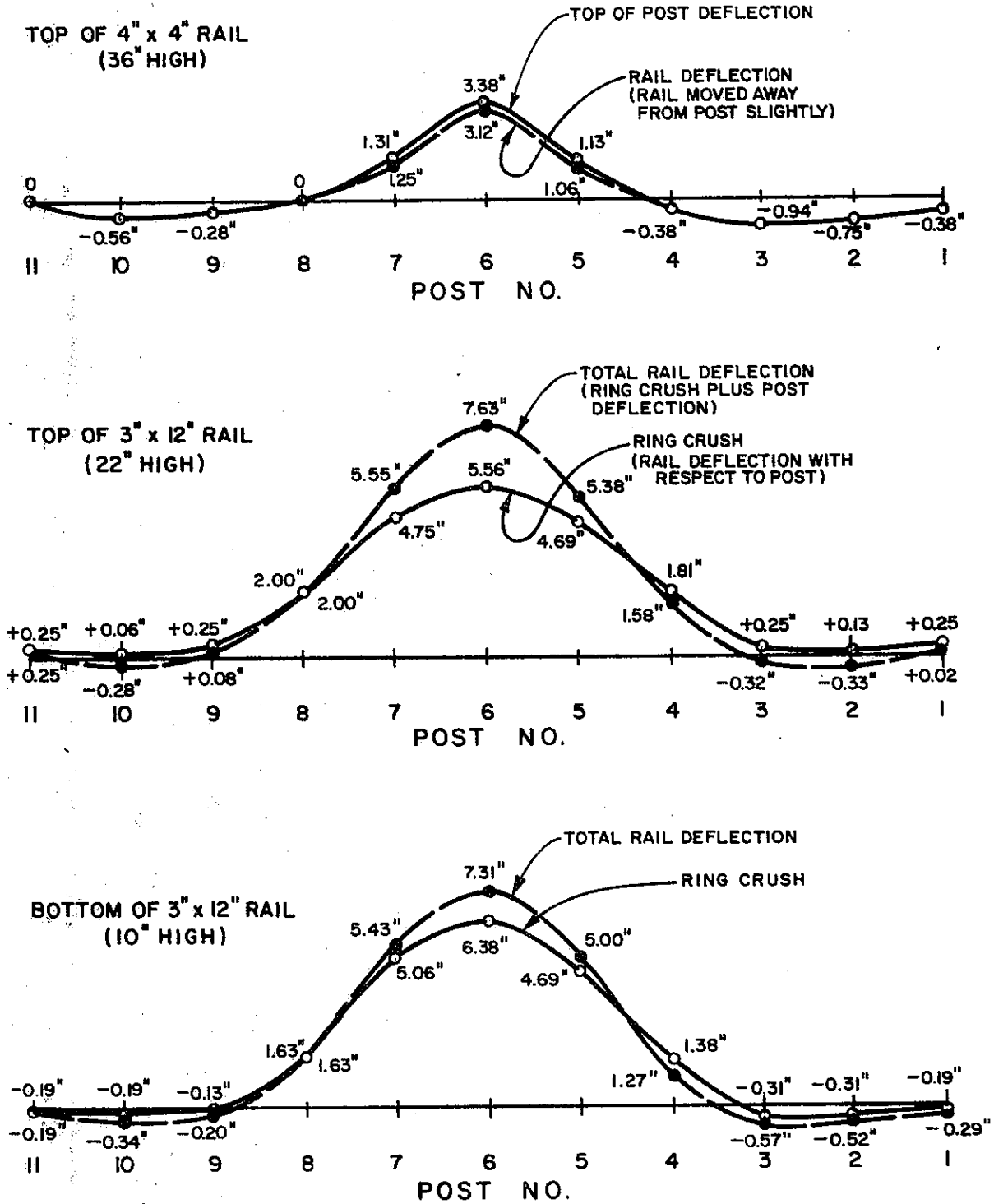

NOTE: FIGURE 14 SHOWS HOW DEFLECTIONS WERE MEASURED.

PERMANENT HORIZONTAL DEFLECTIONS OF RAIL AND POSTS

FIGURE 21

ClibPDF - www.fastio.com

provide an accurate measurement of the dynamic rail deflection. The 8-inch pipe rings crushed over 1/4 inch at posts 4 through 8 (Figure 18).

There was no distress at the post to deck connections, or at the cable end anchorages for the 3x12 rail.

5.2.2.4 Dummy Response - Test 412

During impact, the unrestrained dummy, which was in the driver's seat, was thrown across the car and plunged head first partially through the right front window. The Part 572 dummy has a trunk that is molded into a permanent seated position. Therefore, the upper legs, which were bent 90° at the pelvis, prevented the dummy from flying completely through the window. The portion of the dummy outside the car made no contact with the barrier. The upper portion of the dummy continued to dangle out the window while the car rolled over it. This rolling of the car on top of the dummy torso was a direct result of the soft earth which built up in front of the skidding wheels and caused the car to roll. The flight of the dummy through the window, however, was a direct result of the vehicle impact with the bridge rail. The dummy's left clavicle piece was fractured, probably during the rollover.

5.3 Discussion of Test Results

5.3.1 General - Safety Evaluation Criteria

In NCHRP Report 230(1), three evaluation factors are recommended for use in judging the crash test performance of bridge rails (in the longitudinal barrier category). The three factors which will be discussed in the following

ClibPDF - www.fastio.com

sections are (1) structural adequacy, (2) occupant risk, and (3) vehicle trajectory. The performance of other bridge rails tested by Caltrans and other states will also be compared with the results of Tests 411 and 412.

5.3.2 Structural Adequacy

The structural adequacy was evaluated by comparison of test results with the following criteria from Table 6 of NCHRP Report 230(1):

"A. Test article shall smoothly redirect the vehicle; the vehicle shall not penetrate or go over the installation although controlled lateral deflection of the test article is acceptable.

D. Detached elements, fragments or other debris from the test article shall not penetrate or show potential for penetrating the passenger compartment or present undue hazard to other traffic."

These criteria were met completely in both Test 411 and 412. The collapsing rings crushed as intended to control lateral deflection. Vehicle redirection was exceptionally smooth in both tests. For example, pitch, roll and yaw were much less than for a car impacting a New Jersey concrete median barrier. No pieces of the bridge rail were torn loose, and no portions of the railing showed potential for penetrating the passenger compartment. The rails and posts appeared to have residual strength to handle impacts more severe than the one in Test 412 (4530 lb/60.7 mph/23°). This could be helpful in moderate impacts by buses and trucks. It appears that after moderate impacts by passenger cars, such as Test 411, the bridge rail could be

ClibPDF - www.fastio.com

repaired simply by replacing the collapsed steel pipe rings. Slightly more crush in the pipe rings might have been possible if the bolts connecting the 1/2-inch plates to the post and rail had been offset.

5.3.3 Occupant Risk

The occupant risk was evaluated by comparison of test results with the following criteria from Table 6 of NCHRP Report 230(1):

"E. The vehicle shall remain upright during and after collision although moderate roll, pitching and yawing are acceptable. Integrity of the passenger compartment must be maintained with essentially no deformation or intrusion.

F. Impact velocity of hypothetical front seat passenger against vehicle interior, calculated from vehicle accelerations and 24 in. (0.61m) forward and 12 in. (0.30m) lateral displacements, shall be less than:

Occupant Impact Velocity-fps	
Longitudinal	Lateral
$40/F_1$	$30/F_2$

and vehicle highest 10 ms average accelerations subsequent to instant of hypothetical passenger impact should be less than:

Occupant Ridedown Accelerations-g's	
Longitudinal	Lateral
$20/F_3$	$20/F_4$

ClibPDF - www.fastio.com

where F_1, F_2, F_3, and F_4 are appropriate acceptance factors (see Table 8, Chapter 4 for suggested values).

G. (Supplementary) Anthropometric dummy responses should be less than those specified by FMVSS 208, i.e., resultant chest acceleration of 60g, Head Injury Criteria of 1000, and femur force of 2250 lb (10 kN) and by FMVSS 214, i.e., resultant chest acceleration of 60g, Head Injury Criteria of 1000 and occupant lateral impact velocty of 30 fps (9.1 m/s)."

During impact, and immediately afterward while on the pavement, the vehicles in Tests 411 and 412 were very stable. There was no intrusion of the passenger compartment in either test except that some roof crush occurred in Test 412 when the car rolled over. The test vehicle rolled over just before it came to a stop; however, this was due primarily to the curving vehicle path over soft earth plus the remote braking and the slight downslope beyond the end of the concrete deck.

The occupant impact velocities in Test 411 were 17.9 fps lateral and 6.8 fps longitudinal. The suggested maximum values in Table 8 of the Appendix to NCHRP 230 are 20 fps lateral and 30 fps longitudinal. Hence the test was successful based on these standards. The low longitudinal value illustrates the smooth movement of the car in its line of travel and the lack of any snagging which helps lower the risk to passengers. Although the occupant impact velocities are only required to be checked in the 1800 lb/60 mph/15° (nominal) test, our Test 411, it is interesting to note that in Test 412 they also fell in a

ClibPDF - www.fastio.com

reasonable range. The lateral value was 23.5 fps and the longitudinal value was 16.7 fps.

The occupant ridedown accelerations were to be limited to 15 g's, both lateral and longitudinal. By inspection of the accelerometer records, it can be seen the actual values were well below 15 g's in both Tests 411 and 412.

The former method of evaluating occupant risk (then called impact severity) in TRC No. 191(19) was to calculate the maximum 50 millisecond average values of lateral and longitudinal vehicle acceleration for a 2250 lb/60 mph/15° test. Recommended maximum values in the lateral and longitudinal direction were -3 g's and -5 g's, preferred, and -5 g's and -10 g's, acceptable. Actual values in Test 411 were -5.0 g's lateral and -1.6 g's longitudinal. These values also show that in the lateral direction, the test values were near or at the limit, and in the longitudinal direction, the impact was very smooth. It should be noted that cars impacting most bridge rails and all concrete median barriers currently in use, equal or exceed the -5 g limit in the lateral direction in crash tests [(20) and unpublished results of recent bridge rail tests by TTI]. It appears that the lateral acceleration cannot be reduced below -5 g's when 1800 or 2250 lb cars impact fairly rigid barriers at angles of 15° and speeds of 60 mph.

In Test 411, the angle of impact was about 12°. Had the angle been 15°, the accelerations might have been slightly higher. There was no reason to believe, however, that any dramatic increases would have resulted.

Dummy measurements are optional according to NCHRP Report 230. One of the criteria, the Head Injury Criterion (HIC),

ClibPDF - www.fastio.com

was calculated to be 65 in Test 411 and 228 in Test 412. These values are both much less than the upper limit of 1000 which marks the threshold of serious injury or death. The movies show the dummy was thrown forcefully across the car in both tests. Although this appears disturbing, the same dummy behavior might be expected during even lighter impacts. This dummy behavior clearly illustrates the value of seat restraints which were used in all crash tests before they were eliminated in NCHRP Report 230(1).

It should be noted that none of the above means of evaluating the occupant risk are exact methods of predicting injury levels during impacts. NCHRP Report 230(1) states on page 12, "Whereas the highway engineer is ultimately concerned with safety of the vehicle occupants, the occupant risk criteria should be considered as the guidelines for generally acceptable dynamic performance. These criteria are not valid, however, for use in predicting occupant injury in real or hypothetical accidents." On page 3 it states, "Relationship between vehicle dynamics and probability of occupant injury and degree of injury sustained is tenuous, because it involves such important but widely varying factors as occupant physiology, size, seating position, restraint, and vehicle interior geometry and padding."

5.3.4 Vehicle Trajectory

The vehicle trajectory was evaluated by comparison of test results with the following criteria from Table 6 of NCHRP Report 230(1):

"H. After collision, the vehicle trajectory and final stopping position shall intrude a minimum distance, if at all, into adjacent traffic lanes.

ClibPDF - www.fastio.com

I. In test where the vehicle is judged to be redirected into or stopped while in adjacent traffic lanes, vehicle speed change during test article collision should be less than 15 mph and the exit angle from the test article should be less than 60 percent of test impact angle, both measured at time of vehicle loss of contact with test device."

In Test 411, the vehicle trajectory was ideal. The vehicle was turned almost parallel with the bridge rail during impact, and continued parallel to the rail less than 2'-0" away from it. The exit speed was approximately 3 mph less than the impact speed, much less than the 15 mph limit on change of speed.

In Test 412, the vehicle trajectory was good also. The exit angle was approximately 2.5° and the exit speed was 10 mph less than the impact speed. These low changes in vehicle speed in Tests 411 and 412 correspond to the relatively low values of longitudinal vehicle acceleration. The soft earth which caused the car to roll over in Test 412 would not be present on paved bridge decks and approach roadways.

5.3.5 Metal Tube Bridge Railing - Standard Designs in California

In the Introduction, several bridge rail designs were described which were tested and used in California. In the group of all steel or combination steel and concrete designs, only two all steel designs are still used for new construction, the Type 8 and Type 115 (Figure 3). Although these are considered effective barriers, the new Type 18 appears to have some advantages.

ClibPDF - www.fastio.com

The Type 8 has only been crash tested with large heavy passenger cars weighing approximately 4500 lbs and impacting the test barrier at speeds close to 60 mph and angles close to 25°. Thus, it has never been evaluated for impacts by small, lightweight passenger cars. The face of the rails is set out 3 1/2 inches from the posts; the lower rail has a 14-inch clearance from the deck. The Type 18, however, has the main 3x12 rail set out 11 1/2 inches from the post and a rail to deck clearance of 10 inches. Hence the Type 18 provides more protection against small wheels on lightweight cars becoming entrapped under the rail, snagging the post, and causing the car to spin out. In addition, the Type 8, which uses two 2x6 rails, has the narrow (2 inch) edges exposed to traffic so that they concentrate the load on the car and probably bite into the sheet metal more than the broad face of the 3x12 rail and the 4x4 rail on the Type 18. Further, the Type 8 has an overall height of 27 inches compared with 36 inches for the Type 18. This added height should provide more protection against high center of gravity vehicles getting over the rail. And finally, the Type 8 does not have the energy absorbing rings of the Type 18 which soften an impact.

The Type 8 is somewhat less expensive than the Type 18 and is a more open rail, but the crash performance of the Type 18 appears to outweigh any advantages held by the Type 8.

The Type 115 can be compared in a similar way with the Type 18. The Type 115 has never been crash tested. It has rails set out 4 inches from the post, a rail to deck clearance of 16 inches, two 4-inch high rail faces exposed to traffic, an overall height of 30 inches and no energy absorbing elements. Therefore, the Type 18 geometry appears

ClibPDF - www.fastio.com

to be superior to that of the Type 115 just as it is to the Type 8 bridge rail.

5.4 Discussion of Other Evaluation Factors

5.4.1 See-Through Properties

There seems to be a human compulsion when crossing a bridge to look out and down at the scene below, and a related human frustration when a bridge rail or bridge member obstructs that view. These feelings were expressed forcefully by some attendees at public meetings and some Caltrans staff in opposition to use of the all-concrete Type 25 bridge barrier which restricts the view. The sentiments were particularly strong in Northern California where lush forested mountains and valleys are noted for their scenic grandeur.

There are some see-saw arguments for and against opening up the railing. Traffic safety is probably enhanced if the driver is not straining to see the view. However, the driver may have been scanning the scenery for miles of highway before the bridge in scenic areas and has adjusted to the combination of looking and driving. If this is the case, his need to view scenery on the short trip across the bridge seems questionable, unless of course, the view from the bridge is especially spectacular. On the other hand, extraordinary scenery should be viewed from vista points which exist at the ends of some bridges, or the driver should find a parking place near the view and get out to inspect it at his leisure. Nevertheless, in this hurry-up society, many motorists do not want to take the time for a stop. No matter what arguments exist against providing a view for drivers, passengers are free to view the scenery

ClibPDF - www.fastio.com

at all times and will resent obstructions. In the face of these conflicting arguments, the Office of Structures Design concluded that a see-through bridge railing should be qualified for use in communities where they desire one.

Many variables affect the "see-throughness" of a bridge rail. The view is different from small vs large cars, driver vs passenger position, inside vs outside lane position of the car, viewing angle ahead vs perpendicular to the line of travel, low vs high bridges (to see a valley below), flat vs curved bridges with superelevation, and with a shoulder vs no shoulder. Eye heights in cars varied from about 41 to 45 inches in U.S. sedans in the 1980 model year(21). This has been the range for about 20 years. In the 1950s, eye heights were up to 54 inches. Sports cars in the 1980 model year averaged about 39-40 inches.

Given the many variables in viewing position, there is probably no ideal height for the rail elements for optimum visibility. A barrier with a venetian blind or egg crate system of thin rails spaced closely together could be designed to provide rail strength and distributed loading without blotting out large bands of the landscape. This solution would no doubt be quite expensive to fabricate. Also, as noted in the Introduction, too much openness reduces the driver's feelings of security and he will shy away from the railing. Thus, it was decided to keep the railing design as open as possible while providing crash protection based on the best current knowledge available.

Figures 22 through 26 were prepared before testing to compare the Type 18 with previous standard designs. They represent the driver's view from a car in the outside lane next to a 10-foot shoulder. The figures show clearly that

ClibPDF - www.fastio.com

FIGURE 22 VIEW FROM CAR OF TYPE 8 BRIDGE RAIL

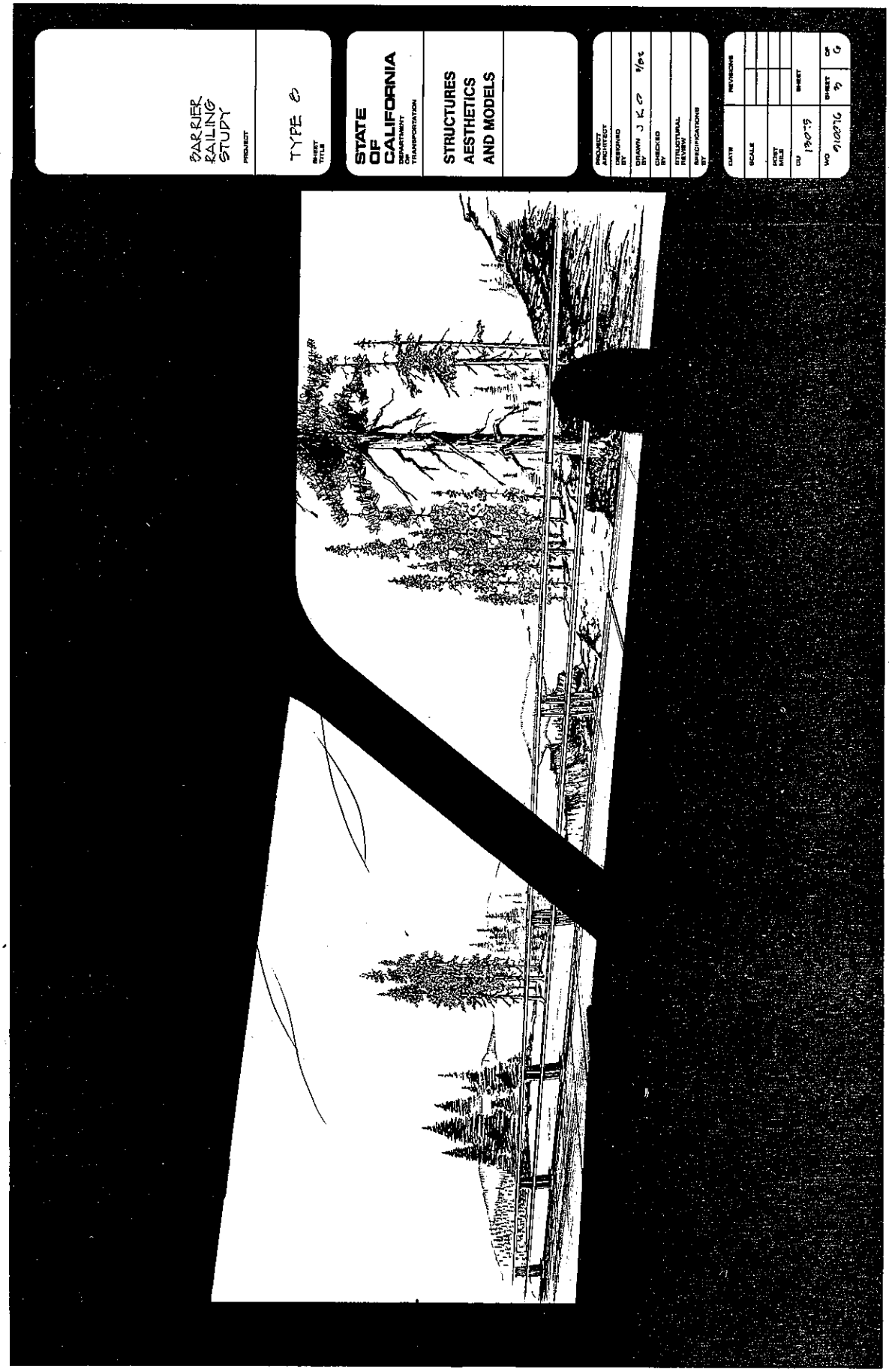

ClibPDF - www.fastio.com

FIGURE 23 VIEW FROM CAR OF TYPE 20 BRIDGE RAIL

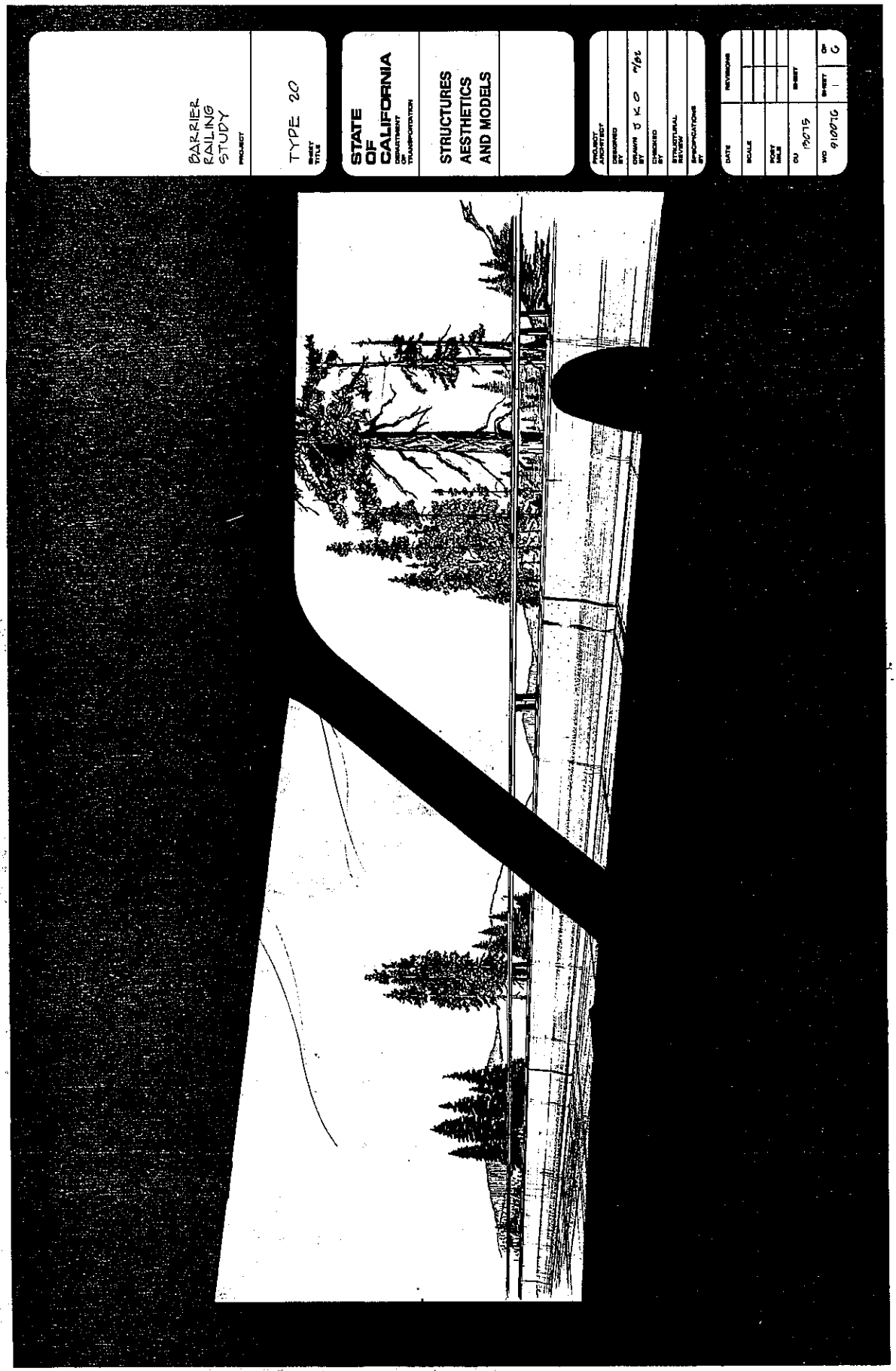

ClibPDF - www.fastio.com

FIGURE 24 VIEW FROM CAR OF TYPE 25 BRIDGE RAIL

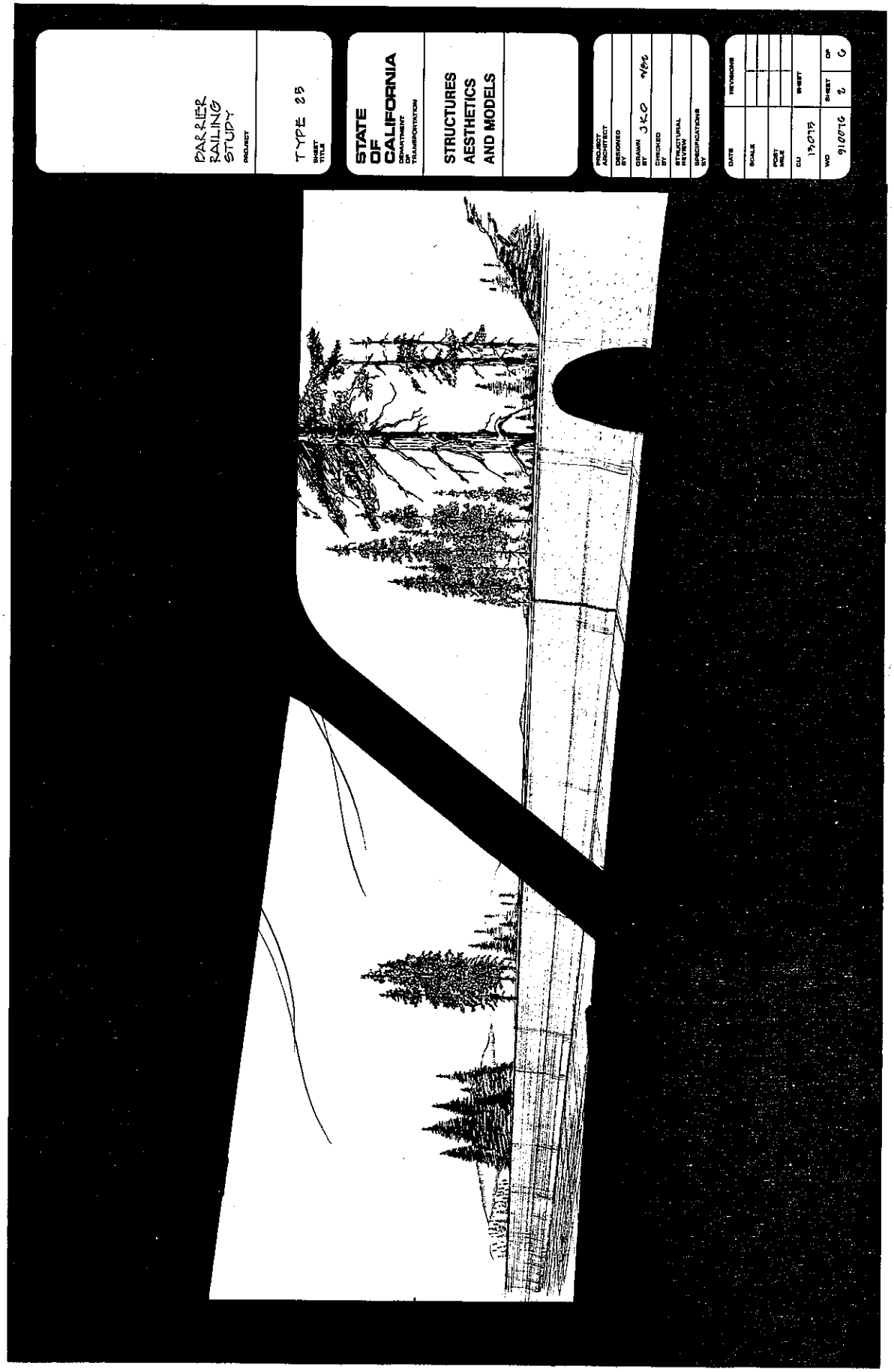

ClibPDF - www.fastio.com

FIGURE 25 VIEW FROM CAR OF FHWA COLLAPSING RING BRIDGE RAIL FOR HEAVY VEHICLES

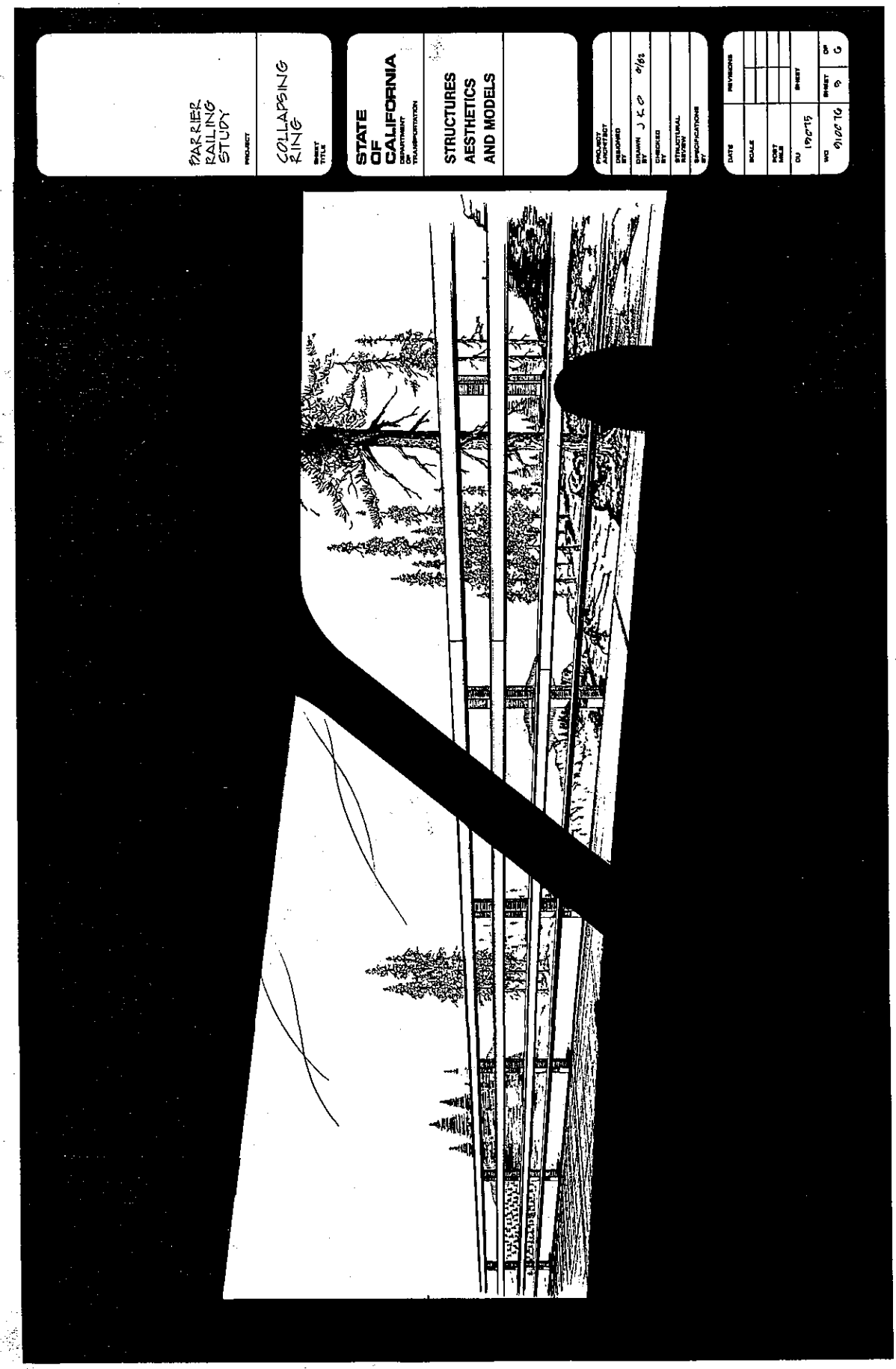

ClibPDF - www.fastio.com

FIGURE 26 VIEW FROM CAR OF TYPE 18 BRIDGE RAIL

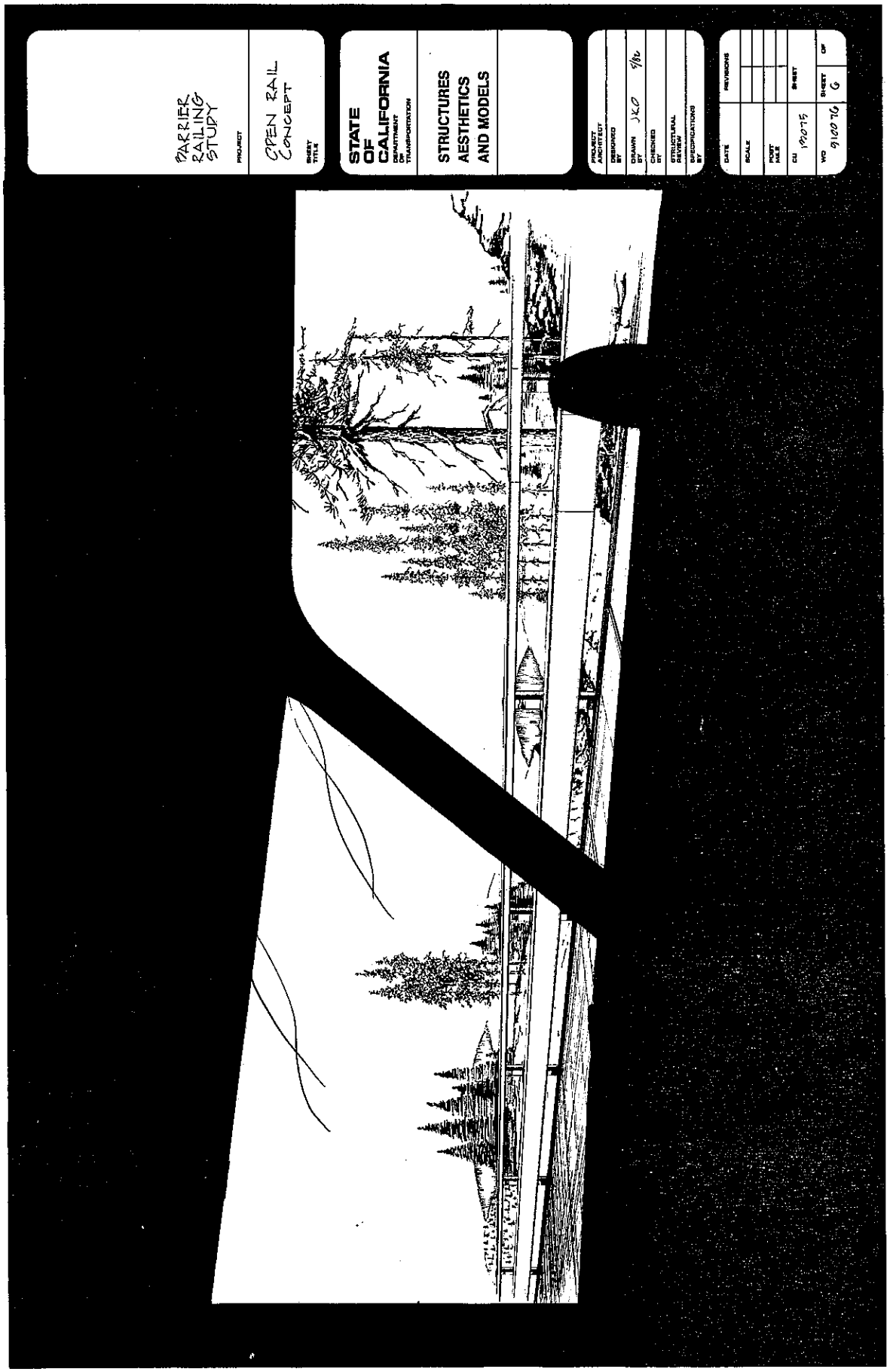

ClibPDF - www.fastio.com

the amount of railing which is open makes a noticeable difference in visibility through the rail. They also show that space between the deck and bottom rail helps satisfy the urge to look down to the valley floor. Comparing the open space in a vertical plane from deck level to 36 inches high, the Type 18 (36 inches high) has 55% open space (excluding posts) and the all-concrete Type 25 (32 inches high) has 11% open space. The open area of the Type 18 cannot be increased much further because of vehicle impact strength and redirection requirements.

Although the see-through bridge rail was desired mainly to improve the view of the scenery beyond and below the bridge, it will be useful where vertical and/or horizontal sight distance is limited. A common example of this is locations where a road intersects the highway at a right angle near the end of a bridge and a solid concrete bridge rail obstructs the view of drivers on the sideroad. Sight distance can be a problem at off ramps and on ramps also.

5.4.2 Self-Cleaning and Snow Removal Properties

Blowing sand is a problem in some local areas of the state. The problem has been most severe in District 8 in the lower desert mainly on I-10 between Cabazon and Thousand Palms and on Route 111 from I-10 to Windy Point. These sections of highway total about 20 miles. The Type 8 bridge rail has been used on I-10 and has been effective in preventing any collection of sand in front of the railing. This is a low rainfall area but the wind keeps the decks clean.

Route 111 has only one long bridge in the sandstorm area. The bridge rail on this structure has a concrete parapet which traps sand. The sandstorms occur mainly in March

ClibPDF - www.fastio.com

through June, may occur several times a month, and on bad days, the bridge deck must be cleaned two or three times a day.

During severe storms, visibility is zero and the highway is closed. Most of the wind-borne sand is within 2'-0" of the ground. At some ramps, a combination of metal beam guard-rail and asphalt concrete dikes were causing large sand buildups, and both had to be removed.

In adjoining District 11, the southernmost district in the state, the blowing sand problem is less severe and is concentrated in a few local areas. These include I-10 near Blythe, one mile; Route 78 near Glamis, 5-7 miles; and I-8 near Winterhaven and the All American Canal near the eastern edge of the state; and also Route 111 west of Indio near District 8. The highway near Glamis has no bridges. Plantings have been used in some high wind areas to screen out the sand. This sand must be removed periodically.

Thus, it appears that although open bridge railings, such as the Type 18, which has no obstructions at deck level, are necessary in blowing sand areas, these areas make up a small percentage of the state highway system and few new bridges will be needed in these areas.

Drifting snow is a problem in other areas of the state. It will build up on bridge decks no matter what type of bridge railing is used, and the wind will not necessarily clean the deck even if the bridge rail is an open type. However, an open railing may permit a snowplow to push the snow through the railing and off the deck.

ClibPDF - www.fastio.com

An open railing would be less desirable than a solid one on bridges over streets and highways where snow cannot be dropped on the lower roadway. Here the open railing would hamper a snowplow operator. If the bridges have a rail with a concrete parapet, the snow generally is pushed to the side of the roadway, then blown over the edge with a separate piece of equipment. The blower can be directed forward or backward to prevent snow from dropping on a roadway below. Sometimes the snow is trucked away. Large plows can push much of the snow over the top of a concrete parapet.

Whether a bridge rail is open or not, it must be sturdy enough to resist damage from a snowplow butted up against the rail. Also, it must not have any gaps, projections or other discontinuities which would snag a snowplow. Figure 27 shows how a snowplow can snag on the baseplate bolts for a Type 8 bridge rail. If the snowplow cannot travel up against the rail or close to it, a mound of snow and ice may be left in front of the rail making it ineffective and possibly creating a ramp. Assuming that snowplows are not jammed into a Type 18 bridge rail with enough force to collapse the steel pipe rings, the Type 18 should present a smooth guide for the snowplow.

Plows have been able to push snow through a Type 8 bridge rail with its small rails, but the 12-inch high rail on the Type 18 may hinder this ability.

In Maine, where a high performance collapsing ring bridge rail was used, there was a slight problem with snow that collected under the 18-inch diameter rings. The snowplows could not reach the snow, so when it melted, water ran across the deck and sometimes refroze.

ClibPDF - www.fastio.com

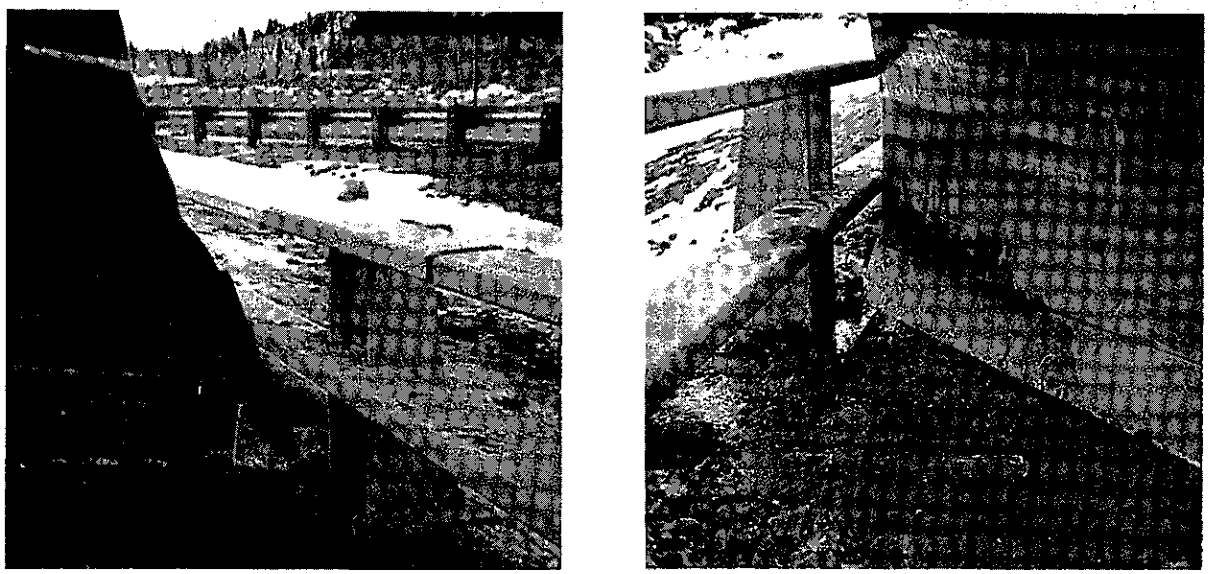

FIGURE 27 SNOWPLOW SNAGGING ON BASEPLATE BOLTS OF TYPE 8 BRIDGE RAIL

ClibPDF - www.fastio.com

A third location where open bridge rails may be preferable to a solid concrete parapet is in an area subject to inundation where rapid drainage is needed. An example of this is the portion of Tehama Route 99 south of Red Bluff which is on a floodplain. This application in the state would be limited.

5.4.3 Costs

The Caltrans Office of Structures Design has provided a range of average construction costs in California for four types of bridge rail discussed in this report. The costs are based on 1982 data and the range reflects differences in the amount of railing in a contract and the location of the structure.

Bridge Rail	Cost Per Lineal Foot
Type 8	$35-45
Type 115	$50-65
Type 18	$65-80
Type 25	$30-40

These figures should be used only as a guide to the relative cost of each barrier.

ClibPDF - www.fastio.com

6. REFERENCES

1. "Recommended Procedures for the Safety Performance Evaluation of Highway Appurtenances," Transportation Research Board, National Cooperative Highway Research Program Report 230, March 1981.

2. Beaton, J. L., H. A. Peterson and R. N. Field; "Final Report of Full Scale Dynamic Tests of Bridge Curbs and Rails," California Department of Transportation, August 30, 1957. (Concrete parapets and concrete parapet with steel pipe rail.)

3. Beaton, J. L. and R. N. Field; "Dynamic Full Scale Tests of Bridge Rails," California Department of Transportation, December 1960. (W-section rail/steel post barrier and concrete baluster.)

4. Nordlin, E. F., R. N. Field and R. P. Hackett; "Dynamic Full Scale Impact Tests of Bridge Barrier Rails," California Department of Transportation, November 1963. (Concrete parapet with steel or aluminum posts and pipe rails.)

5. Nordlin, E. F., J. R. Stoker, R. N. Field, R. N. Doty and R. A. Pelkey; "Dynamic Full Scale Impact Tests of Steel Bridge Barrier Rails," California Department of Transportation, June 1967. (Low steel tube rail and steel post barrier.)

ClibPDF - www.fastio.com

6. Nordlin, E. F., W. H. Ames, R. P. Hackett, J. J. Folsom, R. N. Field and R. A. Pelkey; "Dynamic Tests of Type 9 Bridge Barrier Rail and Type 8 Bridge Approach Guardrail," California Department of Transportation, June 1969. (Low vertical concrete parapet with steel tube rail and steel posts on top.)

7. Nordlin, E. F., J. H. Woodstrom, R. P. Hackett, J. J. Folsom, J. A. Halterman and R. N. Doty; "Dynamic Tests of the California Type 20 Bridge Barrier Rail," California Department of Transportation, January 1971. (Safety shape concrete parapet with steel tube rail and steel posts on top.)

8. Nordlin, E. F., J. R. Stoker, R. P. Hackett, R. N. Doty and R. A. Pelkey; "Dynamic Tests of the Modified California Type 20 Bridge Barrier Rail," California Department of Transportation, December 1972. (Low safety shape lightweight concrete parapet with steel tube rail and steel posts on top.)

9. Nordlin, E. F., J. R. Stoker, R. P. Hackett, R. N. Doty and R. A. Pelkey; "Dynamic Tests of the California Type 15 Bridge Barrier Rail," California Department of Transportation, June 1971. (Steel tube rail and steel post barrier for narrow bridges on secondary highways.)

10. "Guide for Selecting, Locating, and Designing Traffic Barriers," American Association of State Highway and Transportation Officials, 1977.

ClibPDF - www.fastio.com

11. Kimball, C. E., M. E. Bronstad, J. D. Michie, J. A. Wentworth and J. G. Viner; "Development of a New Collapsing-Ring Bridge Rail System," Transportation Research Record 566, 1976, pp. 31-43.

12. Kimball, C. E., M. E. Bronstad, J. D. Michie, J. A. Wentworth and J. G. Viner; "Full Scale Tests of a Modified Collapsing-Ring Bridge Rail System," Transportation Research Record 594, 1976, pp. 27-31.

13. Hirsch, T. J., "Bridge Rail to Restrain and Redirect Buses," Texas Transportation Institute, Research Report 230-3, February 1981.

14. Bryden, James E. and Kenneth C. Hahn; "Crash Tests of Box-Beam Upgradings for Discontinuous-Panel Bridge Railing," New York State Department of Transportation, Research Report 92, September 1981.

15. Michie, Jarvis D. and Maurice E. Bronstad; "Upgrading Safety Performance in Retrofitting Traffic Railing Systems," Southwest Research Institute for Federal Highway Administration, Report No. FHWA-RD-77-40, September 1976.

16. Arnold, Althea and C. E. Buth; "Full Scale Crash Test of Tru-Beam Aluminum Bridge Railing," Texas Transportation Institute for the The Aluminum Association, Inc., June 1981.

17. Perrone, Nicholas; "Thick-Walled Rings for Energy-Absorbing Bridge Rail Systems," Catholic University of America, Washington, D.C., December 1972.

ClibPDF - www.fastio.com

18. Carney, John F. and Richard J. Sazinski; "Portable Energy Absorbing System for Highway Service Vehicles," ASCE Transportation Engineering Journal, July 1978.

19. "Recommended Procedures for Vehicle Crash Testing of Highway Appurtenances," Transportation Research Board, Transportation Research Circular No. 191, February 1978.

20. Bronstad, M. E., L. R. Calcote, C. E. Kimball, Jr.; "Concrete Median Barrier Research," Volume 2, Research Report, Southwest Research Institute, Report No. FHWA-RD-77-4, March 1976.

21. Farber, Eugene I., "Driver Eye Height Trends and Sight Distance on Vertical Curves," Ford Motor Company, Transportation Research Board Annual Meeting, January 1982.

22. "U.S. and Foreign Passenger Car Specifications," Motor Vehicle Manufacturers Association, 1972-1981.

23. Telephone conversation with representative of Product Claims Office, Honda Automobile Company, July 1982.

24. Rasmussen, R. E., F. W. Hill and P. M. Riede; "Typical Vehicle Parameters for Dynamics Studies," General Motors Proving Ground, April 1970.

ClibPDF - www.fastio.com

APPENDIX A: Test Vehicle Equipment and Cable Guidance System

The test vehicles were modified as follows for the crash tests:

The gas tanks on the test vehicles were disconnected from the fuel supply line and drained. Shortly before the test, dry ice was placed in the tank as a safety precaution to drive out the gas fumes. A one-gallon safety gas tank was installed in the trunk compartment and connected to the fuel supply line.

Four 12-volt wet cell motorcycle storage batteries were mounted in the trunk. Two supplied power to a high speed camera and lamps located inside the vehicle. The other pair of batteries operated the solenoid-valve braking system and other test equipment in the vehicle.

The gas pedal was linked to a small cylinder with a piston which opened the throttle. The piston was started by a hand thrown switch on the rear fender of the test vehicle. The piston was connected to the same CO_2 tube used for the brake system, but a separate regulator controlled the pressure.

A speed control device connected between the negative side of the coil and the battery of the vehicle regulated the speed of the test vehicle based on speedometer cable output. This device was calibrated prior to the test by conducting a series of trial runs through a speed trap composed of two tape switches set a known distance apart and connected to a digital timer.

ClibPDF - www.fastio.com

A cable guidance system directed the vehicle into the barrier. The guidance cable, anchored at each end of the vehicle path to a threaded coupler embedded in a concrete footing, passed through a guide bracket bolted to the spindle of the front wheel of the vehicle. A steel knockoff bracket, anchoring the end of the cable closest to the barrier to a concrete footing, projected high enough to knock off the guide bracket, thereby releasing the vehicle from the guidance cable before impact.

A micro switch was mounted below the front bumper and connected to the ignition system. A trip plate on the ground near impact triggered the switch when the car passed over it, thus opening the ignition circuit and cutting the vehicle engine before impact. This switch also released the sliding weight (mounted on top of the car) from an electromagnet so the weight was free to travel, slightly before the instant of impact.

A solenoid-valve actuated CO_2 system controlled remote braking after impact or emergency braking any other time. Part of this system was a cylinder with a piston which was attached to the brake pedal. The pressure operating the piston was set during trial runs to stop the test vehicle without locking up the wheels. When activated, the brakes were applied in less than 100 milliseconds.

The remote brakes were controlled at the console trailer. A cable ran from the console trailer to the electronic instrumentation trailer. From there, the remote brake signal was carried on one channel of the tether line which was connected to the test vehicle. Any loss of continuity in these cables activated the brakes and cut off

ClibPDF - www.fastio.com

the ignition automatically. Also, when the brakes were applied by remote control from the console trailer, the ignition was automatically cut off.

Figures A1 and A2 show the vehicle dimensions. Dimensions were taken from Reference 22 or measured.

ClibPDF - www.fastio.com

TEST NO. 411 TEST DATE — 12-3-82

VEHICLE — 1979 HONDA CIVIC HATCHBACK

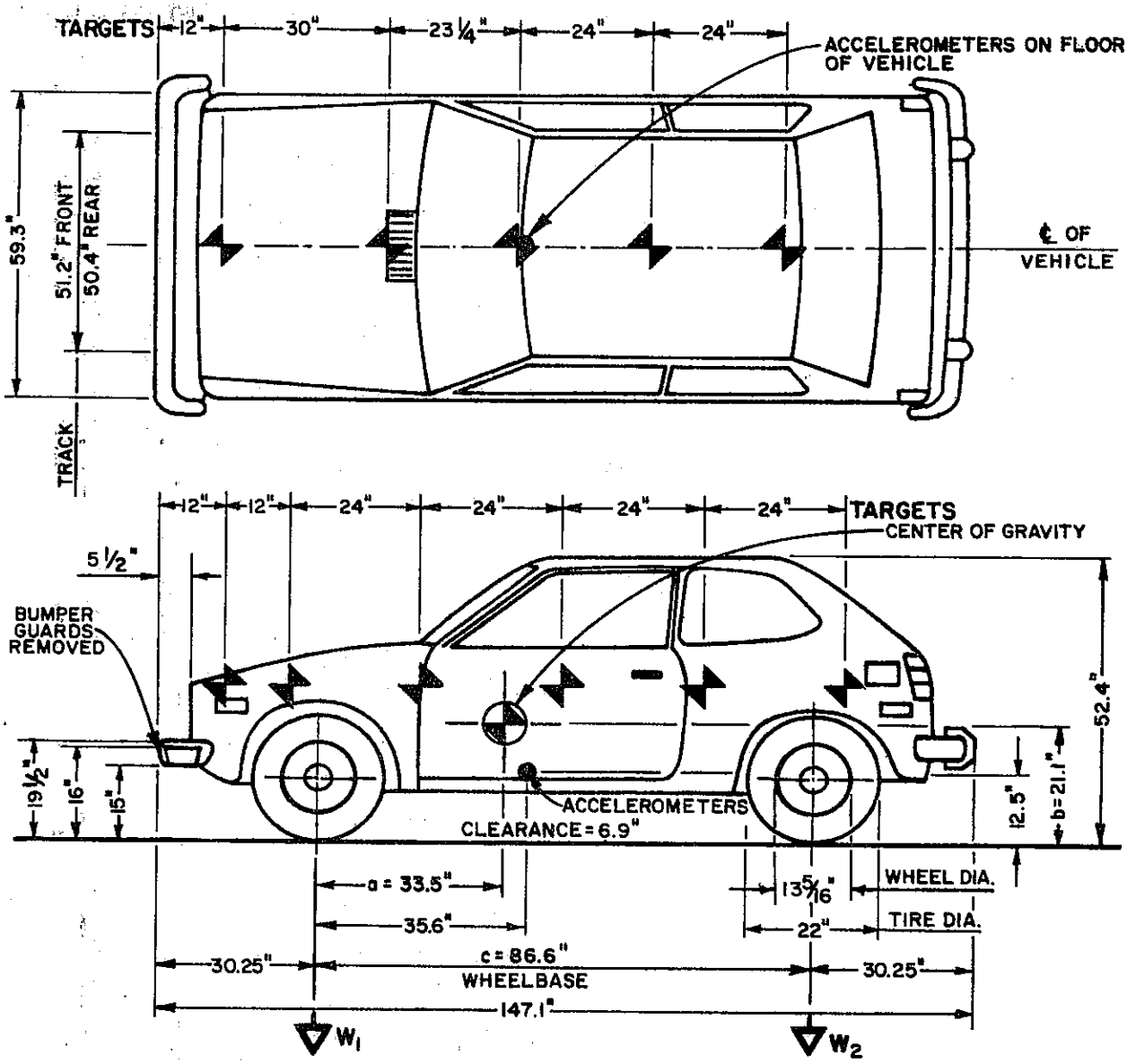

WEIGHT-lb	TEST INERTIAL	DUMMY	GROSS STATIC
W_1	1134	—	—
W_2	716	—	—
W_T	1850	165	2015

$$a = \frac{W_2(c)}{W_1 + W_2}$$

MOMENTS OF INERTIA (lb-ft-sec²)

ROLL	188	(23)
YAW	615	(23)
PITCH	496	(1-Table 2)

CAR DIMENSIONS

FIGURE A1

ClibPDF - www.fastio.com

TEST NO. 412 TEST DATE — 1-11-83

VEHICLE — 1977 FORD LTD. - 4 DOOR SEDAN

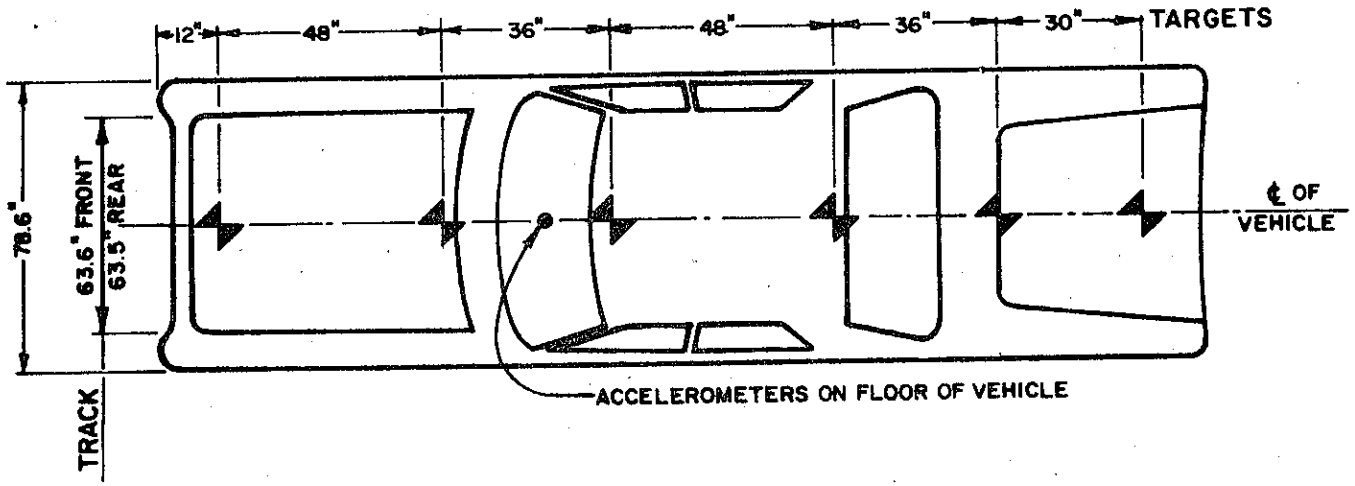

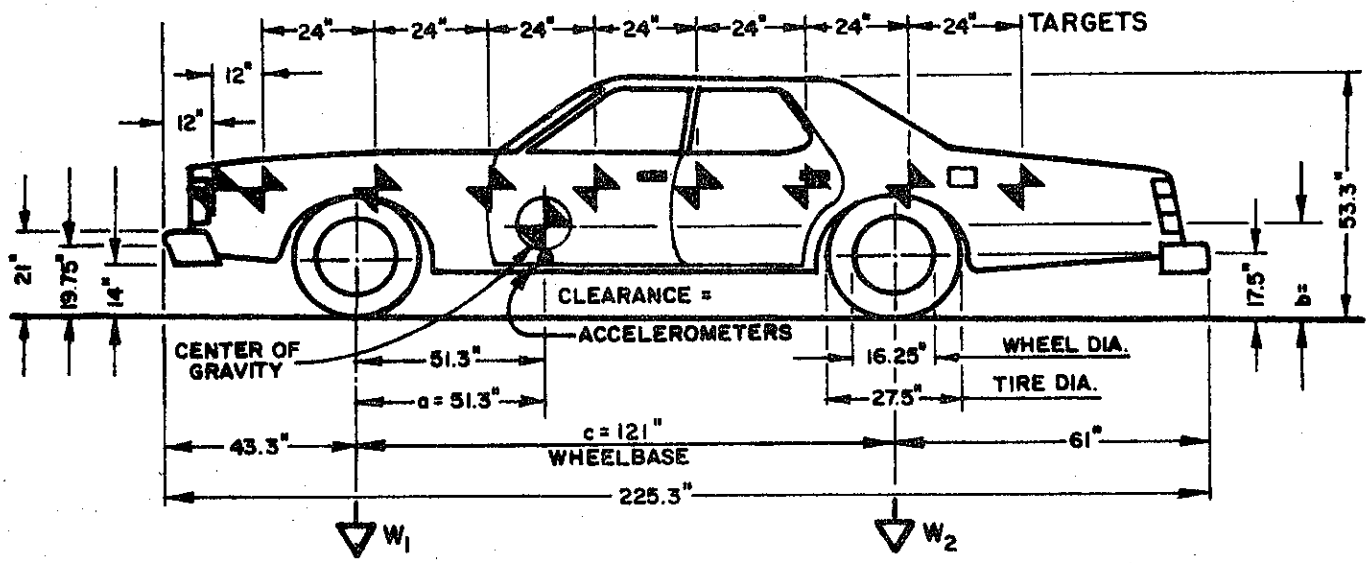

WEIGHT-lb	TEST INERTIA	DUMMY	GROSS-STATIC
W_1	2652		
W_2	1878		
W_T	4530	165	4695

$$a = \frac{W_2(c)}{W_1 + W_2}$$

MOMENTS OF INERTIA (lb-ft-sec^2)

ROLL	—	460 ± 50	$I_x = 0.16\,W_T - 265$ (24)
YAW	4167 (1-Table 2)	$3958 {}^{+220}_{-450}$	$I_z = 1.26W_T - 1750$ (24)
PITCH	4625 (1-Table 2)	3099 ± 300	$I_y = 1.13\,W_T - 2020$ (24)

CAR DIMENSIONS

FIGURE A2

ClibPDF - www.fastio.com

Five tape switches, placed at 10 foot intervals, were attached to the ground perpendicular to the path of the impacting vehicle near the bridge railing. Flashbulbs were activated sequentially when the tires of the test vehicle rolled over the tape switches. The flashbulb stand was placed in view of most of the data cameras. The flashing bulbs were used to correlate the cameras with the impact events; and to calculate the impact speed independent of the electronic speed trap. The tape switch layout is shown in Figure B2.

All high speed cameras had timing light generators which exposed red timing pips on the film at a rate of 1000 per second. The pips were used to determine camera frame rates and to establish time-sequence relationships.

ClibPDF - www.fastio.com

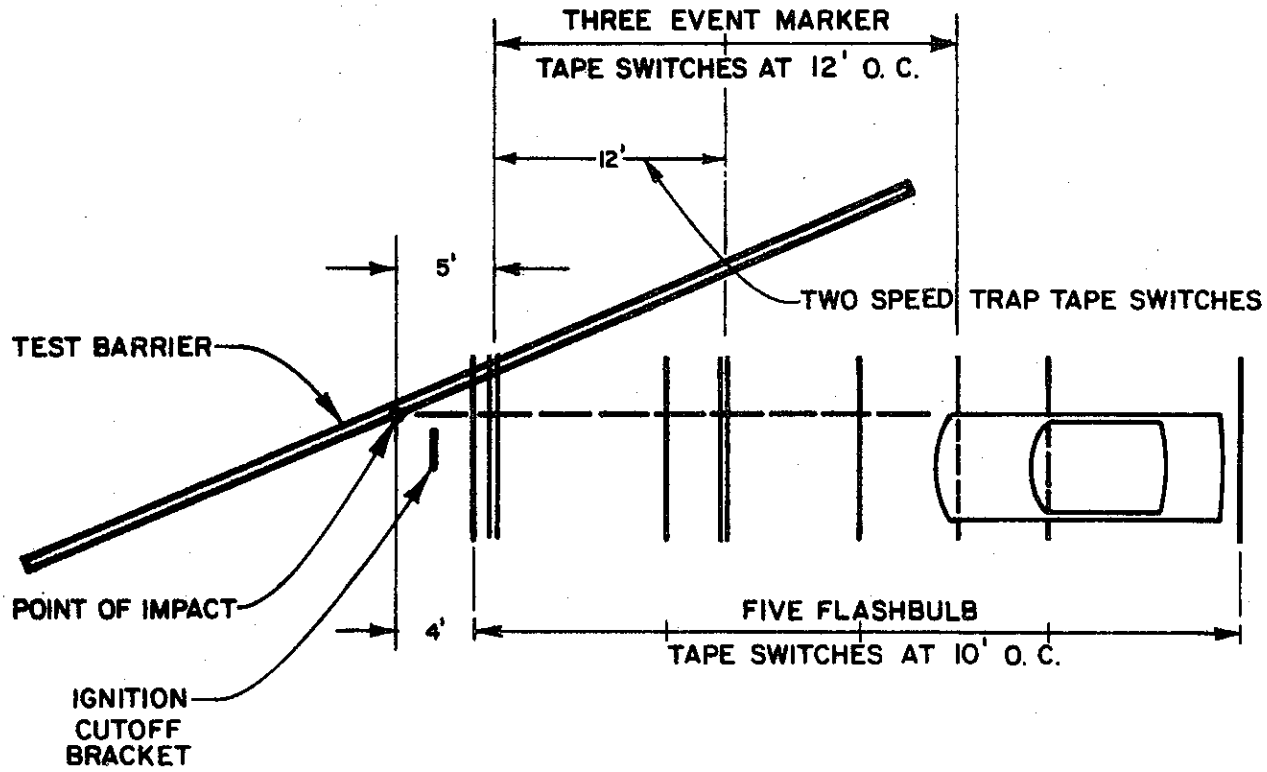

TAPE SWITCH LAYOUT
TESTS 411 & 412

FIGURE B2

ClibPDF - www.fastio.com

ClibPDF - www.fastio.com

APPENDIX C: Electronic Instrumentation and Data

Six accelerometers measured acceleration. Three unbonded strain gage accelerometers (Statham) were at the longitudinal and lateral center of gravity of the cars. One each was oriented in the longitudinal, lateral, and vertical direction. These accelerometers were mounted on a small rectangular steel plate which was bolted to another steel bracket that was welded to the floorboard. Figures A1 and A2 show the exact locations of these accelerometers. Table C1 gives information on the instrumentation. Figure C1 shows the sign conventions for the vehicle accelerometers. Three piezo-resistive accelerometers (Endevco) were mounted in the head cavity of the dummy. One each was oriented in the longitudinal, lateral, and vertical direction.

Data from the accelerometers in the test vehicle were transmitted through a 1000 foot Belden #8776 umbilical cable connecting the vehicle to a 14-channel Hewlett Packard 3924C magnetic tape recording system. This recording system was in an instrumentation trailer at the test control area.

Three pressure-activated tape switches were placed on the ground in front of the test barrier. They were spaced at carefully measured intervals of 12 feet. When the test vehicle tires passed over them, the switches produced sequential impulses or "event blips" which were recorded concurrently with the accelerometer signals on the tape recorder and served as "event markers". A tape switch on the front bumper of the car closed at the instant of impact and activated flash bulbs mounted on the car. The closure of the bumper switch also put a "blip" or "event marker" on

ClibPDF - www.fastio.com

TABLE C1 ACCELEROMETER, RATE TRANSDUCER, AND HOUSTON POTENTIOMETER INFORMATION

Channel Number	Test Number	Instrument Number	Range	Calib. Magnit.	Location	Orientation
1 HP	411	1029	100 g	39.84 g	Veh.c.g.	Long.
	412	588	50 g	20 g	Veh.c.g.	Vert.
2 HP	411	590	100 g	50 g	Veh.c.g.	Vert.
	412	590	100 g	50 g	Veh.c.g.	Lat.
3 HP	411	588	50 g	25.10 g	Veh.c.g.	Lat.
	412	1029	100 g	50 g	Veh.c.g.	Long.
4 HP	411-412	Roll	180°/sec	90°/sec	Veh.c.g.	Roll
5 HP	411-412	Pitch	90°/sec	60°/sec	Veh.c.g.	Pitch
6 HP	411-412	Yaw	180°/sec	90°/sec	Veh.c.g.	Yaw
7 HP	411-412	EW21	200 g	50 g	Dummy Head	Long.
8 HP	411-412	EW46	200 g	50 g	Dummy Head	Vert.
9 HP	411-412	EW69	200 g	50 g	Dummy Head	Lat.
12 HP	412	1	15 in.	5 in.	3x12 Rail	Lat.
2 PEM	411-412	2	15 in.	5 in.	Post 6	Lat.
4 PEM	411-412	3	15 in.	5 in.	3x12 Rail	Lat.
6 PEM	411-412	4	15 in.	5 in.	Post 7	Lat.
8 PEM	411-412	5	15 in.	5 in.	3x12 Rail	Lat.
10 PEM	411-412	6	15 in.	5 in.	4x4 Rail	Lat.

Notes:

1. Channels 1-12 HP were on the Hewlett Packard tape recorder. Channels 2-10 PEM were on the PEMCo tape recorder.
2. Houston potentiometer locations were as follows:
   1 Mid-height of 3x12 rail at expansion joint.
   2 Center of back flange of post 6 at 16 inches above deck.
   3 Mid-height of 3x12 rail next to post 6, 16 inches above deck.
   4 Center of back flange of post 7 at 16 inches above deck.
   5 Mid-height of 3x12 rail next to post 7, 16 inches above deck.
   6 Mid-height of 4x4 rail at midspan between posts 6 and 7
3. Accelerometer data were on Channels 1-3 HP and 7-9 HP; rate transducer data were on Channels 4-6 HP; and potentiometer data were on Channels 12 HP and 2, 4, 6, 8 and 10 PEM.

ClibPDF - www.fastio.com

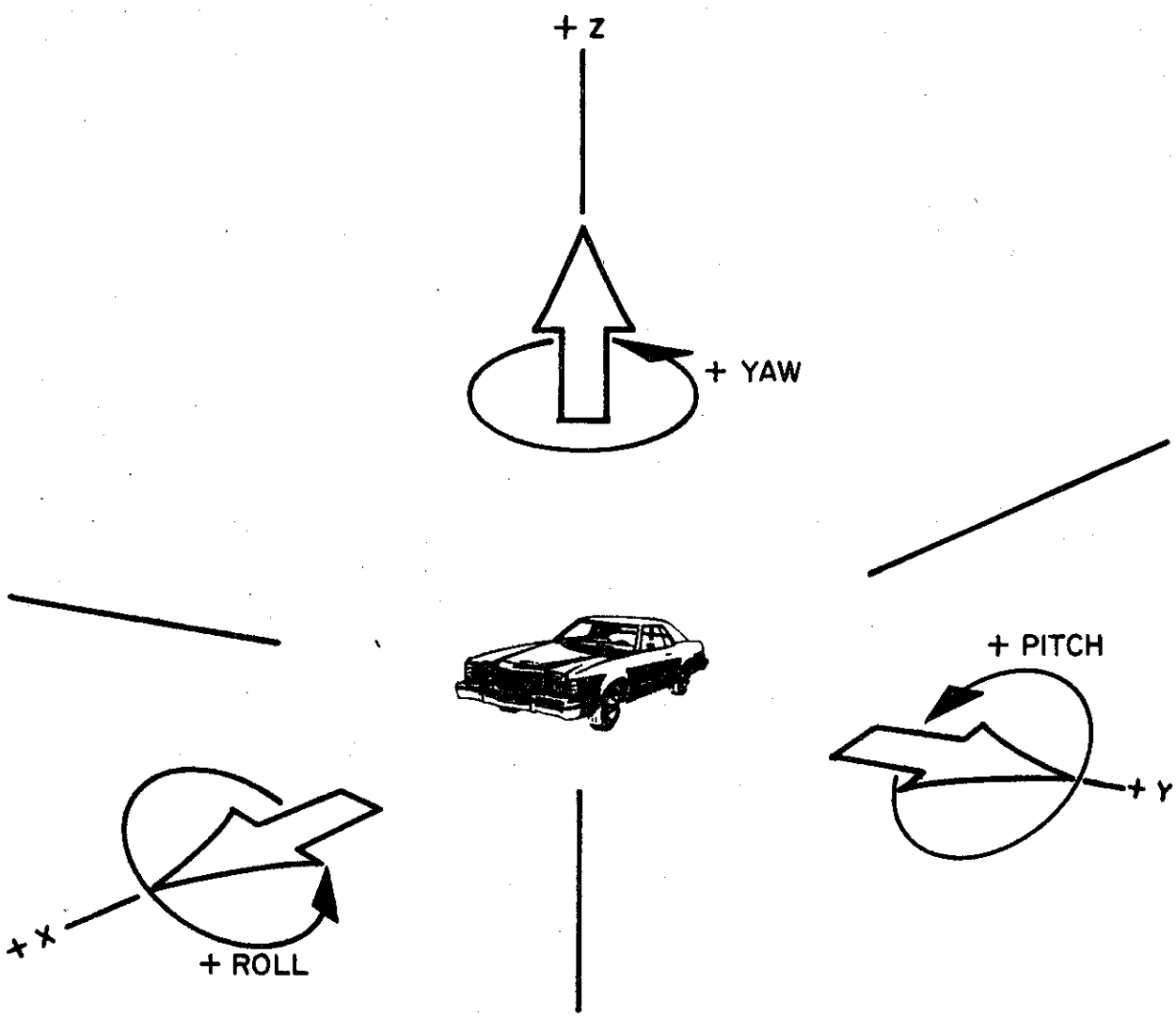

VEHICLE ACCELERATIONS SIGN CONVENTION

FIGURE C1

ClibPDF - www.fastio.com

the recording tape. A time cycle was recorded continuously on the tape with a frequency of 500 cycles per second. The impact velocity of the vehicle could be determined from the tape switch impulses and timing cycles. Two other tape switches connected to digital readout equipment were placed 12 feet apart just upstream from the test barrier specifically to determine the impact speed of the test vehicle immediately after the test. The tape switch layouts are shown in Appendix B in Figure B2.

After the test, the accelerometer data were played back from the tape recorder through a Visicorder which produced an oscillographic trace (line) on paper for each channel of the tape. Each paper record contained a curve of data from one accelerometer, signals from the event marker tape switches and bumper impact switch, and the time cycle markings.

Some of the data from the accelerometers mounted on the test vehicle contained high frequency spikes. All the test vehicle data were filtered at 100 hertz and 12 db per octave cutoff with a Krohn-Hite filter to facilitate data interpretation and reduction by hand. The smoother resultant curves gave a good representation of the overall acceleration of the vehicle without significantly altering the amplitude and time values of the acceleration pulses. The data from the accelerometers in the dummy's head were smoother and were not filtered.

The Visicorder paper records of accelerometer data served as a check on the main data reduction method described below.

ClibPDF - www.fastio.com

All accelerometer data were processed on a Norland Model 3001 waveform analyzer which was the primary means of data reduction. The analyzer digitized and manipulated the raw data, printed test results, and plotted various curves. These data curves are shown in Figures C2 through C5 and include the accelerometer records from the car and dummy for Tests 411 and 412.

Figures C6 through C9 show plots of the lateral and longitudinal components of velocity vs time and lateral and longitudinal displacement vs time for Tests 411 and 412. These plots were needed to calculate the occupant impact velocity defined in Reference 1.

The occupant impact velocity is theoretical; however, on the plot of distance vs time, the curves can be visualized as representing the car windshield and the driver's head. It is assumed that the head starts out two feet behind the windshield. The point where the curves cross represents the impact between the head and the windshield because the windshield has slowed down from the impact velocity, but the head has not. The time when the windshield/head impact occurs (rattlespace time) is carried to the plot of velocity vs time. The occupant impact velocity is the difference between the vehicle impact velocity and the vehicle velocity at the end of the rattlespace time.

(The dummy accelerometers are not used in determining the occupant impact velocity, only the vehicle accelerometers.)

ClibPDF - www.fastio.com

FIGURE C2 VEHICLE ACCELERATIONS TEST 411

TEST NUMBER
411.00
BRIDGE
RAILING
15 DEGREES
DEC. 3 1982

MAX. 50 MS
AVER. ACCEL.
FOR CAR (G)-

VERTICAL---
-.99138
FROM TIME(S)
.19100

LONGITUDINAL
-1.6433
FROM TIME(S)
4.2000E-02

LATERAL
4.9808
FROM TIME(S)
.10800

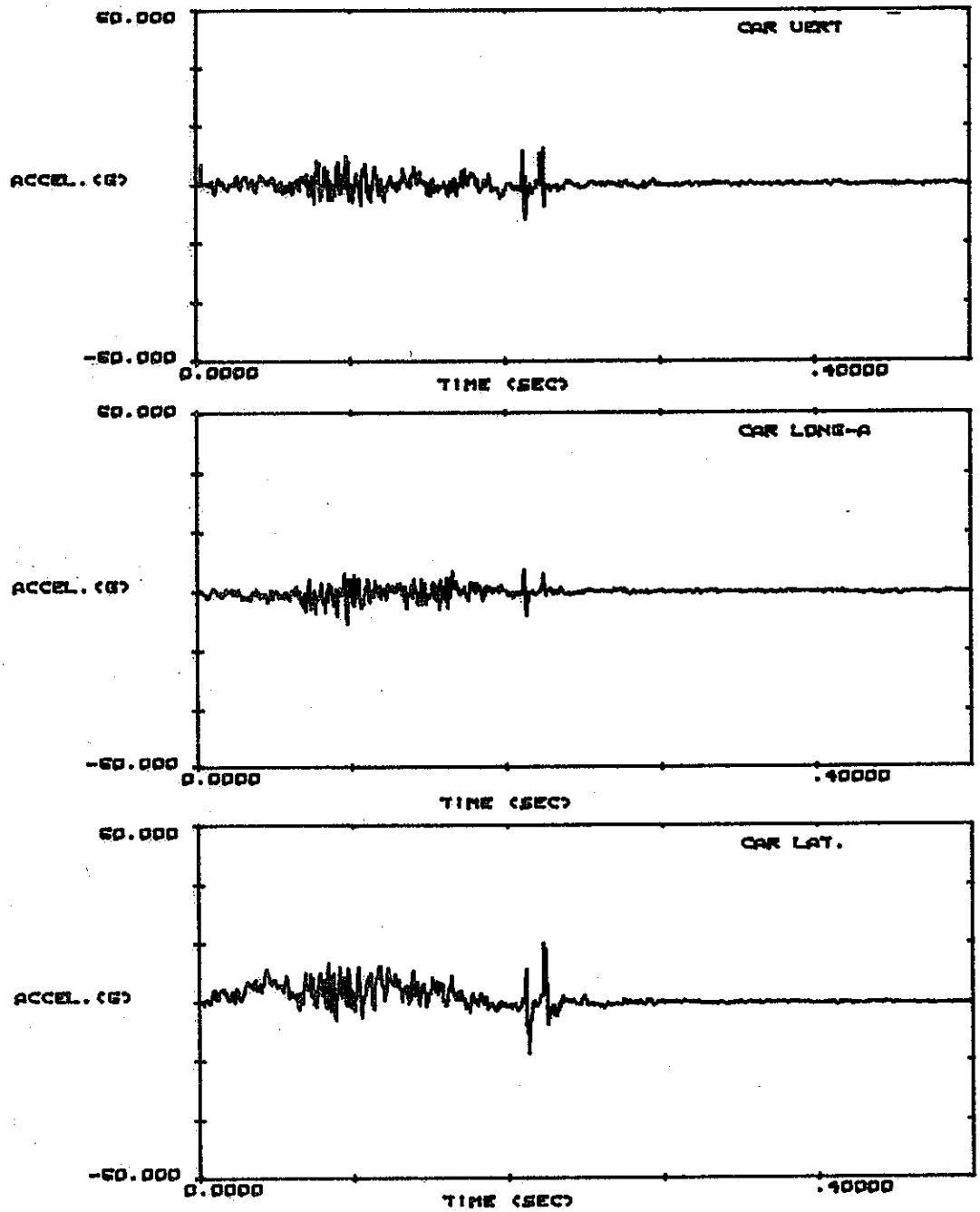

ClibPDF - www.fastio.com

FIGURE C3 DUMMY HEAD ACCELERATIONS TEST 411

TEST NUMBER
411.00
BRIDGE
RAILING

DEC. 3 1982

MAXIMUM
50 MS AVER.
DUMMY HEAD
RESULTANT
ACCEL. (G)-
17.474
FROM TIME(S)
.16950
TO TIME(S)
.21950

HEAD INJURY
CRITEREON-
64.996
FROM TIME(S)
.16950
TO TIME(S)
.22500

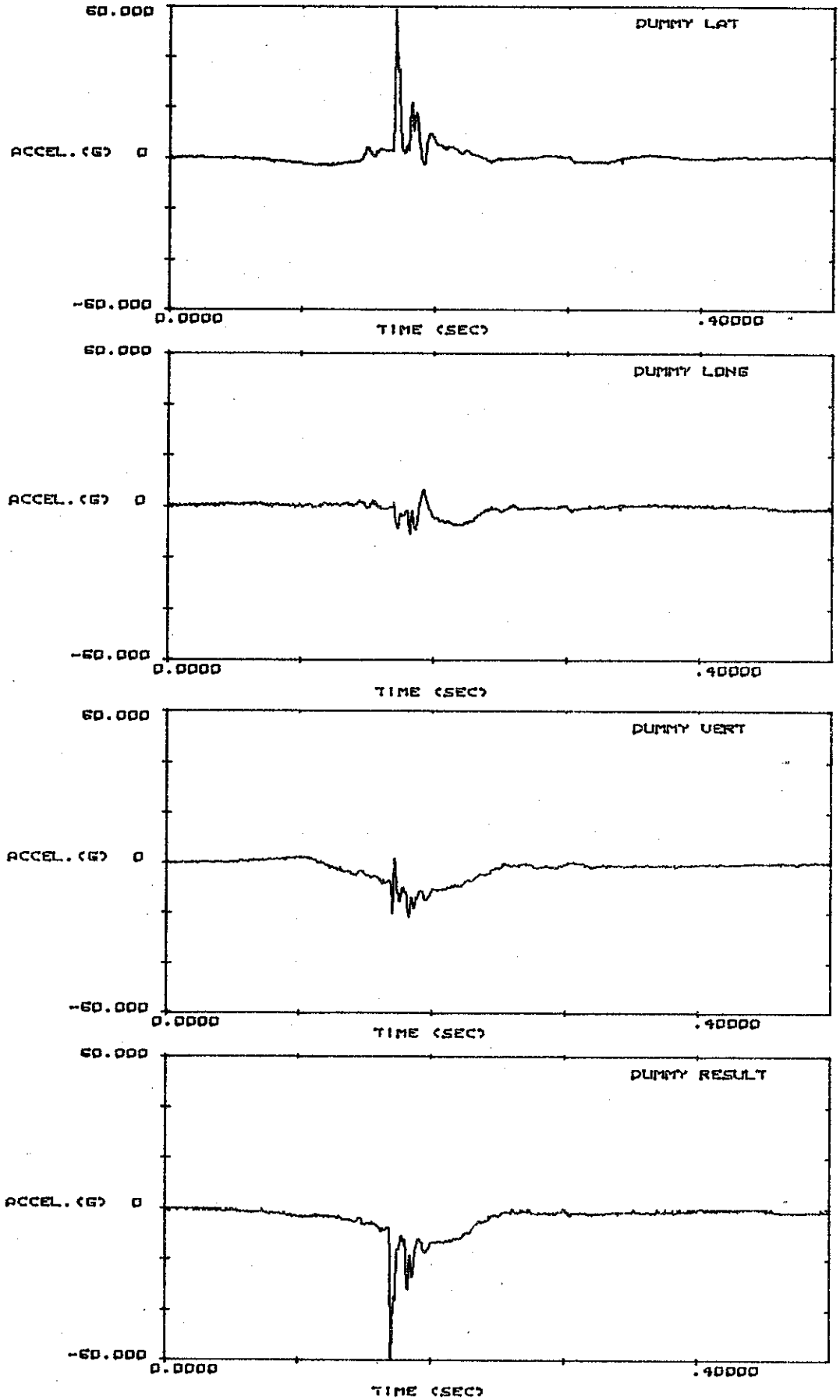

ClibPDF - www.fastio.com

FIGURE C4 VEHICLE ACCELERATIONS TEST 412

TEST NUMBER
412.00
BRIDGE-
RAILING
25 DEGREES
JAN. 11 1983

MAX. 50 MS
AVER. ACCEL.
FOR CAR (G)-

VERTICAL---
3.1632
FROM TIME(S)
.23100

LONGITUDINAL
-5.1425
FROM TIME(S)
7.4000E-02

LATERAL
9.4998
FROM TIME(S)
7.6000E-02

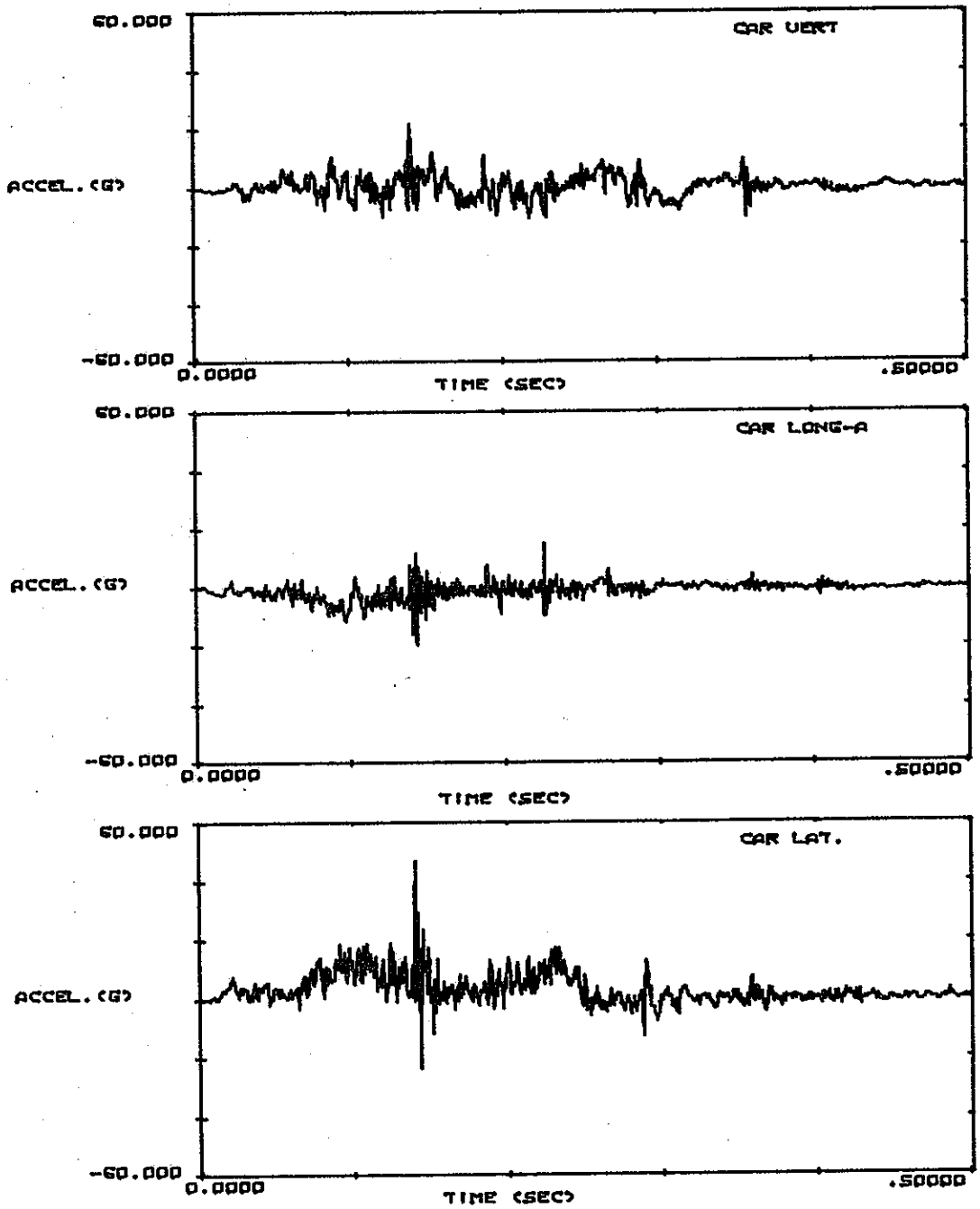

ClibPDF - www.fastio.com

FIGURE C5 DUMMY HEAD ACCELERATIONS TEST 412

TEST NUMBER
412.00
BRIDGE-
RAILING
25 DEGREES

JAN. 11 1983

MAXIMUM
50 MS AVER.
DUMMY HEAD
RESULTANT
ACCEL. (G)-
26.379
FROM TIME(S)
.19600
TO TIME(S)
.24600

HEAD INJURY
CRITEREON-
227.55
FROM TIME(S)
.19600
TO TIME(S)
.31900

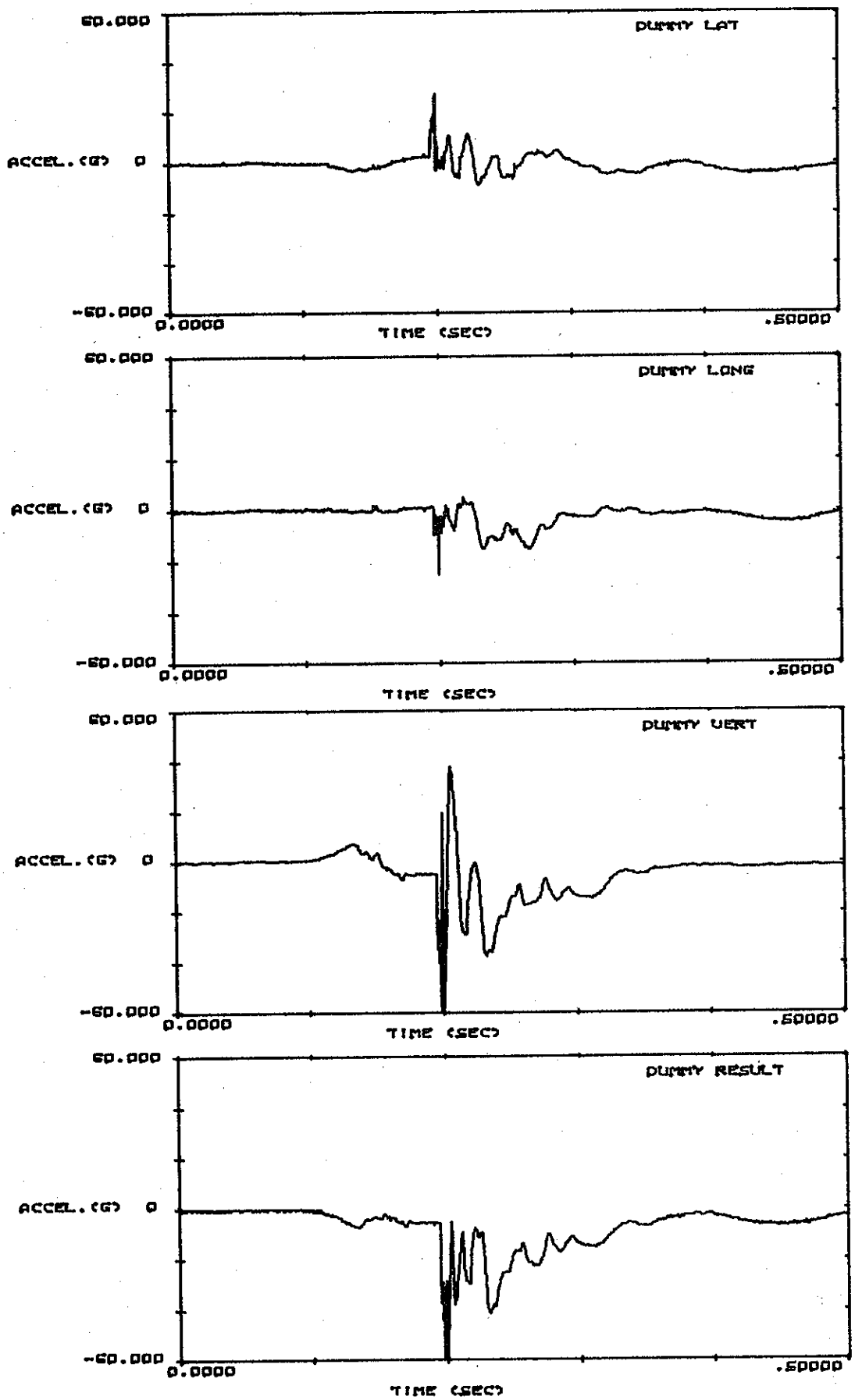

ClibPDF - www.fastio.com

FIGURE C6, TEST 411, VEHICLE LONGITUDINAL VELOCITY AND DISPLACEMENT VS TIME

TEST NUMBER
411.00
BRIDGE
RAILING
15 DEGREES
DEC. 3 1982

CAR IMPACT
VELOCITY
(FPS)-
87.560

AT CAR
DISTANCE(FT)
44.0
OCCUPANT
IMPACT
OCCURS

OCCUPANT
IMPACT
VELOCITY
(FPS)-
6.8
OCCURS AT
0.525
SEC. AFTER
CAR IMPACT

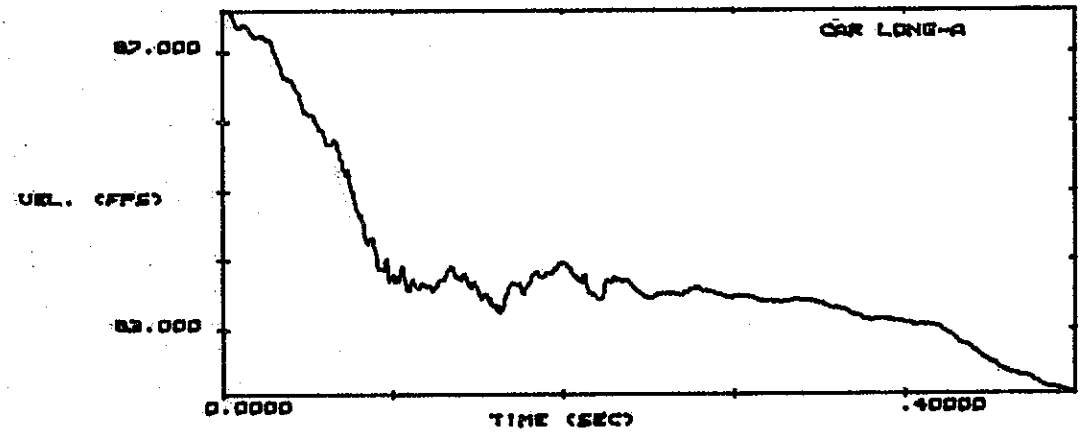

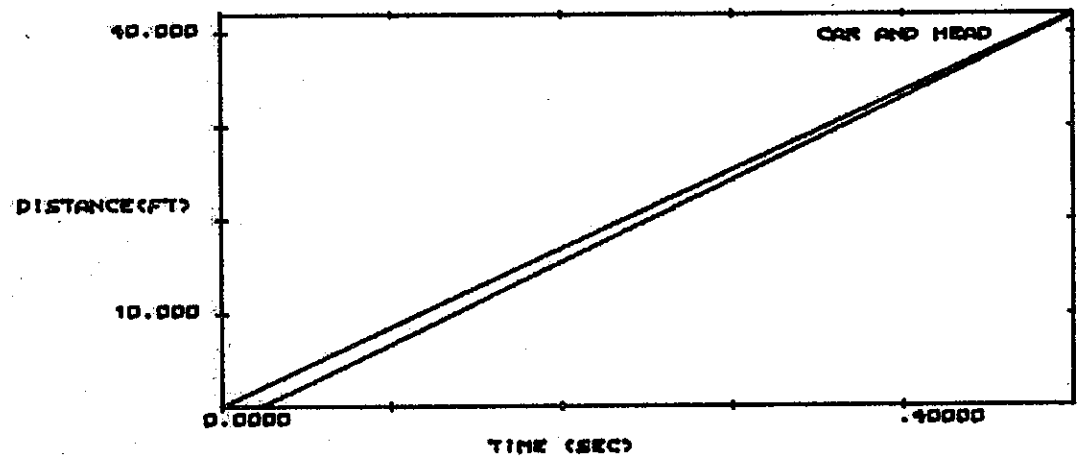

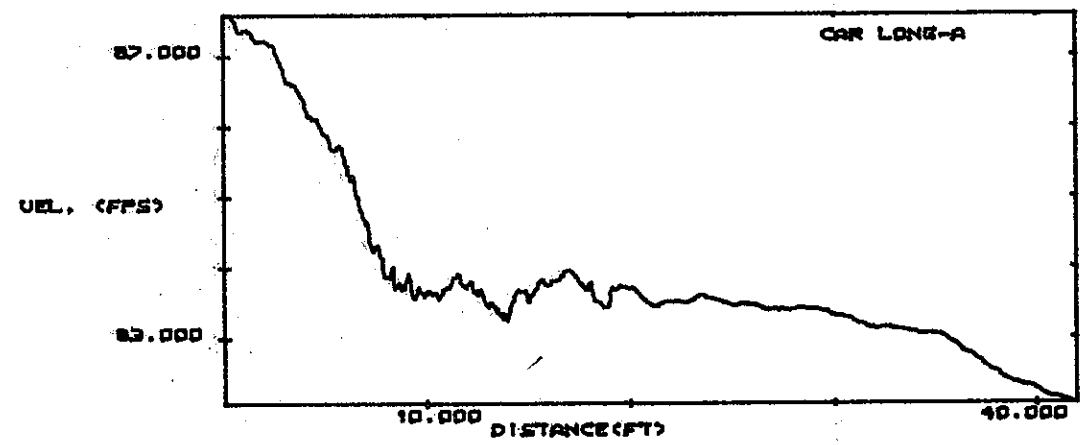

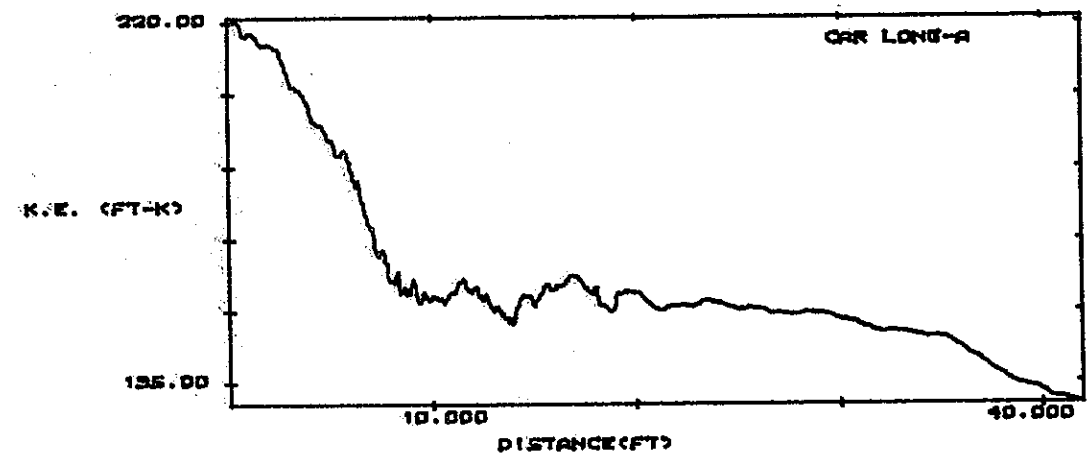

ClibPDF - www.fastio.com

FIGURE C7, TEST 412, VEHICLE LONGITUDINAL VELOCITY AND DISPLACEMENT VS TIME

TEST NUMBER
412.00
BRIDGE-
RAILING
25 DEGREES
JAN. 11 1983

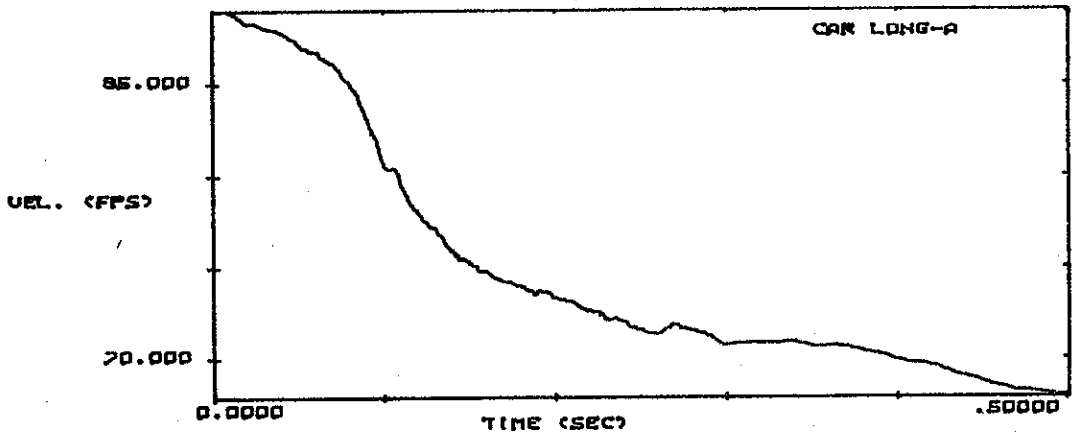

CAR IMPACT
VELOCITY
(FPS)-
89.025

AT CAR
DISTANCE(FT)
18.296

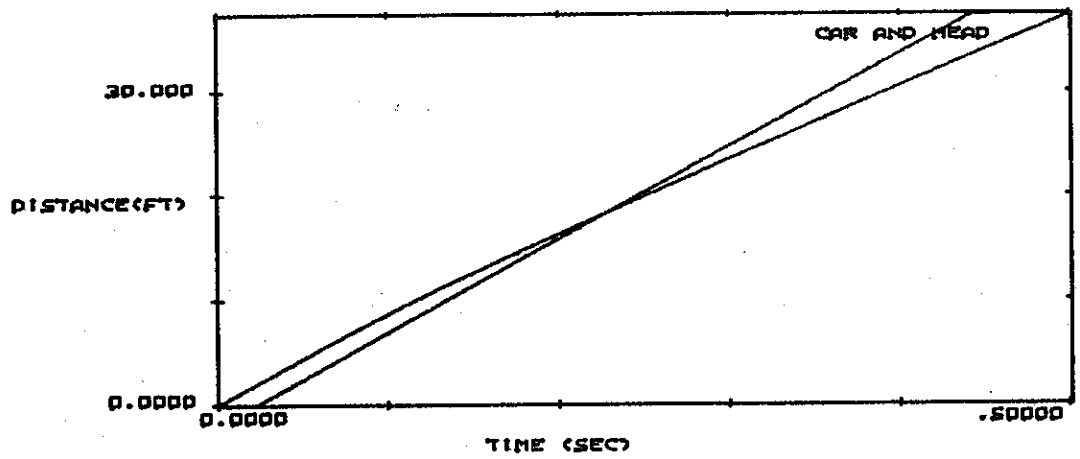

OCCUPANT
IMPACT
OCCURS

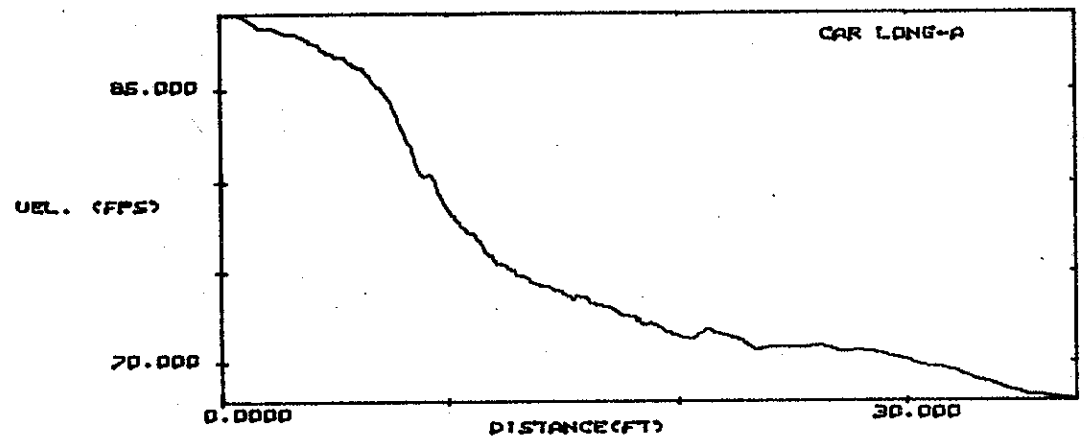

OCCUPANT
IMPACT
VELOCITY
(FPS)-
16.694
OCCURS AT
.22800
SEC. AFTER
CAR IMPACT

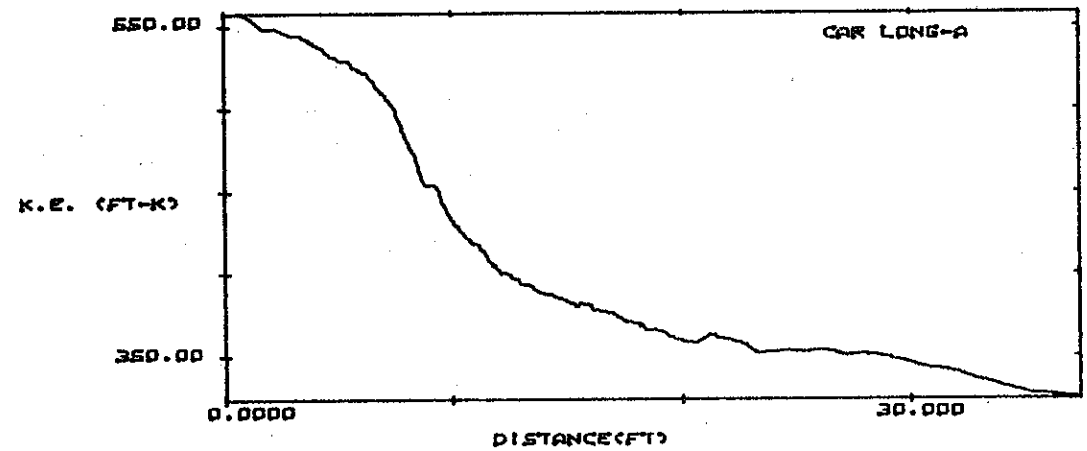

ClibPDF - www.fastio.com

TEST 411

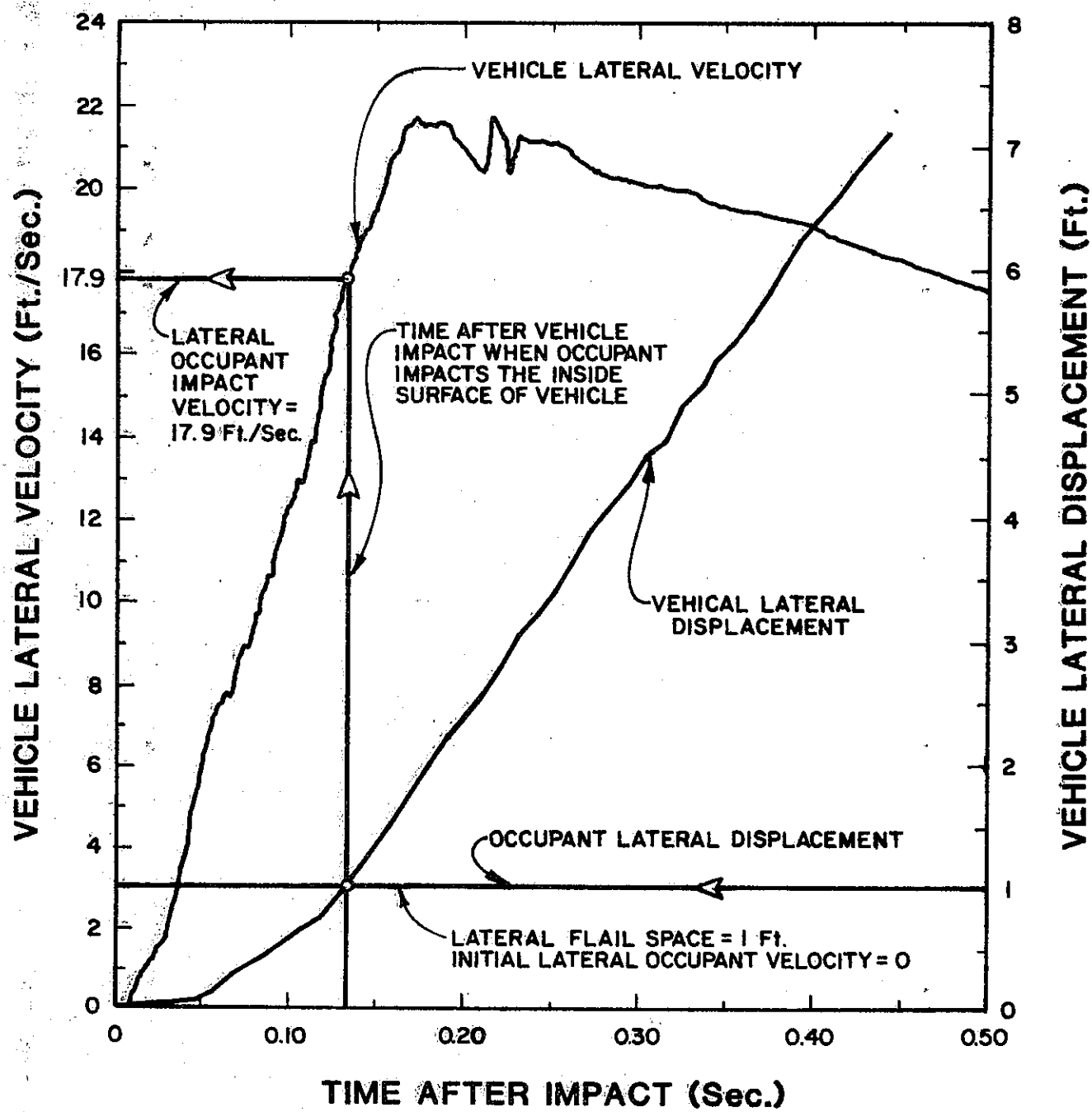

VEHICLE LATERAL VELOCITY AND DISPLACEMENT VS TIME

FIGURE C8

ClibPDF - www.fastio.com

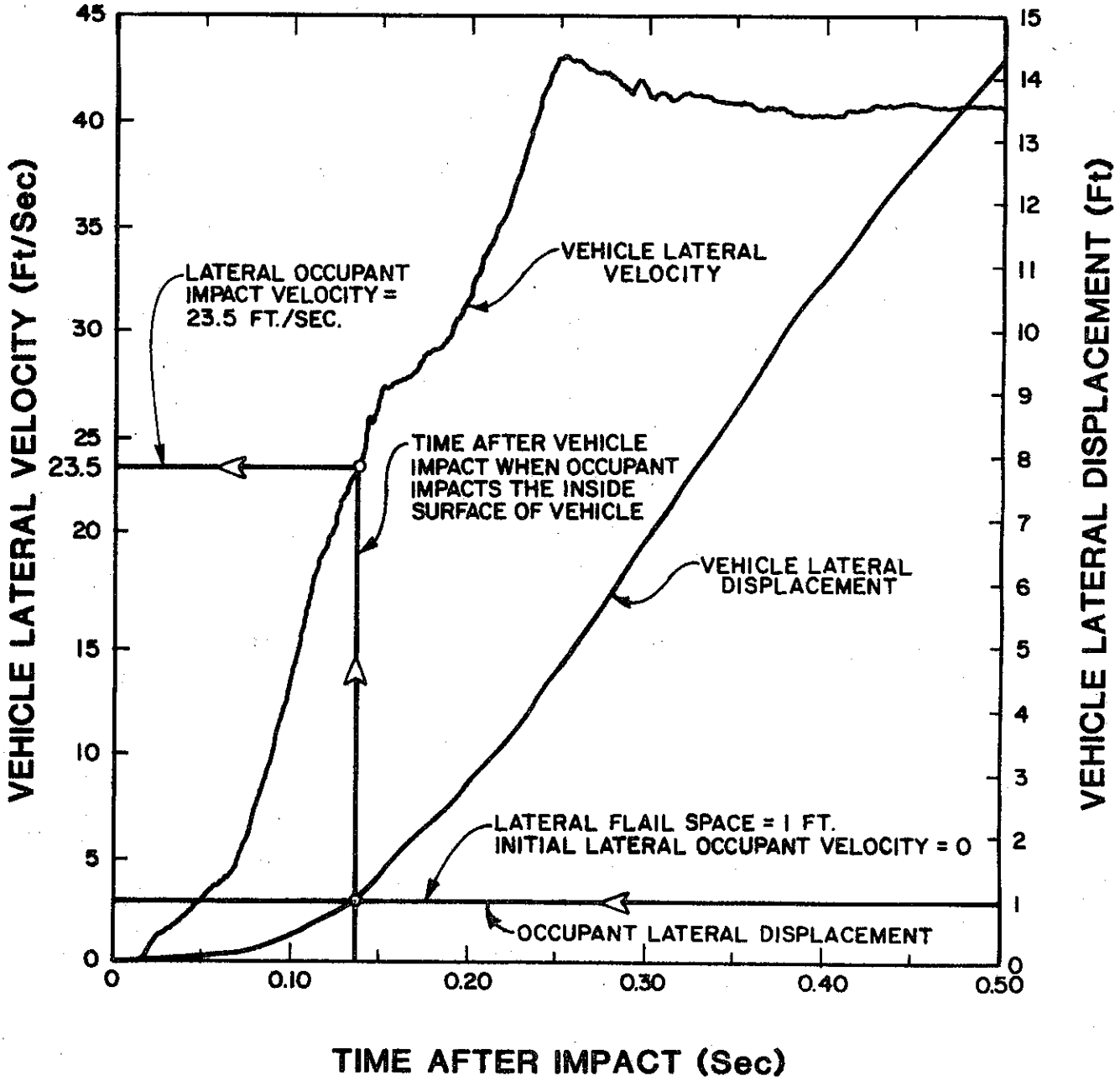

VEHICLE LATERAL VELOCITY AND DISPLACEMENT VS TIME

FIGURE C9

ClibPDF - www.fastio.com

The rate gyros assigned to channels 4, 5 and 6 (Table C1) were mounted next to the vehicle accelerometers. They measured the rate of angular change (angular velocity) of the vehicle in the roll, pitch, and yaw directions. Figure C1 shows the sign convention for the rate gyros. The data from these transducers were transmitted on the same umbilical cable as the vehicle and dummy accelerometers. The rate gyro data were integrated to obtain a curve of angle position versus time after impact so the maximum value of roll, pitch and yaw could be determined.

Houston potentiometers were assigned to the last six channels, Table C1. The potentiometers were intended to measure lateral deflection of the posts and rail near impact.

Heavy steel posts were driven vertically into the ground behind the test barrier near the point of impact. The potentiometers were attached to the posts and the cables were stretched out from them and attached to the back of the rails and posts at six points.

In Test 411, the cables from instruments number 3 and 5 snapped off the 3x12 rail and provided no data. The 4x4 rail did not move so there were no data from instrument number 6. The posts had no permanent deflection and less than one inch dynamic deflection.

In Test 412, all cables remained attached; however, the lateral velocity of the rails and posts exceeded the ability of the potentiometers to retract the cables which were held taut by springs. Thus, it was concluded these potentiometers were marginal or ineffective in recording dynamic deflections accurately for 60 mph impacts.

ClibPDF - www.fastio.com

APPENDIX D: Static Tests on Collapsing Rings and Bridge Rail Component Samples

Before the crash tests were conducted, static tests were completed on three variations of the collapsing ring. These tests were helpful in estimating the energy that might be absorbed by the rings during crash tests.

Figure D1 shows the test specimen dimensions and Figure D2 shows the assembled test specimen and the test setup. A Baldwin Universal Testing Machine with a 440,000 lb load capacity was used at a travel rate of two inches per minute. Figures D3-D5 show the test specimens at various stages of crushing. Figure D6 shows the curves of load vs deflection. Figures D7-D9 show the results of tensile strength tests on specimens from the collapsing ring components.

Sample No. 1 was identical to the components used in the crash test barrier with one exception. The pipe used in the static tests was A53 Grade B rather than Grade A because it was more readily available than Grade A in the short time available to conduct the static tests. Sample No. 2 was the same as Sample No. 1 except the holes in the 1/2 inch plates were enlarged so the ring would project farther into them. Thus, the rings could be loaded like the theoretical analysis assumes with line loads 180° apart. Sample No. 3 was tested to compare an 8"x8" tube with an 8" diameter pipe.

The load vs deflection curves for Sample Nos. 1 and 2 were quite similar. Sample No. 2 was a little stiffer, perhaps because the moment arm for bending was shorter due to the

ClibPDF - www.fastio.com

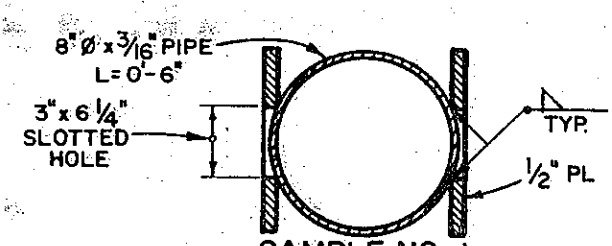

SAMPLE NO. 1
PIPE AND PLATES

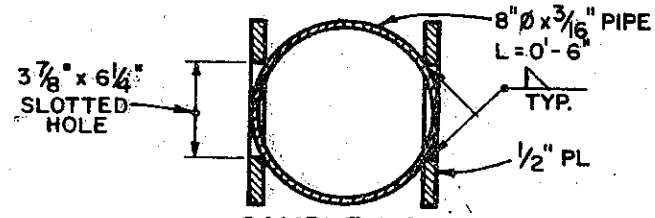

SAMPLE NO. 2
PIPE AND PLATES

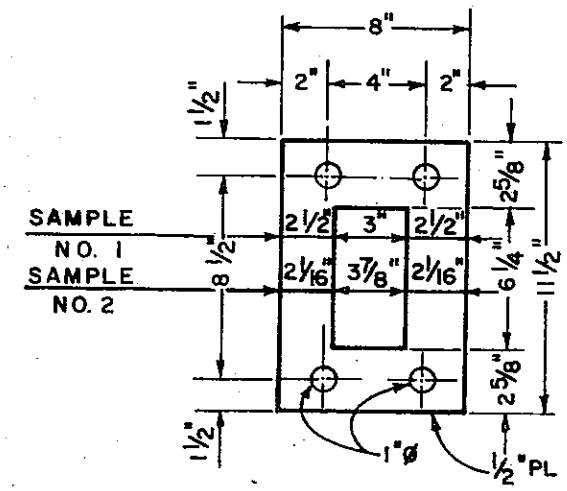

SAMPLES NO. 1 & 2
PLATE

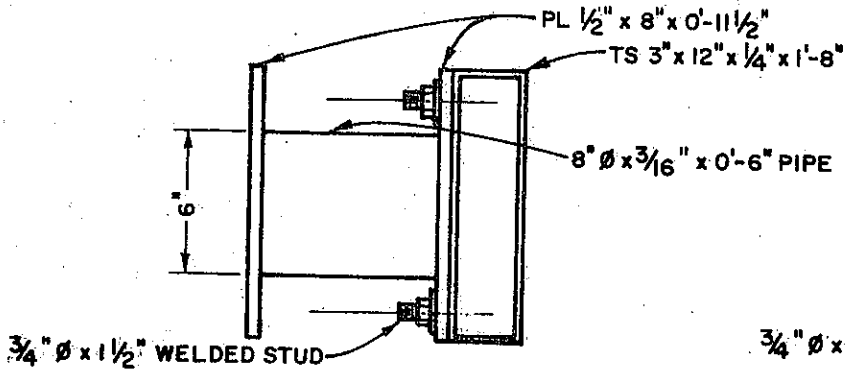

SIDE VIEW

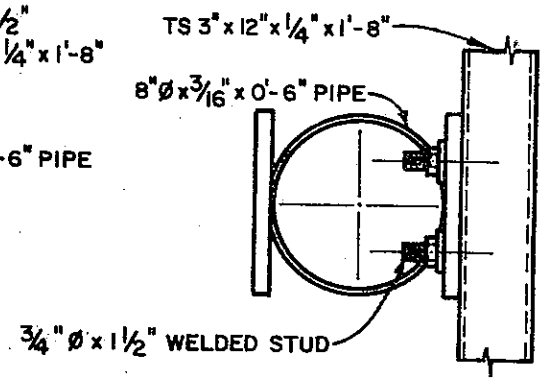

TOP VIEW

ASSEMBLED SAMPLES NO. 1 & 2

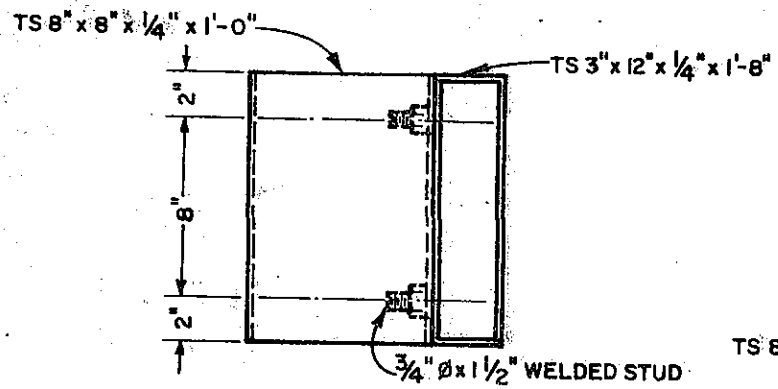

SIDE VIEW

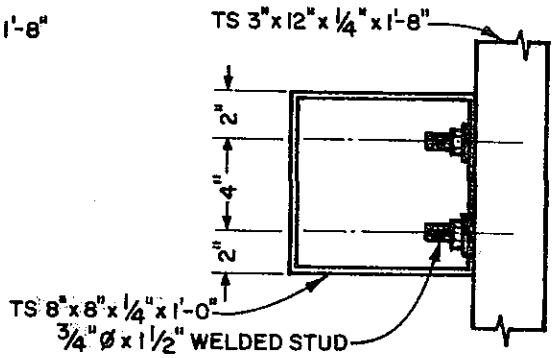

TOP VIEW

ASSEMBLED SAMPLE NO. 3

COLLAPSING RING STATIC TESTS
TEST SPECIMEN DIMENSIONS

FIGURE D1

ClibPDF - www.fastio.com

FIGURE D2 SAMPLE NO. 1 AND TEST SETUP

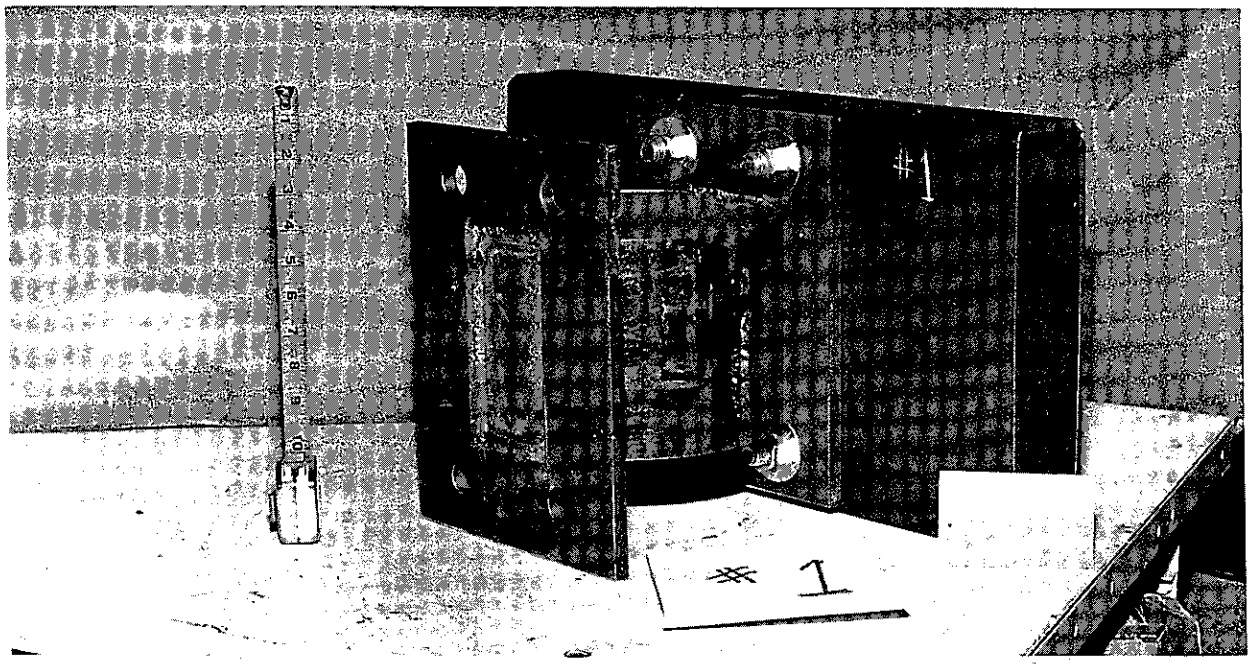

Sample No. 1 Before Test

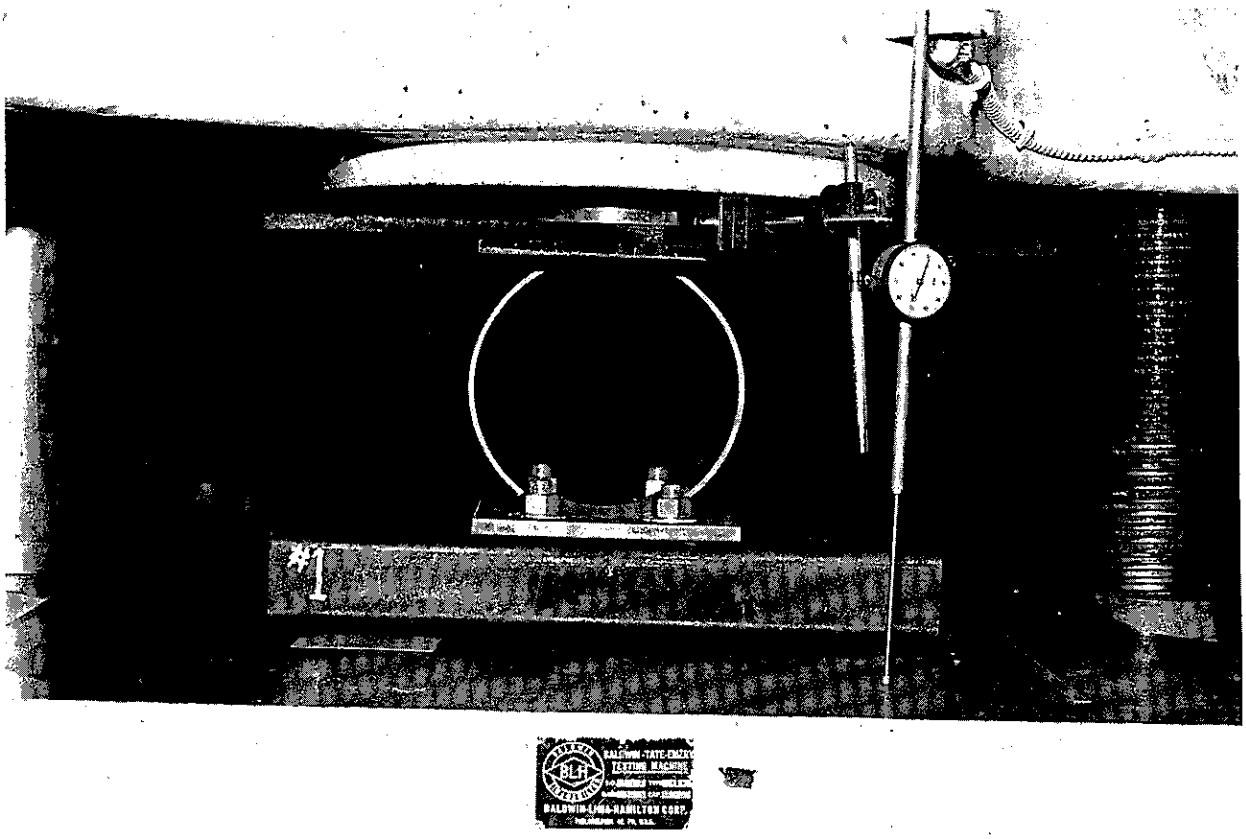

Sample No. 1 in Test Machine

ClibPDF - www.fastio.com

FIGURE D3 TEST SAMPLE NO. 1 DURING STATIC TEST

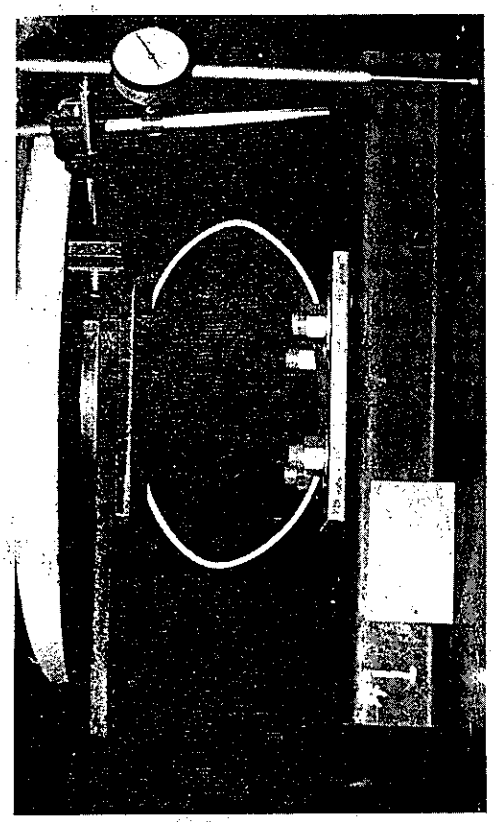

Load = 4120 lb. Deflection = 2.4 in.

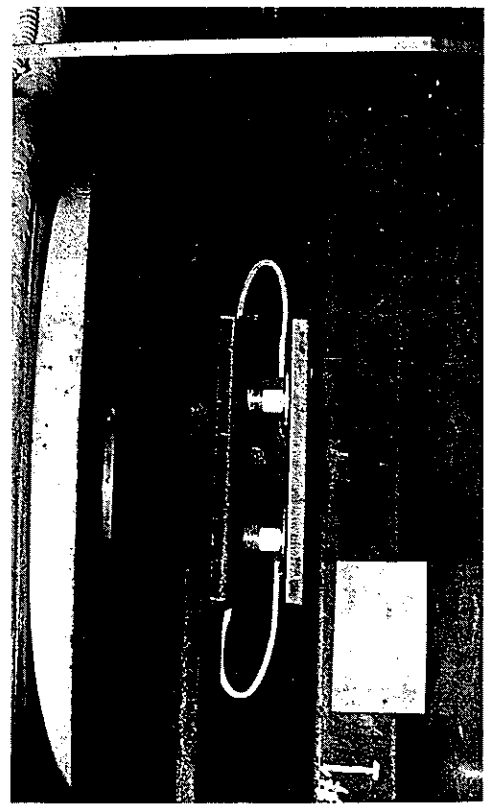

Load = End of Test Deflection = 7.6 in.

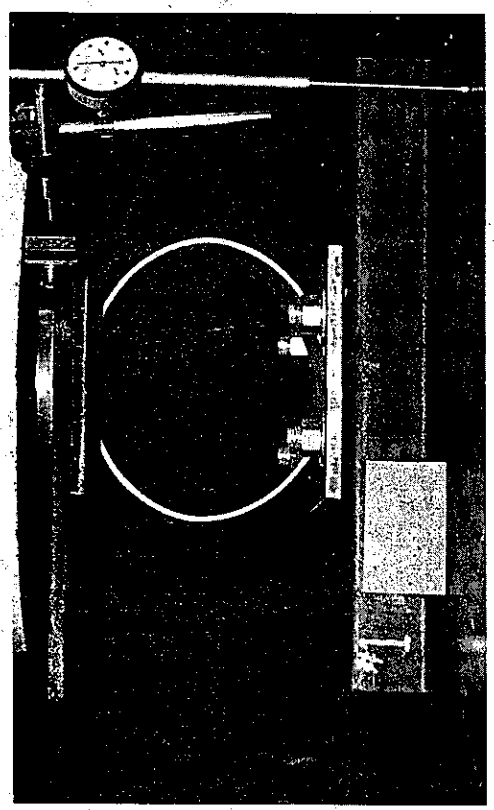

Load = 4230 lb. Deflection = 0.8 in.

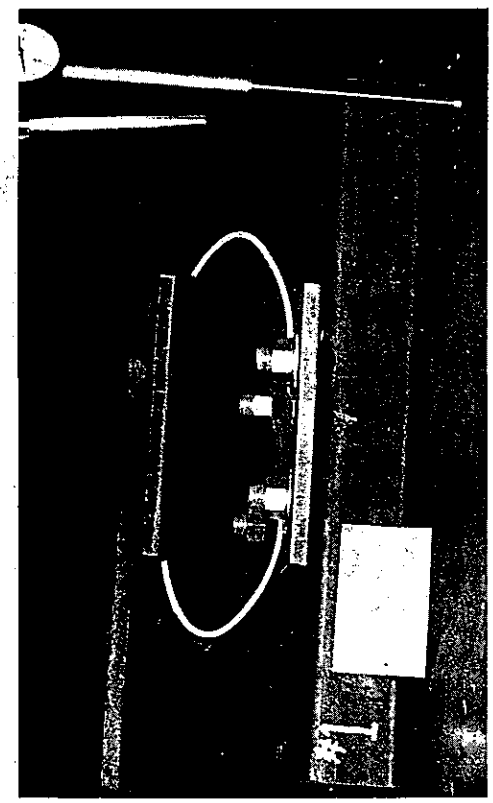

Load = 4820 lb. Deflection = 5.0 in.

ClibPDF - www.fastio.com

FIGURE D4 SAMPLE NO. 2 DURING STATIC TEST

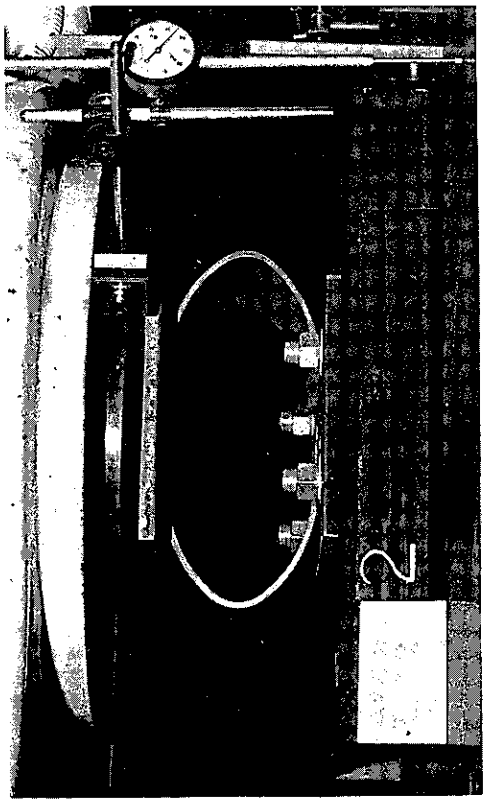

Load = 4680 lb. Deflection = 2.8 in

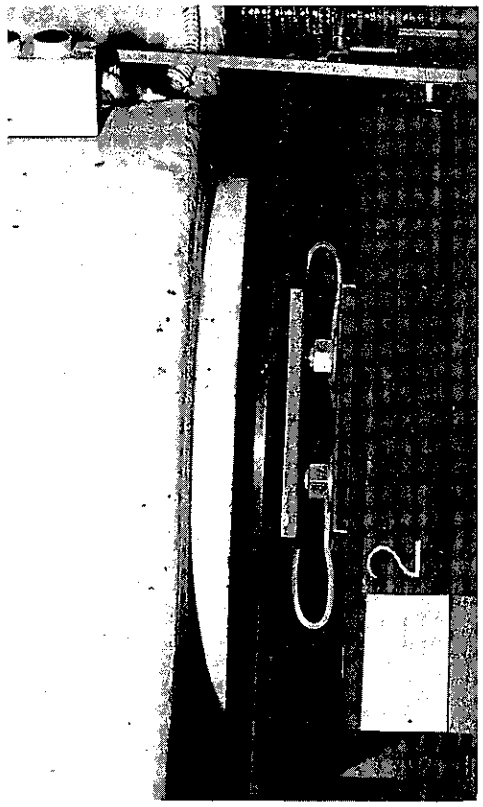

Load = Deflection = End of Test

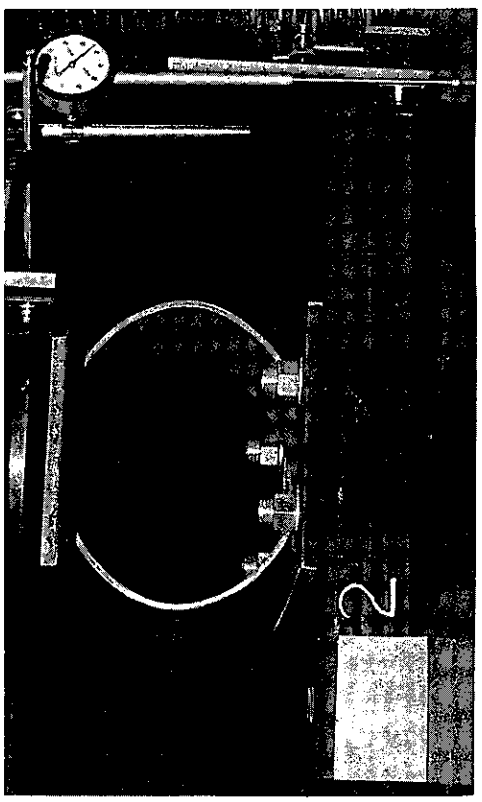

Load = 5380 lb. Deflection = 0.8 in.

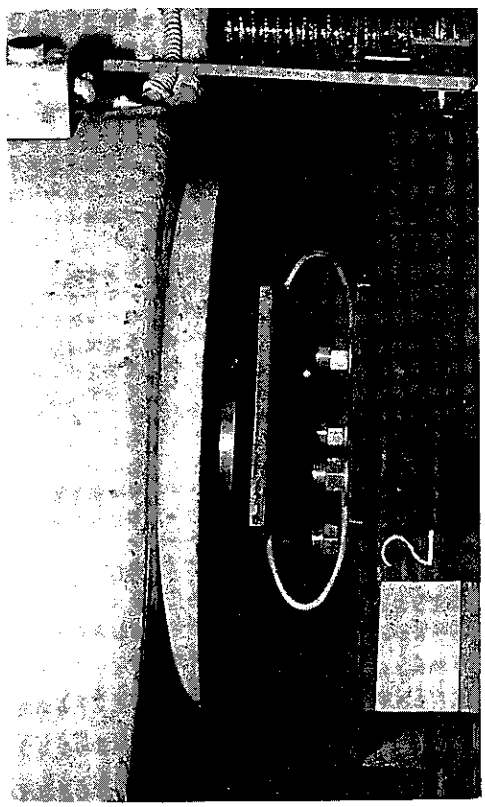

Load = 5350 lb. Deflection = 5.1 in.

ClibPDF - www.fastio.com

FIGURE D5 SAMPLE NO. 3 DURING STATIC TEST

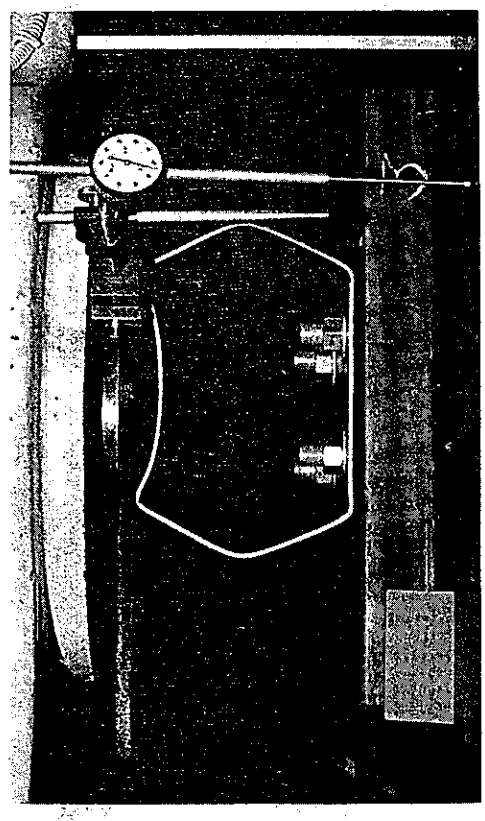

Load = 13,700 lb. Deflection = 1.2 in.

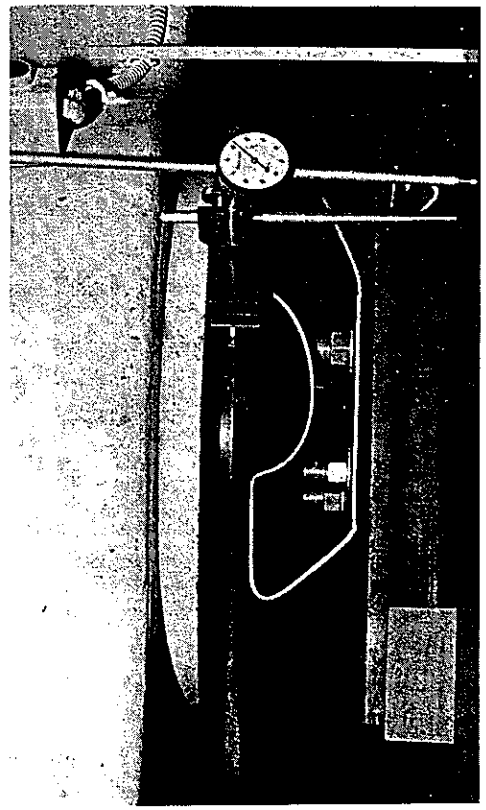

Load = End of Test Deflection = 7.2 in.

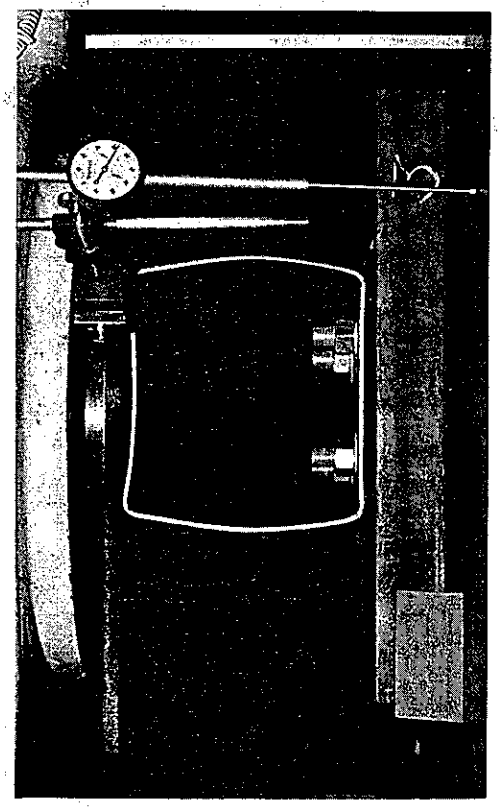

Load = 25,500 lb. Deflection = 0.4 in.

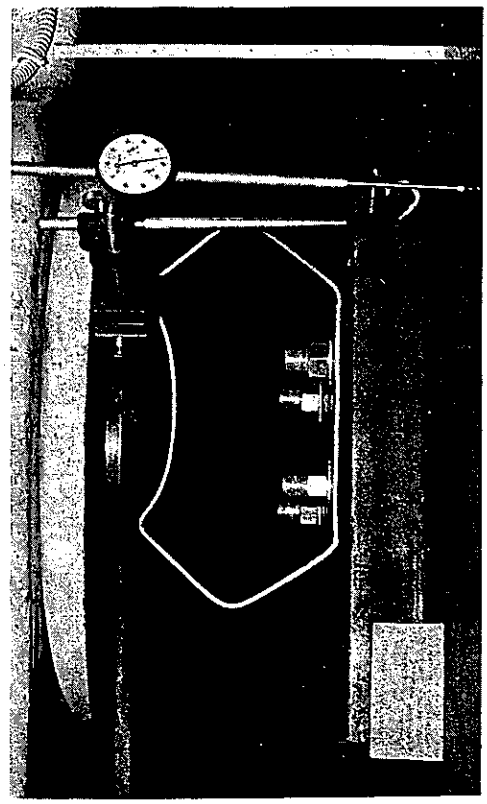

Load = 10,900 lb. Deflection = 2.0 in.

ClibPDF - www.fastio.com

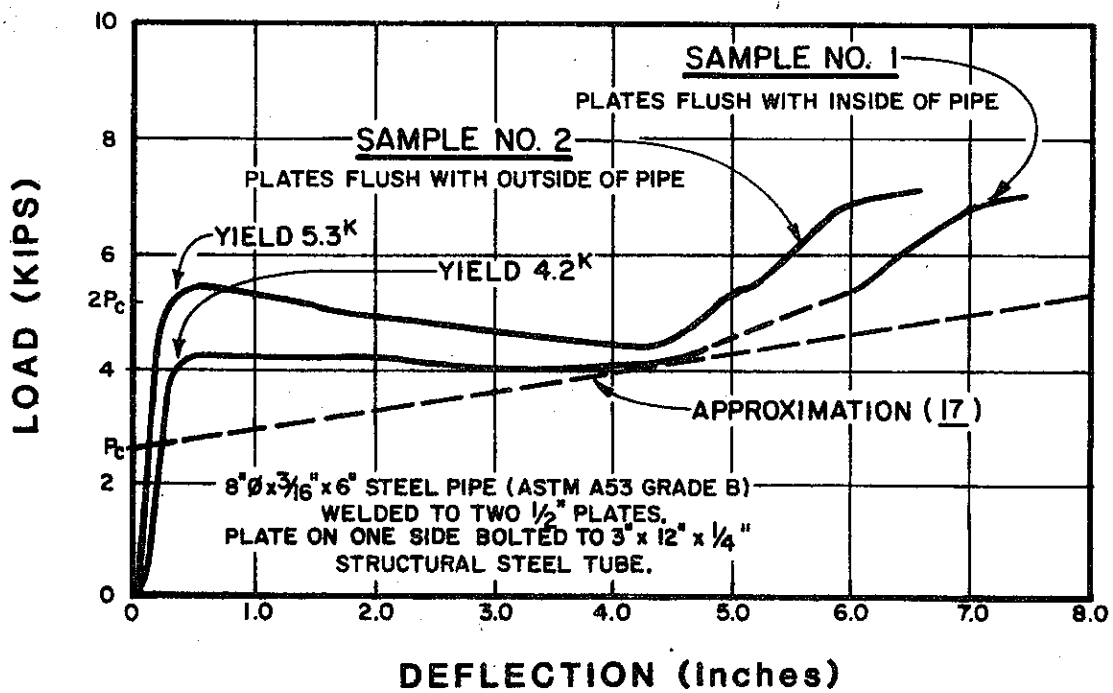

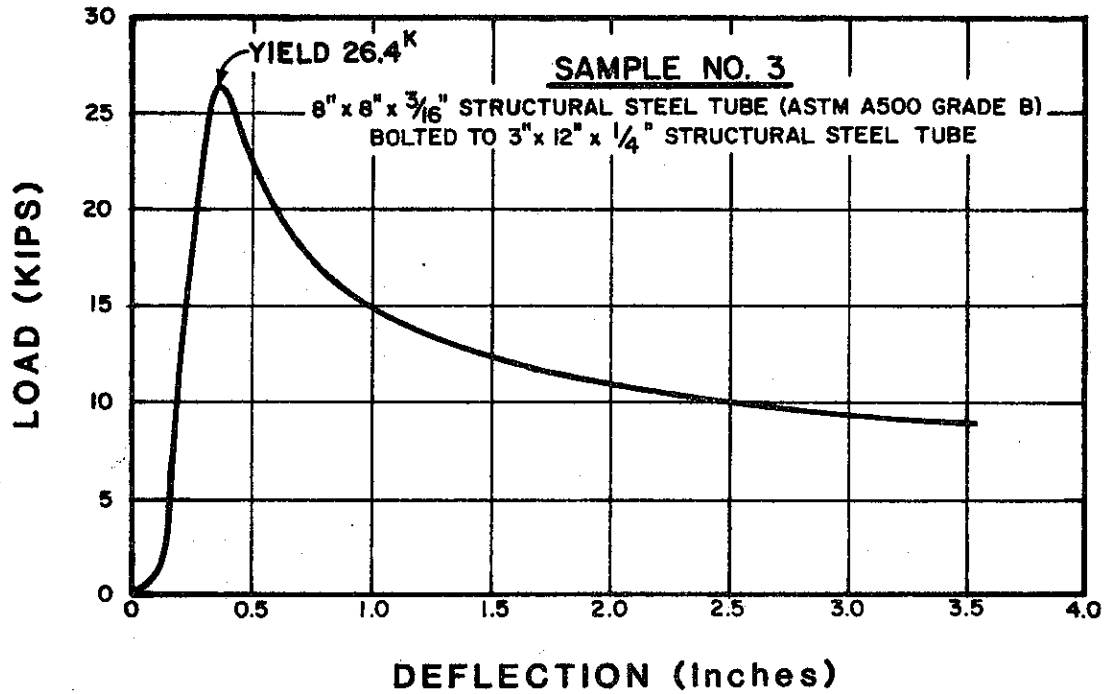

LOAD VS DEFLECTION
8" Ø x 3/16" PIPE AND 8" x 8" x 3/16" TUBE

FIGURE D6

ClibPDF - www.fastio.com

State of California
Department of Transportation
TRANSPORTATION LABORATORY

S. M. No.	Date Received
T 101 No.	Cont., W.O., or P.O. No.
Lot No.	F.A.P. No.

REPORT OF TESTS ON Tensiles- Collapsing Ring Material - Static Tests

District	County	Route	P.M.	Agency	Sampled By	Date Sampled

Contractor: | Manufacturer: | Source of Supply: Pacific Pipe Co. Oaklan

Report To: Los Angeles ☐ Berkeley ☐ Sacromento ☐ Res. Engr. ☐ D.M. Engr. ☐

MATERIAL TESTED FOR: 8"ø x 3/16" pipe A53 GRADE B; 1/2" & 1-1/2" Samples; Research #636966

Sample No.	Sample Type	Heat No.	Size	Area Before	Area After	Yield Point Actual ~~kips~~	Yield Point ~~psi~~ ksi	Ultimate Actual ~~kips~~	Ultimate ~~psi~~ ksi	Elong. in %	Red. Area %	Cold Bend	Chemical Analysis C	Mn	P	S	Si	A or R
1			.189 .503	.095		4.62	48.63	6.119	64.41	34								
2			.190 .503	.096		4.66	48.54	6.183	64.41	34								
3			.193 .503	.097		4.74	48.81	6.241	64.34	32.5								
1			.193 1.503	.290		14.85	51.21	18.700	64.48	34								
2			.193 1.504	.290		15.25	52.59	18.750	64.66	32								
3			.191 1.504	.287		14.55	50.70	18.600	64.81	35								

SPECIFICATIONS

REMARKS

DATE TESTED: 10/26/82

TESTED BY: John Dautel

APPROVED BY:

TL-619 (Rev.1-77)

FIGURE D7

ClibPDF - www.fastio.com

FIGURE D8

State of California
Department of Transportation
TRANSPORTATION LABORATORY

S. M. No.	Date Received
T 101 No.	Cont., W.O., or P.O. No.
Lot No.	F.A.P. No.

REPORT OF TESTS ON Tensile - Collapsing Ring Material - Static Tests

District	County	Route	P.M.	Agency	Sampled By	Date Sampled

Contractor	Manufacturer	Source of Supply
		Industrial Tube & Steel San Jose

REPORT TO: Los Angeles, Berkeley, Sacramento, Res. Engr., D.M. Engr.

MATERIAL TESTED FOR: TS8"x8"x3/16" A500 GRADE B; 1/2" & 1-1/2" samples; Research #636966

Sample No.	Sample Type	Heat No.	Size	Area Before	Area After	Yield Point Actual kips	Yield Point ~~PSI~~ ksi	Ultimate Actual kips	Ultimate ~~PSI~~ ksi	Elong. in %	Red. Area %	Cold Bend	Chemical Analysis C	Mn	P	S	Si	A or R
1			.168 .504	.085		3.99	47.12	4.985	58.85	35								
2			.170 .504	.086		3.95	45.93	5.000	58.14	36								
3			.170 .503	.086		4.02	46.74	5.002	58.16	34								
1			.170 1.505	.256		13.400	52.34	15.300	59.77	39								
2			.170 1.505	.256		13.000	50.78	15.350	59.96	39								
3			.171 1.506	.258		12.800	49.61	15.350	59.50	38								

SPECIFICATIONS

REMARKS

DATE TESTED: 10/26/82

TESTED BY: John Dautel

APPROVED BY:

TL-619 (Rev.1-77)

ClibPDF - www.fastio.com

State of California
Department of Transportation
TRANSPORTATION LABORATORY

S. M. No.	Date Received
T 101 No.	Cont., W.O., or P.O. No.
Lot No.	F.A.P. No.

REPORT OF TESTS ON Tensiles - Collapsing Ring Material - Static Tests

District	County	Route	P.M.	Agency	Sampled By	Date Sampled

Contractor:
Manufacturer:
Source of Supply: Industrial Tube & Steel San Jose

Report To: Los Angeles ☐ Berkeley ☐ Sacramento ☐ Res. Engr. ☐ D.M. Engr. ☐

MATERIAL TESTED FOR: TS3"x12"x1/4" A500 - GRADE B; 1/2"&1-1/2" Samples; Research #636966

Sample No.	Sample Type	Heat No.	Size	Area Before	Area After	Yield Point Actual kips	Yield Point ~~PSI~~ ksi	Ultimate Actual kips	Ultimate ~~PSI~~ ksi	Elong. in %	Red. Area %	Cold Bend	Chemical Analysis C	Mn	P	S	Si	A or R
1			.505 .234	.118		6.01	50.93	9.237	78.28	36								
2			.504 .234	.118		5.68	48.14	9.075	76.91	34.5								
3			.504 .234	.118		6.07	51.44	9.308	78.88	29								
1			.233 1.509	.352		16.600	47.16	26.350	74.86	38								
2			.233 1.509	.352		16.800	47.73	26.750	75.99	37								
3			.237 1.509	.358		22.300	62.29	28.950	80.87	34								

SPECIFICATIONS

REMARKS

DATE TESTED: 10/26/82
TESTED BY: John Dautel
APPROVED BY:

TL-619 (Rev.1-77)

FIGURE D9

ClibPDF - www.fastio.com

ring projecting farther into the holes in the 1/2 inch plates. Sample No. 3 was much stiffer than the other two. The square tube would not be practical for a collapsing ring. There was no bending or damage apparent in the 3x12 tubes, bolts or 1/2 inch plates in Sample Nos. 1-3.

The test specimens from the collapsing ring components all met the ASTM minimum strength requirements which are as follows:

Specification	Yield Strength (psi)	Tensile Strength (psi)	% Elongation in 2 in.
A53 Grade A	30,000	48,000	1/2" specimen 24% 1 1/2" specimen 30%
A53 Grade B	35,000	60,000	1/2" specimen 19 1/2% 1 1/2" specimen 24 1/2%
A500 Grade B	46,000	58,000	23%

Figure D10 is a plot of energy absorbed vs displacement for Samples No. 1 and No. 2. It shows the energy absorbed in the static test specimens and also the predicted energy absorbed in the rings during a crash test assuming a dynamic magnification factor of 1.6(17). The "approximation" shown in Figures D6 and D10 was based on the following expression from Reference 17,

$$P_c = \frac{f_y W t^2}{R} = \frac{50{,}000(6)(3/16)^2}{4} = 2640 \text{ lb}$$

ClibPDF - www.fastio.com

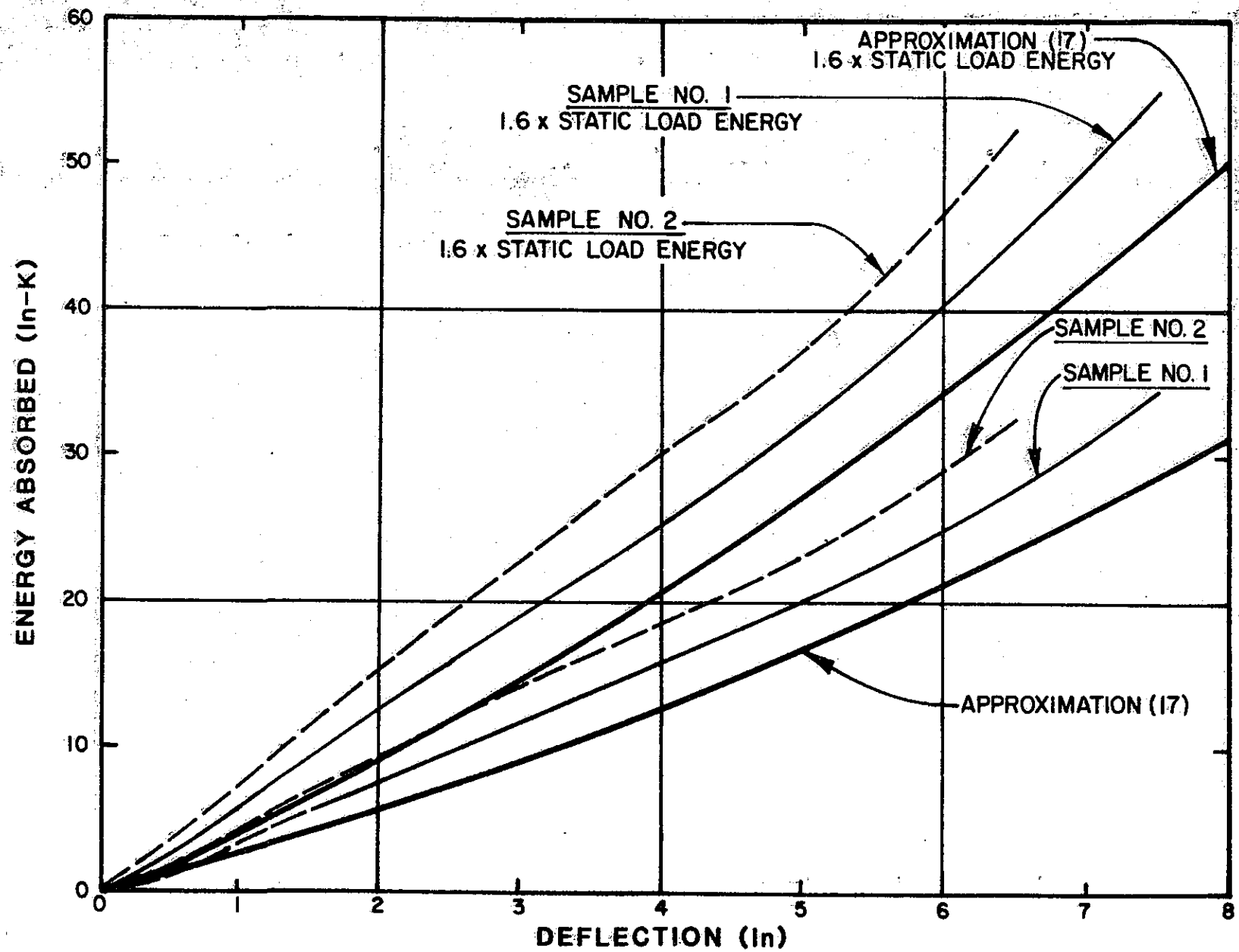

ENERGY ABSORBED vs DEFLECTION
STATIC TESTS ON COLLAPSING RINGS

FIGURE D10

ClibPDF - www.fastio.com

where:

P_c = small deflection collapse load, lbs

f_y = static yield stress, psi (approximately 50,000 psi for materials used in static tests)

W = ring height, inches

t = ring thickness, inches

R = ring radius, inches

It was assumed in Reference 17 that the load vs deflection was a straight line from P_c at zero deflection to $2P_c$ at 2R deflection. This was based on static tests of rings with 18-inch diameter, 1/2-inch thickness and 6-inch height and using A53A, A53B and X52 steels. Thus, the energy absorbed in a static test would be $1.5\ P_c \times 2R = 3\ f_y W t^2$ and the energy absorbed under dynamic loading would be $(1.6)(3) f_y W t^2$. This expression assumes the ring is totally crushed. Although the author proposed this approximation as a reasonable estimate for all ring sizes, he recommended more static tests on ring sizes other than an 18-inch diameter if they were needed for a bridge rail design.

The load vs deflection curves in Figure D6 show the 8-inch rings were stiffer than would be predicted from the approximation. Some of this stiffness may come from the weld which went entirely around the opening in the 1/2-inch plates where the rings were nested. This connection requires the formation of two plastic hinges where the pipe is welded to the 1/2-inch plate on each side of the opening rather than one hinge assumed in the approximation. The smaller 8-inch pipe may also behave a little differently than the 18-inch pipe tested in Reference 17 because of the difference in size.

ClibPDF - www.fastio.com

The permanent deflections of the rings on the test barrier were measured in Tests 411 and 412 and used with Figure D10 to estimate the energy absorbed by the rings in Table D1. This energy was then compared with the kinetic energy of the vehicle computed with the lateral component of impact velocity. Since Figure D10 was based on A53B steel used in the static test specimens, and the test barrier rings were A53A steel, the energy absorbed in the crash test was adjusted by the ratio of the minimum specified yield strengths, 30,000 psi ÷ 35,000 psi = 0.857.

ClibPDF - www.fastio.com

TABLE D1 ENERGY ABSORBED BY RINGS

	Test 411			Test 412		
Post No.	Perm. Deflec. (in.)	Sample 1 "Dynam." Energy Absorbed (in.-k)	Approxi-mation "Dynam." Energy Absorbed (in.-k)	Perm. Deflec. (in.)	Sample 1 "Dynam." Energy Absorbed (in.-k)	Approxi-mation "Dynam." Energy Absorbed (in.-k)
1				0.25	1	1
2				0.13	-	-
3				0.25	1	1
4	0.25	1	1	1.81	11	8
5	1.88	12	8.5	4.69	30	25.5
6	2.63	17	13.0	5.56	38	32.5
7	0.63	3.5	2.5	4.75	30.5	26
8				2.00	12.5	9
9				0.25	1	1
10				0.06	-	-
11				0.25	1	1
Totals	A53B	33.5	25.0		126	105
Est. Totals	A53A	28.7	21.4		108	90

$$K.E._{LAT} = \frac{W(v\sin A)^2}{29.9}$$

where:

$K.E._{LAT}$ = "lateral component" of kinetic energy of vehicle, ft-lbs

W = weight of vehicle, lbs

v = velocity of vehicle, mph

A = angle of impact between barrier and longitudinal centerline of vehicle, degrees

ClibPDF - www.fastio.com

Test 411

$$K.E._{LAT} = \frac{1850\ (59.7 \sin 12°)^2}{29.9} = 9{,}530 \text{ ft-lbs} = 114{,}400 \text{ in-lbs}$$

Test 412

$$K.E._{LAT} = \frac{4530\ (60.7 \sin 23°)^2}{29.9} = 85{,}200 \text{ ft-lbs} = 1{,}023{,}000 \text{ in-lbs}$$

The ratio of energy absorbed to total energy equals:

Test 411

$$\frac{28{,}700(100)}{114{,}400} = 25.1\%$$ Based on Sample No. 1 dynamic energy curve

$$\frac{21{,}400(100)}{114{,}400} = 18.7\%$$ Based on approximation

Test 412

$$\frac{108{,}000(100)}{1{,}023{,}000} = 10.6\%$$ Based on Sample No. 1 dynamic energy curve

$$\frac{90{,}000(100)}{1{,}023{,}000} = 8.8\%$$ Based on approximation

The above calculations do not include the effect of the dynamic deflections of the test barrier rings which were undoubtedly more than the permanent deflections. Neither do they include energy absorbed by bending in the posts.

ClibPDF - www.fastio.com

The approximation suggested in Reference 18 for static energy absorbed, $P_c = (1.14)(3)f_y Wt^2$, which is less conservative than the expression in Reference 17, would be closer to the values obtained with Sample No. 1.

Clearly, an agency wishing to use collapsing rings other than the sizes tested in Reference 17 or this report should conduct a series of static tests on the rings of the desired size and including the connection to rails and posts planned for use.

Although the rings are useful in absorbing the energy of an impacting vehicle, vehicle crushing, friction, etc., appear to absorb a large part of the vehicle kinetic energy.

Figures D11 and D12 show the results of tensile strength tests on specimens from the test barrier including the rings and the upper and lower rails. These results all met specifications. Figure D13 shows static test results of other test barrier samples, all of which met specifications.

ClibPDF - www.fastio.com

State of California
Department of Transportation
TRANSPORTATION LABORATORY

S. M. No.	Date Received
T 101 No.	Cont., W.O., or P.O. No.
Lot No.	F.A.P. No.

REPORT OF TESTS ON Tensiles - Test Barrier Samples

District	County	Route	P.M.	Agency	Sampled By	Date Sampled
					J. Dautel	

Contractor	Manufacturer	Source of Supply
Capitol Iron		Capitol Iron

Report To: Los Angeles, Berkeley, Sacramento, Res. Engr., D.M. Engr.

MATERIAL TESTED FOR: Research #636966 1/2" Samples

Sample No.	Sample Type	Type	Size	Area Before	Area After	Yield Point Actual	Yield Point PSI	Ultimate Actual	Ultimate PSI	Elong. in 2" %	Red. Area %	Cold Bend	Chemical Analysis C	Mn	P	S	Si	A or R
1		8" pipe	.503 .186	.094		4600	48936	5717	60819	34								
2		"	.502 .186	.093		4630	49785	5737	61688	33								
3		"	.052 .186	.093		4700	50538	5799	62355	34								
1		4"x4"x1/2" Tube	.500 .236	.118		7060	59831	7723	65449	31								
2		"	.503 .234	.118		6900	58475	7279	61686	35								
3		"	.503 .231	.116		7180	61897	7246	62466	34								
1		3"x12"x1/4" Tube	.502 .236	.118		6140	52034	9581	81195	31								
2		"	.501 .236	.118		6200	52542	9573	81127	29								
3		"	.502 .236	.118		6370	53983	9578	81169	27								

SPECIFICATIONS

REMARKS
8" Pipe - ASTM A53 Grade A
4"x4" Tube - ASTM A500 Grade B
3"x12" Tube - ASTM A500 Grade B

DATE TESTED: 11-15-82
TESTED BY: Walt
APPROVED BY:

TL-619 (Rev.1-77)

FIGURE D11

ClibPDF - www.fastio.com

State of California
Department of Transportation
TRANSPORTATION LABORATORY

S. M. No.	Date Received
T 101 No.	Cont., W.O., or P.O. No.
Lot No.	F.A.P. No.

REPORT OF TESTS ON Tensiles - Test Barrier Samples

District	County	Route	P.M.	Agency	Sampled By	Date Sampled
					J. Dautel	

Contractor	Manufacturer	Source of Supply
Capitol Iron		Capitol Iron

Report To: Los Angeles ☐ Berkeley ☐ Sacramento ☐ Res. Engr. ☐ D.M. Engr. ☐

MATERIAL TESTED FOR: Research #636966 1-1/2" Samples

Sample No.	Sample Type	Type	Size	Area Before	Area After	Yield Point Actual	Yield Point PSI	Ultimate Actual	Ultimate PSI	Elong. in 2" %	Red. Area %	Cold Bend	Chemical Analysis C	Mn	P	S	Si	A or R
1A		8" pipe	.185 1.505	.278		14500	52158	17400	62590	40								
1B			.184 1.507	.277		14200	51264	17350	62635	38								
1C			.184 1.506	.277		13900	50181	17500	63177	38								
2A		4"x4"x1/4" Tube	.232 1.504	.349		21800	62464	23150	66332	36								
2B			.231 1.505	.348		20450	58764	21900	62931	37								
2C			.232 1.505	.349		21250	60888	22400	64183	36								
3A		3"x12"x1/4" Tube	.235 1.504	.353		20900	59207	28600	81020	34								
3B			.235 1.507	.354		18400	51977	28250	79802	35								
3C			.235 1.504	.353		18800	53258	29150	82578	33								

SPECIFICATIONS

REMARKS

8" Pipe - ASTM A53 Grade A
4"x4" Tube - ASTM A500 Grade B
3"x12" Tube - ASTM A500 Grade B

DATE TESTED: 11/15/82
TESTED BY: Ron
APPROVED BY:

TL-619 (Rev.1-77)

ClibPDF - www.fastio.com

FIGURE D13 STATIC TEST RESULTS

Concrete (7 Sack)-
Cantilevered Deck

Age (Days)	Compressive Strength Cylinder (psi)	Avg. (psi)
4	2970	
	3000	2990
7	3200	
	2930	3070
11	4050	
	3920	3990
14	3680	
	3690	3690
22	4390	
	4090	4240
29	4510	
	4220	4370
54*	4470	
	4510	4490

*December 7, 1982, 4 days after Test 411

3/4" Welded Studs

Attached to Tubes	Tensile Strength (lbs.)
3x12x1/4	15,150*
4x4x1/4	15,650*

*Weld failures

1-1/4" Eyebar with 1-1/2" Eye

Yield Strength = 45,970 psi

Tensile Strength = 81,200 psi

3/4" Wire Rope with Swaged Fitting and Clevis
(3x12 Tube Rail End Anchors)

Sample No.	Ultimate Strength (kips)	Failure Mode
1	55.93	Threads stripped
2	56.15	Cable broke
3	56.65	Cable broke

High Strength Rods - C1018

Diameter (in)	Area (in^2)	Tensile Load (kips)	Tensile Strength (ksi)
1	0.606	51.0	84.16
1	0.606	51.4	84.82
1-1/4	0.969	89.5	92.36
1-1/4	0.969	86.5	89.27

ClibPDF - www.fastio.com

APPENDIX E: Metal Railing (Tubular) Type 18 - Test Barrier Plans and Proposed Standard Plan

Figures E1 and E2 show the complete test barrier plans. Figure E3 shows the standard plan for Metal Railing (Tubular) Type 18. The Office of Structures Design prepared all three drawings.

ClibPDF - www.fastio.com

ClibPDF - www.fastio.com

DIST.	COUNTY	ROUTE	POST MILES—TOTAL PROJECT	SHEET NO.	TOTAL SHEETS

DESIGN ENGINEER — REGISTERED CIVIL ENGINEER NUMBER 12207

DATE APPROVED

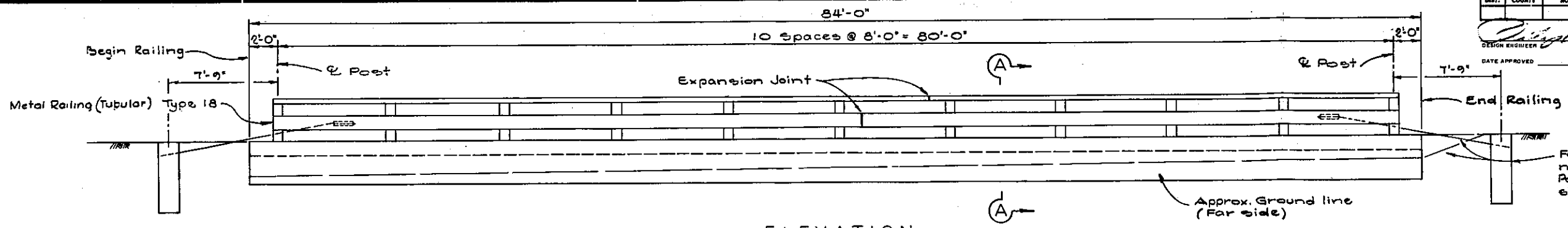

ELEVATION

¼" = 1'-0"

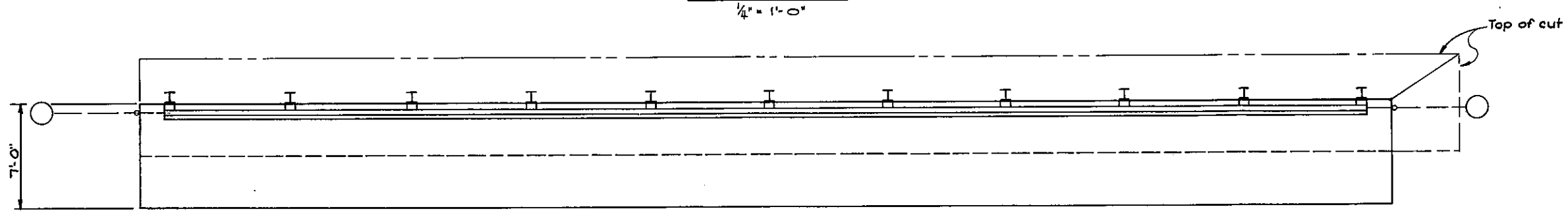

PLAN

¼" = 1'-0"

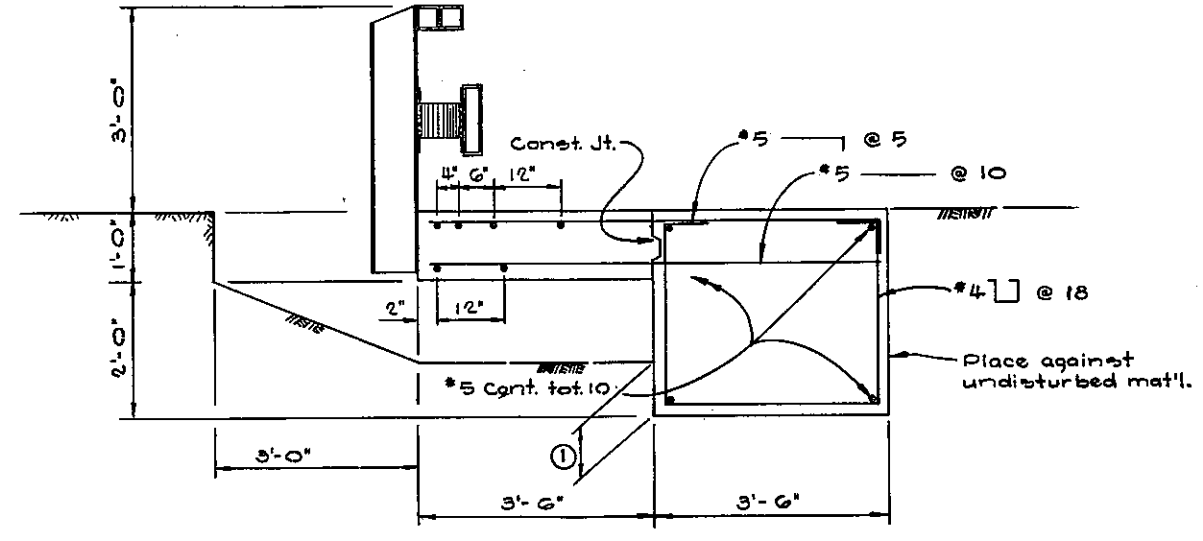

SECTION A-A

¾" = 1'-0"

General Notes

n = 10

f'_c = 3250 psi

f_s = 24000 psi

Note:

See Metal Railing (Tubular) Type 18 sht. for details not shown.

1 ~ Varies; 6" @ Begin Railing, 1'-0" @ End Railing.

DESIGN	By R.W. BISHOP	Checked SA	
DETAILS	By E. Yomogida 7/82	Checked	
QUANTITIES	By	Checked	

State of CALIFORNIA DEPARTMENT OF TRANSPORTATION

STRUCTURES - DESIGN 6

PROJECT ENGINEER — REGISTERED CIVIL ENGINEER NO. C-9584

BRIDGE NO.

POST MILE

METAL RAILING (TUBULAR) TYPE 18
CONCRETE SLAB DETAILS

ORIGINAL SCALE IN INCHES FOR REDUCED PLANS 0 1 2 3

CU

WO

Disregard prints bearing earlier revision dates

REVISION DATES (PRELIMINARY STAGE ONLY) 8/82 2/83

SHEET 1 OF 3

ClibPDF - www.fastio.com

ClibPDF - www.fastio.com

FIGURE E3 STANDARD PLAN

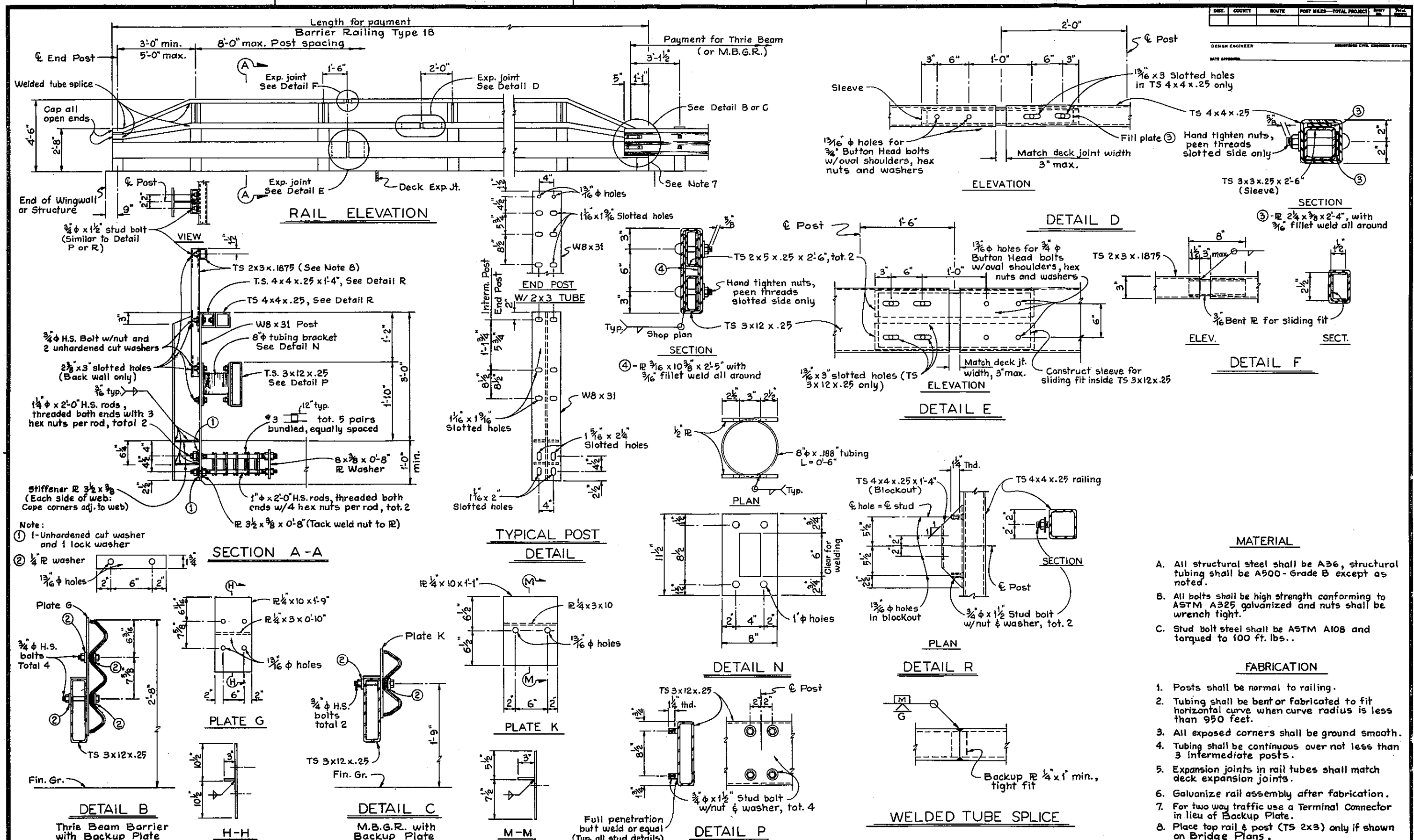

MATERIAL

A. All structural steel shall be A36, structural tubing shall be A500 - Grade B except as noted.

B. All bolts shall be high strength conforming to ASTM A325 galvanized and nuts shall be wrench tight.

C. Stud bolt steel shall be ASTM A108 and torqued to 100 ft. lbs..

FABRICATION

1. Posts shall be normal to railing.
2. Tubing shall be bent or fabricated to fit horizontal curve when curve radius is less than 950 feet.
3. All exposed corners shall be ground smooth.
4. Tubing shall be continuous over not less than 3 intermediate posts.
5. Expansion joints in rail tubes shall match deck expansion joints.
6. Galvanize rail assembly after fabrication.
7. For two way traffic use a Terminal Connector in lieu of Backup Plate.
8. Place top rail & post (TS 2x3) only if shown on Bridge Plans.

STANDARD DRAWING

FILE No.	DESIGN	By R.W. BISHOP 3/83	Checked E.N. BRUNBERG
DRAWING	DETAILS	By P. Gregory	Checked E.N. BRUNBERG
DATE	SUBMITTED BY		

Approval Recommended By

State of CALIFORNIA DEPARTMENT OF TRANSPORTATION

STRUCTURES-DESIGN

PROJECT ENGINEER REGISTERED CIVIL ENGINEER NO.

BRIDGE NO. POST MILE

METAL RAILING (TUBULAR) TYPE 18

ORIGINAL SCALE IN INCHES FOR REDUCED PLANS 0 1 2 3

Disregard prints bearing earlier revision date

REVISION DATES (PRELIMINARY STAGE ONLY) SHEET OF

ClibPDF - www.fastio.com

ClibPDF - www.fastio.com

ClibPDF - www.fastio.com

FIGURE E3 STANDARD PLAN

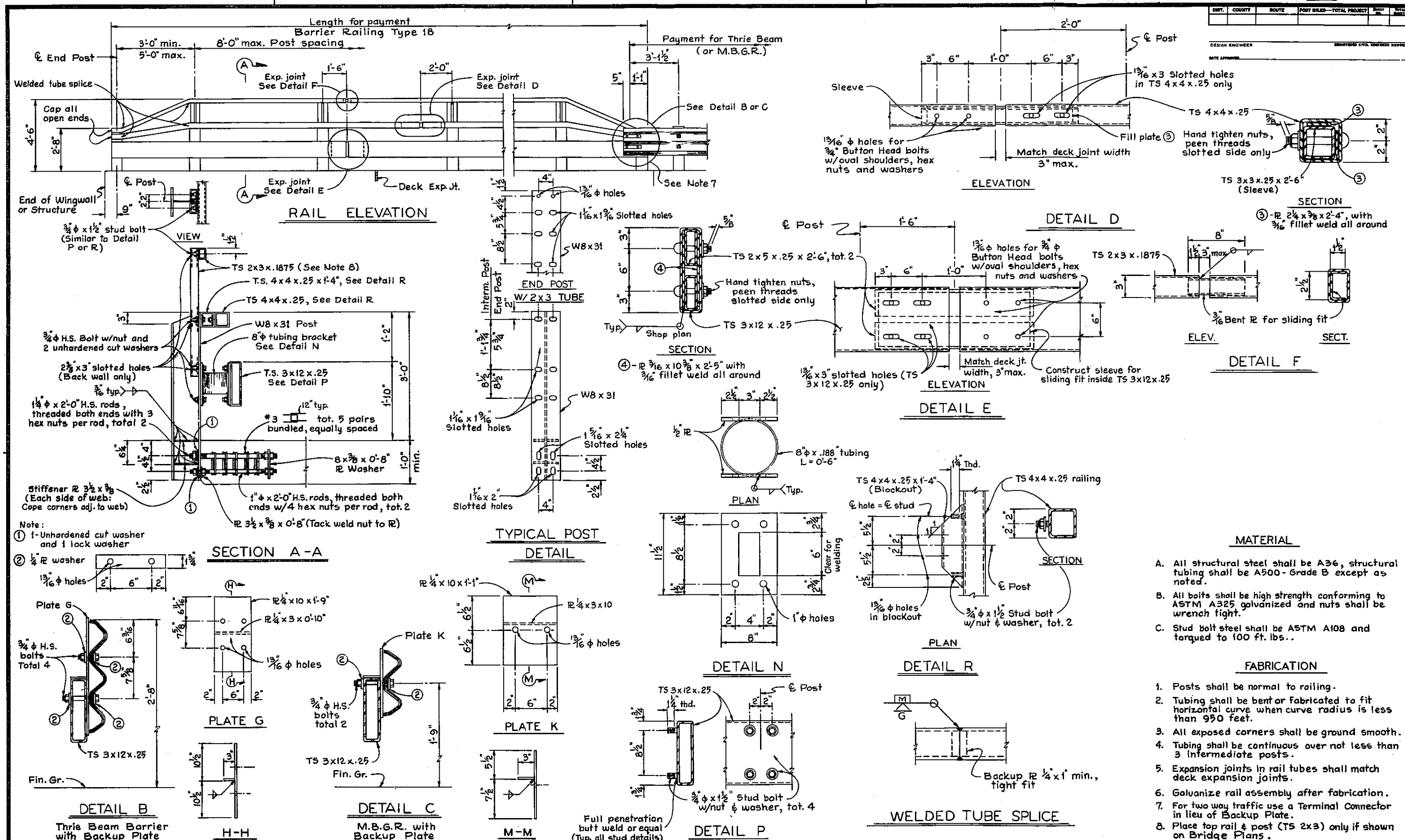

MATERIAL

A. All structural steel shall be A36, structural tubing shall be A500 - Grade B except as noted.

B. All bolts shall be high strength conforming to ASTM A325 galvanized and nuts shall be wrench tight.

C. Stud bolt steel shall be ASTM A108 and torqued to 100 ft. lbs..

FABRICATION

1. Posts shall be normal to railing.
2. Tubing shall be bent or fabricated to fit horizontal curve when curve radius is less than 950 feet.
3. All exposed corners shall be ground smooth.
4. Tubing shall be continuous over not less than 3 intermediate posts.
5. Expansion joints in rail tubes shall match deck expansion joints.
6. Galvanize rail assembly after fabrication.
7. For two way traffic use a Terminal Connector in lieu of Backup Plate.
8. Place top rail & post (TS 2x3) only if shown on Bridge Plans.

STANDARD DRAWING

FILE NO.	DESIGN	By R.W. BISHOP 3/83	Checked E.H. BRUNBERG
DRAWING	DETAILS	By P. Gregory	Checked E.H. BRUNBERG
DATE	SUBMITTED BY		

Approval Recommended By

State of CALIFORNIA DEPARTMENT OF TRANSPORTATION

STRUCTURES-DESIGN

PROJECT ENGINEER REGISTERED CIVIL ENGINEER NO.

BRIDGE NO. POST MILE

METAL RAILING (TUBULAR) TYPE 18

ORIGINAL SCALE IN INCHES FOR REDUCED PLANS 0 1 2 3

CU WO

Disregard prints bearing earlier revision dates

REVISION DATES (PRELIMINARY STAGE ONLY) SHEET OF

ClibPDF - www.fastio.com

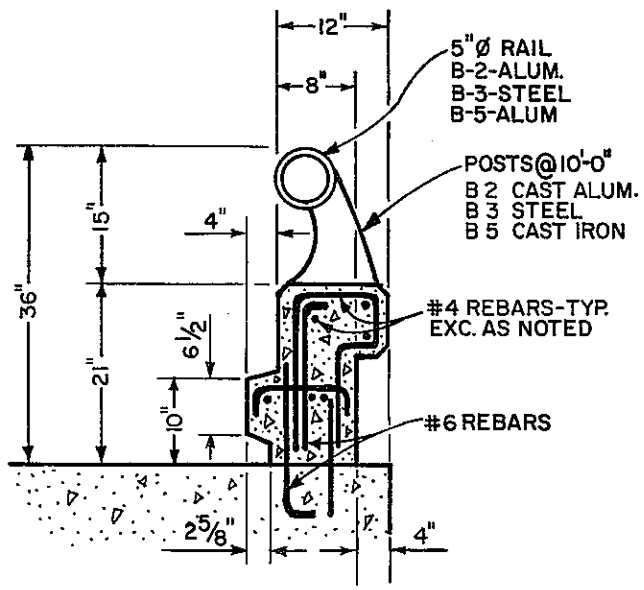

TYPE 1
SEPT., 1962–FEB., 1963
THREE TESTS

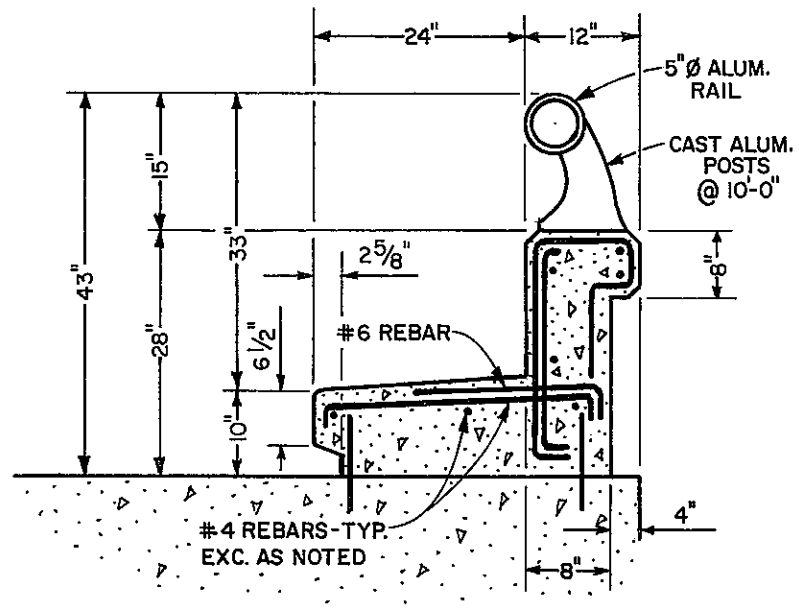

TYPE 2
SEPT., 1962

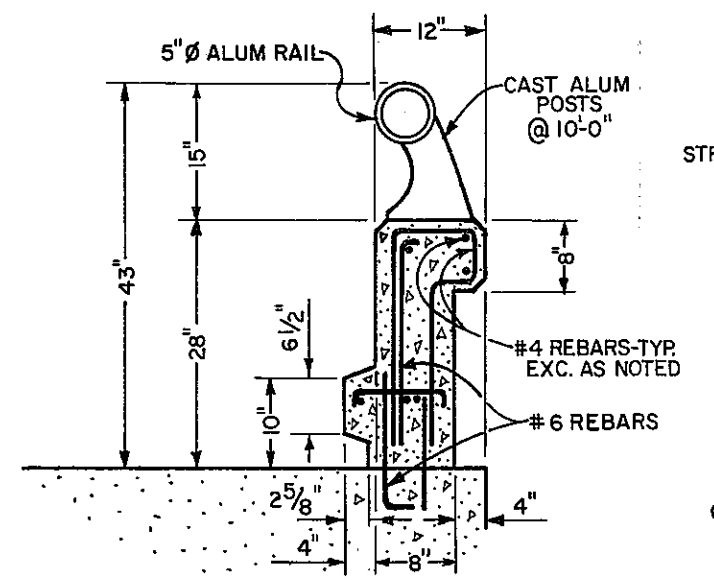

MODIFIED TYPE 1
JAN., 1963

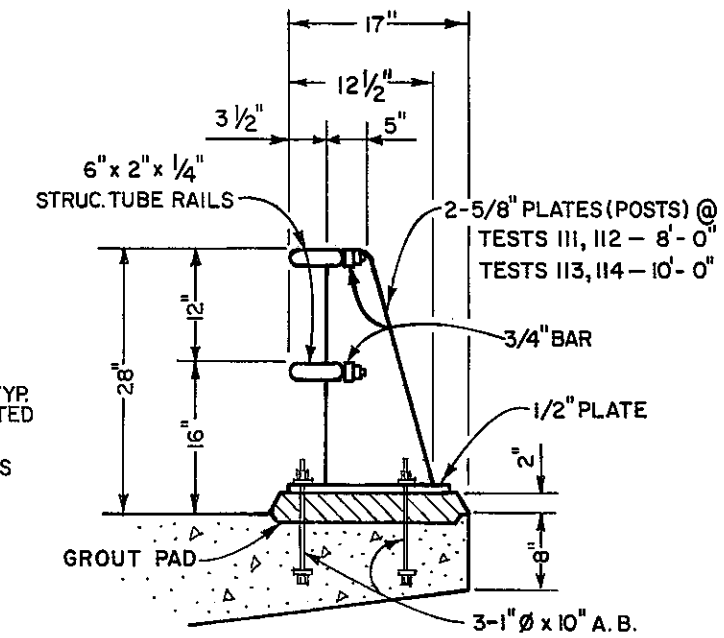

TYPE 8
APRIL, 1965–APRIL, 1966
FOUR TESTS

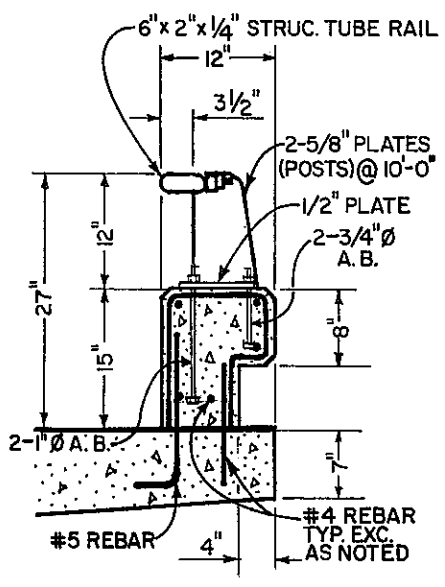

TYPE 9
DEC., 1967

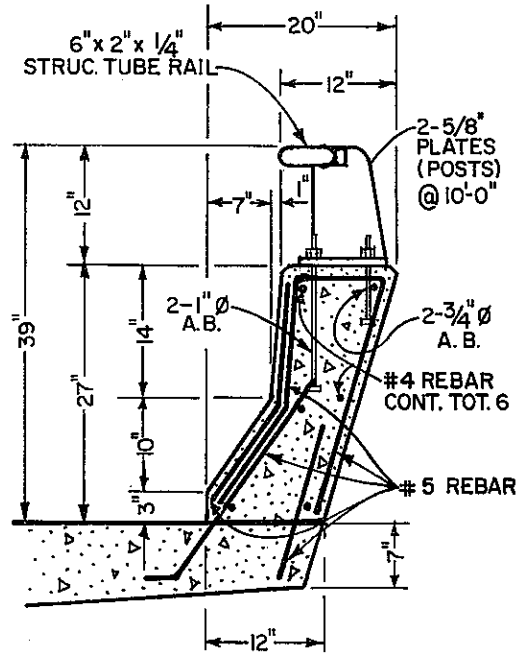

TYPE 20
OCT., 1969
FIVE TESTS

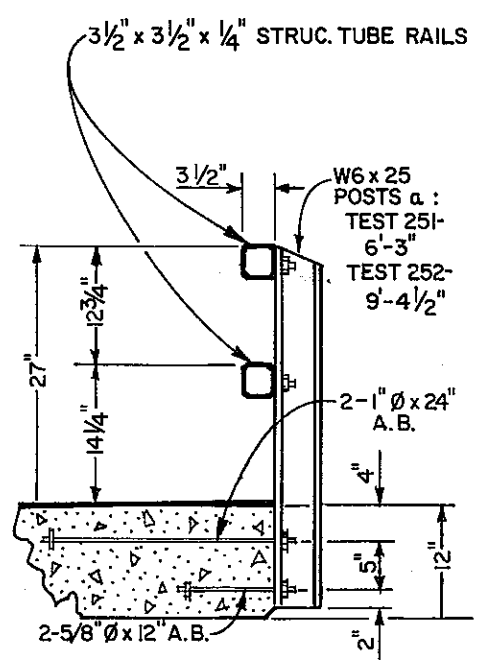

TYPE 15
JULY–OCT., 1970
TWO TESTS

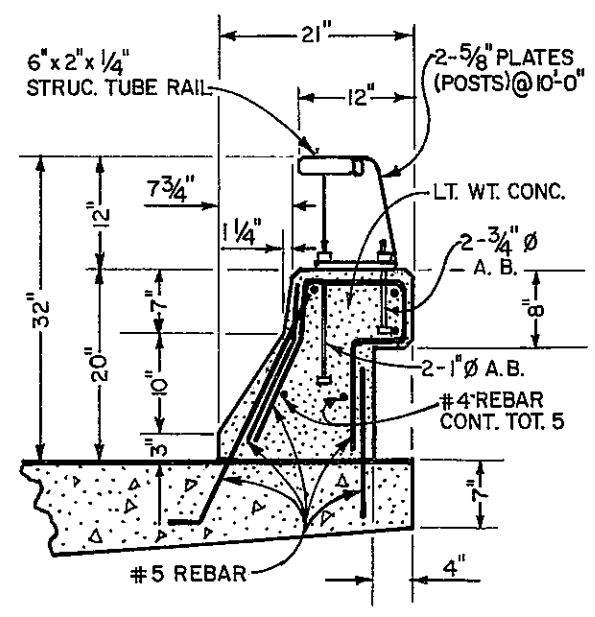

MODIFIED TYPE 20
JULY–AUG., 1971
SEVEN TESTS

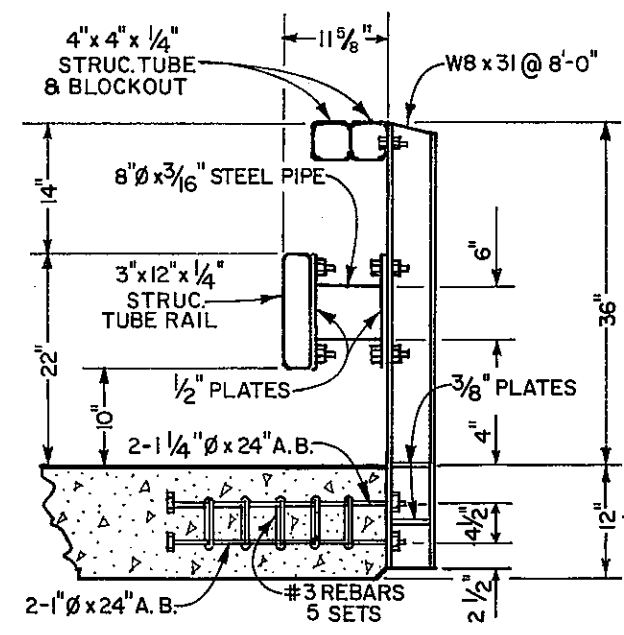

TYPE 18
DEC., 1982 – JAN., 1983
TWO TESTS

BRIDGE BARRIER RAILINGS CRASH TESTED BY CALTRANS

FIGURE 2B

ClibPDF - www.fastio.com

ClibPDF - www.fastio.com

ClibPDF - www.fastio.com

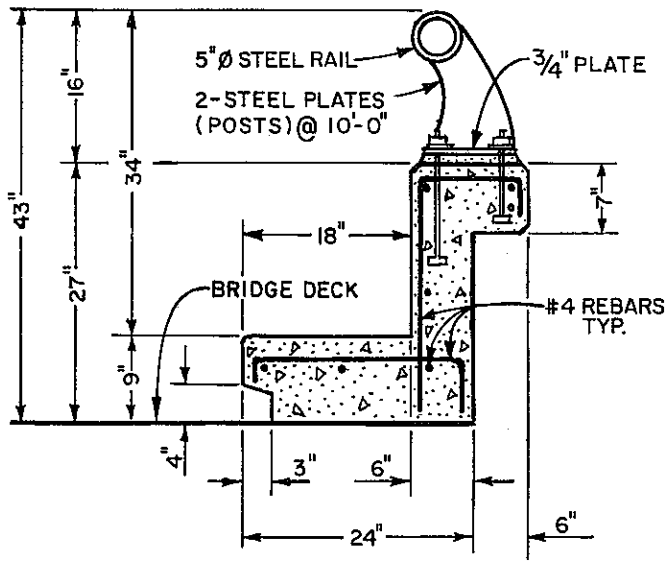

BRIDGE RAIL TRIAL DESIGN 1
1955

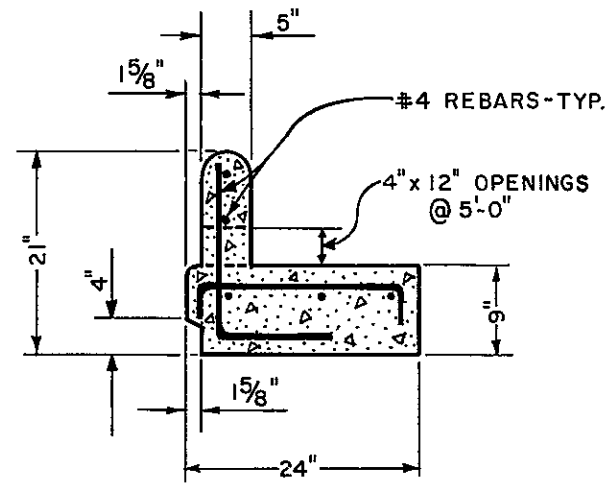

BRIDGE RAIL TRIAL DESIGN 2
1955

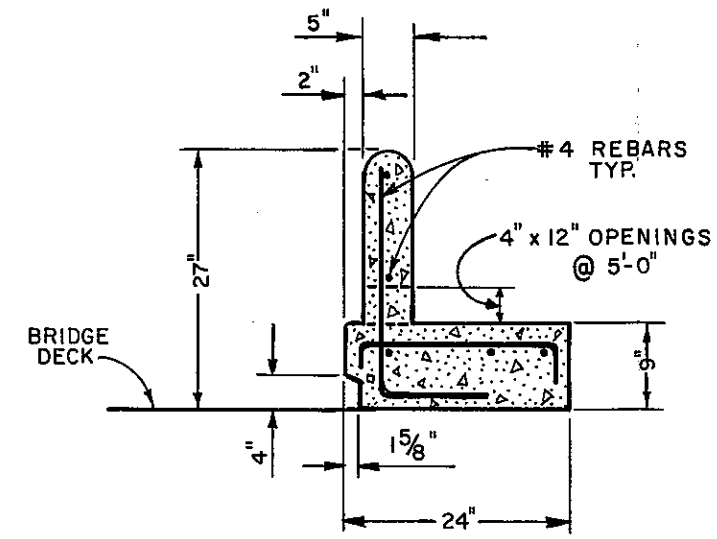

BRIDGE RAIL TRIAL DESIGN 3
1955
TWO TESTS

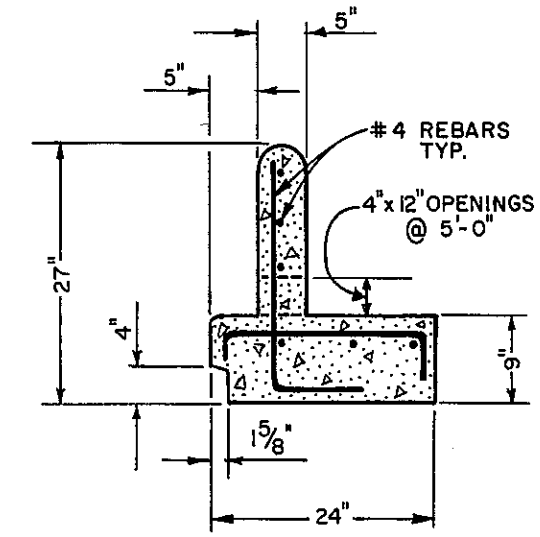

BRIDGE RAIL TRIAL DESIGN 5
1955

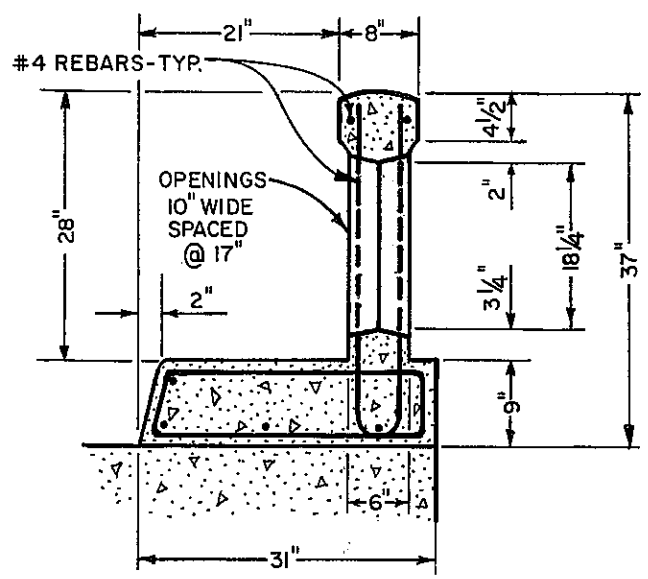

CONCRETE BALUSTER DESIGN I
JAN.,1959

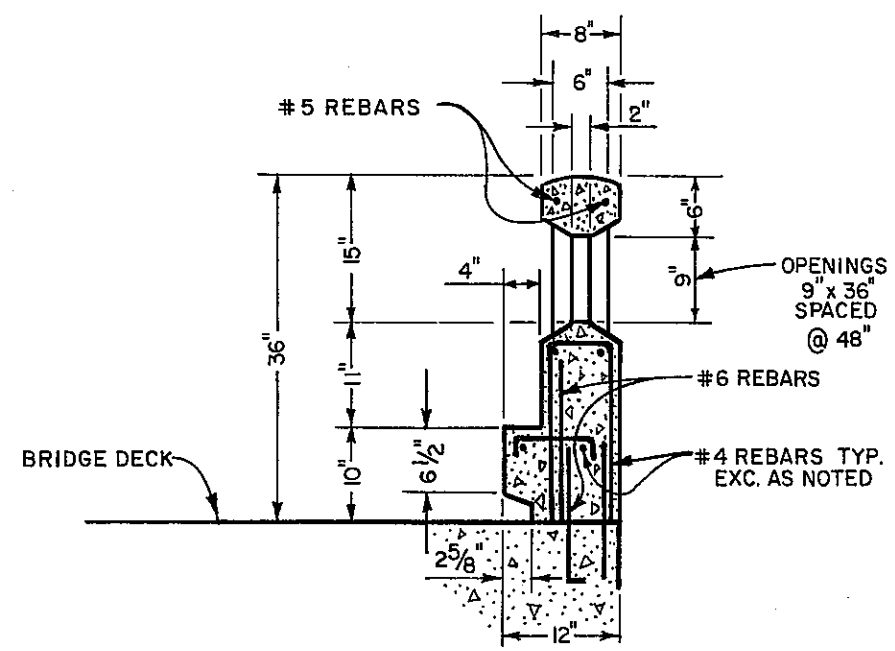

CONCRETE BALUSTER DESIGN II
JAN. - JULY, 1959
THREE TESTS

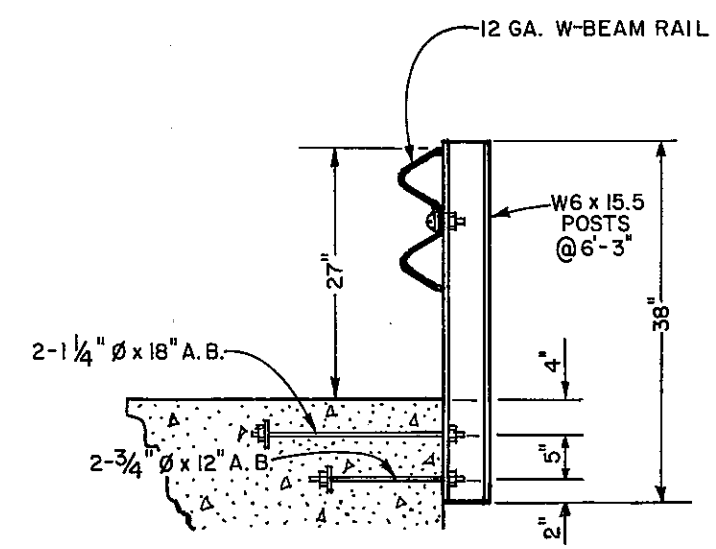

METAL BEAM
FEB., 1959

BRIDGE BARRIER RAILINGS CRASH TESTED BY CALTRANS

FIGURE 2A

ClibPDF - www.fastio.com