Technical Report Documentation Page

1. Report	2. Governement Accession No.	3. Recipients Catalog No.
FHWA/CA/TL-96/09		

4. Title and Subtitle	5. Report Date
Development of a Time Domain Reflectometry System to Monitor Landslide Activity	June 1996
	6. Performing Organization Code
7. Author(s) William F. Kane, Hernan Perez, Neil O. Anderson	8. Performing Organization Report No.
9. Performing Organization Name and Address University of the Pacific 3601 Pacific Avenue Stockton, CA 95211	10. Work Unit No. (TRAIS)
12. Sponsoring Agency Name and Address California Department of Transportation Office of Structural Foundations 5900 Folsom Boulevard P.O. Box 19128 Sacramento, CA 95819-0128	11. Contract or Grant No. 65W019
	13. Type of Report and Period Covered Final: Jul 1994-Jun 1996
	14. Sponsoring Agency Code

15. Supplementary Notes

16. Abstract

The results of a research project to investigate the use of time domain reflectometry (TDR) to monitor landslide movement are reported here. The use of coaxial cables and TDR to monitor earth movements is relatively new. This method uses the changes in the signature of a voltage pulse traveling along a coaxial cable grouted into a borehole. In this research, three coaxial cables (RG59/U) were grouted into boreholes in the Grapevine landslide, Kern County, California adjacent to Interstate Highway 5.

The TDR literature pertaining to geotechnical applications was reviewed. A computer, cable testers, software, and equipment for remote data acquisition of TDR data were procured and assembled. In addition, laboratory testing of RG59/U cable was performed to determine strength and deformation characteristics.

The final product provides Caltrans with an alternative, economical means of monitoring landslide movement. The advantages of using TDR are its relative ease of installation, rapid data collection, low long-term costs, and remote data acquisition capability.

17. Key Words	18. Distribution Statement
Time domain reflectometry, landslides, monitoring	No restrictions. This document is available to the public through the National Technical Information Service, Springfield, VA 22161

19. Security Classif. (of this report)	20. Security Classif. (of this page)	21. No. of Pages	22. Price
Unclassified	Unclassified	72	

Form DOT F 1700.7 (8-72) Reproduction of competed page authorized

DEVELOPMENT OF A

TIME DOMAIN REFLECTOMETRY SYSTEM

TO MONITOR LANDSLIDE ACTIVITY

FHWA/CA/TL-96/09

Contract Number: 65W019

FINAL REPORT

By

William F. Kane, Principal Investigator
Hernan Perez
Neil O. Anderson
Department of Civil Engineering
University of the Pacific
Stockton, CA 95211

Prepared for

Timothy J. Beck, Project Manager
California Department of Transportation
Office of Structural Foundations
5900 Folsom Boulevard
P.O. Box 19128
Sacramento, CA 95819 -0128

Disclaimer: The contents of this report reflect the views of the authors who are responsible for the facts and the accuracy of the data presented herein. The contents do not necessarily reflect the official views or policies of the STATE OF CALIFORNIA or the FEDERAL HIGHWAY ADMINISTRATION. This report does not constitute a standard, specification, or regulation.

June 1996

EXECUTIVE SUMMARY

This report describes the results of a research project to investigate the use of time domain reflectometry (TDR) to monitor landslide movement. The use of coaxial cables and TDR to monitor earth movements is relatively new. The method uses the changes in the signature of a voltage pulse traveling along a coaxial cable grouted into a borehole. In this research, three coaxial cables (RG59/U) were grouted into boreholes in the Grapevine landslide, Kern County, California adjacent to Interstate Highway 5.

The following tasks were accomplished:

1. TDR literature review and compilation of an extensive bibliography on the application of TDR in geotechnical engineering
2. Procurement of computer, cable testers, and other equipment for remote data acquisition of TDR data
3. Installation and verification of software programs and methodology to read TDR cables installed in landslides
4. Installation of remote data acquisition equipment at the Grapevine Landslide including electronic hook-up and mobile phone connection
5. Collection of TDR data by use of notebook computer
6. Laboratory testing of RG59/U cable to determine tensile behavior and corresponding TDR signatures
7. Writing data acquisition program and installing in datalogger
8. Analysis of TDR data from Grapevine Landslide

TDR provides Caltrans with an alternative method to inclinometers in monitoring unstable slopes. It is an economical means of monitoring landslide movement that is safe and easy to use.

ACKNOWLEDGMENTS

The authors would like to thank several of the early investigators who used time domain reflectometry for geomechanics. Dr. Kevin O'Connor of GeoTDR, Minneapolis, Minnesota, and formerly of the U.S. Bureau of Mines Twin Cities Research Center, was a strong supporter of this project. Dr. O'Connor and the Bureau loaned the equipment and supplied much early technical support and training.

Dr. Cathy Aimone of New Mexico Technical Institute was invaluable in sharing information on cable properties and behavior. In addition, Dr. Aimone arranged a tour of the Waste Isolation Pilot Plant in Carlsbad, New Mexico, which allowed a first-hand glimpse of some important time domain reflectometry work.

Dr. Timothy Aston of the Canada Centre for Mineral and Energy Technology was extremely helpful in sharing information and techniques on his own slope stabilty and ground movement projects.

Special thanks are due to University of the Pacific students Elizabeth Freeman, Misti Gwinnup-Green, Larry Huang, and Jeremy White for careful proofreading and excellent suggestions.

Without these individuals, the successes and findings of this project would be greatly diminished. Any errors or omissions are strictly the responsibility of the authors.

TABLE OF CONTENTS

EXECUTIVE SUMMARY iii

ACKNOWLEDGMENTS v

TABLE OF CONTENTS vii

LIST OF FIGURES xi

LIST OF TABLES xiii

LIST OF SYMBOLS AND ABBREVIATIONS xv

SI CONVERSIONS xii

1. INTRODUCTION 1-1

1.1 Project Background 1-1

1.2 Theory of Time Domain Reflectometry 1-1

1.2.1 Principle of TDR 1-2

1.2.2 Cable Response to Deformation 1-3

1.3 TDR in Geotechnical Engineering 1-5

1.3.1 Coal Mining 1-5

1.3.2 Waste Isolation Pilot Plant 1-6

1.3.3 Abandoned Hard Rock Mines 1-6

1.3.4 Slope Movements 1-7

1.3.4.1 Mining Highwalls 1-7

1.3.4.2 Rock and Soil Slopes 1-8

1.3.5 Other Geotechnical Applications 1-10

1.3.6 Structural Engineering Applications 1-11

1.4 References 1-11

2. LABORATORY TESTING 2-1

2.1 Introduction 2-1

2.2 Test Methods 2-3

2.2.1 Strength Testing 2-3

2.2.2 TDR/Strain Testing 2-4

2.3 Results and Discussion 2-5
2.4 Conclusions 2-9
2.5 References 2-10
3. INSTALLATION AND RESULTS 3-1
3.1 Site Description and Geology 3-1
3.2 General Configuration 3-3
3.3 Cables 3-4
3.4 Installation 3-5
3.5 Electronics 3-6
3.5.1 Overview 3-6
3.5.2 Cable Tester and Peripherals 3-8
3.5.2.1 Tektronix 1502B Cable Tester 3-8
3.5.2.2 SP232 Extended Serial Function Module 3-10
3.5.3 Datalogger and Multiplexer 3-10
3.5.4 Cellular Phone 3-10
3.5.5 Power Source 3-11
3.6 Software 3-11
3.6.1 Tektronix SP Program 3-11
3.6.2 Campbell Scientific Programs 3-11
3.6.3 NUTSA 3-12
3.7 Data Acquisition 3-13
3.7.1 Data Acquisition by Cable Tester and Laptop Computer 3-13
3.7.2 Data Acquisition Program 3-14
3.7.3 Communication Programs 3-17
3.8 Signature Analysis of Grapevine TDR Cables 3-19
3.9 References 3-23

4. DISCUSSION, CONCLUSIONS, AND RECOMMENDATIONS 4-1
4.1 Discussion and Conclusions 4-1
4.1.1 Literature Review 4-1
4.1.2 Equipment Purchase 4-1
4.1.3 Computer Software 4-2
4.1.4 Grapevine Landslide Monitoring 4-2
4.1.5 Remote Monitoring Capabilities 4-2
4.1.6 Laboratory Testing 4-2
4.2 Recommendations 4-3
4.3 Reference 4-3

APPENDICES

A. Glossary of Selected Terms
B. Bibliography of Time Domain Reflectometry Applicable to Geotechnical Engineering
C. Vendors of Equipment for TDR Measurements (as of August 15, 1995)
D. Wiring Diagrams for Data Acquisition Equipment

LIST OF FIGURES

FIG. 1-1. TDR Cable Installations in California as of 6/30/96. 1-2
FIG. 1-2. Cross-section of Coaxial Cable 1-3
FIG. 1-3. TDR Installed in Grouted Hole. 1-4
FIG. 1-4. TDR Cable Signatures from Grapevine Landslide 1-4
FIG. 1-5. Inclinometer Profile for Levee (Kane et al., 1996). 1-9
FIG. 1-6. Coaxial Cable in Levee Showing Development of Signature Spike (Kane et al. 1996). 1-9
FIG. 2-1. Idealized Behavior of RG59/U Cable Across Shear Plane 2-1
FIG. 2-2. Comparison of TDR Signatures for Shear (a) and Extension (b) at Failure (Dowding et al., 1988) 2-2
FIG. 2-3. Tensile Machine Including Cable and Extensometer Installation 2-4
FIG. 2-4. Typical Load-Displacement Curve Including Points where TDR Signatures were Recorded 2-5
FIG. 2-5. Typical TDR Signatures of a Tensile Test 2-6
FIG. 3-1. Aerial View of Interstate 5 Looking South into Grapevine Canyon 3-1
FIG. 3-2. Aerial Oblique View of Grapevine Landslide 3-2
FIG. 3-3. Schematic of Grapevine TDR Installation 3-4
FIG. 3-4. Approximate Locations of TDR Cables on Grapevine Landslide (Not To Scale) 3-4
FIG. 3-5. Photograph of Remote Data Acquisition Equipment Installed at Grapevine Site . 3-7
FIG. 3-6. Identification of Remote Data Acquisition Components 3-8
FIG. 3-7. One Method to Modify NUTSA Signatures for Use in a Report Document 3-13
FIG. 3-8. Steps to Acquire Cable Signature Using Cable Tester and Laptop Computer . . . 3-14
FIG. 3-9. Steps to Download Program to Datalogger 3-18
FIG. 3-10. Steps to Access Datalogger Directly 3-19
FIG. 3-11. TDR Signatures for Cable #1 3-20
FIG. 3-12. TDR Signatures for Cable #2 3-21
FIG. 3-13. TDR Signatures for Cable #3 3-22

FIG. D-1 SDM 1502 and CR10 Wiring Diagram D-1
FIG. D-2 Cable Tester Power from CR10 . . . . . D-1
FIG. D-3 Multiplexer/Datalogger Wiring D-2
FIG. D-4 Datalogger/Relay Wiring D-2
FIG. D-5 Cellular Phone System Wiring D-3
FIG. D-6 Power Supply Wiring D-3
FIG. D-7 TDR Coaxial Cable Wiring D-4

LIST OF TABLES

TABLE 2-1 Properties of RG59/U Coaxial Cable Used in Laboratory Testing 2-2

TABLE 2-2 Tensile Test Results for Jacketed RG59/U Cable 2-7

TABLE 2-3 Tensile Test Results for Unjacketed Cable 2-8

TABLE 3-1 Types of Cables Used for Landslide Monitoring 3-5

TABLE 3-2 TDR System Equipment 3-9

TABLE 3-3 Pin Configurations for Computer-Cable Tester Cables 3-10

TABLE 3-4 Programs Used in TDR Data Acquisition andReduction 3-12

LIST OF SYMBOLS AND ABBREVIATIONS

Caltrans	California Department of Transportation
CANMET	Canada Centre for Mineral and Energy Technology
ft	feet
in	inches
km	kilometers
lbs	pounds force
m	meters
mi	miles
mm	millimeters
mρ	millirhos
N (kN)	Newtons (kilonewtons)
Pa (kPA)	Pascals (kilopascals)
TDR	time domain reflectometry
USBM	United States Bureau of Mines
Vp	velocity of propagation
WIPP	Waste Isolation Pilot Project

SI CONVERSIONS

Every reasonable effort was made to provide measurements in both American (so-called English system) and Système Internátionale (SI) units. However, some laboratory test instruments such as dial gauges and load cells used in this research were in American units. In addition TDR output was also in American units. Conversion of this data would be cumbersome and inaccurate. In the case of TDR signatures, conversion is impossible -- the signatures must be collected in SI units. The authors apologize for any inconvenience on the part of the reader. Conversions from American to SI units can be made from the following table.

Length	Area	Volume	Mass/Weight	Pressure
1 in = 25.4 mm	1 in^2 = 645 mm^2	1 ft^3 = 0.03 m^3	1 lbm =0.5 kg	1 psi = 6.9 kPa
1 ft = 0.3 m	1 ft^2 = 0.09 m^2	1 yd^3 = 20.6 m^3	1 short ton = 907 kg	1 psf = 48 Pa
1 yd = 0.9 m	1 mi^2 = 2.6 km^2		1 lbf = 4.5 N	
1 mi = 2.6 km	1 acre = 0.4 ha		1 lb/ft^3 = 0.15 kN/m^3	

1. INTRODUCTION

1.1 Project Background

This project was conceived based on the first author's experience as a consultant with the U.S. Bureau of Mines Twin Cities Research Center, Minneapolis, Minnesota. The Bureau pioneered the use of time domain reflectometry (TDR) for monitoring rock deformation during strata caving over longwall mines (O'Connor and Wade, 1994; U.S. Bureau of Mines, 1995). Although the expansion of the technology to landslide movement was relatively uncomplicated, the use of TDR for rock slope monitoring is new. At this time, the only other organizations doing research in the field are Neil O. Anderson & Associates, Lodi, California; New Mexico Technological University, Socorro; Northwestern University, Evanston, Illinois; and the Canadian Centre for Mineral and Energy Technology (CANMET), Ottawa, Canada. Their work is described in the appropriate sections.

In December 1993, a prototype experiment began. A single cable strapped to an inclinometer casing was installed in the Last Chance Grade Landslide on U.S. Highway 101 in Del Norte County, California. Inclinometer and TDR data were collected on installation, and later in May 1994. The May data indicated cable deformation in the same region shown by the inclinometer. This work is described in Kane and Beck (1994).

Grapevine Landslide was subsequently selected as a test site for the research described in this report. At the time of its selection the Grapevine slide was moving and appeared to be an ideal location for further testing of the TDR concept and the use of remote data acquisition equipment. Since the initial installation at Last Chance Grade, cables have been installed at a number of sites in California. These locations are shown in Figure 1-1 and much of the work is described in Kane et al. (1996).

1.2 Theory of Time Domain Reflectometry

Radar is an early form of TDR. In radar, a radio transmitter sends out a short pulse of energy and measures the time for a reflection, or echo, of the energy from some object. TDR works in much the same way. Coaxial TDR is essentially "closed circuit radar" (Andrews, 1994). An electrical pulse is sent along a coaxial cable and an oscilloscope is used to determine the time it takes for the echos to return. According to Andrews (1994), this

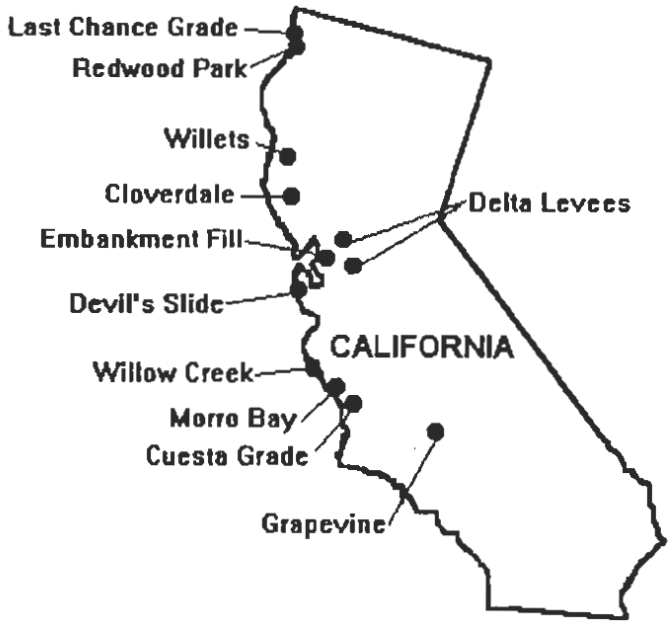

FIG. 1-1. TDR Cable Installations in California as of 6/30/96.

technique was mentioned as early as 1931 by Rohrig (1931) to find faults in telephone cables.

1.2.1 Principle of TDR[1]

In TDR, a pulse waveform, which is a fast-rising step function, is sent down the a coaxial cable. If the pulse encounters a change in the characteristic impedance of the cable, it is reflected. Changes in the characteristic cable impedance are called "cable faults." These can take the form of kinks, foreign substances such as water, or breaks in the cable. Cable heating can also be detected (Steiner and Weeks, 1990). The returned pulse is compared with the emitted pulse, and the reflection coefficient (in rho's or millirho's) is determined. If the reflected voltage equals the transmitted voltage, the reflection coefficient is +1 and the cable is broken. If the opposite occurs, and the cable

[1] See Appendix A Glossary of Selected Terms for descriptions of technical terms.

is shorted, all the energy will be returned by way of the ground, and the reflection coefficient will be -1. If the cable has a change of impedance, the reflection coefficient will be between -1 and +1. If the pulse experiences a decrease in impedance, the reflection coefficient will be negative. If the pulse experiences a higher impedance the reflection coefficient will be positive.

In a vacuum, electrical energy travels at the speed of light. The speed at which it travels in a cable is somewhat less depending on the impedance of the cable. This speed is known as the velocity of propagation (Vp) and is a property of each cable. When the cable propagation velocity and time delay between transmitted and measured pulses are known, the distance to any cable fault can be found. The type and severity of the fault can also be determined (Su, 1987).

1.2.2 Cable Response to Deformation

Coaxial cables, Figure 1-2, are composed of a central metallic conductor surrounded by an insulating material, a metallic outer conductor surrounding the insulation, and a protective jacket. The cables have a characteristic impedance determined by the thickness and type of insulating material between the cables. This insulating material is called the "dielectric," and may be made of almost any non-conducting material. Common dielectric materials are PVC-foam, Teflon, and air. If the cable is faulted, the distance between the inner and outer conductors changes, as does the impedance at that point. The TDR cable tester can then determine the location of the fault.

The data consist of series of TDR signatures or strip charts, Figures 1-3 and 1-4. Different wave reflections are received for different cable deformations. The length and amplitude of the reflection indicates the severity of the damage. For a cable in shear, a voltage reflection spike of short wavelength is

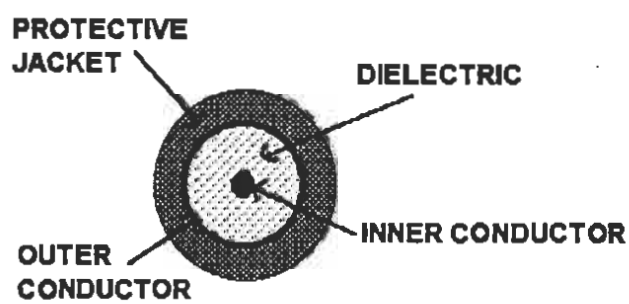

FIG. 1-2. Cross-section of Coaxial Cable

recorded. The wavelength increases in direct proportion to the shear deformation. A distinct negative spike occurs just before failure. After failure, a permanent positive reflection is recorded. For cables in tension, the wave reflection is a subtle, trough-like voltage signal that increases in length as the cable is further deformed. At tensile failure a small necking trough appears, making it is easy to distinguish from a shear failure (Dowding et al., 1988; 1989). These results were verified by Aimone-Martin et al. (1994) who also quantified combined shear and tension in copper/air and copper/foam corrugated cables.

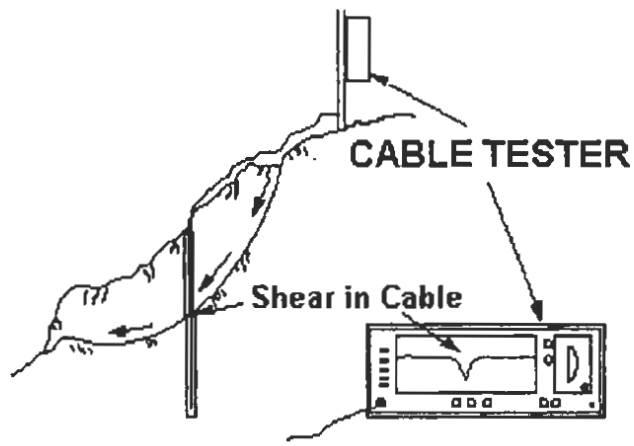

FIG. 1-3. TDR Installed in Grouted Hole.

Attenuation of the pulse with distance along the cable can be a problem when using TDR to determine shear displacement. Pierce et al. (1994) found that deformation could be quantified to a distance up to 268 m (880 ft) and detected to a distance of 530 m (1740 ft). Each deformation in the cable reduces the strength of following (downstream) reflections.

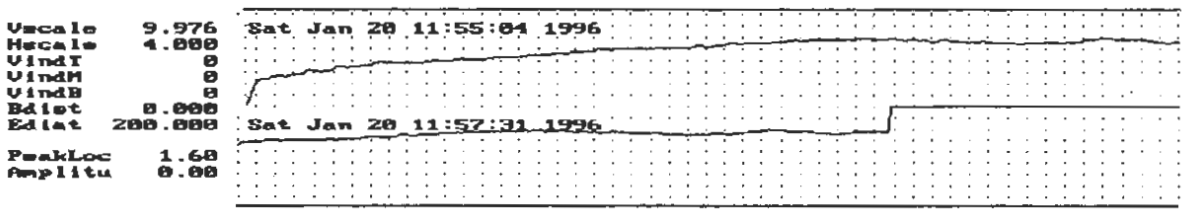

FIG. 1-4. TDR Cable Signatures from Grapevine Landslide. Signature is in two parts for 82 m (270 ft) cable. Top of cable is at upper left, bottom is at lower right.

1.3 TDR in Geotechnical Engineering

Rock mass movements deform the grouted cable, changing the cable impedance and, as a result, the reflected waveform of the voltage pulse, Figures 1-3 and 1-4. The time delay between a transmitted pulse and the reflection from a cable deformity determine the damage location. Also, as described in Section 2 of this report, the time, sign, length, and amplitude of the reflection pulse defines the location, type, and severity of the cable deformation.

TDR is used successfully in monitoring soil moisture conditions (Topp and Davis, 1985). This application so far has found use only in agricultural and environmental projects, but is also suitable to geotechnical engineering.

TDR has been used in several other geotechnical applications. Most significantly, it is utilized in coal mining ground control. One of the earliest applications was in determining rock fracture after detonation of a nuclear device (Sisemore and Stefani, 1971). Other applications include monitoring ground movements in the Waste Isolation Pilot Project (Aimone-Martin and Oravecz, 1994), above abandoned mine stopes (Aston, 1995), and slope stability monitoring in open-pit mines (Lord et al., 1991).

1.3.1 Coal Mining

In the Appalachian coal fields, Hasenfus et al. (1988) used two RG-59 cables and a twisted pair cable in each of four 220 m (720 ft) deep boreholes to monitor strata movement during subsidence above a coal mine. All four holes had cable failures at a depth of about 152 m (500 ft). The cables failed between rock interfaces and within the weak claystone and coal strata. It was believed that the cable failures were due to shear slippage along roughly horizontal planes within the rock layers. The slippage was due to bending of the rock strata during caving of the overburden. This hypothesis was verified by finite element analysis.

Haramy and Fejes (1992) used TDR in a similar study in a western Colorado longwall mine. The goal of the research was to compare several types of instrumentation for characterizing overburden response during mining. A 335 m (1,100 ft) coaxial cable was installed in a borehole. The TDR system allowed the researchers to correlate failure of a sandstone layer 213 to 229 m (700 to 750 ft) above the mine with the location of the mining face.

Dowding and Huang (1994) described the installation and monitoring of a 175 m (575 ft) long vertical cable in front of a longwall mining panel in southern Illinois. Data was acquired remotely, using telephone lines and modems, from 500 km (310 mi) away. Results from the project indicated deformation of the strata just in advance of mining that section. Correlations were made with surface subsidence that occurred at the same time.

Kawamura et al. (1994) also used TDR in coal mines in Illinois. They monitored three TDR cables above two longwall mine panels. A comparison was made of TDR with inclinomters and borehole extensometers. The cables were able to locate shear planes more accurately than the extensometers. The extensometer performance was a function of grout stiffness which caused localized stress concentrations and false readings. The inclinometers functioned well until they deformed to such an extent that the probe could not pass down the casing.

1.3.2 Waste Isolation Pilot Project

The Waste Isolation Pilot Project (WIPP) in Carlsbad, New Mexico, is a system of 650 m (2,150 ft) deep tunnels developed in bedded evaporite deposits for the purpose of storing nuclear waste material. Delays in the permitting of the project have made time-dependent movements of the rock salt a critical factor in the stability of the workings. As part of the rock mass monitoring program, five TDR cables were installed in the roofs of two rooms (Francke et al. 1994). Observation boreholes monitored with video cameras, roof extensometers, and convergence meters were also installed to correlate with TDR data. Cable behavior was correlated with laboratory testing. Results indicated that the TDR shear rate was ±4.3 mm/yr (0.69 in/yr) which agreed with borehole observations. The TDR cables were also effective in locating offsets between beds of rock.

1.3.3 Abandoned Hard Rock Mines

The Canada Centre for Mineral and Energy Technology (CANMET) used TDR to monitor the stability of the surface above abandoned metal mines in Ontario and Nova Scotia (Aston et al., 1994). They used 12.7 mm (½ in) O.D. smooth-walled aluminum cable (Cablewave Systems ½" Foamflex FXA) grouted into a borehole with portland cement. The cables were crimped to aid in locating distances. Results indicated that TDR could locate

deformations along rock discontinuities.

1.3.4 Slope Movements

The use of TDR in monitoring slope movements is relatively new. Only a few studies have been done.

1.3.4.1 Mining Highwalls. Most slope monitoring using TDR has been done with mine highwalls. The stability of such slopes is essential when large, expensive draglines are located at the crest. Most monitoring is done using inclinometers. The exposure of personnel on potentially unstable slopes, the lack of real-time reading capability, and the expense of inclinometer installations has led to the trial of coaxial cables as a means of monitoring slope stability.

Lord et al. (1991) and O'Connor et al. (1992) described the use of TDR to monitor the stability of a highwall at the Syncrude Canada Ltd. oil sand mine in northern Alberta. TDR using coaxial cables was compared with optical TDR (OTDR) using optical fibers, and electrolytic bubble sensor strings. Although the TDR method using coaxial cables seemed viable, problems occurred with data acquisition (O'Connor, 1991). Cable signatures were recorded using strip charts which made the comparison of cable changes over time difficult. O'Connor (1991) also noted that grout/cable bond in laboratory tests was a factor in whether the cable was sheared or merely slipped within the grout matrix. However, in the field, the cables indicated movements similar to those measured by an inclinometer installed nearby. O'Connor (1991) concluded that laboratory calibrations might not be reliable indicators for field behavior.

CANMET installed coaxial cables in five boreholes in the National Gypsum mine near Milford, Nova Scotia (Hayward et al., 1995). The purpose of the project was to monitor three highwalls which were close to several structures. Although the highwalls had been stable for up to forty years, there was some concern as to their stability. The TDR cables were monitored bi-weekly to monthly from June 1994 until September 1995. The cables showed that no movement in the highwalls occurred during that period.

1.3.4.2 Rock and Soil Slopes. Aston (1994a, 1994b, 1995) described the installation and monitoring of five TDR cable at the BC Hydro Checkerboard Creek site near Revelstoke, British Columbia. The cables were installed along with inclinometers and piezometers. The data indicated that no ground movement was apparent. Some small signal variations were observed but were not significant enough to indicate ground movement.

Caltrans installed a cable attached to an inclinometer (Kane and Beck, 1994) in the Last Chance Grade landslide beneath U.S. Highway 101 in Del Norte County, California. The cable and inclinometer casing were installed in an 85.3 m (280 ft) deep borehole backfilled with coarse sand. When read several months later, the TDR signature showed a spike at approximately 39.6 m (130 ft), the same depth as the deflection in the inclinometer casing. Another Caltrans installation in a landslide along U.S. 101 at Cloverdale is currently being monitored and is described by Freeman (1996).

Neil O. Anderson & Associates installed cables and an inclinometer in an embankment slope in Antioch, California and in at the crest of a San Joaquin River Delta levee near Stockton, California (Kane et al., 1996). TDR results from the Antioch embankment correlated well with the inclinometer in that no movement was indicated. Four coaxial cables were installed in the Delta levee. The first cable was a jacketed, 6 mm (0.24 in) braided cable, the second was identical but with the outside jacket removed, the third was a 16 mm (0.63 in) corrugated copper cable with a plastic jacket, and the fourth was a 13 mm (0.51 in) aluminum cable with a plastic jacket. The cables were separated by spacers and grouted with cement into a 12.2 m (40 ft) borehole. An inclinometer casing was installed on the crest about 8 m (26 ft) from the cables.

Figure 1-5 shows the inclinometer profile approximately four months after installation. A slide plane is clearly developing at 6.4 m (21 ft). Figure 1-6 shows TDR cable readings for June, August, and October for the corrugated copper cable. June was the initial reading after installation. The October reading was taken on the same day as the inclinometer profile. A spike is visible in the August and October readings, developing at the same depth as the base of the sliding mass shown by the inclinometer. The other cables showed a similar depth and development pattern. Gwinnup-Green (1996) showed that there is a correlation between the

surface movement of the slide and the growth of the spike in the corrugated copper cable.

One aspect of using TDR cables in soil slopes is the interaction between the cables, grout, and soil. Dowding and Pierce (1994a) addressed this issue. They felt that the grout must be stiff enough to stabilize the borehole, but compliant enough not to affect the movement of the soil mass. In other words, the grout should approximate the soil in strength and stiffness. To accomplish this, they proposed using a controlled low strength material (CLSM) (American Concrete Institute, 1989). It consists of a mixture of cement, fly ash, fine aggregate, and water with moduli between 70 MPa (71 psf) and 7 GPa (7050 psf) . It should be noted that Dowding and Pierce (1994a) presented only a theoretical view on grout/soil interaction. Kane et al. (1996) in their California Delta levee installation used a sand/cement/water mixture with satisfactory results. It was believed that, a failure of any size, even in a soil slope, would mobilize enough force to fracture the grout column and deform the cable.

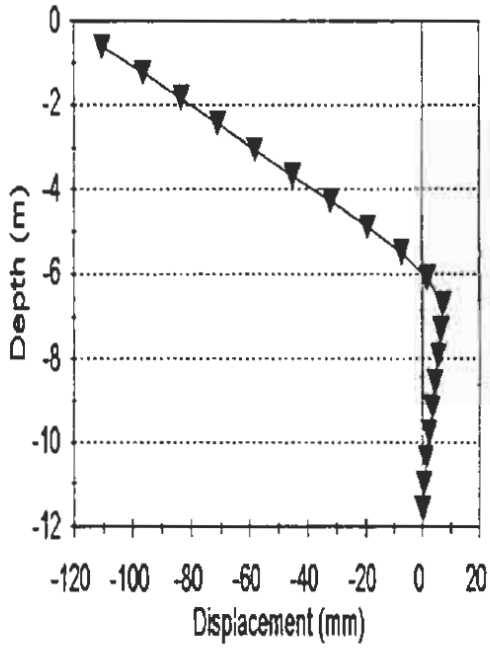

FIG. 1-5. Inclinometer Profile for Levee (Kane et al., 1996)

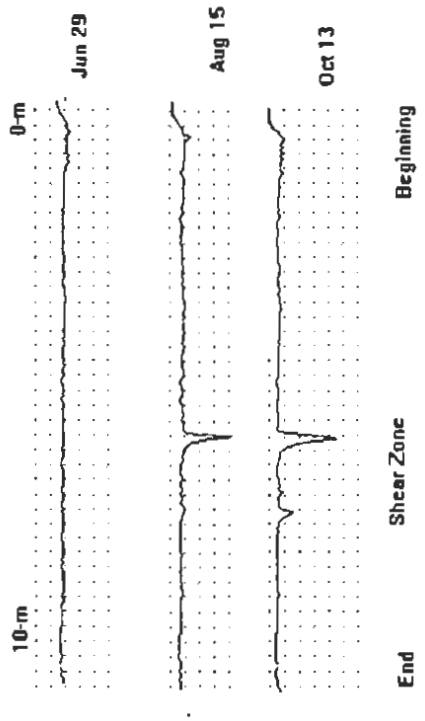

FIG. 1-6. Coaxial Cable in Levee Showing Development of Signature Spike (Kane et al., 1996)

Another consideration of using TDR cables in soil slopes is the behavior of the cable in an ungrouted hole. Logan (1989) investigated the TDR signatures of cables embedded in sand and gravel. The cables were 12.7 mm (½ in), smooth-walled, aluminum outer conductor with a copper-coated aluminum inner conductor surrounded by a polyethylene foam dielectric. His work was confined to laboratory tests and indicated that there was no change in the TDR signature when the cable was embedded in sand. Gravel, however, was effective in causing a change with shear. The reflection change with displacement was a function of the relative density and confining pressure of the backfill.

Caltrans has installed a number of cables in slopes since this research began. Some of the installations are described in Kane et al. (1996).

1.3.5 Other Geotechnical Applications

TDR was used in 1971 as part of the "cliper" (Collapse Location Indication by Pulsed Electromagnetic Radiation) system described by Sisemore and Stefani (1971). This method was used to locate the area of rock fractures and vaporization surrounding an underground nuclear blast. They used RG213U coaxial cable with lengths of 150 to 2750 m (500 to 9000 ft). They suggested that longer lengths could be used with 22 mm (7/8 in) air-filled helical cables or modifying the cable tester to accommodate a different cable. They were able to correlate the travel of the shock front and chimney collapse in the rock mass due to the explosion.

O'Connor (1989) described the installation of a TDR cable to monitor subsurface fracturing and caving with respect to solution mining. A mining company was experiencing well loss during the heating and removal of sulfur at depth. Consolidation of the limestone ore during heating was responsible for the loss of production. The corrosive sulfuric environment made TDR a viable alternative to more conventional methods, such as inclinometers. A 152 m (500 ft), 22 mm (7/8 in) diameter aluminum cable (Cablewave FXA 78-50J) was installed to a depth of 146 m (478 ft) and grouted in cement. No results have been published.

Another use for TDR was suggested by O'Connor et al. (1987) to locate and quantify

potential collapse in karst areas. Although proposed, no application has been attempted.

TDR also has been widely used in soil moisture measurements. Look and Reeves (1992) examined the use of TDR in monitoring moisture conditions in pavements and embankments. They stated that TDR was used by the Materials and Geotechnical Services Branch of the Queensland (New South Wales, Australia) Department of Transport. They described the application, but did not publish any data .

Appendix B Bibliography of Time Domain Reflectometry Applicable to Geotechnical Engineering is a nearly complete listing of references pertaining to TDR for geotechnical uses.

1.3.6 Structural Engineering Applications

The application of TDR to structural engineering applications is beyond the scope of this review. Additional information can be obtained from Huston et al. (1994) who described experiments using optical time domain reflectometry (OTDR). The authors embedded optical fibers in concrete and noted the response of the fiber light-transmission capabilities as a function of damage to the concrete. Schoenwald and Beckham (date unknown) described a system of OTDR for monitoring structures. Zimmerman et al. (date unknown) also discussed the theoretical aspects of using OTDR to monitor large structures. Research on the use of TDR to monitor for bridge scour is described by Dowding and Pierce (1994b) and others.

1.4 References

Aimone-Martin, C. T., and Oravecz, K. I. (1994). "Time Domain Reflectometry Calibration for the Waste Isolation Pilot Project." Preprint No. 94-144, for presentation at the SME Annual Meeting, Albuquerque, NM, 7 p.

Aimone-Martin, C. T., Oravecz, K. I., and Nytra, T. K. (1994). "TDR Calibration for Quantifying Rock Mass Deformation at the WIPP Site, Carlsbad, NM." *Proceedings*, Symposium on Time Domain Reflectometry in Environmental, Infrastructure, and Mining Applications, Evanston, IL, 507-517.

American Concrete Institute (1989). "State-of-the-Art on Controlled Low Strength Materials (CLSM)." ACI Publication, Committe 229.

Anderson, N. O. (1995). Personal Communication.

Andrews, J. R. (1994). "Time Domain Reflectometry." *Proceedings*, Symposium and Workshop on Time Domain Reflectometry in Environmental, Infrastructure, and Mining Applications, Northwestern University, U.S. Bureau of Mines Special Publication SP-19-94, 4-13.

Aston, T. (1994a). "Installation and Monitoring of Three TDR Cables, Checkerboard Creek Site, Near Revelstoke, B.C.: July 1993 to September 1993." Report No. 93-052 (CL), Submitted to B.C. Hydro by CANMET-MRL, 33 p.

Aston, T. (1994b). "Installation and Monitoring of Three TDR Cables, Checkerboard Creek and Marble Shear Block Sites, Near Revelstoke, B.C.: September 1993 to May 1994." Report No. 94-006 (CL), Submitted to B.C. Hydro by CANMET-MRL, 41 p.

Aston, T. (1995). "Installation and Monitoring of Three TDR Cables, Checkerboard Creek and Marble Shear Block Sites, Near Revelstoke, B.C.: May 1994 to October 1994." Report No. 94-034 (CL), Submitted to B.C. Hydro by CANMET-MRL, 48 p.

Aston, T., Bétournay, M. C., Hill, J. O., and Charette, F. (1994). "Application for Monitoring the Long Term Behaviour of Canadian Abandoned Metal Mines." *Proceedings*, Symposium and Workshop on Time Domain Reflectometry in Environmental, Infrastructure, and Mining Applications, Northwestern University, U.S. Bureau of Mines Special Publication SP-19-94, 518-527.

Dowding, C. H. and Huang, F. C. (1994). "Early Detection of Rock Movement with Time Domain Reflectometry." under review, *Journal of Geotechnical Engineering*, American Society of Civil Engineers, 120 (8), 1413-1427.

Dowding, C. H. and Pierce, C. E. (1994a). "Measurement of Localized Failure Planes in Soil with Time Domain Reflectometry." *Proceedings*, Symposium and Workshop on Time Domain Reflectometry in Environmental, Infrastructure, and Mining Applications, Northwestern University, U.S. Bureau of Mines Special Publication SP-19-94, 569-578.

Dowding, C. H. and Pierce, C. E. (1994b). "Monitoring of Bridge Scour and Abutment Movement with Time Domain Reflectometrry." *Proceedings*, Symposium and Workshop on Time Domain Reflectometry in Environmental, Infrastructure, and Mining Applications, Northwestern University, U.S. Bureau of Mines Special Publication SP-19-94, 569-578.

Dowding, C. H., Su, M. B., and O'Connor, K. (1988). "Principles of Time Domain Reflectometry Applied to Measurement of Rock Mass Deformation." *International Journal of Rock Mechanics, Mining Sciences, & Geomechanics Abstracts*, (25), 287-297.

Dowding, C. H., Su, M. B., and O'Connor, K. (1989). "Measurement of Rock Mass Deformation with Grouted Coaxial Antenna Cables." *Rock Mechanics and Rock Engineering* (22) 1-23.

Francke, J. L., Terrill, L. J., and Francke, C. T. (1994). "Time Domain Reflectometry Study at the Waste Isolation Pilot Plant." *Proceedings*, Symposium on Time Domain Reflectometry in Environmental, Infrastructure, and Mining Applications, Evanston, IL, 555-567.

Freeman, E. L. (1996). "Time Domain Reflectometry at Cloverdale Landslide, U.S. Highway 101, Sonoma County, California." Technical Research Report CE-96-03, Department of Civil Engineering, University of the Pacific, Stockton, CA, 32 p.

Gwinnup-Green, M. D. (1996). "Monitoring of Embankment Stability Using Embedded Coaxial Cables." Technical Research Report CE-96-02, Department of Civil Engineering, University of the Pacific, Stockton, CA, 15 p.

Haramy, K. Y., and Fejes, A. J. (1992). "Characterization of Overburden Response to Longwall Mining in the Western United States." *Proceedings*, Eleventh International Conference on Ground Control in Mining, The University of Wollongong, N.S.W., 334-344.

Hasenfus, G. J., Johnson, K. L., and Su, D. W. H. (1988). "A Hydrogeomechanical Study of Overburden Aquifer Response to Longwall Mining." Proceedings, Seventh International Conference on Ground Control in Mining, West Virginia University, Morgantown, 149-162.

Hayward, M. M., Felderhof, S. C., and Hill, J. D. (1995). "Monitoring of Highwall Stability at the National Gypsum Mine, N.S. Using Time Domain Reflectometry." Final Report, Contract No. 23440-4-0163/01-SQ, Canada Centre for Mineral and Energy Technology, Ottawa, Ontario, 27 p.

Huston, D. R., Fuhr, P. L., and Ambrose, T. P. (1994). "Damage Detection in Structures Using OTDR and Intensity Measurements." *Proceedings*, Symposium on Time Domain Reflectometry in Environmental, Infrastructure, and Mining Applications, Evanston, IL, 484-493.

Kane, W.F. and Beck, T.J. (1994). "Development of a Time Domain Reflectometry System to Monitor Landslide Activity." *Proceedings*, 45th Highway Geology Symposium, Portland, OR, 163-173.

Kane, W.F., and Beck, T.J., 1996, "Rapid Slope Monitoring." *Civil Engineering*, American Society of Civil Engineers, New York, p. 56-58.

Kane, W.F., Beck, T.J., Anderson, N.O., and Perez, H., 1996, "Remote Monitoring of Unstable Slopes Using Time Domain Reflectometry." *Proceedings*, Eleventh Thematic Conference and Workshops on Applied Geologic Remote Sensing, Las Vegas, NV, ERIM, Ann Arbor, MI, p. II-431-II-440.

Kawamura, N., Bauer, R. A., Mehnert, B. B., and D. J. Van Roosendaal (1994). "TDR Cables, Inclinometers and Extensometers to Monitor Coal Mine Subsidence in Illinois." *Proceedings*, Symposium on Time Domain Reflectometry in Environmental, Infrastructure, and Mining Applications, Evanston, IL, 528-539.

Logan, J. W. (1989). "Calibration of Time Domain Reflectometry Monitoring Cable in Granular Material." Report AFWL-NTE-TN-12-89, Civil Engineering Research Division, Weapons Laboratory, Kirtland AFB, NM, 34 p.

Look, B. G., and Reeves, I. N. (1992). "The Application of Time Domain Reflectometry in Geotechnical Instrumentation." *Geotechnical Testing Journal*, 15 (3), 277-283.

Lord, E., Peterson, D., Thompson, G., and Stevens, T. (1991). "New Technologies for Monitoring Highwall Movement at Syncrude Canada Ltd." Preprint CIM/AOSTRA 91-97, paper presented at CIM/AOSTRA 1992 Technical Conference, Banff, April 21-24, 97-1 to 97-8.

O'Connor, K. M. (1989). "Monitoring of Rock Mass Response to Solution Mining." Final Report, State Mining and Mineral Resources Institute, Grant No. 9C-BD-03-9-0000, New Mexico Tech, Socorro, NM, 26 p.

O'Connor, K. M. (1991). "Development of System for Highwall Monitoring Using Time Domain Reflectometry." Summary Report, U.S. Bureau of Mines Twin Cities Research Center, Minneapolis, MN, 75 p.

O'Connor, K. M., and Wade, L. V. (1994). "Applications of Time Domain Reflectometry in the Mining Industry." *Proceedings*, Symposium on Time Domain Reflectometry in Environmental, Infrastructure, and Mining Applications, Evanston, IL, 494-506.

O'Connor, K., Dowding, C. H., and Su, M.-B. (1987). "Quantification of Rock Caving Within Sinkholes by Time Domain Reflectometry." *Proceedings*, Second Multidisciplinary Conference on Sinkholes and the Environmental Impacts of Karst, Orlando, FL, 157-160.

O'Connor, K. M., Peterson, D. D., and Lord, E. R. (1992). "Development of a Highwall Monitoring System Using Time Domain Reflectometry." *Proceedings*, Ninety-fifth National Western Mining Conference, Denver, CO, 3 p.

Pierce, C. E., Bilaine, C., Huang, F.-C., and Dowding, C. H. (1994). "Effects of Multiple Crimps and Cable Length on Reflection Signatures From Long Cables." *Proceedings*, Symposium on Time Domain Reflectometry in Environmental, Infrastructure, and Mining Applications, Evanston, IL, 540-554.

Rohrig, J. (1931). "Location of Faulty Places by Measuring with Cathode Ray Oscillographs." *Elektrotech Z.*, 8.

Schoenwald, J. S. and Beckham, P. M. (date unknown). "Distributed Fiber-Optic Sensor for Passive and Active Stabilization of Large Structures." Reference Unknown, 565-558.

Sisemore, C. J. and Stefani, R. E. (1971). "Rock Fracture Measurements: A New Use for Time Domain Reflectometry." *Journal of Applied Physics*, 42 (7), 2701-2710.

Steiner, J. P., and Weeks, W. L. (1990). "Time-Domain Reflectometry for Monitoring Cable Changes. Feasibility Study." Project RP2308-18, Electric Power Research Institute, Palo Alto, CA, 59 p.

Su, M.-B. (1987). "Quantification of Cable Deformation with Time Domain Reflectometry Techniques." Ph.D. Dissertation, Northwestern University, Evanston, IL, 112 p.

Topp, G. C., and Davis, J. L. (1985). "Measurement of Soil Water Content Using Time Domain Reflectometry (TDR): a Field Application." Journal of Soil Science Society of America, 49, 19-24.

U.S. Bureau of Mines (1995). "Early Detection and Technical Animation of Rock Movements Using Time Domain Reflectometry." *Technology News*, No. 449, April 1995, 2 p.

Zimmerman, B. D., Murphy, K. A., and Claus, R. O. (date unknown). "Local Strain Measurements Using Optical Fiber Splices and Time Domain Reflectometry." Reference Unknown, 553-558.

2. LABORATORY TESTING

2.1 Introduction

In prior research for Caltrans, Kane and Beck (1994) used an RG59/U cable attached to an inclinometer casing and backfilled with coarse sand. When installed without grout, RG cables appear most likely to fail in tension as they are stretched between opposite sides of a shear plane, Figure 2-1. By relating the cables signatures to tensile strain, and then to failure, it was believed that a characteristic signature for RG cables under tension could be determined. In addition, knowing the tensile strength and failure strain of the cables would allow an estimate of relative movement across the failure surface.

A series of tests were run on RG59/U coaxial cable. The purpose for testing was to determine the ultimate tensile strength of the cable, and to identify the correlation between the reflection coefficient (measured in mρ) of a TDR signature and cable displacement.

In the past, both shear and tensile tests have been conducted on coaxial cables. Dowding et al. (1988) determined that when a cable was sheared, the TDR signature appeared as a localized spike that is directly proportional to the shear deformation of the cable. Figure 2-2a shows a TDR

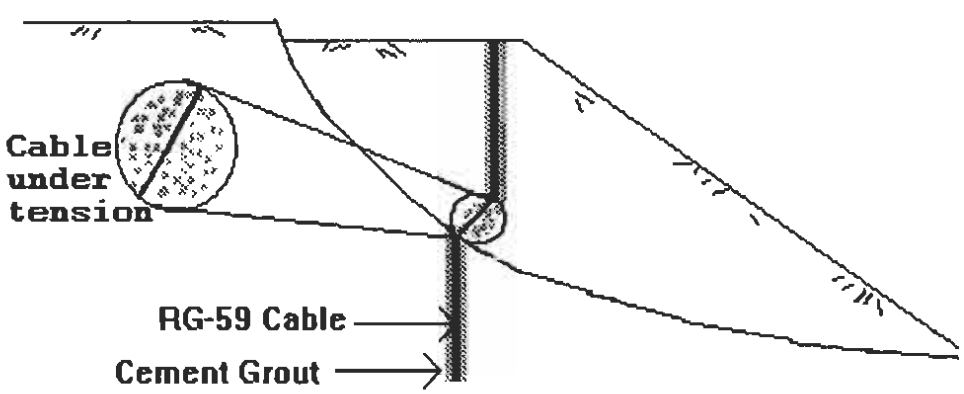

FIG. 2-1. Idealized Behavior of RG59/U Cable Across Shear Plane

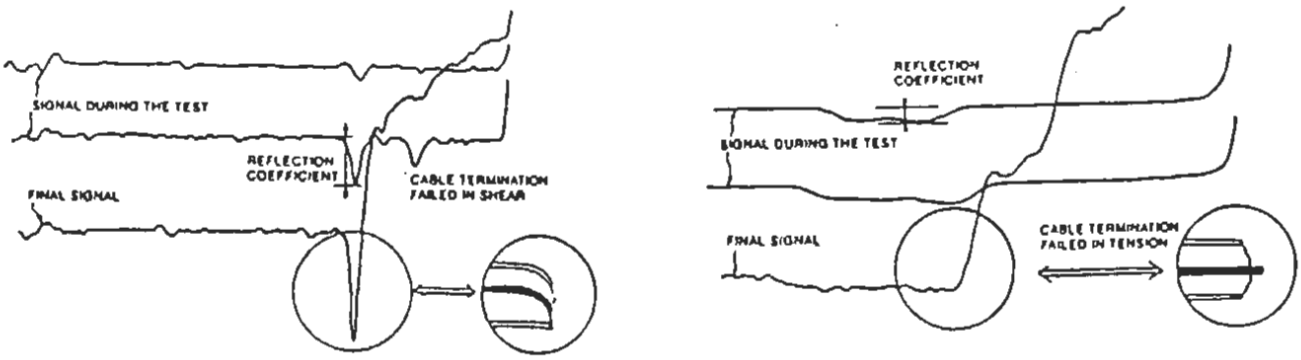

a. shear b. extension

FIG. 2-2. Comparison of TDR Signatures at Failure (Dowding et al., 1988)

signature during a shear test. When the cable was extended, necking occurred. The signature spike was less localized and included an increase in cable length until failure. Figure 2-2b shows a signature during an extension test.

Two configurations of the RG59/U coaxial cable were used for the tests: jacketed and unjacketed. The jacket is a plastic shield used for external protection. Table 2-1 describes the properties of the RG59/U coaxial cable.

The equipment used for the strength test included a United (Model FM-20) universal testing machine, to apply a tensile load on the cable; a United (Model 2000 X-Y) plotter, for real-time load-displacement curves; and a United (Model 0.5-2.0) extensometer to measure the extension of the RG59/U coaxial cable. In addition, the TDR readings were collected using a Tektronix 1502B cable tester with SP232 data communication device and stored in computer files (Tektronix, Inc., 1989). The data was then analyzed and graphically displayed using NUTSA software Version 1.02 (Huang et al., 1993) and Microsoft Windows Paintbrush Version 3.1 (Microsoft, 1992). Sections 3.6 and 3.7 describe how to acquire TDR signatures and import them into a report document.

TABLE 2-1 PROPERTIES OF RG59/U COAXIAL CABLE USED IN LABORATORY TESTING

Description/Manufacturer	Trade No.	Insulation	Velocity of Propagation
RG59/U/Belden	9259	Polyethylene Foam	0.78

2.2 Test Methods

Tensile strength and TDR tests were performed on the RG59/U coaxial cable. Forty specimens (twenty jacketed and twenty unjacketed) were individually tested for strength until failure. Failure was defined as a tensile strength of zero, or approximately zero.

2.2.1 Strength Testing

Twenty specimens (ten jacketed and ten unjacketed) were tested for an initial determination of tensile strength. The results were subsequently used as a baseline to estimate strength-deformation behavior for TDR readings. The remaining twenty specimens were tested for both tensile strength and TDR signature simultaneously. Load-displacement curves were also obtained from each test, and used to determine the strain and strength at both the yield and failure points.

The following steps were taken to perform each of the tensile tests. First, each specimen was cut to 0.61 m (2 ft) in length. A 0.61 m (2 ft) specimen was then placed and secured in the testing machine as shown in Figure 2-3. A distance of approximately (0.15 to 0.20 m) (6 to 8 in) was maintained between the grips. The extensometer was then clamped to the coaxial cable between the upper and lower grip. Figure 2-3 also shows a properly installed extensometer. The 0.15 m - 0.20 m (6 to 8 in)of cable between the grips was then extended using the tensile machine by applying minimal force of less than 10 lbs (45 N). Once the cable was fully extended, the distance between the grips was measured and recorded. Next, the extensometer was adjusted and the plotter turned on. During testing, a load-displacement curve was recorded as shown in Figure 2-4. Prior to failure, the extensometer was removed from the cable to avoid possible damage. Immediately after failure, the test was stopped and the final distance between the grips was measured and recorded This procedure was repeated for every specimen tested.

After the tensile tests were completed, the load-displacement curves were used to establish strains at which TDR signatures would be recorded. Figure 2-4 indicates points where TDR signatures were recorded.

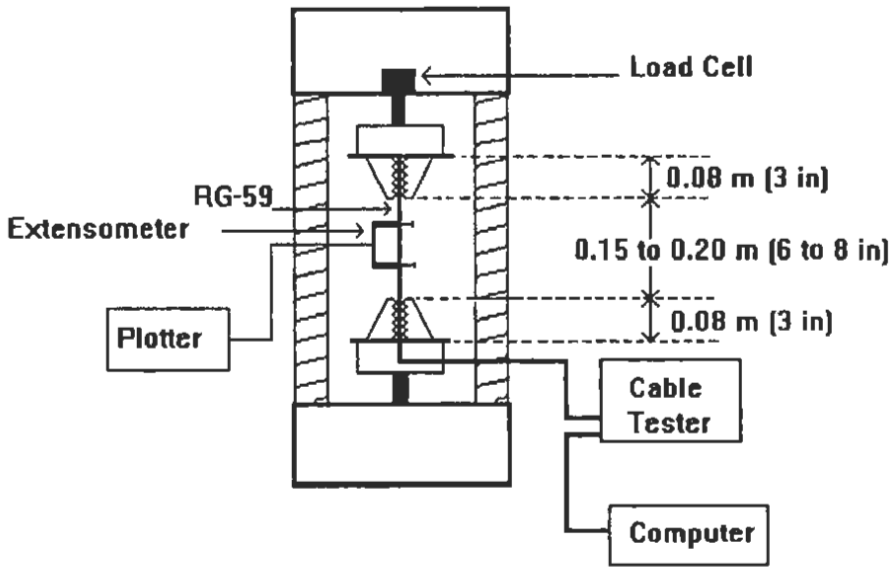

FIG. 2-3. Tensile Machine Including Cable and Extensometer Installation

2.2.2 TDR/Strain Testing

Of the forty specimens tested, twenty (ten jacketed and ten unjacketed) were used to determine TDR signatures. Figure 2-3 shows a complete installation of the RG59/U coaxial cable including the cable tester and the computer. The following test procedure was used to view and store TDR signatures for the twenty specimens tested:

1. The cable tester was turned on and the horizontal and vertical scales were set at 0.06 m (0.2 ft) and 100 mρ/div, respectively
2. The cable tester was connected to both the coaxial cable and the computer
3. The coaxial cable was placed between the grips and extended to its full length on the testing machine
4. The length between the grips was recorded
5. The test was begun by extending the cable until failure
6. TDR waveforms were acquired and stored at deformations estimated from the first phase of strength testing
7. A final waveform was aquired at failure

2.3 Results and Discussion

Tables 2-2 and 2-3 present summaries of the test results. Based on these results, the average strength was 610 N (137 lbs) for the jacketed cable and 547 N (123 lbs) for the unjacketed cable. The average yield strain was 0.07 for the jacketed and 0.09 for the unjacketed cable. The average strain at failure was 0.20 for the jacketed and 0.13 for the unjacketed cable.

From the strain results, it is possible to estimate the shear displacement of a slope when the cable fails. However, the relationship between strain at failure and a corresponding horizontal movement is highly non-linear and is only valid over a thin shear zone. This case is applicable for a grouted cable only. Ungrouted cables, or cables attached to inclinometer or piezometer casings, will not be subjected to such a failure mechanism. Assuming the width of a shear zone of about 12.7 mm (½ in), a reasonable estimate of slope movement can be made. A jacketed cable will fail at approximately 27.7 mm (1.1 in) of horizontal movement while an unjacketed cable will fail at about 25.8 mm (1 in).

Two assumptions were made in the strength testing. First, it was assumed that stopping the test temporarily (10 to 20 sec) did not affect the strength of the cable. Second, the rate of extension

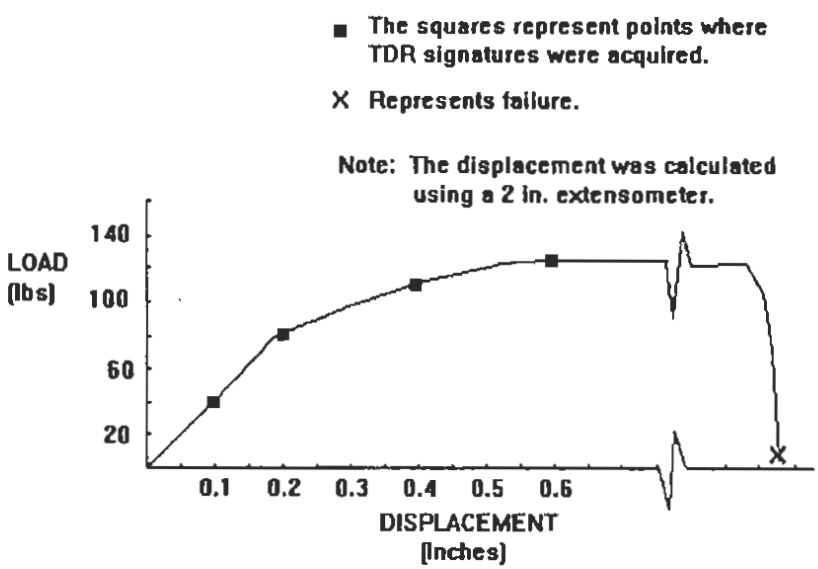

FIG. 2-4. Typical Load-Displacement Curve Including Points where TDR Signatures were Recorded

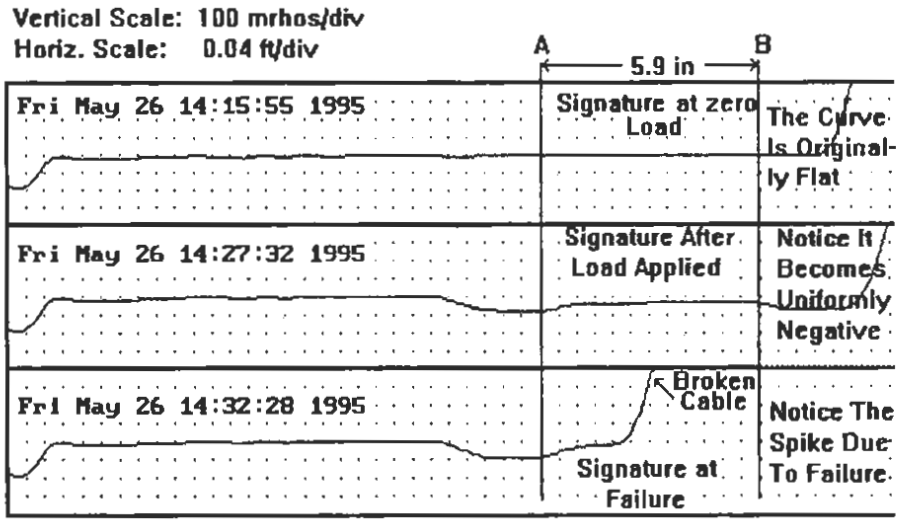

FIG. 2-5. Typical TDR Signatures of a Tensile Test

was assumed not to have affected the performance of the cable. At this time the effects are unknown. Further investigation is required to determine if these assumptions are valid.

For the TDR tests, five signatures were obtained for each of the twenty specimens tested (ten jacketed and ten unjacketed). The first TDR signature was recorded before the test, three TDR signatures were recorded during the test, and the last TDR signature was recorded immediately after failure. Figure 2-5 shows three signatures: the signature at the top was recorded before the test; the signature at the middle was recorded during the test; and the signature at the bottom was recorded immediately after failure. The signature at the top is completely horizontal between points A and B, which represent the upper and lower grips of the tensile machine. The signature in the middle was acquired while a load was being applied. Note that the signature has changed from its original shape. It has become uniformly negative between points A and B. The signature at the bottom of Figure 2-5 shows a broken cable. The signature maintained its shape near point A, but shifted up significantly at the failure point.

TABLE 2-2 TENSILE TEST RESULTS FOR JACKETED RG59/U CABLE

Rate of extension = 0.25 in./min				Extensometer Distance = 2.0 in.			
Cable Type	Original Length	Final Length	Strain @ Yield	Strain @ Failure	F yield	F failure	Comments
	(in.)	@ failure (in.)	(in./in.)	(in./in.)	(lbs)	(lbs)	
J - 1 - S	6.125	7.219	0.015	0.179	90	123	Failed @ connection
J - 2 - S	6.188	7.359	0.013	0.189	100	140	Failed @ connection
J - 3 - S	6.297	- - - -	0.013	- - - - -	90	130	Failed @ connection
J - 4 - S	6.063	7.281	0.088	0.201	100	143	Failed @ lower connection
J - 5 - S	6.156	7.469	0.088	0.213	100	144	Failed @ lower connection
J - 6 - S	6.125	7.375	0.075	0.204	80	132	Failed @ midspan
J - 7 - S	6.031	6.969	0.075	0.156	95	137	Failed @ upper connection
J - 8 - S	5.938	7.063	0.075	0.189	78	130	Failed @ midspan
J - 9 - S	6.188	7.281	0.075	0.177	85	120	Failed @ upper connection
J - 10 - S	7.500	8.750	0.063	0.167	80	130	Failed @ lower connection
J - 11 - S	5.906	7.250	0.075	0.228	85	128	Failed @ midspan
J - 12 - S	5.938	7.063	0.075	0.189	90	143	Failed @ lower connection
J - 13 - S	6.031	- - - -	0.063	- - - - -	80	125	Unknown
J - 14 - S	6.031	7.219	0.088	0.197	90	139	Failed @ lower connection
J - 15 - S	6.109	7.469	0.100	0.223	100	152	Failed @ upper connection
J - 16 - S	6.188	7.500	0.088	0.212	90	146	Failed @ lower connection
J - 17 - S	6.023	7.438	0.088	0.235	90	150	Failed @ upper connection
J - 18 - S	6.219	7.250	0.088	0.166	80	136	Failed @ the extensometer blade
J - 19 - S	6.344	7.688	0.100	0.212	100	150	Failed @ lower connection
J - 20 - S	6.500	7.875	0.100	0.212	100	148	Failed @ upper connection
AVERAGE	**6.195**	**7.418**	**0.072**	**0.197**	**90**	**137**	

TABLE 2-3 TENSILE TEST RESULTS FOR UNJACKETED CABLE

Rate of extension = 0.25 in./min				Extensometer Dist. = 2.0 in.			
Cable Type	Original Length	Final Length	Strain @ Yield	Strain @ Failure	F yield	F failure	Comments
	(in.)	@ failure (in.)	(in./in.)	(in./in.)	(lbs)	(lbs)	
U - 1 - S	6.344	6.938	0.013	0.094	90	118	Failed @ connection
U - 2 - S	6.375	7.125	0.100	0.118	100	116	Failed @ upper connection
U - 3 - S	6.094	6.781	0.088	0.113	100	128	Failed @ lower connection
U - 4 - S	6.000	6.313	0.063	0.052	85	110	Failed @ upper connection
U - 5 - S	5.875	6.281	0.050	0.069	80	110	Failed @ extensometer
U - 6 - S	5.875	6.500	0.100	0.106	100	124	Failed @ midspan
U - 7 - S	5.938	6.750	0.088	0.137	95	124	Failed @ extensometer
U - 8 - S	5.844	6.406	0.088	0.096	80	132	Failed @ extensometer
U - 9 - S	5.969	7.094	0.075	0.188	80	120	Failed @ upper connection
U - 10 - S	5.781	6.563	0.100	0.135	80	126	Failed @ extensometer
U - 11 - S	6.594	7.531	0.100	0.142	70	128	Failed @ the extensometer blade
U - 12 - S	6.781	8.156	0.100	0.203	90	136	Failed @ lower extension
U - 13 - S	6.969	8.156	0.075	0.170	85	132	Failed @ the extensometer blade
U - 14 - S	7.063	7.875	0.125	0.115	90	120	Failed @ the extensometer blade
U - 15 - S	7.219	7.976	0.088	0.105	90	128	Failed @ the extensometer blade
U - 16 - S	6.500	8.844	0.100	0.361	80	130	Failed @ the extensometer blade
U - 17 - S	6.375	7.094	0.125	0.113	100	124	Failed @ the extensometer blade
U - 18 - S	6.406	7.437	0.100	0.161	80	122	Failed @ lower extension
U - 19 - S	6.968	7.656	0.125	0.099	100	121	Failed @ the extensometer blade
U - 20 - S	6.906	7.500	0.075	0.086	80	118	Failed @ the extensometer blade
AVERAGE	**6.394**	**7.249**	**0.089**	**0.133**	**88**	**123**	

2.4 Conclusions

Overall, the laboratory test results verify similar tests conducted by others such as Dowding et al. (1988). The same signature for tensile strain and failure was obtained under similar test conditions.

Throughout the laboratory testing, a common problem was encountered. Most of the specimens failed at one of the connections. Failure at the connection evidently occurred due to high stress concentrations caused by the grips on the tensile machine. Nevertheless, it is believed that this did not affect the test results significantly.

For best results when comparing TDR signatures, the following is recommended:

1. Increase the sensitivity of the vertical scale on the cable tester (less than 50 mρ/div, if possible) in order to see small changes in the TDR signature

2. When comparing signatures, use the same vertical and horizontal scale, including the same initial distance

3. Set the cursor at the left-hand side of the screen on the cable tester when acquiring a signature

4. Refer to Sections 3.6 and 3.7 for information on acquiring and manipulating data.

The TDR signatures suggested the following:

1. Visible changes in the reflection coefficient along any particular length of the cable represent deformation at that point

2. When a cable breaks, the reflection coefficient at that point increases to +1

3. Tensile deformation is indicated by a distinct negative trough. Figure 2-5 shows the different phases of a typical TDR signature under tension

4. Movement along a shear plane is estimated to be approximately 25.4 mm (1 in) at cable failure (RG59/UBelden 9259 only) for single grouted cables. Ungrouted cables, or cables attached to casings will not provide reliable information

5. The slight difference in response between jacketed and unjacketed cables does not justify the time involved in stripping cable jackets. Jacketed cables are recommended.

2.5 References

Dowding, C. H., Su, M. B., and O'Connor, K. (1988). "Principles of Time Domain Reflectometry Applied to Measurements of Rock Mass Deformation." *International Journal of Rock Mechanics, Mining Science, & Geomechanics Abstract*, 287-297.

Huang, F. C., O'Connor, K. M., and Yurchak, D. M., and Dowding, C. H. (1993). "NUMOD and NUTSA: Software for Interactive Acquisition and Analysis of Time Domain Reflectometry Measurements." Bureau of Mines Information Circular 9346, 42 p.

Kane, W.F. and Beck, T.J. (1994). "Development of a Time Domain Reflectometry System to Monitor Landslide Activity." *Proceedings*, 45th Highway Geology Symposium, Portland, OR, 163-173.

Tektronix, Inc. (1989). "SP232 Serial Extended Function Module Operation/Service Manual." Tektronix, Inc., Redmond OR, 103 p.

Microsoft Corporation (1992). Microsoft Windows Version 3.1. User's Guide. Microsoft Corporation, Redmond, WA.

3. INSTALLATION AND RESULTS

3.1 Site Description and Geology

The test site was located between Post Miles 7.4 and 8.1 adjacent to the eastern side of the northbound lanes of U.S. Interstate Highway 5 in Kern County, California. It is in the Tehachapi Mountains of the Sierra Nevada geomorphic province, just south of the Great Valley province, Figure 1-1. The site is referred to as the "Grapevine Slide", one of at least five landslides that exist on the west side of Grapevine Peak (Samuel, 1995). Grapevine Peak is approximately 1468 m (4815 ft) high and marks the western extremity of the Tehachapi Mountains, Figure 3-1. Figures 3-1 and 3-2 show aerial views of the site and Figure 3-3 gives the location with respect to Interstate 5.

FIG. 3-1. Aerial View of Interstate 5 Looking South into Grapevine Canyon. Grapevine Peak is on the left.

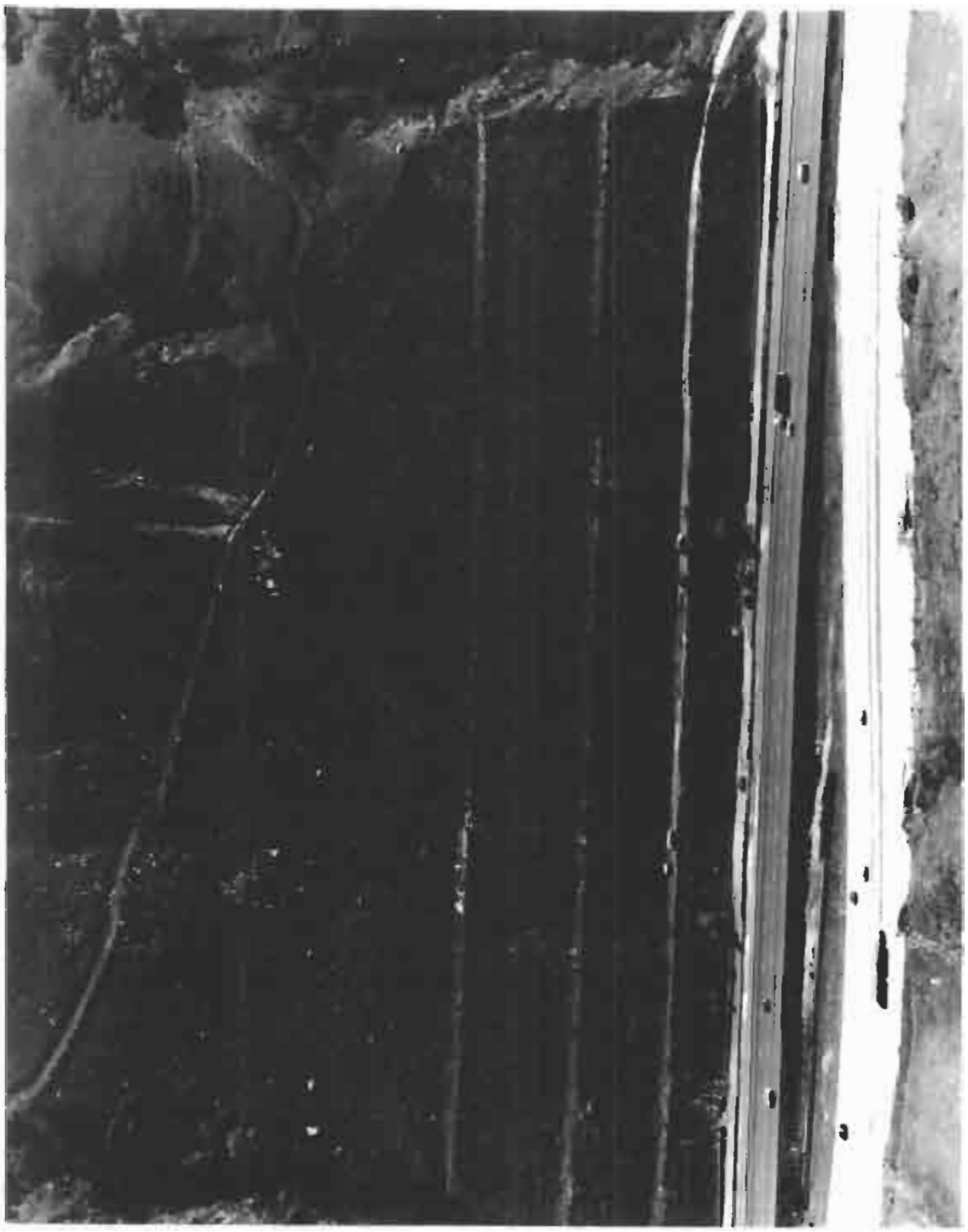

FIG. 3-2. Aerial Oblique View of Grapevine Landslide

Samuel (1995) believed that the Grapevine slide is the leading slide of a series of slides on Grapevine Peak dating back at least 10,000 years to either Late Pleistocene or Early Holocene. Only the Grapevine slide appears to have moved in recent time. The toe of the slide has been removed by erosion from Grapevine Creek and excavation for the Interstate 5 right-of-way.

A subsurface investigation consisting of four exploratory boreholes was conducted by the California Department of Transportation (Samuel, 1995). Rocks encountered included highly fractured and jointed diorite, granite gneiss, and granite. Outcrops were foliated and schistose. Rock Quality Designation (RQD) values ranged from 0 to 77%, although values were mostly in the 0 to 10% range. This is indicative of extremely fractured rock, which is very poor for engineering purposes. The material tends to act more as a soil mass and exhibits the characteristics of a circular failure: a noticeable head scarp and distinguishable toe.

The slope is relatively steep, mostly at angles of approximately 2H:1V to 1½H:1V. The active portion of the slide was approximately 100 m (330 ft) high and 105 m (350 ft) long. There was a noticeable head scarp from which water flowed freely during a visit in early February, 1995. The failure plane appeared to daylight in the right shoulder of the northbound lanes. Broken pavement had heaved about 0.15 m to 0.2 m (6 in to 8 in) in places. A low retaining wall was disturbed and leaning out toward the traffic lanes. In February, 1995, the lower portion of the slide had numerous springs which flowed freely. Since that time sub-horizontal drains and a collection system have been installed and water flow has diminished. In August 1995, construction began to install a system of 732 tie-back restraints. Tieback lengths ranged from 46 to 78 m(150 to 255 ft) (*Engineering News-Record*, 1996)

3.2 General Configuration

The TDR installation included a cable tester connected to a coaxial cable. The cable was attached to either an inclinometer or piezometer casing which was grouted into a borehole. The cable tester was connected to a datalogger which records and stores reflections. The datalogger controls the cable tester and supplies power during measurements. It was planned to collect the data by computer automatically from a remote location using a cellular phone. This feature was not operational during the study. The complete installed configuration is shown in Figure 3-3.

3.3 Cables

A total of three RG59/Ucables were installed at the Grapevine site in the locations shown in Figure 3-4. TDR 1 was 62.7 m (206 ft) long from the top of the hole. TDR 2 was 78.6 m (258 ft) long, and TDR 3 was 90.2 m (296 ft). long. TDR 1 and TDR 2 cables had a stranded inner conductor, while TDR 3 had a solid wire inner conductor.

Other types of coaxial cables are available. Each type has advantages in terms of ease of installation, weight, and material properties. Table 3-1 contains a list of various cables in use in California.

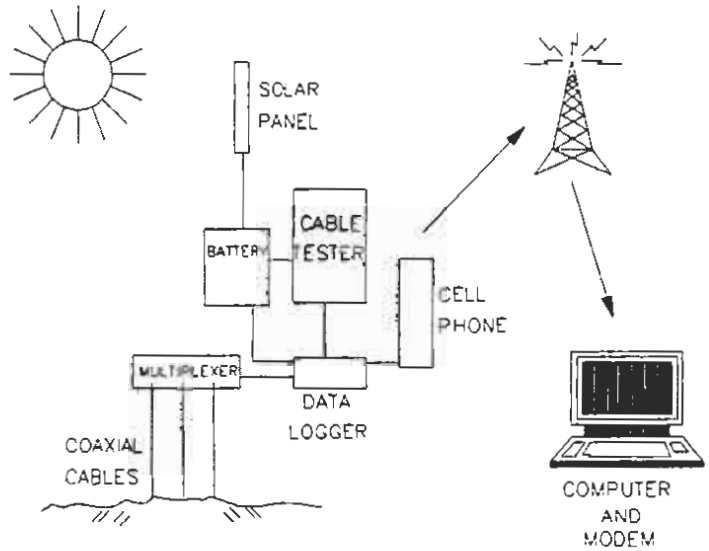

FIG. 3-3. Schematic of Grapevine TDR Installation

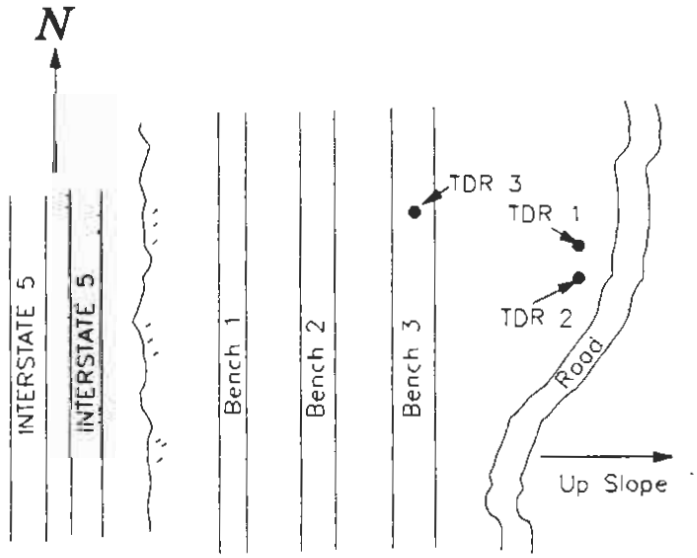

FIG. 3-4. Approximate Locations of TDR Cables on Grapevine Landslide (Not To Scale)

TABLE 3-1 TYPES OF CABLES USED FOR LANDSLIDE MONITORING

Cable Type	Brand	Trade No.	Velocity of Propagation	Approx. Diam. in (mm)	Locations	Comments
RG-6/U	Radio Shack	unk.	0.82	0.30 (7.6)	Cloverdale, Cuesta Grade, Devil's Slide, Morro Bay, Willow Creek	Solid wire inner conductor, BNC connector
RG59/U	Belden	8241	0.66	0.42 (6.2)	Redwood Park, Willets	Solid wire inner conductor, BNC connector
RG-59/U	Belden	9259	0.78	0.24 (6.2)	Grapevine	Twisted wire inner conductor, BNC connector
RG-59/U	Belden	9275	0.82	0.24 (6.2)	Grapevine, Delta Levee	Solid wire innerconductor, aluminum foil shield, BNC connector
FLC 12-50J	Cablewave	810918-001	0.88	0.5 (12.7)	Delta levee, Devil's Slide	Corrugated copper outer conductor; N Female connector with N-to-BNC adapter
FXA 12-50J	Cablewave	810953-003	0.81	0.5 (12.7)	Delta levee, Bay Area embankment	Smooth aluminum outer conductor; N Female Connector w/ N-to-BNC adapter

3.4 Installation

Test holes were made with skid mounted Longyear 34 and 38 drill rigs utilizing 89 mm (3.5 in) o.d. HZ drill stem with either a Christensen HWD3 61 mm (2.4 in) i.d. core barrel or a Mission SD4 114 mm (4.5 in) down-hole hammer. Test holes and cores were logged by a Caltrans engineering geologist at the time they were drilled. Cores obtained were preserved in sample boxes and taken to the Caltrans laboratory.

TDR 1 and TDR 3 were attached to the Caltrans PVC inclinometer casings. TDR 2 was attached to a PVC piezometer. In both cases the holes were grouted by the installer. The TDR cables were installed jointly with other geotechnical instrumentation in the three vertical exploratory boreholes drilled through the slide plane. TDR 1 and TDR 2 were located in the naturally occurring

upper bench of the site. TDR 3 was located on the third, or upper, graded bench of the highway cut. For relative locations of test holes see Figure 3-4.

The TDR 1 cable was attached to the outside of the inclinometer casing with electrical tape at 3.1 m (10 ft) intervals. This was to keep the cable from spiraling around the casing as it was installed. Inclinometer casing was placed to a depth of approximately 62.7 m (206 ft). To ensure deformation, an attempt was made to keep the TDR cable on the downhill (west) side of the casing as it was placed. The annular space around the inclinometer casing was backfilled with cement grout. The TDR 2 cable was attached to piezometer tubing which was placed to an approximate depth of 78.6 m (258 ft). The hole was backfilled to the 30.5 m (100 ft) depth with pea gravel. A 1.5 m (5 ft) bentonite plug was then placed and the remainder of the hole was backfilled with cement grout.

The TDR 3 cable was also attached to the outside of the inclinometer casing with electrical tape at 3.1 m (10 ft) intervals. It was kept on the downhill (western) side of the casing as it was placed to the 90.2 m (296 ft) depth in the borehole. The casing was backfilled with cement grout. Remote data acquisition equipment was installed as shown in Figures 3-3 and 3-5.

3.5 Electronics

3.5.1 Overview

The system installed at Grapevine used a Tektronix 1502B cable tester and a Campbell Scientific CR10 datalogger with a cellular phone as the primary components. Appendix C Vendors of Equipment for TDR Measurements contains a list of other providers of equipment. A photograph of the equipment is shown in Figure 3-5 and components are labeled in Figure 3-6. Schematic wiring diagrams are included as Appendix D Wiring Diagrams for Data Acquisition Equipment. The components are described in more detail below, and a list of necessary equipment is given in Table 3-2.

A Tektronix 1502B cable tester was used for all data acquisition. Two testers were purchased: one for field installation and the other for laboratory and mobile field data collection.

FIG. 3-5. Photograph of Remote Data Acquisition Equipment Installed at Grapevine Site

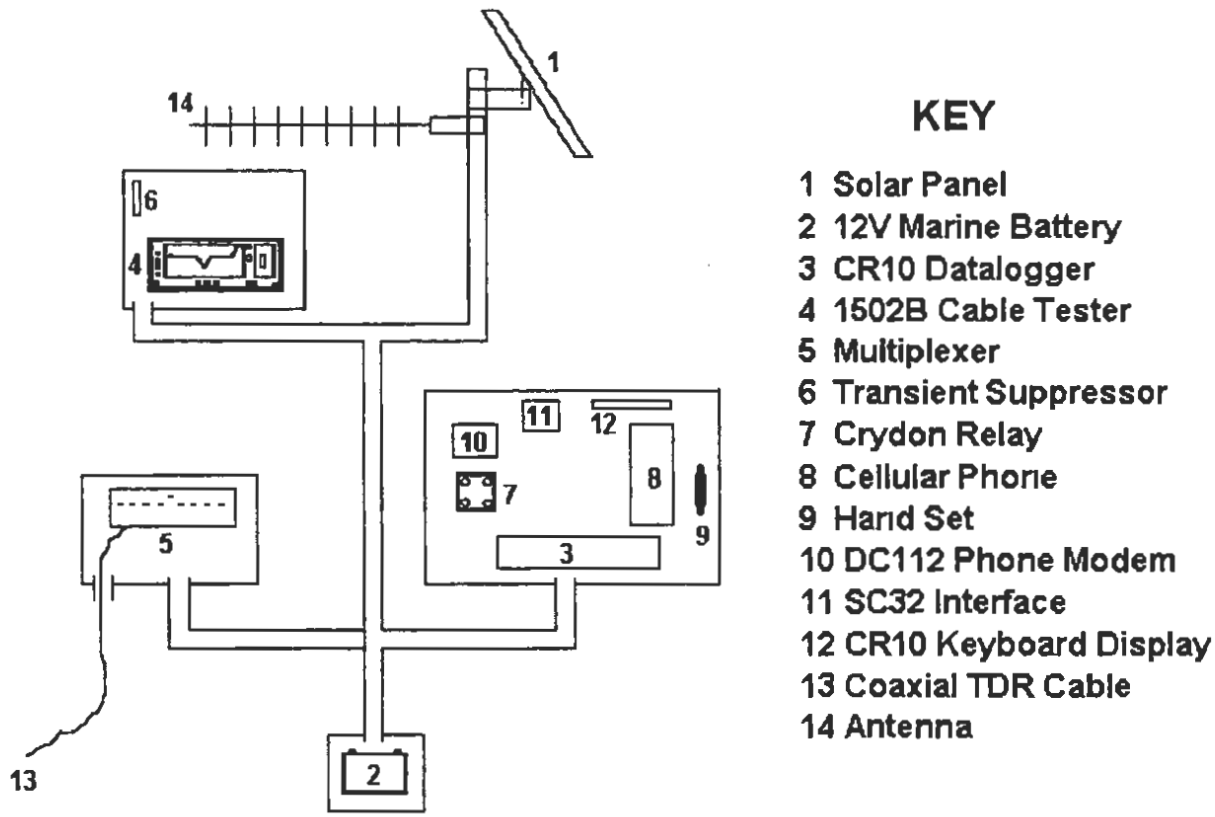

FIG. 3-6. Identification of Remote Data Acquisition Components

3.5.2 Cable Tester and Peripherals

TDR data can be acquired in several ways. The Tektronix 1502B cable tester has an options port for several modules. A thermal printer can be plugged in for printing a hard copy of the tester screen, an extended function module can replace the printer for direct downloading of data to a computer, or a synchronous measurement device can be inserted to communicate with a data logger. With the latter two options, data manipulation can be accomplished by downloading digitized files in ASCII format. The laboratory cable tester in this project used an extended function module, while the field installation used the synchronous measurement device.

3.5.2.1 Tektronix 1502B Cable Tester. The 1502B tester is manufactured by Tektronix (Tektronix, Inc., 1994). As mentioned previously, it uses radar principles to determine the electrical characteristics of metallic cables, and can be used to find faults in coaxial, twisted pair, or parallel cables. The tester generates a rapidly rising step signal which pulses down the cable and detects any discontinuities by reflections in the cable due to changes in impedance.

TABLE 3-2 TDR SYSTEM EQUIPMENT

Item	Description
Tektronix 1502B TDR Cable Tester	Cable tester
SDM 1502 Communication Interface	Allows connection of data logger to cable tester
PS1502B Power Control Module	Provides 12V power to data logger
SP232 Module and Software	Connection to PC computer (mobile system)
Battery Pack for 1502B Cable Tester	Rechargeable power for cable tester (mobile system)
Notebook Computer	Downloading cable signatures (mobile system)
CR10 Measurement and Control Module	Data logger
TDR PROM for CR10	Specialized TDR program chip for data logger
ENC TDR	Enclosure box for cable tester
ENC 12/14	Enclosure box for data logger and cell phone, multiplexer
Bracket Kit	Mounts CR10 to enclosure box
CR10KD Keyboard Display	Keyboard
SC32A Optically Isolated RS232 Interface	Provides electronic connection to computer and hand-held programmer
SDMX50 Coaxial Multiplexer	50 ohm coaxial multiplexer for TDR cables
MSX18R Solar Panel with Mounts	Electrical supply
12V Deep Cycle Marine Battery	Electrical storage
DC1765 Cellular Phone	Motorola cell phone
Cellular Antenna and Cable	Antenna and cable
Crydon Relay	Controls power to cellular phone
Datalogger Support Software	Described in Table 3-4

3.5.2.2 SP232 Extended Serial Function Module. The SP232 Extended Serial Function Module is a plug-in interface serial for the 1502B cable tester (Tektronix, Inc., 1989). It serves as the data communication device between the cable tester and the computer. It is controlled by the computer and uses the SP software to download cable signatures to the computer. Table 3-2 shows the cable pin connections necessary to connect to the serial port of a PC computer.

TABLE 3-3 PIN CONFIGURATIONS FOR COMPUTER-CABLE TESTER CABLES

PIN CONFIGURATION	
DB9	**DB29**
1	8
2	3
3	2
4	20
5	7
6	6
7	4
8	5
9	22

3.5.3 Datalogger and Multiplexer

The CR10 measurement and control module serves as a datalogger and controller for the remote data acquisition system (Campbell Scientific, 1991). It has 64K bytes of RAM divided into five areas. Two areas are reserved for the system and the input program. The other areas can be allocated as needed and include:

1. Input storage to hold the results of measurements
2. Intermediate storage for intermediate results during calculation processes
3. Final storage for values that will be transferred by cable or telecommunications to a PC, printer, or other final output device

Programming of the CR10 is done with a hand-held keypad, or by computer and downloaded and compiled.

3.5.4 Cellular Phone

Any cellular phone can be used. A Motorola phone was used in this research. A handset was obtained and was used with the phone. It is not necessary to have a handset, but it is helpful to check for signal quality.

3.5.5 Power Source

A 12 volt DC power supply is necessary for the 1502B cable tester. For the mobile system, a rechargeable battery is installed in the back of the tester. An electrical cord plugs into a 120V AC outlet to supply power directly, or to recharge the battery.

For remote data acquisition, a continuous supply of power is necessary at the site. A solar collector panel supplying DC power directly to a deep cycle marine battery was used in this study. Results over six months indicate satisfactory performance. However, water during a heavy storm shorted the wires leading from the solar collector to the battery. The wires burned but the system components were undamaged.

3.6 Software

Several software programs are used with the datalogger and communications equipment. The list of programs and their functions is given in Table 3-4.

3.6.1 SP

SP was developed by Tektronix (Tektronix, 1989) to allow a direct link between the PC and the 1502B cable tester. It is DOS-based, and the screen looks similar to the screen of the 1502B. The user prompts the software to contact the cable tester and the data is downloaded to the PC. The appearance of the PC screen is the same as the tester. The screen may then be saved as an ASCII file for use with other software such as NUTSA or a spreadsheet.

3.6.2 Campbell Scientific Programs

The suite of programs developed by Campbell Scientific (1995) allows the development and implementation of data acquisition and storage from the cable tester and data logger. A brief description of the programs and a reference for each is contained in Table 3-4.

TABLE 3-4 PROGRAMS USED IN TDR DATA ACQUISITION AND REDUCTION

Program	Function	Source
SP	Download data from cable tester to PC	Textronix
EDLOG	Develop and document programs for CR10 data logger	Campbell Scientific
GRAPHTERM	Terminal emulator for collecting data from CR10 data logger	Campbell Scientific
SPLIT	Data reduction for downloaded data	Campbell Scientific
TELCOM	Access CR10 datalogger remotely by direct wire, modem, or radio modem	Campbell Scientific
SMCOM	Collect and store data from storage modules	Campbell Scientific
NUTSA	Display and compare TDR signatures interactively	U.S. Bureau of Mines

3.6.3 NUTSA

To compare signatures over time, a computer program was developed by Northwestern University and a user's manual was written by Huang et al. (1993). The Northwestern University TDR Signature Analysis (NUTSA) program allows the user to view up to three waveforms simultaneously. The program displays up to three waveforms just as they look on the screen of the 1502B cable tester. If desired, two waveforms can be viewed with the third location used to display the difference between the two. Figure 3-7 describes one method to edit TDR signatures and import them into a word processor document.

CANMET is currently developing a program similar to NUTSA that will be Windows™-based (Hamil, 1995).

Importing TDR Signatures into a Document

1. Run NUTSA and open files to be viewed
2. View the waves
3. Press "Print Screen" on the computer keyboard to store the screen as a graphic in the Windows clipboard
4. Open Windows Paintbrush
5. Click pointer on "Options" and set "Image Attributes" to "Black and White"
6. Click pointer on "Edit" and "Paste" the clipboard graphic into Paintbrush
7. Click pointer on "Pick" and click on "Inverse" to make background white and lines black
8. Use Paintbrush tools to edit signature(s) as desired
9. Store as *.bmp or *.pcx (uses less memory) file
10. Open word processor
11. Follow word processor directions to create figure in text of document

FIG. 3-7. One Method to Modify NUTSA Signatures for Use in a Report Document

3.7 Data Acquisition

The system can uses several methods to acquire data. One is by direct connection of a cable to a laptop computer. This requires a site visit by personnel. The other methods involve the use of a datalogger. The datalogger can be accessed on-site by a hand-held keyboard display (CR10KD). Remote access requires the use of a radio transceiver, cellular phone, or satellite uplink.

3.7.1 Data Acquisition by Cable Tester and Laptop Computer

The easiest and most straightforward way to obtain cable data is by visiting the site with cable tester and laptop computer. The tester must have the SP232 module and the SP program must be loaded on the computer. Figure 3-8 contains the procedure for obtaining signatures using the laptop.

Program: TDR Cable Data Acquisition By William F. Kane
Flag Usage:
Input Channel Usage:
Excitation Channel Usage: None
Control Port Usage: C1 thru C3 are TDR communications
C4 is cable tester power
C5 is mobile phone and modem power
Pulse Input Channel Usage: none used
Output Array Definitions:

*** 1 Table 1 Programs** **01: 600 Sec. Execution Interval** **01: P86 Do** **01: 1 Call Subroutine 1** **02: P End Table 1**	Table 1 is best used to call subroutines Run program every 600 seconds (10 minutes) Call Subroutine 1 to read cable
*** 2 Table 2 Programs** **01: 0.0000 Sec. Execution Interval** **01: P End Table 2**	Table 2 is not used
*** 3 Table 3 Subroutines** **01: P85 Beginning of Subroutine** **01: 1 Subroutine Number**	Contains subroutines for reading cables Subroutine 1 reads a single cable in multiplexer
02: P10 Battery Voltage **01: 1 Loc :**	Read battery voltage and store voltage in intermediate location #1
03: P17 Module Temperature **01: 2 Loc :**	Read internal temperature of datalogger and store in intermediate location #2
04: P86 Do **01: 45 Set high Port 5**	Turn on cellular phone connected to relay at location C5 on datalogger
05: P86 Do **01: 44 Set high Port 4**	Turn on cable tester attached to location C4 on datalogger
06: P22 Excitation with Delay **01: 1 EX Chan** **02: 0000 Delay w/EX (units=.01sec)** **03: 500 Delay after EX (units=.01sec)** **04: 0.0000 mV Excitation**	Wait 5 seconds (500 x 0.01 sec) before taking TDR measurement
07: P100 TDR Measurement	Take cable measurement

01: 22 SDM1502 Address	Location of cable tester for datalogger
02: 1 Waveform (256 locs)	256 storage points will be used
03: .35 Probe length (meters)	Used only for soil moisture measurement
04: -1 Cable length (meters)	Sets cursor at -1 (useful when overlapping signatures
05: 1001 MMMP--Mux & Probe Selection	Accesses multiplexer #1, cable #1
06: 4 Loc :	Begin storing TDR data in intermediate locations #4 through #260 (256 points). The first 251 are cable signature, next 5 are settings.
07: 0.0000 Mult	Not used
08: 0.0000 Offset	Not Used
08: P68 Extended 4 Digit	
01: 4	Number of reflections averaged by 1502
02: 81	Velocity of propagation: % speed of light
03: 3	Distance/div: 3 = 0.25 m/div (see manual)
04: 80	mρ/div = 500/(10^(gain/80) (see manual)
05: 0000	Not used
06: 0000	Not used
07: 0000	Not used
08: 0000	Not used
09: P86 Do	
01: 54 Set low Port 4	Turn off cable tester.
10: P86 Do	
01: 55 Set low Port 5	Turn off cellular phone
11: P95 End	
12: P End Table 3	
*** A Mode 10 Memory Allocation**	Sets number of storage locations for data
01: 260 Input Locations	260 Locations total
02: 600 Intermediate Locations	600 Intermediate locations for data
03: 0.0000 Final Storage Area 2	Not used
*** C Mode 12 Security**	Not Used
01: 0 LOCK 1	
02: 0 LOCK 2	
03: 0000 LOCK 3	

Input Location Assignments (with comments): Use optional to locate data storage

Key:
T=Table Number
E=Entry Number
L=Location Number

T: E: L:
3: 2: 1: Loc :
3: 3: 2: Loc :
3: 7: 4: Loc :

3.7.3 Communication Programs

The datalogger uses two communication programs to obtain data. GraphTerm emulates a computer terminal and is used to download from the datalogger directly to the PC. Telcom allows the user to call the unit and access data. Instructions for using both programs are given in Figures 3-9 and 3-10. Note that various equipment and user preference may dictate changes. Refer to the PC208 instruction manual (Campbell, 1995) for additional information.

Connecting to the Datalogger and Downloading a Program Using a Notebook PC

1. Create *.DLD (download) file using EDLOG

2. Hook-up SC32A to serial port of notebook PC

3. Type "GT" to run GraphTerm from DOS

4. Enter Station Name OR

5. Create *.STN (station) file for datalogger (skip this step if station file already exists)
   a. STATION NAME: grpvingt (example)
   b. DATALOGGER TYPE: CR10
   c. ASYN COMM ADAPTER: COM1 (serial port address)
   d. COMM BAUD RATE: 9600
   e. DATA FILE FORMAT: comma delineated ASCII
   f. FINAL STORAGE AREA: area 1
   g. INTERFACE DEVICE: SC32A

6. Use "C" option to establish communication with datalogger (datalogger will respond with * prompt)

7. Use "K" option to download PC time

8. Use "D" option to download program

9. Use "M" option to verify that program is running and data is correct

10. Use "Q" option to quit (note: serial port must be reinitialized using DOS mode command before another device is used on that port -- see manual)

FIG. 3-9. Steps to Download Program to Datalogger

Accessing Datalogger Remotely

1. Type "TELCOM" to run Telcom program from PC

2. Enter Station Name OR

3. Create *.STN (station) file for datalogger (skip this step if station file already exists)

a.	STATION NAME:	grpvintl (example)
b.	DATALOGGER TYPE:	CR10
c.	FIX DATALOGGER CLOCK:	when 30 sec off (3600 = 1 hr)
d.	FINAL STORAGE AREA:	area 1
e.	DATA COLLECTION METHOD:	since last call; append file
f.	NUMBER OF ARRAYS TO BACKUP:	0
g.	DATA FILE FORMAT:	comma delineated ASCII
h	PRIMARY CALL INTERVAL:	10,080 (minutes = once/week)
i.	RECOVERY CALL:	15 (minutes)
j.	REPS:	4
k.	RECOVERY INTERVAL #2:	1440
l.	MAXIMUM TIME (MINUTES):	10
m.	NEXT TIME TO CALL:	automatic
n.	INTERFACE DEVICES:	enter in order from PC to datalogger; see PC208 manual for details

4. Use "C" option call the specified station (regardless of whether it is time to call)

5. Use "G" option to download all data regardless of data collection method specified. Data is stored in a file named for the station file, e.g., "grpvintl.dat"

6. Use "D" option to end

FIG. 3-10. Steps to Access Datalogger Remotely

3.8 Signature Analysis of Grapevine TDR Cables

TDR signatures were collected from Grapevine cables by means of site visits and laptop computer data acquisition. Data was required at the beginning of the research project since it

appeared the slope was moving.[1] Data was collected on April 27, June 16, November 13, 1995 and January 20 and April 6, 1996. Signature resolutions varied from low to high. High resolution signatures have the disadvantage of requiring several tester screens to obtain the full length of a cable.

Early inclinometer readings and cable signatures showed no movement in the slope. Subsequent inclinometer data suggested movement at a depth of about 42.6 m (140 feet) (Beck, 1996). Figures 3-11 through 3-13 show cable signatures for the three cables. It should be noted that the horizontal resolution on the signatures is low and may not show the small movements that a higher resolution reading might show.

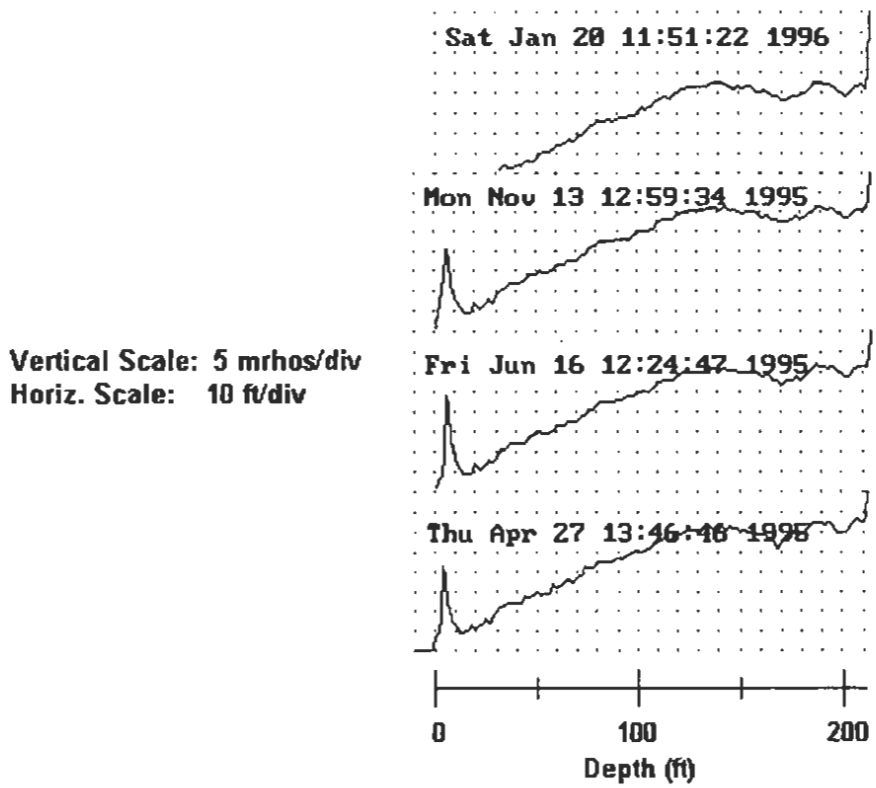

FIG. 3-11. TDR Signatures for Cable #1

---

[1]The remote data acquisition was not used at Grapevine. TDR cable #3 was vandalized in December 1995 and a short circuit, apparently due to a heavy rainstorm, burned the power supply wires from the solar collector to the battery in April. The unit was removed to check for damage and subsequent programming and cellular connections made from the University of the Pacific Geotechnical Laboratory.

Figure 3-11 shows four readings for Cable #1 a fifth reading was not possible since the cable was damaged. The spike at the beginning of the cable is the reflection of the cable connector. The spike at the end of the signature is the end of the cable. Examination of the signatures reveals little change over time.

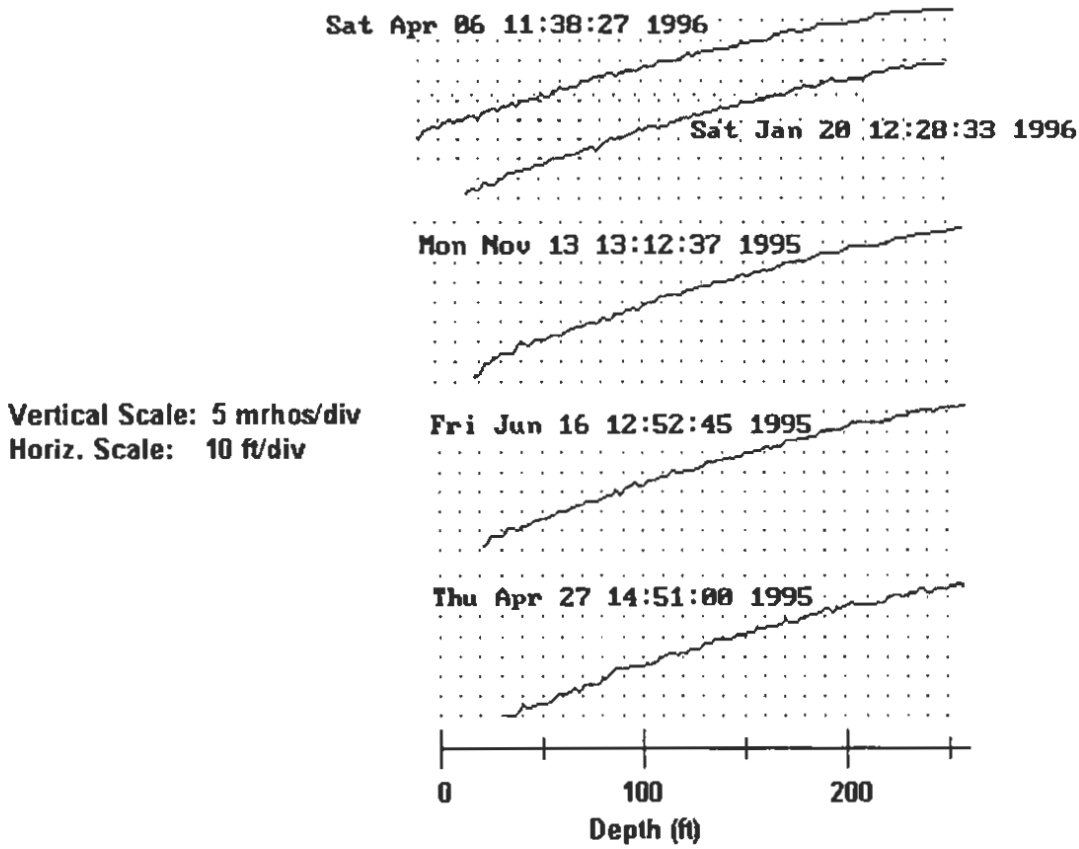

FIG. 3-12. TDR Signatures for Cable #2

Cable #2, Figure 3-12, also indicates little change with time. There was a long length of cable from the connector to the beginning of the hole for this cable, so the signatures have been edited to show most of the length. Cable #3, Figure 3-13, shows no change with time. Again the signatures have been edited and "0" indicates the beginning of the hole (not the beginning of the cable).

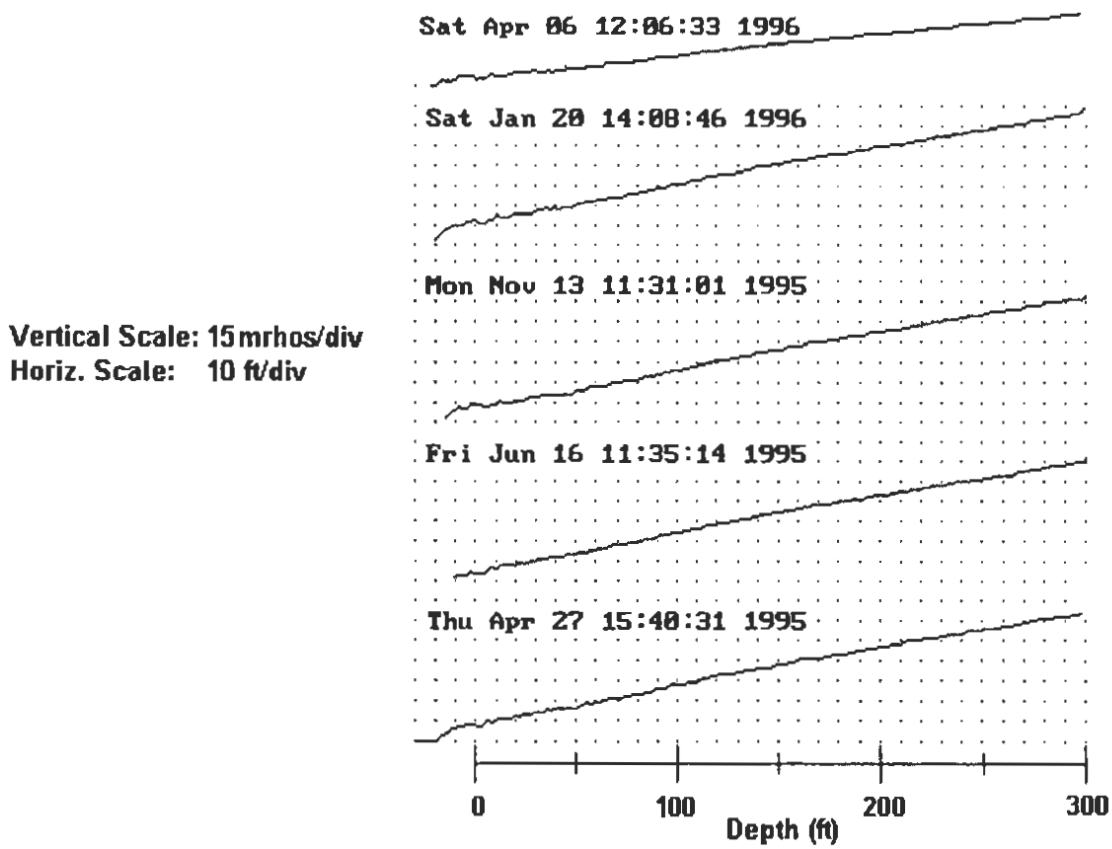

FIG. 3-13. TDR Signatures for Cable #3

The cable signatures do not indicate any significant movement in the slope. Movement would be indicated by a noticeable spike or jump in the cable where it has broken off. This situation may be due to the fact the cables are attached to the outside of the inclinometer casing. It does not mean that the slope is not moving, nor does it mean that the method does not work. To get any shear in the cable the grout surrounding the cable would have to break and shear the cable. It is probable that the casing is deforming and not allowing the cable to shear. Only with significant movement, for example, that experienced at Last Chance Grade (Kane and Beck, 1994), would the cable be damaged.

3.9 References

Beck, T. J. (1996). Personal Communication.

Campbell Scientific, Inc. (1991). "CR10 Measurement and Control Module Operator's Manual." Revised 3/94, Campbell Scientific, Inc., Logan, UT.

Campbell Scientific, Inc. (1995). "PC208 Datalogger Support Software Instruction Manual." Revision: 1/95, Campbell Scientific, Inc., Logan, UT.

Engineering News-Record (1996). 236 (6), 14.

Hamil, G. (1995). "Reflex Software Program Technical Description and User's Guide." Unpublished Report, Canada Centre for Mineral and Energy Technology, 19 p.

Huang, F.-C., O'Connor, K. M., and Yurchak, D. M., and Dowding, C. H. (1993). "NUMOD and NUTSA: Software for Interactive Acquisition and Analysis of Time Domain Reflectometry Measurements." Bureau of Mines Information Circular 9346, 42 p.

Kane, W.F. and Beck, T.J. (1994). "Development of a Time Domain Reflectometry System to Monitor Landslide Activity." *Proceedings*, 45th Highway Geology Symposium, Portland, OR, 163-173.

Samuel, C. (1995). "Grapevine Slide." memorandum to Roadway Geotechnical Branch (North), June 15, 1995, File No. 06-KER-7.0/8.0 NB 06-379904, California Department of Transportation, Office of Structural Foundations.

Tektronix, Inc. (1989). SP232 Serial Extended Function Module Operator/Service Manual, Textronix,l Inc., Redmond OR, 103 p.

Tektronix, Inc. (1994). 1502B Metallic Time Domain Reflectometer Operator Manual, 070-6266-01 Textronix, Inc., Redmond OR.

4. DISCUSSION, CONCLUSIONS, AND RECOMMENDATIONS

4.1 Discussion and Conclusions

A number of tasks were accomplished with corresponding conclusions. The project began in the Spring of 1995 with a simultaneous review of the literature and installation of cable at Grapevine Landslide. Laboratory testing was performed and RG59/U cable properties determined in Summer 1995. Data acquisition equipment was assembled in the laboratory and installed at the Grapevine site in Summer and Fall 1995. Data analysis and computer programming was carried out in Winter and Spring 1996. Two setbacks occurred in Winter and Spring 1996. Cables leading from TDR 1 and TDR 2 to the data acquisition equipment were vandalized by being cut into pieces. Secondly, rainwater, entering through holes in the battery enclosure, evidently shorted the leads between the solar collector and the battery. This severely burned and melted the wires. Since the extent of damage was unknown, the entire unit was removed and transported back to the University of the Pacific Geotechnical Laboratory. The components subsequently checked out, however, programming of the datalogger was done in the laboratory. Therefore, the entire communications system has not been field-checked.

4.1.1 Literature Review

The current literature on TDR was reviewed and a bibliography on the application of TDR in geotechnical engineering was compiled. The number of uses of TDR in geotechnical/structural engineering is growing. The literature survey suggests that geotechnical applications will continue to increase. However, more research is needed on cable properties and cable behavior in a borehole. Identifying the location of shear planes is relatively straightforward, however, determining the amount of movement along them is not.

4.1.2 Equipment Purchase

As part of the research contract, equipment was purchased and assembled to provide Caltrans a TDR monitoring capability. Two cable testers were acquired: one equipped with rechargeable battery and laptop computer interface, and the other equipped to serve with the components of a remote data acquisition system. Data acquisition components included a datalogger which can also be programmed to acquire other types of data such as rainfall amounts, soil moisture, and extensometer readings.

4.1.3 Computer Software

The various computer programs necessary to use TDR were acquired and used. Essential programming and basic instructions on using the programs are included in this report. Methods were developed for obtaining data manually with a laptop computer and remotely with the data acquisition system. In addition, a methodology is provided for post-processing of TDR signatures for incorporation into reports and other documents.

4.1.4 Grapevine Landslide Monitoring

Three cables were installed in boreholes and monitored at Grapevine Landslide. The cables were read manually during site visits. They indicated that no movement was occurring at the site. However, this may be due to the fact that the cables are attached to the inclinometer casings which prevent them from shearing under small deformations.

4.1.5 Remote Monitoring Capabilities

The remote data acquisition equipment was assembled and tested. It was installed at the Grapevine site, but was not used to collect data. Damage to the system from vandalism and weather prevented the system from being used. A cellular phone contract was purchased and communication with the system was made. However, the system was removed for to check for damage before it could be used remotely.

4.1.6 Laboratory Testing

Laboratory testing of the RG59/U cable was performed to determine tensile behavior and corresponding TDR signatures. The strength/deformation characteristics showed that the cable is relatively weak. Its tensile strength is on the order of 623 N (140 lbs). Unjacketed cables were shown to be more sensitive to movement but undergo more strain at failure than jacketed cables. However, the small difference in material characteristics compared with the magnitude of the earth movements in question suggest that the extra effort in stripping the cables does not provide any advantage.

An empirical method for determining the amount of slip along a plane was also proposed. It was suggested that the amount of movement along a slide plane at the time of cable failure is on the order of 25 mm (1 in).

4.2 Recommendations

It is recommended that Caltrans refine its TDR capabilities and methodologies by continuing to use the equipment and comparing results with inclinometer data whenever possible. The following suggestions are made:

1. **Do not use TDR cables attached to inclinometer casing.** Enough data exists to verify the method. TDR cables are more effective and economical if used in place of inclinometers when possible.

2. **Refine the use of the data acquisition equipment and programs.** New products are coming on the market at reduced prices, for example, less expensive cellular phones. Campbell Scientific is developing a component that would replace the cable tester (McHugh, 1996). It would be smaller and much less expensive than the Tektronix product on the market.

   The current programs available for post-processing signatures, NUTSA, etc., are relatively cumbersome. Streamlining the process and investigating other ways to process the signatures, such as using spreadsheets, should be investigated.

3. **Experiment with different types of cable.** Many different types of cable are available. RG59/U is very inexpensive, but some cables may be more applicable particular locations or sensitivities desired.

4. **Extend the technology beyond its current status.** It is possible to link data acquisition equipment through satellite uplinks instead of cellular phones. A State-wide system, monitoring all major landslides, could be implemented and monitored from a single location. Algorithms could be written to trigger early warning devices for motorists.

   TDR appears to be able to respond to groundwater levels. Research to allow the monitoring of groundwater level and slope movement should be considered.

4.3 Reference

McHugh, A. (1996). Personal Communication. Campbell Scientific, Inc.

APPENDIX A

GLOSSARY OF SELECTED TERMS

cable fault: inefficiency in delivering electrical energy by an electrical conductor (cable). Can be caused by crimps, broken cables, water leaking through insulation, or poor splices and connectors.

capacitance: the ability of conductors, separated by a *dielectric*, to store energy between them.

characteristic impedance: the designed *impedance* of a cable.

dielectric: insulation. Does not allow electrical energy to flow away from conductor in a cable and also controls the *velocity of propagation*.

impedance: the sum of the *resistance* (opposition to DC) and *reactance* in an electrical cable. Note that it is expressed in ohms as is simple DC resistance.

incident pulse: the electrical pulse sent out by the cable tester. The pulse and its reflections from the cable make up the waveform shown on the cable tester screen.

inductance: the ability of a conductor to produce an induced voltage when there is a variation in the electrical current passing through it.

millirho: 1/1000 of a *rho*.

noise: electrical energy that interferes with a measurement, generally random. A noise filter averages out the waveforms to approach the real signal, but takes longer to acquire the waveform.

reactance: opposition to the flow of AC energy through a cable. Composed of capacitance and inductance.

reflectometer: instrument that uses reflections from points along a cable to make measurements.

resistance: opposition to the flow of DC energy through a cable.

rho: the reflection coefficient of a cable, that is, the ratio of the voltage applied to a cable divided by the reflected voltage. Almost all the energy is reflected back from the end of the cable (open circuit) so the coefficient is +1. A short circuit means that all energy is returned through the return conductor and the coefficient is -1. If no energy is reflected, the coefficient is 0. Deformations return a coefficient between -1 and 1.

short circuit: place where conductor contacts a return path or ground. Can occur at the end of coaxial cables if inner and outer conductor are allowed to touch.

time domain reflectometry (TDR): sends out pulses of energy and then times the interval until the reflections are received. If the *velocity of propagation* is known, the distance to deformations can be determined.

velocity of propagation: the ratio of the speed of electrical energy in a cable to the speed of electrical energy in a vacuum (the speed of light).

APPENDIX B

BIBLIOGRAPHY OF TIME DOMAIN REFLECTOMETRY APPLICABLE TO GEOTECHNICAL ENGINEERING*

*Aimone-Martin, C. T., and Oravecz, K. I. (1994). "Time Domain Reflectometry Calibration for the Waste Isolation Pilot Project." Preprint No. 94-144, for presentation at the SME Annual Meeting, Albuquerque, NM, 7 p.

*Aimone-Martin, C. T., Oravecz, K. I., and Nytra, T. K. (1994). "TDR Calibration for Quantifying Rock Mass Deformation at the WIPP Site, Carlsbad, NM." *Proceedings*, Symposium on Time Domain Reflectometry in Environmental, Infrastructure, and Mining Applications, Evanston, IL, 507-517.

*Andrews, J. R. (1994). "Time Domain Reflectometry." *Proceedings*, Symposium on Time Domain Reflectometry in Environmental, Infrastructure, and Mining Applications, Evanston, IL, 4-13.

*Anixter (1991). *Wiring Systems Product Catalog*, Anixter Brothers, Skokie, IL.

*Aston, T. (1994). "Installation and Monitoring of Three TDR Cables, Checkerboard Creek Site, Near Revelstoke, B.C.: July 1993 to September 1993." Report No. 93-052 (CL), Submitted to B.C. Hydro by CANMET-MRL, 33 p.

*Aston, T. (1994). "Installation and Monitoring of Three TDR Cables, Checkerboard Creek and Marble Shear Block Sites, Near Revelstoke, B.C.: September 1993 to May 1994." Report No. 94-006 (CL), Submitted to B.C. Hydro by CANMET-MRL, 41 p.

*Aston, T. (1995). "Installation and Monitoring of Three TDR Cables, Checkerboard Creek and Marble Shear Block Sites, Near Revelstoke, B.C.: May 1994 to October 1994." Report No. 94-034 (CL), Submitted to B.C. Hydro by CANMET-MRL, 48 p.

Aston, T., and Charette, F. (1993). "Installation and Monitoring of Three Abandoned Mine Crown Pillar Sites, Timmons, Ontario: August 1992 to October 1992." CANMET Division Report MRL 93-020 (CL), Mining Research Laboratories, Ottawa, 61 p.

---

*Asterisk indicates publication is on file and available from Professor William F. Kane, Department of Civil Engineering, University of the Pacific, Stockton, CA 95211.

*Aston, T., Bétournay, M. C., Hill, J. O., and Charette, F. (1994). "Application for Monitoring the Long Term Behaviour of Canadian Abandoned Metal Mines." *Proceedings*, Symposium and Workshop on Time Domain Reflectometry in Environmental, Infrastructure, and Mining Applications, Northwestern University, U.S. Bureau of Mines Special Publication SP-19-94, 518-527.

Bartel, E. W., Fox, M., Borgoyn, E., and Wingfield, P. (1980) "TDRM Testing." BuMines Contract J0377021, Carnegie-Mellon University, 135 p.

Bartel, E. W., Wingfield, P., and Leister, M. (1981) "TDRM Testing." BuMines Contract J0377021, Carnegie-Mellon University, 17 p.

Bauer, R. A., Dowding, C. H., van Roosendaal, D. J., Mehnert, B. B., and Su, M. B., O'Connor, K. (1991). "Application of Time Domain Reflectometry to Subsidence Monitoring." Final Report submitted to Office of Surface Mining, Pittsburgh, NTIS#PB91-228411, 48 p.

*Beck, T.J. and Kane, W.F. (1994). "Using Time Domain Reflectometry to Monitor Landslide Movement." (abstract), *Proceedings*, Symposium and Workshop on Time Domain Reflectometry in Environmental, Infrastructure, and Mining Applications, Northwestern University, U.S. Bureau of Mines Special Publication SP-19-94, 588.

*Beck, T.J., and Kane, W.F. (1995). "Remote Sensing for Rock Slide Monitoring and Detection." (abstract) *Proceedings*, 1995 Annual Meeting, Association of Engineering Geologists/Groundwater Resources Association of California, Sacramento, CA, p.34.

Breslin, J. J., and Anderson, R. J. (1976). "Current American, British, and West German Underground Coal Mining Practices." Battelle Energy Program Report, Battelle Memorial Institute, Columbus, OH, 77-89.

Brutcher, D. F., Mehnert, B. B., van Roosendaal, D. J., and Bauer, R. A. (1990). "Rock Strength and Overburden Changes Due to Subsidence Over a Longwall Coal Mining Operation in Illinois." *Proceedings*, 31st U.S. Symposium on Rock Mechancis, Golden, CO, 563-570.

Charette, F. (1993). "Results of the Monitoring of Three Abandoned Mine Crown Pillar Sites in Cobalt, Ontario." CANMET Division Report MRL 92-101 (CL), Mining Research Laboratories, Ottawa, 31 p.

Charette, F. (1993). "Installation and Monitoring of Three Abandoned Mine Crown Pillar Sites, Cobalt, Ontario: February 1992 to July 1992." CANMET Division Report MRL 92-095 (CL), Mining Research Laboratories, Ottawa, 64 p.

*Campbell Scientific, Inc. (1987). "SC32A Optically Isolated RS232 Interface Instruction Manual." Revised 1/93, Campbell Scientific, Inc., Logan, UT.

*Campbell Scientific, Inc. (1991). "Time Domain Reflectometry for Measurement of Rock Mass Deformation." Product Brochure, Campbell Scientific, Inc., Logan, UT, 2 p.

*Campbell Scientific, Inc. (1991). "CR10 Measurement and Control Module Operator's Manual." Revised 3/94, Campbell Scientific, Inc., Logan, UT.

*Campbell Scientific, Inc. (1991). "Campbell Scientific TDR Soil Moisture Measurement System Manual." Revised 2/92, Campbell Scientific, Inc., Logan, UT.

*Campbell Scientific, Inc. (1995). "PC208 Datalogger Support Software Instruction Manual." Revision: 1/95, Campbell Scientific, Inc., Logan, UT.

Doepken, W. G. (1991). "Climax Completing $40 Million Modernization of Henderson Mine and Mill." *Mining Engineering*, November 1991, 1315-1316.

Dowding, C. H. (1983). Internal Report. Department of Civil Engineering, Northwestern University, Evanston, IL.

Dowding, C. H. and Huang, F. C. (1994). "Early Detection of Rock Movement with Time Domain Reflectometry." under review, *Journal of Geotechnical Engineering*, American Society of Civil Engineers, 120 (8), 1413-1427.

*Dowding, C. H. and Pierce, C. E. (1994). "Measurement of Localized Failure Planes in Soil with Time Domain Reflectometry." *Proceedings*, Symposium and Workshop on Time Domain Reflectometry in Environmental, Infrastructure, and Mining Applications, Northwestern University, U.S. Bureau of Mines Special Publication SP-19-94, 579-587.

*Dowding, C. H. and Pierce, C. E. (1994). "Monitoring of Bridge Scour and Abutment Movement with Time Domain Reflectometrry." *Proceedings*, Symposium and Workshop on Time Domain Reflectometry in Environmental, Infrastructure, and Mining Applications, Northwestern University, U.S. Bureau of Mines Special Publication SP-19-94, 569-578.

*Dowding, C. H. and Pierce, C. E. (1995). "Time Domain Reflectometry Monitoring of Bridge Integrity and Performance." Unknown Reference. p. 85-90.

*Dowding, C. H., Su, M. B., and O'Connor, K. (1988). "Principles of Time Domain Reflectometry Applied to Measurement of Rock Mass Deformation." *International Journal of Rock Mechanics, Mining Sciences, & Geomechanics Abstracts*, 25 (5), 287-297.

*Dowding, C. H., Su, M. B., and O'Connor, K. (1989). "Measurement of Rock Mass Deformation with Grouted Coaxial Antenna Cables." *Rock Mechanics and Rock Engineering* (22) 1-23.

*Dreher, T. (1969). "Cabling Fast Pulses? Don't Trip on the Steps." *The Electronic Engineer*, 71-75.

Dworak, R. A., Jordan, A. G., and Thorne, J. S. (1977). "Time Domain Reflectometer Microcomputer." Bureau of Mines Contract H0346138, Carnegie-Mellon University, 113 p.

*Francke, J. L., Terrill, L. J., and Francke, C. T. (1994). "Time Domain Reflectometry Study at the Waste Isolation Pilot Plant." *Proceedings*, Symposium on Time Domain Reflectometry in Environmental, Infrastructure, and Mining Applications, Evanston, IL, 555-567.

*Franklin, J. A., and Dusseault, M. B. (1989). *Rock Engineering*. McGraw-Hill Publishing Company, New York.

*Freeman, E. L. (1996). "Time Domain Reflectometry at Cloverdale Landslide, U.S. Highway 101, Sonoma County, California." Technical Research Report CE-96-03, Department of Civil Engineering, University of the Pacific, Stockton, CA, 32 p.

*Gwinnup-Green, M. D. (1996). "Monitoring of Embankment Stability Using Embedded Coaxial Cables." Technical Research Report CE-96-02, Department of Civil Engineering, University of the Pacific, Stockton, CA, 15 p.

*Hamil, G. (1995). "Reflex Software Program Technical Description and User's Guide." Unpublished Report, Canada Centre for Mineral and Energy Technology, 19 p.

Hamilton, J. M., Maller, A. V., and Prins, M. D. (1992). "Subsidence-induced Shear Failures Above Oil and Gas Reservoirs." In J.R. Tillerson and W.R. Wawersik, Ed. *Rock Mechanics. Proceedings of the 33rd U.S. Symposium*. Balkema, Rotterdam, 273-282.

*Haramy, K. Y., and Fejes, A. J. (1992). "Characterization of Overburden Response to Longwall Mining in the Western United States." *Proceedings*, Eleventh International Conference on Ground Control in Mining, The University of Wollongong, N.S.W., 334-344.

*Hasenfus, G. J., Johnson, K. L., and Su, D. W. H. (1988). "A Hydrogeomechanical Study of Overburden Aquifer Response to Longwall Mining." Proceedings, Seventh International Conference on Ground Control in Mining, West Virginia University, Morgantown, 149-162.

*Hayward, M. M., Felderhof, S. C., and Hill, J. D. (1995). "Monitoring of Highwall Stability at the National Gypsum Mine, N.S. Using Time Domain Reflectometry." Final Report, Contract No. 23440-4-0163/01-SQ, Canada Centre for Mineral and Energy Technology, Ottawa, Ontario, 27 p.

Hill, J. D. (1993). "Monitoring of Surface Crown Pillar Deformation at Goldenville, NS. Using Time Domain Reflectometery." Final Report, DSS Contract No. 23440-0-9245/01-S2, Canada Centre for Mineral and Energy Technology, prepared by Department of Mining and Metallurgical Engineering, Technical University of Nova Scotia, Halifax, 94 p.

Huang, F.-C., and Dowding, C. H. (1990). "NUTIME - Northwestern University Time Domain Reflectometry Signature Analysis Program Users' Manual." Report to U.S. Bureau of Mines, Minneapolis, MN.

*Huang, F.-C., and Dowding, C. H. (1991). "NUMOD - Northwestern University Remote Control Time Domain Reflectometry System and Modification of Tektronix SP232 Program Users' Manual." Report to U.S. Bureau of Mines, Minneapolis, MN.

*Huang, F.-C. and Dowding, C. H. "Telemetric and Multiplexer Enhancement of Time Domain Reflectometry Measurements." *Proceedings*, Symposium and Workshop on Time Domain Reflectometry in Environmental, Infrastructure, and Mining Applications, Northwestern University, U.S. Bureau of Mines Special Publication SP-19-94, 34-45.

*Huang, F.-C., O'Connor, K. M., and Yurchak, D. M., and Dowding, C. H. (1993). "NUMOD and NUTSA: Software for Interactive Acquisition and Analysis of Time Domain Reflectometry Measurements." Bureau of Mines Information Circular 9346, 42 p.

*Huston, D. R., Fuhr, P. L., and Ambrose, T. P. (1994). "Damage Detection in Structures Using OTDR and Intensity Measurements." *Proceedings*, Symposium on Time Domain Reflectometry in Environmental, Infrastructure, and Mining Applications, Evanston, IL, 484-493.

*Imran, I., Nazarian, S., and Picornell, M. (1995). "Crack Detection Using Time-Domain Wave Propagation Technique." *Journal of Geotechnical Engineering*, 121, 198-207.

Janes, J. R. (1983). "A Demonstration of Longwall Mining." Final Report, Bureau of Mines Open File Report 86(1)-85 and 86(2)-85, Pittsburgh Research Center, PA.

*Kane, W.F. and Beck, T.J. (1994). "Development of a Time Domain Reflectometry System to Monitor Landslide Activity." *Proceedings*, 45th Highway Geology Symposium, Portland, OR, 163-173.

*Kane, W.F., and Beck, T.J., 1996, "Rapid Slope Monitoring." *Civil Engineering*, American Society of Civil Engineers, New York, p. 56-58.

*Kane, W. F., Perez, H., Anderson, N.O., and Fox, L .K. (1995). "Slope Monitoring Using Electronic Instrumentation." (abstract) *Proceedings*, 1995 Annual Meeting, Association of Engineering Geologists/Groundwater Resources Association of California, Sacramento, CA, p.61.

*Kane, W.F., Beck, T.J., Anderson, N.O., and Perez, H., 1996, "Remote Monitoring of Unstable Slopes Using Time Domain Reflectometry." *Proceedings*, Eleventh Thematic Conference and Workshops on Applied Geologic Remote Sensing, Las Vegas, NV, ERIM, Ann Arbor, MI, p. II-431-II-440.

*Kawamura, N., Bauer, R. A., Mehnert, B. B., and D. J. Van Roosendaal (1994). "TDR Cables, Inclinometers and Extensometers to Monitor Coal Mine Subsidence in Illinois." *Proceedings*, Symposium on Time Domain Reflectometry in Environmental, Infrastructure, and Mining Applications, Evanston, IL, 528-539.

Kim, M. H. (1989). "Quantification of Rock Mass Movement with Grouted Coaxial Cable." M.S. Thesis, Department of Civil Engineering, Northwestern University, Evanston, IL.

*Logan, J. W. (1989). "Calibration of Time Domain Reflectometry Monitoring Cable in Granular Material." Report AFWL-NTE-TN-12-89, Civil Engineering Research Division, Weapons Laboratory, Kirtland AFB, NM, 34 p.

*Look, B. G., and Reeves, I. N. (1992). "The Application of Time Domain Reflectometry in Geotechnical Instrumentation." *Geotechnical Testing Journal*, 15 (3), 277-283.

*Lord, E., Peterson, D., Thompson, G., and Stevens, T. (1991). "New Technologies for Monitoring Highwall Movement at Syncrude Canada Ltd." Preprint CIM/AOSTRA 91-97, paper presented at CIM/AOSTRA 1992 Technical Conference, Banff, April 21-24, 97-1 to 97-8.

*O'Connor, K. M. (1989). "Monitoring of Rock Mass Response to Solution Mining." Final Report, State Mining and Mineral Resources Institute, Grant No. 9C-BD-03-9-0000, New Mexico Tech, Socorro, NM, 26 p.

Moffitt, L. R. (1964). "Time Domain Reflectometry: Theory and Applications." *Engineering Design News*, November, 38-44.

*O'Connor, K. M. (1991). "Development of System for Highwall Monitoring Using Time Domain Reflectometry." Summary Report, U.S. Bureau of Mines Twin Cities Research Center, Minneapolis, MN, 75 p.

O'Connor, K. M. (1991). "Overburden Response to Longwall Mining, Franklin County, Illinois." Autoflix animation, 374 Kbyte file, available on request, Bureau of Mines, Minneapolis, MN.

O'Connor, K. M. (1992). "Overburden Response to Longwall Mining, Emery County, Utah." Autoflix animation, 370 Kbyte file, available on request, Bureau of Mines, Minneapolis, MN

*O'Connor, K. M. (1992). "Development of a Highwall Monitoring System Using Time Domain Reflectometry." *Proceedings*, 95th National Western Mining Conference, Denver, CO, 3 p.

O'Connor, K. M., and Dowding, C. H. (1991). "Remote Monitoring of Rock Mass Deformation Using Time Domain Reflectometry." Proceedings, 3rd International Symposium on Field Measurements, Oslo, Norway, 295-306.

O'Connor, K. M., and Dowding, C. H. (1994). "Application of Time Domain Reflectometry to Mining." Proceedings, 25th Symposium on Rock Mechanics, Northwestern University, Evanston, IL, 737-746.

*O'Connor, K. M., and Wade, L. V. (1994). "Applications of Time Domain Reflectometry in the Mining Industry." *Proceedings*, Symposium on Time Domain Reflectometry in Environmental, Infrastructure, and Mining Applications, Evanston, IL, 494-506.

O'Connor, K. M., and Zimmerly, T. (1991). "Application of Time Domain Reflectometry to Ground Control." *Proceedings*, 10th International Conference on Ground Control in Mining, Morgantown, WV, 115-121.

*O'Connor, K., Dowding, C. H., and Su, M.-B. (1987). "Quantification of Rock Caving Within Sinkholes by Time Domain Reflectometry." *Proceedings*, Second Multidisciplinary Conference on Sinkholes and the Environmental Impacts of Karst, Orlando, FL, 157-160.

O'Connor, K. M., O'Rourke, J. E., and Carr, J. (1983). "Influence of Rock Discontinuities on Coal Mine Subsidence." Bureau of Mines Contract J0100087, Woodward-Clyde Consultants, 129 p.

*O'Connor, K. M., Peterson, D. E., and Lord, E. R. (1992). "Development of a Highwall Monitoring System Using Time Domain Reflectometry." *Proceedings*, Ninety-fifth National Western Mining Conference, Denver, CO, 3p.

O'Connor, K. M., Peterson, D. E., and Lord, E. R. (1995). "Development of a Highwall Monitoring System using Time Domain Reflectometry." *Proceedings*, 35th U.S. Sym. Rock Mech. Reno, Nevada, June, pp. 79-84.

O'Rourke, J. E., Rey, P. H., and O'Connor, K. M. (1982). "Characterization of Subsidence over Longwall Panels." Final Report, Contract No. DE-AC22-80PC30117, prepared for the U.S. Dept. of Energy, Pittsburgh, PA, 180 p.

Panek, L. A. and Tesch, W. J. (1981). "Monitoring Ground Movements Near Caving Stopes -- Methods and Measurements." U.S. Bureau of Mines Report of Investigations 8585, Denver, 109 p.

Peterson, D. (1993). "Evaluation of Coaxial Cable/MTDR Method for Quantifying Highwall Movement." Syncrude Canada Ltd., Research Report 93-4, Edmonton, Alberta, 411 p.

Pierce, C. E. (1995). "TDR Cable Installation During Seismic Retrofitting of Bridge Piers in East St. Louis, Illinois." Internal Report, Department of Civil Engineering, Northwestern University, 6 pp.

Pierce, C. E. and Dowding, C. H. (1995). "Long-term Monitoring of Bridge Pier Integrity with Time Domain Refletometry Cables." Proceedings of Conference and Exposition of Sensors and Systems, *Sensors Magazine*, 399-406.

*Pierce, C. E., Bilaine, C., Huang, F.-C., and Dowding, C. H. (1994). "Effects of Multiple Crimps and Cable Length on Reflection Signatures From Long Cables." *Proceedings*, Symposium on Time Domain Reflectometry in Environmental, Infrastructure, and Mining Applications, Evanston, IL, 540-554.

Pulse, R. R. (1970). "Results of the Subsidence Study at Old Ben No. 21; (OCT 68-JULY 70) Settlement Probe, BPC & TDR Monitoring Methods." Internal Report, U.S. Bureau of Mines, Denver, CO, 4 p.

Rohrig, J. (1931). "Location of Faulty Places by Measuring with Cathode Ray Oscillographs." *Elektrotech Z.*, 8.

*Schoenwald, J. S. and Beckham, P. M. (date unknown). "Distributed Fiber-Optic Sensor for Passive and Active Stabilization of Large Structures." Reference Unknown, 565-558.

Siekmeier, J. A., O'Connor, K. M., and Powell, L. R. (1992). "Rock Mass Classification Applied to Subsidence Over High Extraction Coal Mines." *Proceedings*, Third Subsidence Workshop Due to Underground Mining, Morgantown, WV, 317-325.

*Sisemore, C. J. and Stefani, R. E. (1971). "Rock Fracture Measurements: A New Use for Time Domain Reflectometry." *Journal of Applied Physics*, 42 (7), 2701-2710.

*Steiner, J. P., and Weeks, W. L. (1990). "Time-Domain Reflectometry for Monitoring Cable Changes. Feasibility Study." Project RP2308-18, Electric Power Research Institute, Palo Alto, CA, 59 p.

*Su, M.-B. (1987). "Quantification of Cable Deformation with Time Domain Reflectometry Techniques." Ph.D. Dissertation, Northwestern University, Evanston, IL, 112 p.

Su, W. H., and Hasenfus, G. J. (1987). "Field Measurements of Overburden and Chain Pillar Response to Longwall Mining." *Proceedings*, Sixth International Conference on Ground Control in Mining, Morgantown, WV, 296-311.

*Tektronix, Inc. (1989). SP232 Serial Extended Function Module Operator/Service Manual, Textronix, Inc., Redmond OR, 103 p.

*Tektronix, Inc. (1994). 1502B Metallic Time Domain Reflectometer Operator Manual, 070-6266-01 Textronix, Inc., Redmond OR.

*Thomas, R. J. (1968). "Choosing Coaxial Cable for Fast Pulse Response." *Microwaves*, November, 1968, 56-65.

Topp, G. C., and Davis, J. L. (1985). "Measurement of Soil Water Content Using Time Domain Reflectometry (TDR): a Field Application." Journal of Soil Science Society of America, 49, 19-24.

*U.S. Bureau of Mines (1995). "Early Detection and Technical Animation of Rock Movements Using Time Domain Reflectometry." *Technology News*, No. 449, April 1995, 2 p.

Van Roosendaal, D. J., Brutcher, D. F., Mehnert, B. B., Kelleher, J. T., and Bauer, R. A. (1990). "Overburden Deformation and Hydrologic Changes Due to Longwall Mine Subsidence in Illinois." *Proceedings*, Third Conference on Ground Control Problems in the Illinois Coal Basin, Carbondale, IL, 73-82.

Van Roosendaal, D. F., Mehnert, and Bauer, R. A. (1992). "Three-Dimensional Ground Movements During Dynamic Subsidence of a Longwall Mine in Illinois." *Proceedings*, Third Workshop on Surface Subsidence Due to Underground Mining, Morgantown, WV.

Wade, L. V., and Conroy, P. J. (1980). "Rock Mechanics Study of a Longwall Panel." *Mining Engineering*, 1728-1734.

*Zimmerman, B. D., Murphy, K. A., and Claus, R. O. (date unknown). "Local Strain Measurements Using Optical Fiber Splices and Time Domain Reflectometry." Reference Unknown, 553-558.

APPENDIX C

VENDORS OF EQUIPMENT FOR TDR MEASUREMENTS
(as of August 15, 1995)

Compiled by Kevin O'Connor, U.S. Bureau of Mines

Biddle Instruments
AVO International
510 Township Line Road
Blue Bell, PA 19422-2795
contact:
Leonard Holets
(215) 469-1077
(215) 643-2670 FAX

Campbell Scientific, Inc.
815 W. 1880 N.
Logan, UT 84321-1784
contact:
Jim Bilskie
(801) 753-2342
(801) 752-3268 FAX

Easy Test, Ltd
Solarza 8b
P. O. Box 24
20-815 Lublin 56
POLAND
contact:
Marnik Malicki
(81) 450 61
(81) 450 67 FAX

ECAD Division of Pentek, Inc
CM Technologies Corporation
1026 Fourth Avenue
Coraopolis, PA 15108
contact:
Julie Ransom
(412) 262-0734
(412) 262-2250 FAX

EG&G
2450 Alamo Avenue SE
Albuquerque, NM 87106
contact:
xxxxxxxx
(505) 243-2233
(505) 243-1021 FAX

Environmental Sensors Division
G.S. Gabel Corp
100 - 4243 Glanford Avenue
Victoria, B.C. V8Z 4B9
contact:
Dave Adams (Canadian Inquiries)
(604) 479-6588
(604) 479-1412 FAX
Email: GABEL@ISLANDNET.COM

Environmental Sensors, Inc.
13240 Evening Creek Drive S.
Suite 316
San Diego, CA 92128
contact:
John Johnston (USA & International Inquiries)
(619) 486-5688
(619) 486-1899
Email: johnstonsd@aol.com

Hewlett Packard
3495 Deer Creek Road
Palo Alto, CA 94303
contact:
(415) 857-1501

HYPERLABS
13830 S.W. Rawhide Ct.
Beaverton, OR 97008
contact:
Agostan Agostan
(503) 524-7771
(503) 524-6372 FAX

IMKO GmBH
Im Stoeck 11
D-76275 Ettlingen
contact:
Robin Fundinger
(49) 7243-592110
(49) 7243-90856 FAX

Picosecond Pulse Labs, Inc.
P.O. Box 44
Boulder, CO 80306
contact:
James R. Andrews
(303) 443-1249
(303) 447-2236 FAX

Signetel, Inc.
P. O. Box 6419
Bend, OR 97708-6419
contact:
Thomas W. Durston
(503) 382-0473
(503) 382-0473 FAX
(503) 385-6477 VOICE MAIL
Email: Tom_Durston@ortel.org

Soilmoisture Equipment Corp.
P.O. Box 30025
Santa Barbara, CA 93105
contact:
Whitney Skaling
(805) 964-3535
(805) 683-2189 FAX

VENDORS OF EQUIPMENT FOR TDR MEASUREMENTS Tektronix, Inc.
625 SE Salmon Ave
P.O. Box 1197
Redmond, OR 97756-0227
contact:
Curtis Smith
(503) 923-4434
(503) 295-1537 FAX

Troxler Electronic Laboratories, Inc.
3008 Cornwallis Road
P.O. Box 12057
Research Triangle Park, NC 27709
contact:
Ron W. Phillips
(919) 549-8661
(919) 549-0761 FAX

University of Amsterdam
Laboratory of Physical Geography and Soil Science
Nieuwe Prinsengracht 130
Amsterdam 1081 VZ
THE NETHERLANDS
contact:
Timo J. Heimovaara
(31) 20 525 7451 phone or FAX

Vadose Zone Equipment Company
1325 Parr St.
Amarillo, TX 79106
contact:
Priscilla Sheets
(806) 352-3088 phone or FAX

APPENDIX D

WIRING DIAGRAMS FOR DATA ACQUISITION EQUIPMENT

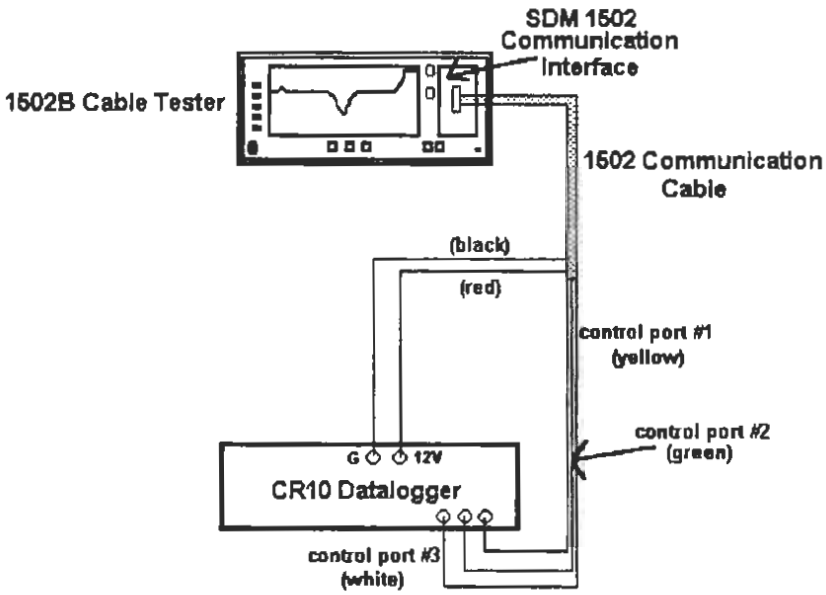

FIG. D-1. SDM 1502 and CR10 Wiring Diagram

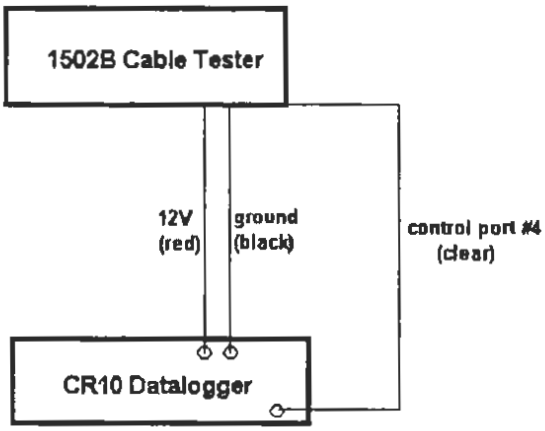

FIG. D-2 Cable Tester Power From CR10

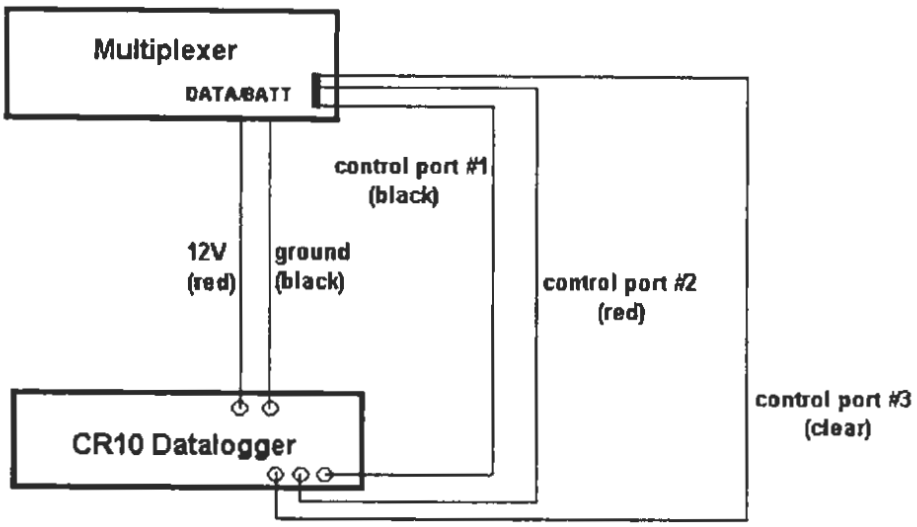

FIG. D-3 Multiplexer/Datalogger Wiring

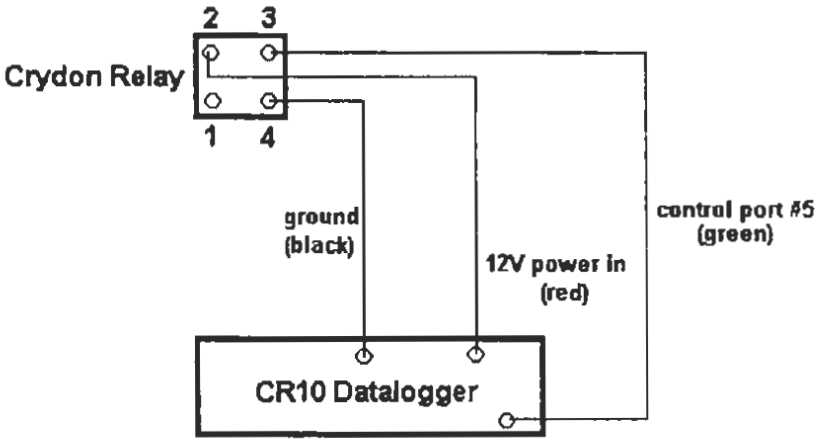

FIG. D-4 Datalogger/Relay Wiring

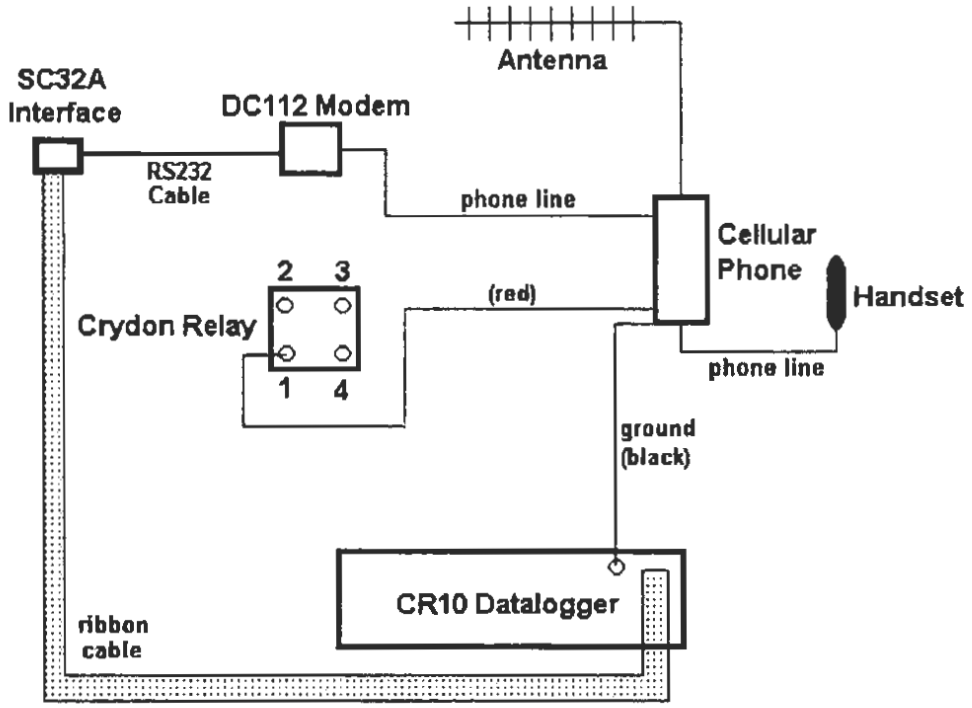

FIG. D-5 Cellular Phone System Wiring

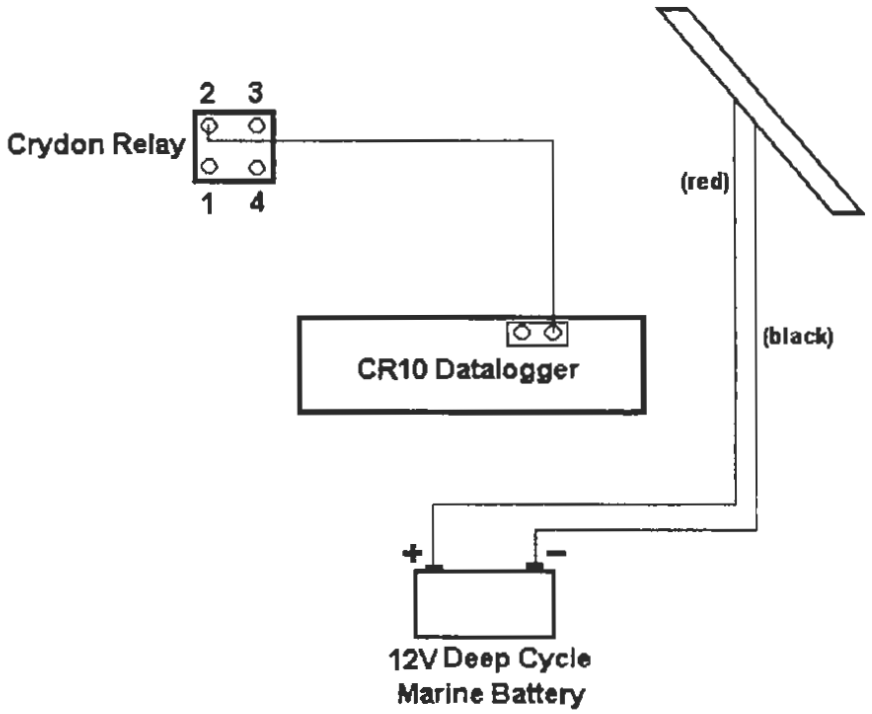

FIG. D-6 Power Supply Wiring

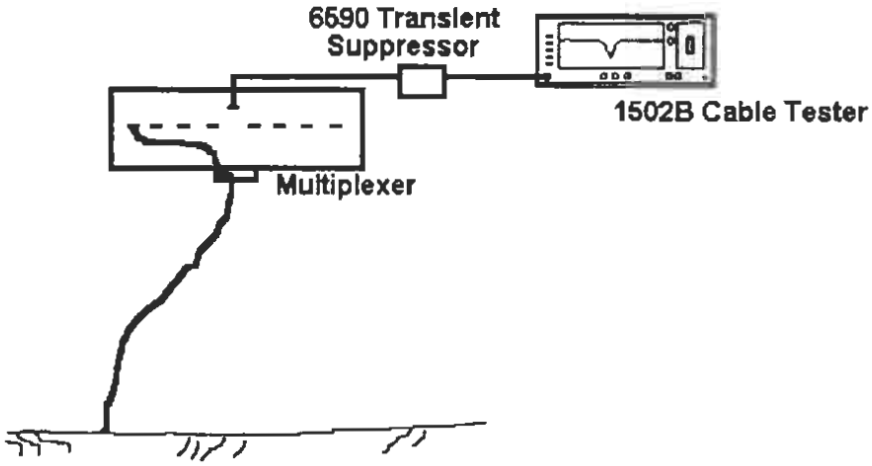

FIG. D-7 TDR Coaxial Cable Wiring