DIVISION OF STRUCTURES AND ENGINEERING SERVICES

TRANSPORTATION LABORATORY

RESEARCH REPORT

VEHICULAR CRASH TEST OF A CONTINUOUS CONCRETE MEDIAN BARRIER WITHOUT A FOOTING

FINAL REPORT

FHWA-CA-TL-6883-77-22

AUG. 1977

77-22

InterScan International Scanning Systems

Batch Tracking

Initials

Date

Prepared in Coo

ortation,

Caltrans

CALIFORNIA DEPARTMENT OF TRANSPORTATION

ClibPDF - www.fastio.com

ClibPDF - www.fastio.com

TECHNICAL REPORT STANDARD TITLE PAGE

1. REPORT NO	2. GOVERNMENT ACCESSION NO	3. RECIPIENT'S CATALOG NO
FHWA-CA-TL-6883-77-22		

4. TITLE AND SUBTITLE	5. REPORT DATE
VEHICULAR CRASH TEST OF A CONTINUOUS CONCRETE MEDIAN BARRIER WITHOUT A FOOTING	August 1977
	6. PERFORMING ORGANIZATION CODE
7. AUTHOR(S)	8. PERFORMING ORGANIZATION REPORT NO
D. M. Parks, R. L. Stoughton, J. R. Stoker, and E. F. Nordlin	19601-636883
9. PERFORMING ORGANIZATION NAME AND ADDRESS	10. WORK UNIT NO
Office of Transportation Laboratory California Department of Transportation Sacramento, California 95819	11. CONTRACT OR GRANT NO D-4-151
12. SPONSORING AGENCY NAME AND ADDRESS	13. TYPE OF REPORT & PERIOD COVERED
California Department of Transportation Sacramento, California 95807	Final Report
	14. SPONSORING AGENCY CODE

15. SUPPLEMENTARY NOTES

This study was conducted in cooperation with the U. S. Department of Transportation, Federal Highway Administration.

16. ABSTRACT

A vehicular impact test, 4700 lb (2130 kg) vehicle/61 mph (27 m/s)/ 26 degrees (0.46 rad), was conducted on a continuous New Jersey concrete median barrier (CMB) without a footing cast on an asphalt concrete surface. The test barrier contained two continuous longitudinal No. 4 (12.7 mm) steel reinforcing bars one at 6 inches (152 mm) and the other at 12 inches (305 mm) down from the top of the barrier. There were no contraction or construction joints in the barrier. The barrier was allowed to crack randomly.

The barrier suffered no structural damage and did not move laterally or rotate about its longitudinal axis during the impact. After being redirected by the barrier, the vehicle rolled over.

Based on this test, the CMB designs used in California have been changed. The 10 inch (254 mm) deep concrete footing has been eliminated from both the Type 50 standard 32 inch (813 mm) high New Jersey barrier design and the Type 50C New Jersey CMB design. The Type 50C design is used for superelevated transitions and at other locations where the offset in elevation between opposing roadways varies up to 3 feet (914 mm). Three longitudinal No. 4 (12.7 mm) steel reinforcing bars have been added to the Type 50 and 50C CMB designs.

17. KEY WORDS	18. DISTRIBUTION STATEMENT
Impact tests, median barriers, reinforced concrete, shrinkage cracks vehicle dynamics	No restrictions. This document is available to the public through the National Technical Information Service, Springfield, VA 22161

19. SECURITY CLASSIF. (OF THIS REPORT)	20. SECURITY CLASSIF. (OF THIS PAGE)	21. NO. OF PAGES	22. PRICE
Unclassified	Unclassified	43	

DS-TL-1242 (Rev.6/76)

ClibPDF - www.fastio.com

ClibPDF - www.fastio.com

STATE OF CALIFORNIA
DEPARTMENT OF TRANSPORTATION
DIVISION OF STRUCTURES & ENGINEERING SERVICES
OFFICE OF TRANSPORTATION LABORATORY

August 1977

TL No. 636883
Item No. D-4-151

Mr. C. E. Forbes
Chief Engineer

Dear Sir:

I have approved and now submit for your information this final research project report titled:

VEHICULAR CRASH TEST OF A CONTINUOUS
CONCRETE MEDIAN BARRIER WITHOUT A FOOTING

Study made by ..... Structural Materials Branch

Under the Supervision of ..... E. F. Nordlin, P. E.

Principal Investigator ..... J. R. Stoker, P. E.

Co-Principal Investigator ..... R. L. Stoughton, P. E.

Co-Investigator ..... D. M. Parks, P. E.

Report Prepared by ..... D. M. Parks, P. E.

Very truly yours,

George A. Hill

GEORGE A. HILL
Chief, Office of Transportation Laboratory

DMP:bjs
Attachment

ClibPDF - www.fastio.com

ClibPDF - www.fastio.com

ACKNOWLEDGEMENTS

This work was accomplished in cooperation with the United States Department of Transportation, Federal Highway Administration, Work Program HPR-1(13), Part 2 Research as Item D-4-151.

The contents of this report reflect the views of the Transportation Laboratory which is responsible for the facts and the accuracy of the data presented herein. The contents of this report do not necessarily reflect the official views or policies of the State of California or the Federal Highway Administration. This report does not constitute a standard, specification, or regulation. It should also be recognized that the opinions, findings, and conclusions expressed in this publication are not necessarily those of the Federal Highway Administration.

Special appreciation is due the following staff members of the Transportation Laboratory who were instrumental in the successful completion of the test, construction of the test barrier, and in the preparation of this report:

Lee Staus	In charge of preparation and operation of the test vehicle and other test equipment; helped conduct the test and assisted with barrier construction.
Jim Keesling	In charge of photo and electronic instrumentation data reduction; prepared the movie report; helped conduct the test; and assisted with barrier construction.
John P. Dusel Jr. Duane H. Anderson Enrico Maggenti	Assisted with barrier construction
Robert Mortensen	Data and documentary photography.

ClibPDF - www.fastio.com

Richard Johnson Delmar Gans	Electronic instrumentation of the test vehicle and barrier.
Elmer Wigginton	Drafting of tables, figures, and instrumentation data traces.
Larry Stevens	Reproduction.

Appreciation is also due the following personnel from the California Department of Transportation who were available for technical consultation and advice during the project:

Edward J. Tye	Office of Traffic
Ralph W. Bishop	Office of Structures Planning
John Evans	Value Engineering Branch

In addition the judgements of Maurice Bronstad, Southwest Research Institute on a revised standard barrier design are gratefully acknowledged.

ClibPDF - www.fastio.com

TABLE OF CONTENTS

	Page
ACKNOWLEDGEMENTS	i
INTRODUCTION	1
CONCLUSIONS AND RECOMMENDATIONS	5
IMPLEMENTATION	9
TECHNICAL DISCUSSION	12
Test Facility and Equipment	12
Barrier Design and Construction	12
Test Results	14
Impact Description	14
Barrier Performance and Damage	15
Vehicle Damage	16
Discussion of Results	19
Structural Adequacy	19
Impact Severity	25
Vehicle Trajectory Hazard	26
REFERENCES	28
APPENDIX	30
Test Vehicle Equipment and Guidance System	31
Photo-Instrumentation	35
Electronic Instrumentation and Data	36

ClibPDF - www.fastio.com

ClibPDF - www.fastio.com

INTRODUCTION

Between 1971 and 1976 about 300 miles (483 km) of New Jersey shape concrete median barrier (CMB) was built on California highways. Virtually none of this type of barrier existed before that time in California. The New Jersey shape CMB design has been enthusiastically promoted during this short time because of its good impact performance, its low maintenance costs, its low first cost and its relatively pleasing appearance.

This project was initiated in January 1976 after a report(1)* by the Value Engineering Branch of the California Department of Transportation (Caltrans) indicated that the CMB (California Type 50 and Type 50C) might still be functional without its continuous concrete footing.

A cost savings of $3.80 per lineal foot was estimated for the standard 32 inch (813 mm) high CMB (Type 50) without a footing. This barrier is commonly used in flat narrow medians.

A cost savings of $4.35 per lineal foot was anticipated for the Type 50C CMB design without a footing This design is used exclusively where offsets in elevation occur between opposing roadways. The cost estimate was based on an average differential height of 10 inches (254 mm) which makes the overall height of the barrier 42 inches (1.1 m). The maximum offset allowed in California for Type 50C CMB is 36 inches (914 mm).

---

*Numbers underlined in parentheses refer to a reference list at the end of this report.

ClibPDF - www.fastio.com

In the 1976-77 fiscal year about 112 miles (180 km) of CMB (all types) were scheduled for construction in California. In recent years, the ratio of Type 50 and Type 50C CMB (both cast-in-place and slipformed) to all other types of CMB were 58% and 35% respectively. Using these ratios and the cost savings per lineal foot for these designs, a total possible cost savings of about $2,200,000 could have resulted by eliminating the concrete footings. In addition, construction time could be reduced if the footings were eliminated. It is expected that similar levels of new CMB construction will continue in the next few years.

The cost savings above are based on the elimination of the footings with no other conditions changed. Provisions for an adequate bearing surface (pavement or compacted base) needed for the barrier in some locations could reduce the projected cost savings.

The purpose of this project was to test the structural strength and stability of continuous CMB without a footing. Since 1967 Caltrans has previously evaluated three New Jersey shape CMB designs with different foundation anchorage systems for structural adequacy by conducting crash tests, Figure 1. Other agencies (2,3,4,5) have qualified similar CMB designs.

In addition Caltrans has conducted full scale impact tests(6) on freestanding precast segments of New Jersey shape CMB, 12.5 ft and 20 ft (3.8 and 6.1 m) long, with pinned end connections. These barrier segments when impacted at impact speeds/angles of about 65 mph (29 m/s)/25 degree (0.44 rad) moved laterally and rotated excessively causing vehicle vaulting and other undesirable vehicle behavior.

It was concluded that CMB cast-in-place or slipformed continuously without a footing might fall somewhere between

ClibPDF - www.fastio.com

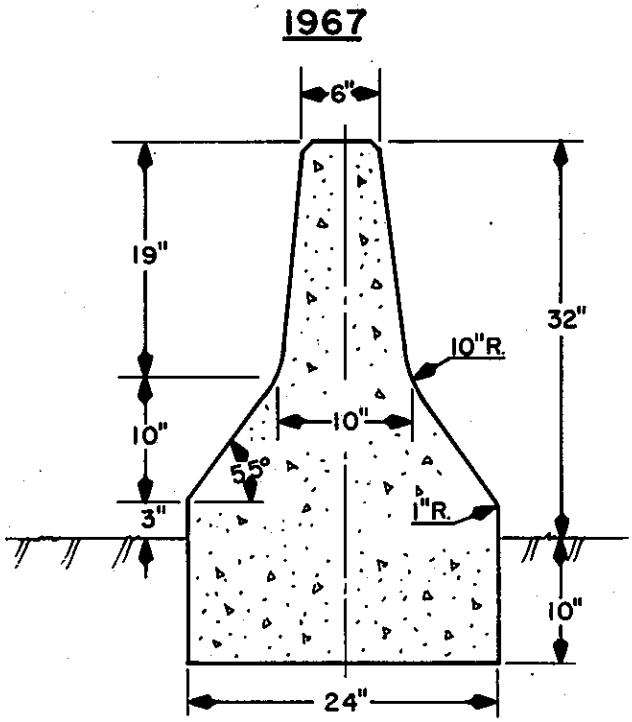

CONCRETE BARRIER
TYPE 50

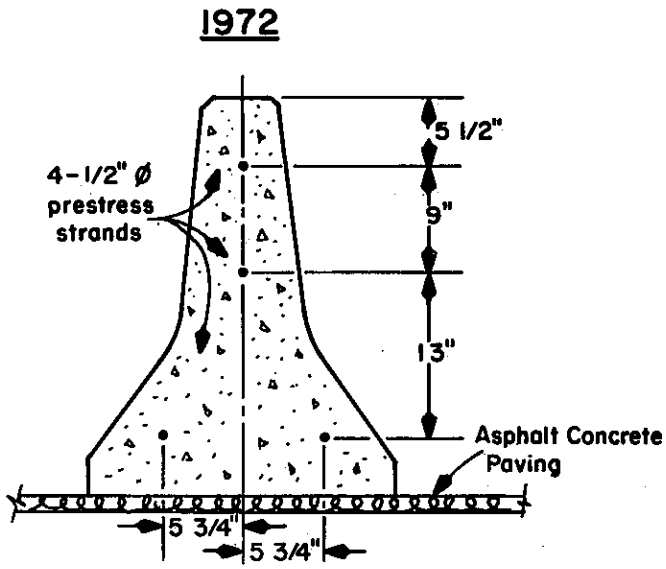

PRESTRESSED CONCRETE
BARRIER
TYPE 50

NOTE:
All three designs have the same above ground concrete dimensions.

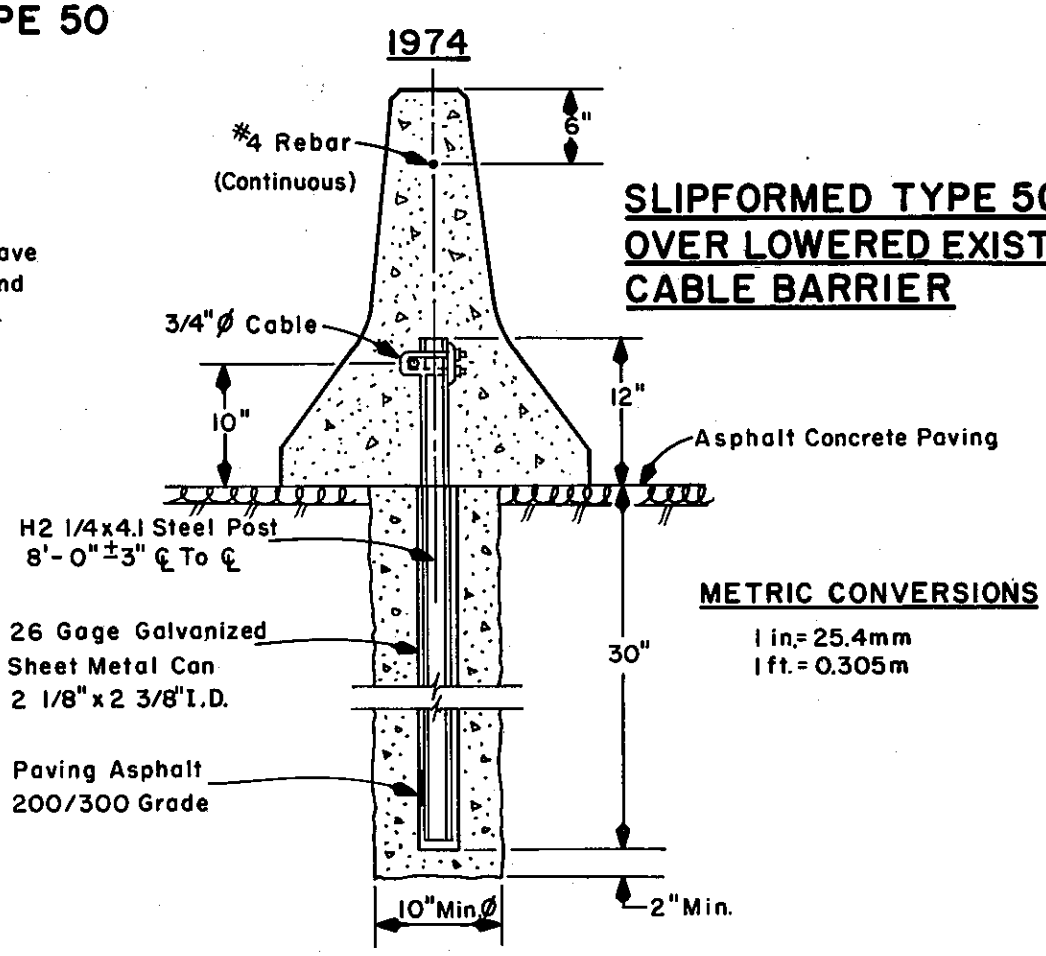

SLIPFORMED TYPE 50
OVER LOWERED EXISTING
CABLE BARRIER

METRIC CONVERSIONS
1 in.=25.4mm
1 ft.=0.305m

Figure 1, TYPICAL SECTIONS OF NEW JERSEY SHAPE CMB TESTED BY CALTRANS

ClibPDF - www.fastio.com

the strength and stability range of barriers with footings and the freestanding precast CMB designs which were unacceptable for severe impact conditions. Therefore, a crash test of a New Jersey shape CMB without a footing was warranted.

This report describes the results of a vehicular impact, 4700 lb (2130 kg) vehicle/61 mph (27 m/s)/26 degrees (0.46 rad), into the CMB without a footing as shown below:

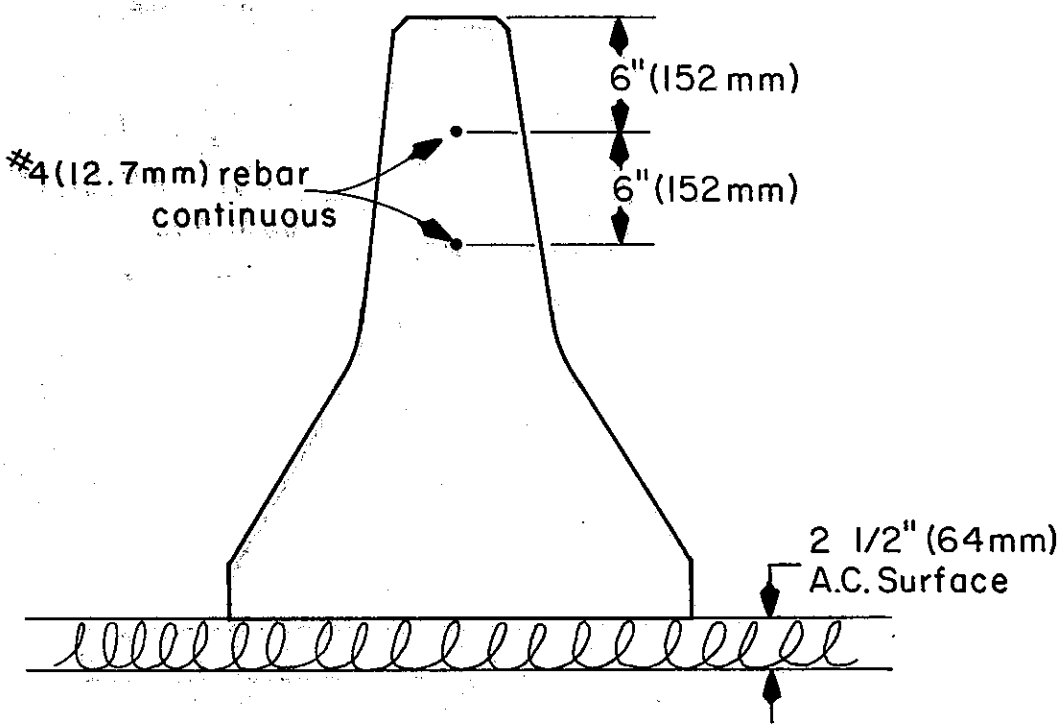

A second impact test of a CMB design (Type 50C) used in saw-tooth medians without a footing was also scheduled for this project. However, this test was not conducted due to the favorable strength and stability results from the first test.

This report also summarizes and discusses other large angle passenger vehicle tests and all heavy vehicle impact tests conducted on other permanent CMB designs.

ClibPDF - www.fastio.com

CONCLUSIONS AND RECOMMENDATIONS

Conclusions

The following conclusions were based on the results of a 4700 lb (2130 kg) vehicle/61 mph (27 m/s)/26 degree (0.46 rad) impact test, Test 321, of a lightly reinforced continuous New Jersey shape concrete median barrier (CMB) cast without a concrete footing on an asphalt concrete surface:

- The structural strength and stability of the barrier were not affected by eliminating the 10 inch (254 mm) deep concrete footing specified for use with cast-in-place or slipformed New Jersey shape CMB (Type 50) in the 1975 California Standard Plans. The test barrier did not move laterally or rotate about its longitudinal axis during impact.

- The test barrier suffered no structural damage even though the point of impact occurred at one of five shrinkage cracks which were allowed to form randomly during construction. There were no construction or contraction joints in the test barrier.

- During this severe impact test, the test vehicle rolled over after it was redirected by the CMB. The rollover was caused primarily by excessive rolling and yawing motions of the vehicle and was not related to the fact the barrier had no footing.

- The uncontrolled postcrash rollover trajectory of the test vehicle, if occurring on a highway, would be hazardous to adjacent traffic and might cause a secondary accident.

ClibPDF - www.fastio.com

- Based on the favorable strength and stability results of Test 321 the second impact test planned for this project on a similar design, the California Type 50C CMB for "sawtooth" medians, was not conducted. It was concluded that lateral barrier movement and rotation were unlikely to occur with this sawtooth CMB design due to its mass per lineal foot which would have been up to three times greater than the mass of the barrier used in Test 321.

Recommendations

The following recommendations are based on the results of Test 321 described in this report, and on a review of other large angle passenger vehicle and heavy vehicle tests summarized in Table 1 of the Discussion of Results section of the report:

- The 24 inch (610 mm) wide by 10 inch (254 mm) deep continuous concrete footing shown in the California 1975 Standard Plans should be eliminated from all types of CMB except at the ends of the barrier. The last 10 ft (3.1 m) of the CMB should retain that footing and the barrier should be reinforced at these locations.

- The California Type 50 and 50C CMB should include four continuous longitudinal No. 4 (12.7 mm) steel reinforcing bars (Grade 60) as shown below to prevent any loss in reserve lateral strength resulting from removal of the concrete footing. The reinforcing bars at the top of the barrier are needed to help contain chunks of concrete from falling into opposing traffic lanes during a punchout failure when the barrier is hit at a large angle. The bars at the bottom of the barrier should help minimize lateral barrier movement.

ClibPDF - www.fastio.com

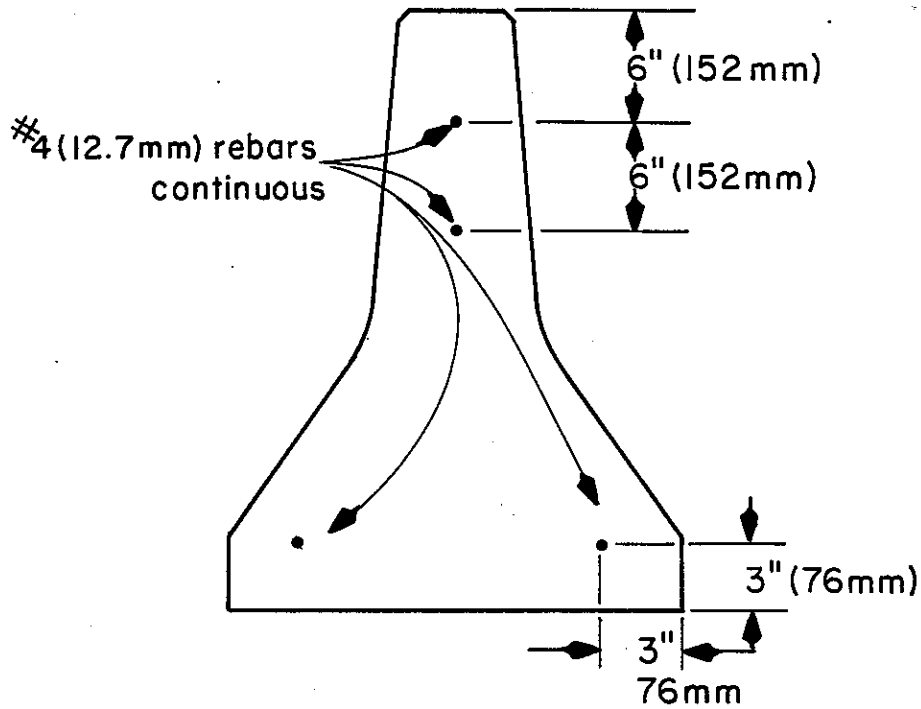

- The New Jersey CMB without a footing should be cast directly on top of asphalt concrete, portland cement concrete, or a well compacted aggregate base.

- There may be situations or site conditions where additional restraint against lateral translation may be required or warranted. For such non-standard conditions the use of a footing, an abutting asphalt concrete overlay, dowels, or other alternate designs may be required. Caltrans Headquarters should be consulted for the use of special details which deviate from the "Standard" design.

- The use of a 10 inch (254 mm) by 24 inch (610 mm) footing could be considered as a viable Contractor alternative to the placement of a prepared base as required in the third recommendation above. For such an alternate the lower two No. 4 (12.7 mm) steel reinforcing bars would not be

ClibPDF - www.fastio.com

required. This design may be necessary for unique roadway conditions.

- The placement of the Type 50 CMB over an existing lowered cable barrier in accordance with Caltrans special details could also be considered as a viable Contractor alternative in which case the lower two No. 4 (12.7 mm) steel reinforcing bars would not be required.

ClibPDF - www.fastio.com

IMPLEMENTATION

Special details A75-A.5 and A75-B.4 of the 1977 California Standard Plans, Figures 2 and 3, show the implementation of the recommendations of this research report. The 10 inch (254 mm) deep concrete footings have been removed from Concrete Barrier Type 50 and Type 50C and the extra longitudinal reinforcing bars have been added to these designs. Also, details have been added to anchor the last 10 ft (3.1 m) of the CMB with a concrete footing.

ClibPDF - www.fastio.com

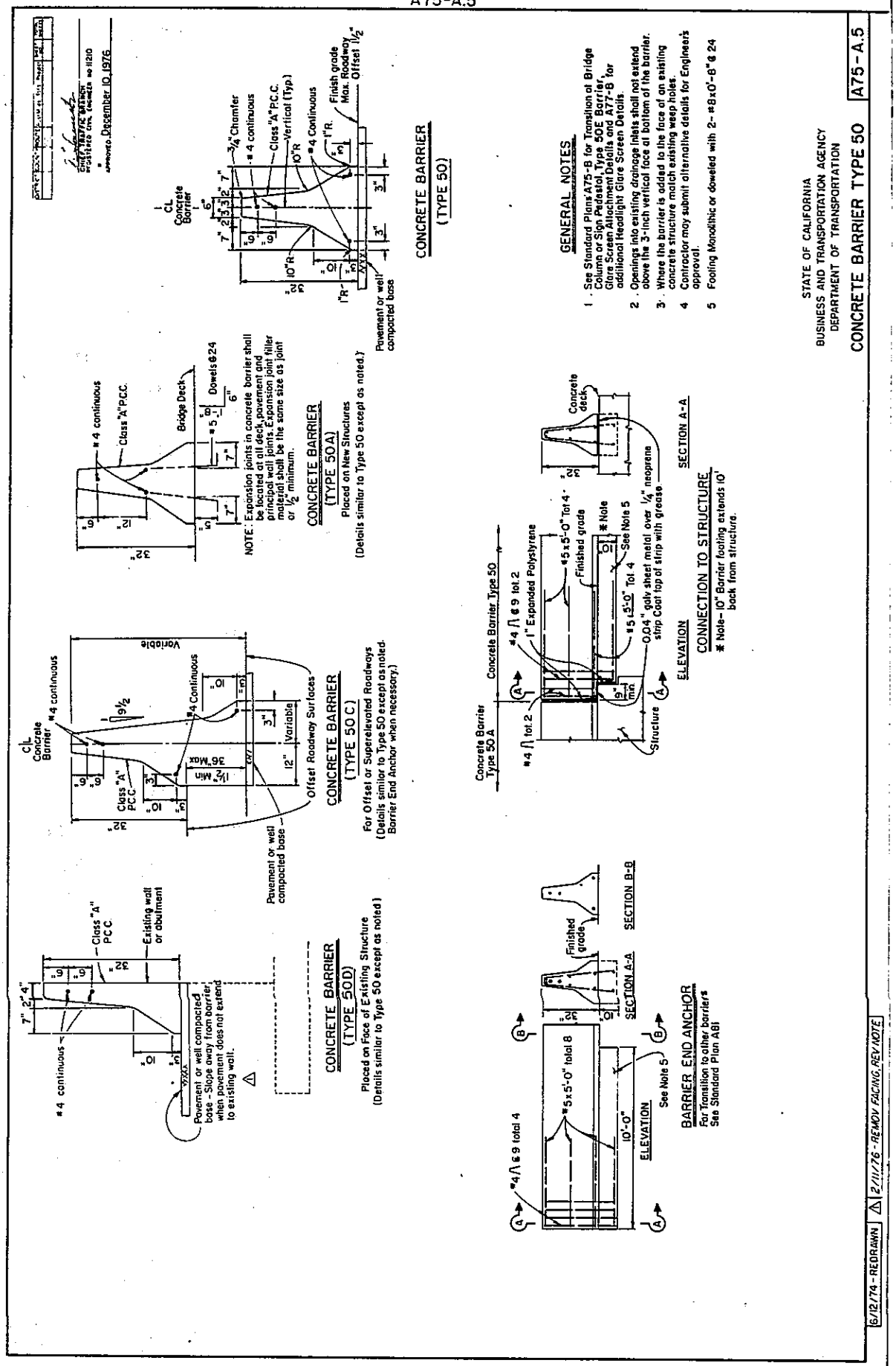

Figure 2

ClibPDF - www.fastio.com

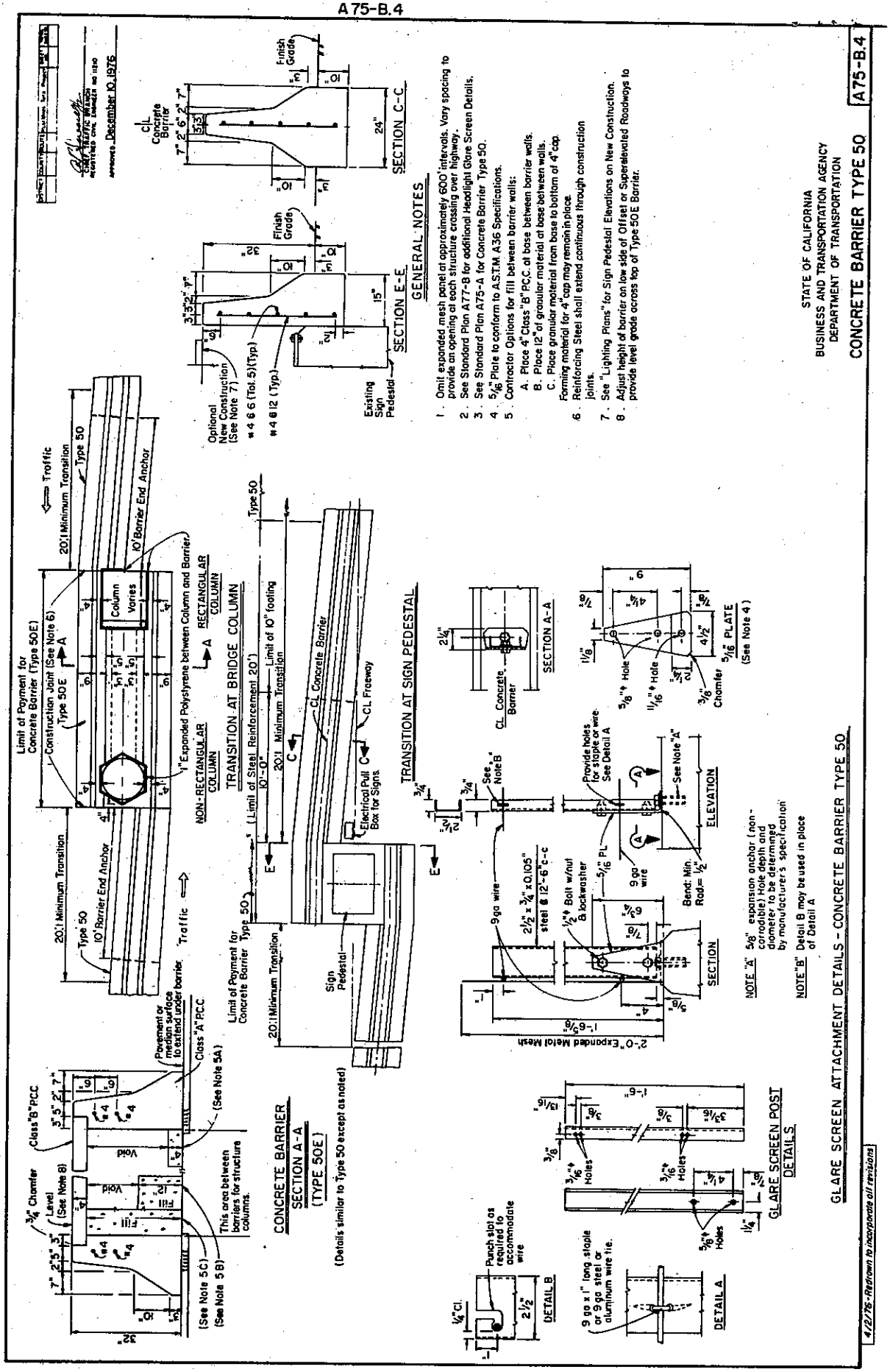

Figure 3

ClibPDF - www.fastio.com

TECHNICAL DISCUSSION

Test Facility and Equipment

The vehicular impact test was conducted at the Caltrans Dynamic Test Facility in Bryte, California. The test vehicle complied with NCHRP Report 153(12). A description of test equipment mounted on the test vehicle is included in the Appendix. Also included is a detailed description of the photographic and electronic data collection equipment used for the test.

Barrier Design and Construction

The 120 ft (36.6 m) long test barrier was cast-in-place without a footing on top of a 2 1/2 inch (64 mm) thick asphalt concrete surface, Figure 4.

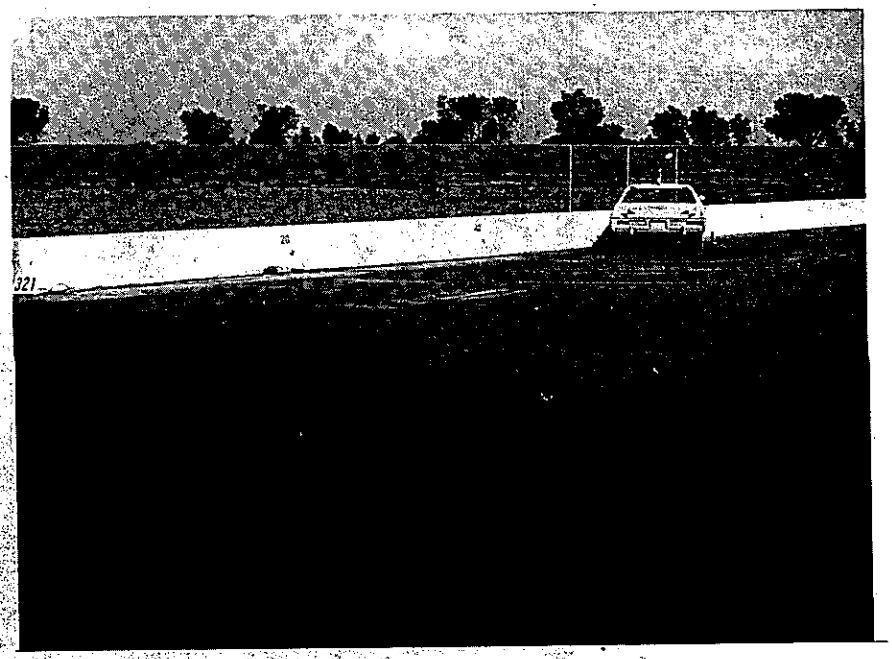

Figure 4, Test Barrier

ClibPDF - www.fastio.com

The barrier contained two continuous longitudinal No. 4 (12.7 mm) steel reinforcing bars (Grade 40) placed at 6 and 12 inches (152 and 305 mm) down from the top of the barrier.

There were no construction or contraction joints in the test barrier section, however, random shrinkage cracks appeared at 26.3, 37, 60, 75.4, and 90 feet (8.0, 11.3, 18.3, 23.0, and 27.4 m) from the upstream end on both sides of the barrier. A typical shrinkage crack is shown in Figure 5.

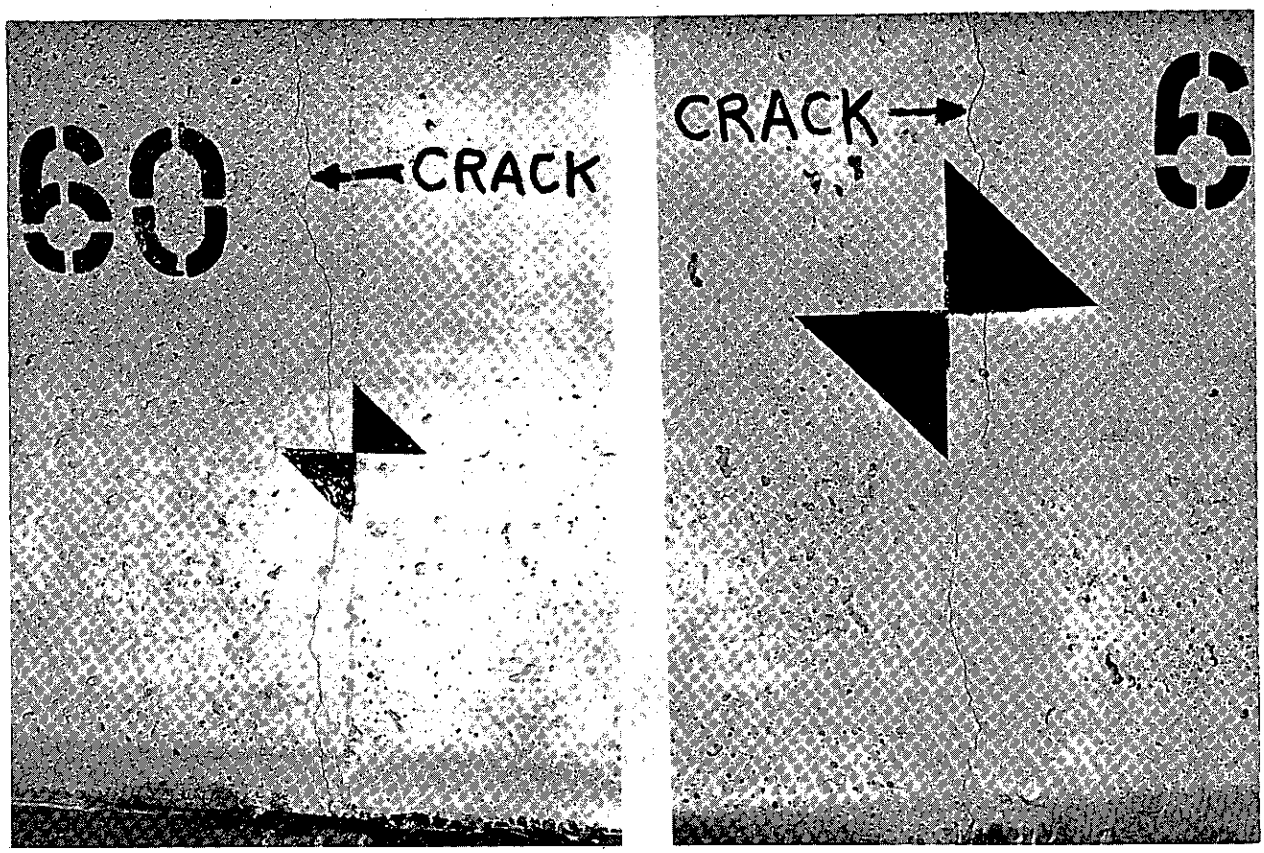

Impact Side Back Face

Figure 5, Shrinkage Crack at Middle of Test Barrier, Sta. 60+00

ClibPDF - www.fastio.com

A concrete mix design with 6 sacks of portland cement per cubic yard (0.77 m^3) and 1 inch (25 mm) maximum size aggregate was used. This mix design was similar to that used for constructing New Jersey CMB with a slipforming machine. The 28 day compressive strength of the concrete was 4504 psi (31.1 MPa). The strength of the concrete at the time of the crash test, the 36th day, was 4738 psi (32.7 MPa).

Small cracks in the asphalt concrete paving at each end of the test barrier were evidence of a developed bond strength between the bottom of the barrier and the paving which did not fail during longitudinal shrinkage of the concrete barrier.

Test Results

Test 321: 4700 lb (2130 kg) vehicle/61 mph (27 m/s)/26 degrees (0.46 rad).

Impact Description - The left front of the 1973 Dodge Polara sedan impacted the middle of the concrete median barrier 59 feet (18 m) from its upstream end. During the initial impact, the right front wheel was forced under the vehicle towards the barrier. As the vehicle climbed and began to roll away from the barrier, the vehicle momentarily pivoted about its lowered right front wheel allowing the right side of the vehicle to approach the ground. During the pivoting motion, the left back side of the vehicle swung around to impact the barrier. At this instant the vehicle, having rolled 24 degrees (0.42 rad) away from the barrier, grazed only the top edge of the barrier. The vehicle remained in contact with the barrier for 16 feet (4.9 m). It continued to roll and yaw clockwise while traveling adjacent to the barrier, becoming airborne for about 5 feet (1.5 m) and attaining a maximum height of 5.5 feet (1.7 m) above ground (measured at the left rear bumper). The vehicle reached the

ClibPDF - www.fastio.com

end of the barrier at an attitude nearly perpendicular to the barrier. During this time it reached a maximum roll angle of 48 degrees (0.84 rad). Returning to the ground, the vehicle rolled counterclockwise, rolling over once, and came to rest approximately 103 feet (31.4 m) from the end of the barrier. In this position, the vehicle was 23 feet (7.0 m) away from the impact side of the barrier and faced back towards the impact area almost parallel to the centerline of the barrier. Figure 8, at the end of the Test Results section of this report, summarizes the data for Test 321 and includes sequential impact photographs and a vehicle trajectory diagram.

Barrier Performance and Damage - The test barrier redirected the impacting vehicle. The vehicle did not penetrate or vault the barrier.

There was no permanent lateral barrier movement during the test. A maximum dynamic lateral barrier deflection of 1/4 inch (6 mm) was recorded at a point 5 feet (1.5 m) downstream from initial barrier contact 0.093 seconds after impact. Figure 6A in the Appendix shows the barrier deflection versus time plots of four deflection potentiometers located 6 inches (152 mm) down from the top of the barrier and placed along the barrier at 10 foot (3.1 m) intervals.

The barrier did not crack or sustain any structural damage during the test. Beginning at the point of impact, the barrier was scuffed and scraped for about 16 feet (4.9 m), as shown in Figure 6.

Impact occurred at a shrinkage crack located in the middle of the barrier at 60 feet (18 m). There was no apparent change in the width of this crack after the test. There was also no change in the size of the other shrinkage cracks as a result of impact.

ClibPDF - www.fastio.com

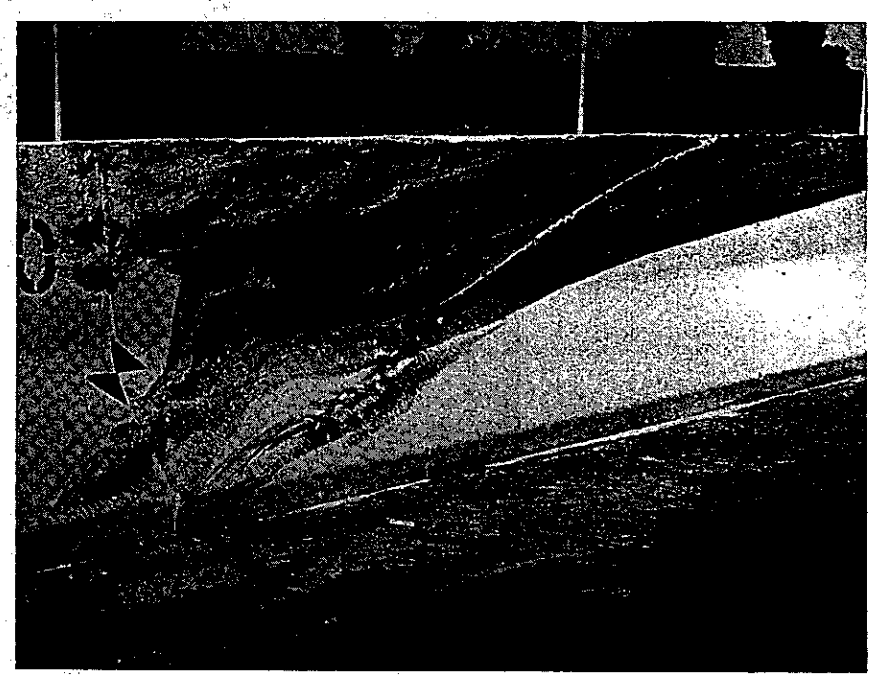

Figure 6, Scuff Marks and Scrapes on Barrier

Vehicle Damage - The test vehicle was severely damaged from the barrier impact and the resulting vehicle rollover, Figure 7. The left front quarter panel was crushed back under the vehicle. The floor of the vehicle in the vicinity of the brake pedal was slightly pushed up into the passenger compartment; however, there was no intrusion of vehicle or barrier components. Damage resulting from the vehicle rollover included crushing in of the top of the vehicle about 6 inches (152 mm), broken front and back windshield glass, dents along both sides and on top of the trunk area of the vehicle, and ejection of the vehicle's battery. The battery was found about 60 feet (18 m) away from the end of the barrier and about 11 feet (3.4 m) in front of it. Assessment of vehicle damage according to the Traffic Accident Scale (TAD)(7) and Vehicle Damage Index (VDI)(8) was as follows:

TAD: LFQ-5, LD-3, L&T-5
VDI: 11LFEW5, 00TYG03

ClibPDF - www.fastio.com

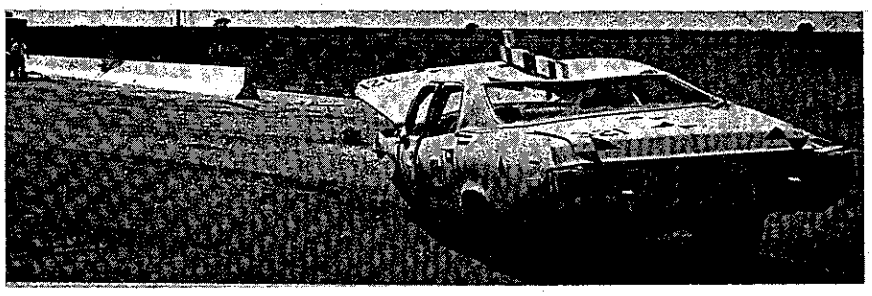

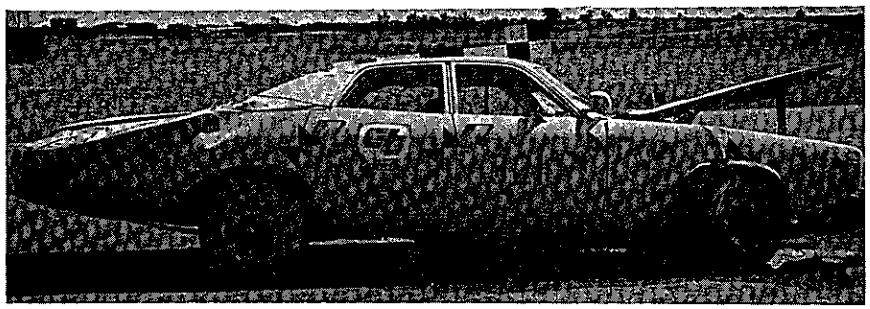

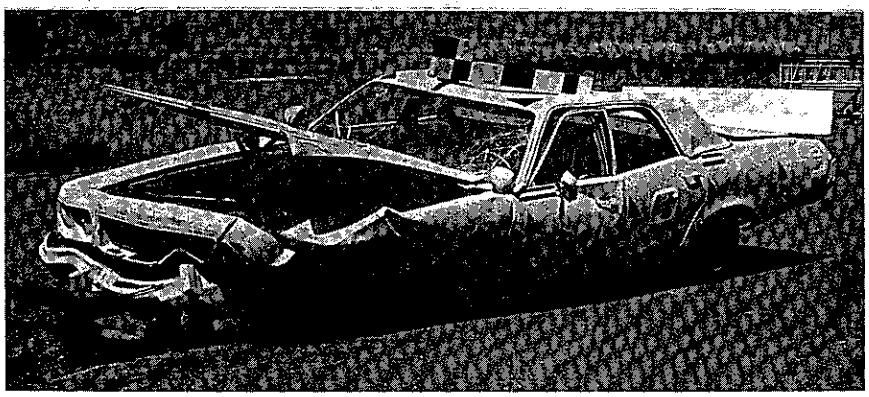

Figure 7, Vehicle Damage

ClibPDF - www.fastio.com

FIGURE 8, DATA SUMMARY SHEET

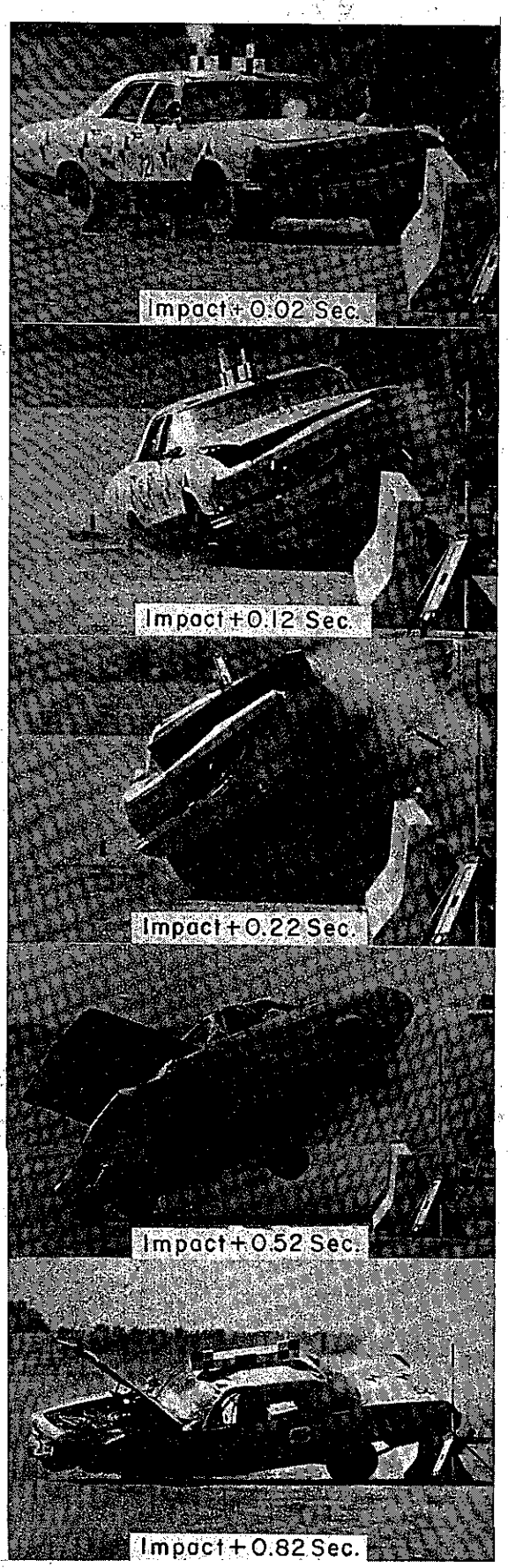

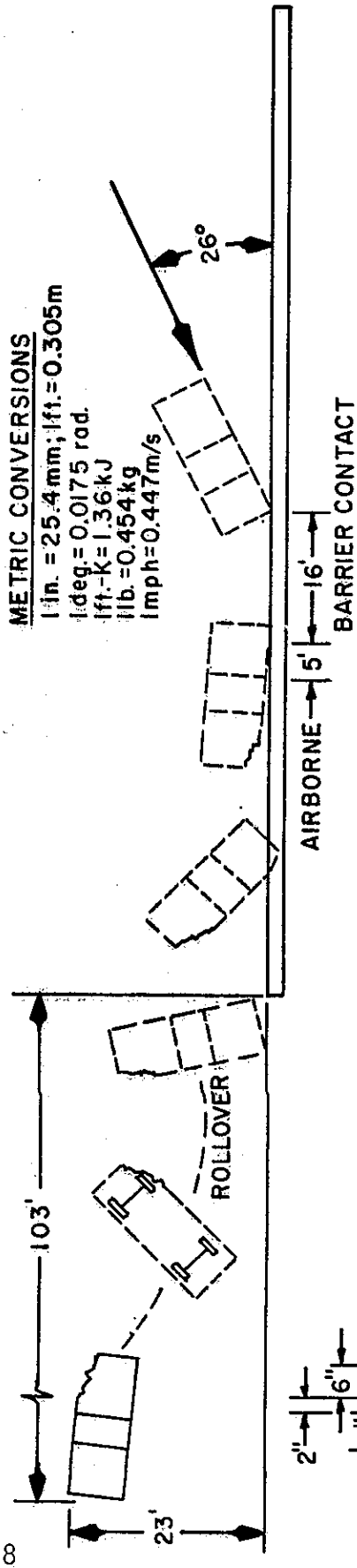

Barrier . . . Continuous CMB Without a Footing	
Length of Barrier . . . . . 120 ft.	
Max. Permanent Lateral Defl. . . . . 0 in.	
Max. Dynamic Lateral Defl. . . . . 0.25 in.	
Max. Vehicle Roll. . . . . 48°	
Max. Vehicle Rise. . . . . 5.5 ft.	
Lateral K.E = $\frac{M(V\sin\theta)^2}{2}$ . . . . . 112 ft-kips	
Test No. 321	
Date 9/15/76	
Vehicle. . 1973 Dodge Polara	
Vehicle Weight . . . .4700 lbs.	
Impact Speed . . . . .61 mph.	
Impact Angle . . . . . .26°	
Vehicle Damage: TAD LFQ-5, LD-3, L&T-5; VDI 10LFEW5, 00TYG03	

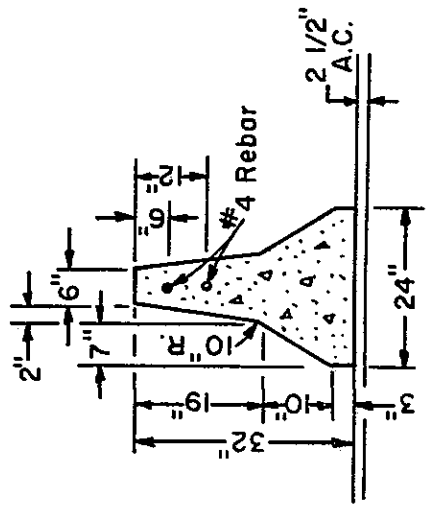

TYPICAL SECTION

ClibPDF - www.fastio.com

Discussion of Results

Safety performance of the CMB used in Test 321 can be judged by comparison with the three appraisal factors, defined in NCHRP Report 153 "Recommended Procedures for Vehicle Crash Testing of Highway Appurtenances"(12). These factors are structural adequacy, impact severity, and vehicle trajectory and are discussed in the following three sections of the report.

Table 1 summarizes data from other tests on CMB and can also be used on a relative basis for judging the results of Test 321. Included in the table in chronological order are data from tests on four CMB designs tested at 25 degrees (0.44 rad) by Caltrans since 1967(9,10,11) along with other large angle tests of similar designs conducted by the Texas Transportation Institute (TTI)(2) and the National Institute for Road Safety (NIRS) of France(4). Also included for comparison are three 48,800 lb (22,100 kg) tractor/trailer truck tests conducted by TTI(3), a 21,650 lb (9,830 kg) tank truck test by NIRS(4), and three 40,000 lb (18,200 kg) scenicruiser bus tests conducted by Southwest Research Institute (SWRI)(5) on CMB.

Structural Adequacy - The test barrier redirected the test vehicle without moving laterally, rotating, or sustaining any structural damage. The barrier did not crack during the test. The point of impact was located at a shrinkage crack. This crack, however, did not widen from the impact. Other than removing the scuff marks on the face of the barrier, little maintenance would be required. The gouges in the face of the barrier probably could be neglected.

The test vehicle did not penetrate or vault the barrier. However, during impact it went through a series of strong yawing and rolling motions. The roll was 24 degrees (0.42 rad)

ClibPDF - www.fastio.com

TABLE* I, DATA SUMMARY OF LARGE ANGLE PASSENGER VEHICLE AND HEAVY VEHICLE CMB CRASH TESTS

TEST NO.	REF.	BARRIER (8)	LENGTH ft.	FOOTING, ANCHORAGE	VEHICLE TEST PARAMETERS: YEAR & MAKE	WEIGHT lbs.	SPEED mph	IMPACT ANGLE°	KINETIC ENERGY 1000 ft-lb	LATERAL (23) KINETIC ENERGY 1000 ft-lb	VEHICLE (9) DECELERATION Gs: LONG.	LAT.	VEHICLE TRAJECTORY: EXIT (13) ANGLE°	RISE (14) ft.	ROLL (16) degrees	EXIT (19) Speed mph	BARRIER CONTACT ft.	AIRBORNE DISTANCE ft.	MAX. (22) REBOUND ft.	MAX. PERM. LATERAL DEFLECTION IN	REMARKS
162	(1) (2) CALIF.	Unreinforced Concrete	160	24"x 10" Deep Concrete Footing	1965 Dodge Polara	4540	63	25	602	108	NA	NA	16	NA	25	51	12.5	20	47	Ø	Vehicle redirected
262		Prestressed Type 50 4-1/2" ϕ Strands @ 28 kips each	150	NONE	1970 Mercury Monterey	4960	59	25	577	103	7.0	11.6	NA	2.8	28	57	13	50	43	Ø	Vehicle redirected, but rolled
263		Prestressed Type 50 4-1/2" ϕ Strands @ 28 kips each	150	NONE	1970 Mercury Monterey	4960	66	25	722	129	NA	NA	8	2.7	35	55	14	55	51	Ø	Vehicle redirected, but rolled; torsional fracture in barrier.
264		Prestressed Type 50 3 of 4-1/2" ϕ Strands @ 28 kips each; 1 @ 0 kips	150	NONE	1969 Dodge Polara	4860	64	25	665	119	5.2	13.0	5	3.0	43	54	15	20	52	Ø	Vehicle redirected
265		Prestressed Type 50 4-1/2" ϕ Strands @ 10 kips each	150	NONE	1968 Dodge Polara	4780	62	24	614	102	NA	NA	4	3.7	40	52	13	30	42	Ø	Vehicle redirected; hairline fracture
CMB-1	(3) (4) T.T.I.	Reinforced Concrete 8-#5 rebars	50	3-18" diameter CIDH Concrete Shafts	1963 Plymouth	4000	62.4	25	521	93	(10) 8.7/3.2	(10) 16.1/4.4	7.3	NA	NA	NA	NA	NA	NA	Ø	Vehicle redirected
CMB-2			150	1" layer of asphalt concrete at front & back face of barrier	1964 Chevrolet	4230	55.7	25	439	78	(10) 10.3/1.8	(10) 13.3/2.8	6	NA	NA	NA	NA	NA	NA	Ø	Vehicle redirected
CMB-5					Tractor-trailer Truck	48,800 includes 22,800 ballast	34.9	19.1	1986	213	NA	NA	NA	0.7/1.3 (15)	7 (17)	NA	150 (20)	Ø	NA	Ø	Vehicle redirected
CMB-6							33.8	15.5	1863	133	NA	NA	NA	0.7/1.6 (15)	6 (17)	NA	150 (20)	Ø	NA	Ø	Vehicle redirected
CMB-7							44.7	15	3258	218	NA	NA	NA	1/1.6 (15)	17 (17)	NA	150 (20)	Ø	NA	Ø	Vehicle redirected
301	(5) CALIF.	Reinforced Concrete 1-#4 rebar Slipformed Type 50 Over Lowered Cable Barrier	97	H2 1/4 x 4.1 Steel Posts @ 8'-0" spacing 1'-0" above grade; 3/4" cable attached to posts; turnbuckle w/anchor rod embedded in conc. end anchors	1969 Dodge Polara	4860	68	27	751	155	11.7	13.8	7	3.2	27	50	13.1	30	31	0.08	Vehicle redirected
MI-ISC 01/319	(6) FRANCE	Reinforced Concrete 2-#4 rebars (Same location as Calif. Test 321)	> 160	NONE	404 Peugeot	2745	52	31	248	66	>10 (11)	16 (11)	Small	NA	NA	NA	8.5	Slightly	NA	Ø	Vehicle redirected
TS-ISC 02/320					Truck Bernard Type 19 DA150	21,650	44.7	21	1446	186	7.5 (11)	11.5 (11)	Small	NA	NA	NA	59	Some	NA	Ø	Vehicle redirected 8"x 9' section of barrier top broke out
CMB-21	(7) SWRI	Reinforced Concrete 1-#4 rebar	200 With const. joints 50ft. from each end	1" layer of asphalt concrete placed at base of barrier on the side opposite impact	1955 GMC Scenicruiser Bus Model PD-4501	40,000 With 10,200 ballast	41.7	11.5	2324	92	0.9 (12)	0.7 (12)	Small	NA	8 (18)	NA	25.9	Ø	NA	Ø	Vehicle redirected
CMB-22							51.6	6.6	3559	47	0.9 (12)	0.8 (12)	Small	NA	9 (18)	NA	28	Ø (21)	NA	Ø	Vehicle redirected
CMB-23							52.9	16	3741	284	0.8 (12)	1.0 (12)	Small	NA	24 (18)	NA	65	Ø	NA	31	Vehicle redirected; extensive barrier damage
321	CALIF.	Reinforced Concrete 2-#4 rebars	120	NONE	1973 Dodge Polara	4700	61	26	584	112	—	—	7	5.5 (24)	48	45	16	5	23	Ø	Vehicle redirected but rolled

*Footnotes on following page

ClibPDF - www.fastio.com

TABLE 1, continued

DATA SUMMARY OF LARGE ANGLE PASSENGER VEHICLE
AND HEAVY VEHICLE CMB CRASH TESTS

Footnotes for Table 1

(1) California Division of Highways, report reference 9.

(2) California Division of Highways, report reference 10.

(3) Texas Transportation Institute, report reference 2.

(4) Texas Transportation Institute, report reference 3.

(5) California Department of Transportation, report reference 11.

(6) National Institute for Road Safety, report reference 4.

(7) Southwest Research Institute, report reference 5.

(8) All have the New Jersey median barrier cross section except CMB-1, CMB-2, CMB-5, CMB-6 and CMB-7 which are 2" wider at the top and 3" wider at the bottom.

(9) Maximum 50 millisecond accelerometer averages except for CMB-1, CMB-2, CMB-21, CMB-22, CMB-23, MI-ISC 01/319 and TS-ISC 02/320.

(10) Maximum/average deceleration values

(11) Peak deceleration values.

(12) Maximum 50 millisecond averages obtained from high speed film analysis

(13) Direction of travel of vehicle c.g. immediately following final contact with barrier.

(14) Maximum height above ground of the left front wheel unless noted.

(15) Rise of center of front bumper/rise of center of mass of truck cab.

(16) Maximum rotation about the longitudinal axis of the vehicle away from the face of the barrier unless noted.

(17) Trailer roll only.

(18) Roll toward barrier.

(19) Velocity of vehicle c.g. immediately following final contact with barrier.

(20) Front wheels locked in straight ahead steering position prior to impact.

(21) Right front tire airborne for 0.3 seconds.

(22) Maximum lateral distance of vehicle travel (includes width of vehicle) from face of barrier after impact.

(23) $\frac{m(V \sin \Theta)^2}{2}$

(24) Maximum rise above ground of left rear quarter panel of vehicle.

Metric Conversions

1 in. = 25.4mm	1 deg. = 0.0175 rad.
1 ft. = 0.305 m	1ft.-lb= 1.36 J
1 lb. = 0.454kg	1 mph = 0.447 m/s

ClibPDF - www.fastio.com

when the vehicle was parallel with the barrier and incurred a light secondary impact (backslap). This roll angle increased to 48 degrees (0.84 rad) before the vehicle rolled the other way. Eventually it rolled over after it was redirected.

In comparison, large roll angles between 28 and 43 degrees (0.49 and 0.75 rad) were also reported for some of the earlier 25 degree (0.44 rad) impact tests of a prestressed CMB without a footing conducted by Caltrans in 1972, Table 1. Further analysis of these tests (Tests 262 to 265) indicated vehicle roll angles of 21 degrees (0.37 rad) at the time of their secondary impacts. Two of the four vehicles in these tests (Tests 262 and 263) rolled over after being redirected. Yaw angles approaching 90 degrees (1.58 rad) also contributed to the vehicle rollovers for these tests.

In contrast, the vehicle for Caltrans Test 301, Table 1, did not yaw excessively and the roll angle of the vehicle at the time of its secondary impact was only 11 degrees (0.19 rad). It did not roll over.

Hence, it appears that in severe impact tests with 4500 lb (2040 kg) vehicles having impact speeds/angles of 60-65 mph (27-29 m/s)/25 degrees (0.44 rad) there is a likely possibility of vehicle rollovers. Slight differences in vehicle suspensions and crushability or other variables are critical.

The lack of a footing, however, did not influence vehicle roll in Caltrans Test 321.

The results of heavy vehicle tests of CMB were included in Table 1 to point out the ability of New Jersey CMB without footings to contain heavy vehicles. The three TTI tractor/trailer truck tests, CMB-5, CMB-6, and CMB-7 cannot be compared directly with the other heavy vehicle tests in Table 1. The

ClibPDF - www.fastio.com

continuous CMB used for the TTI tests was heavily reinforced with 8 longitudinal No. 5 (15.9 mm) steel reinforcing bars and had an 8 inch (203 mm) top width and a 27 inch (686 mm) base width as opposed to the standard New Jersey shape used for the other heavy vehicle tests in Table 1. The New Jersey shape has a top and bottom width of 6 and 24 inches (152 and 610 mm) respectively. Regardless of these differences, however, the vehicles in the TTI tests were redirected and the test barrier for these tests did not move laterally or suffer any structural damage.

The two French tests also summarized in Table 1, MI-ISC 01/319 and TS-ISC 02/320, were conducted on the same barrier design used for the project of this report. It also contained two longitudinal steel reinforcing bars, equivalent to the U. S. standard No. 4 (12.7 mm) rebar, placed in the same locations as those used for this project. In addition, the French barrier was slipformed without a concrete footing on an asphalt concrete surface. No lateral barrier movement was reported for either the 2745 lb (1250 kg) Peugeot passenger vehicle test or the 21,650 lb (9830 kg) tank truck test. In both tests, the vehicles were redirected by the barrier. There was no barrier damage in the light weight passenger vehicle test; however, in the truck test an 8 inch by 9 foot (203 mm x 2.7 m) section of the barrier stem was broken out during the impact. The lateral impact kinetic energy was about 66% greater for the truck test than that for Test 321.

The three tests conducted by SWRI also verify that New Jersey shape CMB without a continuous concrete footing can adequately redirect heavy vehicles. There were three differences in the barrier for these tests compared to the barrier used for Test 321. First, only one continuous longitudinal No. 4 (12.7 mm) steel reinforcing bar was placed in the stem. Second, a 1 inch (25 mm) layer of asphalt concrete was placed at the base of

ClibPDF - www.fastio.com

the barrier on the side opposite of impact to restrain lateral barrier movement. Lastly, there were two construction joints in the barrier, one at 50 feet (15 m) from each end of the 200 foot (61.0 m) barrier section. The longitudinal reinforcing bar was continuous across these construction joints.

There was no structural barrier damage or lateral barrier movement in either Tests CMB-21 or CMB-22 conducted by SWRI. The 40,000 lb (18,141 kg) scenicruser bus, impacting at 11.5 and 5.5 degrees (0.20 and 0.11 rad), was smoothly redirected during these tests. The lateral kinetic energy for Tests CMB-21 and CMB-22 was 82% and 42% greater than that for Caltrans Test 321.

The lateral kinetic energy for SWRI Test CMB-23, which was conducted with the same scenicruser bus impacting at 52.9 mph (23.6 m/s) and 16 degrees (0.28 rad), was over 2 1/2 times larger than that for Caltrans Test 321. There was, however, extensive barrier damage in Test CMB-23. The maximum lateral movement of the barrier was 31 inches (787 mm). Even though the barrier was damaged, the heavy bus was redirected. The New Jersey shape CMB without a footing used for this test (except for the layer of asphalt concrete restraining lateral movement) functioned as a longitudinal beam, failing in a flexural mode. This mode of failure probably would have been quite different if a concrete footing were present. With a footing the barrier probably would have acted more like a cantilever and rotated back away from its vertical axis. If this happened, the bus might have rolled more toward the barrier. During the test, the bus rolled 24 degrees (0.41 rad) toward the barrier. Barrier rotation encourages vehicle ramping. Lateral barrier translation thus is a preferable mode of barrier failure. With this mode of failure barrier ramping is discouraged. Ramping adversely affects the post crash controllability of the vehicle and could possibly increase the chance of occupant injury.

ClibPDF - www.fastio.com

Recognizing the differences in possible failure modes between New Jersey shape CMB with and without continuous concrete footings, the addition of two more steel longitudinal reinforcing bars to the bars used in Test 321 is recommended for CMB when no concrete footing is used. These extra bars will increase the lateral strength of the barrier and should minimize the excessive lateral barrier movement similar to that reported by SWRI in their heavy vehicle bus test, Test CMB-23.

Impact Severity - NCHRP Report 153(12) recommends that impact severity for new longitudinal barrier designs be evaluated with an impact test using a 2250 lb (1021 kg) vehicle having an impact angle of 15 degrees (0.26 rad). Since the New Jersey profile has already been validated for these conditions and the objective of this project was to test the structural strength and stability of a continuous New Jersey CMB without a concrete footing, no accelerometers were mounted in the test vehicle. Representative values of vehicle decelerations for similar large angle passenger vehicle impacts into CMB are shown in Table 1. Based on a comparison of previous Caltrans test results, expected 50 millisecond average lateral and longitudinal vehicle decelerations would probably be in the range of 11 to 14 g's (108 to 137 m/s^2) and 5 to 12 g's (49 to 118 m/s^2), respectively, for this type of impact.

Although maximum vehicle decelerations probably would not have been significantly affected, the severity of possible occupant injuries probably would have increased when the vehicle rolled over. The extent of occupant injuries would depend to a large extent on the geometry of the vehicle passenger compartment and the restraint system used by the passengers. An anthropometric dummy was not used in this test.

ClibPDF - www.fastio.com

Vehicle Trajectory Hazard - The final resting position of the test vehicle after impact is shown on the Data Summary sheet, Figure 8, in the Test Results section of the report and in Figure 9 below.

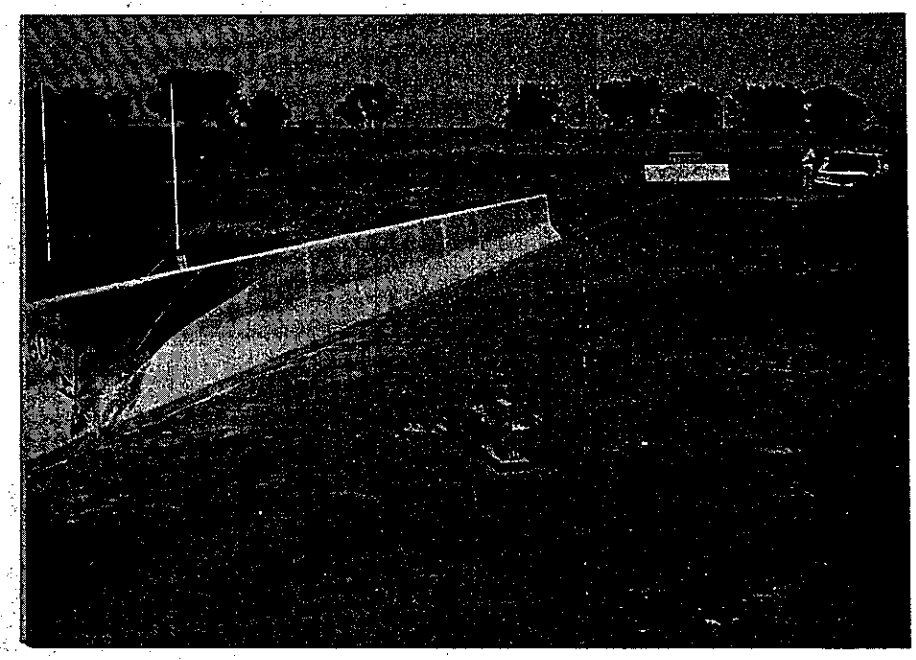

Figure 9, Vehicle Position After Impact

The postcrash trajectory of the vehicle probably would have interfered with the flow of adjacent traffic. The maximum rebound distance for the vehicle was 23 feet (7.0 m) from the impact side of the barrier. Assuming an 8 foot (2.4 m) shoulder width next to the CMB and 12 foot (3.7 m) traffic lanes, the test vehicle would have obstructed about 1 1/3 lanes of traffic. The vehicle exited the barrier at about 7 degrees (0.12 rad) at a speed of about 45 mph (20 m/s) in an uncontrolled manner. During the subsequent vehicle rollover, the vehicle's

ClibPDF - www.fastio.com

12-volt battery was ejected and was found about 60 feet (18.3 m) downstream from the end of the barrier and about 11 feet (3.4 m) from the impact side of the barrier.

The postcrash trajectory of the vehicle probably would have been somewhat different if the test barrier had been longer than 120 feet (36.6 m). The back 2 feet (610 mm) of the vehicle would have landed on top of the barrier when the vehicle reached its maximum yaw attitude nearly perpendicular to the barrier.

ClibPDF - www.fastio.com

ClibPDF - www.fastio.com

REFERENCES

1. Evans, J. S. and W. W. White, "C. B. Report No. 2 (Preliminary) Slipform and Cast-in-Place Concrete Barriers", Value Engineering Branch, California Department of Transportation, October 1975.

2. Post, E. R., et al, "Vehicle Crash Test and Evaluation of Median Barriers for Texas Highways", Highway Research Record 460, 1973, pp 97-113.

3. Post, E. R., T. J. Hirsch, and J. F. Nixon, "Truck Tests on Texas Concrete Median Barrier", Highway Research Record 460, 1973, pp 73-81.

4. "Separateur Central", National Institute for Road Safety. La Verriere, France, 1974, pp 319-1 thru 5 and 320-1 thru 4.

5. Bronstad, M. E., L. R. Calcote, and C. E. Kimball, Jr., "Concrete Median Barrier Research", Volume 2, Research Report, Report No. 03-3716-2, Southwest Research Institute, June 1976.

6. Parks, D. M., et al, "Vehicular Crash Tests of Unanchored Safety-shaped Precast Concrete Median Barriers With Pinned End Connections", Report No. CA-DOT-TL-6624-1-76-52, California Department of Transportation, August 1976.

7. "Vehicle Damage Scale for Traffic Accident Investigators", Traffic Accident Data Project Bulletin No. 1, National Safety Council, 1968.

8. "Collision Deformation Classification, Recommended Practice J224a", 1973 Handbook, Society of Automotive Engineers, New York, 1973.

ClibPDF - www.fastio.com

9. Nordlin, E. F., R. N. Field, and J. R. Stoker, "Dynamic Tests of Concrete Median Barrier, Series XVI", Report No. 636392-2, California Division of Highways, August 1967 (or Highway Research Record 222, 1968, pp 53-89).

10. Nordlin, E. F., et al, "Dynamic Tests of Prestressed Concrete Median Barrier Type 50, Series XXVI", Report No. CA-HY-MR-6588-1-73-06, California Division of Highways, March 1973.

11. Nordlin, E. F., et al, "Dynamic Test of a Slipformed Concrete Barrier Type 50 Placed Over Existing Cable Barrier", Report No. CA-DOT-TL-6696-1-74-36, California Department of Transportation, December 1974.

12. Bronstad, M. E. and J. D. Michie, "Recommended Procedures for Vehicle Crash Testing of Highway Appurtenances", NCHRP Report 53, 1974.

ClibPDF - www.fastio.com

APPENDIX

ClibPDF - www.fastio.com

ClibPDF - www.fastio.com

APPENDIX

Test Vehicle Equipment and Guidance System

Vehicle modifications and the guidance system used for this test are itemized as follows:

1. The test vehicle gas tank was disconnected from the fuel supply line, drained and refilled with water. A one gallon (3.79 l) safety gas tank was installed in the trunk compartment and connected to the fuel supply line.

2. Two 12 volt wet-cell storage batteries were mounted on the floor of the rear seat compartment to supply power for the remote control equipment.

3. A solenoid-valve actuated CO_2 system was connected to the brake line for remote braking. With 700 psi (4.83 MPa) in the accumulator tank, the brakes could be locked in less than 100 milliseconds after activation. Brakes are activated by remote control.

4. The ignition system was connected to the brake relay in a failsafe interlock system. When the brake system was activated, the vehicle ignition was switched off.

5. A micro switch was mounted below the front bumper and connected to the ignition system. A trip line installed near impact triggered the switch, thus opening the ignition circuit and cutting the vehicle motor prior to impact.

6. The accelerator pedal was linked to a small electric motor which, when activated, opened the throttle. The motor was activated by a manually thrown switch mounted on the top of the rear fender of the test vehicle.

ClibPDF - www.fastio.com

7. A cable guidance system was used to direct the vehicle into the barrier. The guidance cable, anchored at each end of the vehicle path, passed through a slipbase guide bracket, Figure 1A, bolted to the spindle of the right front wheel of the vehicle. A steel angle bracket, Figure 2A, anchoring the end of the cable closest to the barrier to a concrete footing, projected high enough to knock off the guide bracket thereby releasing the vehicle from the guidance cable prior to impact.

Figure 1A, Slipbase Guide Bracket

ClibPDF - www.fastio.com

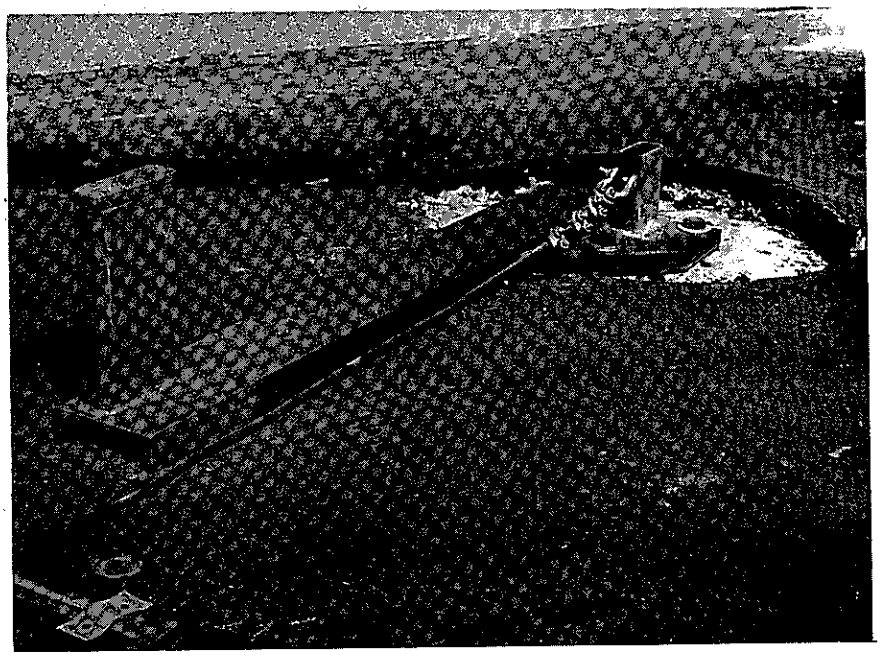

Figure 2A, Steel Knockoff Bracket

8. The remote brakes were controlled at the console trailer, Figure 3A, by using an instrumentation cable connected between the vehicle and the electronic instrumentation trailer, and a cable from that trailer to the console trailer. Any loss of continuity in these cables caused an automatic activation of the brakes.

9. A speed control device connected between the negative side of the coil and the battery of the vehicle regulated the speed of the test vehicle based on engine revolutions per minute. This device was calibrated prior to the test by conducting a series of trial runs through a speed trap composed of two tapeswitches set a known distance apart connected to a digital timer.

ClibPDF - www.fastio.com

FIGURE 3A, CAMERA LAYOUT

TEST 321

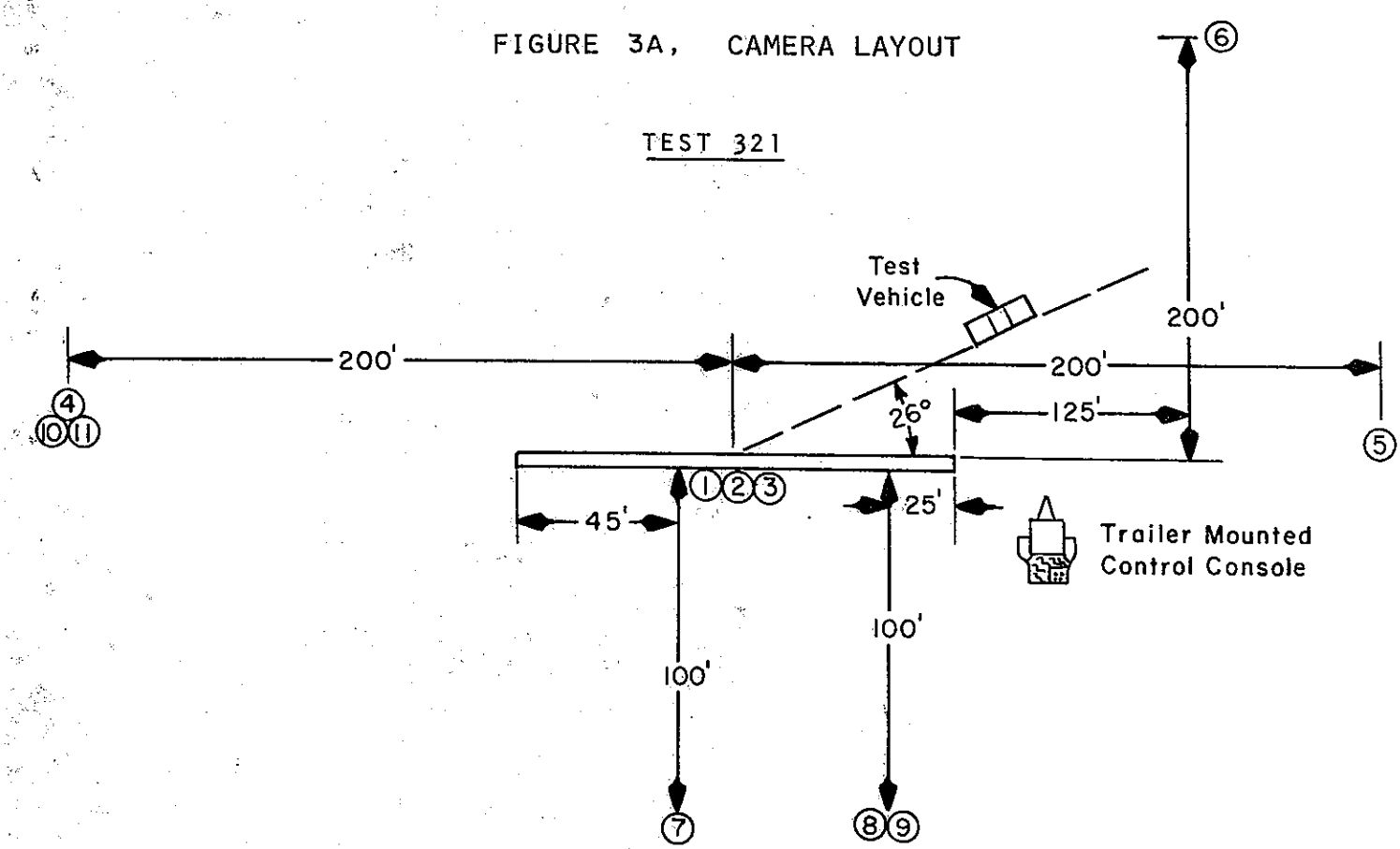

CAMERA DATA[1]

①②③ Photo-Sonics Model 16mm-1B, 13mm lens, (275-350) fps[2]; mounted on 31 ft. tower.

④⑤⑥ Photo-Sonics Model 16mm-1B, 4" lens, (300-350) fps.

⑦ Redlake Locam 16mm, 12/120mm lens, 500 fps

⑧ Photo-Sonics Model 16mm-1B, 2" lens, 350 fps, pan camera

⑨ Bolex, 1" lens, 24 fps, pan camera

⑩ 70mm Hulcher, 12" lens, 20 fps, sequence camera

⑪ 35mm Hulcher, 50mm lens, 20 fps, sequence camera

1. All cameras mounted on tripods unless otherwise noted.

2. Frames per second.

METRIC CONVERSIONS

1 in. = 25.4 mm ; 1 ft. = 0.305 m
1 deg. = 0.0175 rad.

ClibPDF - www.fastio.com

Photo-Instrumentation

Data film was obtained by using eight high speed Photo-Sonics Model 16mm-1B cameras, 200-400 frames per second (fps) and a high speed Redlake Locam camera, 500 fps. These cameras were located around the barriers as shown in Figure 3A, Camera Layout. All cameras were electrically actuated from a central control console, Figure 3A.

All cameras were equipped with timing light generators which exposed reddish timing pips on the film at a rate of 1000 per second. The pips were used to determine camera frame rates and to establish time-sequence relationships. Additional coverage of the impacts was obtained by a 70mm Hulcher sequence camera and a 35mm Hulcher sequence camera (both operating at 20 frames per second). Documentary coverage of the tests consisted of normal speed movies and still photographs taken before, during, and after each impact. Data from the high speed movies was reduced on a Vanguard Motion Analyzer, Figure 4A.

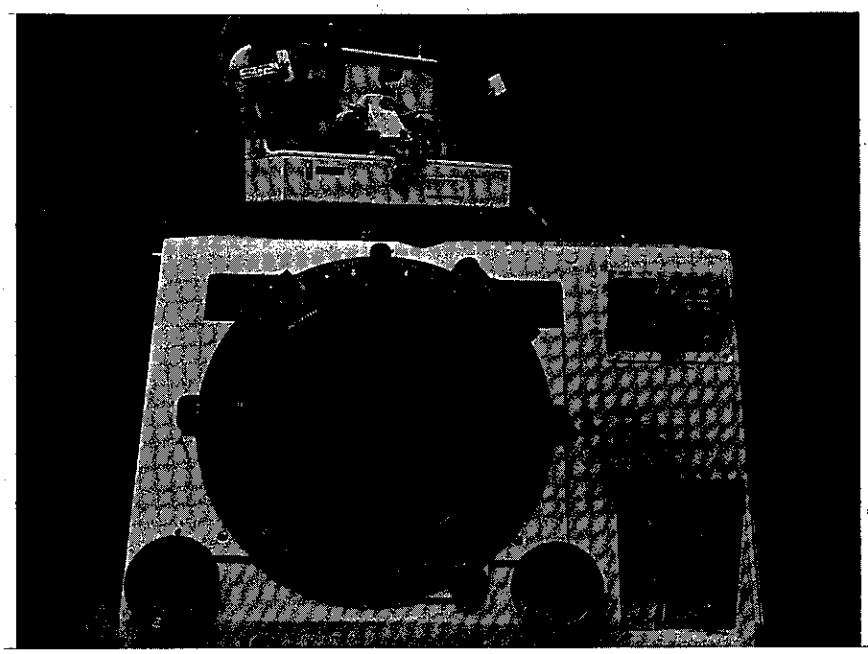

Figure 4A, Vanguard Motion Analyzer

ClibPDF - www.fastio.com

Some procedures used to facilitate data reduction for the test are listed as follows:

1. Targets were attached to the vehicle body and to the barrier.

2. Flashbulbs, mounted on the test vehicle, were electronically flashed to establish (a) initial vehicle/barrier contact and (b) the application of the vehicle's brakes.

3. Five tape switches, placed at 10 foot (3.0 m) intervals, were attached to the ground perpendicular to the path of the impacting vehicle beginning 6 feet (1.8 m) from impact. Flashbulbs were activated sequentially when the tires of the test vehicle rolled over the tape switches. The flashbulb stand was placed in view of all the data cameras and was used to correlate the cameras with the impact events.

Electronic Instrumentation and Data

Three pressure activated tape switches were also attached to the ground beginning at 5 feet (1.5 m) from impact and spaced at 12 foot (3.7 m) intervals in the vehicle approach path. When activated by the test vehicle tires, these switches produced sequential impulses which were recorded on a fourteen channel Hewlett Packard 3924C magnetic tape recorder. A time cycle was also recorded on tape concurrently with the tape switch impulses. The impact velocity of the vehicle was determined from these tape switch impulses and timing cycles.

Dynamic barrier deflection was monitored during the test by four Houston deflection potentiometers placed behind the barrier, Figure 5A.

ClibPDF - www.fastio.com

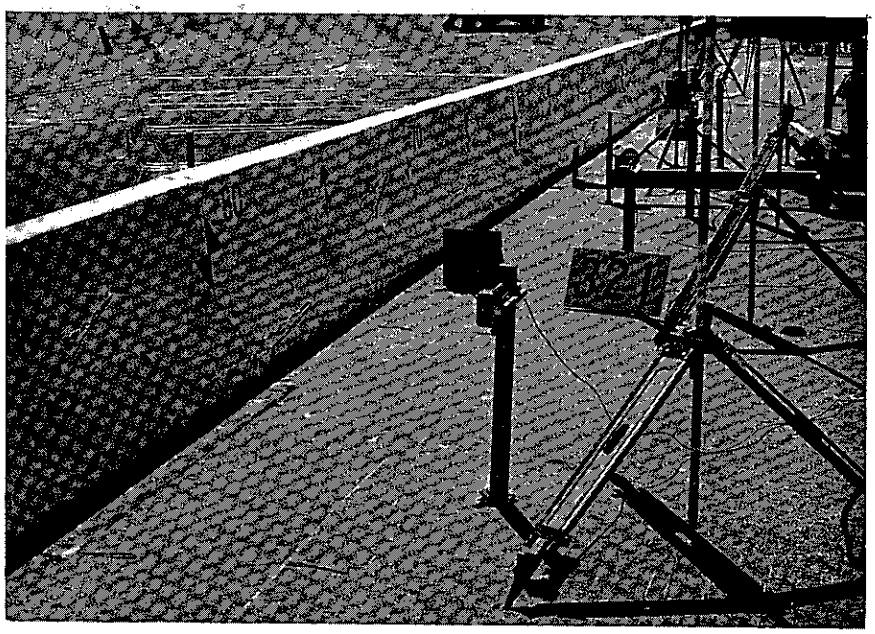

Figure 5A, Deflection Potentiometers Mounted 4 Feet (1.2 m) Behind Base of Barrier

After each test, the tape recorder data was played back through a Visicorder which produced an oscillographic trace (line) on paper for each channel of the tape recorder. Each paper record contained a curve of data representing one potentiometer, signals from the three tape switches, and the time cycle markings.

The barrier deflection versus time plots and the locations of the four potentiometers are shown in Figure 6A.

ClibPDF - www.fastio.com

Figure 6A, BARRIER DEFLECTION VS. TIME*

TEST 321, 4700 lb. VEHICLE, 61 mph, 26°
CONTINUOUS CMB WITHOUT A FOOTING

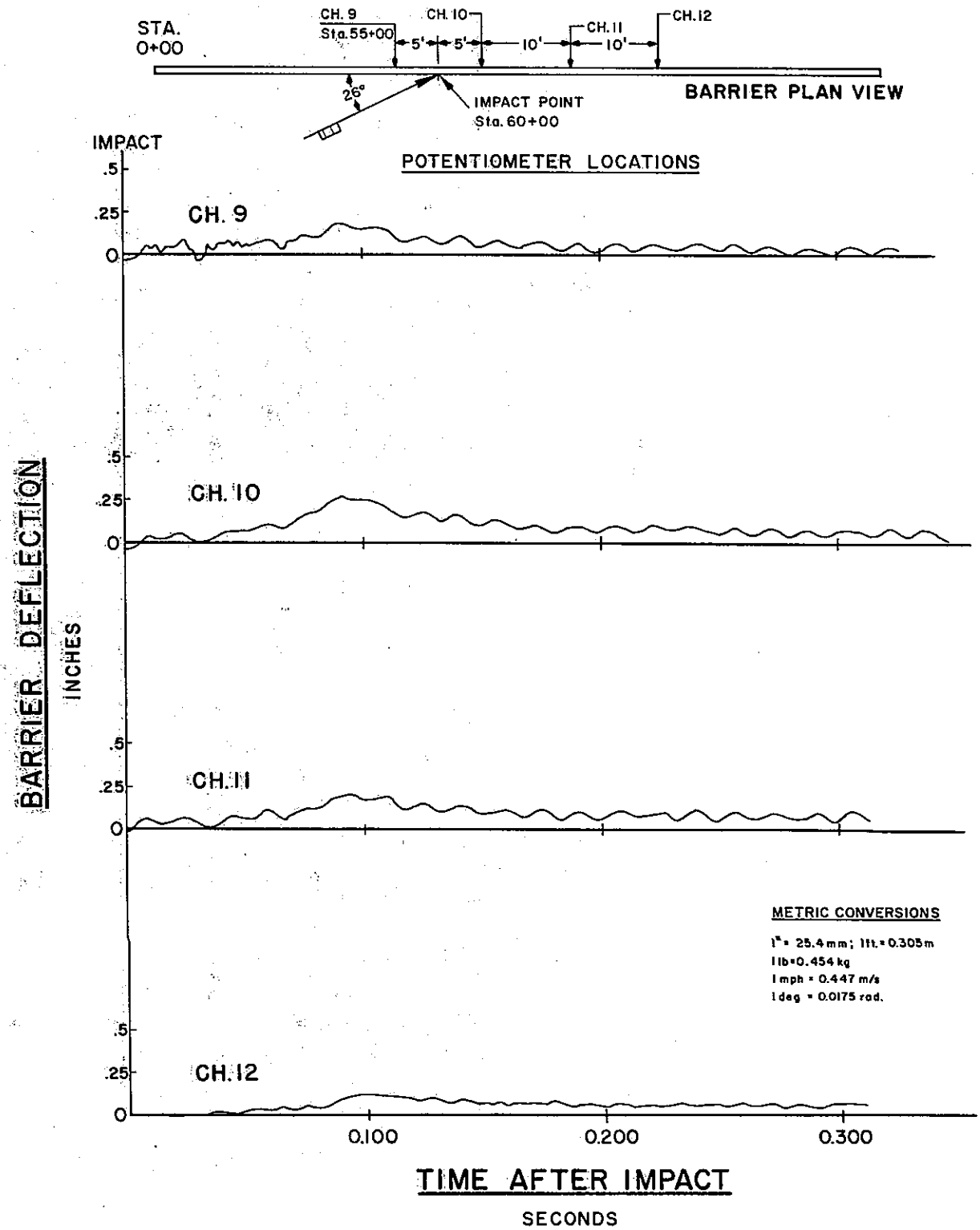

*Middle ordinate plots of unfiltered data from Houston Deflection Potentiometers located 6 inches down from top of barrier.

ClibPDF - www.fastio.com