STATE OF CALIFORNIA

DEPARTMENT OF TRANSPORTATION

DIVISION OF NEW TECHNOLOGY,
MATERIALS AND RESEARCH

VEHICLE CRASH TESTS OF A THRIE BEAM BARRIER TERMINAL

Final Report # FHWA/CA/ TL-93/19
Caltrans Study #F82TL16

Performed by ..... Office of Structural Materials
Supervised by ..... William F. Crozier, P.E.
Principal Investigator ..... Roger L. Stoughton, P.E.
Co-principal Investigator ..... Doran Glauz, P.E., and Payam Rowhani, P.E.
Report Prepared by ..... Payam Rowhani, P.E.

Roger L. Stoughton

Roger L. Stoughton, P.E.
Senior Materials & Research Engineer

William F. Crozier, Chief
Office of Structural Materials

John West, Chief
Division of New Technology,
Materials and Research

REGISTERED PROFESSIONAL ENGINEER
ROGER L. STOUGHTON
No. C14697
Exp. 3/31/97
CIVIL
STATE OF CALIFORNIA

ClibPDF - www.fastio.com

1. REPORT NO.	2. GOVERNMENT ACCESSION NO.	3. RECIPIENT'S CATALOG NO.
FHWA/CA/TL-93/19		

4. TITLE AND SUBTITLE	5. REPORT DATE
VEHICLE CRASH TESTS OF A THRIE BEAM BARRIER TERMINAL	SEPTEMBER 1993
	6. PERFORMING ORGANIZATION CODE
7. AUTHOR(S)	8. PERFORMING ORGANIZATION REPORT NO.
P. ROWHANI, D.L. GLAUZ, and R.L. STOUGHTON	636965
9. PERFORMING ORGANIZATION NAME AND ADDRESS DIVISION OF NEW TECHNOLOGY, MATERIALS & RESEARCH CALIFORNIA DEPARTMENT OF TRANSPORTATION P.O. BOX 19128 SACRAMENTO, CA 95819	10. WORK UNIT NO.
	11. CONTRACT OR GRANT NO. F82TL16
12. SPONSORING AGENCY NAME AND ADDRESS CALIFORNIA DEPARTMENT OF TRANSPORTATION SACRAMENTO, CA 95819	13. TYPE OF REPORT & PERIOD COVERED FINAL REPORT
	14. SPONSORING AGENCY CODE

15. SUPPLEMENTARY NOTES
THIS STUDY WAS CONDUCTED IN COOPERATION WITH THE U.S. DEPARTMENT OF TRANSPORTATION, FEDERAL HIGHWAY ADMINISTRATION.

16. ABSTRACT

Two vehicle crash tests were performed on a new terminal design for thrie beam barrier. The terminal consists of nine 0.91 m (36-inch) diameter corrugated steel pipes (CSP) to absorb the vehicle's kinetic energy. Some of these CSP's are braced with steel cables to increase the energy absorption capabilities of the terminal.

The tests included one with a 2077-kg (4580-lb) pickup truck at 90 km/h (55.9 mph) and 0° on the nose of the barrier and the other with a 1928-kg (4250-lb) pickup truck at 95 km/h (59.1 mph) and 20° near the nose.

The barrier did not pass NCHRP Report 230 test criteria.

17. KEY WORDS	18. DISTRIBUTION STATEMENT
Thrie Beam, Terminal, Crash Cushion, Braced Tube, Crash Test	No Restrictions. This document is available to the public through the National Technical Information Service, Springfield, VA 22161

19. SECURITY CLASSIF. (OF THIS REPORT)	20. SECURITY CLASSIF. (OF THIS PAGE)	21. NO. OF PAGES	22. PRICE
UNCLASSIFIED	UNCLASSIFIED		

ClibPDF - www.fastio.com

NOTICE

The contents of this report reflect the views of the Division of New Technology, Materials and Research which is responsible for the facts and the accuracy of the data presented herein. The contents do not necessarily reflect the official views or policies of the State of California or the Federal Highway Administration. This report does not constitute a standard, specification, or regulation.

Neither the State of California nor the United States Government endorse products or manufacturers. Trade or manufacturers' names appear herein only because they are considered essential to the object of this document.

ClibPDF - www.fastio.com

ACKNOWLEDGEMENTS

This work was accomplished in cooperation with the United States Department of Transportation, Federal Highway Administration.

Special appreciation is due to the following staff members of the Division of New Technology, Materials and Research for their enthusiastic and competent help on this project:

Anne Hernandez, test preparation, data reduction, film handling and film report; John Jewell, Mike O'Keefe, and Marcia Bond, test preparation; Oscar Vargas, test barrier contract and Holly Quan, test barrier construction; John Dautel and Shannon Harty, early design proposals; William Ng, Eric Jacobson, and Delmar Gans, electronic instrumentation and data reduction; Walt Richards, static load tests on braced CSP; Eddie Fong, Irma Gamarra-Remmen, and Ken Wahl, drafting services; and finally, Gene Weyel and the machinists in the machine shop. The early stages of this project were under the supervision of Eric Nordlin, Mike Nagai, Jay Folsom, and Robert Stoker.

Other persons from Caltrans who made important contributions were:

Ralph Bishop and Jon Hamaguchi, Division of Structures, technical consultation; Don Tateishi, Headquarters Photo Section, crash test photography; Larry Moore, and Gary Pund, Headquarters Motion Picture and Video Unit, crash test filming; Jan Boliver, Contracts.

Special thanks to Prof. John Carney III, Vanderbilt University, who first applied the concept of braced tubes in crash cushions and to Len Meczkowski of the FHWA for his valuable consultation and advice.

Robert J. Frank Construction, Inc. of Redding, California constructed the test barriers for this project.

ClibPDF - www.fastio.com

SI CONVERSION FACTORS

To Convert From	To	Multiply By
	ACCELERATION	
ft/s^2	m/s^2	0.3048
	AREA	
ft^2	m^2	0.0929
	ENERGY	
ft-lbf	Joule (J)	1.3558
	FORCE	
lbf	Newton (N)	4.4482
	LENGTH	
ft	m	0.3048
in	m	0.0254
in	cm	2.5400
	MASS	
lb	kg	0.4536
	PRESSURE OR STRESS	
psi	Pascal (Pa)	6894.76
	VELOCITY	
mph	km/h	1.6093
ft/s	m/s	0.3048

ClibPDF - www.fastio.com

TABLE OF CONTENTS

Page

ACKNOWLEDGEMENTS ii

SI CONVERSION FACTORS iii

TABLE OF CONTENTS iv

1. INTRODUCTION 5
   1.1 PROBLEM 5
   1.2 OBJECTIVE 7
   1.3 BACKGROUND 8
   1.4 LITERATURE SEARCH 12

2. CONCLUSIONS 13

3. RECOMMENDATIONS 14

4. IMPLEMENTATION 15

5. TECHNICAL DISCUSSION 16
   5.1 TEST CONDITIONS 16
      5.1.1 Braced Cylinder Tests (Static Load Tests) 16
      5.1.2 Test Facilities 20
      5.1.3 Test Barrier Design 20
      5.1.4 Test Barrier Construction 22
      5.1.5 Test Vehicles 27
      5.1.6 Data Acquisition Systems 28
   5.2 TEST RESULTS 29
      5.2.1 Test 491 29
         5.2.1.1 Impact Description - 491 33
         5.2.1.2 Vehicle Damage - 491 33
         5.2.1.3 Barrier Damage - 491 34
      5.2.2 Test 492 34
         5.2.2.1 Impact Description - 492 38
         5.2.2.2 Vehicle Damage - 492 39
         5.2.2.3 Barrier Damage - 492 39
   5.3 DISCUSSION OF TEST RESULTS 40
      5.3.1 General Safety Evaluation Guidelines - NCHRP Report 230 40
      5.3.2 Structural Adequacy 40
      5.3.3 Occupant Risk 41
      5.3.4 Vehicle Trajectory 42
      5.3.5 Comparison With Other Terminal Designs 44

6. REFERENCES 46

APPENDICES A1
A. TEST VEHICLE EQUIPMENT AND RAIL GUIDANCE SYSTEM A1
B. PHOTO - INSTRUMENTATION B1
C. ELECTRONIC INSTRUMENTATION AND DATA C1
D. TEST BARRIER MATERIALS TESTS D1
E. THRIE BEAM TERMINAL DRAWINGS E1
F. COMPUTER PROGRAMS F1

ClibPDF - www.fastio.com

1. INTRODUCTION

1.1 PROBLEM

Longitudinal highway safety barriers like guardrail and median barrier are crash tested with angle impacts along their length. Even though these tests are successful and represent most real barrier accidents, the barriers have one other point of vulnerability. Their ends require special treatment. Terminals or end treatments (the terms are used interchangeably) are connected to the ends of longitudinal barriers to handle end-on impacts which would be extremely severe if no terminal was installed. Guardrail using W-section steel rail has been ended with the widely used breakaway cable terminal (BCT) for many years (1). When median barrier using thrie beam steel rails was adopted in the mid-1970's, there was no terminal design available. Thrie beam is much stiffer and stronger than W-section rail and could not be substituted directly in the BCT design.

Since that time, thrie beam barriers have been ended by transitioning from thrie beam to a length of W-section rail and then using the standard BCT design at the end. This method of providing a terminal for thrie beam barrier results in an installation that is 42 feet longer at each end than needed if a transition and length of W-section rail were not required (1).

The BCT allows an impacting vehicle to breakaway the two end posts, buckle the rail back out of the way, and then pass through or "gate" through the end of the barrier to a safe recovery area behind the barrier. There have been efforts by several agencies in the past few years to design improved barrier terminals. Most of these designs incorporate energy absorbing features that allow better handling of the vehicle's kinetic energy, shorter terminals, and terminals that do not need to be flared away from the roadway.

Recently, several new proprietary terminals for thrie beam guardrail have been introduced, but

ClibPDF - www.fastio.com

the high costs of these terminals makes it prohibitively expensive to install them on all thrie beam barrier installations.

ClibPDF - www.fastio.com

1.2 OBJECTIVE

To develop, through full scale impact testing, a state-of-the-art, reasonably priced, non-proprietary energy absorbing terminal that can be attached directly to the end of the single thrie beam barrier, to be qualified for use on California State Highways.

ClibPDF - www.fastio.com

1.3 BACKGROUND

This project was conceived in 1975. It was originally based on the results of four vehicular impact tests conducted between 1971 and 1974. The tests were on a U-shaped guardrail envelope which used W-section steel guardrail. This envelope was called a "bullnose barrier" and was intended for use in gore areas to shield fixed objects, yet result in low vehicle accelerations if impacted. It was a low-cost substitute for a crash cushion. The tests were partially successful, but in the last test, the car over-rode the W-section beam. It was concluded that additional crash tests should be conducted on bullnose barriers built with thrie beam instead of W-section beam. The tests conducted in 1971-1974 were described in a Caltrans research report (2).

Since 1976, Caltrans has carried out a vigorous gore improvement program involving approximately 1950 freeway gore areas. Many fixed objects have been removed and over 300 crash cushions were installed. Consequently, the need for a U-shaped guardrail envelope with thrie beam (bullnose barrier) has diminished greatly. This project was originally conceived to develop a thrie beam bullnose barrier, but soon after, when the gore improvement program was initiated, the objective was modified to work on an end treatment for thrie beam barriers of all types.

The main application for a thrie beam barrier terminal would be at the end of single thrie beam median barriers (2) as described in the Problem Statement. More recently, Caltrans successfully crash tested a thrie beam bridge rail for secondary roads. A thrie beam terminal would be useful at the end of thrie beam transition barrier tested for use with this bridge rail system (3).

One problem identified in the late 1970's was at locations where the ends of bridge rails on secondary state highways are very close to intersecting access or service roads that parallel the

ClibPDF - www.fastio.com

waterway. At these locations, there is not enough room between the end of the bridge rail and the intersecting road to install a standard bridge approach guardrail flare. A good solution at some of these locations appears to be a thrie beam bridge rail with a short length of thrie beam bridge approach guardrail and a short terminal. Before thrie beam can be used efficiently for short lengths of guardrail, a crashworthy terminal design is needed.

Thrie beam is about 60 percent stronger than W-section rail, and also about 60 percent wider. Due to these attributes, it can handle a larger range of vehicle sizes, both small and large, than W-section rail. Being wider [0.51 m (20 inches) vs. 0.31 m (12 1/4 inches)], the thrie beam is normally mounted 0.13 m (five inches) higher than W-section rail and thus is more able to contain high center of gravity vehicles such as vans, trucks, and buses. It also extends 0.08 m (three inches) lower, or closer to the ground than W-section rail which provides better protection from wheel entrapment on the posts. This is significant considering the small wheels of the subcompact vehicles which are increasing in numbers on our highway. Being stronger, the thrie beam offers greater resistance to penetration, particularly by heavier vehicles.

The current emphasis on saving of energy has resulted in the complete redesign of the automobile with a resultant tremendous increase in the percentage of subcompact and mini-compact vehicles in the automotive fleet. On the other hand, in order to increase the payload of goods per gallon of fuel consumed, the percentage of large trucks and buses is increasing. There also has been an increase in the number of higher center of gravity vans, pickup campers, and other recreational vehicles. This vehicle mix is making the containment of errant vehicles by W-section barrier and guardrail a difficult problem that can be alleviated by the use of the stronger, wider thrie beam barrier and thus encourages the use of this rail. However, the lack of an appropriate terminal design for the thrie beam rail has a negative effect on the wider adoption of this superior railing system.

ClibPDF - www.fastio.com

This project began several years ago as a simple effort to develop and test a thrie beam terminal. Due to higher priority projects, a small and transient staff, and advancing technology in this subject area, a number of potential terminals designs were studied before one was finally selected that warranted testing.

In the first round of the study, gating designs similar to the BCT were proposed that called for telescoping beams, flattened beams with cutouts , laterally supported beams with steel straps, etc. Crash tests at other agencies on designs using similar approaches in the early 1980's were not very successful, particularly with 816-kg (1800-lb) cars. Therefore, these first concepts were abandoned.

About this time, it became apparent that crash cushion type energy absorbing elements needed to be incorporated in the terminal design in order to soften the impact for 816-kg (1800-lb) cars. Relatively small forces on these cars impacting off center were causing the cars to spin out and sometimes, roll over.

The second round of study focused on terminals that combined inertial elements such as sand barrels, or water jugs under a fiberglass shell in front of a shaped block of aluminum honeycomb that was attached to the flared and anchored end of a thrie beam barrier. The cost estimates for the honeycomb material seemed to make it an impractical choice, and that concept was abandoned also.

The test unit then looked at all experimental and operational terminals in the country in the mid-1980's and decided to explore a braced tube concept. Braced tubes had been used successfully in a truck mounted attenuator and were being considered for a general purpose crash cushion. This was the basic concept used for the test barriers described in this report.

ClibPDF - www.fastio.com

The developmental effort involved 1) static load tests on corrugated steel pipes to learn their crash properties (CSP was cheaper than smooth pipe, and hence it was used in our design), 2) the writing of a short computer program to simulate terminal impacts using different tube combinations and vehicle weights, and 3) one crash test each on two different barrier prototypes to gauge the feasibility of the concept and to make recommendations for a possible follow-on project. This report describes this final developmental effort in detail.

ClibPDF - www.fastio.com

1.4 LITERATURE SEARCH

A TRIS literature search was conducted by the Division of New Technology, Materials and Research Library staff. The literature search failed to disclose any information relative to a thrie beam terminal design. However, the following literature is relevant to the testing of the thrie beam barrier and attests to the excellent performance of this railing system. Much of this testing utilized a 42-foot-long W-section guardrail breakaway cable terminal and transition barrier as an anchor for the thrie beam rail test installations.

1. Bronstad, M.E., Viner, J.G., and Behm, W.E., "Crash Test Evaluation of Thrie Beam Traffic Barriers", Southwest Research Institute, January 1974

2. Bryden, J.E., and Hahn, K.C., "Crash Tests of Light-Post Thrie-Beam Traffic Barriers", New York State Department of Transportation, January 1981

3. Kimball, Jr., C.E., Bronstad, M.E., and Michie, J.D., "Heavy Vehicle Tests of Tubular Thrie Beam Retrofit Bridge Railing", Southwest Research Institute, January 1981

ClibPDF - www.fastio.com

2. CONCLUSIONS

Based on the crash test results and the guidelines in NCHRP Report 230 (4), the following can be concluded:

1. The two thrie beam barrier terminal designs which were crash tested did not meet the criteria set forth in NCHRP Report 230 (5).

2. The basic elements in the terminals worked quite well, and about as expected. The concept of energy absorbing steel tubes is viable and has merit.

ClibPDF - www.fastio.com

3. RECOMMENDATIONS

1. The two thrie beam barrier terminal prototypes crash tested should not be approved for use on California Highways.

2. If these terminals are modified for further testing, two sets of bracing cables should be used, one set at the bottom and another at the top of the CSP. The steel bar anchoring the braces on the outside of the CSP should be longer and stiffer than the one in the current design so that full crush strength (and hence maximum energy dissipation) can be developed in each tube.

3. Due to the wide nose of this device, it spreads the impact forces over a larger area, hence impacts with the device are less severe than ones with a similar, narrower device. This is especially useful for the case of side impacts. It is recommended that any future studies based on this concept look further into the viability of this device for side impacts.

4. Any further design modifications should keep the maintenance aspects of this system in mind. Currently, repairing a terminal after impact requires the use of specialized heavy equipment and may require traffic control (lane closures, etc.). Future designs should try to make repairs and replacement of parts possible without the need for any heavy equipment.

5. Since this device is non-proprietary, it is recommended that further studies be initiated to modify the design to meet crash test requirements provided maintenance and repair characteristics can be improved. A cost/benefit analysis might show that it would save the State considerable sums of money as compared to current proprietary devices.

ClibPDF - www.fastio.com

4. IMPLEMENTATION

This project was concluded before all required tests in NCHRP Report 230 were completed. The only implementation of these research results may be in future research projects, if it is decided to continue with this design concept or a related one.

ClibPDF - www.fastio.com

5. TECHNICAL DISCUSSION

5.1 TEST CONDITIONS

5.1.1 Braced Cylinder Tests (Static Load Tests)

The thrie beam terminal design is based on the research of John Carney (4) and The Texas Transportation Institute (TTI) (3).

Carney's system uses crossbracing in steel tubes to increase the energy absorbing capacity of a simple steel tube. He first applied this concept in the Connecticut truck mounted attenuator, and later in the various Connecticut Impact Attenuation Systems. The TTI research investigated corrugated steel pipes for absorbing energy. This was part of their concerted effort to develop new crash cushion concepts in the late '60s and early '70s, in particular, the steel drum attenuator. Our system investigated the combination of the two above systems; crossbracing in corrugated steel pipe to increase the energy absorbing capacity of simple CSP.

Our static load tests focused on determining the energy absorbing properties of corrugated steel pipe with and without crossbracing. The majority of tests were conducted using 14 ga. pipe segments. The point of the tests was to establish a wide range of braced pipe data indicating the change in strength properties as a function of bracing angle with constant basic pipe strength. A limited number of tests were conducted to indicate the change in strength properties as a function of the thickness of the pipe walls. Table 1 gives a description of the static load tests which were conducted. Figure 1 shows the apparatus used for the testing and Figure 1a shows the test results.

ClibPDF - www.fastio.com

Test Number	Test Description
1-14ANR45	14 ga. CSP, unbraced with the seam at a 45° angle from zenith.
2-14ANR00	14 ga. CSP, unbraced with the seam at zenith.
3-14ANR90	14 ga. CSP, unbraced with the seam at 90° from zenith.
4-14ANR00	14 ga. CSP, unbraced with the seam at zenith.
5-14A30	14 ga. CSP, double bracing at 30° from horizontal. Retested as 13-14A30.
6-14A00	14 ga. CSP, braced with 4 bars at 0° from horizontal. Pipe did not fail in proper mode. Bracing redesigned and tested as 12-14A00.
7-12ANR45	12 ga. CSP, unbraced with seam at 45° from zenith. Used to compare shape of curve with 14 ga. CSP (test 4-14ANR00).
8-16ANR45	16 ga. CSP, unbraced with seam at 45° from zenith. Used to compare shape of curve with 14 ga. CSP (test 4-14ANR00).
9-14A10	14 ga. CSP, double braced at 10° from horizontal.
10-14A25	14 ga. CSP, double bracing at 25° from horizontal.
11-14A20	14 ga. CSP, double bracing at 20° from horizontal.
12-14A00	14 ga. CSP, horizontal bracing with 2 bars.
13-14A30	14 ga. CSP, double bracing at 30° from horizontal.
14-14H10	14 ga. helical pipe, double bracing at 10° from horizontal.
15-12A15	12 ga. CSP, double bracing at 15° from horizontal.
16-12A20	12 ga. CSP, double bracing at 20° from horizontal.
The first 3 test were conducted at a crush rate of 0.01 m/min (1/2" per minute).	
The rest of the tests were conducted at a crush rate of 0.05 m/min (2" per minute)	

Table 1: Static Load Tests

ClibPDF - www.fastio.com

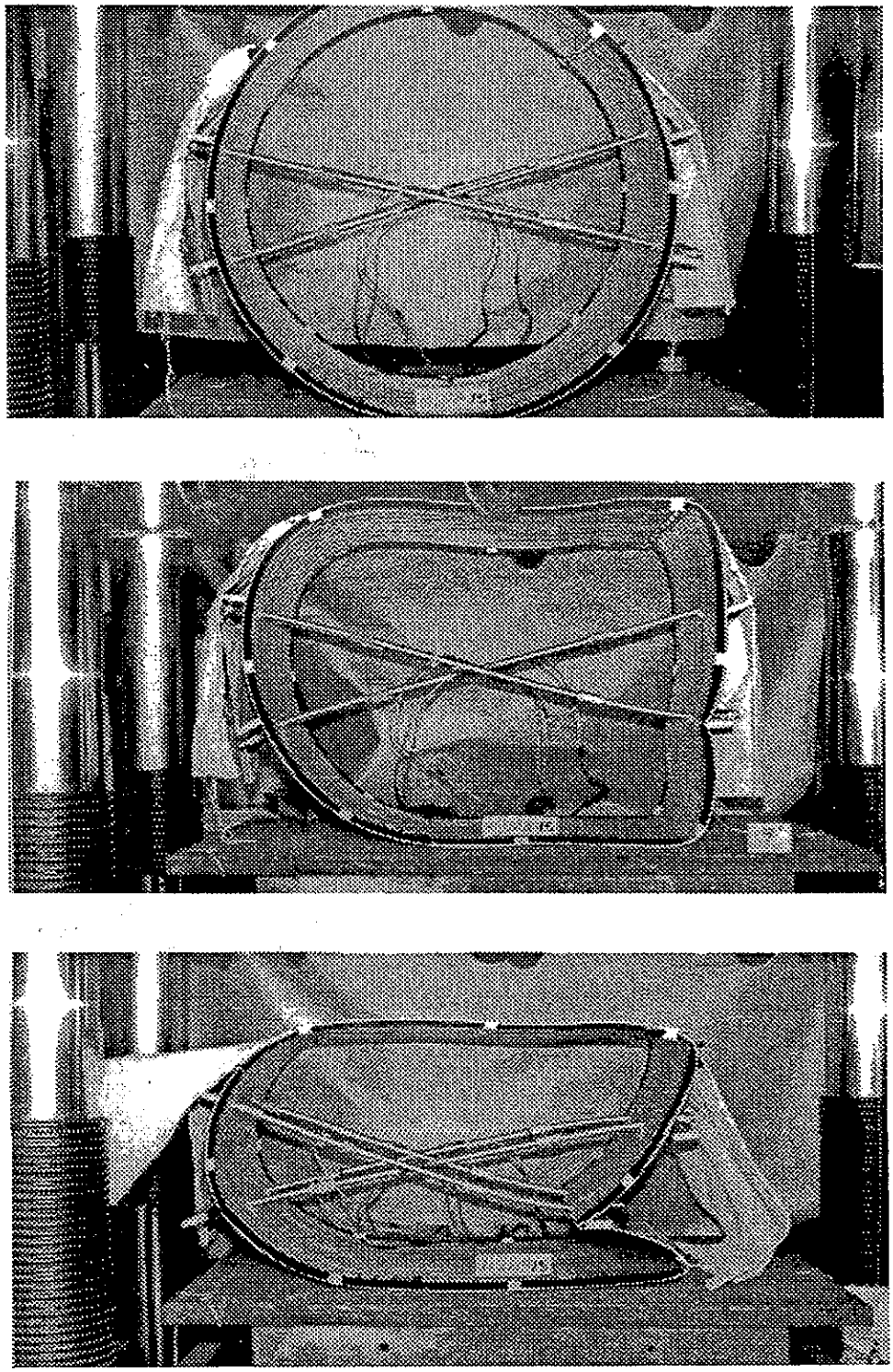

Figure 1: Static Load Tests

ClibPDF - www.fastio.com

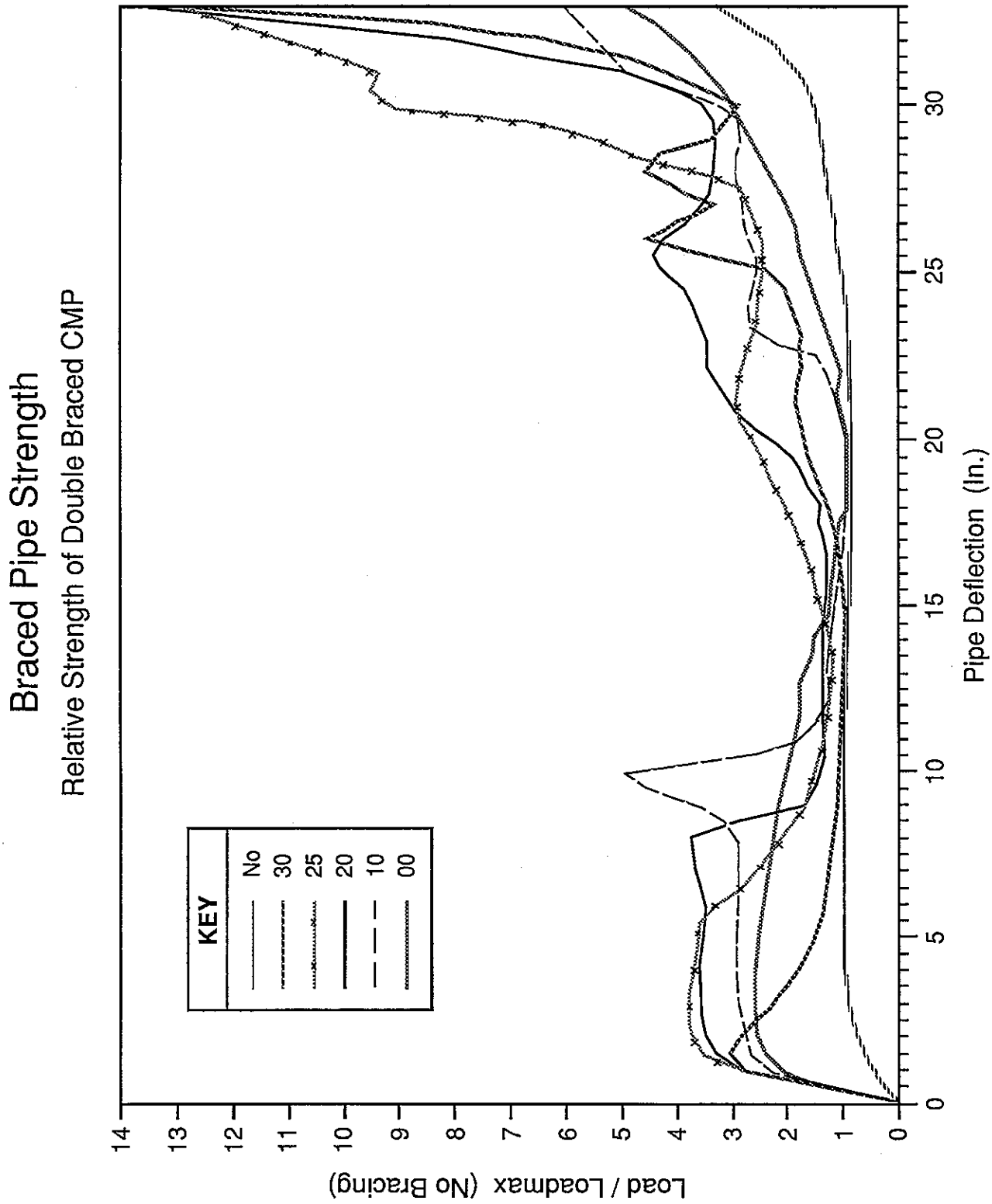

Figure 1a - Static Load Test Results

ClibPDF - www.fastio.com

The primary purpose of the static tests was to gather data for use in designing a terminal. The data were used to model the energy absorbing ability of various hypothetical terminals. To facilitate the modeling process, a computer program was written which used the data from the static tests. The model calculates velocity, acceleration, time and distance every 0.01 m (1/2 inch) of crush. It also calculates the average acceleration from t=0 to present every 0.30 m (1 ft), the occupant impact velocity, the time and distance at which occupant impact occurs, the ride down acceleration, and the 50 ms average acceleration. The time period for the ride down and 50 ms acceleration are also given.

Based on the findings of the above tests and consultation with engineers from Caltrans' Division of Structures, it was decided to use a combination of 12, 14, and 16 ga. CSP with 6.35 cm (1/4 inch) wire rope for cross-bracing. The crossbracing was placed halfway up the CSP, 0.53 m (21 inches) above ground at a 20° angle from zenith (see appendix E for further details).

5.1.2 *Test Facilities*

The two impact tests were conducted at the Caltrans Dynamic Test Facility in West Sacramento, California. The tests were performed on a large flat asphalt concrete surface. The test barrier was placed on concrete pads in the pavement. There were no obstructions nearby except for a simulated bridge deck downstream from the barrier with no rail attached and a trench on the far side.

5.1.3 *Test Barrier Design*

The basic concept and the sizing of CSP braced tubes was done by the Caltrans Division of New Technology Materials, and Research (DNTM&R) (see Appendix E for the complete set of drawings). The Division of Structures designed and drew the details for the two test barriers

ClibPDF - www.fastio.com

with input from DNTM&R and the Division of Traffic Operations. A computer model was used to design the actual breakaway terminal by simulating the energy absorbing characteristics for head-on impacts. The thrie beam terminal design involves a single row of nine 0.91-m (36-inch) diameter corrugated steel pipes of various wall thicknesses. Corrugated steel pipes act as energy absorbing elements during impact. 1.83 m (6-foot) long thrie beam sections are tied to the CSP on the traffic side of the barrier. The thrie beam segments slide forward and telescope during frontal impacts. In side impacts, they act like a longitudinal barrier. The front of the CSP row is surrounded by a 180° bent thrie beam segment. The two designs differ only in the lateral restraint method.

In the first test, 491, the CSP sections were bolted together at the top. Directly below at the bottom of the adjoining pipe sections, guide plates were bolted to the pipe walls. The guide plates had "notches" that fit over the top flange of a wide flange steel beam bolted to the concrete slab base. The steel beam was located along the longitudinal centerline of the terminal, directly under the center of the CSP sections. Hence, as the pipes were crushed in a frontal impact, the notched brackets guided the crushing pipes straight back along the steel beam. To add stability to the terminal in side impacts, the CSP sections were anchored on each side at their bottom edges with a chain going from the pipes to steel bar hooks embedded in the concrete slab. The chains were to resist overturning of the pipes in side impacts, but would slide off the steel bar hooks in head on impacts. The barrier used for test 492 was laterally restrained with a 0.02-m (3/4-inch) diameter steel cable running through eye bolts attached to either side of the individual barrels. The cable was anchored at the upstream end of the barrier to the concrete using 0.15-m (6-inch) diameter steel pipe embedded in the concrete foundation and, in turn, filled with concrete. On the downstream end, the cable was bolted onto an M6 I beam, embedded in 0.69 m (27 inches) of concrete using a stud end fitting on the cable. See Appendix E for a complete set of drawings for the terminals.

ClibPDF - www.fastio.com

5.1.4 *Test Barrier Construction*

The test barrier used for test 491 had an overall length of 24.7 m (81.2 feet). It was installed by a private contractor. The minimum length for test barriers is 22.9 m (75 feet) per NCHRP Report 230 (5). The terminal section had a length of 10.5 m (34.5 feet). The finished barrier is shown in Figure 2. The barrier was constructed in accordance with the Caltrans Standard Specifications (6). The barrier used for test 492 had a length of 24.5 m (80.4 feet), with the terminal section having a length of 11.2 m (36.7 feet). Figure 3 shows the barrier used for test 492.

ClibPDF - www.fastio.com

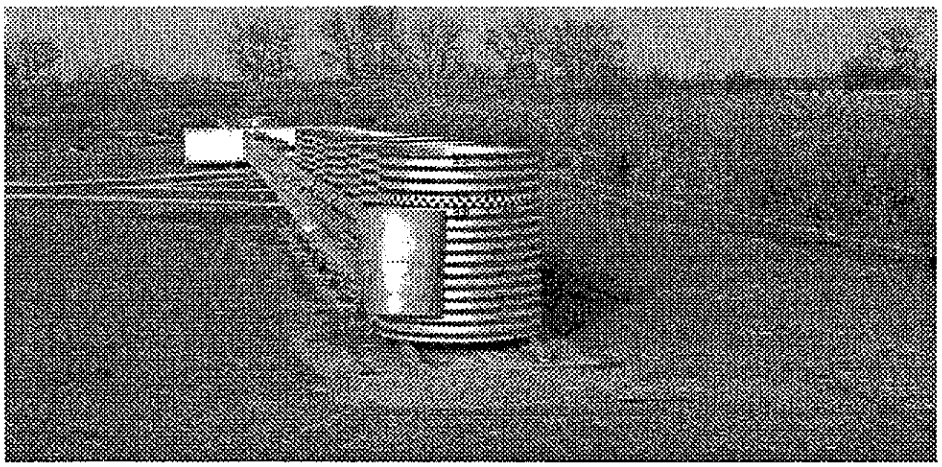

Terminal With Chain/Rail Anchors

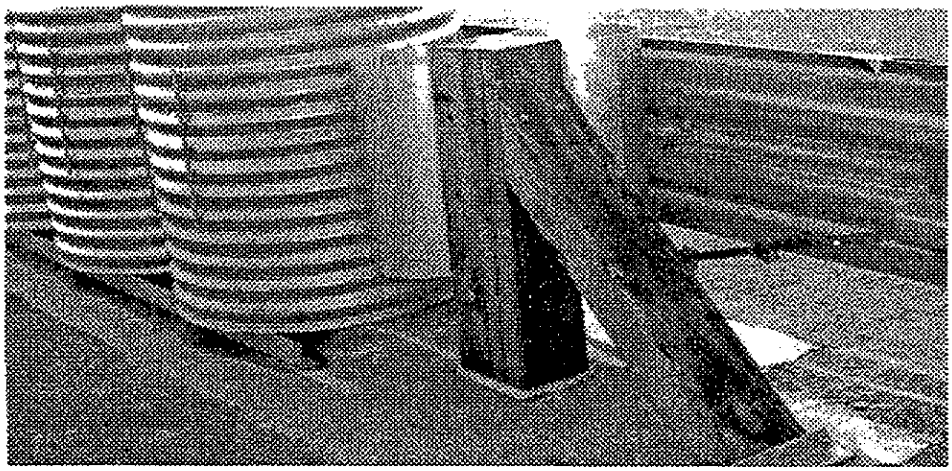

Wood Posts Used as Backup Structure

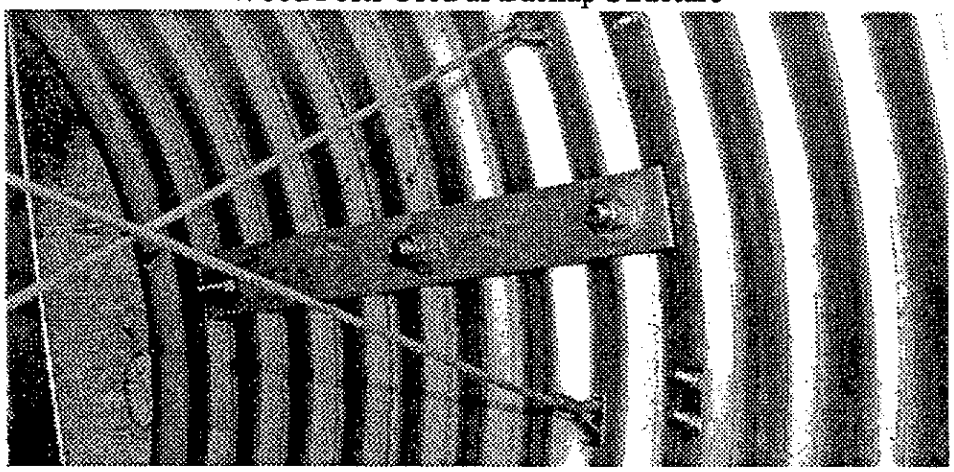

Steel Cable Braces & CSP Connection

Figure 2: Barrier Used In Test 491

ClibPDF - www.fastio.com

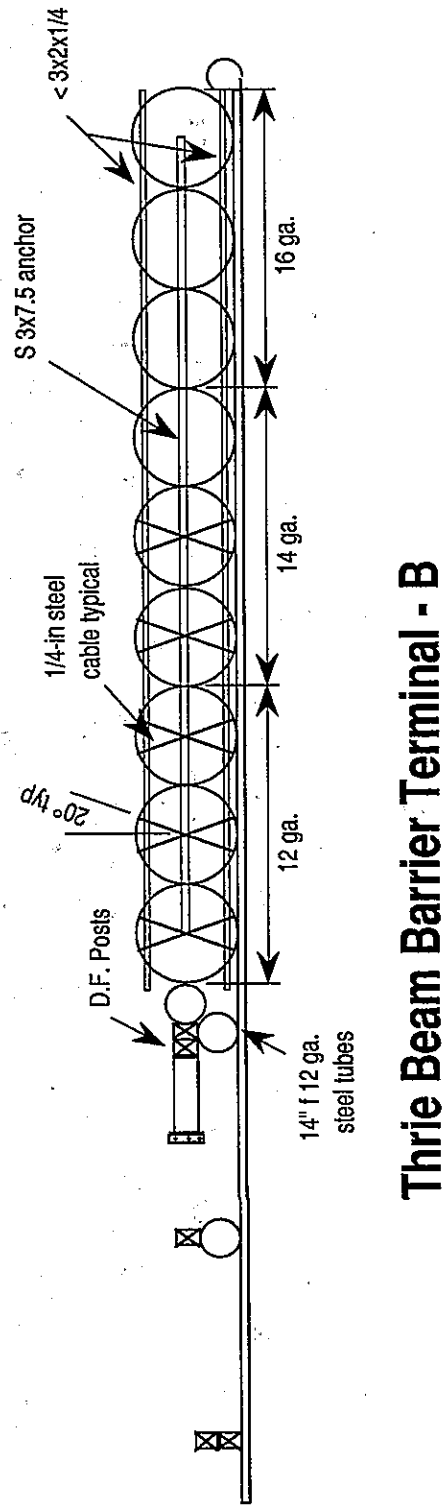

Figure 2: Barrier Used in Test 491

ClibPDF - www.fastio.com

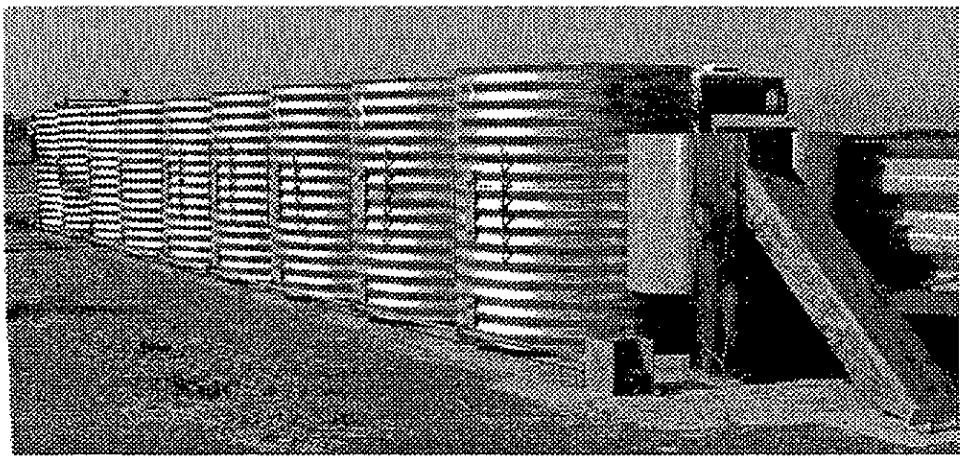

Terminal With Cable Anchors

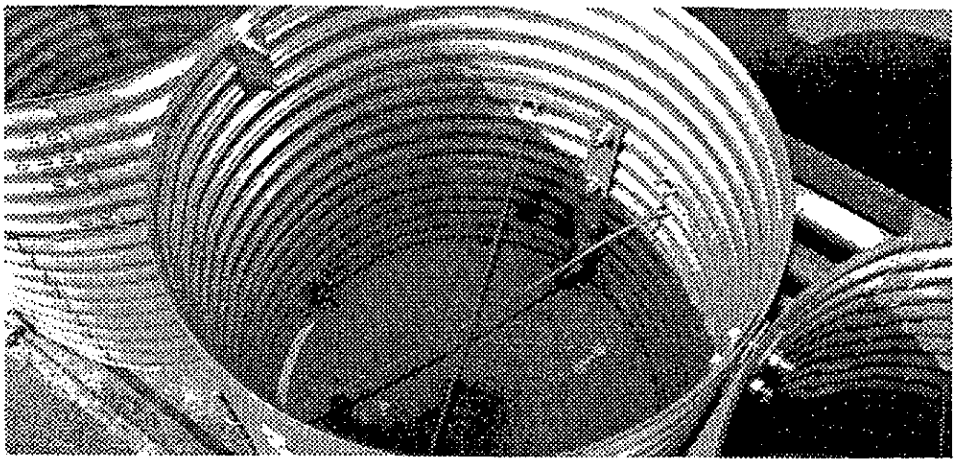

Steel Cable Braces & CSP Connection

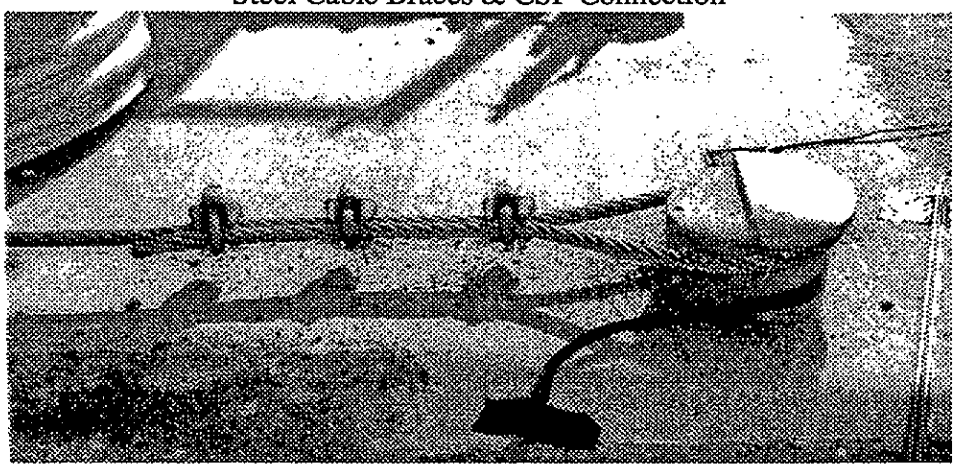

Cable Anchor

Figure 3: Barrier Used In Test 492

ClibPDF - www.fastio.com

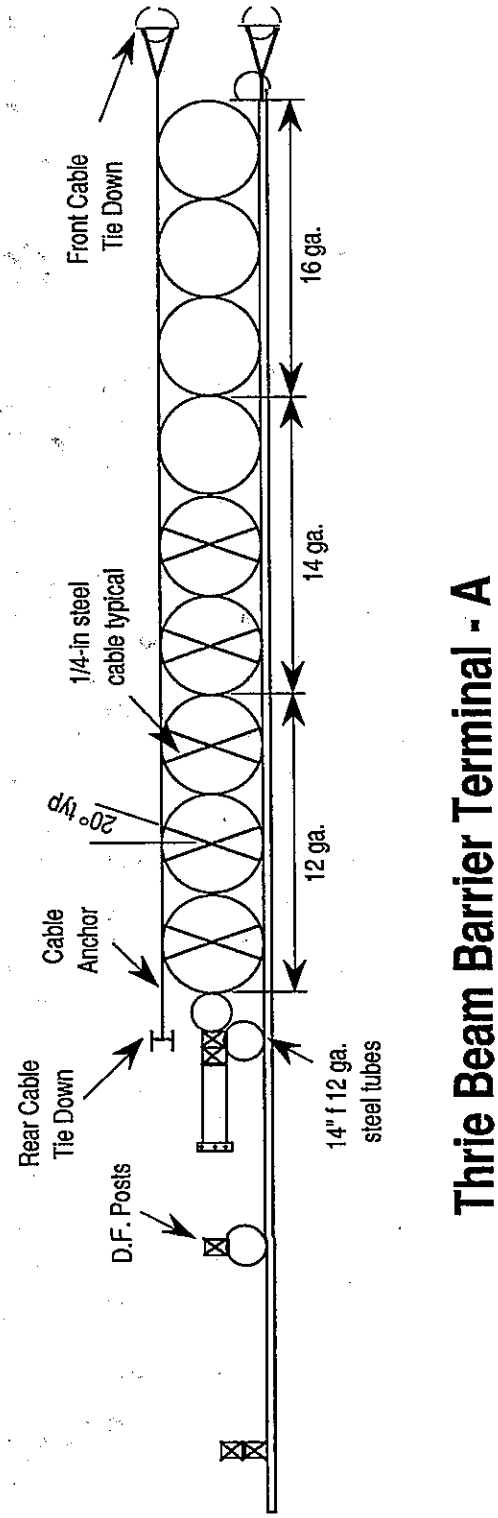

Figure 3: Barrier Used In Test 492

ClibPDF - www.fastio.com

No problems were encountered during the construction of the barriers. Both barrier designs were fairly modular and simple to assemble. (Note: A standard soil pit was constructed for use with the original design concepts, but was not needed for the braced tube terminal designs. The soil pit was used for other crash test research projects).

5.1.5 Test Vehicles

The test vehicles complied with NCHRP Report 230 (5). For both tests, the vehicles were in good condition and free of major body damage and missing structural parts. All the equipment on the vehicles was standard. The vehicles had front mounted engines, rear wheel drive, and automatic transmissions. The vehicle types used in the tests and the vehicle weights are shown in Table 2.

Test No.	Test Vehicle	Total Test Inertial Weight [kg (lb)]
491	86 Chevy Pickup Truck	2077 (4580)
492	87 Chevy Pickup Truck	1928 (4250)

Table 2: Test Vehicle Information
(Key Vehicle Dimensions are Shown in Appendix A)

The vehicles were self-powered; a speed control device maintained the desired impact speed once it was reached (test 491 only). Remote braking was possible after impact. Guidance of the vehicles was achieved with an anchored rail connected to a guide bracket on the right front wheel of the vehicles. No constraints were put on the steering wheel. A short distance before the point of impact, the vehicle was released from the guidance rail and the ignition was turned off. A description of the test vehicle equipment and guidance system is contained in Appendix A.

ClibPDF - www.fastio.com

For test 492, the impact was on the right (passenger) side of the vehicle.

5.1.6 Data Acquisition Systems

The impact phase of each crash test was recorded with several high speed movie cameras, one normal speed movie camera, one black and white sequence camera and one color slide sequence camera. The test vehicles and test barrier were photographed before and after impact with a normal speed movie camera, a black and white still camera and a color slide camera. A film report of this project was assembled using edited portions of the movie coverage.

Three accelerometers were attached to the floor of the vehicle near the center of gravity to measure motion in the longitudinal, lateral and vertical directions. Rate gyro transducers were also placed at this location to measure the pitch, roll and yaw of the vehicle. The accelerometer data were used in calculating the occupant impact velocity.

A Pacific Instruments Model 5600 digital transient data recorder (TDR) was used for recording transducer data. The Model 5600 is a 32 channel portable data recorder for field applications and it was mounted in the vehicle. The TDR digitized and recorded transducer data at a sample rate of 12.5 KHz per channel. The digitized data were transferred to, and analyzed by a personal computer. The recorded and reduced data are presented in Appendix C.

Test dummies were not used in these tests.

Appendices B and C contain a detailed description of the photographic and electronic equipment, the camera layout, data collection and reduction techniques, and accelerometer records.

ClibPDF - www.fastio.com

5.2 TEST RESULTS

The records of accelerometer data are contained in Appendix C and a film report showing the crash tests is available for viewing.

5.2.1 Test 491

The planned conditions were 2040 kg (4500 lb) at 97 km/h (60 mph) and 0° on the nose of the device. The actual conditions were 2077 kg (4580 lb) at 90 km/h (55.9 mph) and 0°. The data summary sheet and the photos taken before and after impact are shown in Figures 4-6.

ClibPDF - www.fastio.com

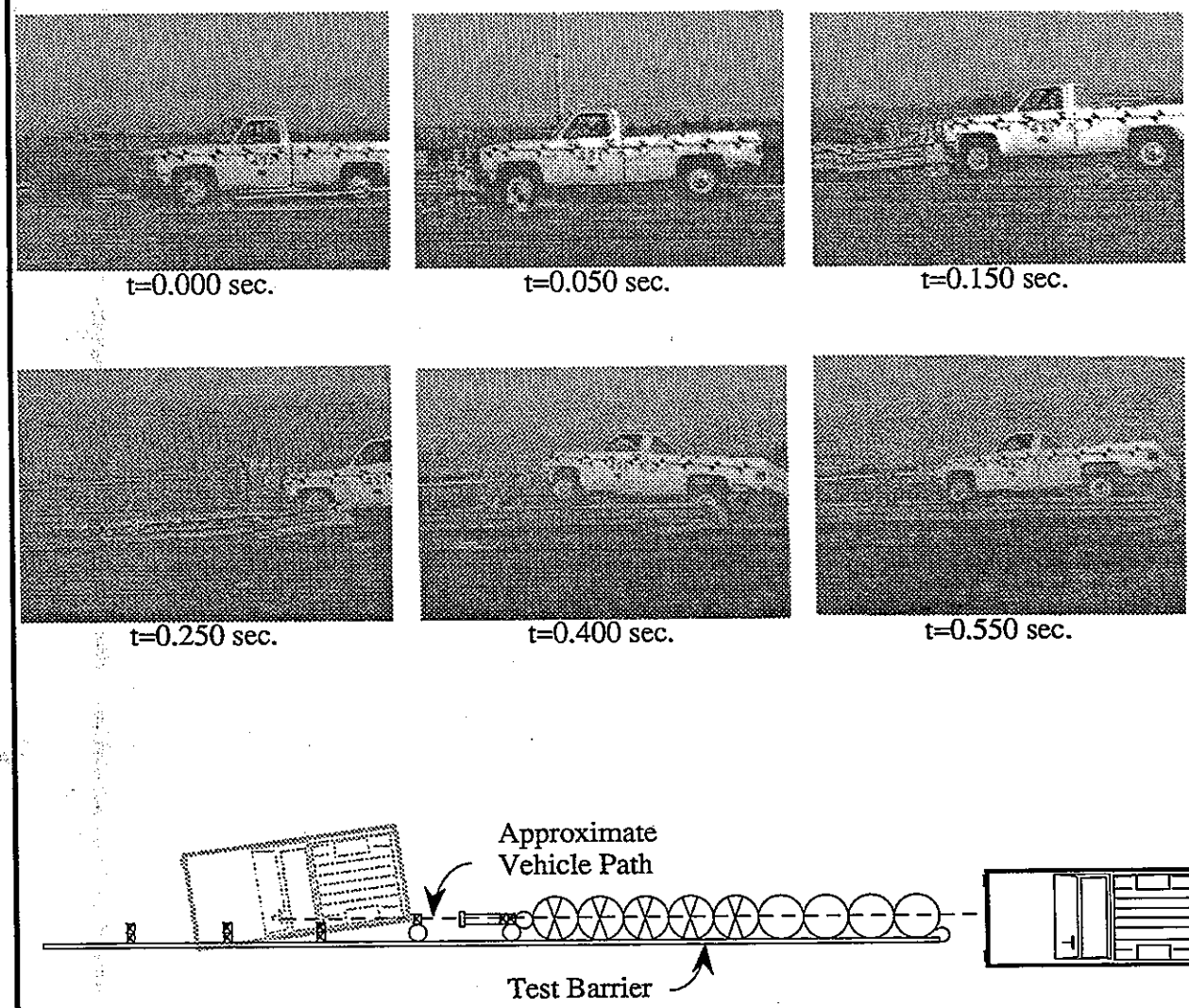

Test Barrier:

Type:	Thrie Beam Terminal - B
Overall Length:	24.7 m (81.2 feet)
Terminal Length:	10.5 m (34.5 feet)
Test Date:	1/29/92

Test Vehicle:

Model:	1986 Chevy Pickup Truck
Inertial Mass:	2077 kg (4580 lb)
Impact Velocity:	90 km/h (55.9 mph)
Impact/Exit Angle:	0° / 0°

Test Data:

Occupant Impact Velocity:	5.7 m/s long. / -1.3 m/s lat.
Ridedown Acceleration:	-7.2 g's long. / 2.6 g's lat.
Max. 50 ms Avg. Accel.:	-4.3 g's long. / 1.3 g's lat.
TAD/VDI:	FD2 / 12FDEW1
Max. Roll, Pitch & Yaw:	+5.3° / +13.4° / +8.2°

Figure 4: Test 491 Data Summary Sheet

ClibPDF - www.fastio.com

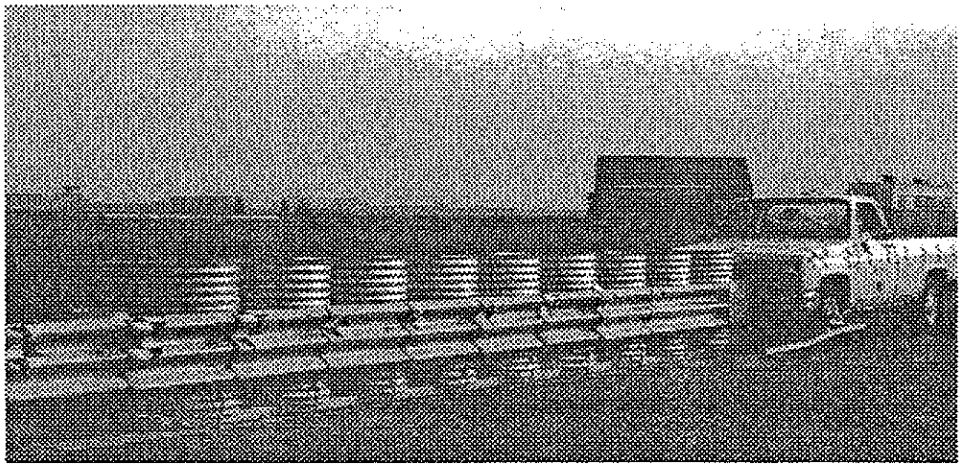

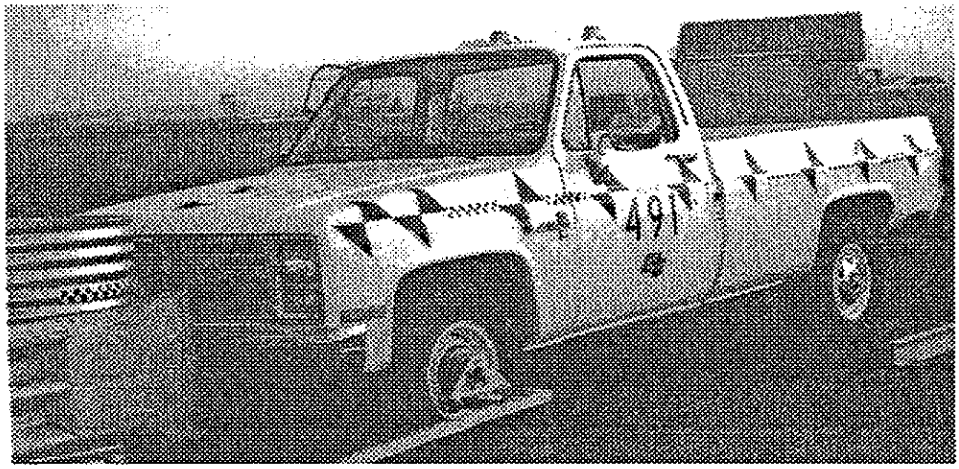

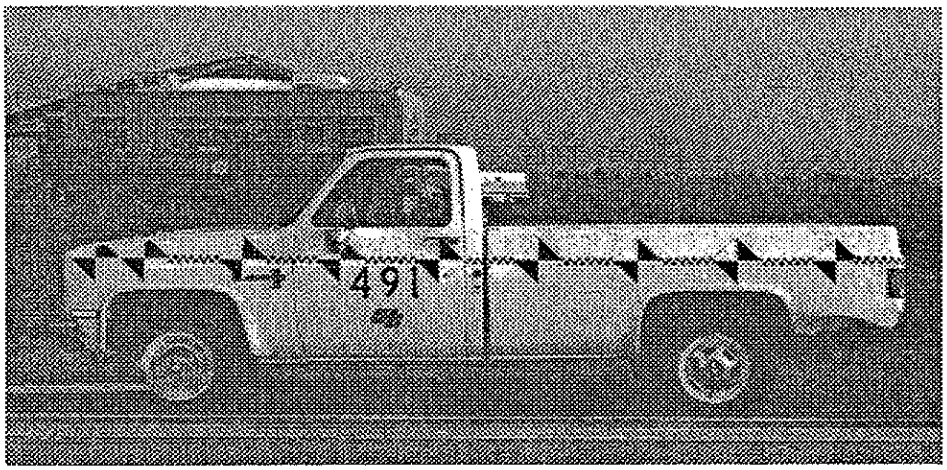

Figure 5: Test 491 Pre-Impact Views of Terminal and Test Vehicle

ClibPDF - www.fastio.com

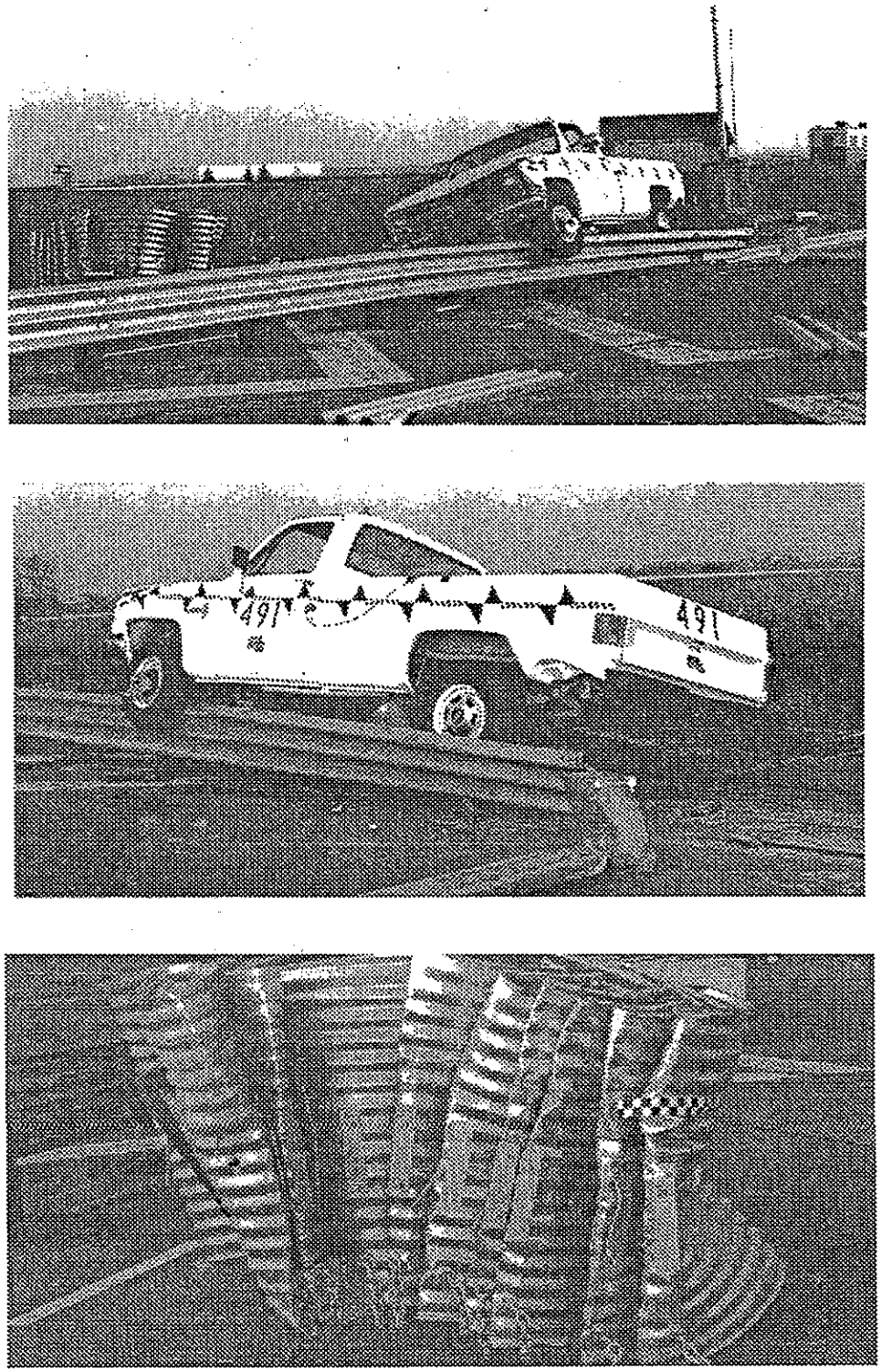

Figure 6: Test 491 Post-Impact Views of Terminal and Test Vehicle

ClibPDF - www.fastio.com

5.2.1.1 Impact Description - 491

The test vehicle impacted the barrier at 0 degree impact angle and at a speed of 90 km/h (55.9 mph). Close examination of the high speed movie films indicated that the center line of the vehicle impacted the center of the end terminal. The vehicle remained in contact with the attenuator during the entire stopping sequence. The vehicle crushed all nine barrels, broke the first backup post and climbed over the thrie beam barrier. It came to rest 10.73 m (35.2 feet) downstream of the impact point with the front bumper 1.04 m (3.4 feet) above ground. The final position of the vehicle was on top of posts 3, 4, and 5.

During impact, the truck experienced a maximum roll of +5.3 degrees (towards the barrier; see Figure C1 for sign convention), a maximum pitch of +13.4 degrees (nose down), and a maximum yaw of +8.2 degrees (away from barrier). Occupant impact velocity was 5.7 m/s (18.6 fps) in the longitudinal direction and -1.3 m/s (-4.4 fps) in the lateral direction. The ridedown acceleration was -7.2 g's longitudinally and 2.6 g's laterally. The maximum 50 ms average accelerations were -4.3 g's in the longitudinal direction and 1.3 g's in the lateral direction.

5.2.1.2 Vehicle Damage - 491

The test vehicle was moderately damaged after the impact. The contact pattern was initiated at the center of the bumper which was bent during the impact. The radiator was intact and the engine unmoved, however, coolant was leaking out of the radiator. The hood remained closed and could be opened in spite of some crinkling of the sheet metal. The left front fender was crushed. The left front door was scraped, jammed and could not be opened. The tires and wheels were undamaged, the steering system was working and the vehicle could have been driven away was it not for the leaking coolant. There was no intrusion of vehicle or barrier parts

ClibPDF - www.fastio.com

into the passenger compartment during impact.

5.2.1.3 Barrier Damage - 491

The barrier was severely damaged during impact. Tubes 1 through 9 were all almost completely crushed. Posts 1 and 2 were sheared off at the base. The thrie beam panels flew off as far as 3.44 m (11.3 feet) downstream from the downstream end of the barrier. The crushed barrels remained connected together, and they landed 22.75 feet from the downstream end of the barrier. Figure 6 shows the post-impact photographs.

5.2.2 Test 492

The planned test conditions were 2040 kg (4500 lb) at 97 km/h (60 mph) and 20° into the side of the device. The actual conditions were 1928 kg (4250 lb) at 95 km/h (59.1 mph) and 20°. The data summary sheet and the photos taken before and after impact are shown in Figures 7-9.

ClibPDF - www.fastio.com

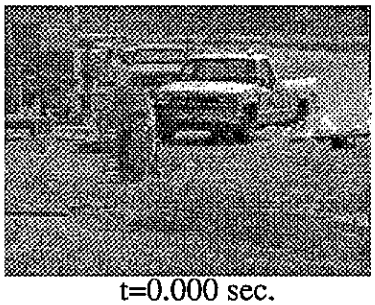
t=0.000 sec.

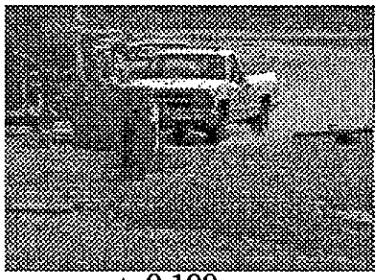
t=0.100 sec.

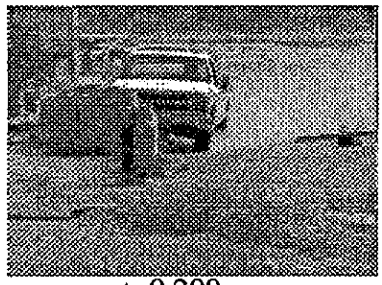
t=0.200 sec.

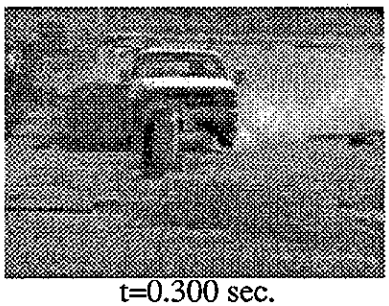
t=0.300 sec.

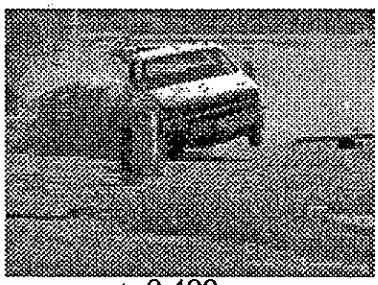
t=0.400 sec.

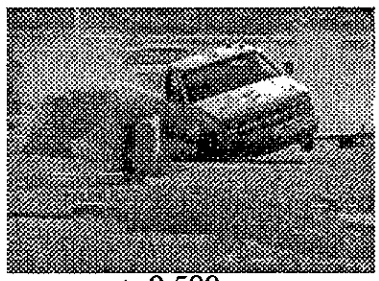
t=0.500 sec.

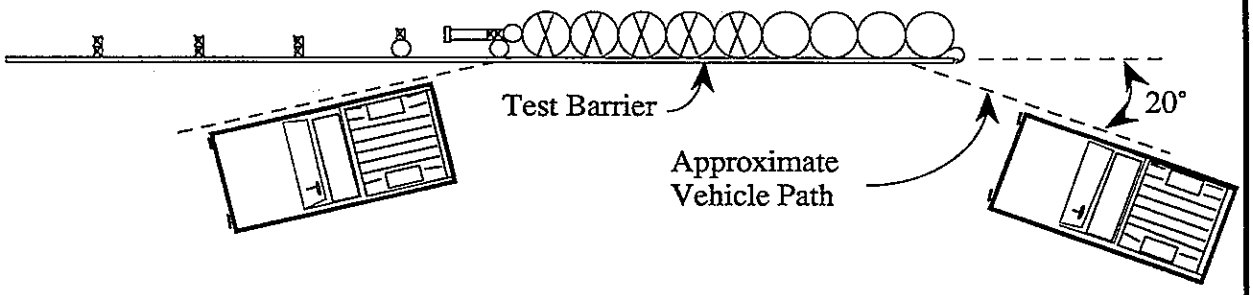

Test Barrier:

Type:	Thrie Beam Terminal - A
Overall Length:	24.5 m (80.4 feet)
Terminal Length:	11.2 m (36.7 feet)
Test Date:	9/16/92

Test Vehicle:

Model:	1987 Chevy Pickup Truck
Inertial Mass:	1928 kg (4250 lb)
Impact Velocity:	95 km/h (59.1 mph)
Exit Velocity:	52.6 km/h (32.7 mph)
Impact/Exit Angle:	20° / n/a

Test Data:

Occupant Impact Velocity:	5.8 m/s long. / -7.3 m/s lat.
Ridedown Acceleration:	-2.9 g's long. / 13.4 g's lat.
Max. 50 ms Avg. Accel.:	-5.5 g's long. / 10.5 g's lat.
TAD/VDI:	FR4 / 02RSEY7
Max. Roll, Pitch & Yaw:	+17.3° / -14.7° / +21.1°

Figure 7: Test 492 Data Summary Sheet

ClibPDF - www.fastio.com

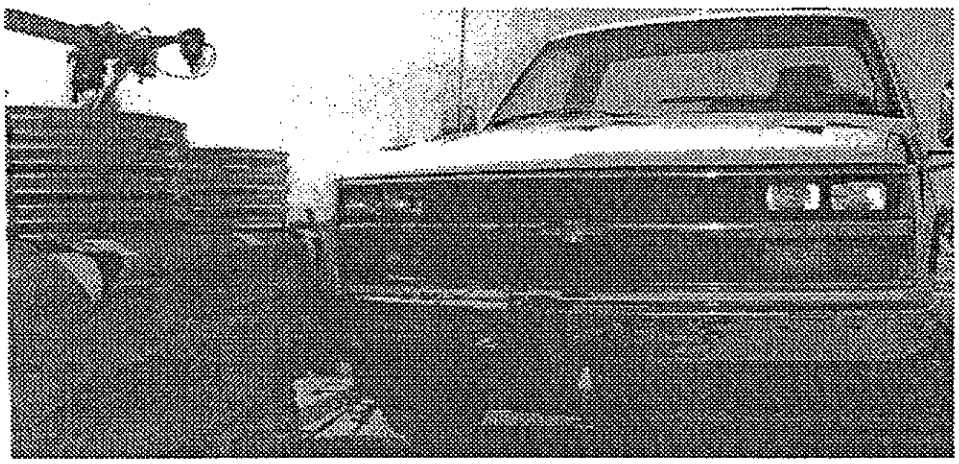

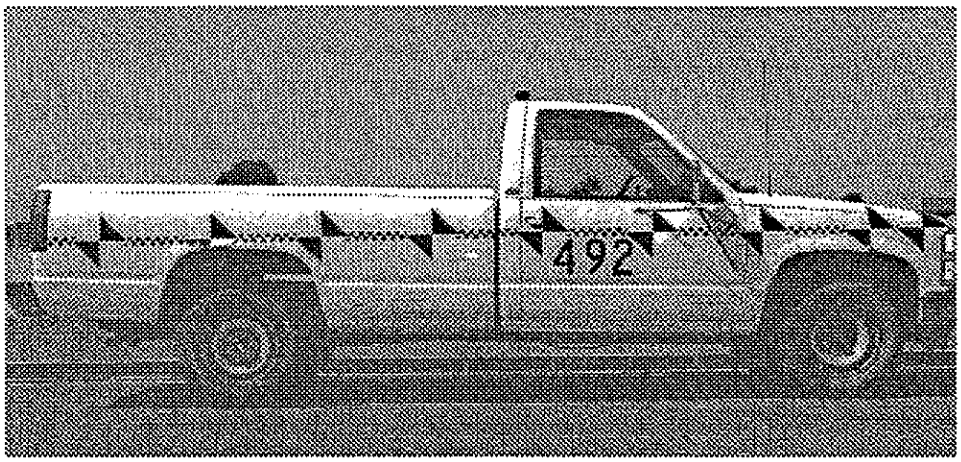

Figure 8: Test 492 Pre-Impact Views of Test Vehicle

ClibPDF - www.fastio.com

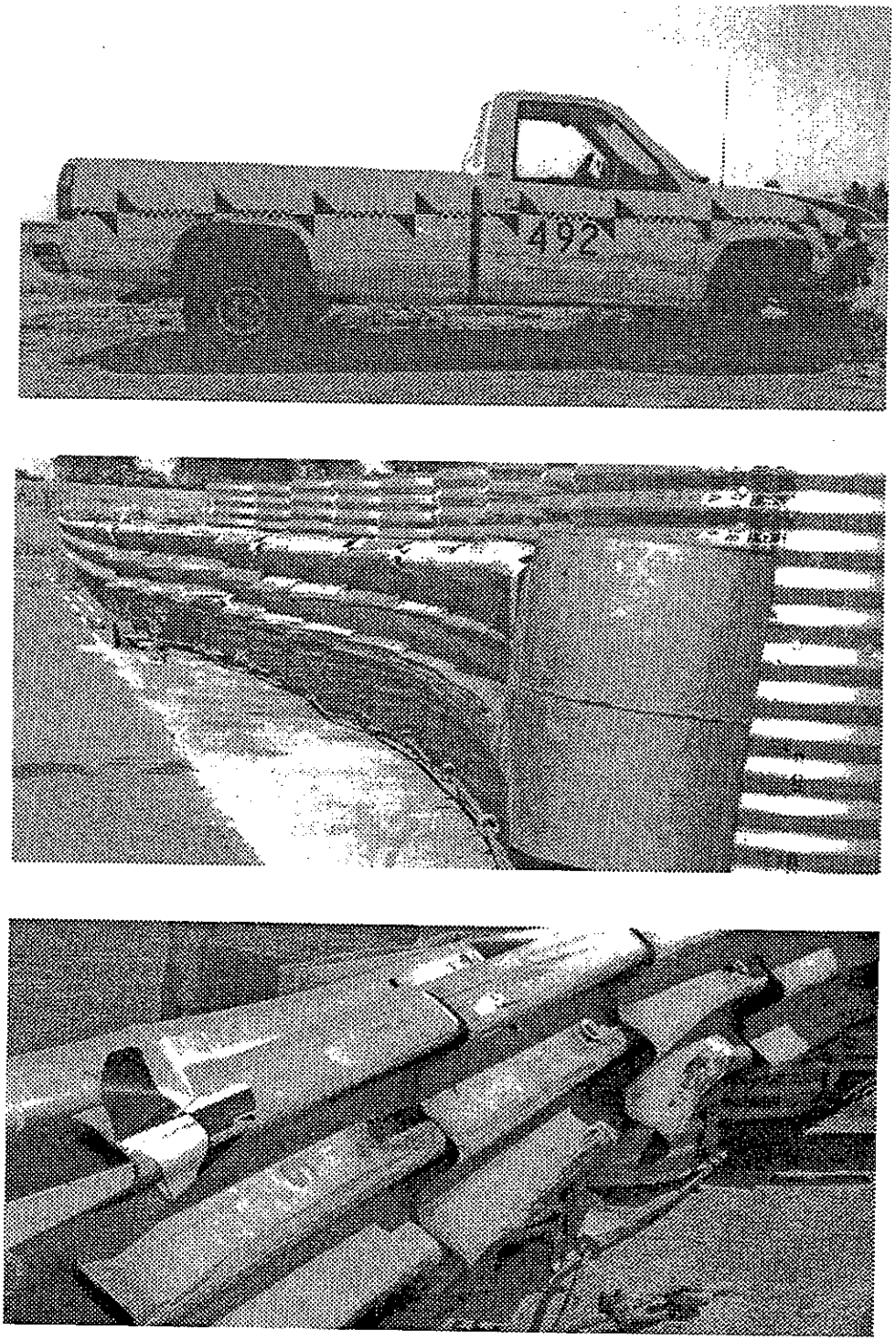

Figure 9: Test 492 Post-Impact Views of Barrier and Test Vehicle

ClibPDF - www.fastio.com

5.2.2.1 *Impact Description - 492*

The test vehicle impacted the barrier at a 20 degree angle and at a speed of 95 km/h (59.1 mph). Close examination of the high speed movie films indicated that the right front corner of the vehicle impacted the barrier at the desired impact point, between tubes 1 and 2. The vehicle remained in contact with the attenuator for the entire length of the terminal.

Upon impact, the right front of the vehicle pushed all nine tubes laterally as some redirection of the vehicle occurred. As the tubes displaced sideways, the steel cable maintained good anchorage of the cylinders and prevented excessive displacement. The tubes generally maintained their shapes, and the vehicle exited the barrier system with an approximate speed of 52.6 km/hr (32.7 mph). The exit angle could not be determined because of lack of camera footage. The right front wheel of the vehicle snagged on the I-beam used to anchor the barrels and was severely damaged. Remote brakes were applied after the vehicle was completely redirected and lost contact with the barrier. The vehicle came to rest downstream from the end of the barrier and in front of it.

During redirection, the vehicle experienced a maximum roll of +17.3 degrees (towards the barrier), a maximum pitch of -14.7 degrees (nose up), and a maximum yaw of +21.1 degrees (towards the barrier). Occupant impact velocity was 5.8 m/s (19.1 fps) longitudinally and -7.3 m/s (-23.9 fps) laterally. The ridedown acceleration was -2.9 g's longitudinally and 13.4 g's laterally. The maximum 50 ms average accelerations were -5.5 g's in the longitudinal direction and 10.5 g's in the lateral direction.

ClibPDF - www.fastio.com

5.2.2.2 *Vehicle Damage - 492*

The test vehicle was severely damaged after the impact. The contact pattern initiated on the right side of the vehicle resulted in the sheet metal on the right side of the body being crushed. The right side of the bumper was crushed and bent back under the vehicle. The grill and headlight on the right side were broken. The hood remained closed and undamaged, but it was pushed sideways about 0.01 m (1/2 inch). The radiator was intact and the engine did not move after the impact. All of the right side of the vehicle was crinkled and crushed due to impact. The right door was jammed shut and could not be opened. The left front tire and wheel were intact, while the right front tire was flat and the wheel was badly bent under the vehicle, restricting movement. The left rear wheel's movement was also restricted because it was bent backwards and pushed up under the vehicle while the right rear tire was flat, but the wheel was intact. The steering system was impaired due to the impact and the vehicle was not in a drivable condition. There was no intrusion of vehicle or barrier parts into the passenger compartment during impact.

5.2.2.3 *Barrier Damage - 492*

The barrier system redirected the vehicle with some damage. All nine tubes were bent; most of the damage to the tubes was at the bottom where the restraining cable anchored the tubes through eye-bolts. The cross braces and the thrie beam panels on the side prevented substantial crushing of the tubes. The two small tubes in the back which connected the CSP's to the wood posts were crushed, and the anchor cable slipped through one of the cable clips at the upstream end of the barrier. Figure 9 shows the post-impact photographs for this test.

ClibPDF - www.fastio.com

5.3 DISCUSSION OF TEST RESULTS

5.3.1 General Safety Evaluation Guidelines - NCHRP Report 230

Three evaluation factors were used in judging the impact test performance of the test barrier, as recommended by NCHRP Report 230 (5). These factors are: (1) structural adequacy, (2) occupant risk, and (3) vehicle trajectory. All three of the above categories were used to judge the performance of the barrier in tests 491 and 492.

5.3.2 Structural Adequacy

The structural adequacy was evaluated by comparison of the test results with the following criteria from Table 6 of NCHRP Report 230 (5).

> "C. Acceptable test article performance may be by redirection, controlled penetration, or controlled stopping of the vehicle.
>
> D. Detached elements, fragments or other debris from the test article shall not penetrate or show potential for penetrating the passenger compartment or present undue hazard to other traffic."

Test 491 did not meet either of the above criteria. The barrier did not bring the vehicle to a complete stop. As a result, the vehicle crushed all nine CSP's and climbed over the thrie beam guardrail, hence criterion C was not met. Debris from the barrier, including thrie beam panels and wood posts were scattered over an area extending as far as 4.02 m (13.2 feet) from the face of the barrier. Even with a ten foot shoulder, this means that the debris would have landed into adjacent traffic lanes presenting an unnecessary hazard, hence test 491 did not meet criterion D.

ClibPDF - www.fastio.com

On the other hand, test 492 met both of the above requirements since the vehicle was smoothly redirected away from the barrier and there was hardly any debris around after impact.

5.3.3 Occupant Risk

The occupant risk was evaluated by comparison of test results with the following criteria from Table 6 of NCHRP Report 230 (5).

"E. The vehicle shall remain upright during and after collision although moderate roll, pitching and yawing are acceptable. Integrity of the passenger compartment must be maintained with essentially no deformation or intrusion.

F. Impact velocity of hypothetical front seat passenger against vehicle interior, calculated from vehicle accelerations and 24 in. (0.61 m) forward and 12 in. (0.30 m) lateral displacements, shall be less than:

Occupant Impact Velocity - fps	
Longitudinal	Lateral
$40/F_1$	$30/F_2$

and vehicle highest 10 ms average acclerations subsequent to instant of hypothetical passenger impact should be less than:

Occupant Ridedown Accelerations - g's	
Longitudinal	Lateral
$20/F_3$	$20/F_4$

where F_1, F_2, F_3, and F_4 are appropriate acceptance factors (see Table 8, Chapter 4 for suggested values)."

In both test 491 and 492, the amount of roll, pitch and yaw was moderate. Neither of the two test

ClibPDF - www.fastio.com

cars showed any indication of being close to rollover. There was no deformation or intrusion into the passenger compartment, hence criterion E was met in both tests.

The values of both the longitudinal and the lateral occupant impact velocity for test 491 and 492 were below the NCHRP recommended maximum values.

The second part of Criterion F in NCHRP Report 230 (5) calls for a highest 10 ms average longitudinal and lateral vehicle acceleration of 15 g's after the theoretical occupant/compartment impact occurs. Both test 491 and 492 met this criterion.

It should be noted that none of the above means of evaluating the occupant risk are exact methods of predicting injury levels during impacts. NCHRP Report 230 states that "Whereas the highway engineer is ultimately concerned with safety of the vehicle occupants, the occupant risk criteria should be considered as the guidelines for generally acceptable dynamic performance. These criteria are not valid, however, for use in predicting occupant injury in real or hypothetical accidents". The explanation is given that "relationship between vehicle dynamics and probability of occupant injury and degree of injury sustained is tenuous, because it involves such important but widely varying factors as occupant physiology, size, seating position, restraint, and vehicle interior geometry and padding". However, low occupant impact velocity and ridedown acceleration values indicate relatively safe roadside safety features.

5.3.4 Vehicle Trajectory

The vehicle trajectory was evaluated by comparison of test results with the following criteria from Table 6 of NCHRP Report 230 (5):

"H. After collision, the vehicle trajectory and final stopping position shall intrude a

ClibPDF - www.fastio.com

minimum distance, if at all, into adjacent traffic lanes.

I. In tests where the vehicle is judged to be redirected into or stopped while in adjacent traffic lanes, vehicle speed change during test article collision should be less than 15 mph and the exit angle from the test article should be less than 60% of test impact angle, both measured at time of vehicle loss of contact with test device.

J. Vehicle trajectory behind the test article is acceptable."

Both tests 491 and 492 met criterion H above. Criterion I applies to test 492 only and based on an exit speed of 52.6 km/hr (32.7 mph), the test did not meet this criterion since the change in speed was 23.6 mph. The most likely reason for this speed change was the snagging of the right front wheel on the I-beam anchor. This bent the front wheel and greatly increased the drag force on the vehicle. Regardless of speed change and exit angles, the barrier demonstrated its ability to retain a vehicle under very severe impact conditions. Criterion J was successfully met in both tests.

NCHRP Report 230 (5) stresses that "trajectory evaluation for redirectional type of tests is focused on the vehicle at the time it loses contact with the test article, and the subsequent part of the trajectory is not evaluated".

5.3.5 Comparison With Other Terminal Designs

The concept of this barrier design is similar to the Narrow Connecticut Impact Attenuation System (NCIAS), a proprietary design developed by Jack Carney of Vanderbilt University in co-operation with the Connecticut DOT, and marketed by Syro Steel Company of Girard, OH. The

ClibPDF - www.fastio.com

NCIAS design utilizes eight 0.91-m (36-inch) diameter steel pipes which are 1.22 m (48 inches) high. The cylinders are anchored to a concrete pad. A wire rope is used to provide lateral rigidity during impacts. The system has an anchored back-up structure, hence it can be used in front of any narrow hazard, not just as a thrie beam terminal.

One significant problem with the NCIAS (as well as the tested design) is its repair requirements. After an impact, the crushed steel pipes have to be replaced. This requires some heavy equipment capable of lifting the pipes (aprox. 455 kg or 1000 lb for all nine pipes) and carrying them away. Not only is this equipment not readily available, but the repair operation would require at least one lane closure (maybe 2 lanes in a gore area).

Two other devices which are specifically intended for use as thrie beam barrier terminals are the SENTRE and TREND systems which have been approved for use on California highways. These are both proprietary systems developed by Energy Absorption Systems, Inc. of Chicago, IL. The SENTRE is designed for installation on the end of a W-beam or thrie beam guardrail. The SENTRE unit consists of interlocking, telescoping thrie beam fender panels attached to steel wide flange, slip-base posts, plus sand containers and a ground level redirecting cable. A tension cable is required to anchor the guardrail at the point of connection to the SENTRE. The TREND consists of a series of thrie beam fender panels, support posts with slip bases, and sand filled boxes that help to dissipate the collision energy (very similar to the SENTRE design). An angled redirecting cable directs the nose of the vehicle laterally away from the hard point. The TREND requires a concrete pad and anchor. The system length of 19 feet may be a reasonable solution for shielding the end of a bridge rail or abutment where there is not enough room for a standard bridge approach guardrail. Both the SENTRE and the TREND have many parts. They both requre specific torques on the clamping bolts for the steel post slip bases. This requires a special tool (a torque wrench), and careful tightening of clamping bolts. This adds one extra level of skill to maintenance work beyond merely tightening bolts. These terminal designs were

ClibPDF - www.fastio.com

developed during the time the Caltrans thrie beam terminal was being designed and tested.

ClibPDF - www.fastio.com

6. REFERENCES

1. "Standard Plans", California Department of Transportation, Sacramento, CA, 1989.

2. Parks, D.M. et al, "Vehicular Crash Tests of Four Bullnose Traffic Barrier Designs", California Department of Transportation, June 1976.

3. White, M.C., "The Modular Crash Cushion: Design Data From Static Crush Tests of Steel Drums and Corrugated Steel Pipes", Texas Transportation Institute, Technical Memo 505-17, April 1971.

4. Carney, J.F. III et al, "The Connecticut Impact-Attenuation System", Transportation Research Board, Transportation Research Record 1024, April 1986.

5. "Recommended Procedures for the Safety Performance Evaluation of Highway Appurtenances", Transportation Research Board, National Cooperative Highway Research Program Report 230, March 1981.

6. "Standard Specifications", California Department of Transportation, Sacramento, CA, 1989.

7. Carney, J.F. III et al, "Energy Absorbing Capacities of Braced Metal Tubes", *Int. J. Mech Sci.*, Vol.25, No. 9-10, pp. 649-667, 1983.

8. Carney, J.F. III et al, "Impact Response and Energy Dissipation Characteristics of Stiffened Metallic Tubes",

ClibPDF - www.fastio.com

APPENDICES

A. TEST VEHICLE EQUIPMENT AND RAIL GUIDANCE SYSTEM

The test vehicles were modified as follows for the crash tests:

- The gas tanks on the test vehicles were disconnected from the fuel supply line and drained. Shortly before the test, dry ice was placed in the tanks of the test vehicles as a safety precaution to drive out the gas fumes. A 3.78-L (one-gallon) safety gas tank was installed in the vehicles and connected to the fuel supply line.

- Six 12-volt wet cell motorcycle storage batteries were mounted in the vehicle. Two supplied power to a high-speed camera and lamps located inside the vehicle. Another pair of batteries operated the solenoid-valve braking system and other test equipment in the vehicle. The third pair of batteries powered the PACDAS data acquisition system.

- The gas pedal was linked to a small cylinder with a piston which opened the throttle. The piston was started by a hand thrown switch on the rear fender of the test vehicle. The piston was connected to the same CO_2 tube used for the brake system, but a separate regulator controlled the pressure.

- A speed control device connected between the negative side of the coil and the vehicle battery regulated the speed of the test vehicle based on speedometer cable output. This device was calibrated prior to the test by conducting a series of trial runs through a speed trap composed of two tape switches set a known distance apart and connected to a digital timer. The speed regulator could not be used for

ClibPDF - www.fastio.com

Test 492 because the test vehicle had a digital speedometer, hence it was incompatible with our speed regulator. Trial runs were performed before the test to find the distance required for the vehicle to achieve impact speed based on maximum vehicle acceleration.

- A rail guidance system directed the vehicle into the barrier. The guidance rail, anchored at 25-foot intervals along its path, was used to guide a mechanical arm which was attached to the left front wheel of the vehicle. A rope was used to trigger the release mechanism on the guidance arm, thereby releasing the vehicle from the mechanical guidance before impact.

A microswitch was mounted below the front bumper and connected to the ignition system. A trip plate on the ground near impact triggered the switch when the car passed over it, thus opening the ignition circuit and cutting the vehicle engine before impact.

- A solenoid-valve actuated CO_2 system controlled remote braking after impact or emergency braking any other time. Part of this system was a cylinder with a piston which was attached to the brake pedal. The pressure operating the piston was set during trial runs to stop the test vehicle without locking the wheels. When activated, the brakes were applied in less than 100 milliseconds.

- The remote brakes were controlled at the console trailer. A cable ran from the console trailer to the electronic instrumentation trailer. From there, the remote brake signal was carried on one channel of the tether line which was connected to the test vehicle. Any loss of continuity in these cables would activate the brakes

ClibPDF - www.fastio.com

and cut off the ignition automatically. Also, if the brakes were applied by remote control from the console trailer, the ignition would automatically cut off.

Figures A1 and A2 on the following pages show the vehicle dimensions. Dimensions were measured.

ClibPDF - www.fastio.com

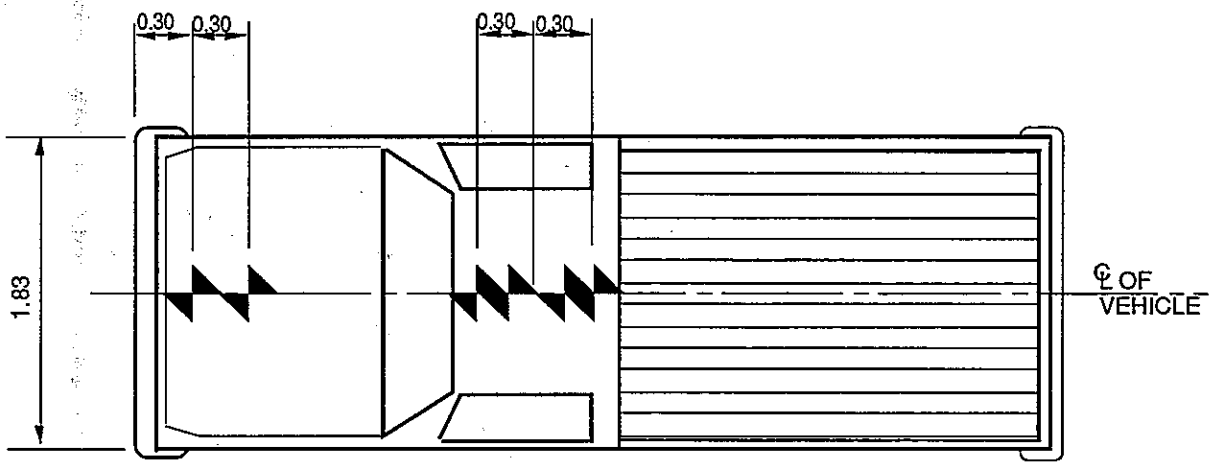

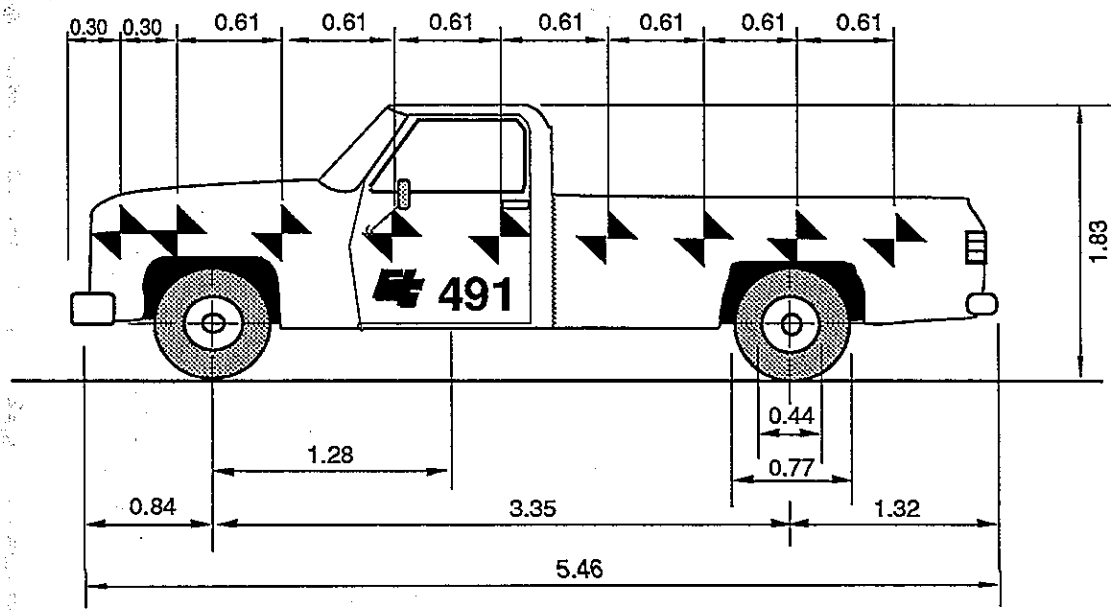

(All dimensions are in meters)

Figure A1: Vehicle Dimensions, Test 491

ClibPDF - www.fastio.com

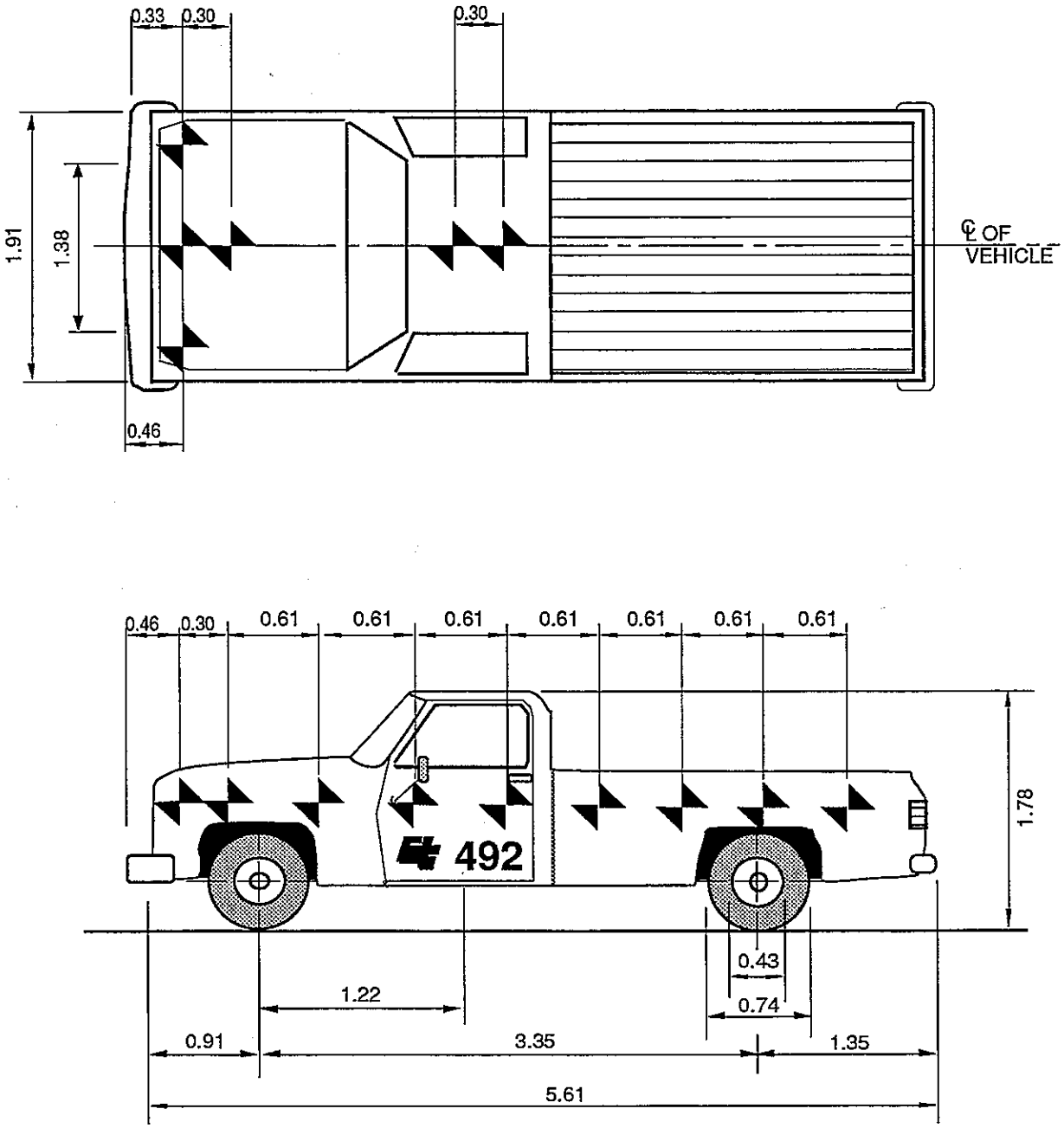

(All dimensions are in meters)

Figure A2: Vehicle Dimensions, Test 492

ClibPDF - www.fastio.com

ClibPDF - www.fastio.com

B. PHOTO - INSTRUMENTATION

Several high-speed movie cameras recorded the impact during the crash test. The types of cameras and their locations are shown in Figure B1.

All of these cameras were mounted on tripods except three cameras that were mounted on a 10.7-m (35-foot) high tower directly over the point of impact on the test barrier.

These cameras were connected by cables to a console trailer near the impact area which contained eight 12-volt batteries. Most of the cameras were turned on remotely from a control panel on the trailer. The test vehicle and test barrier were photographed before and after impact with a normal speed movie camera, a black and white still camera and a color slide camera. A film report of this project has been assembled using edited portions of the movie coverage.

Following are the pretest procedures that were required to enable film data reduction on a Visual Instrumentation Corporation Model 1214A Motion Analysis System:

- Butterfly targets were attached to the top and sides of the test vehicles. The target locations are shown in Figures A1 and A2. The targets established scale factors and horizontal and vertical alignment. The test barrier was targeted with black and white tape also.

- Flashbulbs, mounted on the test vehicle, were electronically flashed to establish (a) initial vehicle to barrier contact, and (b) the application of the vehicle brakes. The impact flashbulbs have a delay of several milliseconds before lighting up.

- Five tape switches, placed at 3.05-m (10-foot) intervals, were attached to the

ClibPDF - www.fastio.com

ground perpendicular to the path of the impacting vehicle near the barrier. Flash bulbs were activated sequentially when the tires of the test vehicle rolled over the tape switches. The flashbulb stand was placed in view of most of the data cameras. The flashing bulbs were used to correlate the cameras with the impact events; and to calculate the impact speed independent of the electronic speed trap. The tape switch layout is shown in Figure B2. All high-speed cameras had timing light generators which exposed red timing pips on the film at a rate of 1000 per second. The pips were used to determine camera frame rates and to establish time-sequence relationships.

ClibPDF - www.fastio.com

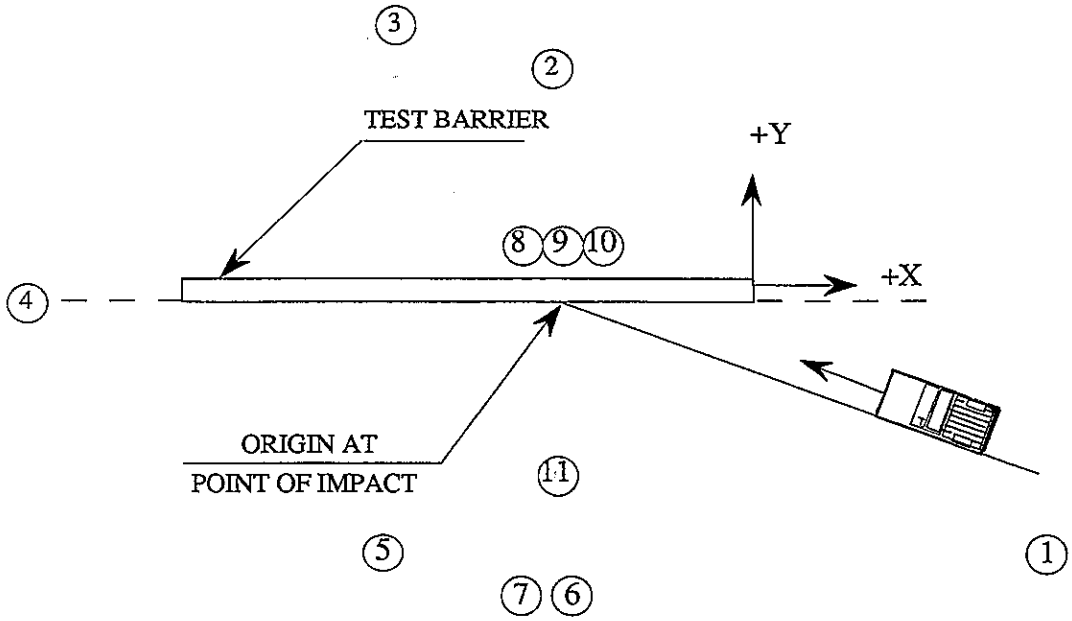

Cam. No.	Film mm	Camera		Coordinates (m)			
			Film Rate	Test 491		Test 492	
		Type	(frames/sec)	X	Y	X	Y
1	16	Redlake - Locam	400	na	na	60.96	na
2	16	Redlake - Locam	400	-4.42	19.93	-15.85	32.31
3	16	Redlake - Locam	400	-23.87	9.66	-41.45	30.48
4	16	Redlake - Locam	400	26.03	0.00	-87.48	0.00
5	16	Redlake - Locam	400	0.00	-14.66	-6.10	-24.69
6	35	Hulcher 35	20	3.57	-19.23	na	na
7	VHS	VHS Video Camera		5.36	-19.23	na	na
8	16	Photosonics	400	-0.30	1.37	-0.30	0.00
9	16	Redlake - Locam	400	0.00	1.37	0.00	0.00
10	16	Photosonics	400	0.30	1.37	0.30	0.00
11	16	Redlake - Locam	400	1.37	-14.90	na	na

Figure B1: Camera Layout

ClibPDF - www.fastio.com

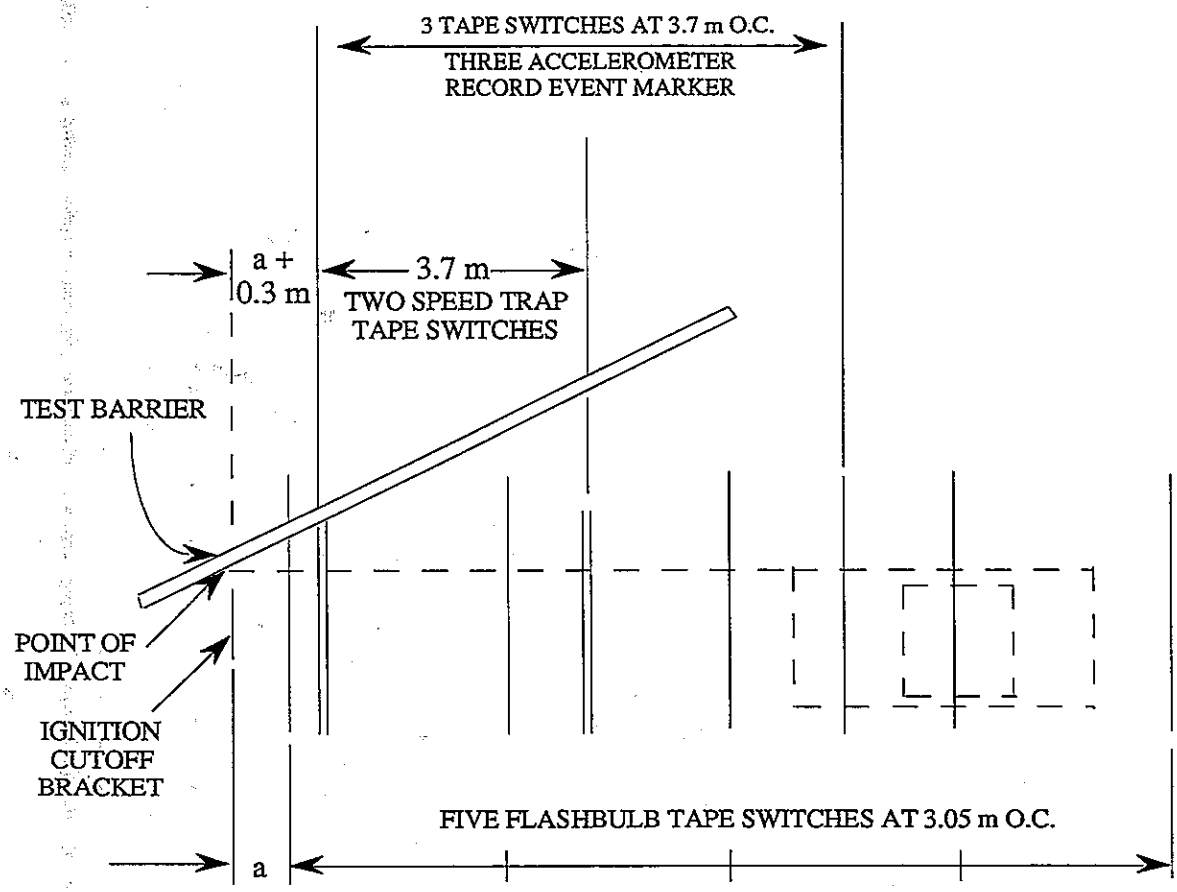

Figure B2: Tape Switch Layout

ClibPDF - www.fastio.com

C. ELECTRONIC INSTRUMENTATION AND DATA

Three unbonded strain gage accelerometers (Statham) measured acceleration in the longitudinal, lateral and vertical directions. They were near the longitudinal and lateral center of gravity of the vehicles. These accelerometers were mounted on a small rectangular steel plate which was bolted to another steel bracket that was welded to the floorboard. Figures A1 and A2 show the location of these accelerometers. Table C1 gives information on the accelerometers and rate gyros used. Figure C1 shows the sign conventions for the vehicle accelerometers.

TYPE	LOCATION	RANGE	ORIENTATION
STATHAM	VEHICLE C.G.	100 G	LONGITUDINAL
STATHAM	VEHICLE C.G.	100 G	LATERAL
STATHAM	VEHICLE C.G.	50 G	VERTICAL
HUMPHREY	VEHICLE C.G.	180 DEG/SEC	ROLL
HUMPHREY	VEHICLE C.G.	90 DEG/SEC	PITCH
HUMPHREY	VEHICLE C.G.	180 DEG/SEC	YAW

Table C1: Accelerometer And Rate Gyro Data

ClibPDF - www.fastio.com

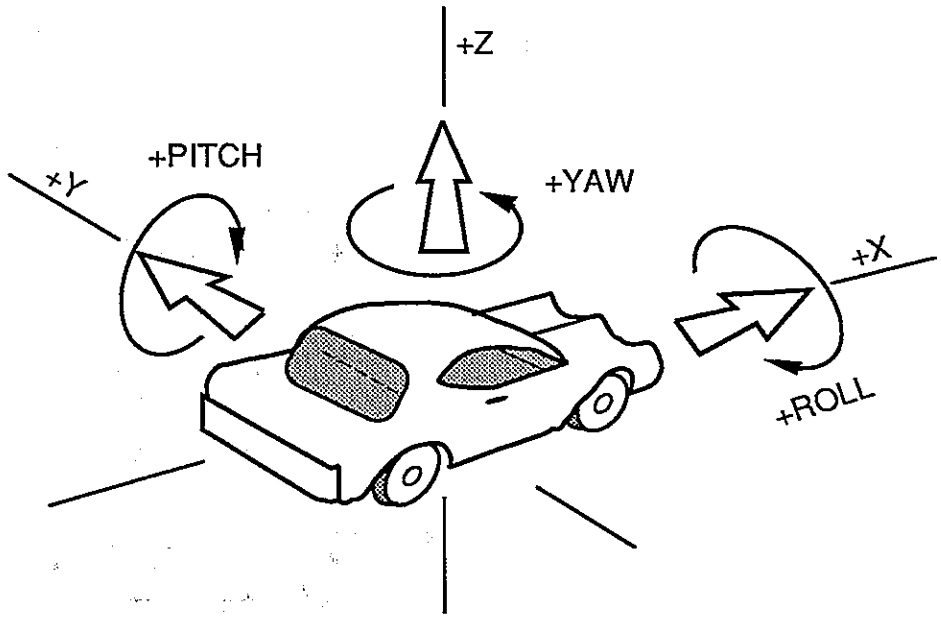

Figure C1: Vehicle Acceleration Sign Convention

Data from the accelerometers in the test vehicle were transmitted through a 304.8-m (1000-foot) Belden number 8776 umbilical cable connecting the vehicle to a 14 channel Hewlett Packard 3924C magnetic tape recording system. This recording system was in an instrumentation trailer at the test control area. The accelerometer data were also recorded on a Pacific Instruments digital data recorder (PACDAS) which was mounted in the vehicle. The PACDAS data were reduced using a microcomputer.

Three pressure-activated tape switches were placed on the ground in front of the test barrier. They were spaced at carefully measured intervals of 3.7 m (12 feet). When the test vehicle tires passed over them, the switches produced sequential impulses or "event blips" which were recorded concurrently with the accelerometer signals on the tape recorder and served as "event markers". These signals were also transmitted back to the PACDAS through the umbilical cable. A tape switch on the front bumper of the vehicle closed at the instant of impact and activated flash bulbs mounted on the vehicle. The closure of the bumper switch also put a "blip" or "event

ClibPDF - www.fastio.com

marker" on the recording tape and PACDAS. A time cycle was recorded continuously on the tape and PACDAS with a frequency of 500 cycles per second. The impact velocity of the vehicle could be determined from the tape switch impulses and timing cycles. Two other tape switches connected to digital readout equipment were placed 3.7 m (12 feet) apart just upstream from the test barrier specifically to determine the impact speed of the test vehicle immediately after the test was completed. The tape switch layouts are shown in Appendix B in Figure B2.

The data curves are shown in Figures C2 through C11 and include the accelerometer and rate gyro records from the vehicle for Tests 491 and 492. They also show the longitudinal velocity and displacement vs. time. These plots were needed to calculate the occupant impact velocity defined in (4). All curves were calculated using the PACDAS.

ClibPDF - www.fastio.com

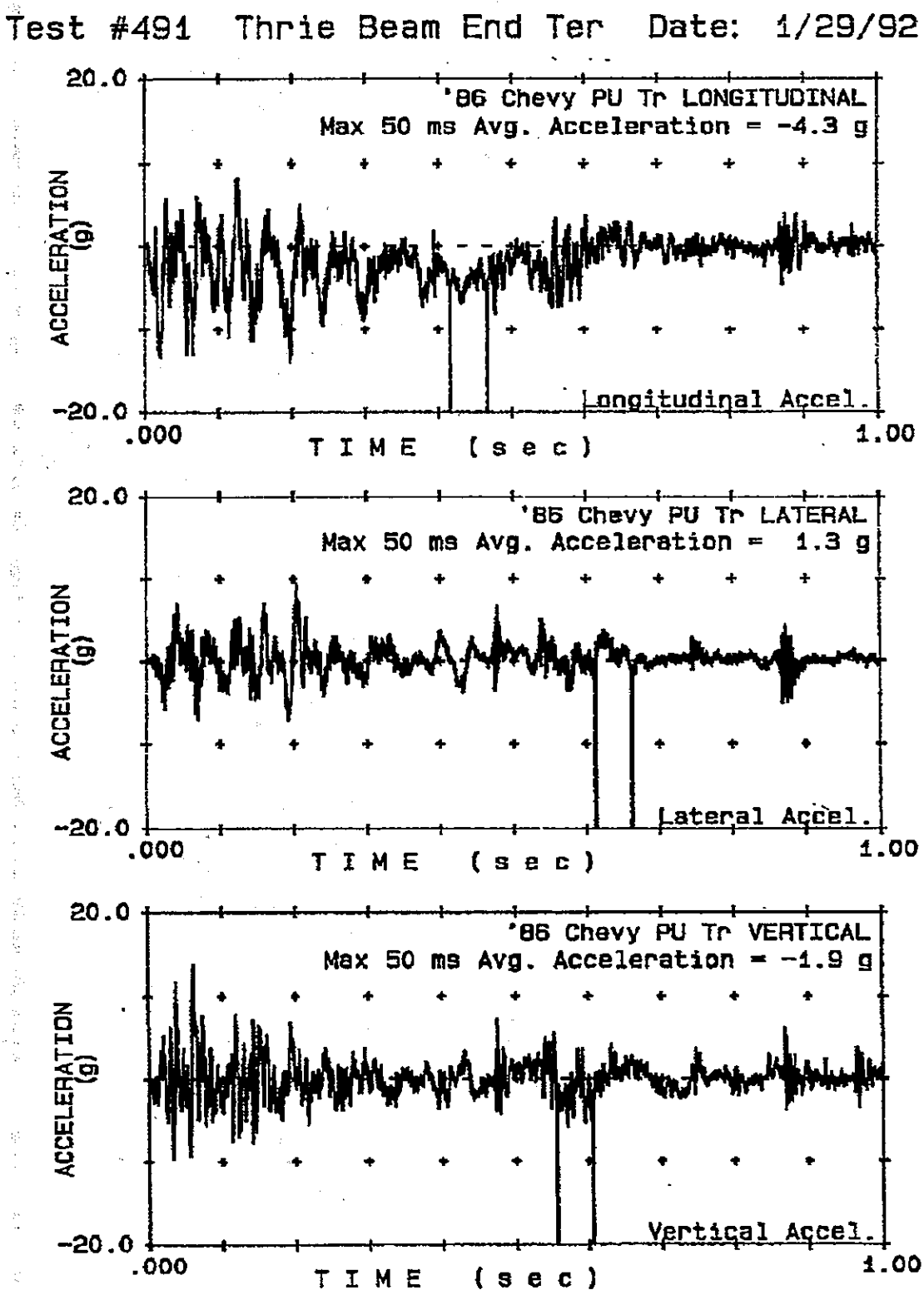

Figure C2: Test 491 - Vehicle Accelerations

ClibPDF - www.fastio.com

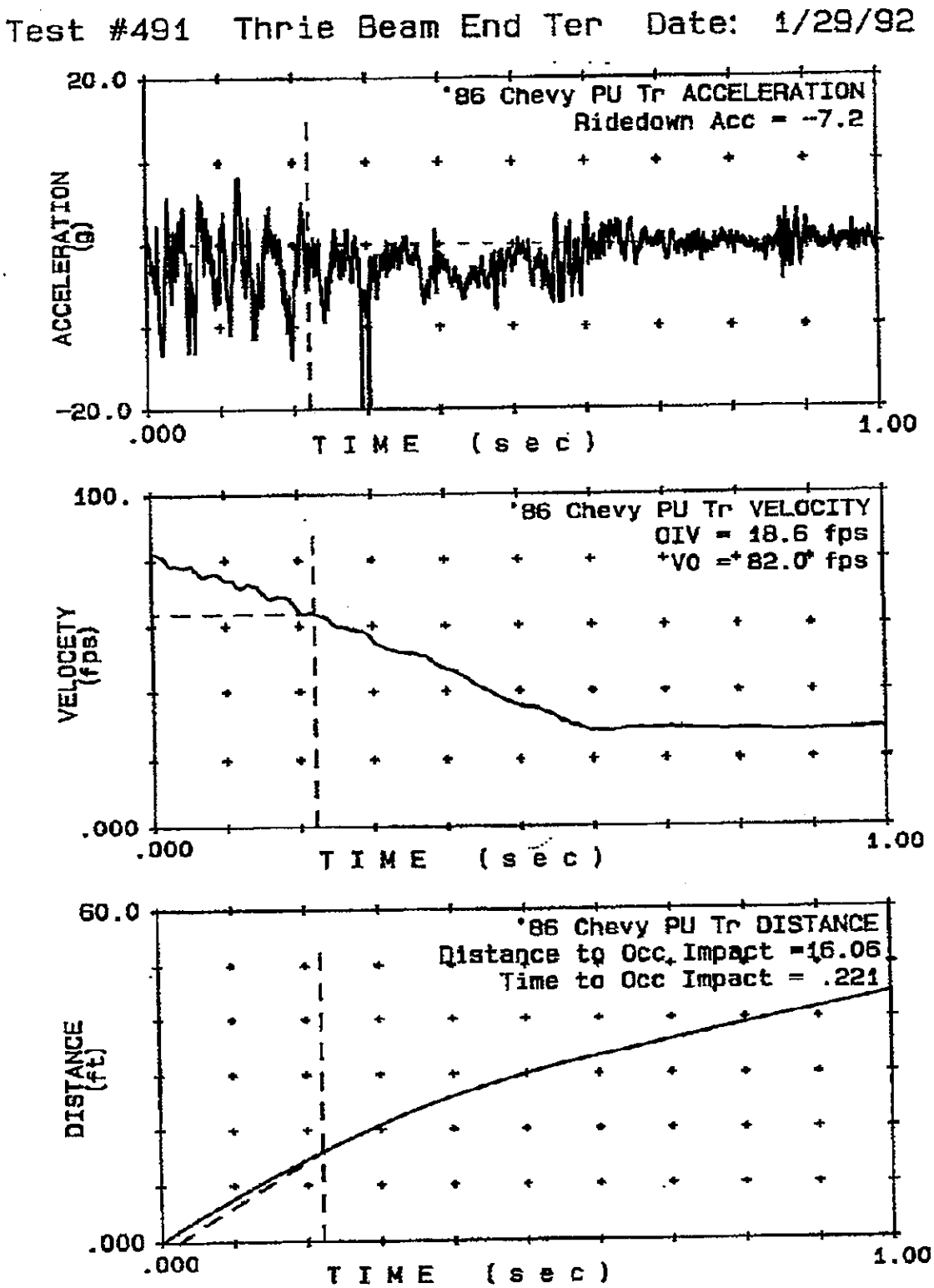

Figure C3: Test 491 - Vehicle Accelerations

ClibPDF - www.fastio.com

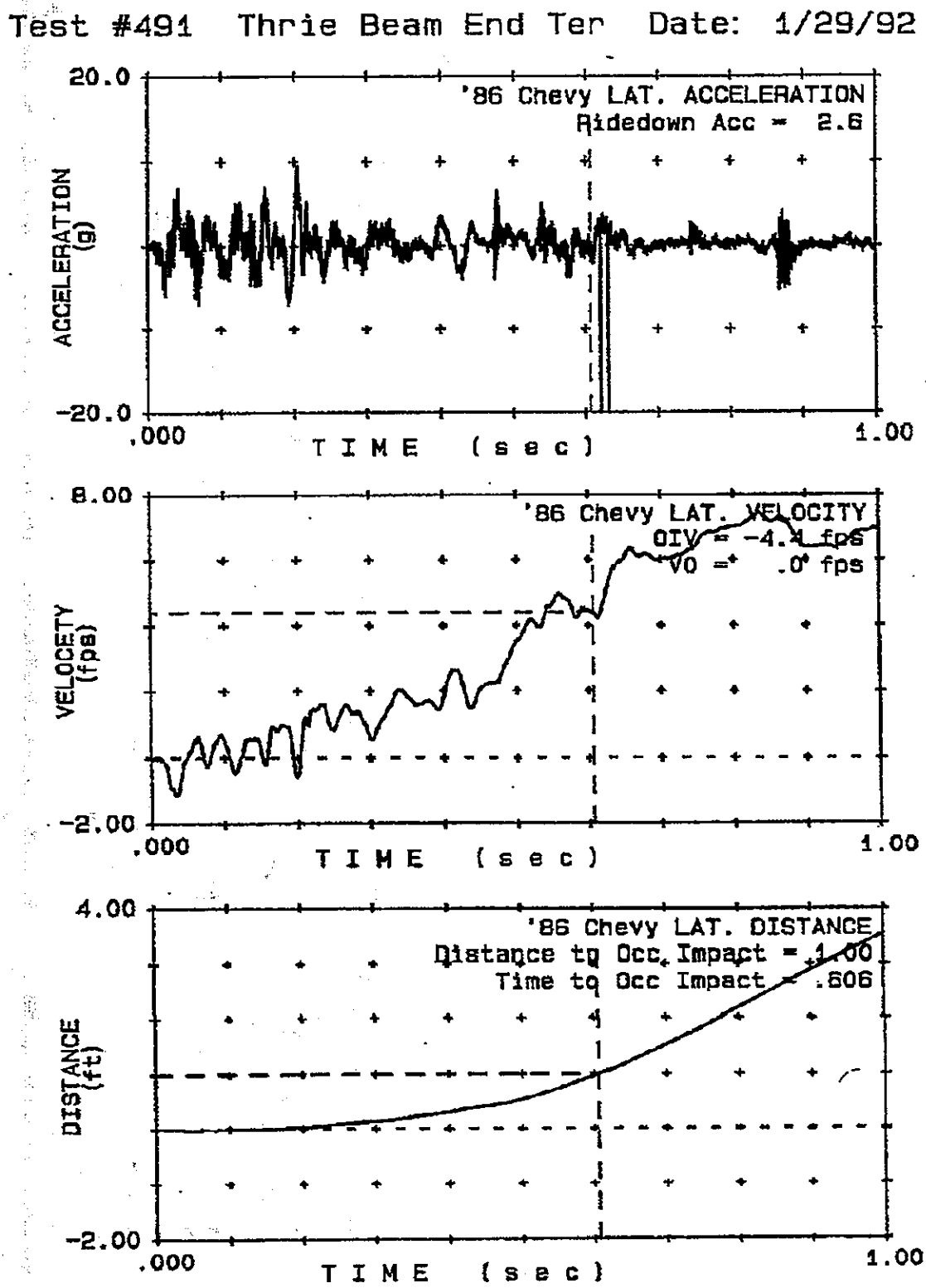

Figure C4: Test 491 - Vehicle Accelerations

ClibPDF - www.fastio.com

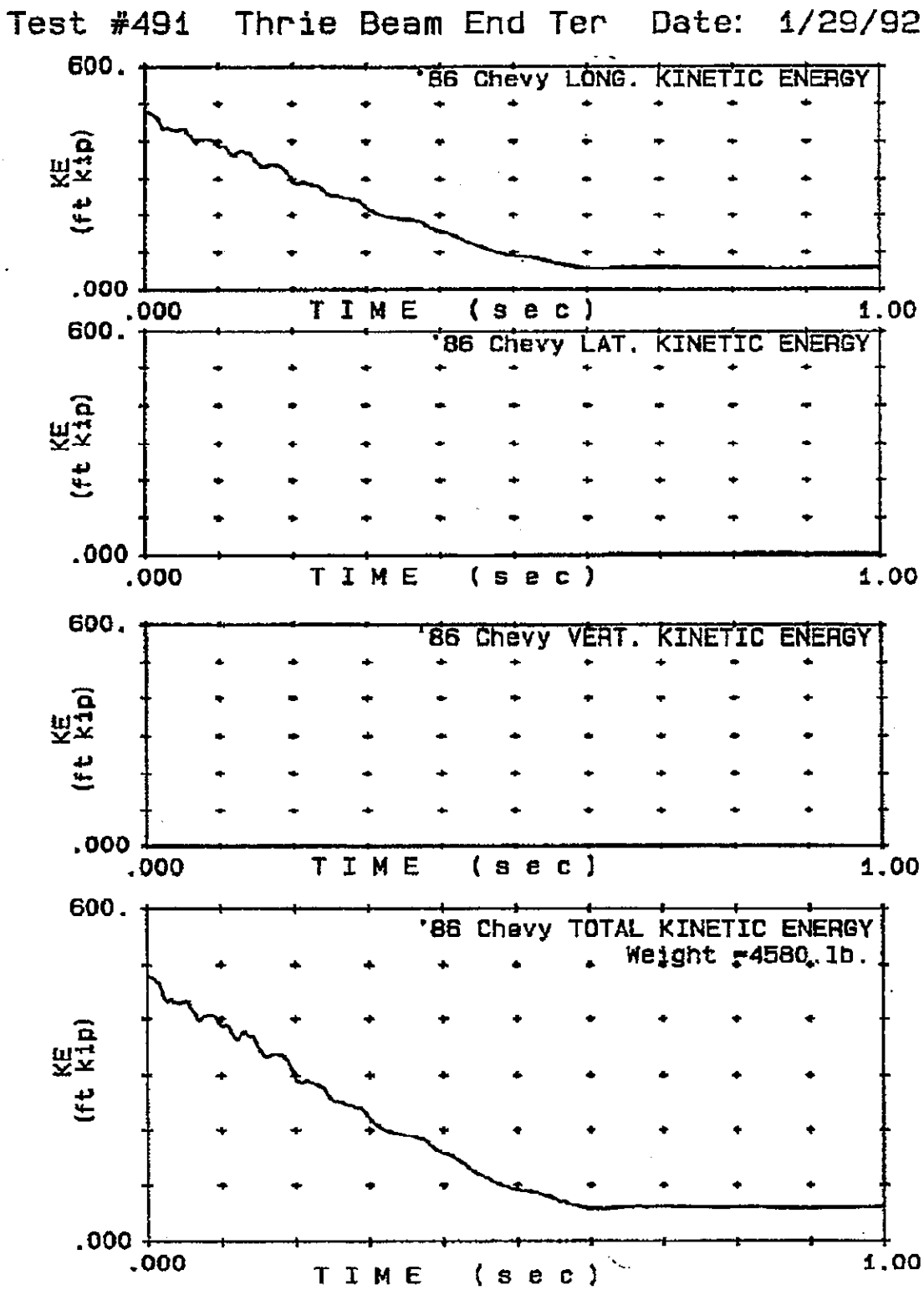

Figure C5: Test 491 - Vehicle Accelerations

ClibPDF - www.fastio.com

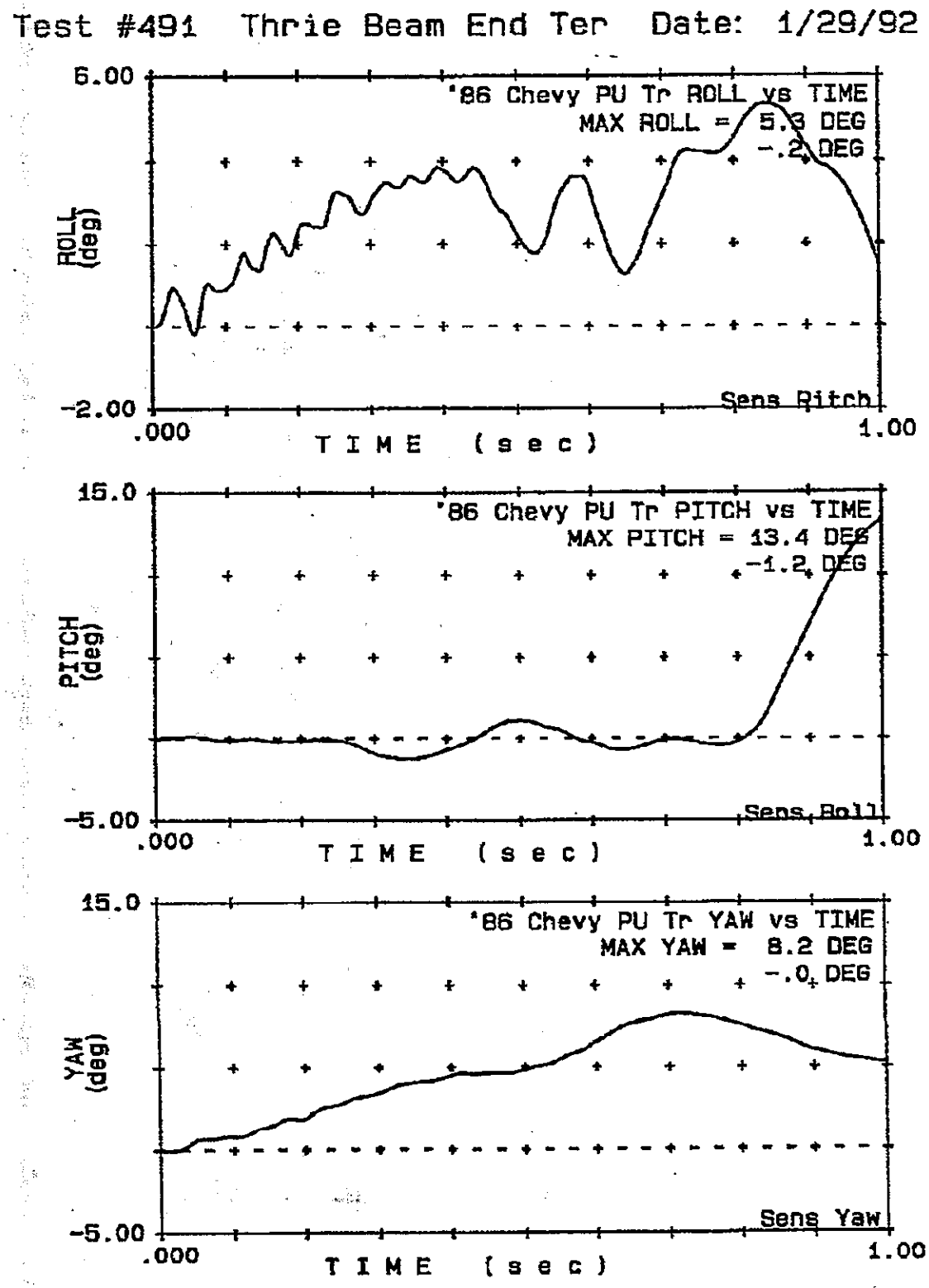

Figure C6: Test 491 - Vehicle Accelerations

ClibPDF - www.fastio.com

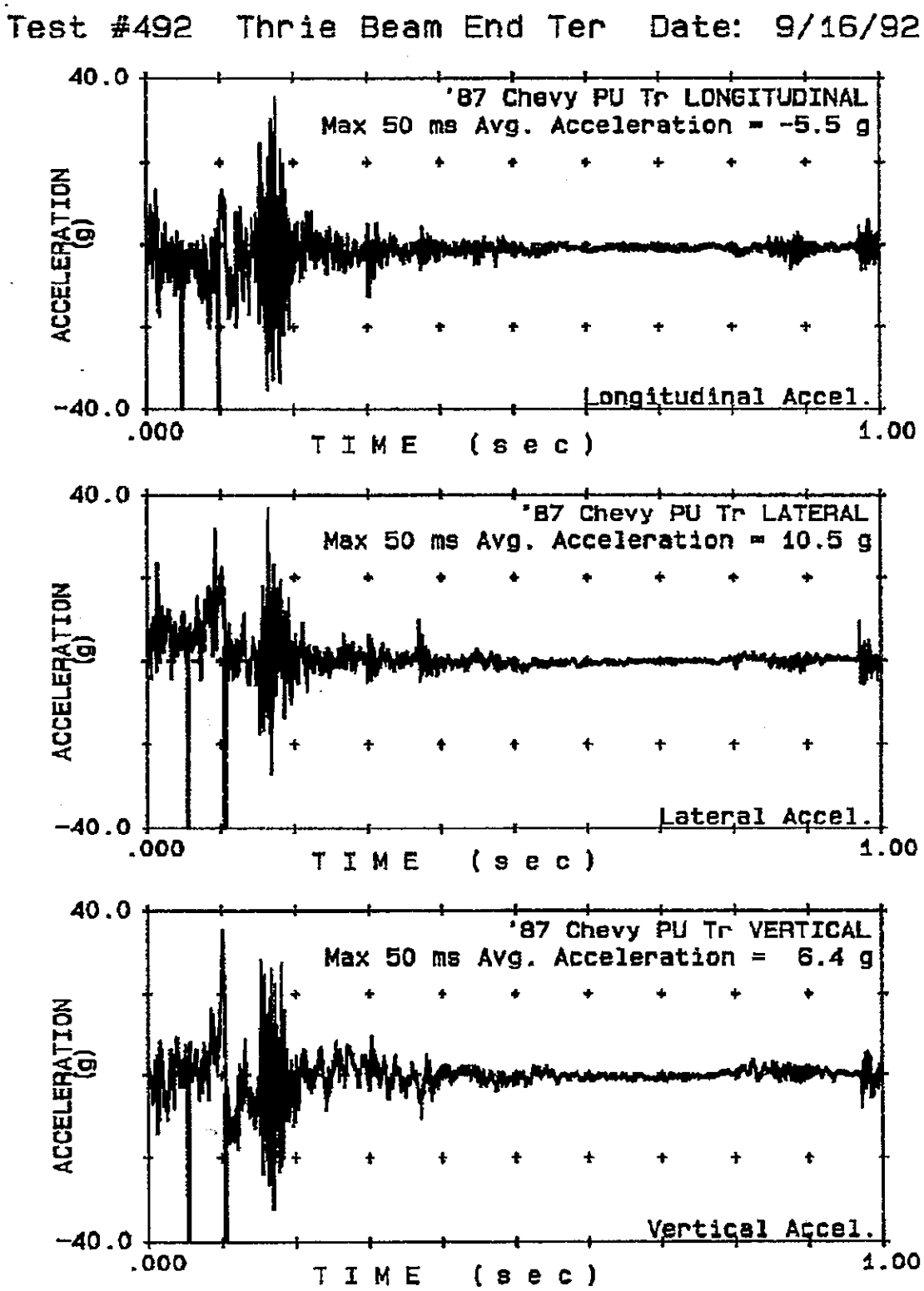

Figure C7: Test 492 - Vehicle Accelerations

ClibPDF - www.fastio.com

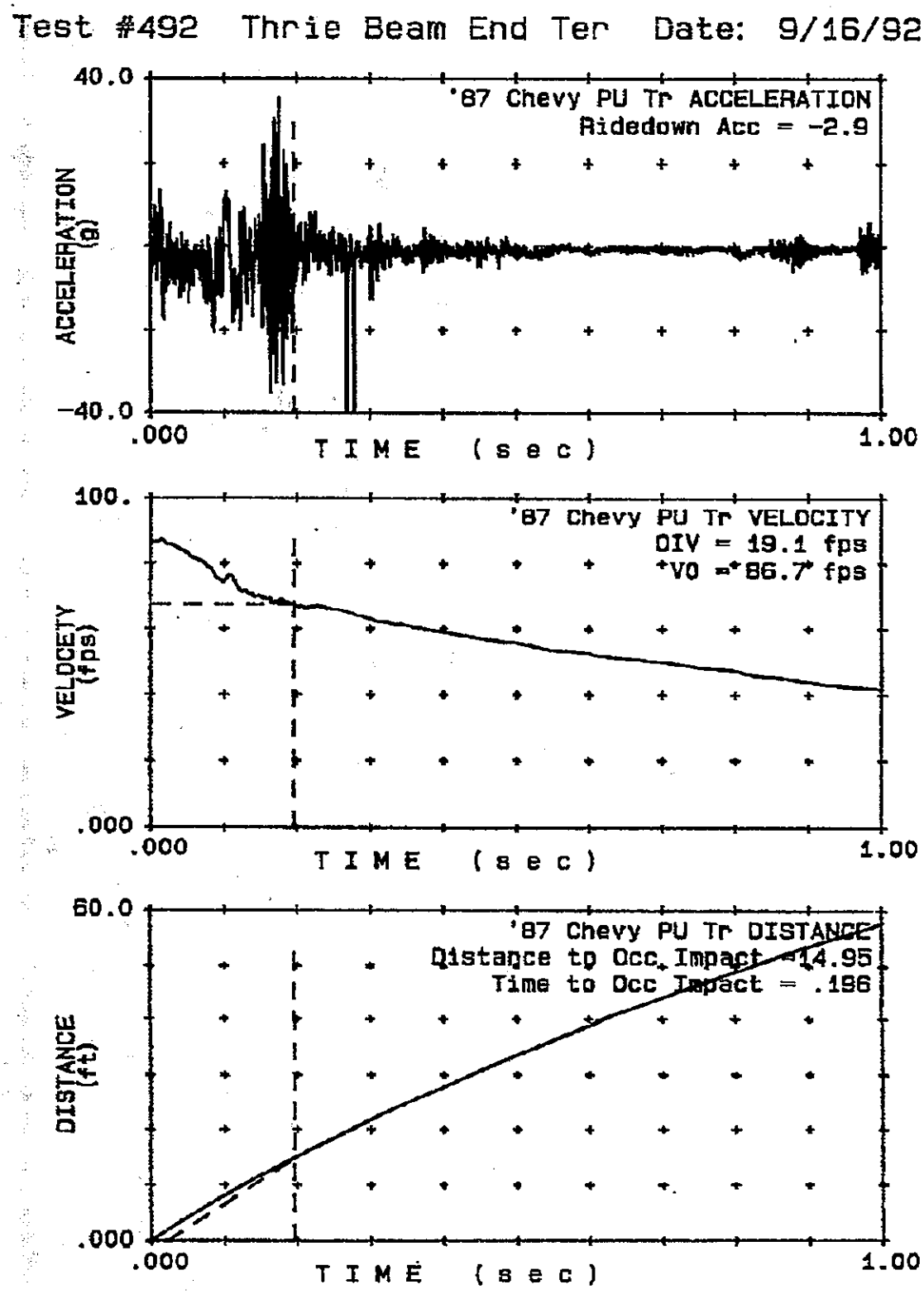

Figure C8: Test 492 - Vehicle Accelerations

ClibPDF - www.fastio.com

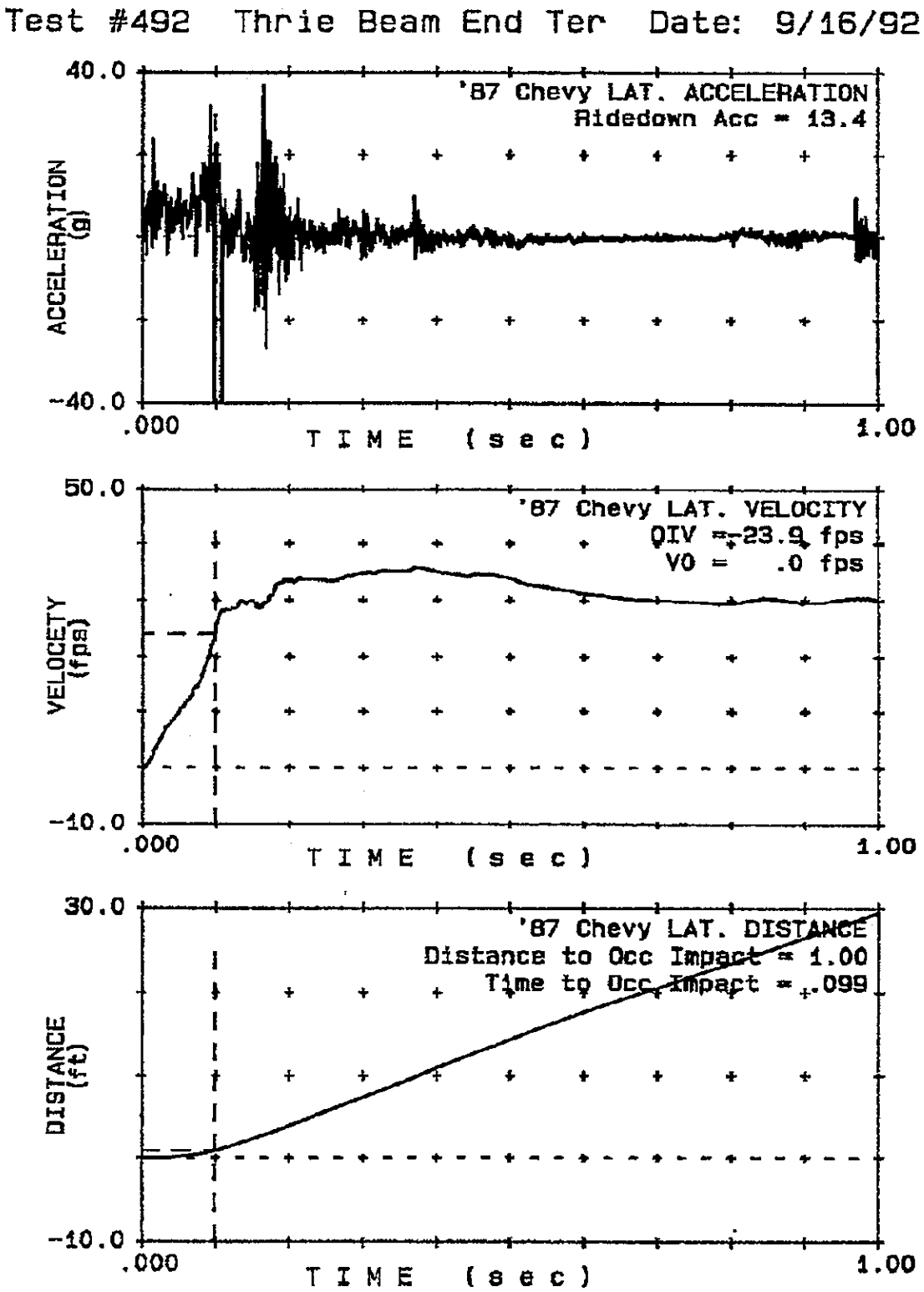

Figure C9: Test 492 - Vehicle Accelerations

ClibPDF - www.fastio.com

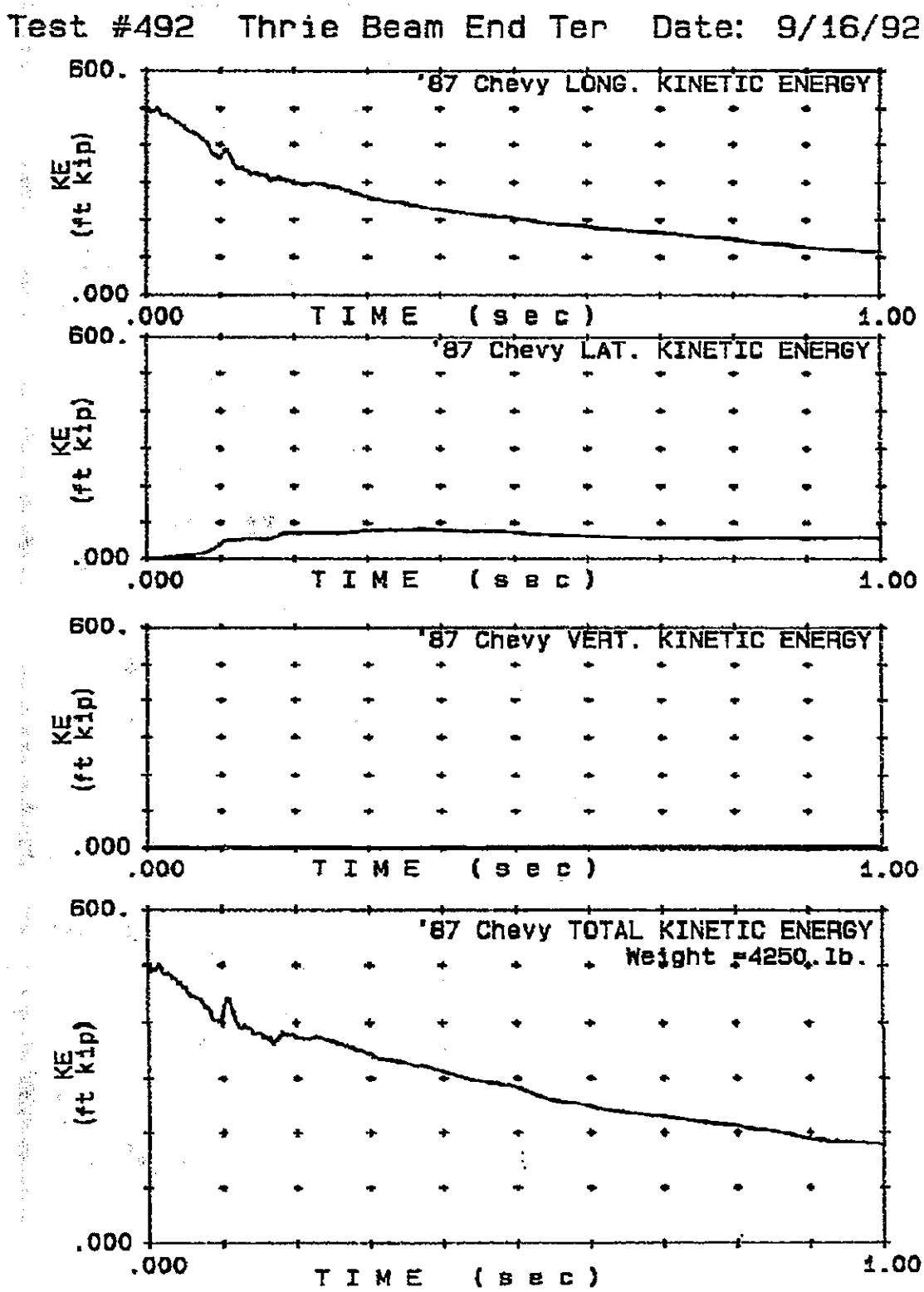

Figure C10: Test 492 - Vehicle Accelerations

ClibPDF - www.fastio.com

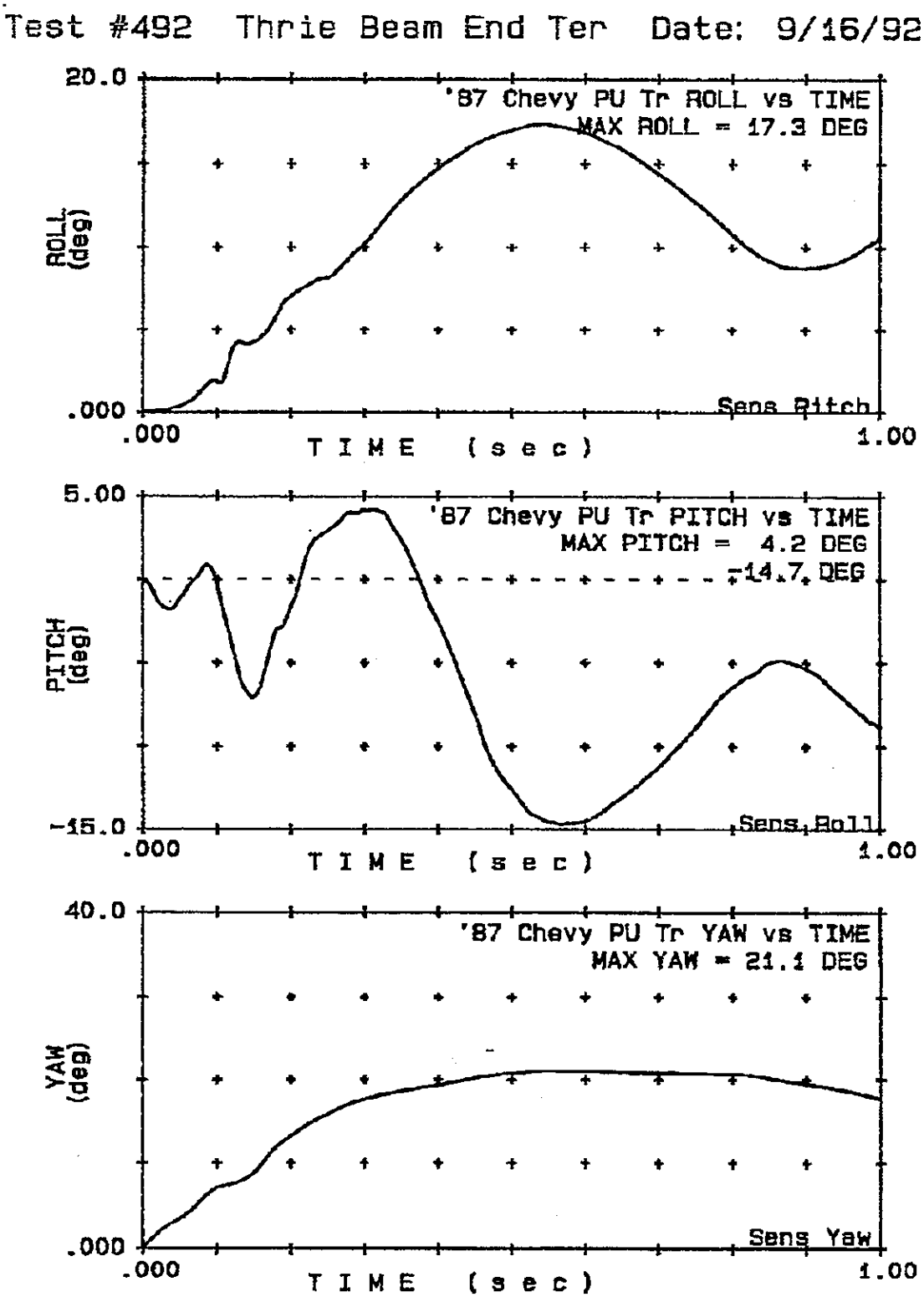

Figure C11: Test 492 - Vehicle Accelerations

ClibPDF - www.fastio.com

The occupant impact velocity is theoretical; however, on the plot of distance vs. time, the curves can be visualized as representing the car windshield and the driver's head. It is assumed that the head starts out two feet (0.6m) behind the windshield. The point where the curves cross represents the impact between the head and the windshield because the windshield has slowed down from the impact velocity, but the head has not. The time when the windshield/head impact occurs (rattle space time) is carried to the plot of velocity vs. time. The occupant impact velocity is the difference between the vehicle impact velocity and the vehicle velocity at the end of the rattle space time.

The vehicle accelerometers were used in determining the occupant impact velocity.

Rate gyros were mounted next to the vehicle accelerometers. They measured the rate of angular change (angular velocity) of the vehicle in the roll, pitch, and yaw directions. Table C1 gives information on the rate gyros used. Figure C1 shows the sign convention for the rate gyros. The data from these transducers were transmitted on the same umbilical cable as the vehicle accelerometers and were also recorded on PACDAS. The rate gyro data were integrated to obtain a curve of angle position versus time after impact so the maximum value of roll, pitch and yaw could be determined.

ClibPDF - www.fastio.com

D. TEST BARRIER MATERIALS TESTS

The materials used in the construction of both barriers were tested for compliance with ASTM, AASHTO or Caltrans requirements. Following is a list of items which were tested successfully and the testing standard which was used:

1-	3/4" cable / 1/4" cable	Caltrans Standard Specification 83-1.02B (5)
2-	3/4" threaded steel rod	ASTM A-449
3-	Thrie beam panel	AASHTO M-180
4-	15" steel tube	ASTM A-36
5-	Steel guide plates	ASTM A-36

The concrete used during the construction was also tested for static strength according to ASTM C-39, the results of which are given below:

Age (days)	Static Strength (MPa / psi)
3	15.1 / 2190
7	21.6 / 3140
14	24.7 /. 3580
28	33.0 / 4780

The concrete was 7 months old for test 491 and 15 months old for test 492.

ClibPDF - www.fastio.com

ClibPDF - www.fastio.com

E. THRIE BEAM TERMINAL DRAWINGS

The following pages show the drawings of the test barrier.

ClibPDF - www.fastio.com

ClibPDF - www.fastio.com

DIST.	COUNTY	ROUTE	POST MILES TOTAL PROJECT	SHEET NO.	TOTAL SHEETS

REGISTERED ENGINEER - CIVIL

REGISTERED PROFESSIONAL ENGINEER No. Exp. CIVIL STATE OF CALIFORNIA

PLANS APPROVAL DATE

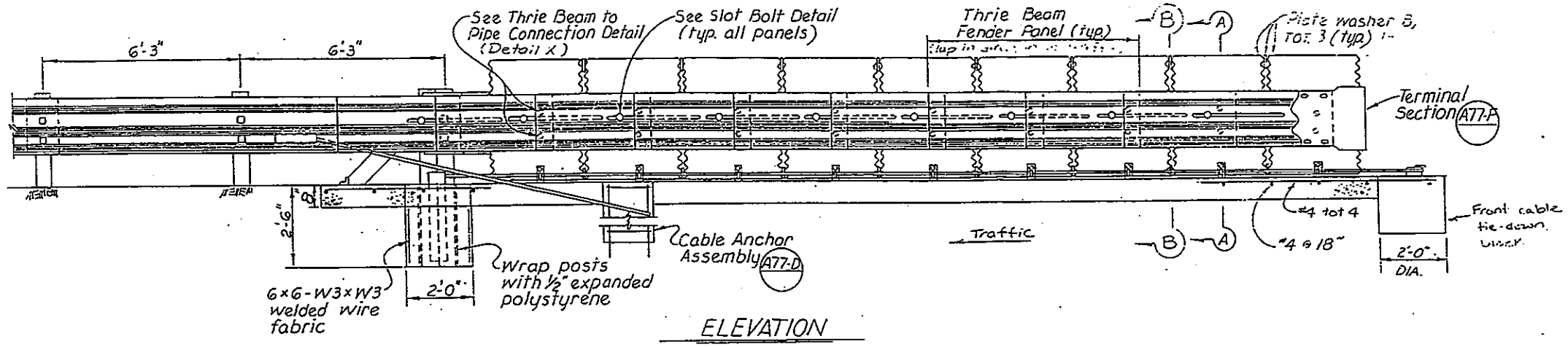

ELEVATION
½" = 1'-0"

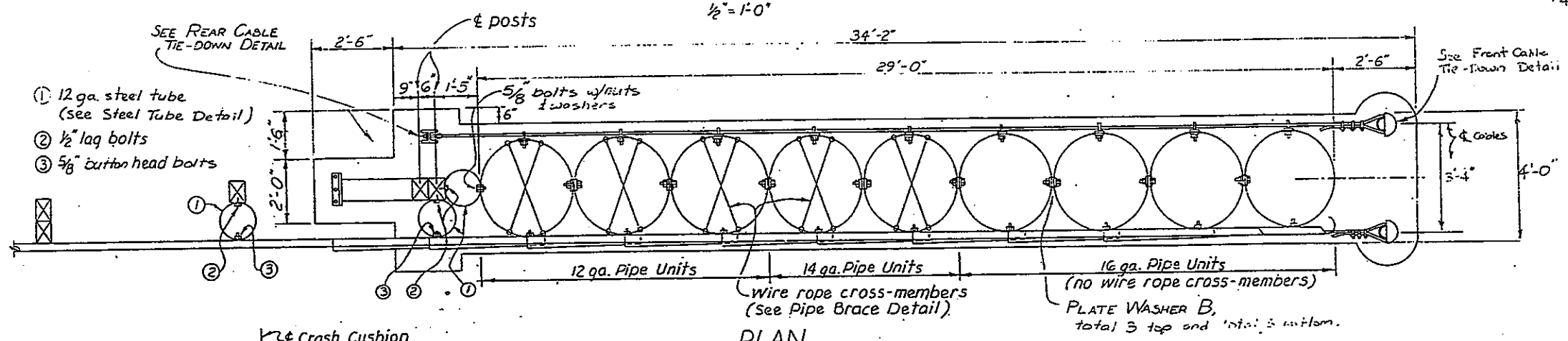

PLAN
½" = 1'-0"

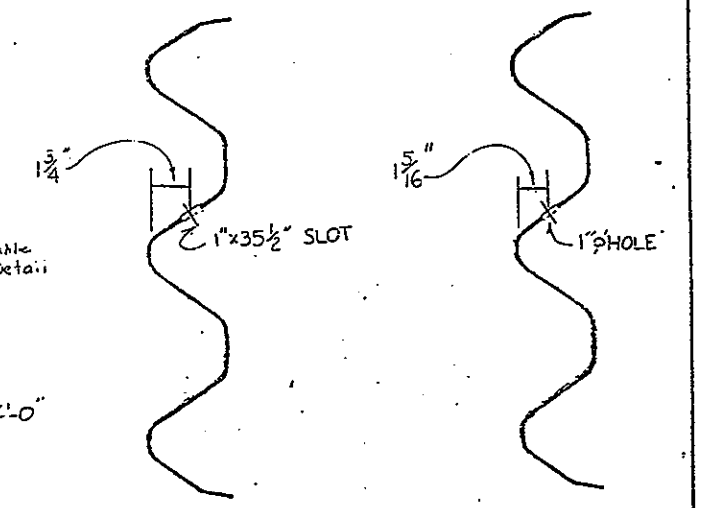

SECTION C-C
NOT TO SCALE

SECTION D-D
NOT TO SCALE

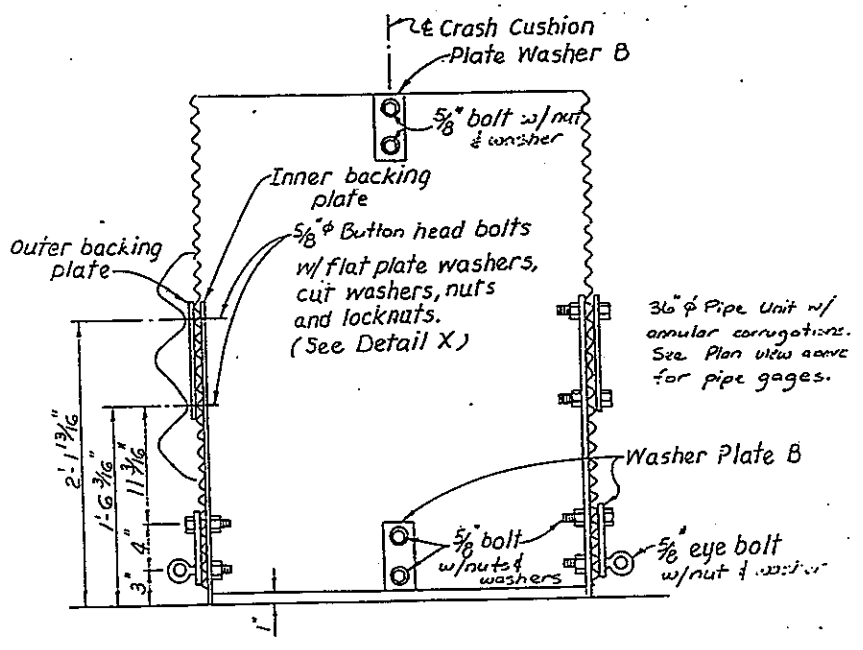

SECTION A-A
1½" = 1'-0"

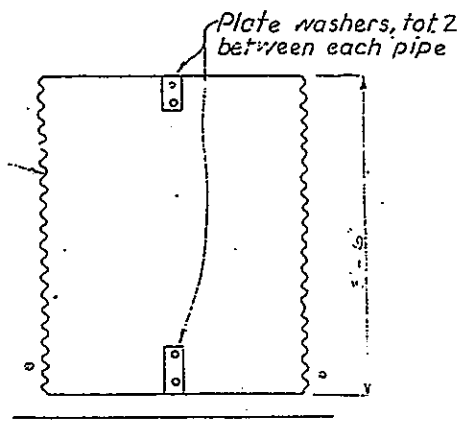

SECTION B-B
1" = 1'-0"

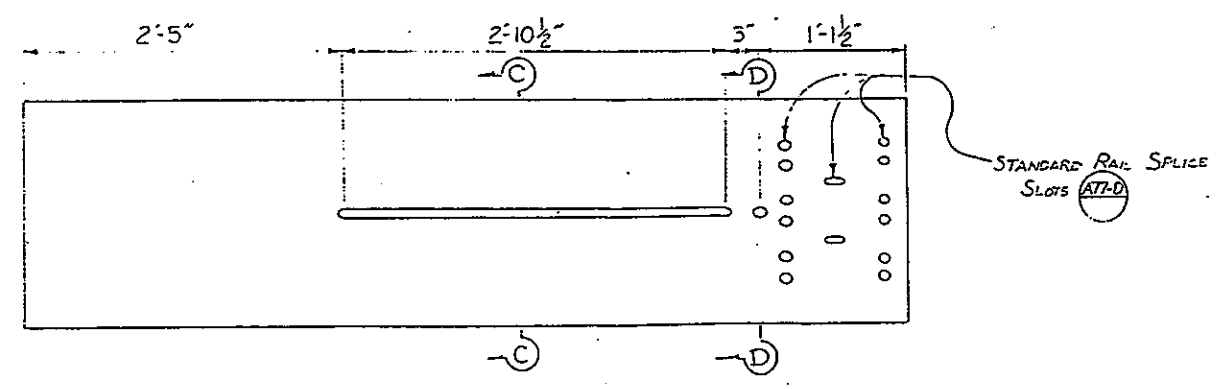

THRIE BEAM FENDER DETAIL
1½" = 1'-0"

DESIGN	BY	CHECKED	
DETAILS	BY M.L.K. 12/80	CHECKED	
QUANTITIES	BY	CHECKED	

ORIGINAL SCALE IN INCHES FOR REDUCED PLANS 0 1 2 3

STATE OF CALIFORNIA DEPARTMENT OF TRANSPORTATION

DIVISION OF STRUCTURES STRUCTURE DESIGN

CU
EA

BRIDGE NO.
POST MILE

DISREGARD PRINTS BEARING EARLIER REVISION DATES

REVISION DATES (PRELIMINARY STAGE ONLY)

SHEET OF

ALTERNATIVE A
THRIE BEAM CRASH CUSHION DETAILS NO.1

ClibPDF - www.fastio.com

ClibPDF - www.fastio.com

ClibPDF - www.fastio.com

DIST.	COUNTY	ROUTE	POST MILES TOTAL PROJECT	SHEET NO	TOTAL SHEETS

REGISTERED ENGINEER - CIVIL

PLANS APPROVAL DATE

REGISTERED PROFESSIONAL ENGINEER No. Exp. CIVIL STATE OF CALIFORNIA

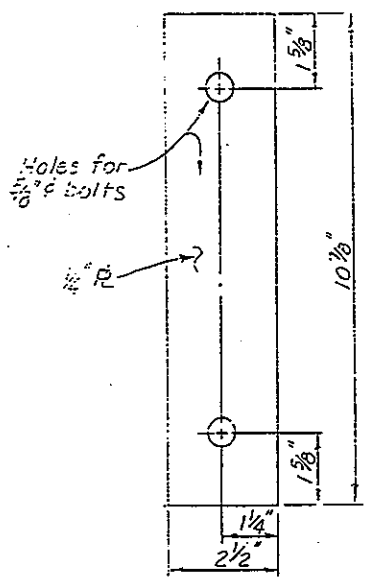

OUTER BACKING PLATE

1/2" = 1"

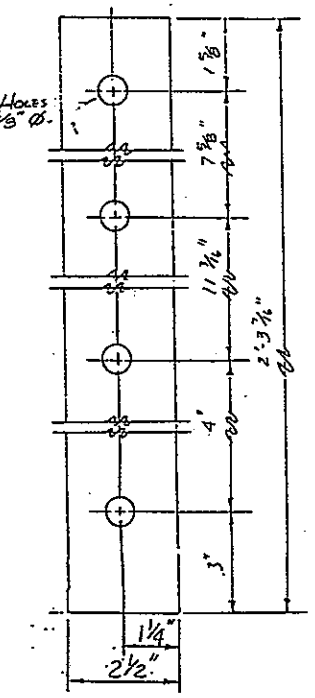

INNER BACKING PLATE

1/2" = 1"

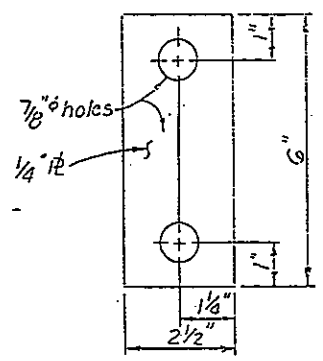

PLATE WASHER "B"

1/2" = 1"

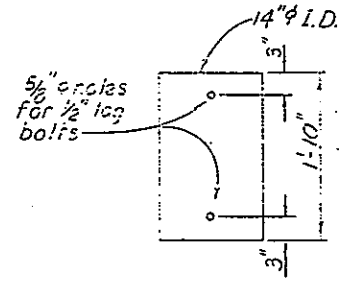

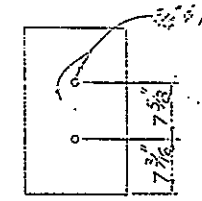

THRIE BEAM FENDER - PIPE UNIT SIDE

STEEL TUBE DETAIL

1" = 1'-0"

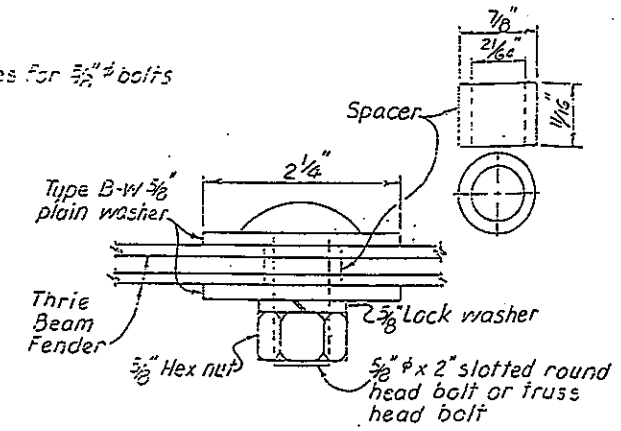

THRIE BEAM SLOT BOLT DETAIL

1" = 1"

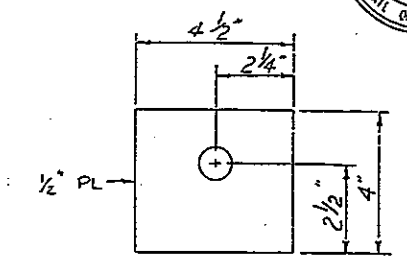

BEARING PLATE

NOT TO SCALE

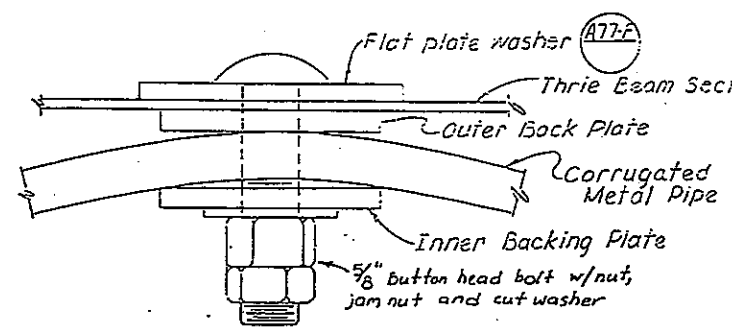

DETAIL "X"

1" = 1"

(Thrie Beam to Pile Connection)

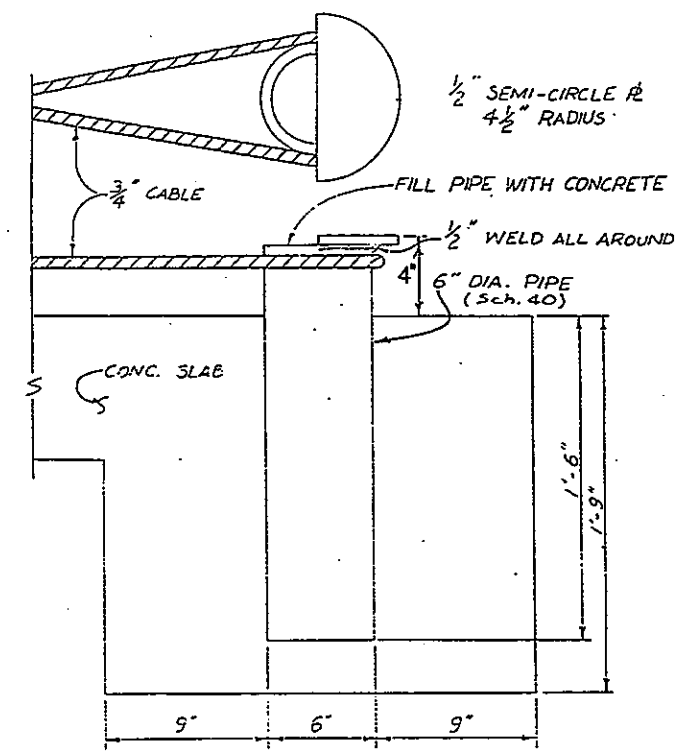

FRONT CABLE TIE-DOWN DETAIL

NOT TO SCALE

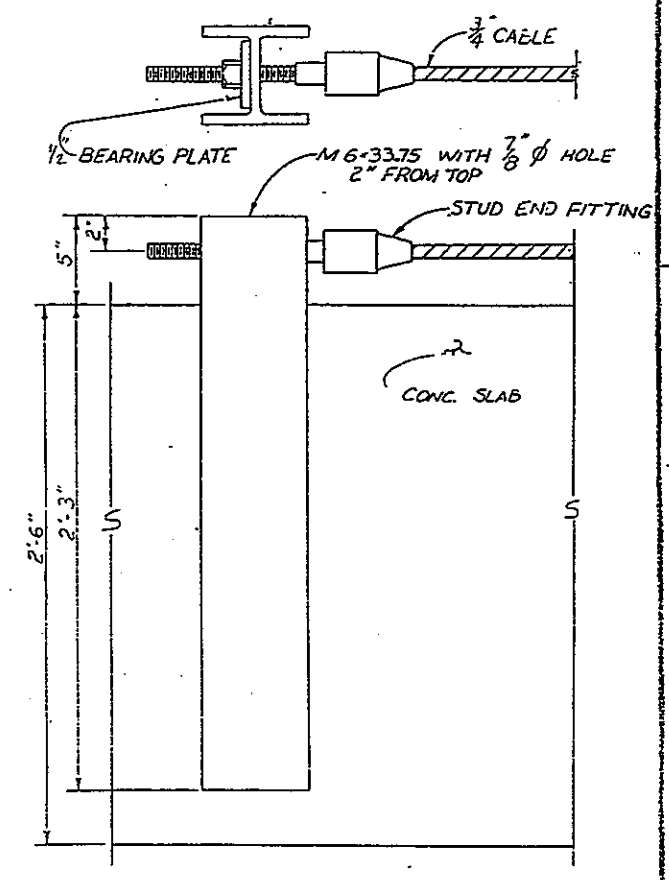

REAR CABLE TIE-DOWN DETAIL

NOT TO SCALE

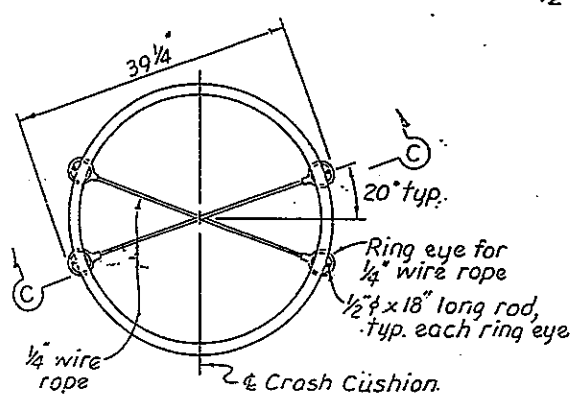

PLAN

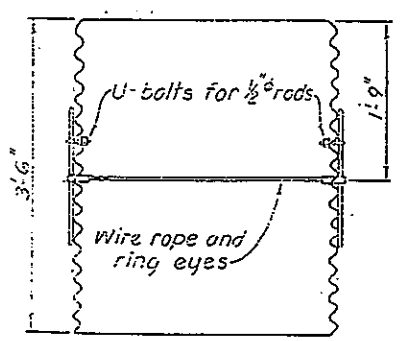

SECTION C-C

PIPE BRACE DETAIL

1" = 1'-0"

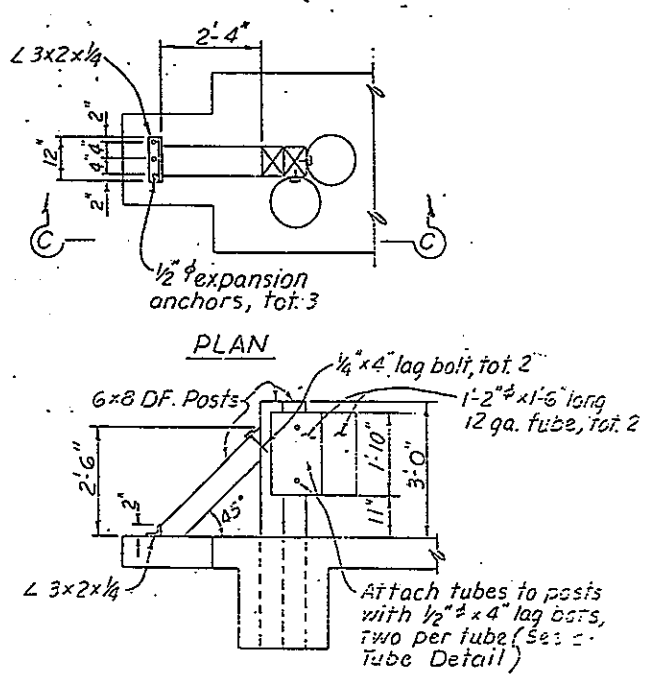

PLAN

SECTION C-C

BACK-UP UNIT

1/2" = 1'-0"

DESIGN	J. H.	Checked	
DETAILS	M.L.	Checked	
QUANTITIES		Checked	

State of CALIFORNIA DEPARTMENT OF TRANSPORTATION

DIVISION OF STRUCTURES STRUCTURE DESIGN

BRIDGE NO.

POST MILE

ALTERNATIVE A

THRIE BEAM CRASH CUSHION DETAILS NO. 2

ORIGINAL SCALE IN INCHES FOR REDUCED PLANS

Disregard prints bearing earlier revision dates

REVISION DATES (PRELIMINARY STAGE ONLY)

SHEET OF

ClibPDF - www.fastio.com

DIST.	COUNTY	ROUTE	POST MILES TOTAL PROJECT	SHEET NO.	TOTAL SHEETS

REGISTERED ENGINEER - CIVIL

REGISTERED PROFESSIONAL ENGINEER No. Exp. CIVIL STATE OF CALIFORNIA

PLANS APPROVAL DATE

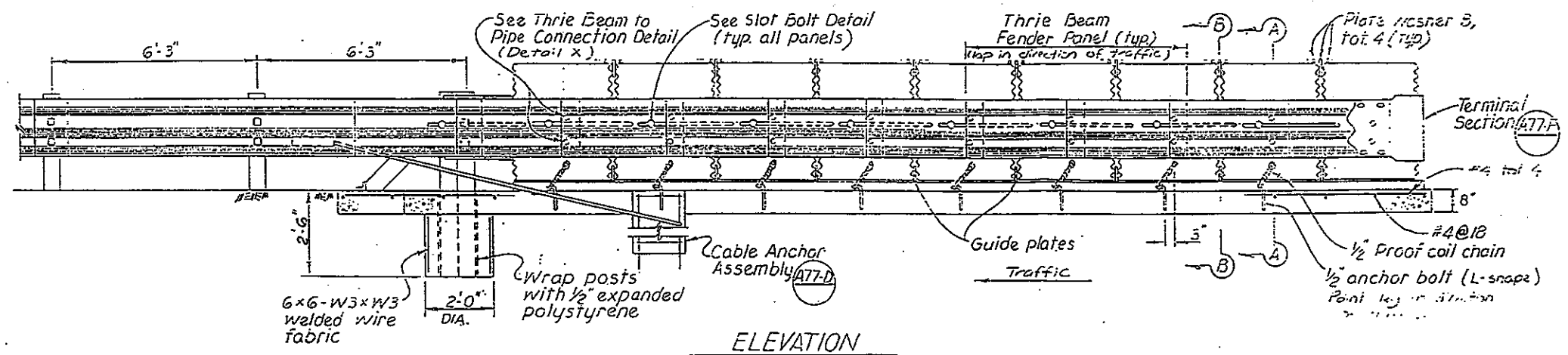

ELEVATION
½" = 1'-0"

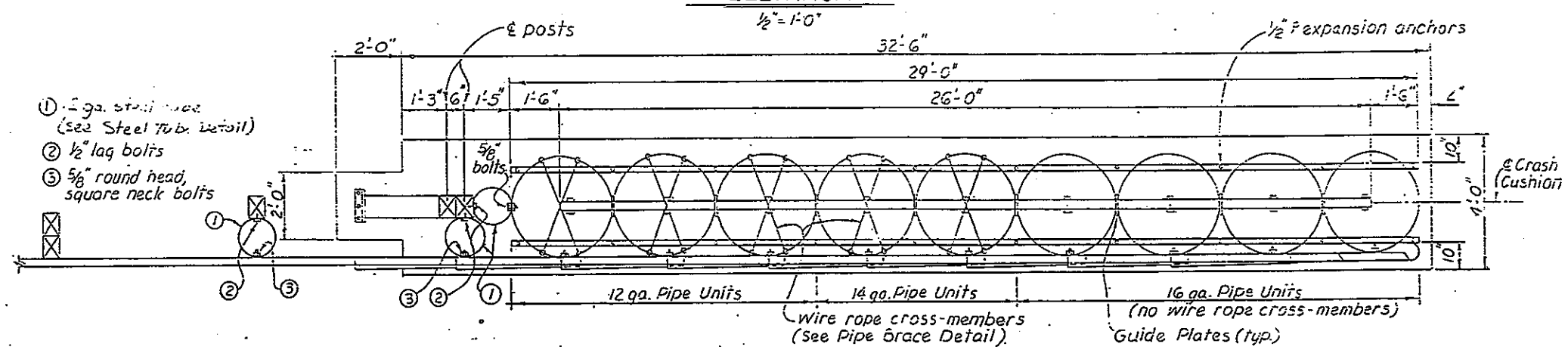

PLAN
½" = 1'-0"

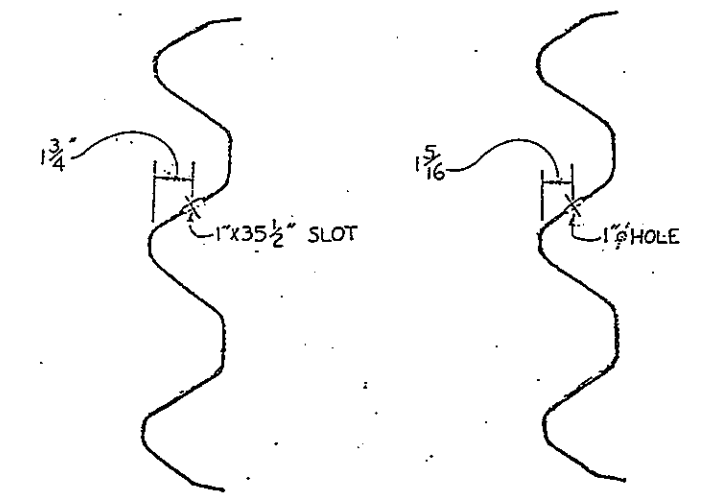

SECTION C-C
NOT TO SCALE

SECTION D-D
NOT TO SCALE

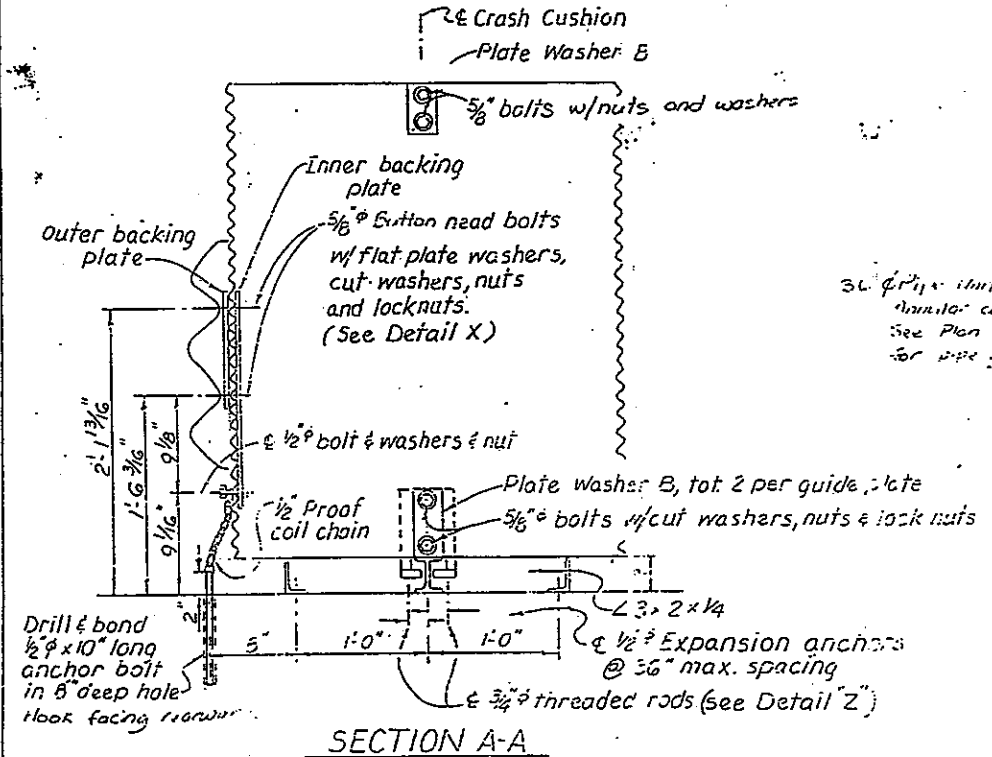

SECTION A-A
1½" = 1'-0"

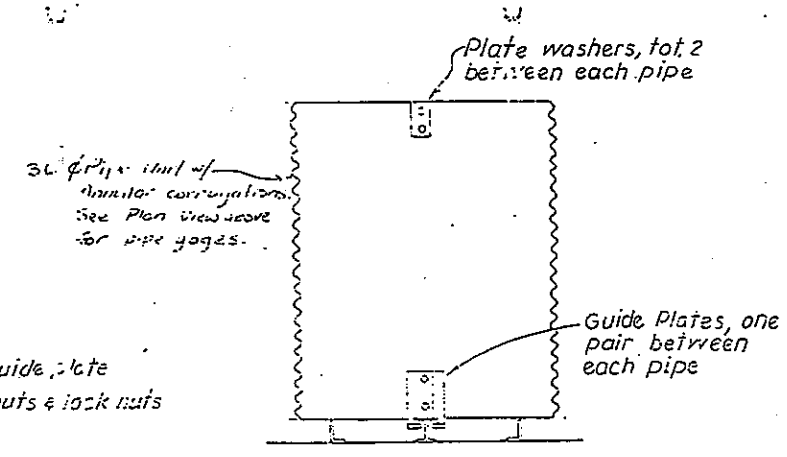

SECTION B-B
1" = 1'-0"

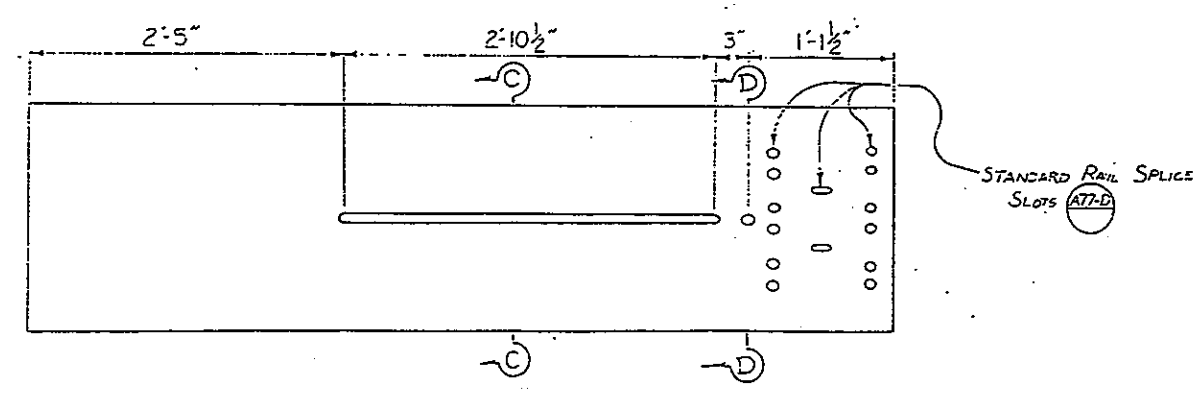

THRIE BEAM FENDER DETAIL
1½" = 1'-0"

DESIGN	J. H.	CHECKED	
DETAILS	J. Hinton 8/89	CHECKED	
QUANTITIES		CHECKED	

STATE OF CALIFORNIA
DEPARTMENT OF TRANSPORTATION

DIVISION OF STRUCTURES
STRUCTURE DESIGN

BRIDGE NO.
POST MILE

ALTERNATIVE B

THRIE BEAM CRASH CUSHION DETAILS NO. 1

DISREGARD PRINTS BEARING PRELIMINARY STAGE ONLY

PRINTING SCALE IN INCHES

ClibPDF - www.fastio.com

ClibPDF - www.fastio.com

DIST.	COUNTY	ROUTE	POST MILES TOTAL PROJECT	SHEET NO.	TOTAL SHEETS

REGISTERED ENGINEER - CIVIL

REGISTERED PROFESSIONAL ENGINEER No. Exp. CIVIL STATE OF CALIFORNIA

PLANS APPROVAL DATE

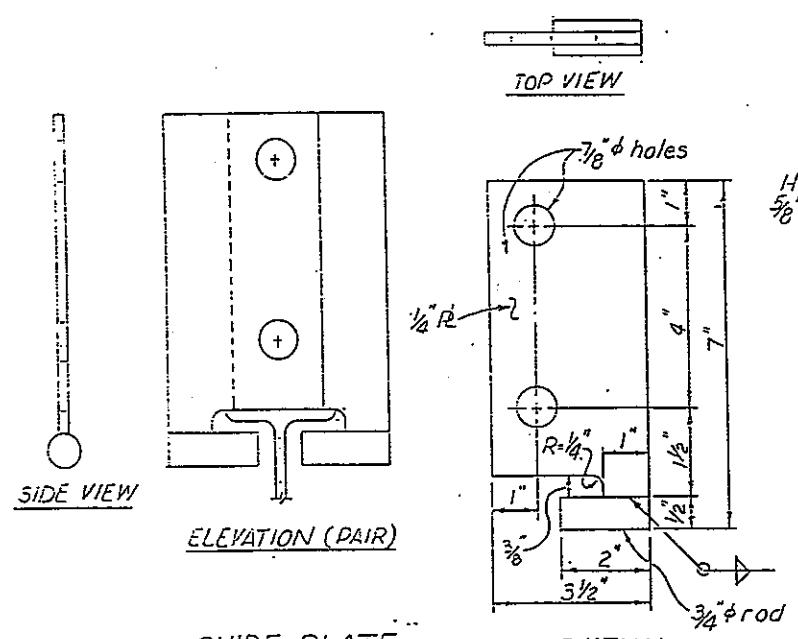

GUIDE PLATE
1/2" = 1"

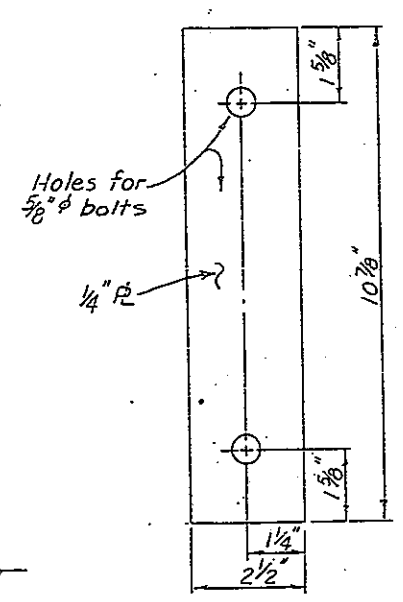

OUTER BACKING PLATE
1/2" = 1"

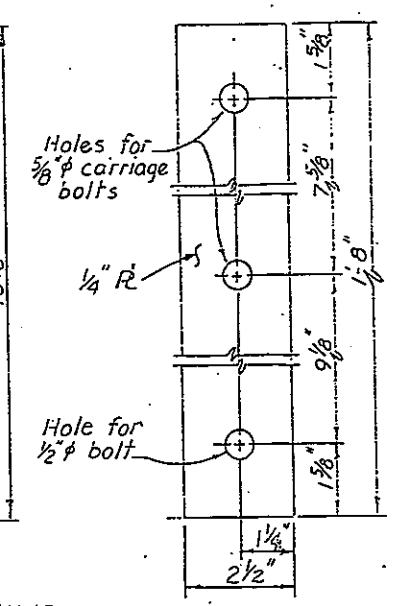

INNER BACKING PLATE
1/2" = 1"

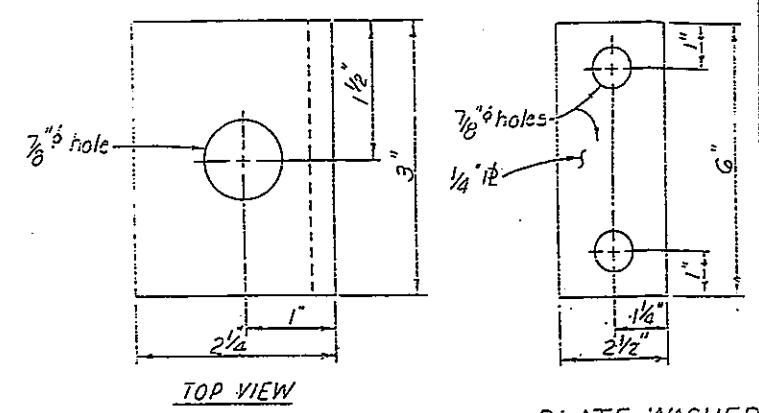

PLATE WASHER "B"
1/2" = 1"

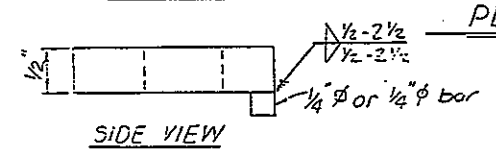

PLATE WASHER "A"
1" = 1"

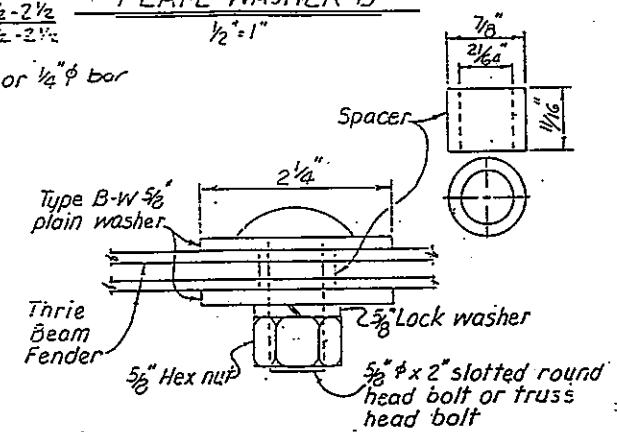

THRIE BEAM SLOT BOLT DETAIL
1" = 1"

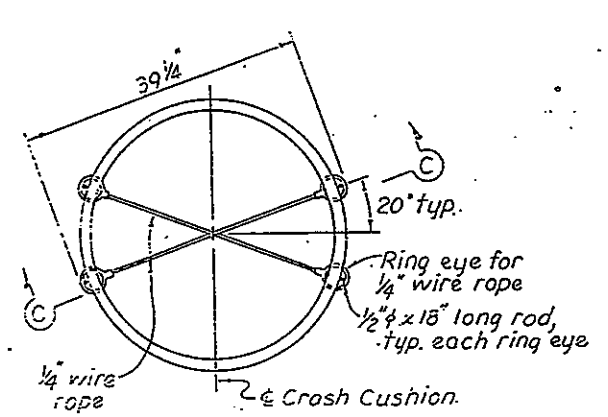

PLAN

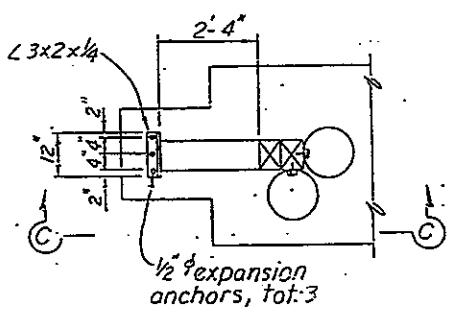

PLAN

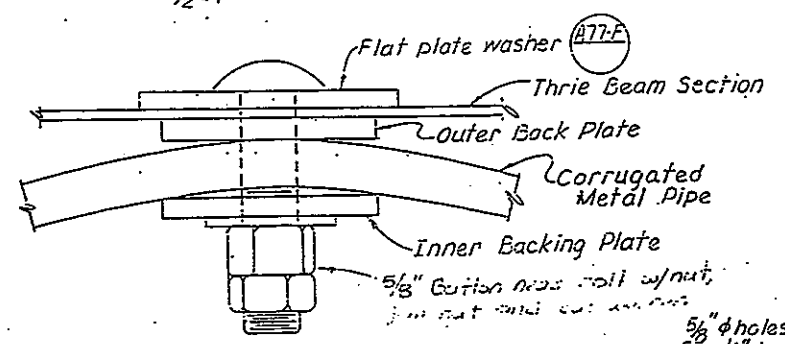

DETAIL "X"
1" = 1"
(Thrie Beam to Pipe Connection)

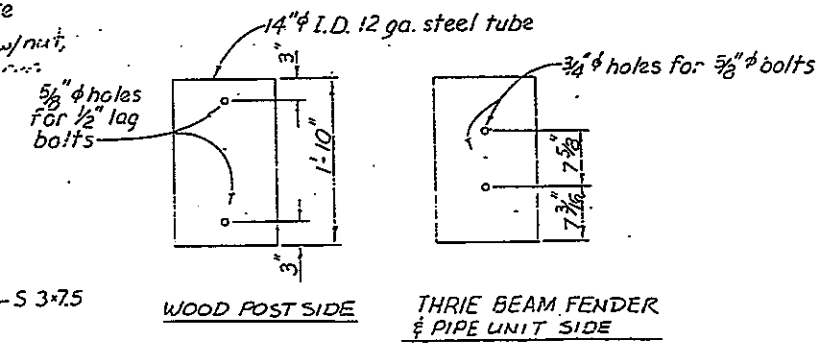

STEEL TUBE DETAIL
1" = 1'-0"

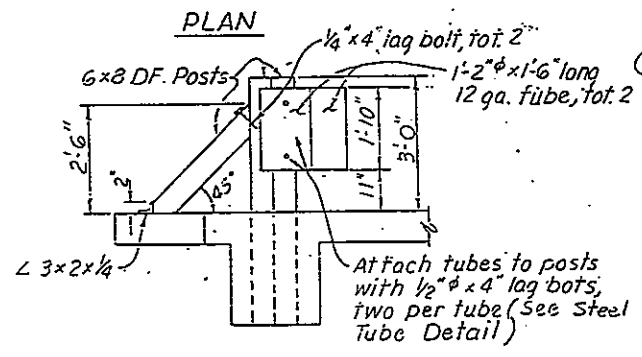

SECTION C-C

BACK-UP UNIT
1/2" = 1'-0"

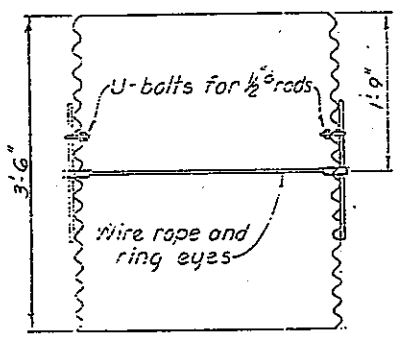

SECTION C-C

PIPE BRACE DETAIL
1" = 1'-0"

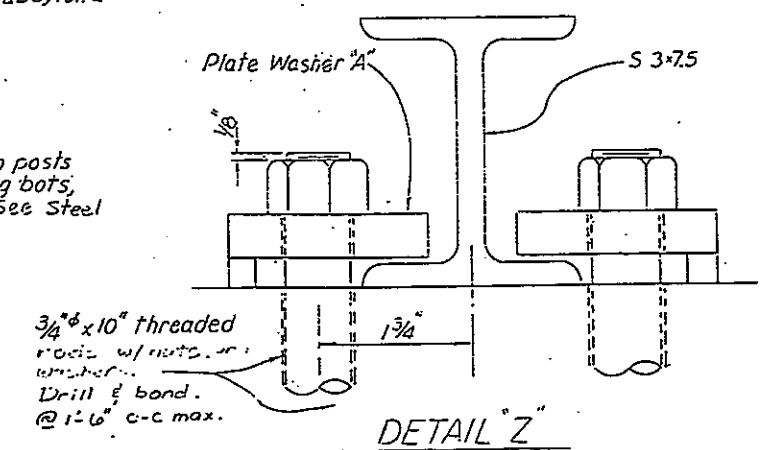

DETAIL "Z"
1" = 1"

DESIGN	BY J. J.	CHECKED
DETAILS	BY J. Hinton 8/89	CHECKED
QUANTITIES	BY	CHECKED

STATE OF CALIFORNIA
DEPARTMENT OF TRANSPORTATION

DIVISION OF STRUCTURES
STRUCTURE DESIGN

CU
EA 165-636965

BRIDGE NO.

POST MILE

ALTERNATIVE B

THRIE BEAM CRASH CUSHION DETAILS NO. 2

ORIGINAL SCALE IN INCHES FOR REDUCED PLANS 0 1 2 3

DISREGARD PRINTS BEARING EARLIER REVISION DATES

REVISION DATES (PRELIMINARY STAGE ONLY) SHEET 1 OF

ClibPDF - www.fastio.com

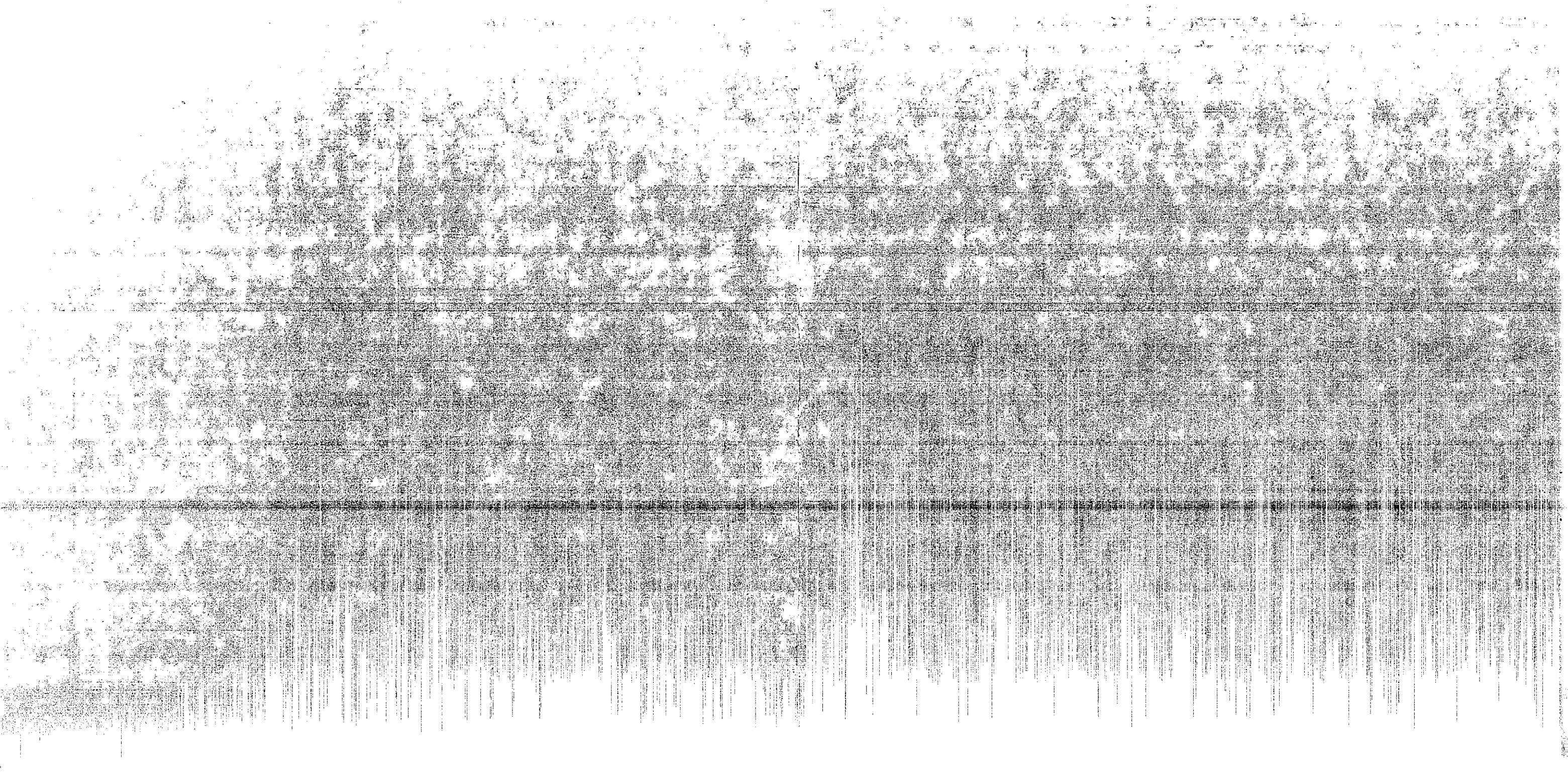

ClibPDF - www.fastio.com

F. COMPUTER PROGRAMS

Following is the computer program, written in DOS BASIC, used for the design of the crushable CMB's:

```
10 KEY OFF
20 REM
30 REM
40 REM
50 REM  ____________________________________________
60 REM [                                            ]
70 REM [   THRIE BEAM TERMINAL MODEL   graph version   ]
80 REM [____________________________________________]
90 REM
100 CLS
110 ON ERROR GOTO 9000
120 LOCATE 10,28
130 COLOR 8,7
140 PRINT "                    "
150 LOCATE 11,28
160 PRINT " THRIE BEAM TERMINAL "
170 LOCATE 12,28
180 PRINT "        MODEL       "
190 LOCATE 13,28
200 PRINT "                    "
210 COLOR 4,0
220 PLAY "mf t240 o4"
223 PLAY "c p4 o3 g mb  o4 c p4 o3 g o4 c o3 g o4 ceg"
250 CLS
260 DEFINT A,B,I,N,Z
270 DEFDBL D,K,V
280 REM
290 REM INSTRUCTIONS AND DESCRIPTION
300 REM
310 PRINT "THRIE BEAM TERMINAL MODEL"
320 PRINT "   This program models an energy absorbing terminal intended for"
330 PRINT "   use with a thrie beam rail.  The energy absorbing elements are"
340 PRINT "   braced corrugated metal pipe segments of varying lengths.  The"
350 PRINT "   length (6 to 48 inches), pipe gauge (12, 14, or 16) and"
360 PRINT "   double bracing angle (0 to 30 degrees or none) are "
370 PRINT "   specified by the user.  At various steps the design is presented "
380 PRINT "   on the screen to be checked for correctness.  Oppertunity for
390 PRINT "   making changes are offered."
400 PRINT
405 PLAY "p2 f p4 df p4 dfdo3 b o4 d o3 g"
410 PRINT "   The model terminal is then subjected to a impact by a large(4500#)"
420 PRINT "   and a small (1800#) car at 60 MPH.  Velocity, displacement,"
430 PRINT "   and acceleration are monitored for the duration of the impact."
440 PRINT "   Occupant impact velocity, peak 50 milisecond acceleration, ride-"
450 PRINT "   down acceleration, average acceleration, and impact duration are"
460 PRINT "   among the printed output.  Answers are sent to both the screen"
470 PRINT "   and the printer (if connected and turned on).
480 PRINT
485 PLAY "l16 gab o4 cc n0"
490 PRINT "   A LOTUS compatable output file is created for making a plot of"
500 PRINT "   the acceleration, velocity, and distance vs. time.
510 PRINT
515 PLAY "l4 c.edcc l8 o3 b.b"
520 REM
530 REM
540 REM list and deffinition of variables
550 REM  arrays
560 DIM PIPE(6,66)        'Strength data for each bracing configuration
570 DIM PIPSTREN(20,66)   'strength data for each model pipe specified
```

ClibPDF - www.fastio.com

```
580 DIM A!(1320)            'instantanious acceleration array
590 DIM D!(1320)            'instantanious distance traveled array
600 DIM STRENGTHFACTOR(20)'factor for each segment reflecting selected gauge
610 DIM STRENGTH(3)        'factor of strength for each gauge
620 DIM T!(1320)            'accumilated time array
630 DIM V!(1320)            'instantanious velocity array
640 DIM GAUGE$(20)         'selected gauge for pipe I
650 DIM GAGE$(3)           'each possible gauge
660 DIM LENGTH(20)         'length of pipe I
665 DIM ABC(20)            'subscript for gage$ of pipe
670 DIM ANGLE$(20)         'selected bracing configuration for each pipe I
675 DIM BRACE(20)          'subscript for braceang$ of pipe
680 DIM BRACEANG$(6)       'each possible bracing configuration
690 DIM INC(20)            'index of increment of Ith segment
700 A=1                    'While loop togle
720 ABC$=""                'input for gauge choice
730 AN$ = "O"              'input$ answer (y or n)
750 BRACE$= ""             'input for bracing choice
760 CRUSH = 0              'amount of crush at maximum load
770 DE   = 0               'change in kinetic energy due to crushing half inch
780 CARWT=1800             'weight of car under deceleration
790 EFFLEN = 0             'effective length of pipe considering overlap at joint
800 ENERGY = 0             'energy absorbed to pipe crush 75%
810 G = 32.174             'acceleration due to gravity
820 GOOD$ = "no"           'While loop togle
830 I =1                   'for-next loop counter
840 IMPFAC! = 1.7          'factor to account for high strain rate
850 INC =0                 'for next counter representing incremental crush
860 KE  =4000              'kinetic energy of car
870 KENEW=3999             'kinetic energy after crushing half inch of segment
880 LASTABC = 0            'previous value for ABC
890 LASTBRACE = 0          'previous value for brace
900 LENGTH = 0             'length of current pipe segment
910 LENFAC = 0             'length adjustment factor for current pipe
920 MAXLOAD = 0            'maximum load for curent pipe segment
930 N =0                   'number of pipe segments selected
940 STRENAVG = 0           'average strength over current increment
950 TITLE$ = ""            'FILE NAME FOR DATA OUTPUT
960 V0 = 88                'initial velocity of car
970 V  = 88                'instantanious velocity of car
980 VNEW = 87              'next velocity of car
990 X$ =""                 'dummy input$ argument
1000 Z = 0                  'WHILE loop toggle
1005 IF R$="y" OR R$="Y" THEN 1350
1010 DATA "16 gauge","14 gauge","12 gauge"
1020 DATA "no","30 degree","25 degree","20 degree","10 degree","0 degree"
1030 FOR I = 1 TO 3
1040   READ GAGE$(I)
1050 NEXT I
1060 FOR I = 1 TO 6
1070   READ BRACEANG$(I)
1080 NEXT I
1090 REM
1100 REM read pipe data from data file
1110 REM
1120 OPEN "I",#2,"PIPEDATA.DAT"
1130 INPUT #2,X$
1140 FOR I = 1 TO 3
1150   INPUT #2, STRENGTH(I)
1160 NEXT I
1170 LINE INPUT #2,X$
1180 FOR INC = 0 TO 66
1190   FOR I = 1 TO 6
1200     INPUT #2, PIPE(I,INC)
1210   NEXT I
1220 NEXT INC
1230 CLOSE #2
1240 PRINT "press any key to run program or <Ctrl><Break> to stop"
1250 SOUND 1250,1 : SOUND  950,2 :SOUND 1208,2
1260 REM
1270 REM begin input to run program
```

ClibPDF - www.fastio.com

```
1280 REM
1290 DATA 1,2,3,4,5,6,"","","",0
1300 FOR I = 1 TO 10
1310   READ X$
1320   KEY I,X$
1330 NEXT I
1340 X$ = INPUT$(1)  'control to begin program
1345 IF ASC(X$)=0 THEN 2095
1350 SCREEN 0,0,0 : WIDTH 80
1355 WHILE LEN(TITLE$)<1
1360   CLS
1370   LOCATE 11,5
1380   PRINT "A name is needed to save the data file under.  It must be under"
1390   LOCATE 12,5
1400   PRINT "eight characters long.  Data is saved on disk drive 'A', be sure"
1410   LOCATE 13,5
1420   PRINT "to have a disk ready in drive A."
1430   LOCATE 15,5
1440   INPUT "Enter the name of this run.";TITLE$
1450   IF LEN(TITLE$)<1 THEN SOUND 100,5
1460 WEND
1470 FILE$ = "A:"+TITLE$+".PRN"
1478 LPRINT CHR$(13);DATE$;SPACE$(33);TIME$
1480 LPRINT "              THRIE BEAM TERMINAL MODEL",CHR$(13),CHR$(13)
1490 LPRINT "The data from this run are stored in the file ";TITLE$;".PRN"
1500 OPEN "O",#3,FILE$
1510 REM  ____________________________________________
1520 REM [                                            ]
1530 REM [         GENERATE MODEL OF TERMINAL         ]
1540 REM [____________________________________________]
1550 REM
1560 CLS
1570 GOSUB 4500      ' input data from previous run
1580 LOCATE 7,7
1590 WHILE N=0
1600   INPUT "How many pipe segments are in this terminal";N
1610   IF N<1 OR N>20 THEN PRINT "There must be from 1 to 20 segments":SOUND 99.5,5:GOTO 1600
1615   GOSUB 4800
1620   FOR I = 1 TO N
1630     GOSUB 3000 'pipedata entry subroutine
1640   NEXT I
1650 WEND
1660 WHILE Z=0
1670   CLS        'display data as entered for entire terminal
1680   PRINT :PRINT :PRINT
1690   PRINT "   Segment    Gauge   Bracing     Length"
1700   PRINT
1710   FOR I = 1 TO N
1720     ANGLE$(I) = BRACEANG$(BRACE(I))
1730     GAUGE$(I) = GAGE$(ABC(I))
1740     PRINT USING "      ##      \   \   \        \   ##.#";I,GAUGE$(I),ANGLE$(I),LENGTH(I)
1750   NEXT I
1760   PRINT
1765   PRINT "Average steel weight added to each pipe is";STEEL;"lbs. Enter 's' to change it"
1770   PRINT
1780   PRINT "Any changes?"
1790   X$ = INPUT$(1)
1798  IF X$="s" OR X$="S" THEN GOSUB 4800
1800   IF X$="N" OR X$="n" THEN Z = 1 : GOTO 1820
1810   IF X$="y" OR X$="Y" THEN GOSUB 2600
1820 WEND
1825 CLS
1826 LOCATE 7,7
1827 PRINT "Which do you wish to run?"
1828 PRINT "          1. 1800# and 4500# cars at 60 mph
1829 PRINT "          2. Custom size and speed of cars
1830 PRINT "          3. Both of the above
1831 X$ = INPUT$(1)
1832 IF X$="1" THEN R$ = "s"
1833 IF X$="2" THEN R$ = "c"
1834 IF X$="3" THEN R$ = "b"
```

ClibPDF - www.fastio.com

```
1835 IF VAL(X$)<1 OR VAL(X$)>3 THEN SOUND 105,5 : GOTO 1827
1840 GOSUB 4600       ' output terminal data this run
1850 BEGIN$ = TIME$
1860 PLAY "mb l8 cccn0ccc"
1865 CLS
1870 GOSUB 4700
1880 FOR I = 1 TO N
1890  GOSUB 4000
1900 NEXT I
1920  REM_____________________________________________
1930 REM    set weight and velocity for small and large car
1940 REM ---------------------------------------------------
1945 IF R$ ="c" THEN X$="y" : GOTO 2070
1950 CARWT = 1800 : C=3
1960 V0 = 88
1970 GOSUB 5000
1980 PLAY "mb l8 aaac"
1990 CARWT = 4500 : C=1
2000 V0 = 88
2010 GOSUB 5000
2020 ENDT$ = TIME$
2030 PLAY "mb l8 cag"
2040 PRINT "Thinking took from ";BEGIN$;" to ";ENDT$;"."
2045 IF R$="s" THEN 2093
2050 PRINT "Do you wish to run a custom size and speed?"
2060 X$ = INPUT$(1)
2070 IF X$ ="y" OR X$="Y" THEN GOSUB 2500
2080 IF X$= "N" OR X$="n" THEN 2090 ELSE SOUND 100,5 : GOTO 2050
2090 CLS
2093 CLOSE
2094 LPRINT CHR$(12)
2095 COLOR 14
2096 PRINT "          Do you wish to run this program again?"
2100 R$ = INPUT$(1) : COLOR 12:CLS
2110 IF R$ ="y" OR R$="Y" THEN GOTO 700
2120 IF R$= "N" OR R$="n" THEN END  ELSE SOUND 100,5 : GOTO 2095
2130 REM [*********************************]
2140 REM [          end of program         ]
2150 REM [*********************************]
2160 REM
2170 REM       SUBROUTINES
2180 REM       -----------
2190 'draw graph
2200 SCREEN 1,0 : LINE (30,0)-(30,170)
2210 LINE -(319,170)
2220 FOR X = 65 TO 330 STEP 35 : LINE (X,166)-(X,170) : NEXT X
2230 FOR Y =132.5 TO 0 STEP -37.5 : LINE (30,INT(Y))-(34,INT(Y)) : NEXT Y
2240 LOCATE 3,2 : PRINT "20" : LOCATE 12,1 :PRINT "acc" : PRINT "(g)"
2250 LOCATE 23,10 : PRINT "time (sec)":LOCATE 23,38 : PRINT ".8"
2260 LINE (30,170)-(30,170):RETURN
2470 REM ______________________________
2480 REM input a custom carwt and v0
2490 REM ------------------------------
2500 INPUT "what is your speed in miles per hour";V0
2510 INPUT "what is your car weight in pounds";CARWT
2520 V0 = V0*5280/3600
2530 GOSUB 5000
2540 RETURN
2570 REM ________________________
2580 REM  correction routine
2590 REM --------------------------
2600 PRINT
2610 X$=""
2620 INPUT "Which segment do you want to correct? (enter '0' to change the number          of segments)";I
2630 IF I<0 OR I>N THEN SOUND 100,5 : GOTO 2620
2640 IF I=0 THEN INPUT "How many segments";N ELSE GOSUB 3000
2650 RETURN
2950 REM  ____________________________________
2960 REM [                                    ]
2970 REM [     input pipe segments subroutine ]
2980 REM [____________________________________]
```

ClibPDF - www.fastio.com

```
2990 REM
3000   GOOD$ = "no"
3010   WHILE GOOD$ = "no"
3020     ENERGY = 0
3030     MAXLOAD = 0
3040     A = 1
3042     IF LASTABC=0 THEN LASTABC = ABC(I)
3044     IF LASTBRACE=0 THEN LASTBRACE = BRACE(I)
3046     IF LASTLEN=0 THEN LASTLEN = LENGTH(I)
3050     WHILE A=1
3060       COLOR 10
3065       CLS
3070       PRINT:PRINT:PRINT:PRINT :PRINT:PRINT:PRINT
3080       PRINT TAB(15);"1.   16ga"
3090       PRINT TAB(15);"2.   14ga"
3100       PRINT TAB(15);"3.   12ga"
3110       PRINT
3120       PRINT "    Select gauge for pipe segment ";I;"."
3130       PRINT : PRINT : COLOR 14
3140       IF I>1 THEN PRINT "    <F10> for ";GAGE$(LASTABC)
3150       ABC$ = INPUT$(1)
3160       IF ASC(ABC$)>47 AND ASC(ABC$)<52 THEN ABC(I)=VAL(ABC$):A=0 ELSE SOUND 101,5
3170       IF ABC(I)=0 THEN ABC(I) = LASTABC
3180     WEND
3190     LASTABC = ABC(I)
3200     STRENGTHFACTOR(I) = STRENGTH(ABC(I))
3210     GAUGE$(I) = GAGE$(ABC(I))
3220     WHILE A=0
3230       CLS  : COLOR 10
3240       PRINT:PRINT:PRINT:PRINT :PRINT:PRINT:PRINT
3250       PRINT TAB(13);"1. No Bracing"
3260       PRINT TAB(13);"2. 30 degrees"
3270       PRINT TAB(13);"3. 25 degrees"
3280       PRINT TAB(13);"4. 20 degrees"
3290       PRINT TAB(13);"5. 10 degrees"
3300       PRINT TAB(13);"6.  0 degrees"
3310       PRINT
3320       PRINT "Select the bracing angle for segment #";I;"."
3330       PRINT : COLOR 14
3340       IF I>1 THEN PRINT "    <F10> for ";BRACEANG$(LASTBRACE)
3350       BRACE$ = INPUT$(1)
3360       IF ASC(BRACE$)>47 AND ASC(BRACE$)<55 THEN BRACE(I)=VAL(BRACE$):A=1 ELSE SOUND 100.5,5.5
3370       IF BRACE(I)=0 THEN BRACE(I) = LASTBRACE ELSE BRACE(I) = BRACE(I)
3380     WEND
3390     ANGLE$(I) = BRACEANG$(BRACE(I))
3400     KEY 10,"["+CHR$(13)
3410     CLS
3420     LASTBRACE = BRACE(I)
3430     LOCATE 5,7
3440     WHILE A=1
3450       COLOR 10
3455       PRINT "How long is pipe segment #";I;" in inches?"
3460       PRINT : COLOR 14
3470       IF I>1 THEN PRINT "    <F10> for ";LASTLEN
3480       INPUT LENGTH$
3490       IF LENGTH$="[" THEN LENGTH = LASTLEN ELSE LENGTH =VAL(LENGTH$)
3500       IF LENGTH<4 OR LENGTH>48 THEN CLS:SOUND 102,6:PRINT "Length out of range.  Try again." ELSE A = 0
3510       LENGTH(I) = LENGTH
3520     WEND
3530     LASTLEN = LENGTH
3540     CLS
3550     KEY 10,"0"
3560      GOSUB 4000
3570     CLS
3580     LOCATE 8,1
3590     PRINT "    Pipe segment #";I;" has been selected as ";GAUGE$(I);" with ";ANGLE$(I);" bracing."
3600     PRINT
3610     PRINT "    The specified length is";LENGTH;"inches, yielding an effective length of";EFFLEN;"."
3620     PRINT
3630     PRINT "    The peak load is";MAXLOAD;"at ";CRUSH;"inches."
3640     PRINT
```

ClibPDF - www.fastio.com

```
3650     PRINT "    The energy absorbed at 75% crush is ";ENERGY;" ft-lbs."
3660     PRINT : PRINT :PRINT
3670      WHILE A=0
3680        COLOR 12: SOUND 988,1:SOUND 1322,1 : SOUND 745,1
3690        PRINT "Is this what you want?"
3700        AN$ = INPUT$(1)
3710        IF AN$="Y" OR AN$="y" THEN GOOD$ = "yes":A = 1
3720        IF AN$="N" OR AN$="n" THEN GOOD$ = "no" :A = 1
3730      WEND
3740    WEND
3750 RETURN
3970 REM ___________________________
3980 REM   generate pipe strength
3990 REM ---------------------------
4000     LOCATE 12,30:COLOR 24,I
4010     PRINT "THINKING"
4020     COLOR 12,0
4030     STRENGTHFACTOR(I) = STRENGTH(ABC(I))
4040     EFFLEN = LENGTH(I)
4050     IF LENGTH(I) = 48 THEN EFFLEN = LENGTH(I) + 4
4060     IF LENGTH(I)>26 AND LENGTH(I)<48 THEN EFFLEN = LENGTH(I) + 2
4070     LENFAC! = EFFLEN / 26
4080     FOR INC = 0 TO 66
4090       PIPSTREN(I,INC)= STRENGTHFACTOR(I) * LENFAC! * IMPFAC! * PIPE(BRACE(I),INC)
4100       IF INC>0 THEN STRENAVG = (PIPSTREN(I,INC)+PIPSTREN(I,INC-1))/2 ELSE STRENAVG = 0
4110       IF INC<55 THEN ENERGY = ENERGY + (STRENAVG * (.5/12) )
4120       IF INC<40 THEN IF PIPSTREN(I,INC)>MAXLOAD THEN MAXLOAD = PIPSTREN(I,INC) : CRUSH = INC/2
4130     NEXT INC
4140 RETURN
4470 REM _____________________
4480 REM input previous terminal data
4490 REM ----------------------------
4500 OPEN "i",#2,"lastrun.tbt"
4510 INPUT #2,N,STEEL
4520 FOR I = 1 TO N
4530   INPUT #2,ABC(I),BRACE(I),LENGTH(I)
4540 NEXT I
4550 CLOSE #2
4560 RETURN
4570 REM ___________________________
4580 REM    output terminal data
4590 REM ----------------------------
4600 OPEN "O",#2,"lastrun.tbt"
4610 PRINT #2,N,",",STEEL
4620 FOR I=1 TO N
4630   PRINT #2,USING"#_,#_,##.##_";ABC(I),BRACE(I),LENGTH(I)
4640 NEXT I
4650 CLOSE #2
4660 RETURN
4670 REM _____________________
4680 REM OUTPUT DATA TO PRINTER
4690 REM ----------------------
4700  LPRINT "   Segment    Gauge   Bracing     Length"
4710  LPRINT
4720  FOR I = 1 TO N
4730    LPRINT USING "      ##      \   \   \        \   ##.#";I,GAUGE$(I),ANGLE$(I),LENGTH(I)
4740  NEXT I
4750  LPRINT
4760  LPRINT
4770 RETURN
4800 CLS '---------------------------
4810 INPUT "What is the weight of the steel in the average segment";STEEL
4820 RETURN
4950 REM  ________________________________
4960 REM [                                ]
4970 REM [   Terminal Crushing subroutine ]
4980 REM [________________________________]
4990 REM
5000 FOR I=1 TO N
5010   INC(I) = 1
5020 NEXT I
```

ClibPDF - www.fastio.com

```
5030 PRINT #3,CHR$(34)+"car wt. ="+CHR$(34),CARWT,CHR$(34)+"  V0 ="+CHR$(34),V0
5040 LPRINT : LPRINT
5050 LPRINT "  car wt. =";CARWT,"  V0 =";V0
5060 PRINT #3,CHR$(34)+" time"+CHR$(34),CHR$(34)+"acceleration"+CHR$(34);
5070 LPRINT
5080 PRINT #3,CHR$(34)+"velocity"+CHR$(34),CHR$(34)+"distance"+CHR$(34)
5090 A = 0
5100 I8 = 0
5110 DIST  = 0
5120 T = 0
5130 V = V0
5140 IN = 0
5145 GOSUB 2200
5150 WHILE V>0 AND IN<66*N+1
5160   KE = V*V*CARWT/2/G
5170   WEAKINC = 100000!
5180   FOR I = 1 TO N
5190    IF INC(I)>66 THEN 5230
5200    J = INC(I) -1
5210    STRENT =.5*PIPSTREN(I,J)+.5*PIPSTREN(I,INC(I))
5220    IF STRENT <WEAKINC THEN WEAKINC = STRENT : SEGMENT = I
5230   NEXT I
5240   INC(SEGMENT) = INC(SEGMENT) + 1
5250   DE = WEAKINC*.5/12
5260   KENEW = KE-DE
5270   IF KENEW<0 THEN KENEW = 0
5280   DIST = DIST+.5/12
5290   VNEW =  SQR(2*G*KENEW/CARWT)
5300   GOSUB 7000
5310   DT = 1/(12*(V+VNEW))
5320   T = T + DT
5330   AVGACC! = (V0-VNEW)/T/G
5340   ACC! = (V-VNEW)/DT/G
5350   V = VNEW
5360   T!(IN) = T
5370   V!(IN) = V
5380   A!(IN) = ACC!
5390   D!(IN) = DIST
5400 LINE -(INT(30+T/.8*280),INT(170-ACC!*7.5)),C
5410   IF A=0 THEN IF V0*T-DIST >= 2 THEN OIV = V0-V  : A=1 :OID =DIST:OIT=T
5420   IN = IN+1
5430 WEND
5433 IN = IN-1
5435 LOCATE 1,2
5440 PRINT USING "Occupant Impact Velocity is ##.###fps";OIV : LOCATE 2,2
5450 PRINT USING "and occured at t=#.### sec and d=##.#ft";OIT,OID
5460 LPRINT "Occupant Impact Velocity is";OIV;"feet per second"
5470 LPRINT "Occupant impact occured at t=";OIT;"sec. and d=";OID;"feet."
5472 LPRINT
5475 LPRINT USING "Total penitration into terminal is ##.## feet,";DIST
5478 LPRINT USING "         using ###.#% of available crush.";DIST/(N*33/12)*100
5479 LPRINT
5480  REM
5490 REM calculate ride down acceleration
5500 GOSUB 6000
5510 LPRINT
5520 REM calculate max 50 ms acceleration
5530 GOSUB 6500
5540 REM
5550 FOR I = 0 TO IN
5560  PRINT #3,T!(I),A!(I),V!(I),D!(I)
5570 NEXT I
5575 PRINT #3,""
5577 ERASE T!,A!,V!,D!
5580 RETURN
5970 REM
5980 REM  'Ride-Down' acceleration calculation
5990 REM
6000  LOCATE 3,2 : PRINT "Calculating ride down acceleration"
6010  LOCATE 4,2 : PRINT USING "testing ---- of ####";IN
6020  RD$ = "  Ride down acceleration is ##.#g from t=#.#### to t=#.#### sec."
```

ClibPDF - www.fastio.com

```
6030  RDA = 0
6040  IT = 0
6050  WHILE T!(IT)<OIT
6060    IT = IT+1
6070  WEND
6080  FOR I=IT TO IN-1
6090  LOCATE 4,10
6100  PRINT USING "####";I
6110    IM = 1
6120    WHILE T!(IM+I)-T!(I)<.0095 AND I+IM<IN-1
6130      IM = IM+1
6140    WEND
6150    IF (V!(I)-V!(I+IM))/(T!(IM+I)-T!(I)) <=RDA THEN 6190
6160     RDT1 = T!(I)
6170     RDT2 = T!(I+IM)
6180     RDA = (V!(I)-V!(I+IM))/(T!(IM+I)-T!(I))
6190  NEXT I
6200 RDA = RDA/G : LOCATE 6,2
6210  PRINT USING RD$;RDA,RDT1,RDT2
6220  LPRINT USING RD$;RDA,RDT1,RDT2
6230 RETURN
6470 REM
6480 REM  50 ms average acceleration calculation
6490 REM
6500  LOCATE 3,2
6505  PRINT "Calculating max. 50 ms average      " : LOCATE 4,2
6510  PRINT USING "testing    0 of ####";IN
6520  RDA = 0
6530  MX50$ ="  Maximum 50 ms acceleration is ###.#g from t=#.#### to t=#.####."
6540  FOR I=0 TO IN-1
6550 LOCATE 4,10
6560 PRINT USING "####";I
6570    IM = 2
6580    WHILE T!(IM+I)-T!(I)<.0495 AND I+IM<IN-1
6590      IM = IM+1
6600    WEND
6610    IF (V!(I)-V!(I+IM))/(T!(IM+I)-T!(I)) <=RDA THEN 6650
6620     RDT1 = T!(I)
6630     RDT2 = T!(I+IM)
6640     RDA = (V!(I)-V!(I+IM))/(T!(IM+I)-T!(I))
6650  NEXT I
6660  RDA = RDA/G
6665  LOCATE 8,2
6670  PRINT USING MX50$;RDA,RDT1,RDT2
6680  LPRINT USING MX50$;RDA,RDT1,RDT2
6690 RETURN
6990 REM calculate change in velocity using conservation of momentum
7000 IF I8>=N*66-1 THEN RETURN
7020 I8 = I8+1
7030 ON VAL(LEFT$(GAUGE$(INT(I8/66)+1),2))/2-5 GOSUB 7070,7090,7110
7040 VNEW = CARWT*VNEW/(WT2+CARWT)
7050 CARWT = CARWT + WT2
7060 RETURN
7070 WT2 = (49/12*LENGTH(INT(I8/66)+1)+STEEL)/66
7080 RETURN
7090 WT2 = (36/12*LENGTH(INT(I8/66)+1)+STEEL)/66
7100 RETURN
7110 WT2 = (29/12*LENGTH(INT(I8/66)+1)+STEEL)/66
7120 RETURN
8990 REM !!!!!!!!!!!!!!!!!!! error traps !!!!!!!!!!!!!!!!!!!!!
9000 SOUND 111,5 : SCREEN 0,0 : COLOR 28
9010 IF ERR = 71 THEN CLS : LOCATE 12,5 :PRINT "Insert disk in drive A:":LOCATE 15,5 : PRINT "Press any key to
continue" : X$=INPUT$(1) : COLOR 12 : RESUME
9020 IF ERR=72 THEN CLS:LOCATE 11,8 : PRINT "disk in drive A: not of compatable format" : PRINT "        Insert
a properly formatted disk." :LOCATE 15,5 :PRINT "press any key to continue":X$=INPUT$(1): COLOR 12 : RESUME
9030 IF ERR=67 OR ERR=61 THEN CLS : PRINT "Disk capacity has been exceeded on drive A.":LOCATE 12,5:PRINT
"Insert a new disk in drive A and rerun model.":CLOSE:STOP
9040 IF ERR=64 AND ERL=1500 THEN PRINT "Bad file name specified!!" : PRINT TAB(20),"try again....":TITLE$="" :
COLOR 12 : RESUME 1350
9050 IF ERL=4000 THEN COLOR 24,I-15 : RESUME NEXT
9060  IF  ERR  =  27  THEN  PRINT  "Out  of  paper  or  printer  not  connected":PRINT  "press  any  key  when
```

ClibPDF - www.fastio.com

```
ready":X$=INPUT$(1):CLS:COLOR 12 : RESUME
9070 IF ERR = 62 AND ERL = 4530 THEN N = 0 : CLOSE #2 : COLOR 12 : RESUME 4560
9075 IF ERR = 53 AND ERL = 4500 THEN COLOR 12 : RESUME 4560
9080 PRINT "error code =",ERR ,"at line",ERL
9090 ERROR 100
9100 KEY ON
RR = 53 AND ERL = 4500
```

ClibPDF - www.fastio.com

ClibPDF - www.fastio.com