D-4-10

STATE OF CALIFORNIA
HIGHWAY TRANSPORTATION AGENCY
DEPARTMENT OF PUBLIC WORKS
DIVISION OF HIGHWAYS

STRESS LOSSES IN HIGH STRENGTH STRAND IN A PRESTRESSED PRETENSIONED CONCRETE I GIRDER

A Study Made by the California Division of Highways in Cooperation with the U.S. Dept. of Commerce, Bureau of Public Roads

65-05

April, 1965

ClibPDF - www.fastio.com

State of California
Department of Public Works
Division of Highways
Materials and Research Department

April 1965

19601 - 300179
Proj. W. O. 63320--R

Mr. J. C. Womack
State Highway Engineer
Calif. Division of Highways
Sacramento, California

Dear Sir:

Submitted for your consideration is a report of:

STRESS LOSSES IN HIGH STRENGTH STRAND

IN

A PRESTRESSED PRETENSIONED CONCRETE I GIRDER

Instrumentation performed by . . . Structural Materials Section
Under direction of . . . . . E. F. Nordlin
Work supervised by . . . . . J. E. Barton, W. Chow, J. R. Stoker, and W. E. Faist
Report prepared by . . . . . A. Sequeira and F. Myhres

Very truly yours,

JOHN L. BEATON
Materials and Research Engineer

AS/FM:mw

ClibPDF - www.fastio.com

INTRODUCTION

The object of this investigation was to evaluate the stress loss in pretensioned high strength prestressing strands during the curing of the concrete, after the strand was detensioned, and after stress loss reached an equilibrium condition. This investigation was initiated by the Structural Materials Section of the Materials and Research Department and conducted at, and in cooperation with, Delta Prestress Concrete, Inc. at Sacramento, California.

Three I-girders being fabricated for Contract No. 041904, 10-SJ-99 (old number 63-10T13C20-F, X-SJ-4-C) were used for this study. These prestressed pretensioned girders were 99'-4" long and 4'-0" deep. The prestress steel in each girder consisted of 14 straight and 12 harped ½" 7-wire high strength strands. During fabrication load cells, strain gages, and thermocouples were installed in the test girders. Strain and load were recorded from initial stressing until the girders were in place at the bridge site. Temperature was recorded continuously from concrete pour until the girder cooled to ambient temperature.

This work was accomplished in cooperation with the U. S. Bureau of Public Roads.

ClibPDF - www.fastio.com

SUMMARY AND CONCLUSIONS

For the high strength (270 Ksi) ½" 7-wire strand used in this research project, the steel relaxation or creep for a 90 hour period on two strands was 7.6% and 5.9% for a maximum loss of 14,000 psi compared to a recommended allowance of 6,000 psi.

The loss due to elastic shortening was a maximum of 1.8 Kips or 11,500 psi as compared to a recommended allowance of 12,000 psi.

The maximum final total loss in stress after 53 days was 36,000 psi which compares very favorably with a recommended allowance of 35,000 psi. However, as creep in the concrete progresses for up to about 4 years, further stress loss could be expected. Previous research on creep in concrete has shown that about 50% of the creep occurs within the first 2 or 3 months. Therefore, it would be reasonable to expect an additional loss of about 5,000 psi.

It is recommended that further research be conducted for this type of construction to further verify the results of this investigation and determine if sufficient allowance for losses is being made for the type of strand herein used. Any additional similarly conducted projects should include further instrumentation such as Carlson strain meters for concrete strain determinations, more numerous strain gages with improved installation techniques, and additional thermocouples to obtain a complete temperature history.

ClibPDF - www.fastio.com

TEST PROCEDURE

An experimental strand was placed in each of the test girders. In addition to a load cell at each end and at mid-span, four strain gages were cemented to the strand surface. Thermocouples, placed at various locations in the girder and stressing bed and connected to a 20 point recorder, provided a continuous temperature record.

Strain and load readings were taken before stressing (zero load and strain), after stressing, after the strands were locked in place, and at two hour intervals until the strands were detensioned. Immediately after detensioning, another set of readings was recorded and then the girder was removed from the bed and placed in storage. Further readings were taken until the strain and load remained constant. Readings were then taken at various intervals, with the final values recorded after the girders were in place at the bridge site.

ClibPDF - www.fastio.com

STRAIN GAGE INSTALLATION

Four strain gages were attached to the surface of each of the experimental strands. Due to their small size (0.25" x 0.025"), Baldwin Fan-25-12, S6-L strain gages were used.

The wire surface at each location was sanded with grit paper (#180) and then washed clean with acetone. A strain gage was cemented to the wire with EPY-150 epoxy (Fig. 1). After the epoxy cured for 4 hours, Belden type 8434 plastic insulated 4-conductor lead wires were attached to the strain gage.

A waterproofing epoxy compound was applied to the strain gage and leads. A MIBK primer solution was used on the plastic insulation of the lead wires to insure adherence of the epoxy. The waterproofing epoxy was a two-part epoxy-Thiokol mixture; one part of Mixture #1 was combined with two parts of Mixture #2. Constituents of the mixtures were as follows:

Mixture #1

Shell Epon Resin 828	91.0%
Cab-O-Sil, Uncompressed	9.0%

Mixture #2

Thiokol LP-3	86.8%
DMP-30	5.1%
Cab-O-Sil, Uncompressed	8.1%

The resulting compound cured to a solid elastic material. The completed gage installations were placed in water for 24 hours to check the effectiveness of the waterproofing.

ClibPDF - www.fastio.com

LOAD CELL CONSTRUCTION

All of the load cells used in this investigation were designed and fabricated by the Materials and Research Department. The load cells had a maximum design capacity of 34,000 pounds with an accuracy of ± 1% of full scale, and were readable to ± 50 pounds.

Figure 2 shows one of the load cells which was installed at mid-span in the experimental strands. The load cells were waterproofed in the same manner as the strain gages.

ClibPDF - www.fastio.com

DISCUSSION

The following discussion describes instrument installation and the accumulation and reduction of raw data for this investigation.

The individual prestress strands had a minimum guaranteed ultimate strength of 41,300 lb. and were initially stressed to 32,400 lb. (78% of ultimate). During the jacking operation, the strands were locked off at approximately 70% of ultimate strength. One harped strand was instrumented in each of the three test girders (Figure 3). Each experimental strand was cut so that a load cell could be spliced into the strand at mid-span. Since girder instrumentation varied slightly, each of the three test girders (A, B, and C) will be discussed individually. Figure 4 shows a girder with all strands positioned and stressed.

Girder A

Strain gages were placed on the test strand at locations 1-A, 2-A, 3-A, and 4-A (Figure 8). After both halves of the strand were positioned in the girder bed, a load cell was inserted at the center to splice the strand halves together. Supreme brand strand chucks #660XX were used to form a connection between the strand and load cell (Figure 2). Load cells were also placed at each end of the strand (Figure 5).

Prior to stressing, a set of zero readings was recorded. The strand was then stressed from one end with a hydraulic jack. After the strand was locked-off, another set of load and strain readings was recorded. A shield was placed around the mid-span load cell to prevent concrete from adhering to the load cell (Figure 6). Figure 9 is a tabulation of the recorded load and strain measurements on Girder A.

Temperature measuring devices (thermocouples) were placed at each strain gage location and at various other locations in the girder (Figure 8). The thermocouples were connected to a continuous temperature recorder. Temperature records for Girder A are shown in Figure 10.

After stressing was complete, the girder was cast and then covered with tarpaulins. Steam curing commenced after a period of 3 to 4 hours and continued until the concrete attained a minimum compressive strength of 4,000 psi. Load readings were recorded at two hour intervals until the strand was detensioned. After detensioning, mid-span load readings were recorded periodically until the girder was moved to the bridge site. A final set of readings was obtained after the girder was positioned in place on the bridge

ClibPDF - www.fastio.com

piers and before the deck was poured. Figure 11 illustrates the change in load and temperature with respect to time.

Strain gage readings taken after initial stressing were found to be well below the calculated strain of 7000 microinches per inch. At this time it was theorized that the glue line between the strain gage and the steel cracked due to the high strain. There was further evidence of this cracking from readings taken after the concrete was cast. These readings were therefore discontinued.

Girder B

The locations of the strain gages, load cells, and thermocouples in the girder and stressing bed for Girder B are shown in Figure 12. The data recorded for Girder A indicated stress losses higher than had been anticipated. Since it was felt that temperature might be the contributing factor, thermocouples were placed at various locations on the stressing bed for Girder B. In addition, points on the girder and bed were checked for vertical and horizontal movement. These point measurements (see Figure 16 for point locations) are tabulated in Figure 17 for Girders B and C.

A set of zero strain and load readings were taken before stressing. During the stressing operations, the hydraulic jack was held at full stress load while a set of readings was recorded. A difference of 2.2 Kips was recorded for the load cells located at the strand ends (Figure 13). This difference represents a friction loss of 6.7% from the jacking end to the anchor end. The strand was then locked off at a load of 28.8 Kips. This was a loss of 3.6 Kips at the jacking end. As in the case of Girder A, the strain gages failed due to high strains.

After the concrete reached a compressive strength of 4000 psi, steam curing was discontinued and the tarpaulins were removed. In an effort to determine why stress loss occurred prior to detensioning, load readings were taken at five minute intervals for the following hour. It was observed that the stressing bed cooled rapidly in comparison to the girder and, thus, decreased in length. As the length of stressing bed decreased, a corresponding decrease was noted in the load cell readings. A tabulation of loads and strains recorded for Girder B is shown on Figure 13. Temperature records for Girder B are tabulated in Figure 14. Figure 15 shows a graph of load and temperature versus time. Included in this figure is an expanded graph covering the hour period subsequent to turning off the steam and removing the tarpaulins.

Girder C

Figure 18 shows the location of the load cells and thermocouples used in Girder C. The mid-span load cell was not covered with a shield (Figure 7) nor were strain gages installed on the strand.

ClibPDF - www.fastio.com

When the jack was maintained at full stress load, load readings indicated a difference of 2.3 Kips across the girder. This amounts to a friction loss of 7.1% from jacking end to anchor end. A loss of 3.0 Kips was indicated at the jacking end during strand lock-off. The load and strain measurements recorded for Girder C are shown in Figure 19.

Temperature records for approximately 21 hours are contained in Figure 20. This increased curing time is the result of lower curing temperatures. The temperature recorder was inadvertently turned off after 21 hours, resulting in incomplete records.

Figure 21 shows a graph of load and temperature versus time for Girder C.

ClibPDF - www.fastio.com

CONCLUDING DISCUSSION

At the time this research project was initiated, it was not anticipated or realized that the readings obtained from the embedded load cell would have to be corrected for the difference in area of the load cell and strand once the steel became composite with the concrete. After observations of the readings it became obvious that such a correction was necessary. The validity of the correction that was employed appears to be substantiated by comparing the results of the embedded load cell with those obtained from the end load cells. As can be observed from the graphs of load versus time, the curve of the embedded cell is approximately parallel to, and midway between, the curves for the end cells. However, after the strands are released, the corrected mid-span readings continued to show as much as a 4% increase in load. This phenomenon cannot be explained. It was either due to inaccuracies in our correction or to some obscure temperature differential. The calculations to determine the corrected mid-span loads are shown on pages 12 through 17.

As can be observed from the curves of load versus time, some very interesting and unusual variations in load occur during the curing cycle which in a general way can be attributed to differential expansion of the stressing bed and the girder system. The stressing bed utilized for this project was one end of a 400' continuous structural steel bed mounted on concrete piers at 20 foot centers. This explains why the free end of the bed (the right end of the bed as portrayed in the drawings) exhibited much more movement than the interior end of the bed.

As can be noted from Figures 9, 13, and 19, there is a considerable loss in load at the anchored ends of the strand once the steam is turned off and the tarpaulins are removed, which is due to the rapid cooling of the bed. This is akin to releasure of the strands. Therefore to maintain losses to a minimum, the steam curing cycle should progress until the concrete reaches the required strength.

One of the aims of this research was to determine the stress relaxation in the strand itself. However, due to the variations in load caused by temperature, it was not possible to isolate this loss. For this reason a separate creep study was conducted on two strands placed in an empty bed. See page 11 for a discussion of this study.

ClibPDF - www.fastio.com

LOAD CELL FATIGUE TEST

All of the load cells used for this investigation were subjected to a constant load of 29,000 lb. in a universal testing machine for approximately five days.

The purpose of this pre-use test was to detect creep in the load cell steel or in the strain gage cemented to the load cell. A maximum variation of 40 lb. or 0.14% was recorded.

ClibPDF - www.fastio.com

STRAND CREEP LOSS TEST

Two strands, one normal and one with a load cell at mid-span, were tested in a 96 ft. stressing bed (Figures 22 through 25). These strands were locked off at approximately 29,000 lb. Reference points on the strand near the anchoring chucks indicated that no slippage occurred in the chucks. To determine the effect of steam and heat on creep loss, the strands were covered and subjected to 24 hours of steam.

Figure 26 is a tabulation of the loads recorded in the two test strands. Figure 27 is a record of the temperatures periodically registered on thermocouples installed at various points on and about the test strands.

Figure 28 is a plotting of the load and temperature versus time recorded for the two test strands.

This study indicated that the high strength (270 K) ½" 7-wire strand used showed a steel relaxation or creep for a 90 hour period of 7.6% and 5.9% with a maximum loss of 14,000 psi compared to a recommended allowance of 6,000 psi.

ClibPDF - www.fastio.com

CALCULATIONS

A correction factor was employed to determine the actual load in the test strand at mid-span. This correction factor was not used until the curing concrete began to obtain strength and bonding power. When the bonding began to take place, the whole mass of concrete acted as a unit and began to shrink, thus decreasing the strain in the load cell and the strand at the same rate. Since the load measured by the load cell is a function of strain output, and since the strain on the load cell is considerably less than the strain on the strand, the load indicated on the load cell would be less than true load (or the load on the strand). Thus, a correction factor had to be used as soon as the concrete had any bonding strength. The actual time that the concrete began bonding to the strand was determined by plotting a graph of indicated load versus time. This time was established by noting when the graph showed a sharp decrease in load. The remaining load was determined as follows:

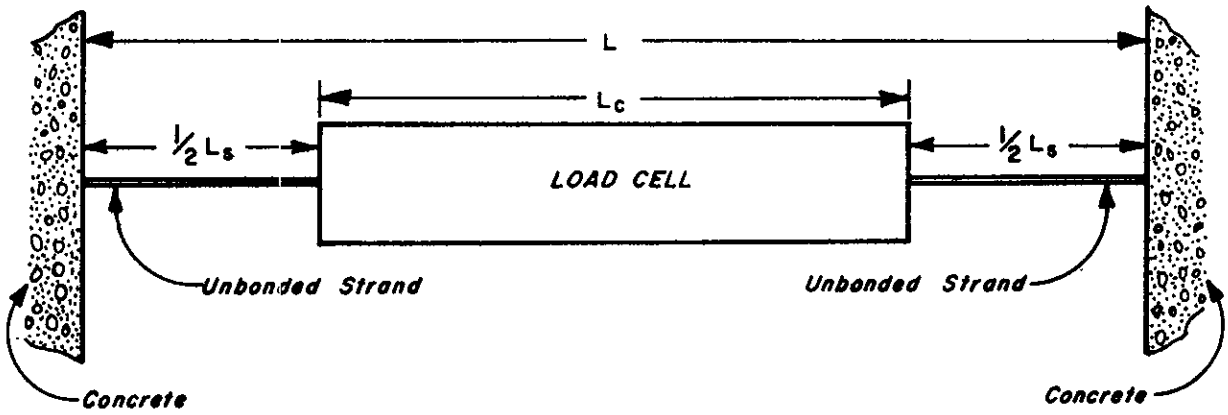

Refer to the diagram above:

P = Indicated load cell load just prior to concrete bonding to strand.

E = Modulus of elasticity of strand.

A_s = Cross sectional area of the strand.

L_c = Length of load cell and anchoring chucks.

L_s = Length of unbonded strand due to shield over the load cell.

S_i = Initial strain in the strands just prior to concrete bonding to strand.

ClibPDF - www.fastio.com

S_{ci} = Initial strain in the load cell prior to concrete bonding to strand.

S_{co} = Strain left in the load cell.

S_{so} = Strain left in the strand.

S_o = Strain left in the bonded strand.

L = Total unbonded length.

P_r = Load left in the strand.

By definition $\frac{\text{stress}}{\text{strain}}$ = modulus of elasticity and stress = $\frac{\text{load}}{\text{area}}$. Therefore, strain = $\frac{\text{load}}{\text{area x modulus of elasticity}}$

or $S = \frac{P}{A \times E}$. Since the unbonded portion of the strand and the load cell have the same load, then their strains are proportional. Knowing the initial strain and the strain left on the load cell, we can derive the equation:

$$\frac{S_{co}}{S_{ci}} = \frac{S_{so}}{S_i} \text{ or } S_{so} = \frac{S_{co}}{S_{ci}} \times S_i$$

$$\text{but } S_i = \frac{P}{A \times E} \quad \text{therefore } S_{so} = \frac{S_{co}}{S_{ci}} \times \frac{P}{A \times E}$$

change in load cell length $\Delta L_c = L_c\ (S_{ci} - S_{co})$

change in unbonded strand length $\Delta L_s = L_s\ (S_i - S_{so})$

substitute in the last equation for S_i and S_{so}

$$\Delta L_s = L_s \left(\frac{P}{A \times E} - \frac{S_{co}}{S_{ci}} \times \frac{P}{A \times E}\right)$$

$$\text{or } \Delta L_s = \frac{L_s \times P}{A \times E} \left(1 - \frac{S_{co}}{S_{cs}}\right)$$

therefore:

$$\Delta L = \Delta L_c + \Delta L_s = L_c\ (S_{ci} - S_{co}) + \frac{L_s P}{A \times E} \left(1 - \frac{S_{co}}{S_{ci}}\right)$$

$$S_o = S_i - \frac{\Delta L}{L}$$

$$\text{Load left in strand } P_r = \frac{S_o}{S_i} \times P$$

ClibPDF - www.fastio.com

Substituting for S_o

$$P_r = \left(\frac{S_i - \Delta L/L}{S_i}\right) \times P$$

$$P_r = P - \left[\frac{A \times E \times L_c \, (S_{ci} - S_{co}) + L_s \times P \left(1 - \frac{S_{co}}{S_{ci}}\right)}{L}\right]$$

This is the equation used to determine the load remaining on the strand based on the above calculations and assumptions. In this test a modulus of elasticity of 27×10^6 pounds per square inch was assumed.

ClibPDF - www.fastio.com

GIRDER A

P = 29,100 pounds

A = .156 square inches

E = 27×10^6 pounds per square inch

L_c = 11 inches

L_s = 3 inches

L = 11 + 3 = 14 inches

S_{ci} = 1590×10^{-6} inches per inches

S_{co} = Strain on load cell at the load to be determined (inches per inch)

P_r = Corrected load left in the strand in pounds

$$P_r = P \left[\frac{A \times E \times L_c \, (S_{ci} - S_{co}) + L_s \times P \left(1 - \frac{S_{co}}{S_{ci}}\right)}{L} \right]$$

$$P = 29{,}100 - \left[\frac{.156 \times 27 \times 10^6 \times 11 (1590 \times 10^{-6} - S_{co}) + 29{,}100 \times 3 \left(1 - \frac{S_{co}}{1590 \times 10^{-6}}\right)}{14} \right]$$

$$P_r = 17{,}602 + 7.232 \times 10^6 \, S_{co}$$

This is the formula used to calculate the loads at mid-span in Girder A.

ClibPDF - www.fastio.com

GIRDER B

P = 28,900 pounds

A = .156 square inches

E = 27×10^6 pounds per square inch

L_c = 11 inches

L_s = 3 inches

L = 11 + 3 = 14 inches

S_{ci} = 1617×10^{-6} inches per inch

S_{co} = Strain on load cell at the load to be determined (inches per inch)

P_r = Corrected load left in the strand in pounds

$$P_r = P - \left[\frac{A \times E \times L_c\ (S_{ci} - S_{co}) + L_s \times P\ (1 - \frac{S_{co}}{S_{ci}})}{L}\right]$$

$$P_r = 28{,}900 - \left[\frac{.156 \times 27 \times 10^6 \times 11 (1617 \times 10^{-6} - S_{co}) + 28{,}900 \times 3 (1 - \frac{S_{co}}{1617 \times 10^{-6}})}{14}\right]$$

$$P_r = 17356 + 7.14 \times 10^6\ S_{co}$$

This is the formula used to calculate the loads at mid-span in Girder B.

ClibPDF - www.fastio.com

GIRDER C

P = 28,100 pounds

A = .156 square inches

E = 27×10^6 pounds per square inch

L_c = 11 inches

L_s = 0

L = 11 + 0 = 11 inches

S_{ci} = 1412×10^{-6} inches per inch

S_{co} = Strain on load cell at the load to be determined (inches per inch)

P_r = Corrected load left in the strand in pounds

$$P_r = P - \left[\frac{A \times E \times L_c\ (S_{ci} - S_{co}) + L_s \times P\ (1 - \frac{S_{co}}{S_{ci}})}{L}\right]$$

$$P_r = 28{,}100 - \left[\frac{.156 \times 27 \times 10^6 \times 11\ (1412 \times 10^{-6} - S_{co}) + 0}{11}\right]$$

$$P_r = 22{,}153 + 4.212 \times 10^6\ S_{co}$$

This is the formula used to calculate the loads at mid-span in Girder C.

ClibPDF - www.fastio.com

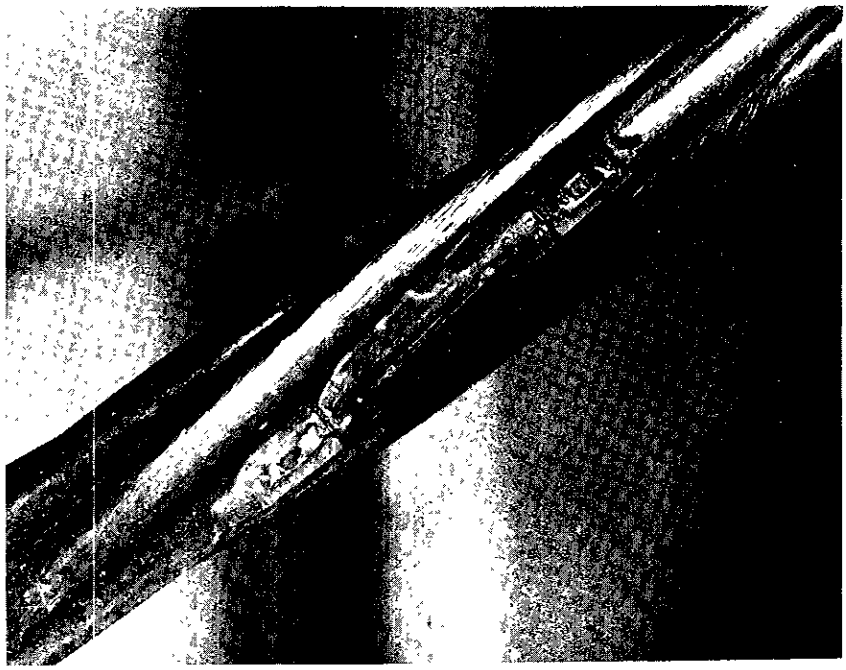

FIGURE 1

Strain gage on wire of prestressing strand.

FIGURE 2

Load cell and splicing chucks.

ClibPDF - www.fastio.com

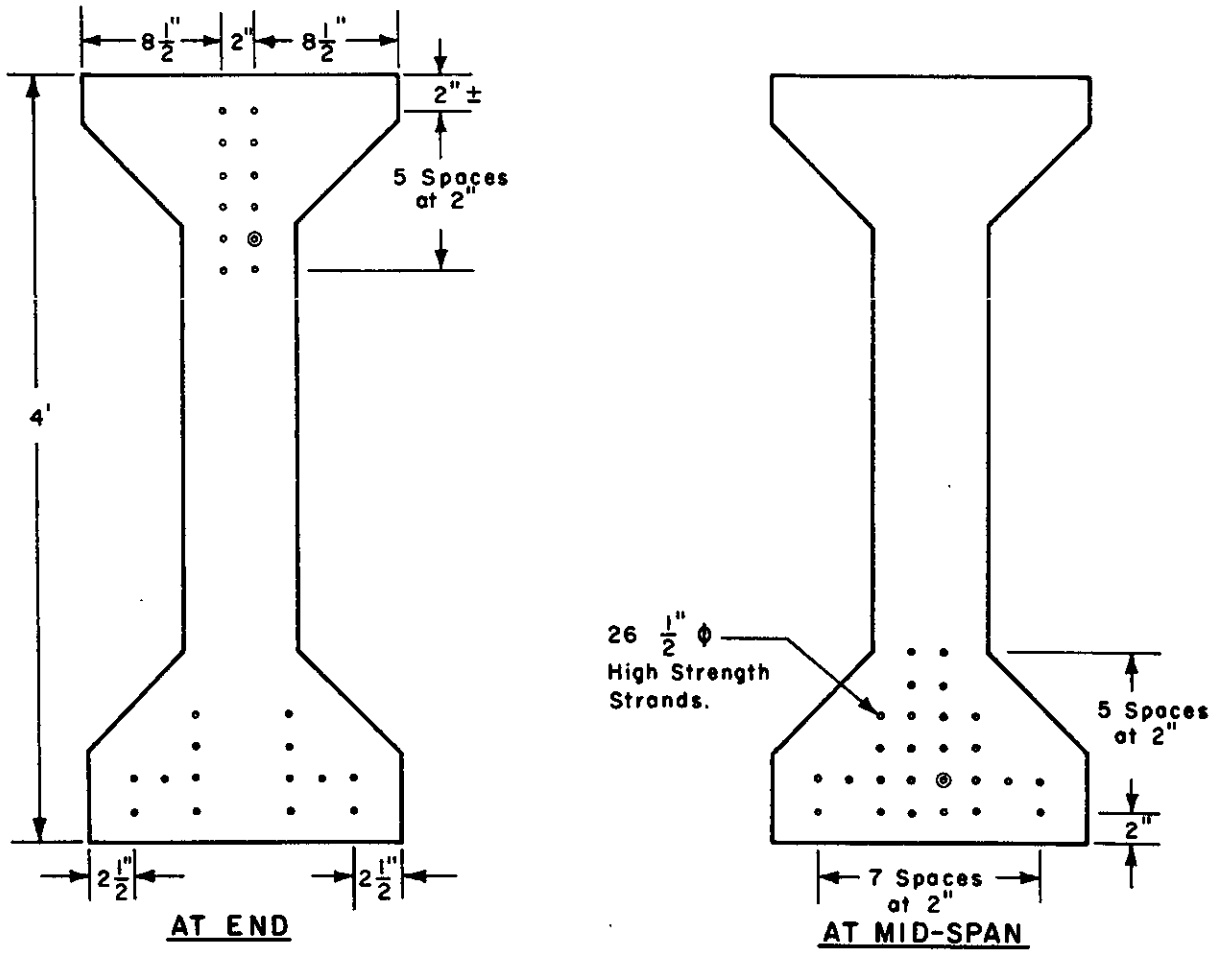

EXPLANATION

- ∘ Indicates strand location
- ◎ Instrumented strand

NO SCALE

CROSS SECTION OF I GIRDER

FIGURE 3

ClibPDF - www.fastio.com

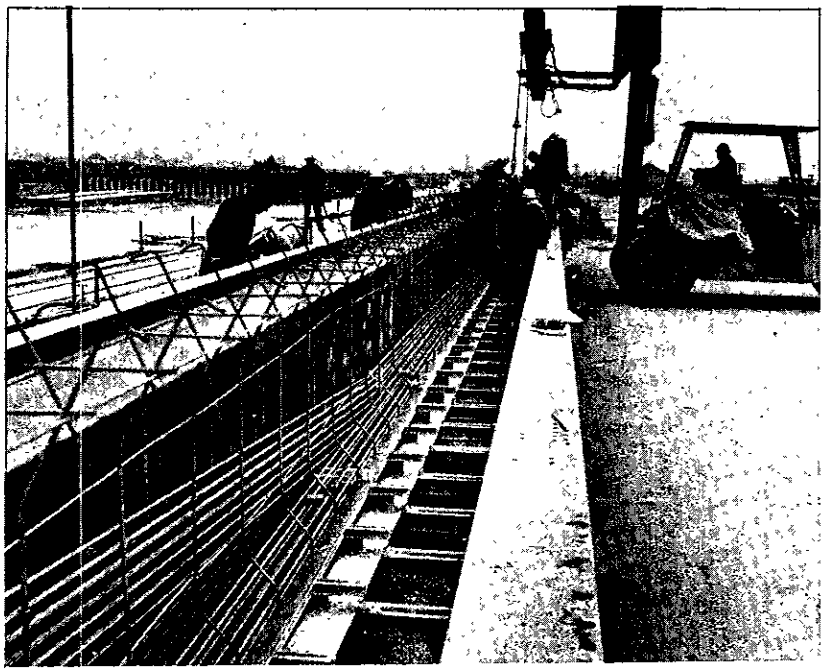

FIGURE 4

General view of girder with strands positioned.

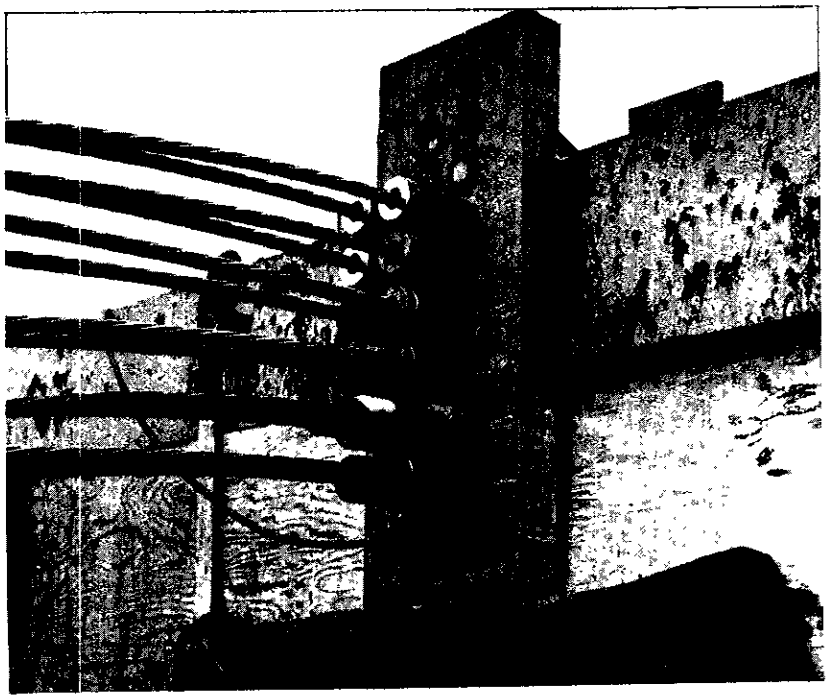

FIGURE 5

Load cell used at one end.

ClibPDF - www.fastio.com

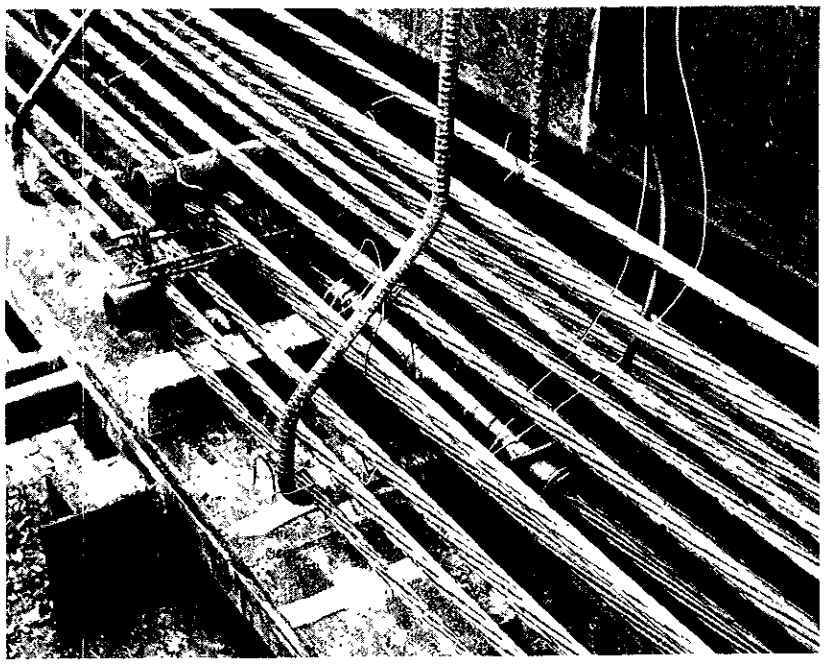

FIGURE 6

Load cell at mid-span with shield.

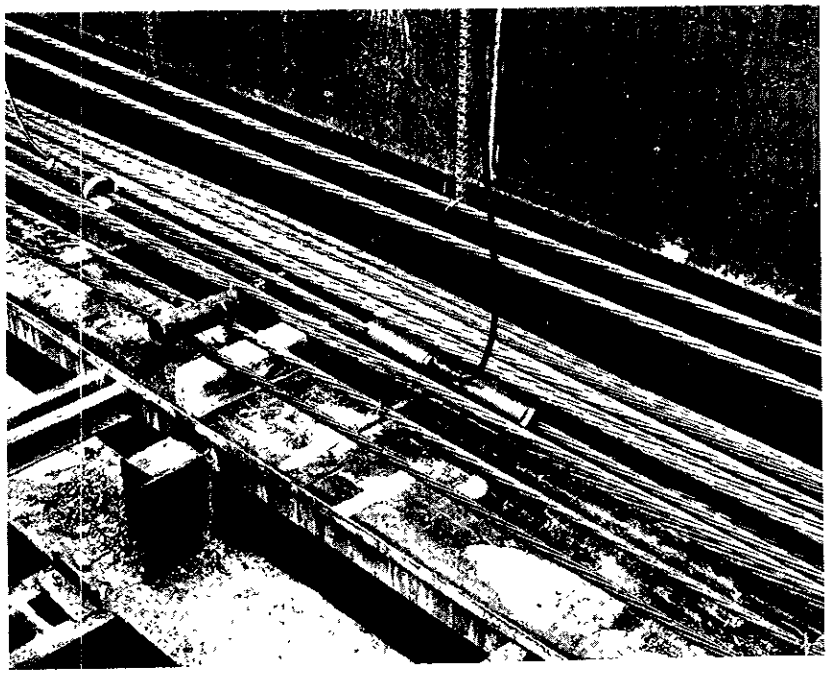

FIGURE 7

Load cell at mid-span without shield.

ClibPDF - www.fastio.com

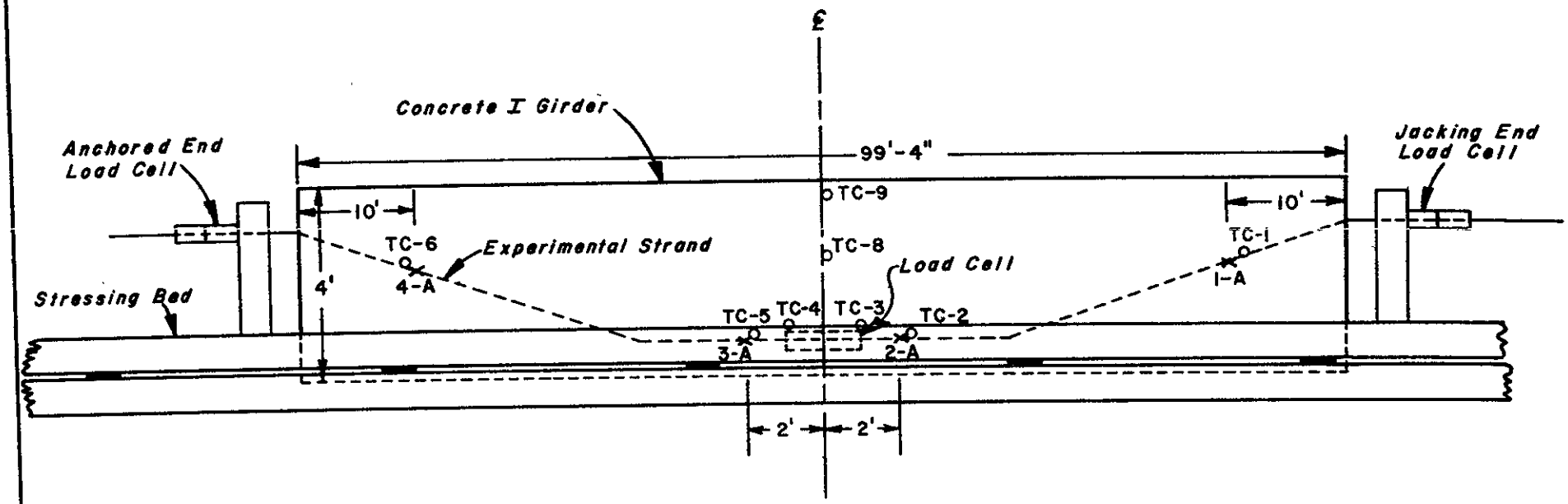

EXPLANATION

TC- Thermocouple
o TC-1,2,5 & 6-Temperature on Experimental Strand
o TC-3,4-Temperature on Load Cell
TC-7- Temperature Under Tarp During Curing Cycle
o TC-8-Temperature in Girder Web at Mid-Span
o TC-9-Temperature 2" from Top Surface of Girder
× Indicates Strain Gage Location on Strand

NO SCALE

GIRDER A

FIGURE 8

GlibPDF - www.fastio.com

FIGURE 9

GIRDER A LOAD AND STRAIN MEASUREMENTS

Date	Time	Anchored End (Kips)	Jacked End (Kips)	Load Cell Strain at Mid-Span Microinches	Load at Mid-Span Kips	1-A Strain	2-A Strain	3-A Strain	4-A Strain	Remarks
12-26-63	1200	0	0	0	0	0	0	0	0	
	1315	30.3	29.0		- -	- -	- -	- -	- -	After jack is released.
	1330	29.8	28.6	1637	30.0	4405	6035	5675	6445	
	1500	28.9	28.3	1590	29.1	- -	- -	- -	- -	Pour commenced.
	1830	28.7	28.1	1590	29.1	- -	- -	- -	- -	Concrete poured.
	1930	28.6	28.3	1607	29.5	- -	- -	- -	- -	Steam on.
	2100	28.5	28.3	1560	28.9					
	2300	28.1	28.0	1483	28.3					
12-27-63	0100	27.4	27.5	1398	27.7					
	0300	27.0	27.1	1344	27.3					
	0500	26.5	26.7	1313	27.1					
	0700	26.3	26.1	1294	27.0					
	0900	26.8	27.3	1302	27.0					
	1100	26.7	27.3	1279	26.9	- -	- -	- -	- -	Steam off.
	1300	22.6	22.8	1179	26.1	- -	- -	- -	- -	Forms off.
	1320	0	0	1035	25.1	- -	- -	- -	- -	Strands released.
	1400			1025	25.0					
	1600			1044	25.2					
	2000			1075	25.4					
12-28-63	1000			1140	25.9					
	1400			1148	25.9					
	1800			1144	25.9					
12-29-63	1000			1158	26.0					
	1600			1148	25.9					
12-30-63	0900			1148	25.9					
	1530			1148	25.9					
12-31-63	0900			1148	25.9					
1-2-64	1100			1148	25.9					
1-8-64	1300			1144	25.9					
1-10-64	1100			1137	25.8					
1-13-64	1100			1140	25.8					
1-17-64	1300			1121	25.7					
1-22-64	1300			1129	25.8					
1-24-64	1000			1129	25.8					
2-4-64	0900			1113	25.7					
2-28-64	1000			1079	25.4	- -	- -	- -	- -	Girder moved to bridge site and positioned.

ClibPDF - www.fastio.com

FIGURE 10

GIRDER A TEMPERATURES (° F)

Date	Time	TC-1	TC-2	TC-3	TC-4	TC-5	TC-6	TC-7	TC-8	TC-9
12-26-63	1800	59		58	58	59	58	54	58	58
	1900	65		62	62	63	63	90	63	64
	2000	71		67	67	70	69	101	70	74
	2100	81		79	79	82	79	110	84	88
	2200	91		91	91	95	89	117	98	102
	2300	101		105	105	107	99	122	111	116
	2400	110		120	120	121	110	128	124	127
12-27-63	0100	113		127	127	127	115	130	128	131
	0200	115		132	132	132	119	134	130	134
	0300	115		135	135	135	121	136	132	136
	0400	116		138	138	138	123	138	133	137
	0500	117		139	139	139	125	142	134	138
	0600	118		140	140	140	125	142	134	134
	0700	118		140	140	140	126	144	134	139
	0800	117		140	140	140	127	146	134	138
	0900	119		140	140	142	126	146	135	140
	1000	122		141	141	143	127	148	140	143
	1100									
	1200									
	1300									
	1400									
	1500	92		132	132	130	106		110	115
	1600	87		122	122	120	101		100	105
	1700	81		116	116	112	95		95	98
	1800	76		110	109	106	88		80	90
	1900	70		103	102	100	82		77	83
	2000	67		98	98	95	78		73	78
	2100	63		93	93	88	74		71	74
	2200	61		87	87	83	72		70	71
12-27-63	2300	59		82	82	76	67		66	67
	2400	58		78	77	75	65		63	65
12-28-63	0100	55		75	74	73	64		62	63
	0200	54		71	70	70	61		60	60
	0300	52		69	68	67	60		59	59
	0400	52		67	66	66	60		58	58
	0500	51		65	64	64	60		57	57
	0600	50		62	62	61	57		55	55
	0700	48		60	60	59	55		54	54
	0800	48		59	59	58	55		54	54
	0900	47		57	57	57	54		52	52
	1000	47		56	56	55	53		50	50
	1100	44		55	54	53	52		45	46
	1200	46		52	52	52	52		45	45
	1300	48		50	50	50	50		46	46
	1400	43		51	51	51	51		47	47
	1600	50		53	53	53	53		48	48
	1800	50		53	53	53	53		47	47
	2000	49		51	51	51	51		45	45
	2200	48		49	49	49	49		43	43
	2400	48		50	50	50	50		44	44
12-29-63	0300	50		50	50	50	50		50	50
	0600	44		50	50	50	50		47	47
	1000	48		48	48	48	48		46	46
	1600	48		47	47	47	47		44	44
12-30-63	0900	46		45	45	45	45		42	42

- No recording.

See Figure 8 for TC locations.

ClibPDF - www.fastio.com

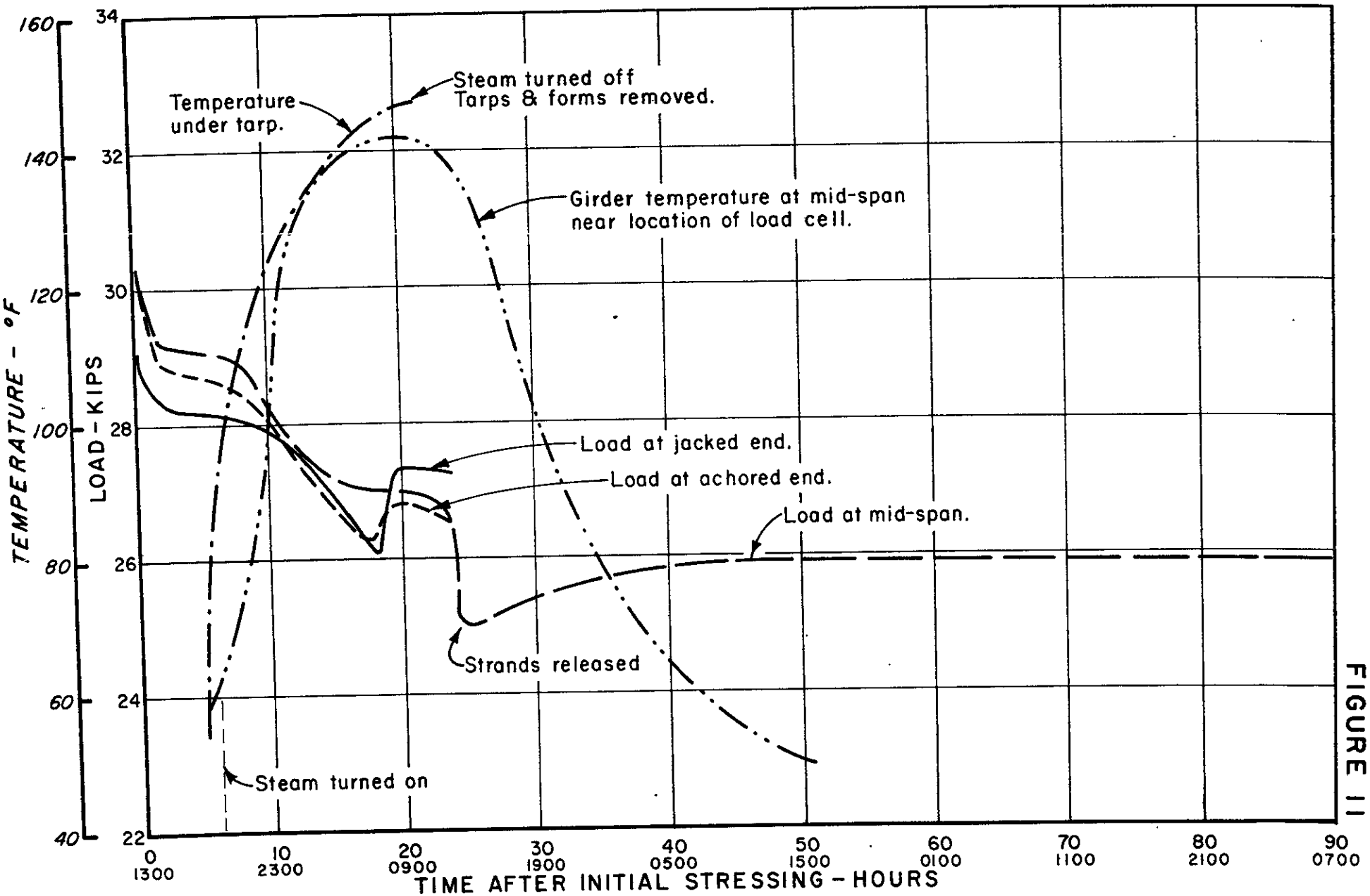

FIGURE 11

STRAND LOAD CHARACTERISTICS IN GIRDER A

ClibPDF - www.fastio.com

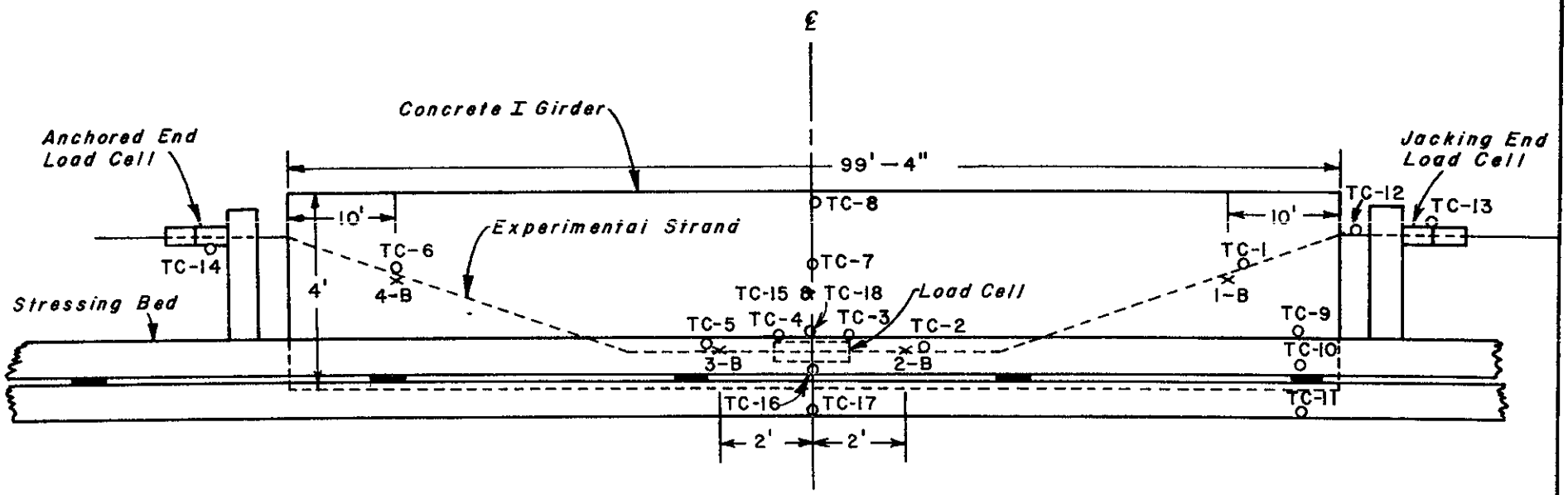

EXPLANATION

TC – Thermocouple

- o TC-1,2,5,6, & 12 – Temperature on Experimental Strand
- o TC-3,4,13, & 14 – Temperature on Load Cells
- o TC-7 – Temperature in Girder Web at Mid-Span
- o TC-8 – Temperature 2" from Top Surface of Girder
- o TC-9,10,11,15,16,17, & 18 – Temperature on the Flanges of the Stressing Bed I Beams

TC-19 – Temperature Under Tarp During Curing Cycle

TC-20 – Outside Air Temperature

× Indicates Strain Gage on Strand

NO SCALE

GIRDER B

FIGURE 12

ClibPDF - www.fastio.com

GIRDER B LOAD AND STRAIN MEASUREMENTS

Date	Time	Anchored End (Kips)	Jacked End (Kips)	Load Cell Strain at Mid-Span Microinches	Load at Mid-Span (Kips)	1-B Micro-inches	2-B Micro-inches	3-B Micro-inches	4-B Micro-inches	Remarks
1-6-64	1215	0	0							
	1225	30.2	32.4	1760	31.3	- -	- -	- -	- - -	Before jack is released.
	1225	30.1	28.8	1688	30.1	5020	5800	5200	5610	After jack is released.
	1400	29.2	28.3	1621	28.9	- -	- -	- -	- - -	Before concrete pour.
	1500	29.0	28.2	1600	28.5	- -	- -	- -	- - -	After concrete pour.
	1800	28.9	27.8	1600	28.5	- -	- -	- -	- - -	Steam on.
	2000	28.9	27.6	1600	28.5					
	2200	28.6	27.2	1550	28.4					
	2400	27.5	26.0	1425	27.5					
1-7-64	0400	27.2	25.6	1312	26.7					
	0640	27.2	25.9	1288	26.6					
	0700	27.1	25.9	1269	26.4	- -	- -	- -	- - -	Steam off and tarps removed.
	0705	25.9	25.3	1262	26.4					
	0710	25.3	24.8	1254	26.3					
	0720	24.8	24.3	1238	26.2					
	0725	24.3	24.0	1235	26.2					
	0730	24.0	23.6	1223	26.1					
	0745	23.7	23.3	1212	26.0					
	0750	23.6	23.1	1212	26.0	- -	- -	- -	- - -	Forms off.
	0800	0	0	1012	24.6	- -	- -	- -	- - -	Strands released.
	1145			1019	24.6					
1-8-64	1245			1104	25.2					
1-10-64	1115			1096	25.2					
1-13-64	1045			1092	25.2					
1-17-64	1315			1065	25.0					
1-22-64	1315			1069	25.0					
1-24-64	1015			1067	25.0					
2-4-64	0900			1050	24.9					
2-28-64	1000			996	24.5	- -	- -	- -	- - -	Girder moved to bridge site and positioned.

FIGURE 13

ClibPDF - www.fastio.com

GIRDER B TEMPERATURES (° F)

Date	Time	TC-1	TC-2	TC-3	TC-4	TC-5	TC-6	TC-7	TC-8	TC-9	TC-10	TC-11	TC-12	TC-13	TC-14	TC-15	TC-16	TC-17	TC-18	TC-19	TC-20
1-6-64	1530	36	42	45	46	46	46	46	46	42	41	40	39	39	42	44	44	44	44	55	54
	1600	53	53	53	53	53	53	53	53	51	49	49	49	49	49	49	49	49	49	57	55
	1700	55	55	55	55	55	55	55	55	50	49	48	48	48	50	50	50	50	48	58	55
	1800	58	57	57	57	57	57	57	57	63	63	63	74	50	60	62	62	74	60	88	53
	1900	61	63	63	63	63	67	71	71	83	84	84	85	56	80	97	97	108	0	105	53
	2000	78	84	81	80	84	87	95	83	86	80	80	67	34	72	96	96	103	-	117	50
	2100	58	75	72	71	74	73	90	80	70	-	71	70	35	80	105	102	111	-	125	51
	2200	67	98	95	93	96	90	110	100	73	-	93	94	36	90	111	106	116	-	130	51
	2300	79	120	119	118	118	106	125	121	69	-	75	74	38	93	115	115	118	-	130	51
	2400	90	131	132	133	132	118	125	123	70	-	77	85	50	107	123	128	135	-	132	52
1-7-64	0100	115	148	150	150	149	139	148	146	97	-	101	102	65	120	133	129	137	-	131	51
	0200	117	149	150	150+	150+	140	149	146	100	-	102	103	65	121	135	131	138	-	132	51
	0300	119	150	150+	150+	150+	141	150	147	99	-	103	103	65	121	137	136	140	-	135	51
	0400	120	150	150+	150+	150+	141	150	147	101	-	103	104	65	121	135	132	139	-	132	51
	0500	121	150+	150+	150+	150+	143	150	147	101	-	105	111	67	122	132	127	137	-	129	49
	0600	121	150	150+	150+	150+	142	150+	148	118	-	116	117	79	116	138	132	143	-	135	49
	0645	121	150	150+	150+	150+	142	150+	148	119	-	121	121	85	115	138	132	143	-	135	49
	0650	122	150+	150+	150+	150+	141	150+	148	118	-	119	119	83	115	138	133	143	-	134	46
	0655	122	150+	150+	150+	150+	142	150+	148	119	-	119	119	83	115	138	133	143	-	132	47
	0700	95	132	135	136	137	118	133	130	91	-	92	91	41	74	98	88	102	-	104	46
	0705	82	121	125	127	127	105	121	118	92	-	98	95	66	95	114	105	110	-	91	47
	0710	110	143	140	141	141	122	135	133	85	-	85	83	57	86	99	93	97	-	88	47
	0715	102	138	142	143	144	125	137	134	86	-	86	84	61	88	96	93	93	-	88	47
	0720	102	138	141	142	143	125	137	134	86	-	86	84	61	88	96	93	93	-	81	47
	0725	95	132	135	136	138	122	134	130	78	-	78	76	58	80	88	87	87	-	99	47
	0730	101	137	141	142	143	124	136	126	75	-	75	73	54	74	85	85	81	-	58	47
	0735	101	137	140	141	141	123	133	129	66	-	65	52	62	75	83	84	84	-	55	47
	0740	110	143	146	147	148	132	139	135	79	-	80	54	66	70	76	81	82	-	56	47
	0745	111	143	146	147	148	131	137	133	75	-	76	52	65	66	75	81	80	-	54	48
	0750	109	143	145	147	147	125	130	126	62	-	63	42	56	55	60	65	66	-	53	47
	0755	104	140	143	145	138	121	128	124	60	-	62	40	62	58	65	70	72	-	68	47
	0800	109	143	146	147	147	130	132	128	65	-	70	55	64	30	55	51	50	-	52	47
	0805	101	138	142	143	143	123	124	121	55	-	58	42	53	50	59	62	62	-	53	46
	0810	59	75	89	103	113	125	128	142	51	-	65	50	61	57	64	68	70	-	52	48
	0815	65	83	96	110	123	136	148	150+	64	-	68	55	65	75	81	85	87	-	51	48
	0820	67	87	105	123	140	-	-	-	81	-	84	75	82	78	83	85	87	-	51	49
	0825	68	89	108	126	143	-	-	-	80	-	83	98	81	76	82	83	86	-	50	48
	0830	70	91	111	130	142	-	-	-	100	-	105	106	104	100	103	106	107	-	53	50
	0835	64	80	95	-	-	-	-	-	-											
	1217	81	107	110	115	110	88	92	91	55											
	1300	80	104	106	121	106	86	90	89	55											
	1400	77	98	100	128	100	82	86	85	55											
	1500	75	92	94	111	95	78	83	81	58											
	1600	72	87	89	102	89	75	77	77	55											
	1700	70	83	84	98	85	71	74	73	50											
	1800	66	79	80	91	81	68	71	69	47											
	1900	64	76	76	87	77	65	68	65	47											
	2000	62	73	73	83	74	63	65	62	47											
	2100	60	70	70	77	70	60	62	59	44											
	2200	57	66	66	71	67	58	59	56	44											
	2300	55	64	60	65	62	53	55	51	41											
	2400	52	61	61	65	62	53	55	51	41											
1-8-64	0100	51	58	58	58	59	51	52	48	41											
	0200	48	56	56	56	57	48	50	46	40											
	0300	46	54	54	54	55	46	47	45	40											
	0400	45	51	51	51	52	45	46	42	36											
	0500	43	50	50	50	50	43	45	40	35											
	0600	42	47	47	47	47	41	43	39	32											
	0700	40	45	45	45	45	40	41	37	29											
	0800	39	43	43	43	43	38	40	36	31											
	0900	39	42	42	42	42	38	39	36	36											
	1000	40	41	41	41	41	39	40	37	39											
	1100	41	41	41	41	42	40	41	40	42											
	1200	43	42	42	43	42	42	43	42	47											
	1245	46	45	45	73	45	45	45	46	53											

Notes: - No recording.

See Figure 12 for TC locations.

ClibPDF - www.fastio.com

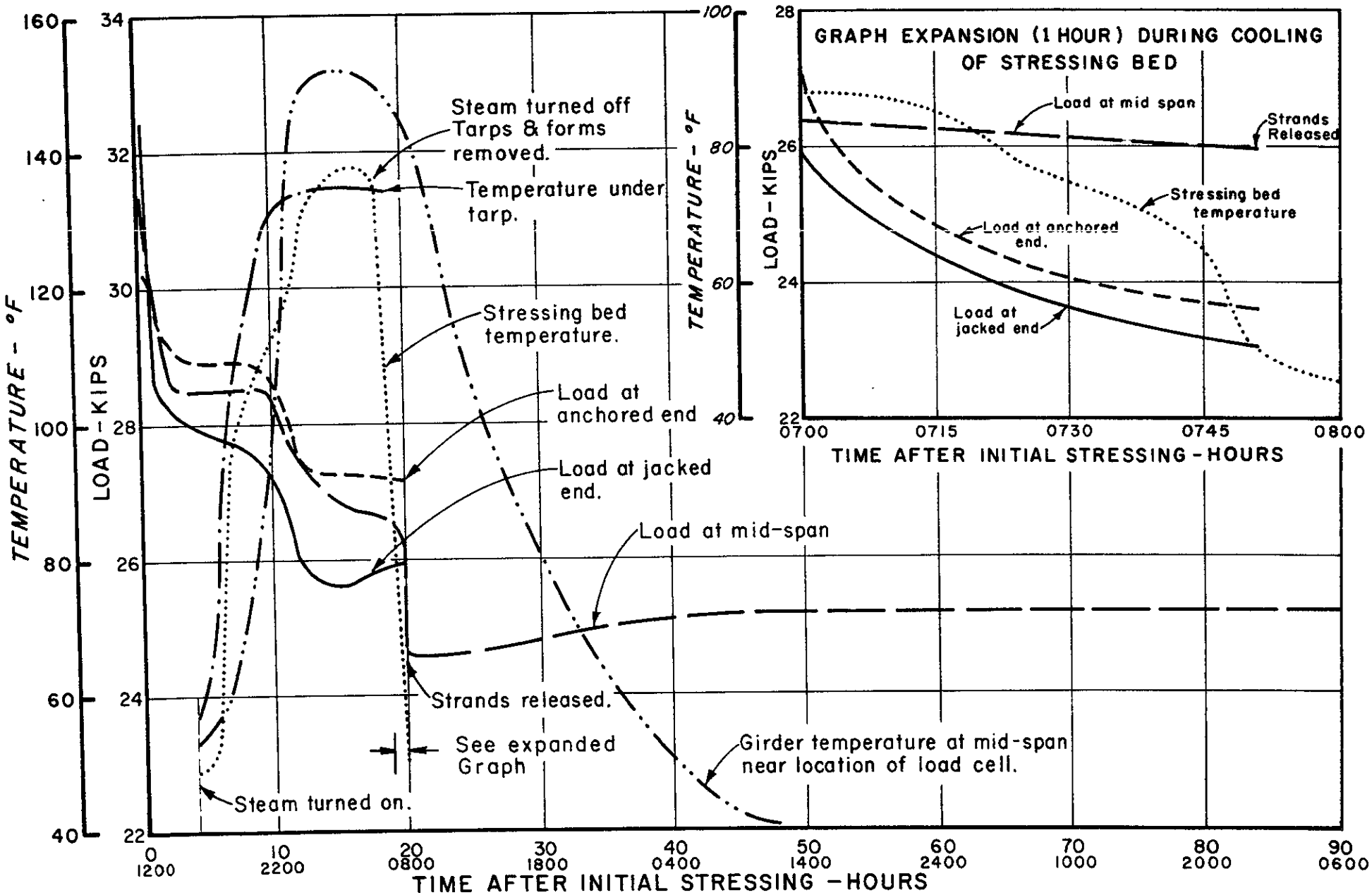

STRAND LOAD CHARACTERISTICS IN GIRDER B

FIGURE 15

ClibPDF - www.fastio.com

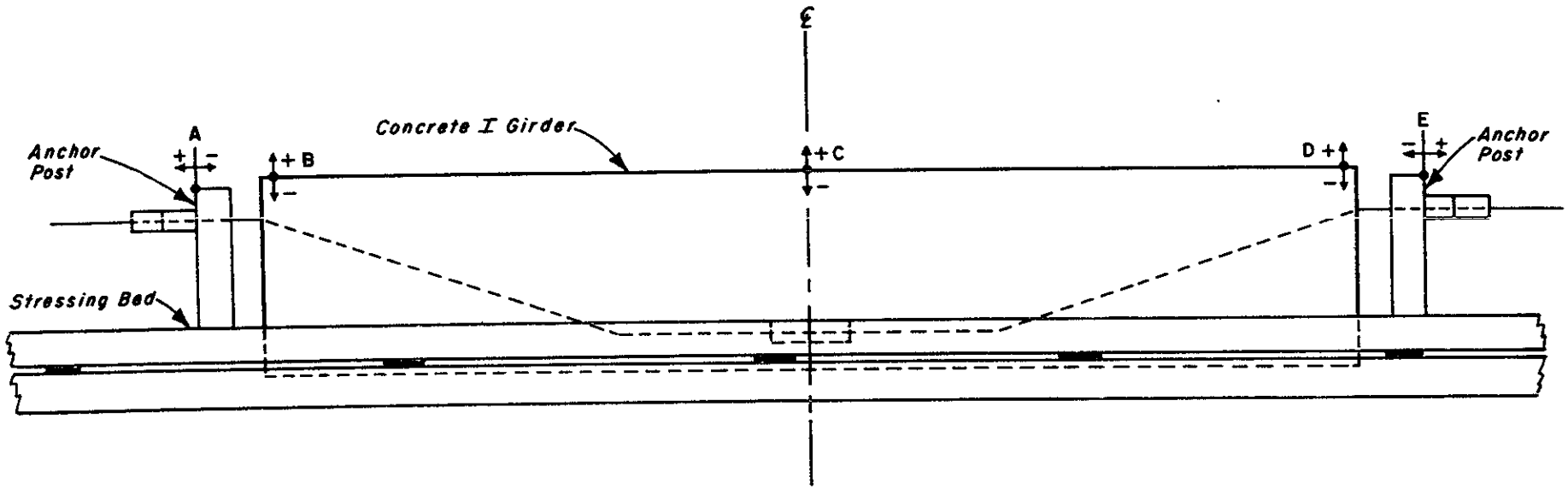

EXPLANATION

A, B, C, D, E: Location where measurements were taken.

+, −: Indicates direction of movement.

NO SCALE

GIRDER & STRESSING BED MOVEMENT TEST

GIRDER B & C

FIGURE 16

GlibPDF--www.fastio.com

FIGURE 17

GIRDER AND STRESS BED MOVEMENTS DURING CURING TIME

(All dimensions in inches)

GIRDER B

Date	Time	A	B	C	D	E	Remarks
1-6-64	1210	0.00	0.00	0.00	0.00	0.00	Begin stressing strands (Four strands stressed)
	1310	-0.15	-	-	-	-0.23	All strands stressed
	1400	-0.16	-	-	-	-	
	1500	-0.15	-0.04	-0.01	-0.01	-0.23	
	2400	-0.18	-	-	-	+0.18	
1-7-64	0800	-0.16	0.00	+0.02	+0.05	+0.21	Tarps removed
	0815	-0.11	-	-	-	+0.12	
	0830	-0.10	-	-	-	+0.03	Forms removed
	0850	+0.06	-0.22	+0.79	-0.22	+0.43	Strands released

GIRDER C

Date	Time	A	B	C	D	E	Remarks
1-7-64	1100	0.00	0.00	0.00	0.00	0.00	Before stressing strands
	1350	-0.15	+0.10	+0.10	+0.08	-0.43	All strands stressed
	1630	-0.18	-	-	-	-0.42	
1-8-64	1220	-0.10	-	-	-	-0.04	
1-9-64	0740	-0.16	+0.58	+0.36	+0.11	-0.44	
	0805	+0.10	+0.17	+1.00	-0.13	-0.08	Strands released

\- No reading

See Figure 16 for A, B, C, D, and E locations.

ClibPDF - www.fastio.com

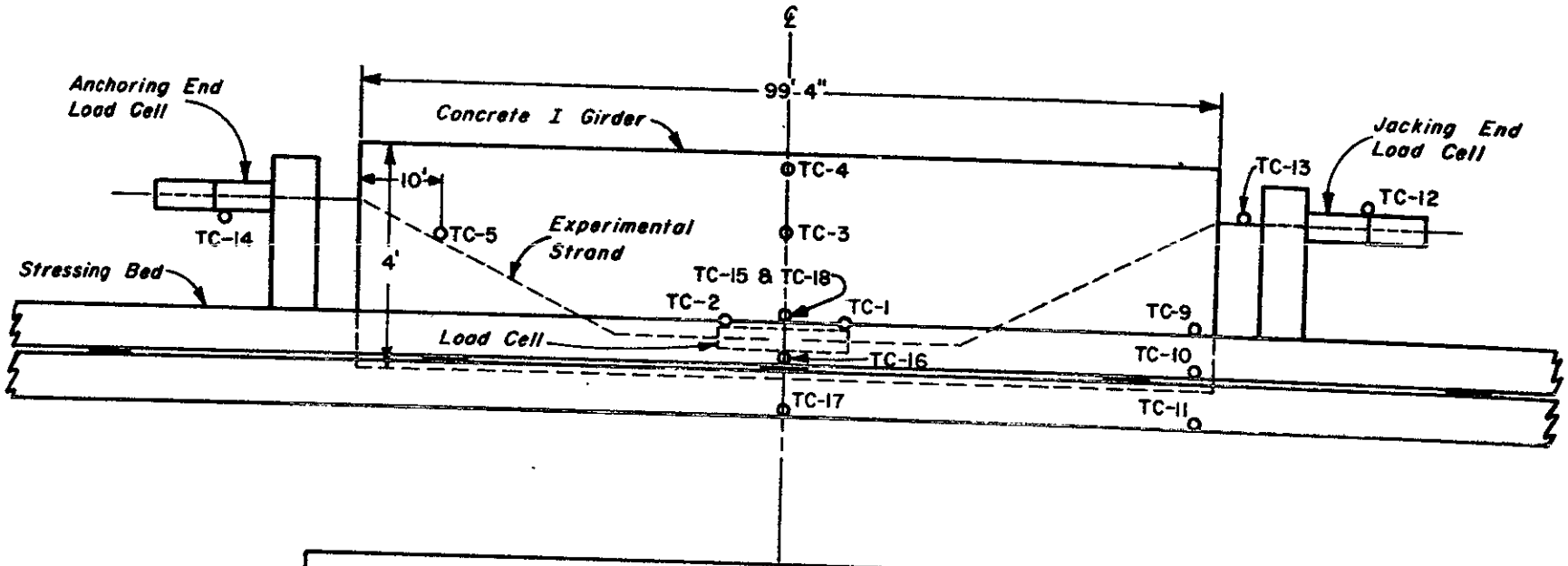

EXPLANATION

TC — Thermocouple

- o TC-1, 2, 12, & 14 - Temperature on Load Cells.
- o TC-5, 13 - Temperature on Experimental Strand.
- o TC-3 - Temperature in Girder Web at Mid-Span
- o TC-4 - Temperature 2" from Top Surface of Girder.
- o TC-9, 10, 11, 15, 16, 17, & 18 - Temperature on the Flanges of the Stressing Bed I Beams.

TC-19 - Temperature Under Tarp During Curing Cycle.

TC-20 - Outside Air Temperature

NO SCALE

GIRDER C

FIGURE 18

ClibPDF - www.fastio.com

GIRDER C LOAD AND STRAIN MEASUREMENTS

Date	Time	Anchored End (Kips)	Jacked End (Kips)	Load Cell Strain at Mid-Span Microinches	Load at Mid-Span (Kips)	Remarks
1-7-64	1220	0	0	0	0	
	1235	30.0	32.3	1608	31.9	Before jack was released
	1235	29.8	29.3	1531	30.4	After jack was released
	1345	28.3	28.5	1435	28.5	Before concrete pour
	1435	28.3	28.5	1431	28.4	
	1605	28.1	28.3	1410	28.0	After concrete pour
	1800	28.0	28.1	1404	27.8	Steam on
	2015	27.6		1412	28.1	
	2205	27.5	27.9	1394	28.0	
1-8-64	0010	26.7	27.2	1277	27.5	
	0420	25.8	26.1	1181	27.1	
	0720	25.7	25.8	1146	27.0	
	0820	26.1	26.5	1173	27.1	
	1030	26.5	27.0	1196	27.2	
	1220	26.6	27.1	1185	27.1	
	1355	26.7	27.1	1162	27.0	Temp. recorder shut off
	1530	24.0	24.1	1065	26.6	
1-9-64	0700	25.7	25.7	1231	27.3	Forms removed
	0750	25.8	25.9	1238	27.4	
	0750	0	0	1104	26.8	Harped strands released
	0800			1088	26.7	Harp hold-downs released
	0800			823	25.6	All strands released
	0810			833	25.7	
	1630			819	25.6	
1-10-64	1110			831	25.7	
1-13-64	1045			819	25.6	
1-17-64	1315			767	25.4	
1-22-64	1315			777	25.4	
1-24-64	1015			773	25.4	
2-4-64	0900			731	25.2	
2-28-64	1000			642	24.9	Girder moved to bridge site and positioned

ClibPDF - www.fastio.com

GIRDER C TEMPERATURES (° F)

Date	Time	TC-1	TC-2	TC-3	TC-4	TC-5	TC-9	TC-11	TC-12	TC-13	TC-14	TC-15	TC-16	TC-17	TC-18	TC-19	TC-20
1-7-64	1615	66	73	71	72	72	68	67	71	63	65	62	64	62	64	54	56
	1700	72	72	72	71	72	76	74	69	79	71	71	71	75	71	77	52
	1800	62	62	65	65	65	69	62	57	67	65	66	66	70	67	79	52
	1900	79	79	82	80	84	83	80	70	83	82	84	83	87	82	82	51
	2000	84	84	92	86	91	97	90	75	100	89	100	95	110	92	100	52
	2100	92	92	103	95	97	100	92	82	103	92	109	103	117	101	108	45
	2200	104	104	111	106	103	106	97	87	106	92	115	109	121	106	113	45
	2300	115	115	120	118	108	107	98	87	107	93	119	113	123	110	118	45
	2400	127	127	128	130	115	108	85	87	110	90	123	118	126	113	122	47
1-8-64	0100	134	134	133	136	119	110	100	95	111	81	126	121	128	117	124	49
	0200	137	137	135	137	121	109	101	92	109	73	124	120	127	116	122	45
	0300	139	139	137	138	121	111	103	102	111	85	126	122	128	118	124	45
	0400	140	140	138	139	120	108	105	107	111	86	127	122	127	119	124	50
	0500	139	140	137	138	118	104	99	97	108	87	126	121	128	118	122	47
	0600	140	140	137	137	118	104	95	97	105	89	124	120	127	116	122	55
	0700	139	140	136	136	117	100	93	91	104	88	123	119	124	116	107	43
	0800	139	139	136	135	115	110	105	100	113	83	130	132	134	119	133	40
	0900	138	138	137	135	114	115	110	106	120	85	131	132	133	123	133	56
	1000	138	138	137	137	114	108	103	75	118	91	134	135	136	126	135	65
	1100	139	139	139	138	116	110	106	80	123	96	137	136	138	128	137	73
	1200	141	141	139	140	116	111	102	74	121	118	135	136	137	128	136	72
	1300	141	141	141	140	119	113	108	79	124	95	139	137	140	127	141	78
	1400	142	142	141	141	121	107	105	81	118	98	130	127	126	127	121	70

Note: See Figure 18 for TC locations.

FIGURE 20

ClibPDF - www.fastio.com

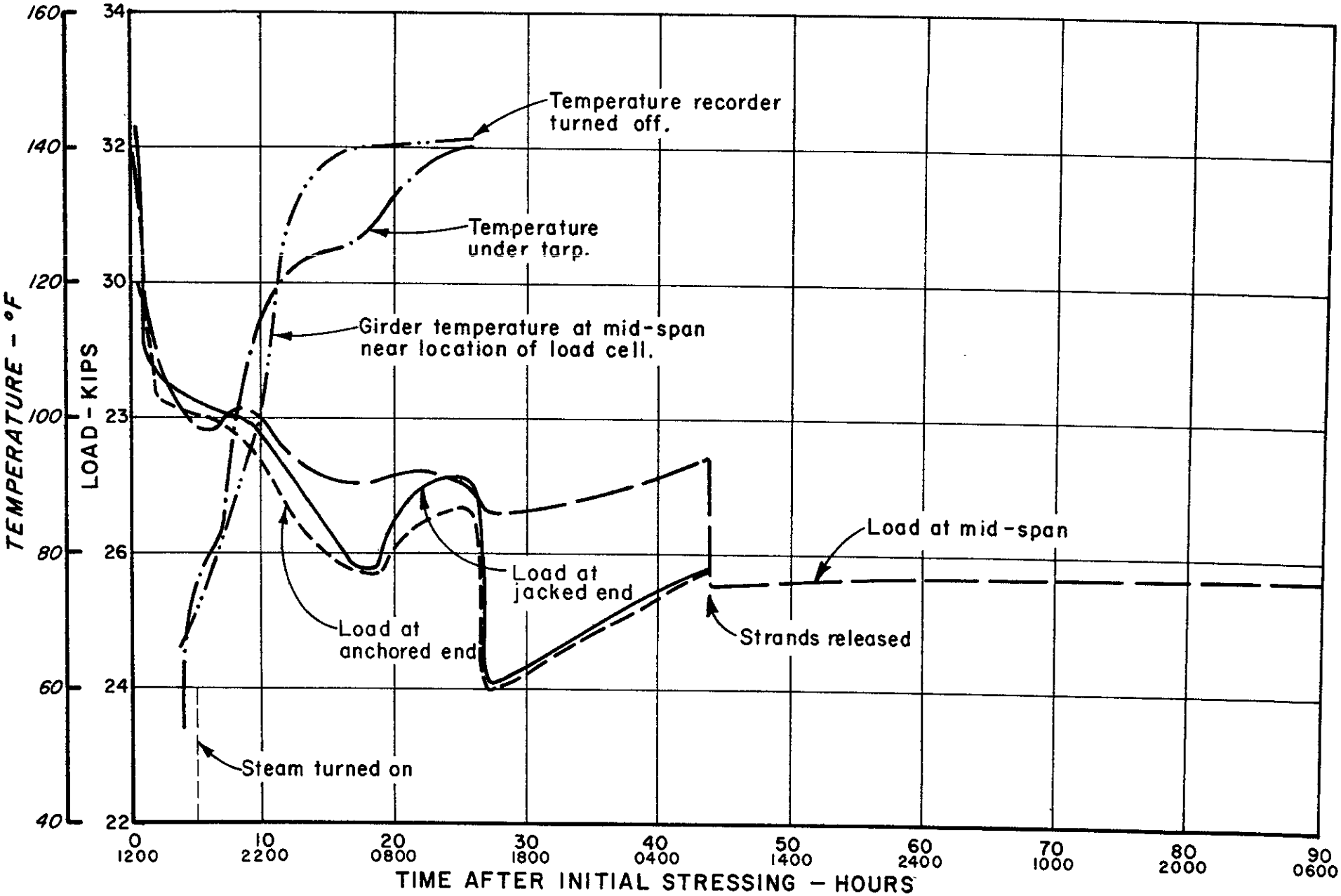

STRAND LOAD CHARACTERISTICS IN GIRDER C

FIGURE 21

ClibPDF - www.fastio.com

FIGURE 22

Test stress bed.

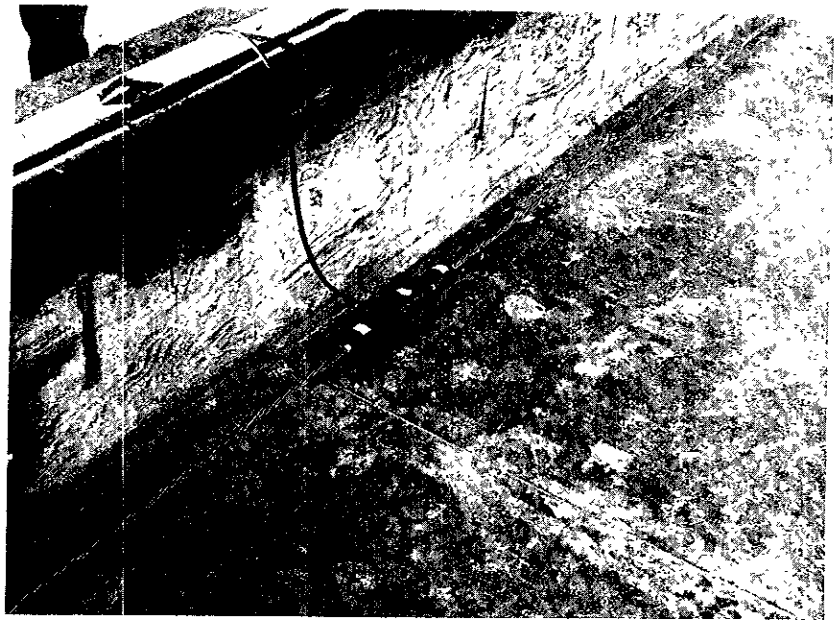

FIGURE 23

Load cell spliced into strand.

ClibPDF - www.fastio.com

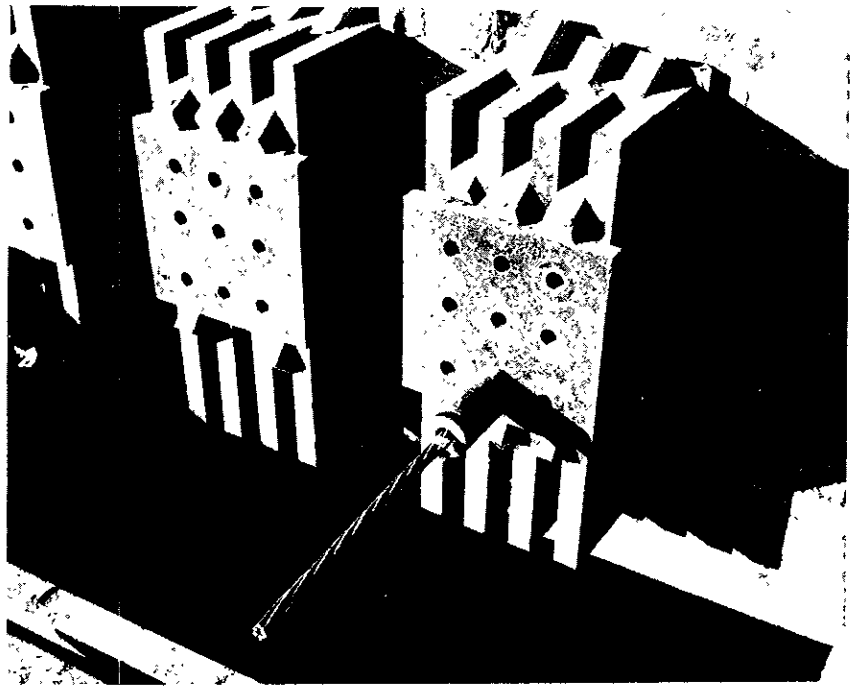

FIGURE 24

Anchoring chuck.

ClibPDF - www.fastio.com

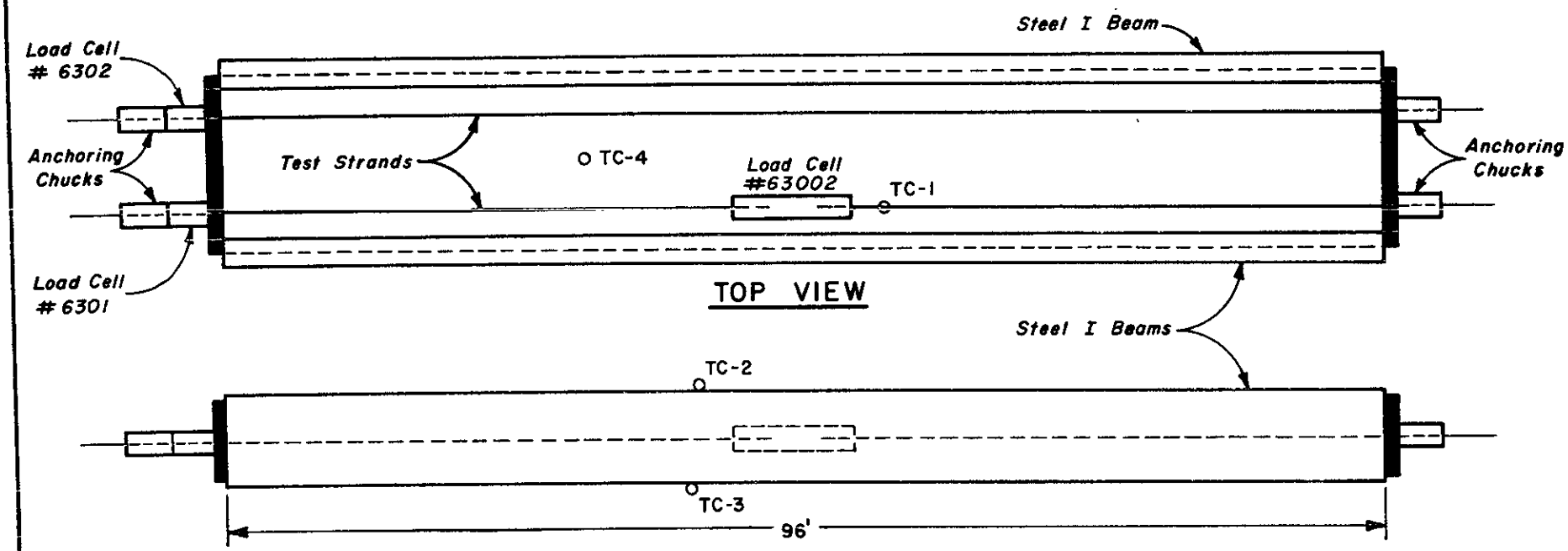

EXPLANATION

- o TC-1 Thermocouple on Test Strand.
- o TC-2 Thermocouple on Top Flange of I Beam
- o TC-3 Thermocouple on Bottom Flange of I Beam
- o TC-4 Thermocouple inside Stressing Bed Under Tarp

NO SCALE

TEST STRESSING BED

FIGURE 25

ClibPDF - www.fastio.com

PRESTRESSING STEEL CREEP TEST

Date	Time	Load Cell # 6301	Load Cell # 6302	Load Cell # 63002
1-2-64	1400	0	0	0
	1440	29.1	28.9	29.1
	1500	28.8	28.1	28.8
1-3-64	0900	28.0	27.8	28.0
	1300	28.0	27.8	28.0
	1600	28.1	27.8	28.1
1-4-64	0900	26.9	27.0	26.9
	1000	26.7	27.0	26.7
	1430	26.8	27.0	26.8
1-6-64	0800	26.9	27.2	26.9
	0810	0	0	0

Load Cell #6301: Load in kips on end of spliced strand.

Load Cell #6302: Load in kips on end of unspliced strand.

Load Cell #63002: Load in kips at mid-span on spliced strand.

ClibPDF - www.fastio.com

TEST STRESS BED TEMPERATURES

Date	Time	TC-1	TC-2	TC-3	TC-4
1-3-64	1000	51	51	52	66
	1100	76	99	105	136
	1200	95	113	115	150
	1300	104	117	118	150+
	1400	110	121	125	150+
	1500	112	125	127	150+
	1600	106	107	107	142
	1700	95	97	97	126
	1800	86	95	95	120
	1900	83	95	95	112
	2000	81	94	94	109
	2100	78	91	92	109
	2200	78	95	95	101
	2300	77	92	92	115
	2400	76	89	90	104
1-4-64	0100	73	80	80	92
	0200	70	80	81	96
	0300	71	82	82	95
	0400	70	82	81	95
	0500	72	86	86	100
	0600	76	93	93	108
1-4-64	0700	81	100	101	127
	0800	89	102	105	125
	0900	92	105	107	124
	1000	96	105	107	123
	1100	90	90	90	104
	1200	85	82	80	87
	1300	80	78	76	83
	1600	68	73	73	96
	1900	55	57	59	75
	2200	48	48	51	66
1-5-64	0100	42	44	48	69
	0400	42	43	46	65
	0700	43	45	45	62
	1000	49	51	49	60
	1300	64	61	62	62
	1600	60	62	57	74
	1900	48	51	49	69
	2200	44	47	45	66
1-6-64	0100	46	44	46	61
	0400	44	44	43	59
	0600	43	43	44	58

TC-1 Temperature of test strand in ^{o} F.

TC-2 Temperature of test bed in ^{o} F.

TC-3 Temperature of test bed in ^{o} F.

TC-4 Temperature under tarp in ^{o} F.

ClibPDF - www.fastio.com

FIGURE 28

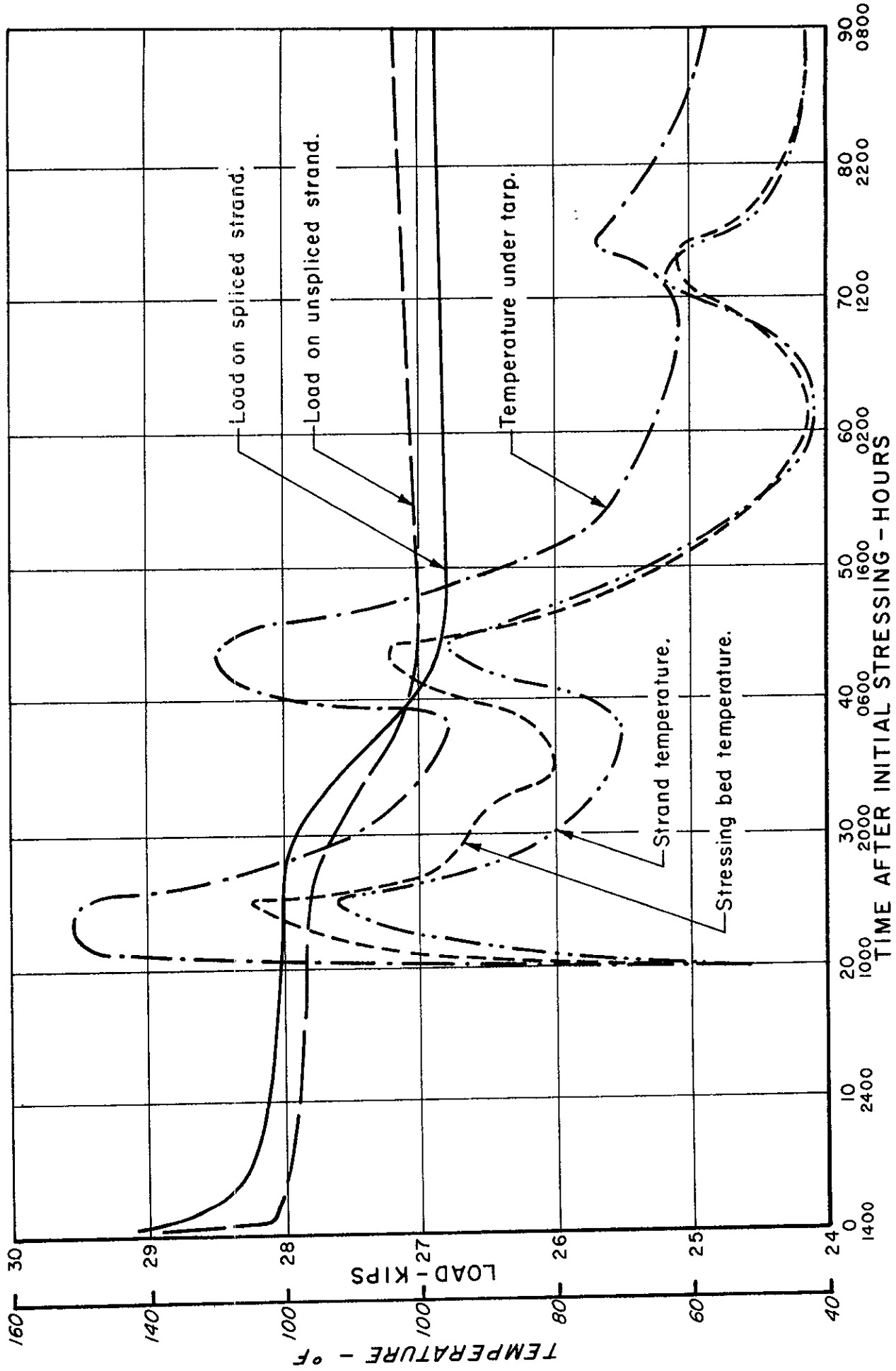

TEST STRESSING BED

ClibPDF - www.fastio.com