3744
C.1

LIBRARY COPY
Materials & Research Dept.

STATE OF CALIFORNIA
DEPARTMENT OF PUBLIC WORKS
DIVISION OF HIGHWAYS

DYNAMIC FULL SCALE TESTS OF MEDIAN BARRIERS

59-04

May 8, 1959

59-04

ClibPDF - www.fastio.com

Ho-Pa

ClibPDF - www.fastio.com

TABLE OF CONTENTS

	Page
INTRODUCTION	1
CONCLUSIONS	3
RECOMMENDATIONS	4
DISCUSSION	5
Flexible Barriers	5
Semi-Rigid Barriers	7
Rigid Barriers	10
Curbs	11
INSTRUMENTATION	13
REFERENCES	19
APPENDIX	20

ClibPDF - www.fastio.com

ClibPDF - www.fastio.com

STATE OF CALIFORNIA
DEPARTMENT OF PUBLIC WORKS
DIVISION OF HIGHWAYS
MATERIALS AND RESEARCH DEPARTMENT

May 8, 1959

Mr. G. T. McCoy
State Highway Engineer
Sacramento, California

Dear Sir:

Submitted for your consideration is a report of:

DYNAMIC FULL SCALE TESTS

OF

MEDIAN BARRIERS

Study made by . . . . . Structural Materials Section
Under direction of . . . . . J. L. Beaton
Work supervised by . . . . . R. N. Field
Instrumentation by . . . . . R. N. Field and Wm. Chow
Report prepared by . . . . . J. L. Beaton and R. N. Field

Very truly yours,

F. N. Hveem
Materials and Research Engineer

JLB/RNF:mw
cc: Headquarters Depts.
Districts

ClibPDF - www.fastio.com

ClibPDF - www.fastio.com

DYNAMIC FULL SCALE TESTS OF MEDIAN BARRIERS

I. INTRODUCTION

The advent of the four lane highway and particularly the divided expressway and freeway has reduced the frequency of the deadly head-on collisions that were so prevalent on the two lane and three lane type of highway. Unfortunately, this type of accident has not been eliminated entirely in that occasionally an out-of-control car will pass over even a wide median between the opposing roadways and may be involved in a head-on collision in the opposite roadway resulting in the death of the majority of the occupants of both cars.

As outlined in the Report on Median Accidents prepared by the Traffic Department (Reference 1) 20% of the fatal accidents that occur on freeways are the result of cross-median accidents.

It is the purpose of this report to outline the results of a test program to develop a median barrier that will prevent even a high speed automobile from getting into the opposite lane while at the same time reducing so far as possible the severity of accidents that result from an offending vehicle striking the barrier.

After attaining operating experience with several types of median barriers in many locations, the Division of Highways launched an extensive study in an attempt to develop the optimum design for such barriers and to establish the conditions that justify their use. The Materials and Research Department was assigned the problem of making full scale dynamic tests of various barrier systems so as to determine or develop the most efficient system for use as a barrier in a median strip.

In order of importance the following three functions were considered to be primary essentials of a median barrier: (1) positiveness of preventing crossing of median, (2) minimizing reflection of offending vehicle back into traffic stream, and (3) minimizing injury to occupants of offending vehicle.

This study was initiated by the Traffic, Design, and Bridge Department and approved by the State Highway Engineer on January 9, 1958. The work was financed under Work Order 58-13NN17.

In order that all pertinent factors would be considered, the Materials and Research Department requested that a median barrier committee be formed consisting of members of the Traffic,

ClibPDF - www.fastio.com

Design, Bridge, and Materials and Research Departments. This was done, and in April 1958 the Committee met and approved 12 designs of median barriers and 3 designs of bridge rails for testing. This original action was later revised by dropping one and adding four new designs making a total of 15 median barrier designs tested. The designs are shown on the individual test data sheets (Exhibits 2 through 21) in the Appendix of this report. The results of the bridge rail tests are not included in this report.

All the preliminary tests were conducted by driving a medium weight 4-passenger sedan automobile into the various test barriers at a speed of approximately 60 mph and an angle of collision of 30°. This same weight of car, speed and approach angle were used so as to obtain as good a comparison as possible between the various designs. Final tests were made on the two designs, which were judged to be the most efficient after the preliminary program, by driving a 34 passenger bus into collision with them at 40 mph and an angle of 30°. (The bus at 40 mph represented slightly more than twice the kinetic energy developed by the cars at 60 mph.) One collision with a passenger car (Exhibit 8) was made at a 20° angle of approach and was intended to determine the difference between a 20° and 30° angle of approach to the same type of barrier rather than as a comparative test of the barrier systems.

The 60 mph speed and the 30° angle of approach combination was selected as representative of the more severe type of oblique accident with a median barrier. (The primary aim was to test the resistance of the barrier.) This speed and angle was selected after studying the results of several actual cross median accidents as well as analyzing this department's past experience with many different speeds and angles of approach used during the testing of bridge curbs and rails reported previously (References 2 and 3).

Movements of the vehicle and barrier at the time of collision were recorded by a series of high and normal speed cameras placed approximately as shown on the typical test site layout diagram (Exhibit 1) in the Appendix. Dynamic data was reduced from the film. These data were supplemented by deceleration recordings taken from accelerometers located in an anthropometric dummy restrained by a seat belt and located in the driver's seat of the test car. In addition to this, various dynamic strains were recorded by the use of SR4 gages located on some of the barrier systems. All physical changes in dimensions and condition of the barrier systems were listed as well as the observations and appraisals of damage to the car and visual action during and after the collision as recorded by trained observers at the site.

ClibPDF - www.fastio.com

II. CONCLUSIONS

Of the 15 median barrier designs tested, only one satisfied all three criteria as an over-all efficient barrier when subject to high speed collision. The combination Cable-Chain Link Barrier (Exhibit 22), when used in a median strip wide enough to allow a deflection of about eight feet from centerline of barrier to edge of pavement, will (1) act as a positive barrier, (2) minimize the possibility of approach type of accidents by retaining the vehicle within the median strip, and (3) slow the offending vehicle gradually and so minimize the probability of injury to occupants of the offending car.

The Blocked-out Metal Beam Barrier shown on Exhibit 23 appears to be the most efficient design for median strips below the minimum space necessary for the above flexible barrier down to a width between edges of pavement as narrow as three feet. This barrier answers all three criteria to some degree. (1) It will act as a positive barrier, (2) while it may reflect the offending vehicle back into its traffic stream, the speed and angle usually will be such that following traffic will have some opportunity for evasive action, and (3) it should result in decelerations of the offending car during collision, which, while high, will be within the limits of human tolerance so there is some probability of surviving a collision with this barrier.

The concrete wall barrier shown on Exhibit 24 would function in any width of median; however, this barrier satisfies but two of the criteria. It (1) can be constructed to act as a positive barrier, (2) will reflect the offending vehicle back into its traffic stream, and the reflection angle will be such that following traffic will have some opportunity for evasive action; however, the speed of caroming off the barrier will be so rapid that closely following vehicles will have little time for evasive action, and (3) will produce decelerations due to the change in direction during collision much higher than either of the above two barriers and the chance of survival during violent collisions would be minimized.

It is estimated that the Cable-Chain Link Barrier will cost about five dollars per lineal foot. The Blocked-Out Back to Back Metal Beam Barrier and the Concrete Wall are estimated to cost about eleven dollars per lineal foot.

ClibPDF - www.fastio.com

ClibPDF - www.fastio.com

III. RECOMMENDATIONS

The three designs shown on Exhibits 22, 23, and 24 are recommended for use as median barriers, subject to the following:

1. The Cable-Chain Link Barrier shown on Exhibit 22 be used as a barrier in medians where the width available will allow for at least 8' deflection of the barrier. It could be used in a median of lesser width depending on the degree of risk involved in allowing a momentary encroachment into the opposing roadway.

2. The Blocked-Out Metal Beam Barrier shown on Exhibit 23 be used in narrow medians down to 3' when the space is insufficient for the Cable-Chain Link Barrier. By eliminating the metal beams and the wood block from one side of this design, it could be utilized where a definite barrier type of guard rail is needed such as at bridge ends, tight curves, or other hazardous areas.

3. The Concrete Wall Barrier shown on Exhibit 24 be considered for narrow medians, especially below 3' or where earth is not available as a foundation for the Blocked-out Metal Beam Barrier.

ClibPDF - www.fastio.com

ClibPDF - www.fastio.com

IV. DISCUSSION

The reason for placing a barrier in a median between the opposing roadways of a divided highway is to prevent the crossing of that median by any traffic. Unfortunately, as reported by our Traffic Department, studies of median barriers already in place show that they are involved in accidents that did not occur before they were placed. Thus it appears that a median barrier in order to be most effective must not only prevent crossing of the median but when struck by a car must minimize occupant injury and must minimize the tendency of the offending vehicle to be bounced back into the traffic stream.

Before discussing the findings of this study, the purpose of which was to develop a barrier that would be the most effective considering the above three criteria, the attention of the reader should be directed to the fact that because of the cost of such a test program, it was necessary to hold the number of tests to the very minimum needed to provide a proper guide to engineering judgment rather than to attempt to collect sufficient information to develop mathematical parameters of all details.

The discussion of the test program below is therefore tempered by the actual operating experience of the Division of Highways with several median barrier designs as well as a series of dynamic tests performed on barrier curbing and bridge rails performed during the years 1953, 1954, and 1955. Our studies indicated in general that there are probably three broad classifications into which the various designs of median barrier can be placed. These are the (1) flexible type, (2) semi-rigid type, and (3) rigid type.

FLEXIBLE BARRIERS

The criteria used in this study for a flexible type of barrier was a design that would fulfill the barrier concept while at the same time it would flex and deform under collision such that the deceleration of the offending car would be tolerable to its occupants and at the same time would provide safe maneuvering time and space for any cars in its own traffic stream. This being a new concept insofar as median barriers were concerned, no practical working designs could be found. During the study period prior to actual testing, several different designs were considered by the Median Barrier Committee but were discarded for various reasons, and the one design considered worthwhile for immediate testing was a combination of chain link fencing and wire rope cable properly anchored at the ends.

As illustrated by Exhibits 13, 15, 16, 17, 18, and 20, several tests were made to determine the proper details for such a system. The combination of 9 gage chain link fabric on 2 1/4" x 4.1# steel H posts seems to be reasonably well balanced in that

ClibPDF - www.fastio.com

during failure it provided sufficient resistance to decelerate both the test car and bus within a reasonable distance, while at the same time it allowed a deceleration rate tolerable to the occupants of the car.

It is of significance that transverse deceleration during test collision was in most cases less than longitudinal deceleration on this cable-chain link design. This illustrates the efficient trapping action of this design which brings the vehicle to a stop with a gradual transverse deceleration, not subjecting the occupants to the high transverse Gs usually resulting in ejections. The exception to this was Exhibit 17 which was a test of the proposed anchor and closure design. The results of this latter test proved that the anchorages immediately trap a car and cause a violent accident.

One of the secondary benefits of this design is that it will support a growth of ivy or other vines to serve as a headlight screen. It is probable that in some areas vines will not grow. It is suggested in these areas that wood or light metal strips could be inserted in the chain link fabric. In this case it is probable that the chain link fabric should be 48" wide rather than the 36" used in this series of tests. Indications are that this additional foot in height will not seriously affect the operation of the design as a barrier as long as the cable system remains undisturbed.

The lower cable has a double purpose of serving to distribute the collision load to the back posts, thereby stiffening the system in general, while at the same time allowing the wheel to pass over during initial impact and then serving as a trap to prevent the return of the front wheel and so helping to retain the car in the median area. The 9" height seems to be about right for this purpose.

The top cable is the most important structural item in this system. Its placement with respect to height is critical and its attachment to the post is critical. If the cable is placed too low, it will either permit the car to pass right on over the system or it will force the car to bounce back into its traffic stream. If placed too high, it might tend to slip on over the car permitting it to pass on through and perhaps sever the superstructure.

This series of tests indicates that 30" above the ground is about the proper height for this top cable. This height is well above the center of gravity of most cars and pickups on the road today and therefore tends to prohibit any tendency for the car to roll. At the same time insofar as the average passenger car is concerned the cable will cut through the body sheet metal and slip over the colliding wheel; this helps to retain the car in the median area throughout and after collision. Exhibit 24 also shows this height to be effective in stopping a bus. Test No. 12 (Exhibit 13) on a single top cable with load cells in the cable

ClibPDF - www.fastio.com

system indicate that a single cable will probably serve in this design. However, to be most effective a cable should be located on the collision side. This requires two cables. In addition, the risk involved in cutting one cable during collision is such that the factor of safety of having two cables is well worth the slight additional cost.

The fittings used to fasten the cable to the post must be so designed that they will clamp the cable firmly in place but under collision loading will slip off the end of the post acting as a series of friction brakes. There should be no tendency to fix the cable to the post. If the cable were fixed to the posts, this would result in tripping the car rather than gradually snubbing it through a tolerable deceleration.

The effect of end anchorages is a definite problem. An anchorage strong enough to develop the strength of the cable is so strong that when struck it trips the car rather than snubs it to a gentle stop. This tends to cartwheel the colliding car in an uncontrolled manner with the possible unfortunate result that the car could pass on over the barrier, although it did not during the test of the anchorage system in this study. Under operating conditions the anchors should be placed at a point where other fixed objects occupy the median area. Insofar as distance between anchors is concerned, it has been determined by test that each additional one hundred feet will contribute not more than two or three inches of additional side deflection. The only practical limit to length would be that determined by the effects of temperature.

The cable should be placed and maintained in a snug condition but should contain little or no stress. In order to maintain the cable in this condition, turnbuckles should be placed about every five hundred feet, so as to provide for average seasonal changes as well as reasonable lengths for construction and replacement.

SEMI-RIGID BARRIERS

The criteria used in this study for a semi-rigid type of barrier was a design that would be strong enough to fulfill the barrier concept while at the same time capable of deforming into a smooth curve without pocketing under collision such that a change of direction of the offending car would not be as abrupt as if the barrier were as completely rigid as a concrete wall, thus providing some opportunity to the occupants of the offending car to survive and at the same time allowing a reflection of the car that would be rapid enough to allow following cars an opportunity for evasive action.

During the study period prior to actual testing, many different designs were considered by the Median Barrier Committee. A selection of designs shown by Exhibits 2, 3, 4, 5, 6, 7, 8, 9, 10, and 12 were selected to best investigate this general classification. These designs were selected for two reasons. The first

ClibPDF - www.fastio.com

was that almost all were already in use either in California or in other states or toll road authorities throughout the United States. The other was that the selection represented a good opportunity to investigate both types and spacing of posts as well as types and heights of rails. The results that came from testing this series of designs indicated that a composite design as shown in Exhibit 23 should be most successful. The two tests (Exhibits 14 and 21) confirmed these findings.

The efficiency of the design used for Test No. 13 (Exhibit 14) in lessening the chances of injury producing impacts apparent in other tests on corrugated beam guard rail mounted 30 inches above the ground is illustrated by the deceleration patterns shown on Exhibit 29. Note that the moderately high transverse Gs on the dummy occur when the vehicle is still in contact with the rail. It is apparent that the human body can sustain these moderate transverse Gs, taking the full load against the shoulder and arm with less chance of critical injuries than the high longitudinal Gs which usually throw the occupant against the steering column and windshield.

Tests No. 1 and 2 (Exhibits 2 and 3) were typical highway guard rail installations. In neither of these tests did the car pass over the barrier; however, the collision with the spring mounted curved beam (Tuthill) type resulted in the test car rolling along the top of the rail. Indications were that the car could have bounced across as well as coming to rest on the rail. The curved beam (Exhibit 3) tended to pocket the car during impact whereas the corrugated beam (Exhibit 2) formed a smooth curve and reflected the test car away from the rail. The necessity for good beam strength in metal beam guard rails was well illustrated by these two tests which coincide with the findings of others (Reference 4).

In both of these tests the car rolled over after impact. This was caused by the rail, which was mounted at a 25" height (19" center of rail), being forced back and downward under impact which tended to impart a rolling motion to the car. This same action occurred at all mounting heights of rail, whenever no provision was made to prevent the rail from following the posts downward. At 30" height the car tends to get under the rail forcing it upwards. This minimizes the tendency of the car to roll.

Test No. 3 (Exhibit 4) was used to study the effect of steel spring posts. It was determined that the flexible posts deflected excessively under impact so that they formed the rail into a pocketed ramp, and the car passed on over the barrier. This system has no value as a barrier.

Tests No. 4 and 5 (Exhibits 5 and 6) were similar designs used to investigate the effect of doubling the number of posts at a 25" mounting height of rail. This height of barrier gave identical results as the guard rail Test No. 1 (Exhibit 2) insofar as the

ClibPDF - www.fastio.com

reflected rollover type of accident was concerned in spite of the additional stiffness of adding the back rail in Test No. 4 and then doubling the posts in Test No. 5. The only effect of stiffening the system by doubling the number of posts was that in the stiffer system the car was more positively reflected back into the same traffic side of the rail.

Tests No. 6 and 7 (Exhibits 7 and 8) duplicate barrier designs located in both the Los Angeles and San Francisco areas on existing freeways. These systems utilized the 30" mounting height above a 6" curb. One design is the corrugated section beam and the other the curved beam type rail. Because these rails have approximately equivalent section modulus and were rigidly mounted on steel posts at 6' 3" centers, it was decided in advance that rather than using the exact speed and angle of approach for both designs, the angle of approach would be varied so as to note the difference between the two angles of approach. Both of these tests indicated that the railing was mounted at a proper height to provide positive barrier action and to prevent the rollover type of reflection. Unfortunately, this mounting height with no means provided to prevent the offending car from going under the rail results in the car colliding with the posts.

In Test No. 6 (Exhibit 7) the 30° angle of approach, the car collided so hard with the post that it was trapped within 23 feet, resulting in decelerations far in excess of those that could possibly be tolerated by the occupants of the car, and in addition would give a following car little opportunity for evasive action. At the flatter angle of 20° in Test No. 7 the car again went under the rail, but due to the flat angle the frame of the car did not contact the post. The post severed the front wheel which went on through the barrier into the opposing traffic lane while the car reflected at a flat angle on its own side of the barrier. The free wheel itself could have caused a head-on collision.

These tests indicated that while the 30" mounting height was undoubtedly a workable height, if the normal 12" wide rail is used there should be a means provided to prevent the undercarriage from being entrapped on the posts.

Test No. 8 (Exhibit 9) made use of a double corrugated metal rail mounted at an over-all height of 34" on each side of the steel post system so as to solve the entrapment problem. It did, but at the same time imparted a corkscrew rolling action to the car which resulted in the car tumbling on down the roadway similar to the 25" mounting height. This test seemed to verify that when no provision is made to prevent the rail from being downed with the posts, no matter what the height, it will impart a tendency to roll to the vehicle. In other words, to prevent roll the car must go under the rail so that the reaction of the rail on the car is downward.

There has been some belief that a spring system for mounting a guard rail would tend to minimize damage to the offending

ClibPDF - www.fastio.com

car. It may be true under light collisions; however, under heavy collisions as presented by Test No. 9 (Exhibit 10), a flexible mounting tends to allow the rail to pocket between the posts. This results in a rail failure and the car passing on through the railing, thus it has little value as a positive barrier.

The design shown on Exhibit 12 and Exhibit 6 are identical except for height, so they can be considered as comparison of the effect of the change of height. There were two significant observations from these comparative tests. The first was that while there was some question from the action of the car whether or not it would pass on over the rail in Test No. 5 (Exhibit 6), there was no question in Test No. 11 (Exhibit 12). However, it was definitely shown that a 30" height of a single rail mounted directly to posts would result in a severe collision with the posts during high speed high angle collisions.

These observations coupled with the operational success of blocked out guard rails used on the New Jersey Turnpike led to the design shown on Exhibit 23. Here the rail is blocked out on timber posts and has a lower rail to prevent undercarriage entrapment. The 30" high blocked out design minimizes the rollover tendency of the car by allowing it to force under the metal guard rail, thus maintaining rail elevation, while the lower rail prevents the car from being trapped by the posts. Exhibits 14 and 21 showed this design to be a success.

The decision to use timber posts was based on the observation that the timber post in earth under dynamic loading was more resilient and tended to give a smoother deceleration than did the steel post set in concrete. This was verified by static cantilever tests showing the 8 x 8 DF post to be nearly equivalent in strength to the 6" wide flange 15.5# steel post with approximately twice the deflection. This resilience would be lost if the timber were set in concrete so it is suggested that in going over structures or in other areas where earth is not available, then either steel posts or a concrete wall barrier could be used.

The over-all width of this barrier design is about 27", and its deflection under heavy dynamic collision is about 3 feet. This design is efficient in narrow medians as a positive barrier. The reflection angle and speed of the offending car is such that evasive action is possible by following cars. The collision decelerations and the after travel of the offending car is such that the occupants have an opportunity of survival as long as there are no stalled vehicles in the road ahead.

RIGID BARRIERS

Rigid barriers are represented in this series by only one test, Exhibit 19, but this test was supplemented by information gained during dynamic tests of five bridge rails performed and reported in 1955 and two concrete bridge rails tested during this

ClibPDF - www.fastio.com

series, which will be reported later. As shown by the test data sheet, this design failed during tests.

Indications from the results of Test No. 22 (Exhibit 19) are that the design of this rail needs only a slight amount of stiffening to make it serve under heavy collisions. Previous tests on bridge rails indicate that a wall as low as 27" in height could be effective as long as it did not fail. The reflective action from a properly designed concrete wall as indicated by previous tests conducted on bridge rails shows that the offending vehicle will reflect from the concrete wall with an abrupt change in direction and with high decelerations caused by the extremely rapid reflection of the vehicle from the non-deflecting surface. There is good opportunity, however, for evasive action by following cars in that the reflection angle is normally flat and due to the damaged colliding wheel the car tends to curve back into the rail and come to rest against it. There is even less opportunity of evading stalled traffic ahead after collision than there is with the semi-rigid type of barrier.

This rigid barrier is probably the only type that can be considered for those center strips where little or no space for a median barrier is available. In areas where it is felt that a great many brushing type of collisions will occur with such a center barrier, then consideration should be given to facing the rail with an undercut base or rubbing curb as shown in the alternate design B on Exhibit 24. This undercut type of rubbing curb was found to be exceedingly efficient in controlling an offending car when subjected to low angles of collision (Reference 3).

The failure of the light concrete wall used in Test No. 22 served to illustrate again the fact that when a rail "lays over" during a heavy collision, no matter what the height, a high speed colliding vehicle will tend to roll after reflecting from the barrier. Thus it is evident that any barrier design in which it is expected that measurable downward deflection will take place, then provision must be made to hold the restraining unit (rail, cable, etc.) at or above the center of gravity of the vehicle at the first instant of and throughout collision.

One other concrete median barrier was tested during this study. This barrier is shown on Exhibit 11 and consists of a series of truncated cone concrete posts placed at 5 foot centers. This design was not effective as a positive barrier and so can be considered only as a deterring type barrier.

CURBS

This series of tests included only two cases involving curbs placed in front of the test barriers. However, these two tests supplemented by some 200 previous full scale tests (Reference 3) performed on highway bridge curbing, are considered to be sufficient to support firm conclusions as to the effect of curbing in front of a median barrier. At high speeds the 6" high type of

ClibPDF - www.fastio.com

curb seems to have little or no effect on either the rise or deflection of the collision car. This is explained by the fact that the wheels and springs of the car were deflected over the 6" high curb with little appreciable change in elevation of the car itself. In other words, the center of gravity of the car and the frame of the car maintained their traveling elevation while the raise of the curb was taken up in the deflection of the tire and the springing system of the car. This effect would only be true for narrow medians and high angles of collision. At flatter angles of collision or wider medians, the rebound of the springing system would have time to lift a car to its new traveling elevation which would be 6" above its roadway elevation and due to spring reaction for a short period probably somewhat higher than this. Previous tests (Reference 3) indicate that this effect would no longer hold true for curbs 8" and higher. These higher curbs cause an immediate dynamic jump by the car. If such roadway curbs exist, then provision must be made in the design of the barrier to contain the dynamic jump.

ClibPDF - www.fastio.com

V. INSTRUMENTATION

A. Collision Vehicles

The vehicles used for this 1959 Test Series were standard 4-door sedans, 1951 to 1955 models, supplemented by one 34 passenger 17,000 lb. bus. The center of gravity of the various passenger cars was determined to be about the same and was between 21" and 23" above the pavement. The average weight of the vehicles with dummy and instrumentation was 4,000 lbs. The rear seat and spare tire were removed to facilitate installation of the control instruments. The following modifications and installations were made in the test vehicles:

1. A Bendix Hydrovac booster was attached to the master brake cylinder for radio remote operation of the brakes.

2. The ignition system was bypassed and wired into the remote-radio control panel.

3. The gas tank was drained and the gas line rerouted into a 1 gallon tank mounted over the spare tire well. This tank was equipped with a relief valve and cut-off valve to prevent leakage of fuel when the vehicle rolled.

4. A mounting plate was welded to the floorboard in the front seat compartment for installation of the steering motor (see Exhibit 30).

5. Storage batteries and the steering pulser were bolted to the rear seat floorboard.

6. The remote radio control equipment was bolted to trunk compartment deck (see Exhibit 30). Whip antennae were mounted on the rear body of vehicle.

7. A seat belt was installed on the driver's side.

8. An adjustable pulley was clamped to steering wheel for control of vehicle through the steering motor.

Approximately 2 man days labor was required to modify each stock passenger vehicle to radio control.

Radio control of the vehicle along the 2,000 foot collision path was accomplished by means of 3 modulated tones and the R.F. carrier from a transmitter installed in the control truck.

ClibPDF - www.fastio.com

The five basic functions considered necessary for complete and flexible control of the test vehicles were: ignition on, ignition off, steer right, steer left, and brakes on. The accelerator linkage was wired in the full throttle position before push off. The vehicles attained a peak speed of 58 to 62 mph on impact, with a 2,000 foot collision path.

The ignition system was energized through a relay controlled by the R.F. carrier from the control truck transmitter. A failure in any of the radio control equipment opened the ignition relay allowing the car to stop under compression.

A signal to the steering motor pulser actuated the steering motor in incremental steps, variable in each direction from 1/8" to 1" per pulse. The pulse rate was variable from 2 to 20 pulses per second. The steering pulser was set after determining the amount of correction necessary to the steering on each vehicle on a trial run.

B. <u>Accelerometers</u>

1. Two unbonded strain gage type accelerometers were mounted on the right side of the vehicle frame at Station 10, (10 feet to the rear of the front bumper for comparison to studies by others (Reference 5). The accelerometers are positioned with the axis sensitive to the longitudinal and transverse deceleration of the vehicle frame. Peak G readings are difficult to reduce from these oscillograph records because of high amplitude traces caused by the transient ringing inherent in the vehicle frame on impact with a semi-rigid object. Peak vehicle deceleration as reported on the data sheets represents an average of the peak decelerations recorded. This report does not contain the complete deceleration data nor its analysis. This will be reported later.

2. The anthropometric dummy positioned in the driver's seat was restrained by a conventional lap belt. The dummy was also instrumented with two accelerometers mounted in the chest cavity in the relative position of the heart, with the axis sensitive to the longitudinal and transverse deceleration of the upper torso. Deceleration readings from the dummy indicate the severity of injury producing collisions as well as the general body areas injured on impact the the door or steering column of the crash vehicle, and can in most tests be considered the maximum Gs deceleration sustained during impact. This information may also be used for correlation to the work of others (References 5 and 6).

   Because of unforeseen failures due to the high "G" loading sustained by the acceleromater recording equipment mounted in the collision vehicles during the first ten tests, consistent deceleration readings could not

ClibPDF - www.fastio.com

be produced. Therefore "G" readings from the first ten test collisions were not considered valid and are omitted from this report. On subsequent tests a 300 ft. tether line was connected from the accelerometers in the collision vehicle to the recording equipment in an instrument truck. The instrument truck followed parallel to and 30 to 50 feet behind the collision vehicle on the approach path. During two tests the tether line was severed a few milliseconds after impact; however, complete data were obtained on most of the Tests 11 through 22. In addition to the accelerometer data, the kinematics of the dummy under collision conditions were observed from the high speed tower camera on the first seven tests.

The top of the vehicle from the windshield to 6 inches behind the driver's seat was cut away to allow total photographic coverage of the dummy reaction. It was apparent after an analysis of the data film records of these first seven tests that the kinematic pattern of the dummy was very similar during all of the semi-rigid barrier collisions.

Additional data of this type was not considered to be of enough significance to justify removal of the vehicle top on subsequent tests.

In all tests on semi-rigid and rigid barriers where the vehicle was not trapped by the posts, the vehicle was subjected to high transverse decelerations. The dummy was forced against the left door with sufficient energy to break the latching mechanism. On tests where those high transverse decelerations were imparted to the dummy while the side of the vehicle was not in contact with the barrier, the head and shoulders of the dummy protruded from the car. Had the dummy not been restrained with a lap belt, it would have been ejected from the vehicle. However, in cases where the dummy contacted the door at a time when the side of the car was in firm contact with the barrier, exemplified by Test No. 8, the rail prevented the door from opening completely.

An examination of the sequence photographs from the 25" high barrier tests as exemplified by Test No. 2 (Exhibit 3) revealed that the rail retained only the lower portion of the door and allowed the top of the door to be forced open as much as one foot. In these cases the head of the dummy protruded from the vehicle, which resulted in critical head injuries.

When the dummy experienced excessive longitudinal decelerations, such as in Test No. 6 (Exhibit 7) the

ClibPDF - www.fastio.com

torso of the dummy pivoted about the femur, striking the head and chest violently against the steering wheel, windshield, and instrument panel. This action was typical on all tests where the front wheel assembly was trapped by the posts.

Deceleration data from all tests of Cable-Chain Link Barriers show very low transverse decelerations (2-9 Gs) and low longitudinal deceleration (3-7 Gs). If the dummy did impart a loading great enough to spring the door latching mechanism, the door did not open because the vehicle was firmly against the upper cables when peak transverse decelerations occurred.

C. Photographic

This department has determined from experience on previous collision tests that photographic coverage of this type of event will yield the maximum of significant data for the lowest initial investment. As it was necessary that the final analysis and presentation be in the form of a film report in addition to a written report, the data cameras had to also function as documentary cameras. A frame rate of 1200 per second was used for the tower mounted camera to record information on impact velocity, approach angle and average vehicle deceleration. The field of view from this camera was 30 ft. x 40 ft. covering from 20 ft. before impact to 20 ft. beyond impact parallel to the rail. To provide documentary coverage, a 200 frame per second camera with the same field of view was mounted adjacent to the data camera. The field of view from this camera covered from 10 ft. behind to 30 ft. beyond impact parallel to the rail.

Due to the variable post collision trajectory of the test vehicles, it was found necessary to orient all but the tower mounted data cameras at different locations for each test. The relative location of the cameras, barrier, collision vehicles, control and instrument vehicles for a typical test are shown on Exhibit 1. This was varied to meet the expected reflection action of each test. Standard photographic coverage of each collision included: one turret-mounted front data camera, one rear data camera, 2 overhead data cameras, and 2 documentary cameras panning the vehicle through collision to the terminal point. In addition to the above photographic coverage, a 70 mm sequence camera operating at 20 frames per second was used to record a documentary series that could be enlarged and analyzed for details. The pictures exhibited at the top of each test data sheet are reproductions of the most significant frames from this sequence camera coverage.

ClibPDF - www.fastio.com

Listed below is a description of the data and documentary cameras:

Camera No.	Frames /Sec.	Lens	Film	Location	Function
1	1200	12.5mm	16mm, 100' roll	Tower	Data
2	200	13mm	16mm, 100' roll	Tower	Data
3	200	4 in.	16mm, 100' roll	Front turret	Data
4	200	4 in.	16mm, 100' roll	Rear	Data
5	20	6.5 in.	70mm, 100' roll	Rear Platform	Doc. Sequence
6	24	Zoomar	16mm, 100' roll	Various	Doc. Pan
7	24	1 in.	16mm, 100' roll	Various	Doc. Pan
8	64	1 in.	16mm, 50' mag.	Various	Doc.

As each type camera motor required a different time interval to reach operating speed and each camera had a different operating frame speed, it was necessary to control them manually and in sequence from the camera control center.

A typical sequence for camera and flashbulb operation follows:

Impact minus 3 seconds, camera #8
Impact minus 2 seconds, cameras #2, 3, 4
Impact minus 1 second, camera #1
Impact minus 200 milliseconds, flashbulb #4

For certain barrier tests additional data cameras were positioned at strategic points to cover wheel or front suspension reaction, post and rail reaction.

For a closer view of the dummy reaction during the two bus tests, a 200 fps data camera was rigidly mounted above the rear window of the collision vehicle to record a full kinematic study of dummy reaction. This camera was connected to a ten second time delay relay starting the camera when the collision vehicle was within 10 seconds of impact. A spring loaded micro-switch mounted on the rear bumper actuated the time delay relay when the power assist truck released the collision vehicle on the collision path.

As data camera #1 was the only camera with 1000 cycle timing pips, it was necessary to provide a method of timing the other data cameras. A segmented drum revolving at approximately 1600 revolutions per minute was mounted directly below

ClibPDF - www.fastio.com

the tower in view of all data cameras. Analysis of the revolving drum image and the timing pips on the film from camera #1 provided a time-in-space correlation for all data cameras. It was thus possible to correlate the information from any film frame on the data cameras with the film from the #1 camera.

Two pressure sensitive electrical switches were mounted on the pavement on the collision path and positioned 5 ft. and 15 ft. before the collision point. As the vehicle passed over the switches, flashbulbs positioned behind the barrier in view of the high speed overhead data camera were fired. By analysis of the flashbulb images and the 1000 cycle timing pips on the high speed data film from camera #1, the average speed of the test vehicle 10 ft. before impact was determined.

A third flashbulb mounted on the collision vehicle was fired on impact by a "G" switch set to close when the deceleration approached 2 "G". A photocell mounted adjacent to the flashbulb transmitted this event marker pulse to the instrument truck accelerometer recorder through the tether line and onto the oscillograph recorder film. This pulse provided a correlation pip between the high speed data camera and the deceleration recordings.

When strain gages were mounted on the barrier rails to measure the transmission of stress through the rail members, it was possible to correlate the stress recording oscillograph to the data cameras through a similar flashbulb/photocell unit positioned behind the barrier and in view of data camera #1. This flashbulb was triggered manually from the camera control center a few milliseconds prior to impact. This report does not contain the complete stress and strain information. This data and its analysis will be contained in a later report.

ClibPDF - www.fastio.com

REFERENCES

1. Median Accident Study (1958)
   Traffic Department
   California Division of Highways

2. Full Scale Tests of Concrete Bridge Rails Subjected to Automobile Impacts.
   J. L. Beaton
   Vol. 35, Highway Research Board Proceedings.

3. Final Report of Full Scale Dynamic Tests of Bridge Curbs and Rails.
   Materials and Research Department
   California Division of Highways

4. Full Scale Appraisals of Guardrail Installations by Car Impact Tests.
   L. C. Lundstrom and P. C. Skeels
   38th Annual Meeting, Highway Research Board.

5. Automobile Head-on Collisions, Series II.
   D. M. Severy, J. H. Mathewson, and A. W. Siegel.
   University of California Institute of Transportation and Traffic Engineering.
   Presented at SAE meeting in Detroit, Michigan, March 4-6, 1958.

6. Seat Belt Hearings in the U. S. House of Representatives, May 1957.
   Automotive Crash Injury Research,
   Cornell Univ. Medical College.

ClibPDF - www.fastio.com

ClibPDF - www.fastio.com

APPENDIX

Exhibit 1	Plan View of Test Site
Exhibits 2 - 21	Individual Test Data Information Sheets
Exhibit 22	Cable-Chain Link Barrier
Exhibit 23	Blocked-out Metal Beam Barrier
Exhibit 24	Concrete Wall Barrier
Exhibit 25	Block Diagram - Crash Car Remote Controls
Exhibit 26	Block Diagram - Control Car Radio Control
Exhibit 27	Deceleration Instrumentation
Exhibit 28	Deceleration Record of Cable-Chain Link (Test 21) Barrier
Exhibit 29	Deceleration Record of Blocked-out Metal Beam (Test 13) Barrier
Exhibit 30	Deceleration Record of Concrete Wall (Test 22) Barrier
Exhibit 31	Photographs of Crash Car Instruments
Exhibit 32	Photographs of Control Car Instruments

ClibPDF - www.fastio.com

ClibPDF - www.fastio.com

ClibPDF - www.fastio.com

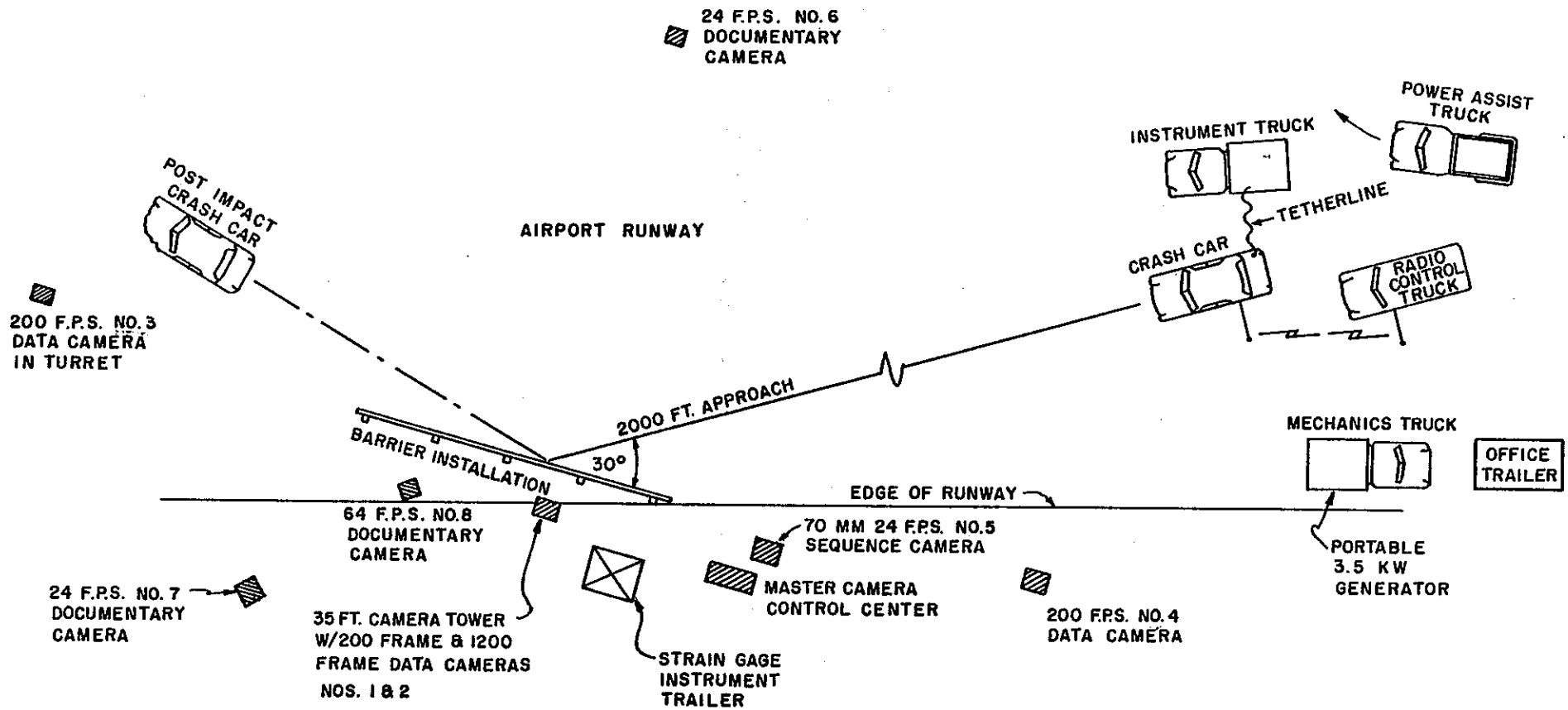

PLAN VIEW OF TEST SITE

STATE OF CALIFORNIA DIVISION OF HIGHWAYS MATERIALS & RESEARCH DEPT.

EXHIBIT 1

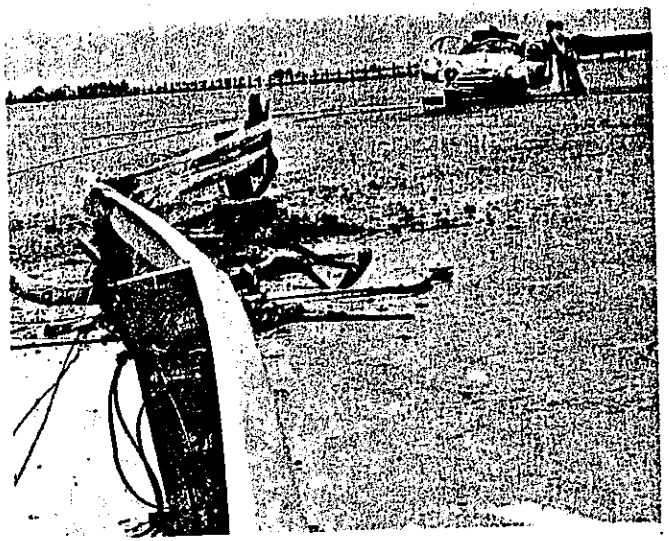

POST IMPACT

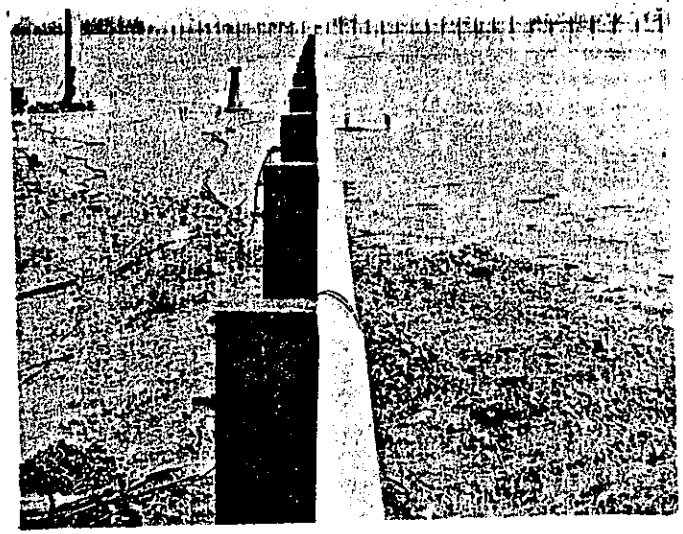

PRE IMPACT

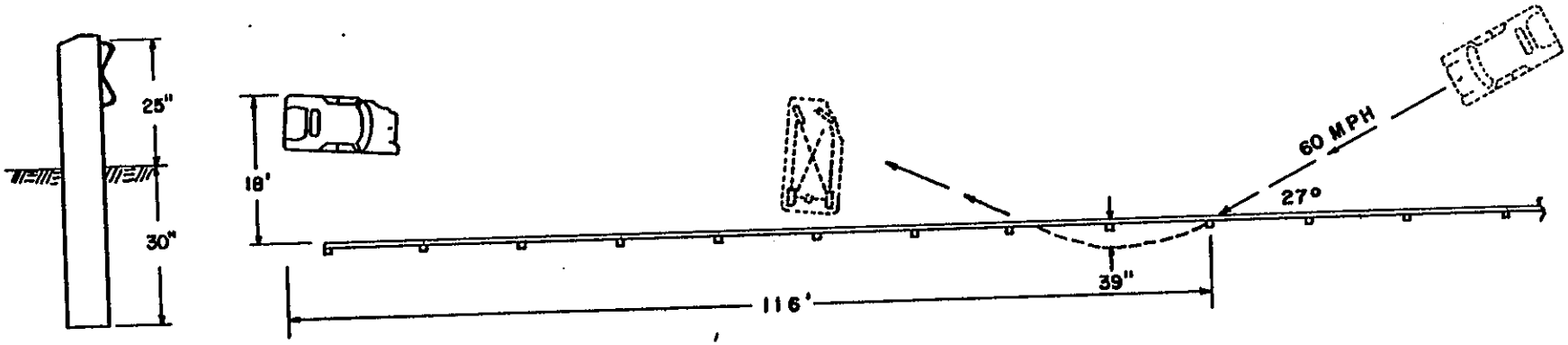

GUARDRAIL	W Section
BRACKET	None
POST	8x8 D.F.
POST SPACING	12'-6" O.C.
LENGTH OF INSTALLATION	212.5'
GROUND CONDITION	Dry

DUMMY INJURY	Left shoulder & side injuries. Possible concussion.
GUARDRAIL DAMAGE	3 Sections damaged beyond repair.
POST DAMAGE	2 Posts damaged beyond repair. 12 Posts out of alignment.
VEHICLE DAMAGE	Total loss
MAX. DYNAMIC DEFLECTION OF RAIL	48"

TEST NO.	1
DATE	7-10-58
VEHICLE	Chev. 52 Sedan
SPEED	60 MPH
IMPACT ANGLE	27°
VEHICLE WEIGHT (W/DUMMY & INSTRUMENTATION)	3980

EXHIBIT 2

ClibPDF - www.fastio.com

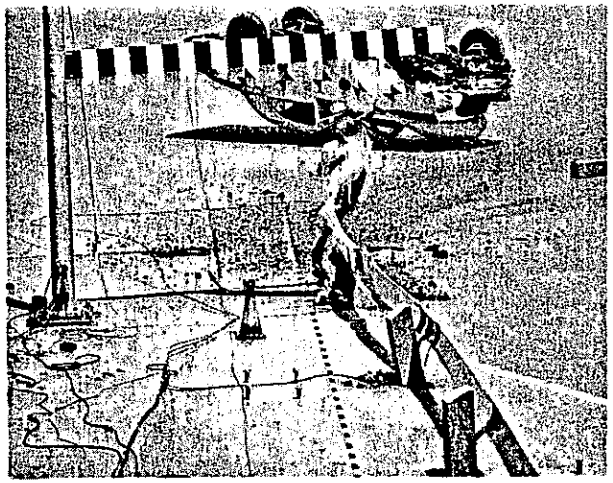

POST IMPACT

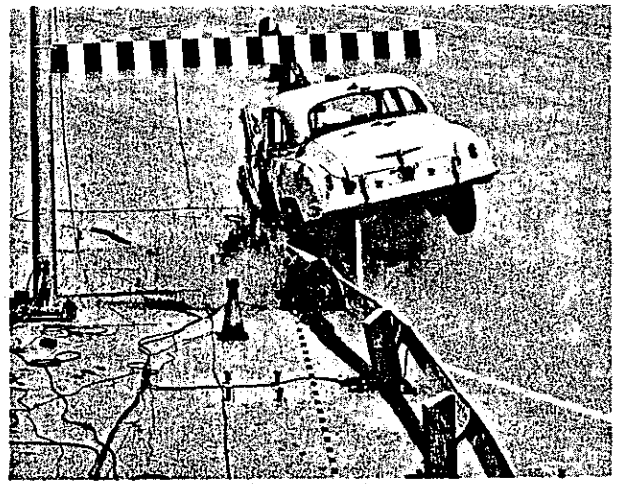

IMPACT + 300 M SEC.

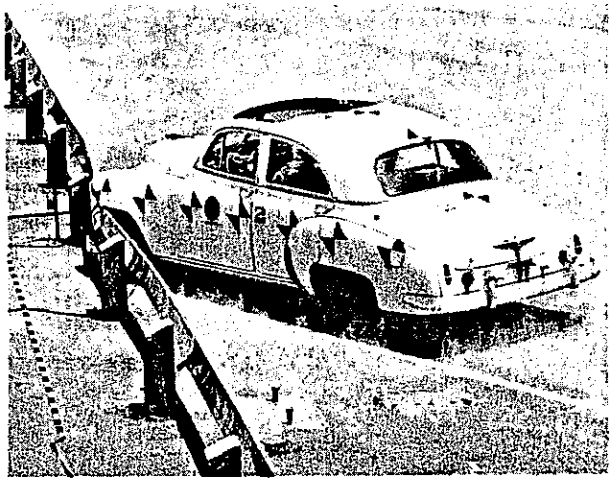

IMPACT + 25 M SEC.

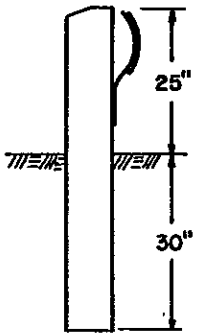

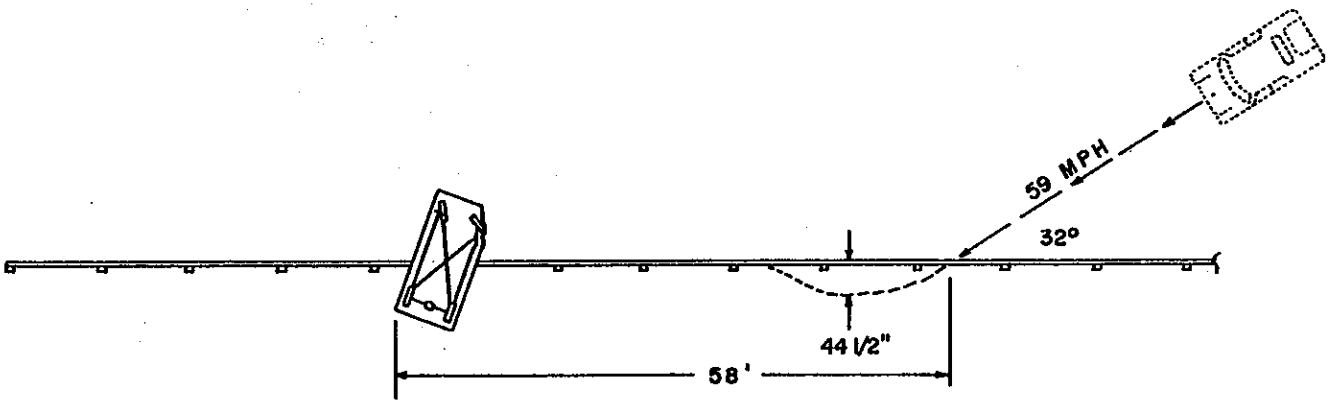

GUARDRAIL ..... Tuthill
BRACKET HG15N
POST ..... 8x8 D.F.
POST SPACING ..... 10' O.C.
LENGTH OF INSTALLATION ... 200'
GROUND CONDITION ..... Dry

DUMMY INJURY ..... Severe head, neck, chest, & internal injuries.
GUARDRAIL DAMAGE ..... 4 Sections damaged beyond repair.

POST DAMAGE ..... 5 Posts damaged beyond repair.
10 Posts out of alignment.
VEHICLE DAMAGE ..... Total loss
MAX. DYNAMIC DEFLECTION OF RAIL ... 55 1/2"

TEST NO. 2
DATE 7-23-58
VEHICLE ..... Chev. 50 Sedan
SPEED ..... 59 MPH
IMPACT ANGLE ..... 32 °
VEHICLE WEIGHT 3980
(W/DUMMY & INSTRUMENTATION)

STATE OF CALIFORNIA DIVISION OF HIGHWAYS MATERIALS & RESEARCH DEPT.

EXHIBIT 3

ClibPDF - www.fastio.com

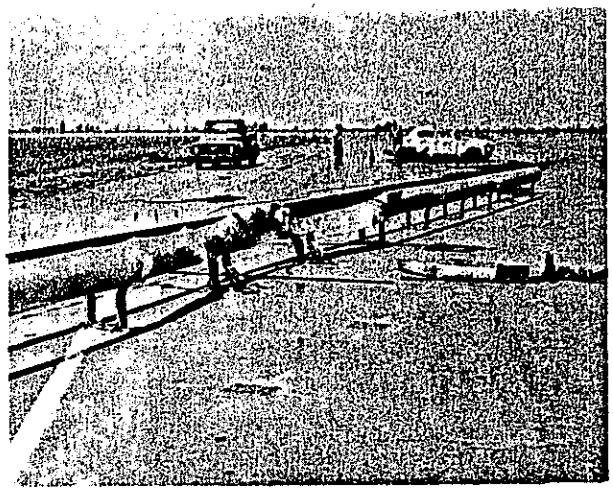

POST IMPACT

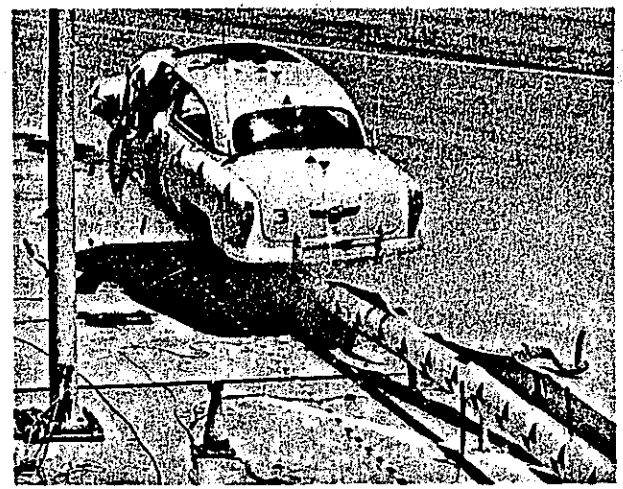

IMPACT + 350 M SEC.

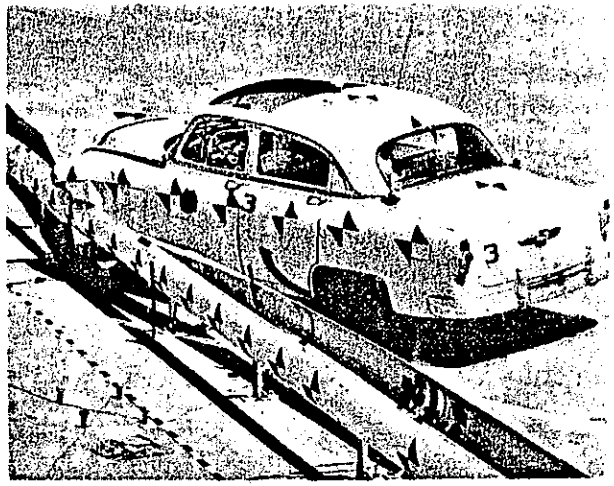

IMPACT + 75 M SEC.

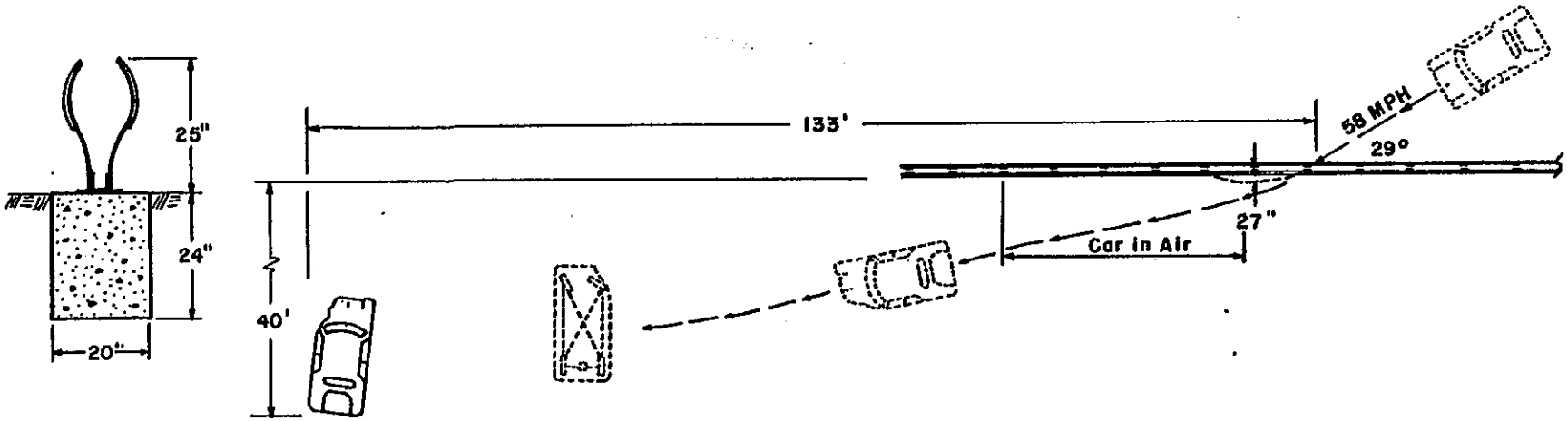

GUARDRAIL .....Tuthill
BRACKET ..... HG 26 N
POST .....HG26 N
POST SPACING .....6'-3" O.C.
LENGTH OF INSTALLATION ... 100'
GROUND CONDITION .....Dry

DUMMY INJURY .....Left shoulder & side injuries. Possible concussion.
GUARDRAIL DAMAGE .....4 Sections damaged beyond repair. Inside rail failed.
POST DAMAGE .....6 Brackets damaged beyond repair.

VEHICLE DAMAGE .....Total loss
MAX. DYNAMIC DEFLECTION OF RAIL... 27" Before failure.

TEST NO. 3
DATE 8-6-58
VEHICLE .....Chev. 53 Sedan
SPEED ..... 58 MPH
IMPACT ANGLE ..... 29°
VEHICLE WEIGHT... 3980
(W/DUMMY & INSTRUMENTATION)

EXHIBIT

ClibPDF - www.fastio.com

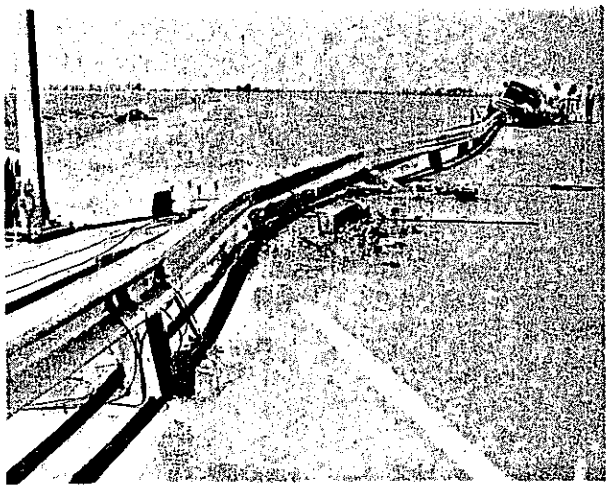

POST IMPACT

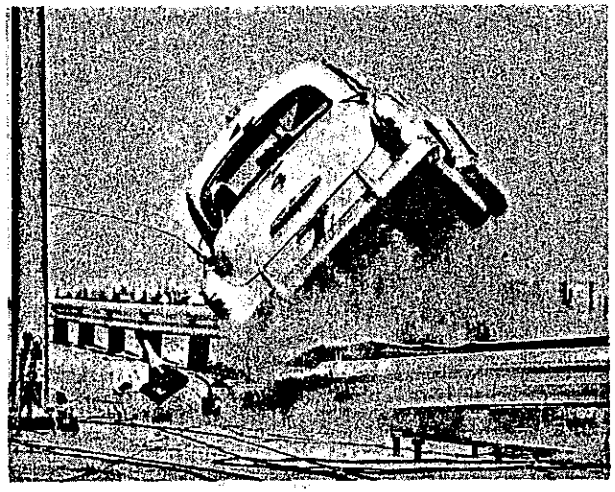

IMPACT + 450 M SEC.

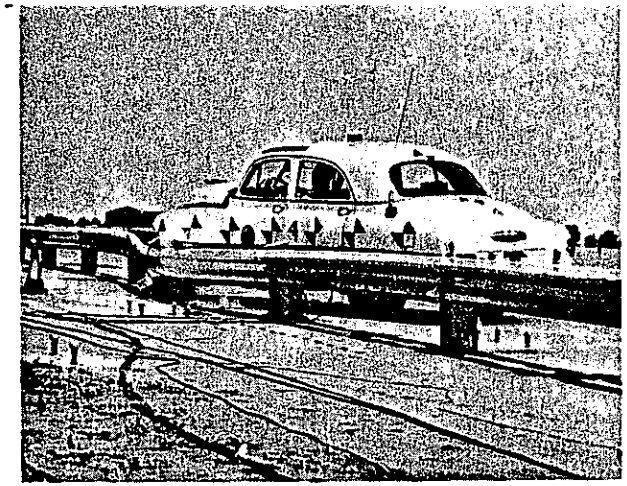

IMPACT + 100 M SEC.

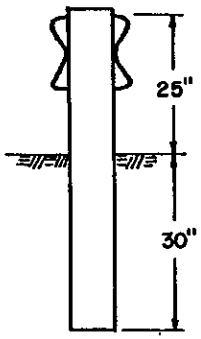

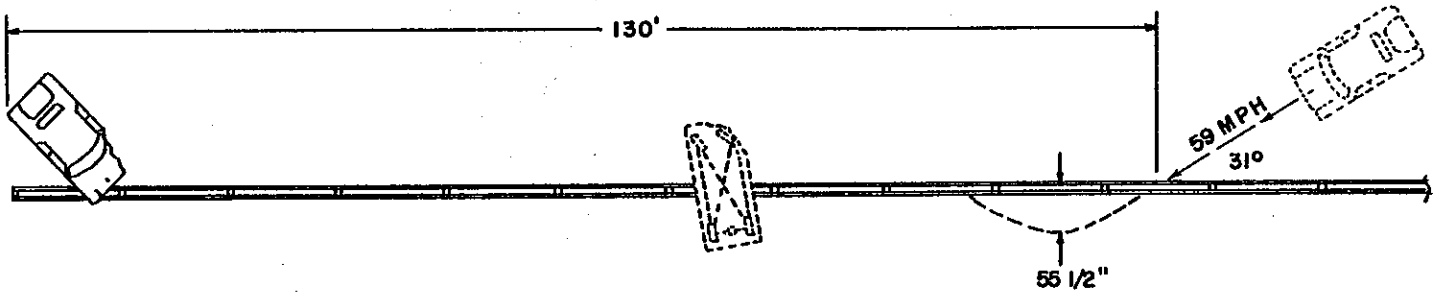

GUARDRAIL ..... W Section
BRACKET ..... None
POST ..... 8x8 D.F.
POST SPACING ..... 12'-6" O.C.
LENGTH OF INSTALLATION... 200'
GROUND CONDITION ..... : Dry

DUMMY INJURY ..... Severe neck, head & left shoulder injuries.
GUARDRAIL DAMAGE ..... 3 Sections damaged beyond repair.

POST DAMAGE ..... 1 Post damaged beyond repair.
7 Posts out of alignment.
VEHICLE DAMAGE ..... Total loss.
MAX. DYNAMIC DEFLECTION OF RAIL ... 60 "

TEST NO. 4
DATE 8-20-58
VEHICLE ..... Chev. 51 Sedan
SPEED ..... 59 MPH
IMPACT ANGLE ..... 31°
VEHICLE WEIGHT... 3980
(W/DUMMY & INSTRUMENTATION)

STATE OF CALIFORNIA DIVISION OF HIGHWAYS MATERIALS & RESEARCH DEPT.

EXHIBIT 5

ClibPDF - www.fastio.com

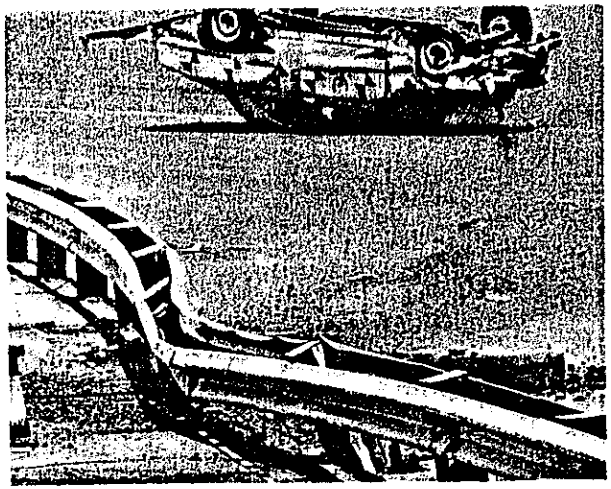

POST IMPACT

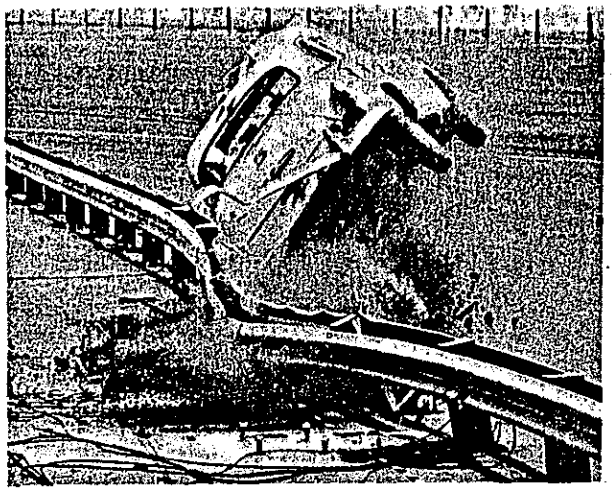

IMPACT + 500 M SEC.

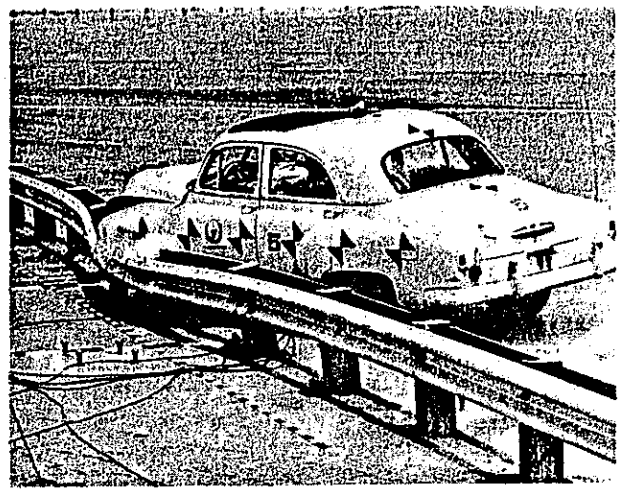

IMPACT + 100 M SEC.

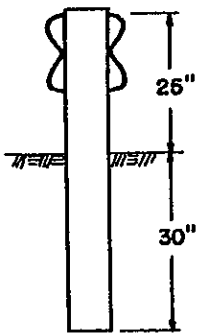

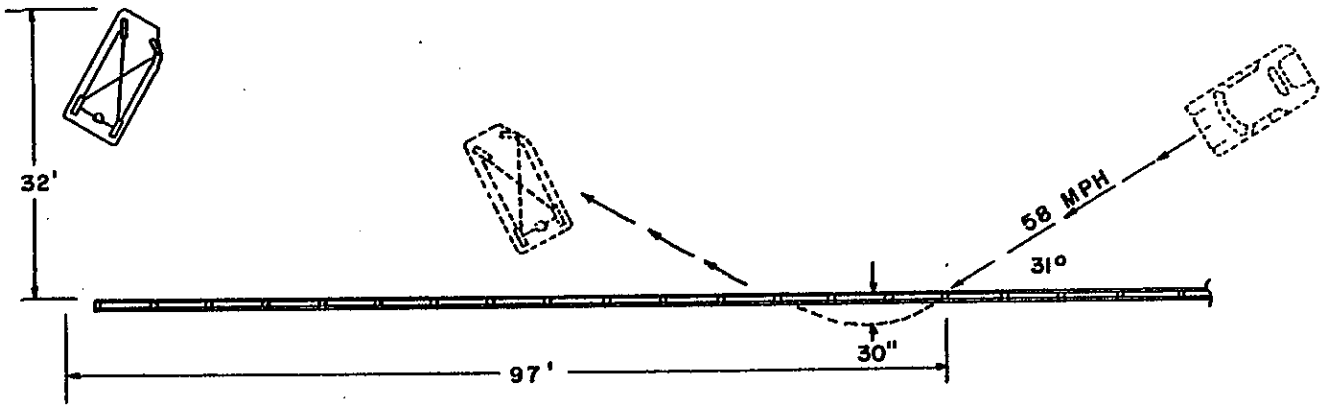

GUARDRAIL ..... W Section
BRACKET ..... None
POST ..... 8x8 D.F.
POST SPACING ..... 6'-3" O.C.
LENGTH OF INSTALLATION... 200'
GROUND CONDITION ..... Dry

DUMMY INJURY ..... Severe left shoulder & arm, head & neck injuries.
GUARDRAIL DAMAGE ..... 2 Sections damaged beyond repair.

POST DAMAGE ..... 3 Posts damaged beyond repair.
5 Posts out of alignment.
VEHICLE DAMAGE ..... Total loss.
MAX. DYNAMIC DEFLECTION OF RAIL ... 40.5"

TEST NO. 5
DATE 8-27-58
VEHICLE ..... Chev. 51 Sedan
SPEED ..... 58 MPH
IMPACT ANGLE ..... 31°
VEHICLE WEIGHT ... 3980
(W/DUMMY & INSTRUMENTATION)

EXHIBIT

ClibPDF - www.fastio.com

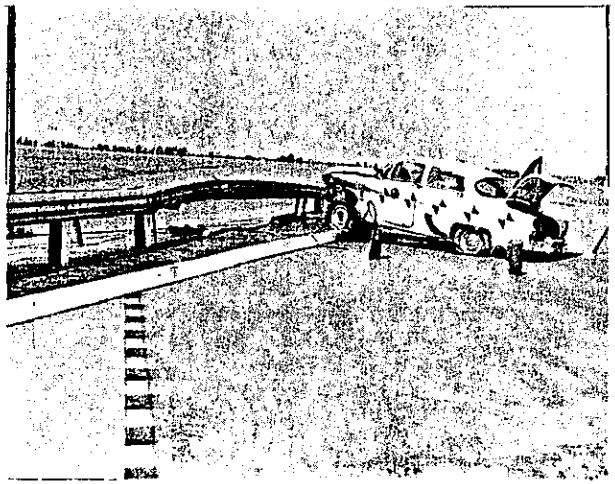

POST IMPACT

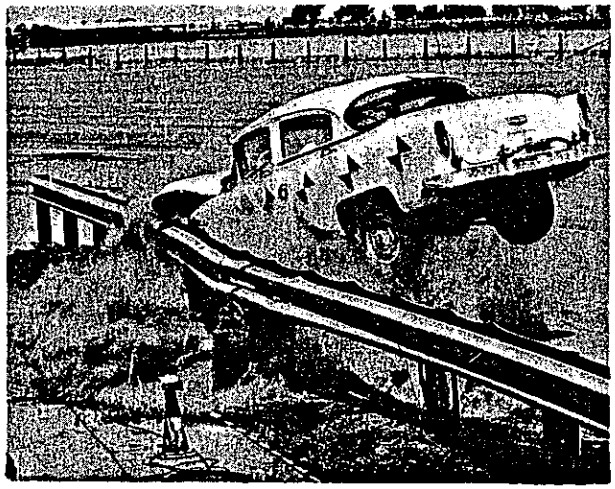

IMPACT +600 M SEC.

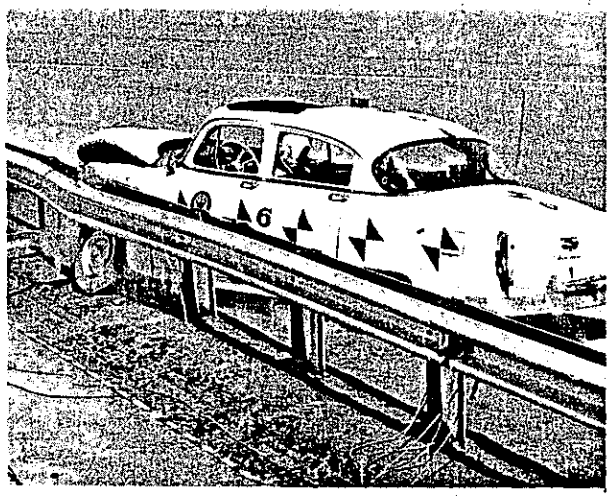

IMPACT +100 M SEC.

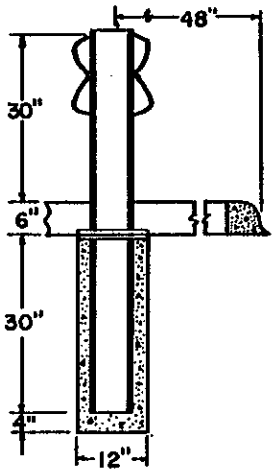

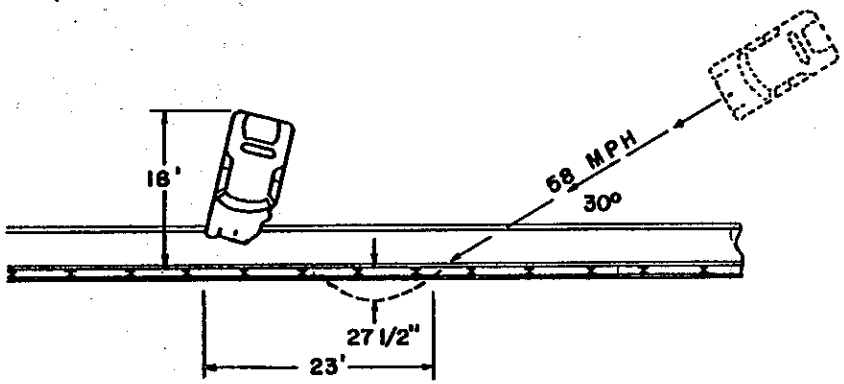

GUARDRAIL ..... W Section
BRACKET ..... None
POST ..... 6" WF 15.5 #
POST SPACING ..... 6'-3" O.C.
LENGTH OF INSTALLATION ... 100'
GROUND CONDITION ..... Dry

DUMMY INJURY ..... Severe head, chest & neck injuries.
GUARDRAIL DAMAGE ..... 4 Sections damaged beyond repair.

POST DAMAGE ..... 3 Posts knocked out.
2 Posts out of alignment.
VEHICLE DAMAGE ..... Total loss.
MAX. DYNAMIC DEFLECTION OF RAIL ... 36"

TEST NO. 6
DATE 9-10-58
VEHICLE ..... Chev. 54 Sedan
SPEED ..... 58 M P H
IMPACT ANGLE ..... 30°
VEHICLE WEIGHT 4000
(W/DUMMY & INSTRUMENTATION)

EXHIBIT 7

STATE OF CALIFORNIA DIVISION OF HIGHWAYS MATERIALS & RESEARCH DEPT.

ClibPDF - www.fastio.com

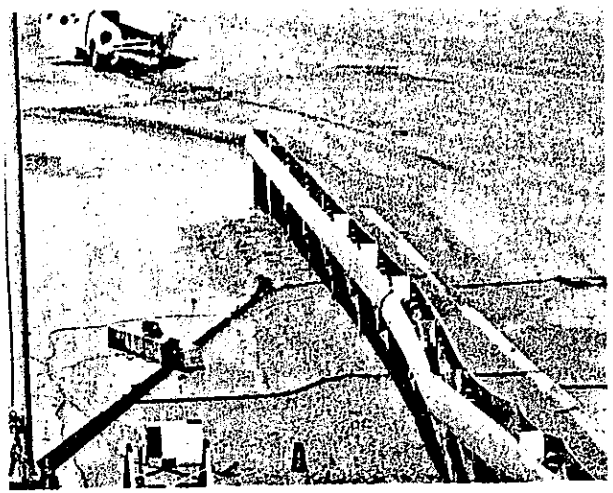

POST IMPACT

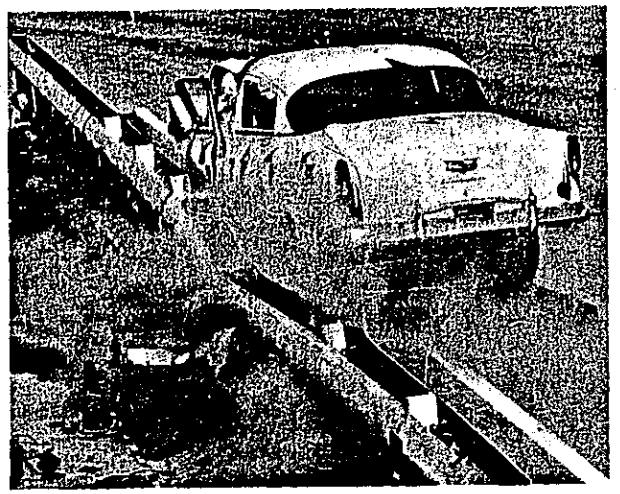

IMPACT +350 M SEC.

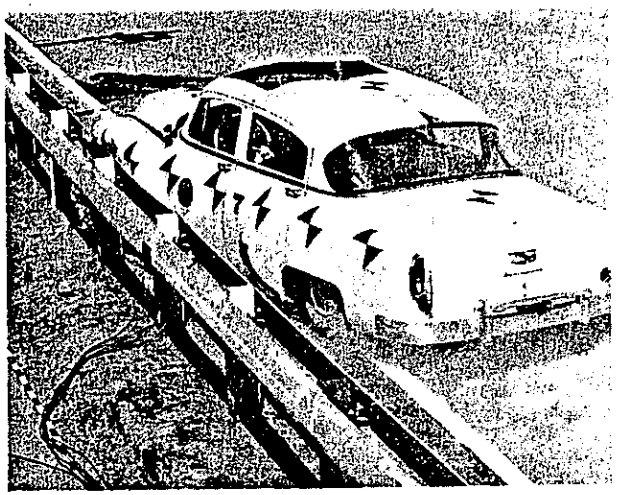

IMPACT + 50 M SEC.

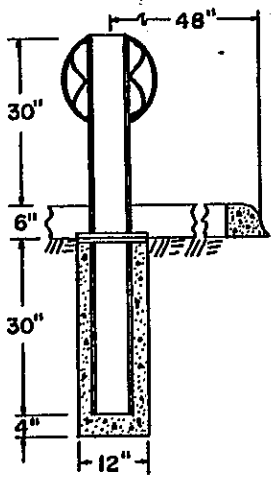

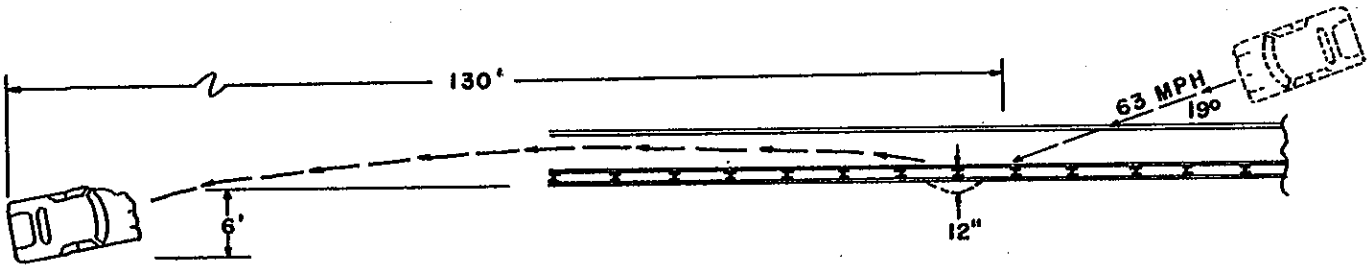

GUARDRAIL ..... Tuthill
BRACKET ..... HG 32 N
POST ..... 6" WF 15.5 #
POST SPACING ..... 6'-3" O.C.
LENGTH OF INSTALLATION... 100'
GROUND CONDITION ..... Dry

DUMMY INJURY ..... Severe head, chest & internal injuries.
GUARDRAIL DAMAGE ..... 2 Sections damaged beyond repair.

POST DAMAGE ..... 2 Posts damaged beyond repair.
2 Posts out of alignment.

VEHICLE DAMAGE ..... Total loss.
MAX. DYNAMIC DEFLECTION OF RAIL... 19"

TEST NO. 7
DATE 9-18-58
VEHICLE ..... Chev. 54 Sedan
SPEED ..... 63 MPH
IMPACT ANGLE ..... 19°
VEHICLE WEIGHT.... 4050
(W/DUMMY & INSTRUMENTATION)

EXHIBIT

ClibPDF - www.fastio.com

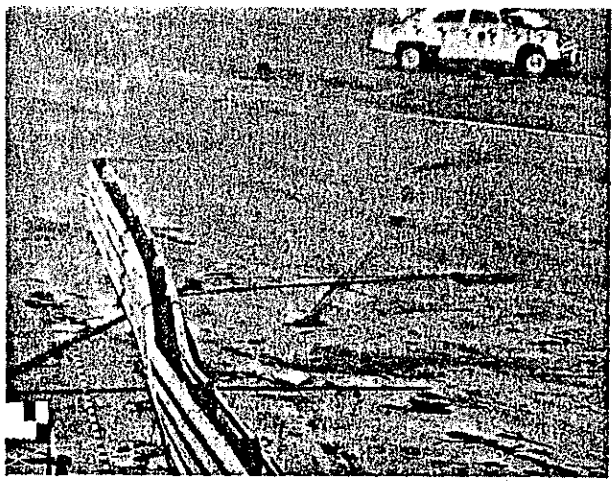

POST IMPACT

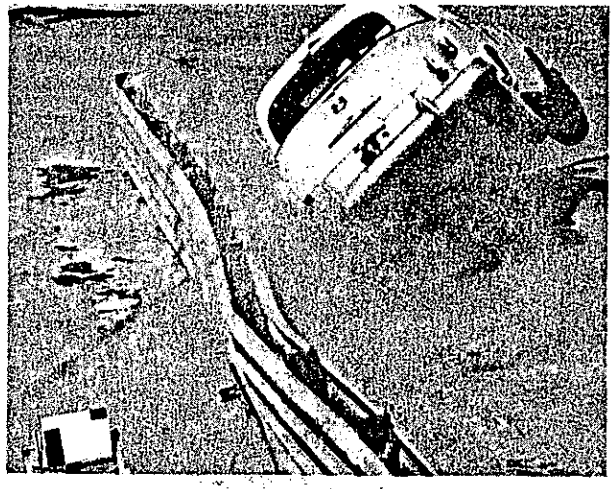

IMPACT + 500 M SEC.

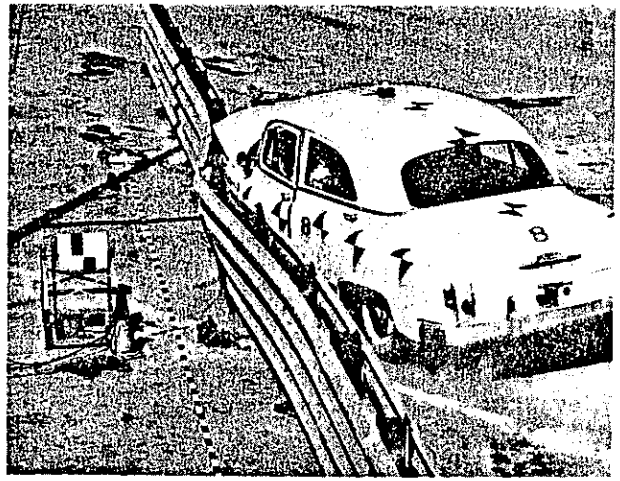

IMPACT + 100 M SEC.

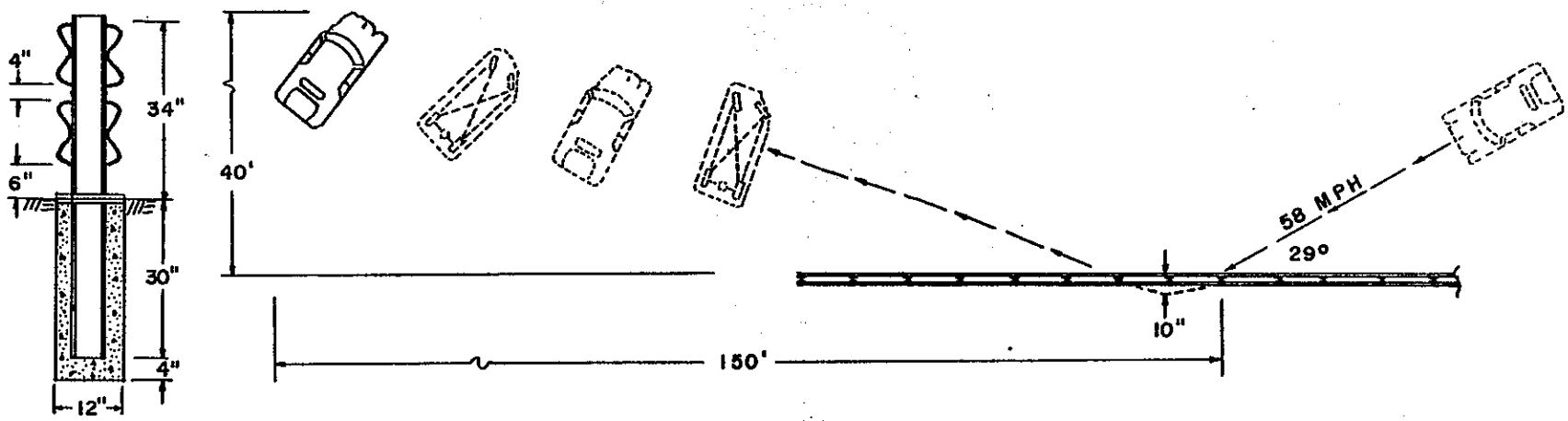

GUARDRAIL ..... W Section
BRACKET ..... None
POST ..... 6" WF 15.5 #
POST SPACING ..... 6'-3" O.C.
LENGTH OF INSTALLATION ... 100'
GROUND CONDITION ..... Dry

DUMMY INJURY ..... Severe head, shoulder & arm injuries. Multiple lacerations & concussion.
GUARDRAIL DAMAGE ..... 2 Sections damaged beyond repair.
POST DAMAGE ..... All can be repaired. 5 Posts out of alignment.
VEHICLE DAMAGE ..... Total loss.
MAX. DYNAMIC DEFLECTION OF RAIL ... 15 "

TEST NO 8
DATE 10-2-58
VEHICLE ..... Chev. 52 Sedan
SPEED ..... 58 M.P.H
IMPACT ANGLE ..... 29°
VEHICLE WEIGHT ... 4050
(W/DUMMY & INSTRUMENTATION)

STATE OF CALIFORNIA DIVISION OF HIGHWAYS MATERIALS & RESEARCH DEPT.

EXHIBIT 9

ClibPDF - www.fastio.com

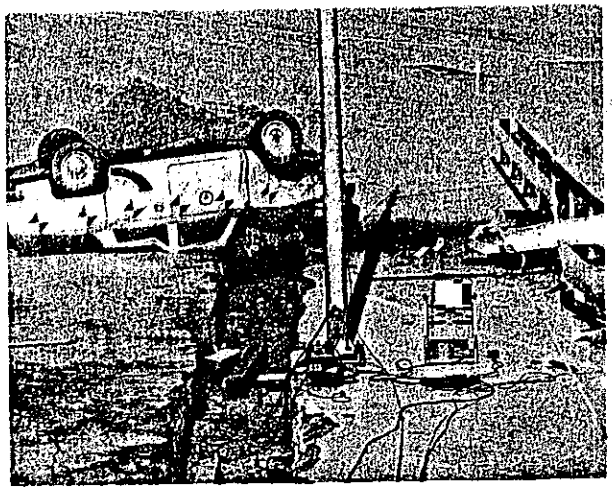

POST IMPACT

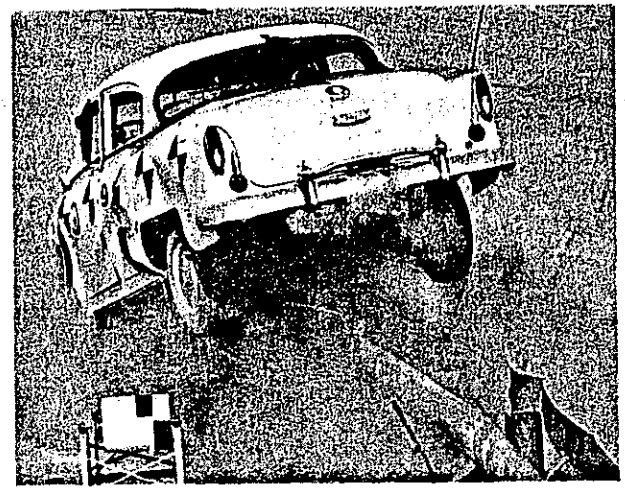

IMPACT + 450 M SEC.

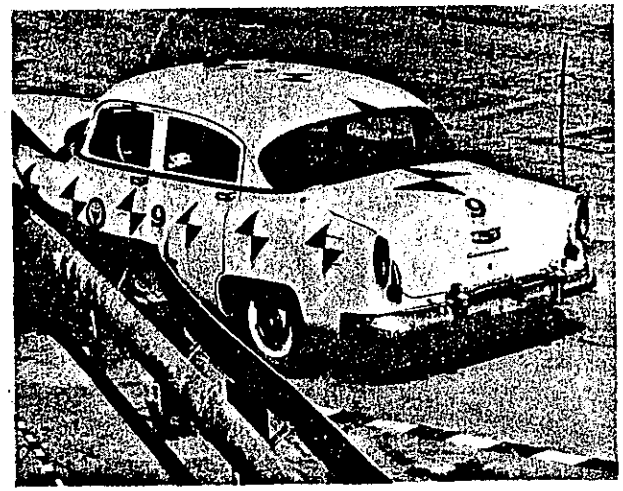

IMPACT + 100 M SEC.

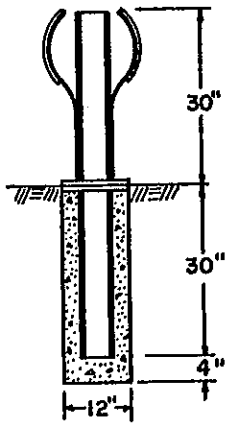

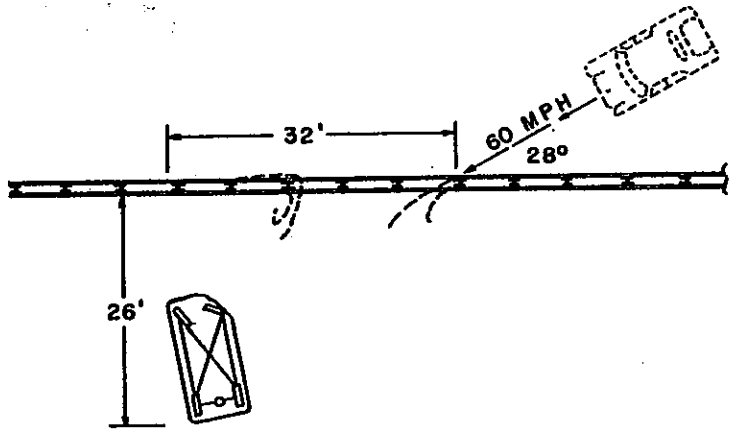

GUARDRAIL .....Tuthill
BRACKET HG15N
POST .....6" WF 15.5 #
POST SPACING .....6'-3" O.C.
LENGTH OF INSTALLATION...100'
GROUND CONDITION .....Dry

DUMMY INJURY .....Head, neck, chest & possible internal injuries.
GUARDRAIL DAMAGE ..... 4 Sections damaged beyond repair.
Both rails failed.
POST DAMAGE ..... 2 Posts damaged beyond repair.
2 Posts out of alignment.
VEHICLE DAMAGE ..... Total loss.
MAX. DYNAMIC DEFLECTION OF RAIL... 15" Before failure.

TEST NO. 9
DATE 10-15-58
VEHICLE .....Chev. 54 Sedan
SPEED .....60 MPH
IMPACT ANGLE .....28°
VEHICLE WEIGHT ...3970
(W/DUMMY & INSTRUMENTATION)

EXHIBIT

ClibPDF - www.fastio.com

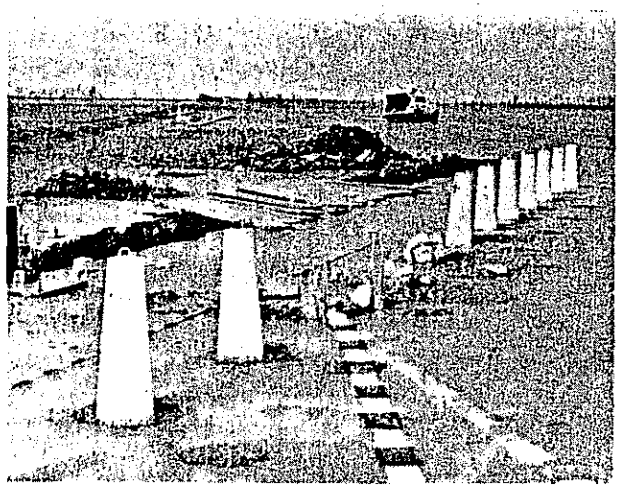

POST IMPACT

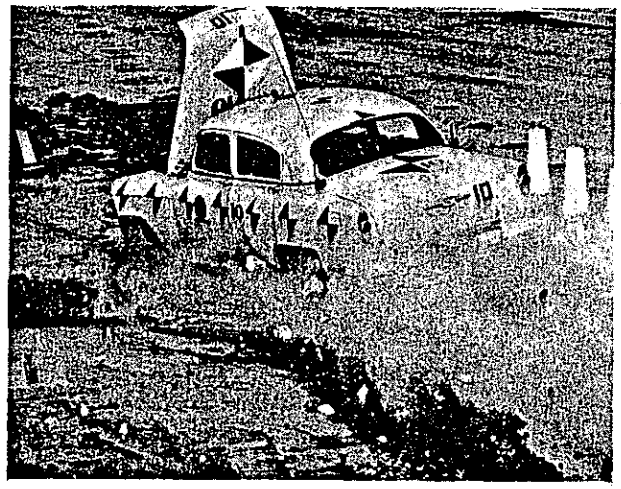

IMPACT + 500 M SEC.

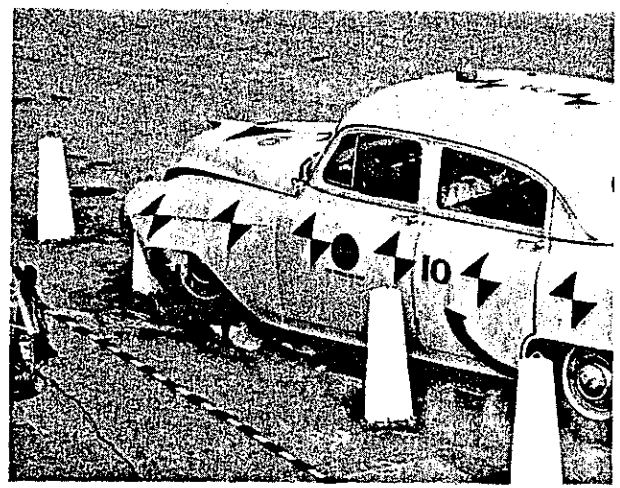

IMPACT + 25 M SEC.

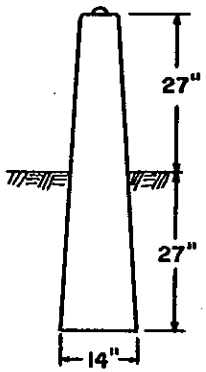

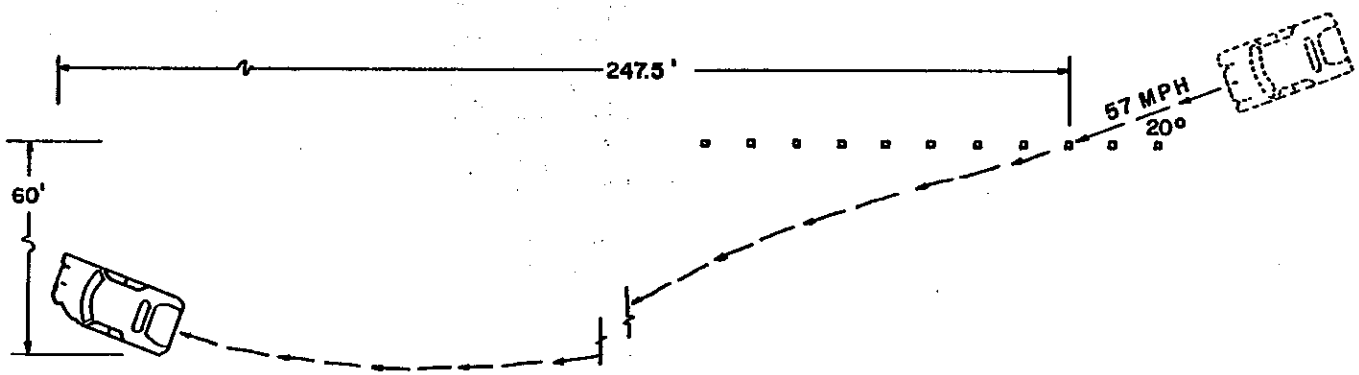

GUARDRAIL .....None
BRACKET .....None
POST .....P.C.C.
POST SPACING .....5' O.C.
LENGTH OF INSTALLATION...60'
GROUND CONDITION .....Dry

DUMMY INJURY ..... Minor Bruises
GUARDRAIL DAMAGE .....No rail.

POST DAMAGE ..... 3 Posts demolished.
1 Post out of alignment.
VEHICLE DAMAGE .....Est. $500.
MAX. DYNAMIC DEFLECTION OF RAIL...No rail.

TEST NO. 10
DATE 10-23-58
VEHICLE .....Chev. 53 Sedan
SPEED .....57 MPH
IMPACT ANGLE.... 20°
VEHICLE WEIGHT...3970
(W/DUMMY & INSTRUMENTATION)

STATE OF CALIFORNIA DIVISION OF HIGHWAYS MATERIALS & RESEARCH DEPT.

EXHIBIT 11

ClibPDF - www.fastio.com

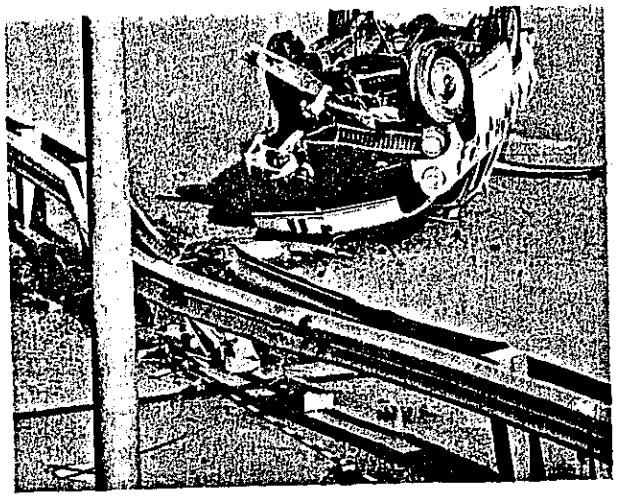

POST IMPACT

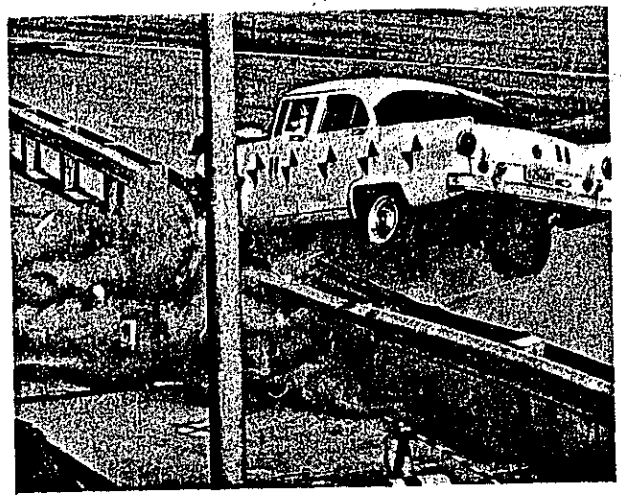

IMPACT + 450 M SEC.

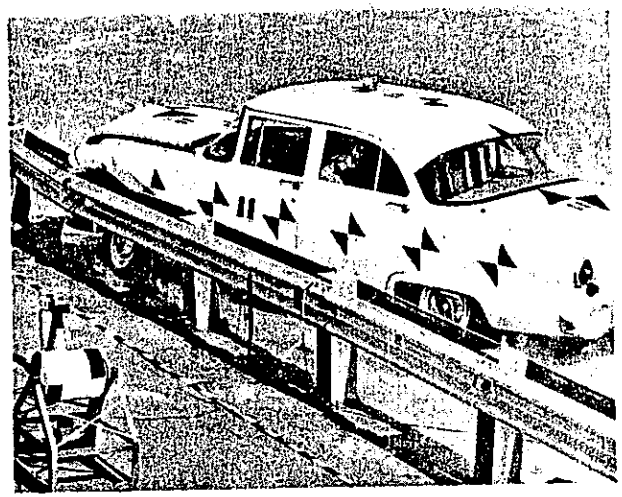

IMPACT + 50 M SEC.

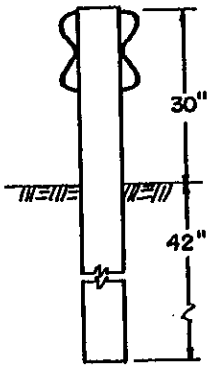

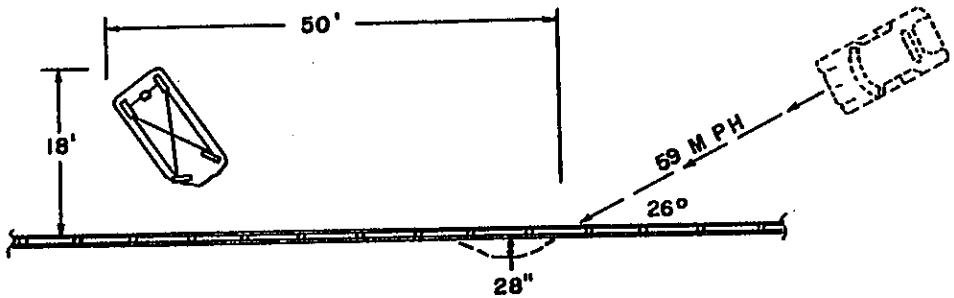

GUARDRAIL .....W Section
BRACKET .....None
POST .....8x8 DF.
POST SPACING .....6'-3" O.C.
LENGTH OF INSTALLATION...200'
GROUND CONDITION .....Dry

DUMMY INJURY .....Left shoulder & side, chest & internal injuries.
GUARDRAIL DAMAGE .....6 Sections damaged beyond repair.

POST DAMAGE .....3 Posts damaged beyond repair.
3 Posts out of alignment.

VEHICLE DAMAGE .....Total loss.
MAX. DYNAMIC DEFLECTION OF RAIL...40"

TEST NO. 11
DATE 10-30-58
VEHICLE .....Ford 55 Sedan
SPEED .....59 MPH
IMPACT ANGLE .....26°
VEHICLE WEIGHT...4050
(W/DUMMY & INSTRUMENTATION)

EXHIBIT 12

STATE OF CALIFORNIA DIVISION OF HIGHWAYS MATERIALS & RESEARCH DEPT.

ClibPDF - www.fastio.com

POST IMPACT

IMPACT +500 M SEC.

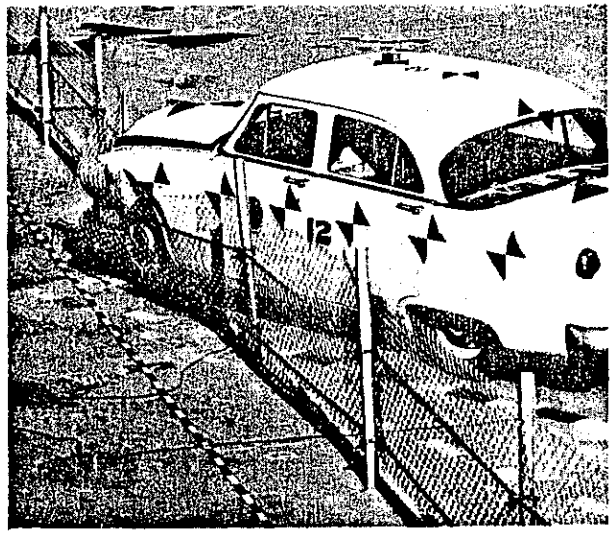

IMPACT + 50 M SEC.

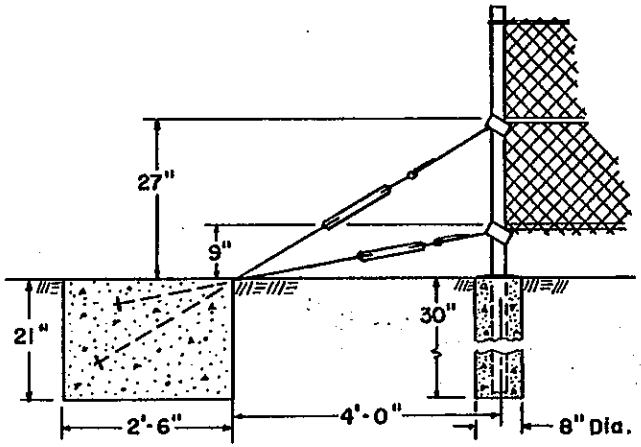

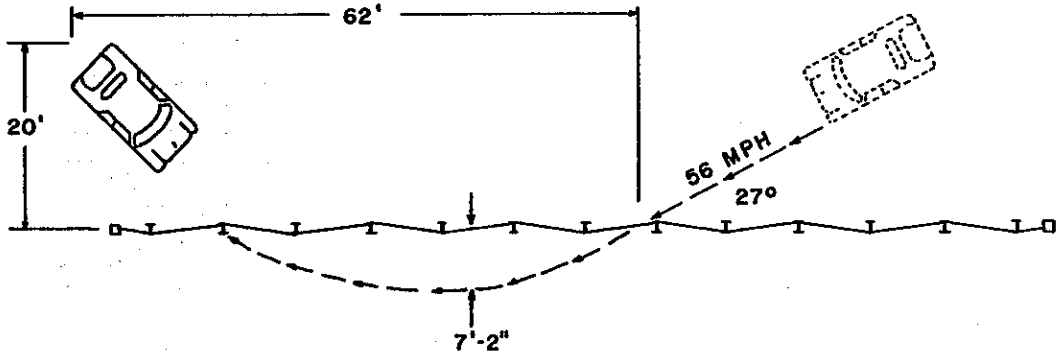

GUARDRAIL ..... Chain Link Fence w/ 3/4" cables 9" & 27" above Pvmt.

POST ..... 2 1/4" - 4.1 #
H Section Fence Post.

POST SPACING ..... 8' O.C.

LENGTH OF INSTALLATION... 96'

GROUND CONDITION ..... Dry

DUMMY INJURY ..... Possible neck injuries & minor bruises.

GUARDRAIL DAMAGE ..... 50' of Fence knocked out. No damage to Cable.

POST DAMAGE ..... 7 Posts damaged beyond repair. 6 Posts Bent.

VEHICLE DAMAGE ..... $ 600.

MAX. DYNAMIC DEFLECTION OF RAIL .. 7' - 2"

VEHICLE DECELERATION (PEAK)..... Long. 69 G ... Transv. 154 G

DUMMY DECELERATION (PEAK) ..... Long 7 G ... Transv. 9.5 G

TEST NO. 12

DATE 11-13-58

VEHICLE ..... Ford 52 Sedan

SPEED ..... 56 MPH

IMPACT ANGLE .... 27 °

VEHICLE WEIGHT ... 4002 (W/DUMMY & INSTRUMENTATION)

STATE OF CALIFORNIA DIVISION OF HIGHWAYS MATERIALS & RESEARCH DEPT.

EXHIBIT 13

ClibPDF - www.fastio.com

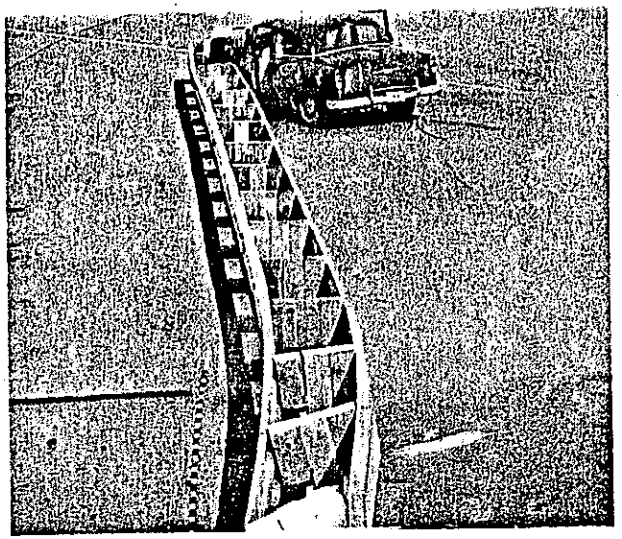

POST IMPACT

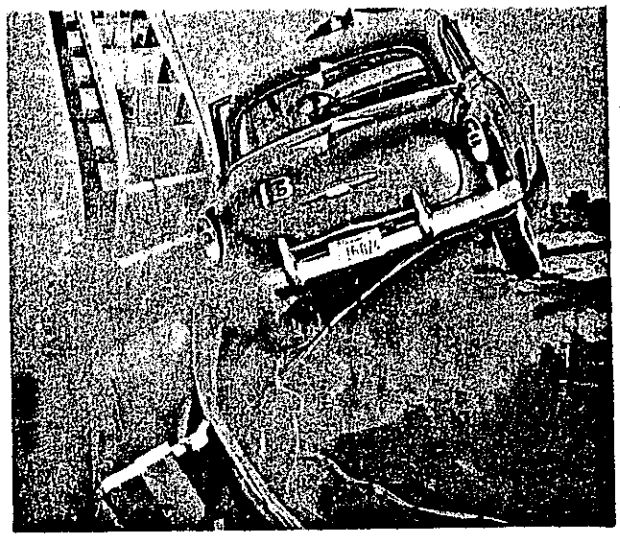

IMPACT + 500 M SEC.

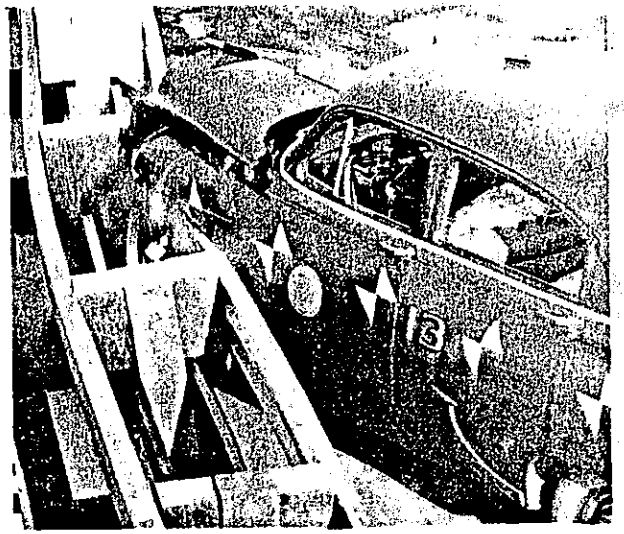

IMPACT + 100 M SEC.

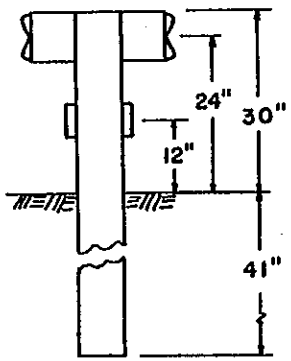

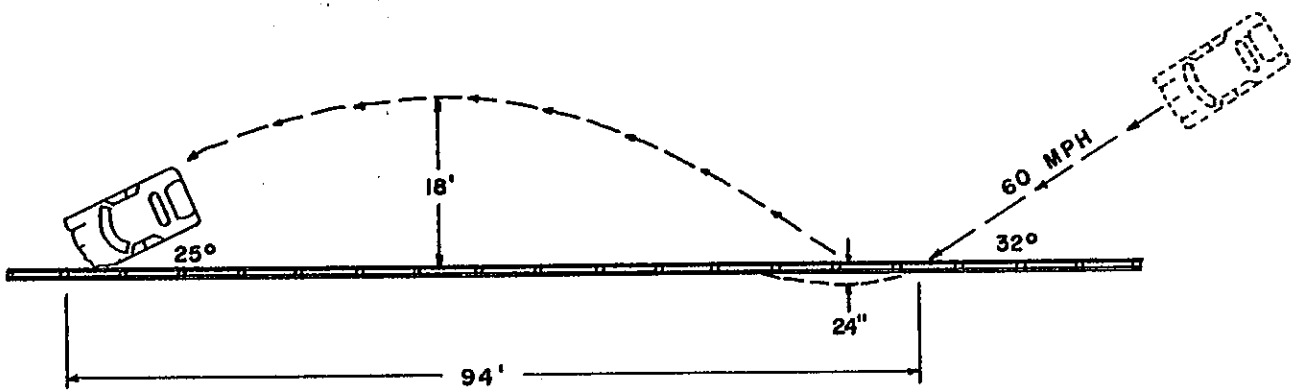

GUARDRAIL ..... W Section
CHANNEL ..... 6" ⊓ 8.2 #
BRACKET ..... 8x8x12 D.F Block
POST ..... 8x8 D.F.
POST SPACING ..... 6'-3" O.C.
LENGTH OF INSTALLATION ... 125'
GROUND CONDITION ..... Dry

DUMMY INJURY ..... Possible left shoulder, arm & side injuries.
GUARDRAIL DAMAGE ..... 4 Sections damaged beyond repair.
CHANNEL DAMAGE ..... 4 Sections damaged beyond repair.
POST DAMAGE ..... 3 Posts damaged beyond repair.

VEHICLE DAMAGE ..... $ 900
MAX. DYNAMIC DEFLECTION OF RAIL ... 37"
VEHICLE DECELERATION (PEAK) .... Long. 104 G ... Transv. 198G
DUMMY DECELERATION (PEAK) .... Long. 16 G ... Transv. 18 G

TEST NO. 13
DATE 12-18-58
VEHICLE ..... Chev. 53 Sedan
SPEED ..... 60 MPH
IMPACT ANGLE .... 32°
VEHICLE WEIGHT ... 4000
(W/DUMMY & INSTRUMENTATION)

EXHIBIT

ClibPDF - www.fastio.com

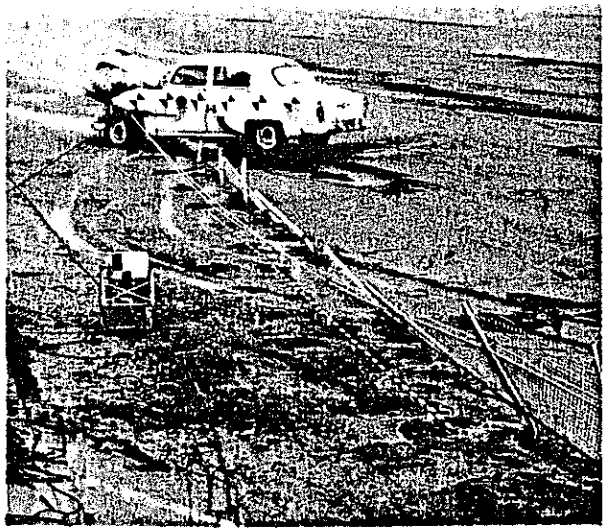

POST IMPACT

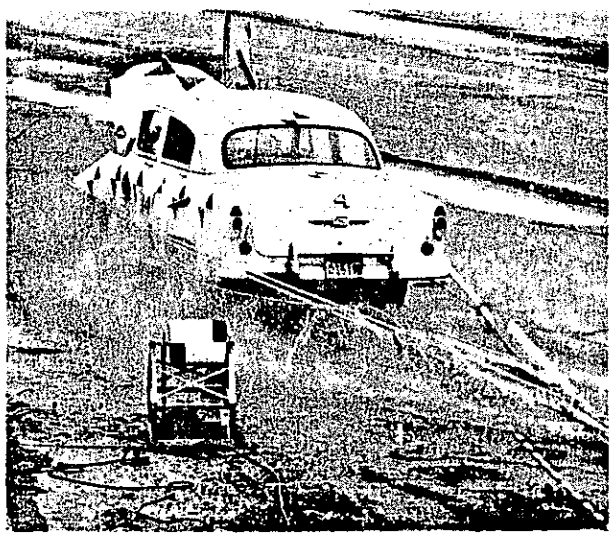

IMPACT + 400 M SEC.

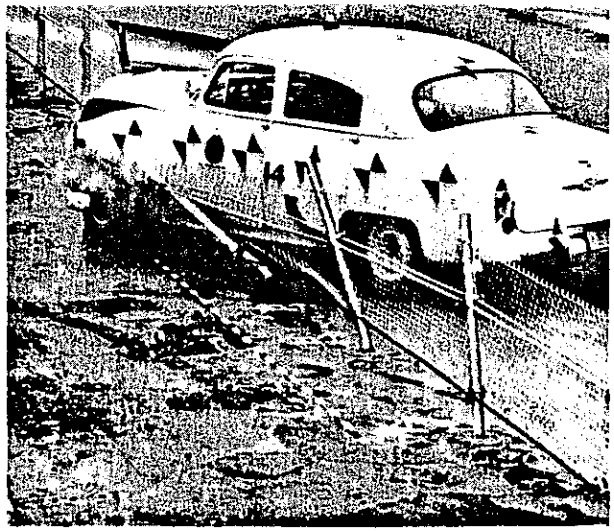

IMPACT + 150 M SEC.

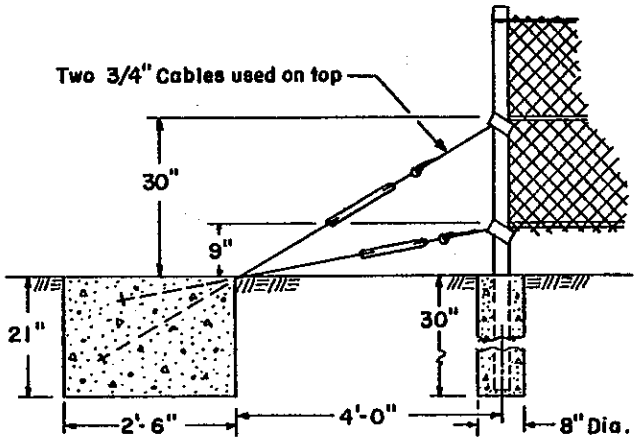

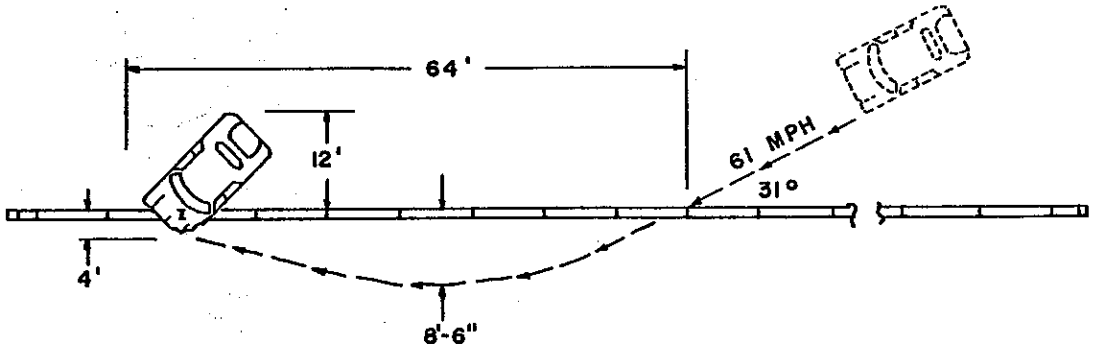

GUARDRAIL ..... Chain Link Fence w/ 3/4" cables 9" & 30" above Pvmt.

POST ..... 2 1/4"-4.1 # H Section Fence Post.

POST SPACING ..... 8' O.C.

LENGTH OF INSTALLATION ... 192'

GROUND CONDITION ..... Dry

DUMMY INJURY ..... Minor Bruises & possible neck injuries.

GUARDRAIL DAMAGE ..... 80' of Fence knocked out. No damage to Cables.

POST DAMAGE ..... 11 Posts damaged beyond repair.

VEHICLE DAMAGE ..... $600.

MAX. DYNAMIC DEFLECTION OF RAIL ... 8'-6"

TEST NO. 14

DATE 12-26-58

VEHICLE ..... Chev. 53 Sedan

SPEED ..... 61 MPH

IMPACT ANGLE .... 31°

VEHICLE WEIGHT ... 4000 (W/DUMMY & INSTRUMENTATION)

STATE OF CALIFORNIA DIVISION OF HIGHWAYS MATERIALS & RESEARCH DEPT.

EXHIBIT 15

ClibPDF - www.fastio.com

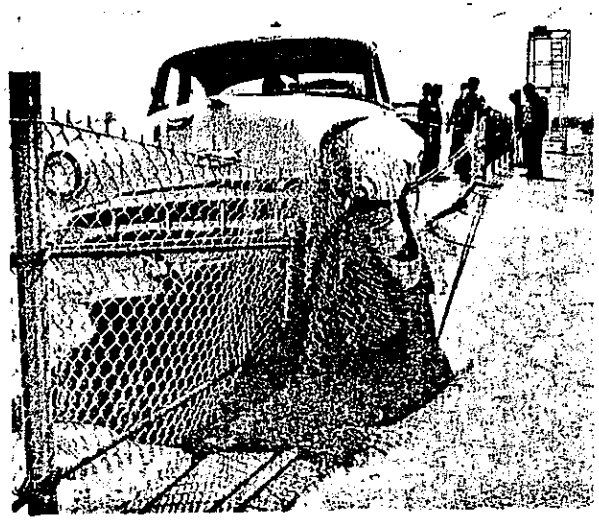

POST IMPACT

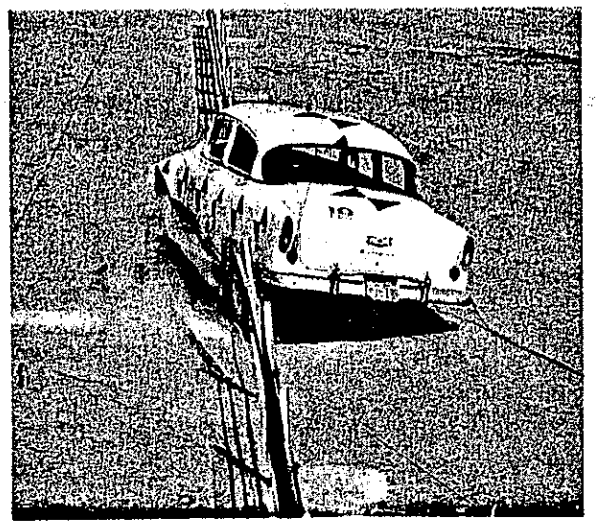

IMPACT + 350 M SEC.

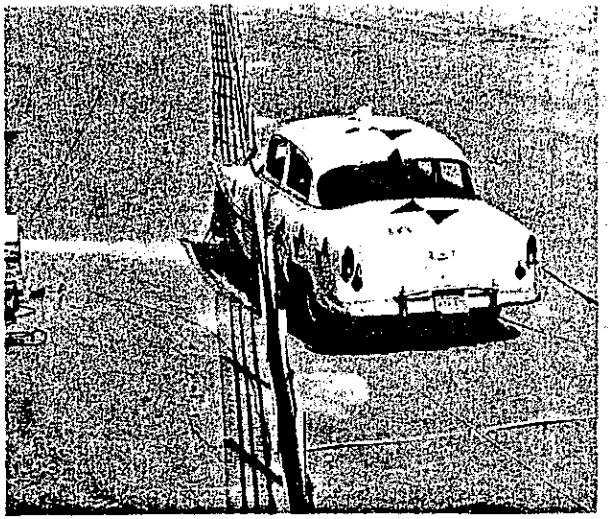

IMPACT + 100 M SEC.

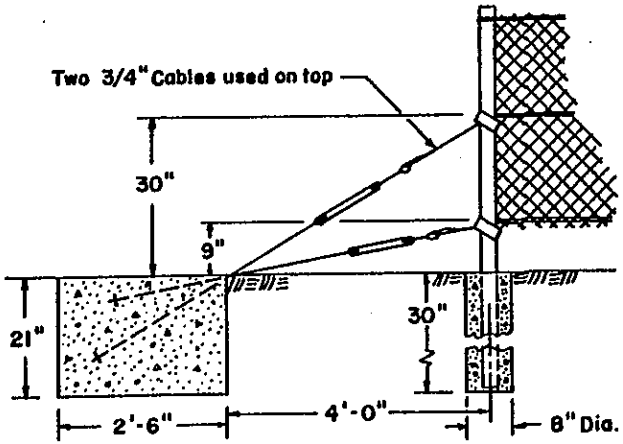

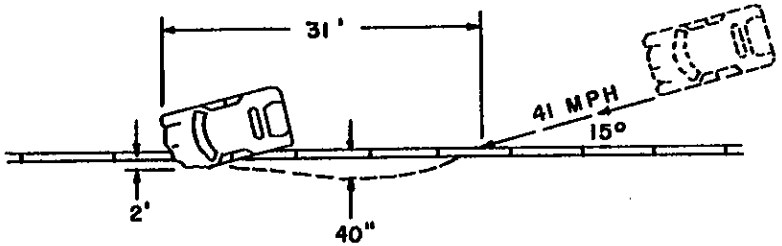

GUARDRAIL ..... 36" Chain Link Fence w/3/4" cables 9" & 30" above pvmt.

POST ..... 2 1/4"-4.1 # H Section Fence Post

POST SPACING ..... 8' O.C.

LENGTH OF INSTALLATION ...400'

GROUND CONDITION ..... Dry

DUMMY INJURY ..... Minor Bruises

GUARDRAIL DAMAGE ..... 35' of Fence knocked out. No damage to cables.

POST DAMAGE ..... 4 Posts damaged beyond repair.

VEHICLE DAMAGE ..... $400.

MAX. DYNAMIC DEFLECTION OF RAIL... 40"

VEHICLE DECELERATION (PEAK)... Long. 55 G ... Transv. 22 G

DUMMY DECELERATION (PEAK)..... Long. 3 G ...Transv. 2 G

TEST NO 19

DATE 3-5-59

VEHICLE ..... Chev. 53 Sedan

SPEED ..... 41 MPH

IMPACT ANGLE .....15°

VEHICLE WEIGHT.... 3700 (W/DUMMY & INSTRUMENTATION)

STATE OF CALIFORNIA DIVISION OF HIGHWAYS MATERIALS & RESEARCH DEPT.

EXHIBIT

ClibPDF - www.fastio.com

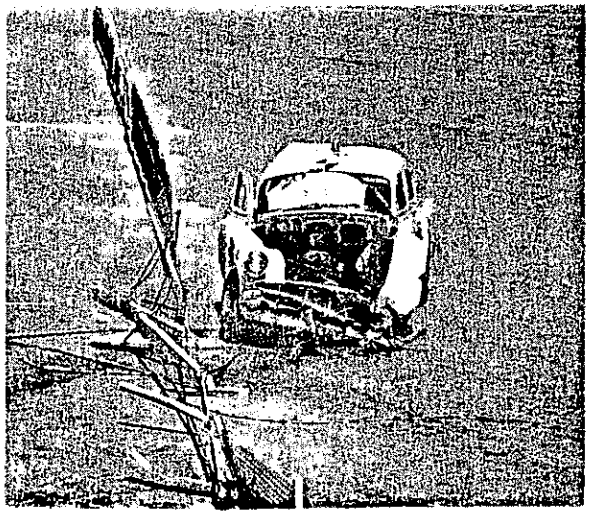

POST IMPACT

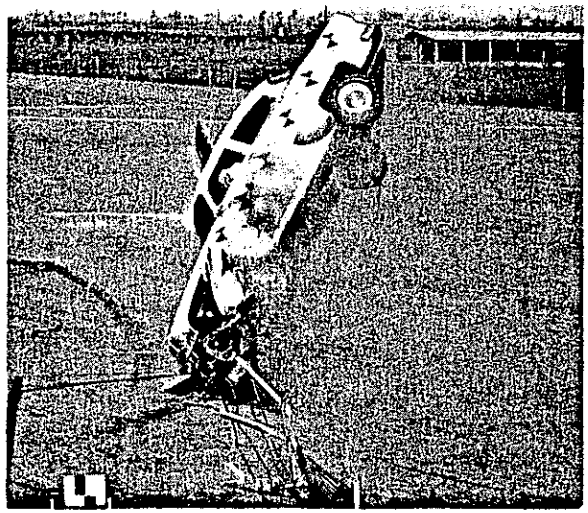

IMPACT + 1000M SEC.

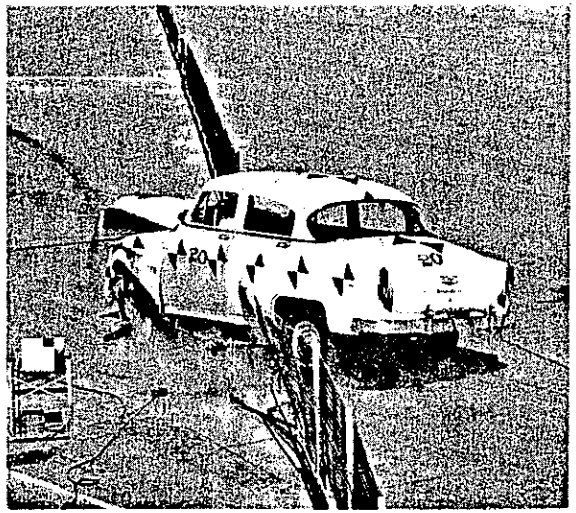

IMPACT + 150 M SEC.

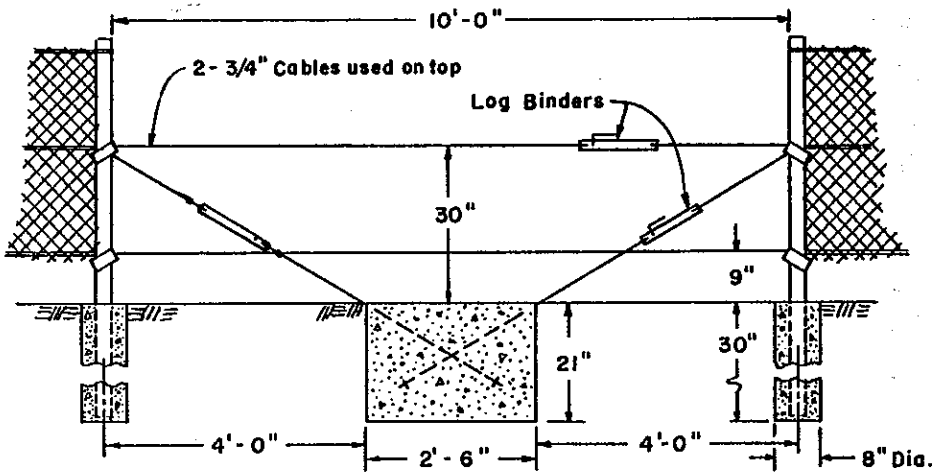

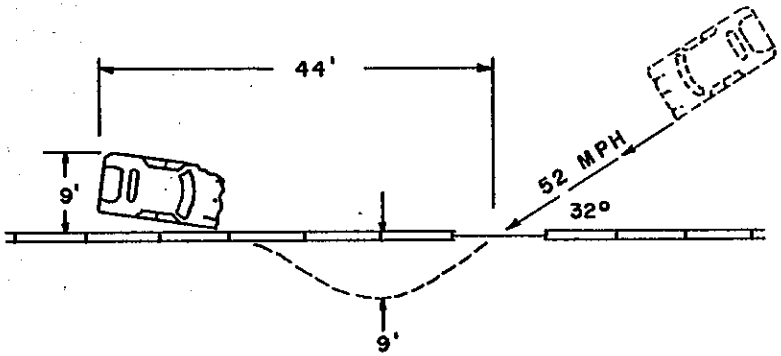

GUARDRAIL ..... 36" Chain Link Fence w/ 3/4" cables 9" & 30" above pvmt. Impact point at center of emergency crossover.

POST ..... 2 1/4"-4.1 #

H Section Fence Post

POST SPACING ..... 8' O.C.

LENGTH OF INSTALLATION ... 400'

GROUND CONDITION ..... Dry

DUMMY INJURY ..... Severe Chest & Internal Injuries

GUARDRAIL DAMAGE ..... 24' of Fence knocked out.
10' of Cable damaged.

POST DAMAGE ..... 4 Posts damaged beyond repair.
2 Posts Bent.

VEHICLE DAMAGE ..... Total Loss

MAX. DYNAMIC DEFLECTION OF RAIL .. 9'

VEHICLE DECELERATION (PEAK) .... Long. 53 G ... Transv. 34 G

DUMMY DECELERATION (PEAK).... Long. NG ... Transv. 6 G

TEST NO. 20

DATE 3-10-59

VEHICLE ..... Chev. 54 Sedan

SPEED ..... 52 MPH

IMPACT ANGLE .... 32°

VEHICLE WEIGHT ... 3700
(W/DUMMY & INSTRUMENTATION)

STATE OF CALIFORNIA DIVISION OF HIGHWAYS MATERIALS & RESEARCH DEPT.

EXHIBIT 17

ClibPDF - www.fastio.com

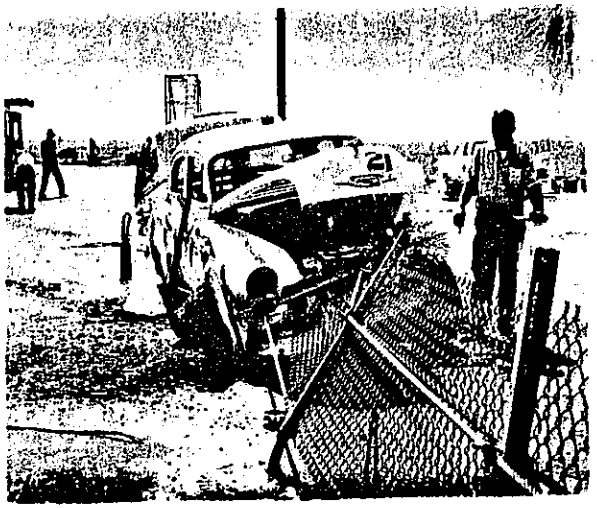

POST IMPACT

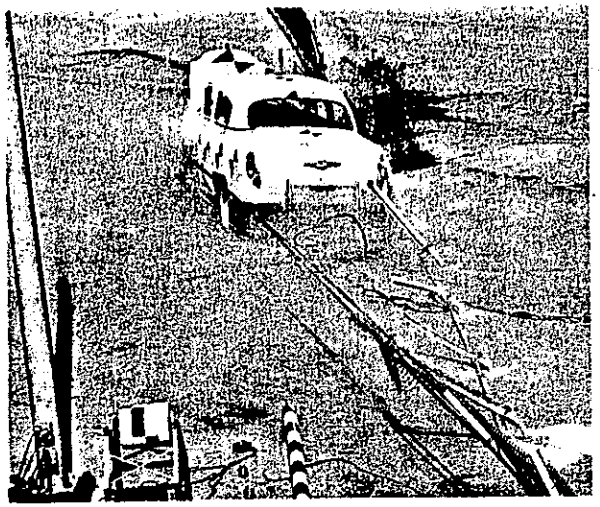

IMPACT + 750 M SEC.

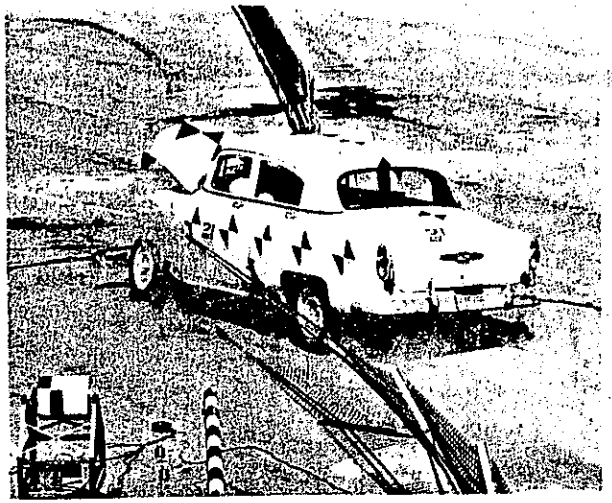

IMPACT + 225 M SEC.

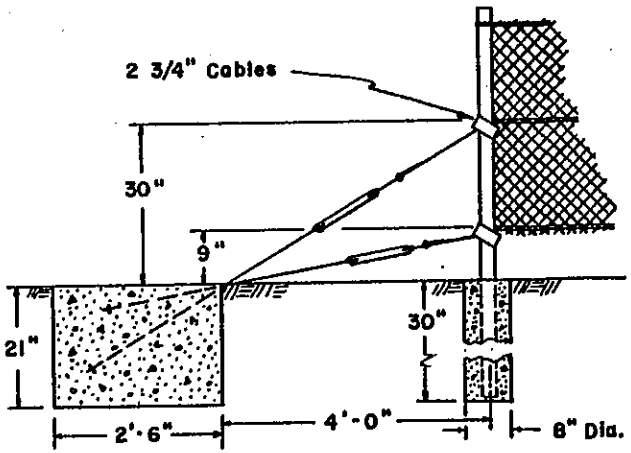

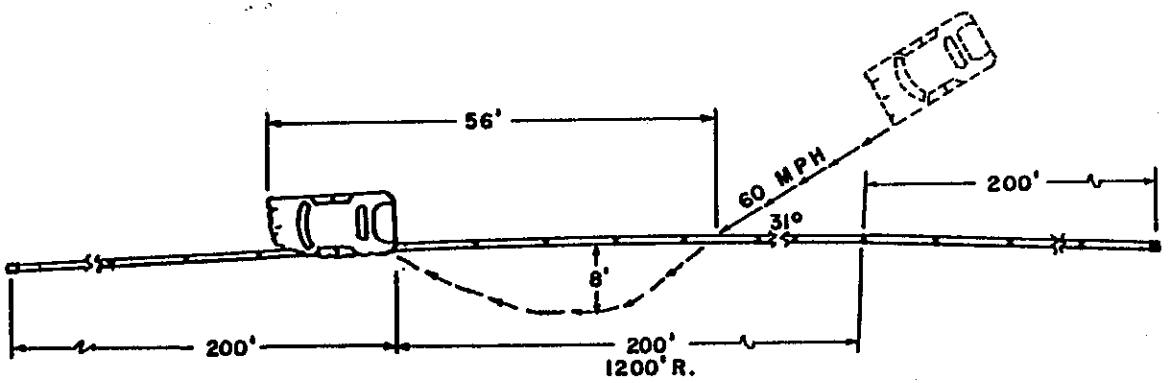

GUARDRAIL ..... 36" Chain Link Fence w/2 3/4" cables 9" & 30" above pvmt.

POST ..... 2 1/4" - 4.1 # H Section Fence Post.

POST SPACING ..... 8' O.C.

LENGTH OF INSTALLATION... 600'

GROUND CONDITION ..... Wet

DUMMY INJURY ..... Scalp laceration, possible chest injuries.

GUARDRAIL DAMAGE ..... 56' of fence knocked out. No damage to cables.

POST DAMAGE ..... 12 posts damaged beyond repair.

VEHICLE DAMAGE ..... Total loss.

MAX. DYNAMIC DEFLECTION OF RAIL ... 8'

VEHICLE DECELERATION (PEAK) ... Long. NG ...Transv. NG

DUMMY DECELERATION (PEAK) ..... Long. 6G ...Transv. 4G

TEST NO. 21

DATE 3-20-59

VEHICLE ..... Chev. 53 Sedan

SPEED ..... 60 MPH

IMPACT ANGLE ... 31°

VEHICLE WEIGHT... 3850 (W/DUMMY & INSTRUMENTATION)

EXHIBIT

... DIVISION OF HIGHWAYS MATERIALS & RESEARCH DEPT.

ClibPDF - www.fastio.com

POST IMPACT

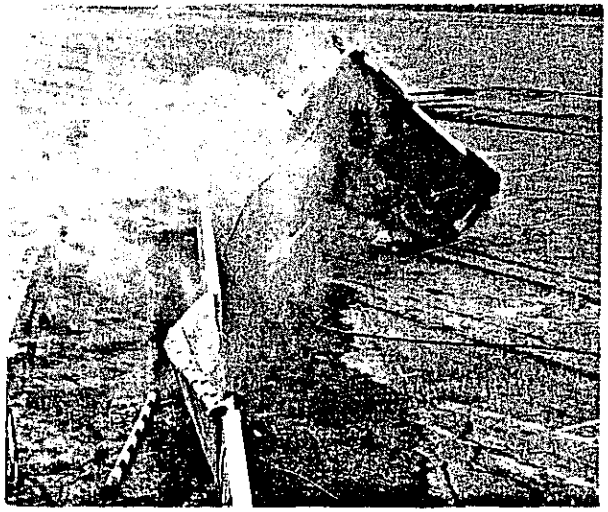

IMPACT + 750 M SEC.

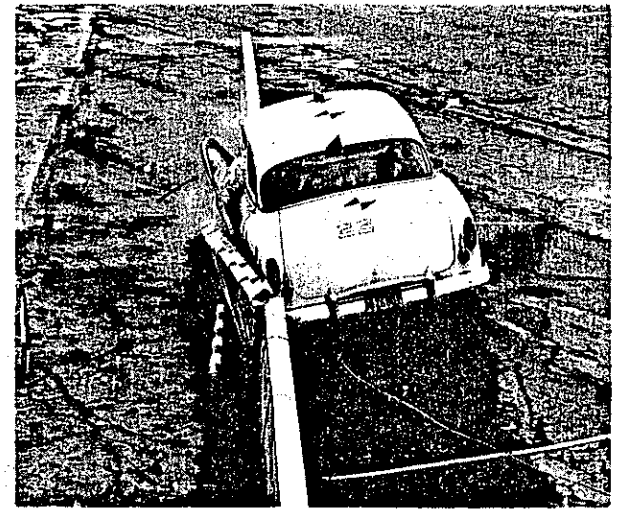

IMPACT + 150 M SEC.

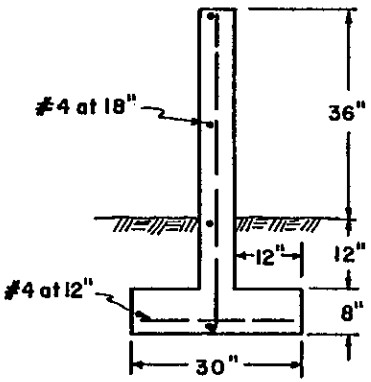

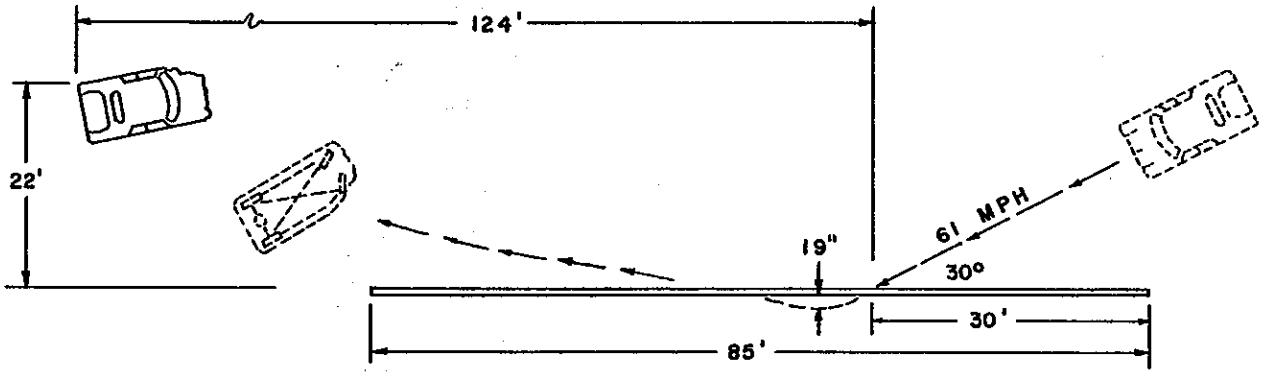

GUARDRAIL ..... 36" Conc. Wall, 6" Thick.
REINFORCING BAR SPACING .. #4 at 12" Vert. #4 at 18" Horiz.
LENGTH OF INSTALLATION ... 85'
GROUND CONDITION ..... Wet

DUMMY INJURY ..... Concussion, severe shoulder & chest injuries.
GUARDRAIL DAMAGE ..... 20' Wall broken
VEHICLE DAMAGE ..... Total loss
MAX. DYNAMIC DEFLECTION OF RAIL .. 22"
VEHICLE DECELERATION (PEAK) ..... Long. 112G ... Transv. 72G
DUMMY DECELERATION (PEAK) ..... Long. 21G ... Transv. 25G

TEST NO. 22
DATE 3-30-59
VEHICLE ..... Chev. 53 Sedan
SPEED ..... 61 MPH
IMPACT ANGLE ... 30°
VEHICLE WEIGHT ... 3850
(W/DUMMY & INSTRUMENTATION)

STATE OF CALIFORNIA DIVISION OF HIGHWAYS MATERIALS & RESEARCH DEPT.

EXHIBIT 19

ClibPDF - www.fastio.com

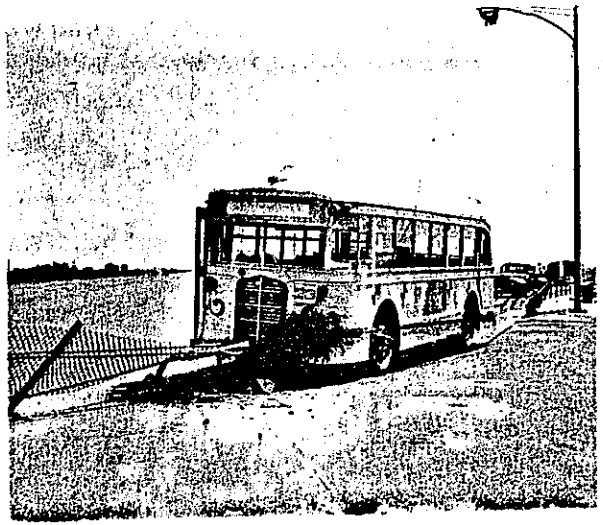

POST IMPACT

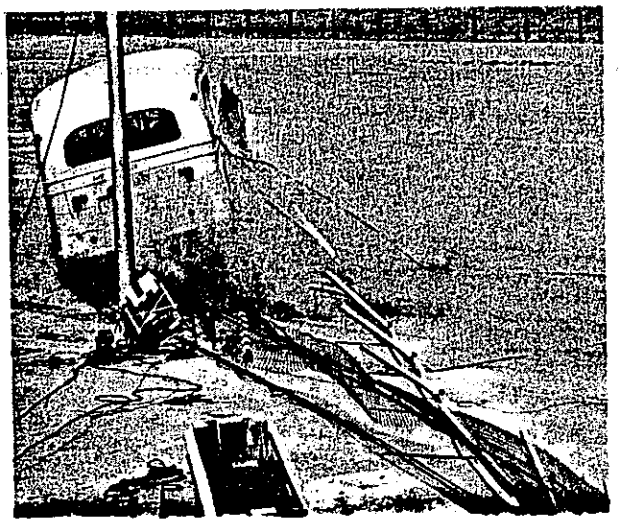

IMPACT + 900 M SEC.

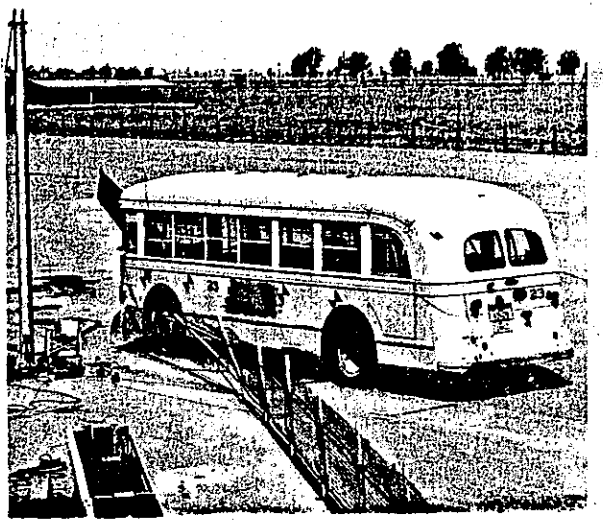

IMPACT + 100 M SEC.

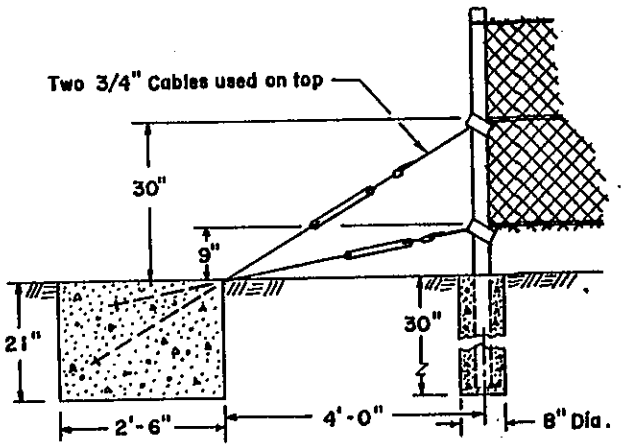

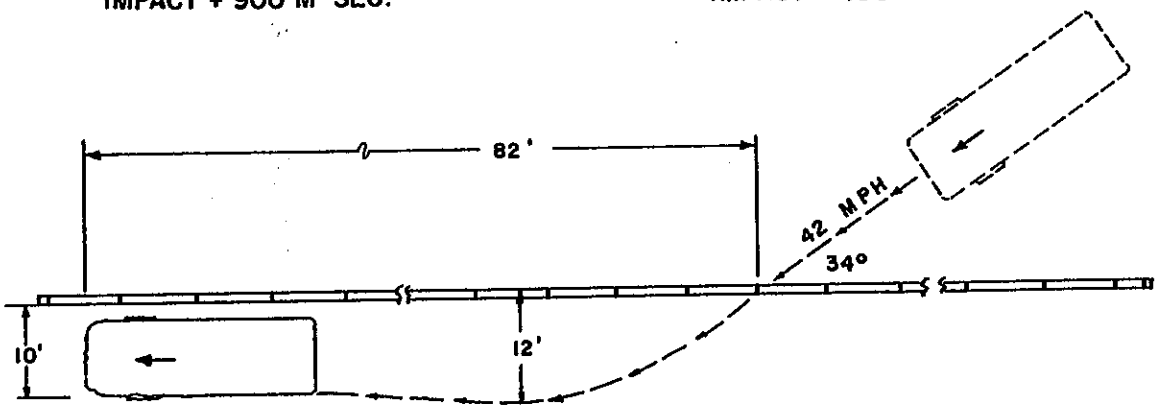

GUARDRAIL .....36" Chain Link fence w/ 3/4" cables 9" & 30" above pvmt.

POST .....2 1/4"-4.1#
H Section Fence Post.

POST SPACING ..... 8' O.C.

LENGTH OF INSTALLATION... 304'

GROUND CONDITION .....Dry

DUMMY INJURY ..... Left shoulder injuries.

GUARDRAIL DAMAGE ..... 90' of fence knocked out. No damage to cables.

POST DAMAGE ..... 23 Posts damaged beyond repair.

VEHICLE DAMAGE ..... $ 1200

MAX. DYNAMIC DEFLECTION OF RAIL . . . 12'

DUMMY DECELERATION (PEAK) .... Long. 2.8G .. Transv. 9.3 G

TEST NO. 23

DATE 4-21-59

VEHICLE ..... 1937-40 pass. Bus

SPEED ..... 42 MPH

IMPACT ANGLE ..... 34°

VEHICLE WEIGHT ...17,500
(W/DUMMY & INSTRUMENTATION)

EXHIBIT

ClibPDF - www.fastio.com

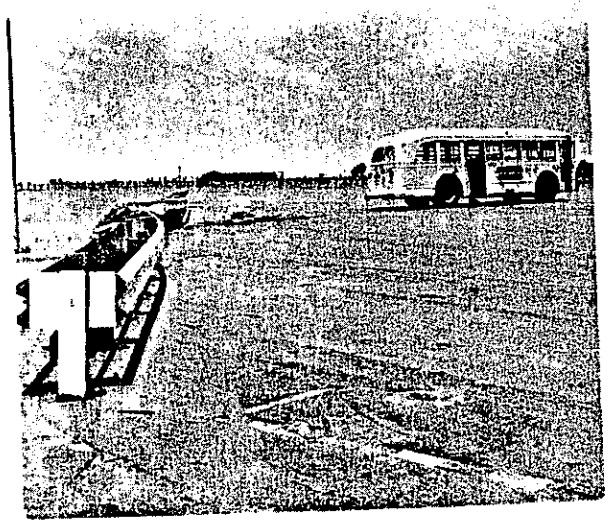

POST IMPACT

IMPACT + 800 M SEC.

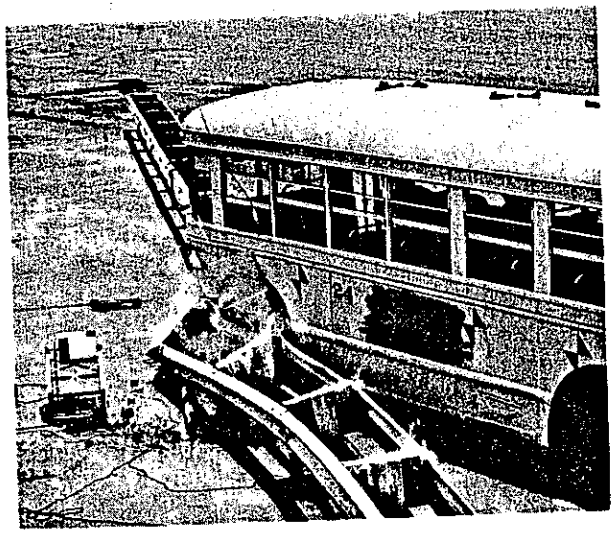

IMPACT + 150 M SEC.

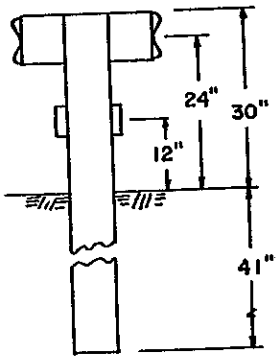

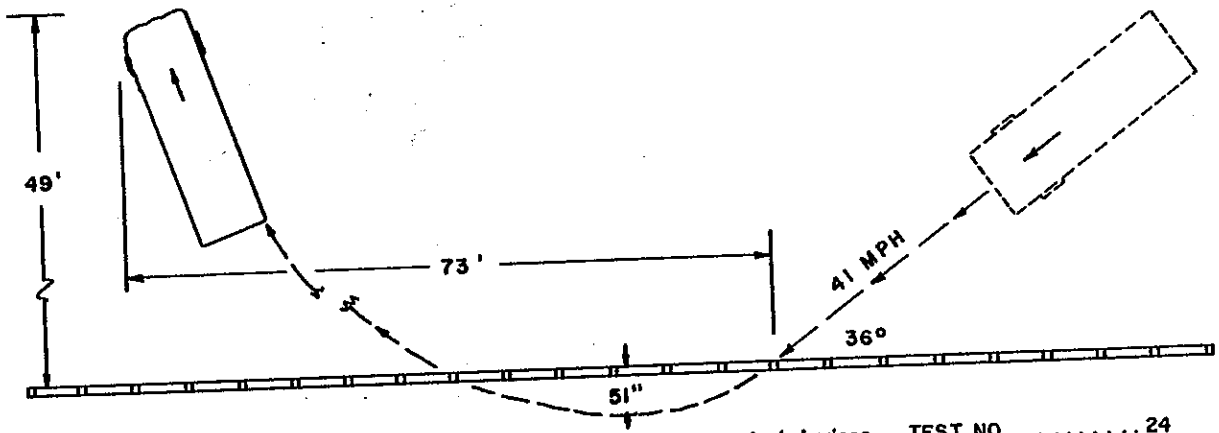

GUARDRAIL	W Section
CHANNEL	6" ⊓ 8.2 #
BRACKET	8x8x12 D.F. Block
POST	8 x 8 D.F.
POST SPACING	6'-3" O.C.
LENGTH OF INSTALLATION	125'
GROUND CONDITION	Dry

DUMMY INJURY	Critical head, neck & shoulder injuries; severe body bruises.
GUARDRAIL DAMAGE	7 Sections damaged beyond repair.
CHANNEL DAMAGE	4 Damaged beyond repair.
POST DAMAGE	5 Damaged beyond repair.
VEHICLE DAMAGE	$ 1,500
MAX. DYNAMIC DEFLECTION OF RAIL	58"
DUMMY DECELERATION (PEAK)	Long. 6G ... Transv. 25 G

TEST NO.	24
DATE	4-30-59
VEHICLE	1937-40 pass. Bus.
SPEED	41 MPH
IMPACT ANGLE	36°
VEHICLE WEIGHT (W/DUMMY & INSTRUMENTATION)	17,500

STATE OF CALIFORNIA DIVISION OF HIGHWAYS MATERIALS & RESEARCH DEPT.

EXHIBIT 21

ClibPDF - www.fastio.com

ClibPDF - www.fastio.com

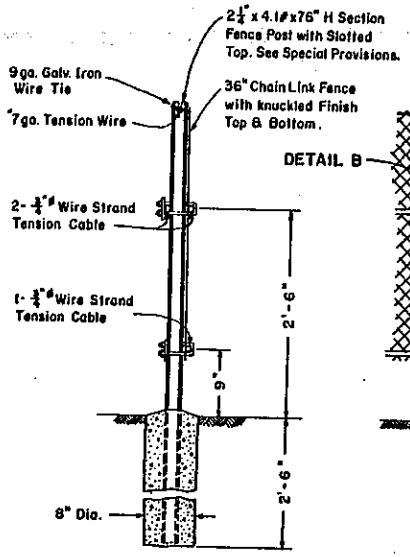

END VIEW

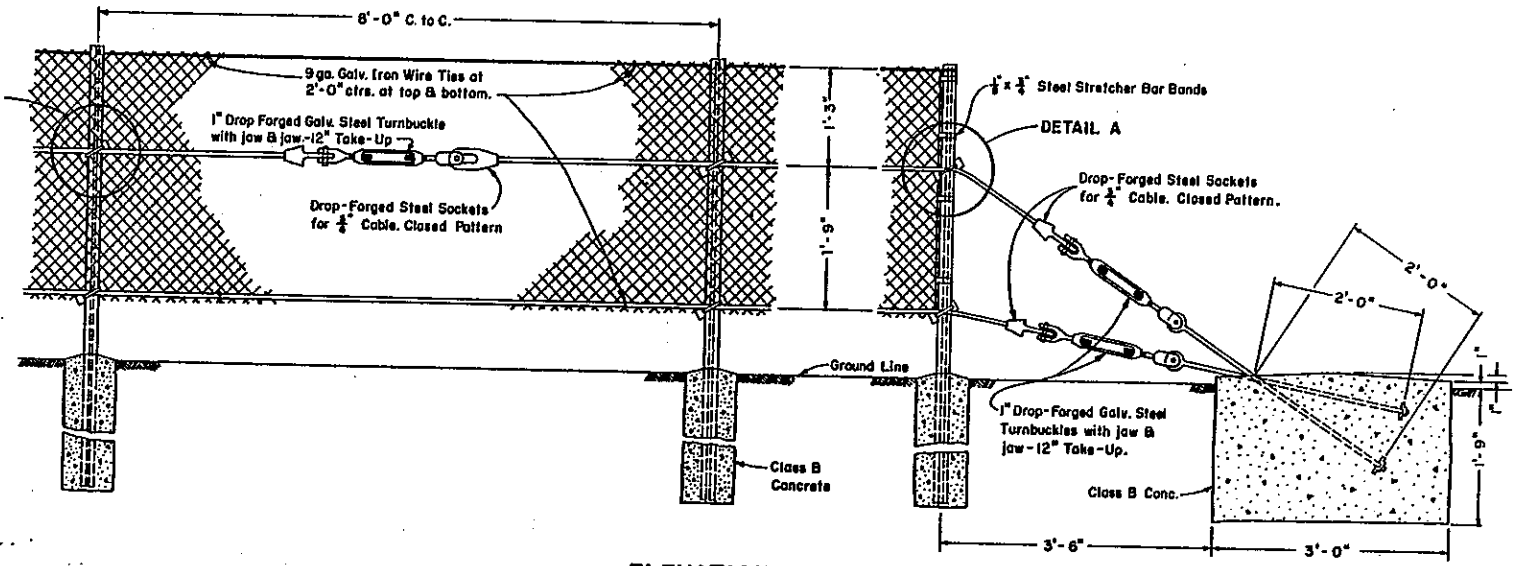

ELEVATION

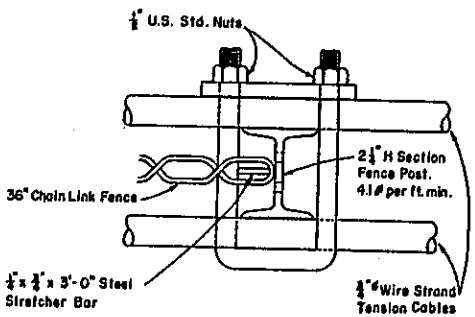

DETAIL A
END POST ASSEMBLY

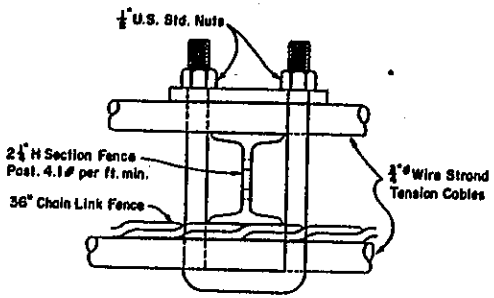

DETAIL B
LINE POST ASSEMBLY

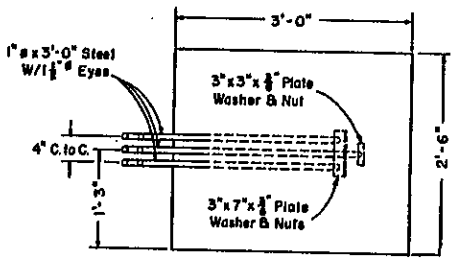

ANCHOR BLOCK PLAN

CABLE-CHAIN LINK BARRIER

STATE OF CALIFORNIA DIVISION OF HIGHWAYS MATERIALS & RESEARCH DEPT.

EXHIBIT

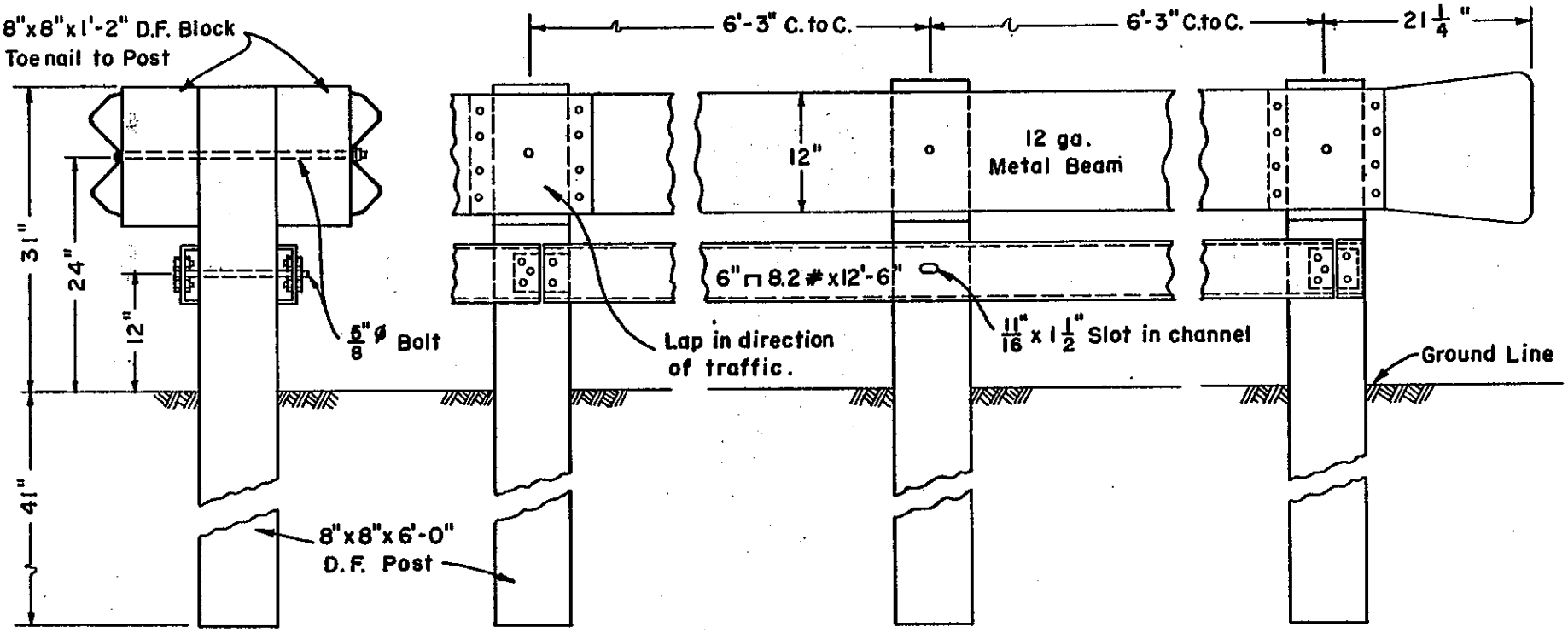

BLOCKED OUT METAL BEAM BARRIER

STATE OF CALIFORNIA DIVISION OF HIGHWAYS MATERIALS & RESEARCH DEPT.

EXHIBIT 23

ClibPDF - www.fastio.com

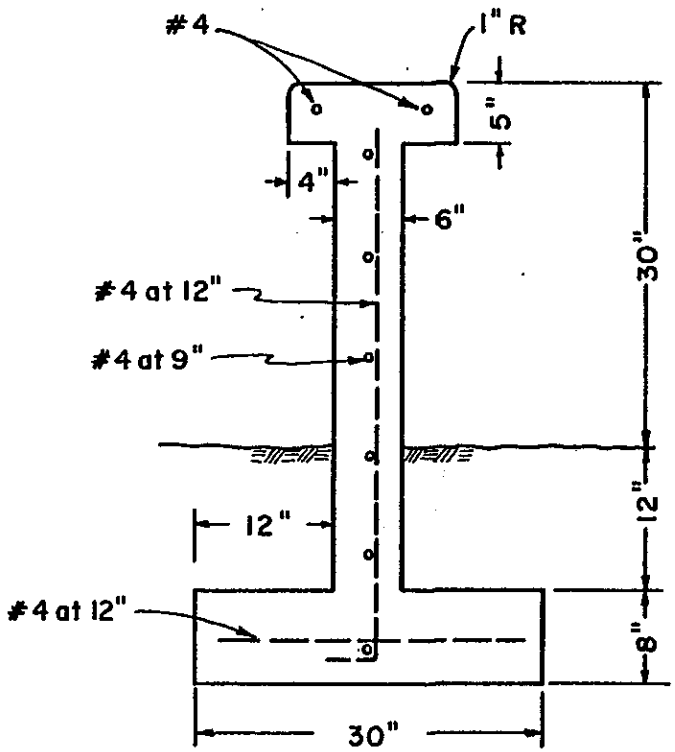

DESIGN A

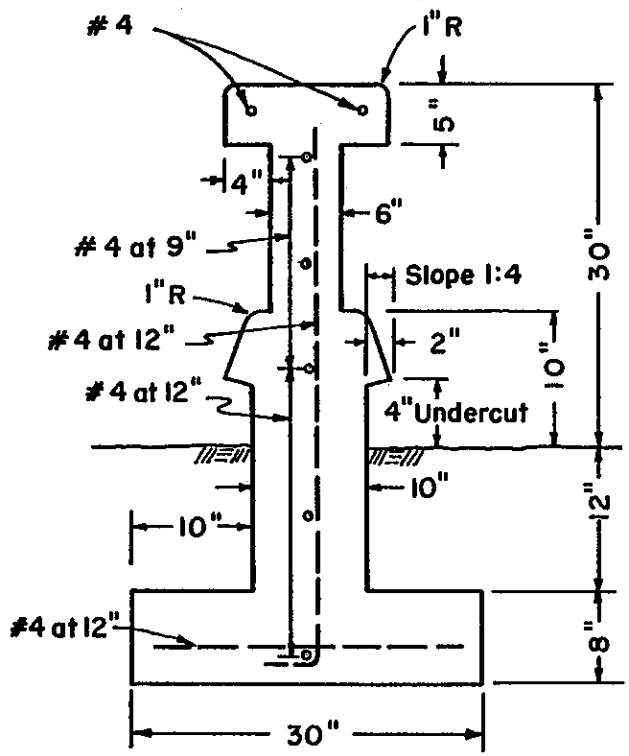

DESIGN B

CONCRETE WALL BARRIER

STATE OF CALIFORNIA DIVISION OF HIGHWAYS MATERIALS & RESEARCH DEPT.

EXHIBIT 24

ClibPDF - www.fastio.com

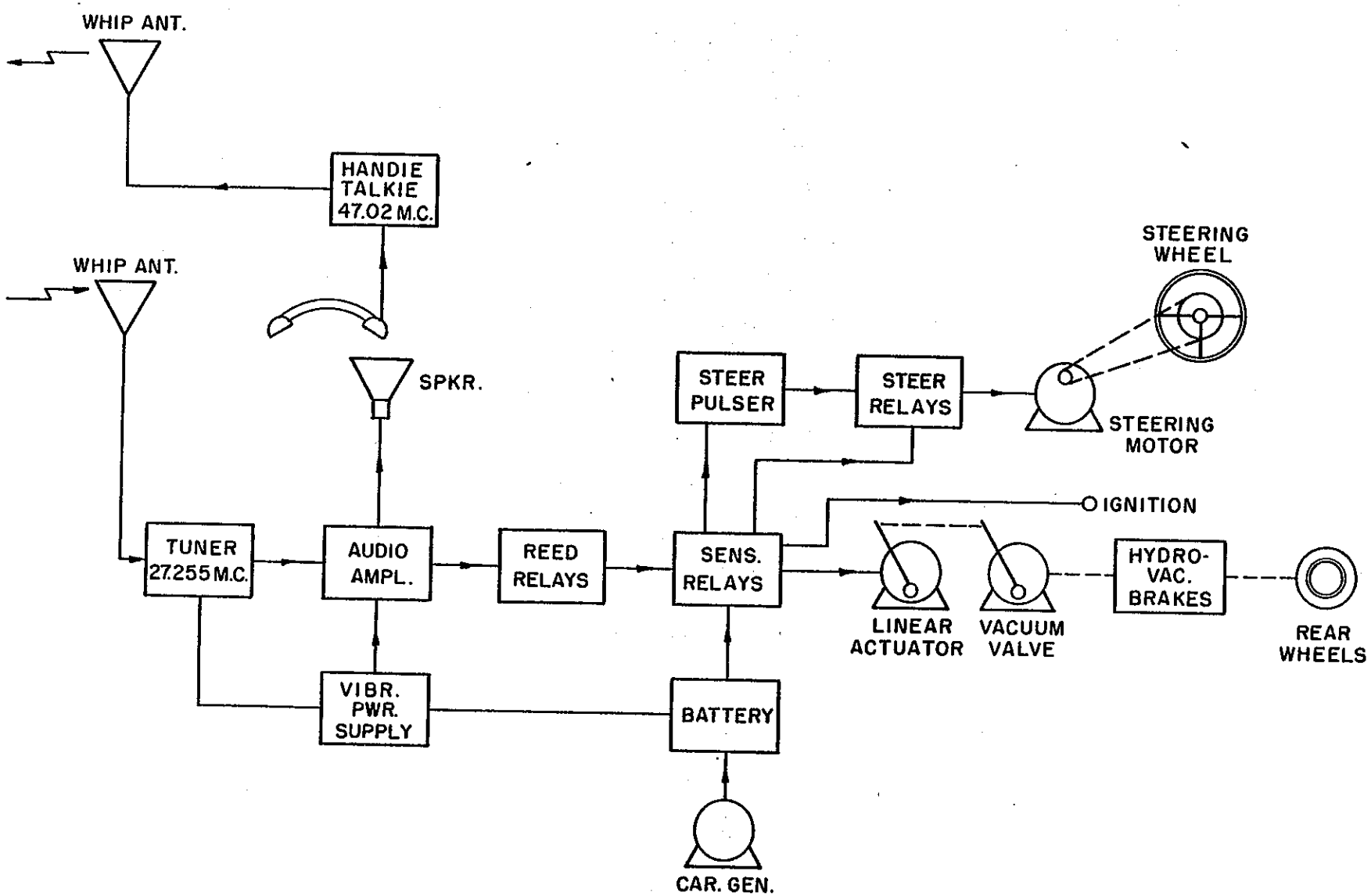

REMOTE RADIO CONTROL CRASH CAR BLOCK DIAGRAM

STATE OF CALIFORNIA DIVISION OF HIGHWAYS MATERIALS & RESEARCH DEPT.

EXHIBIT 25

ClibPDF - www.fastio.com

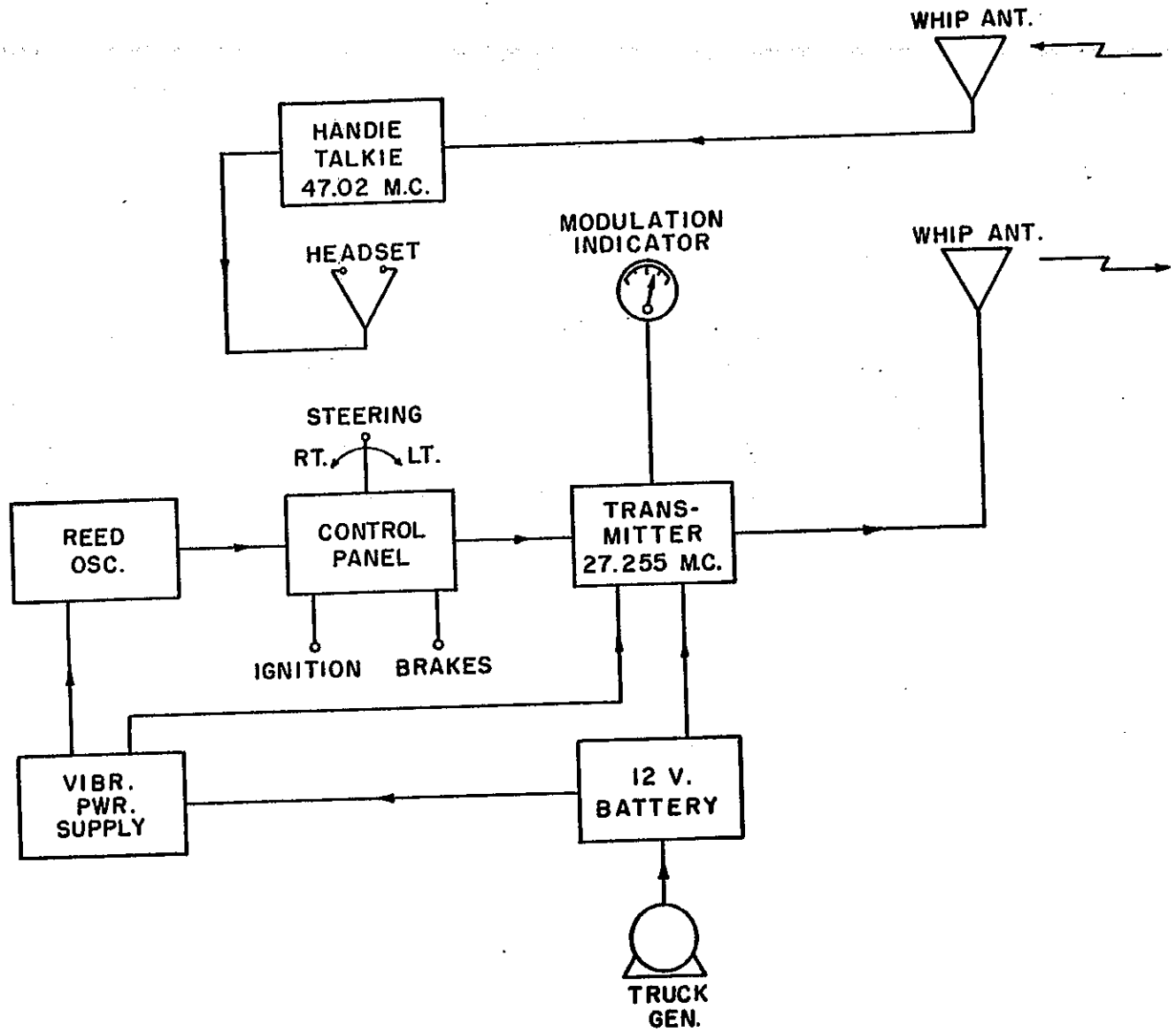

REMOTE CONTROL TRUCK BLOCK DIAGRAM

STATE OF CALIFORNIA DIVISION OF HIGHWAYS MATERIALS & RESEARCH DEPT.

EXHIBIT 26

ClibPDF - www.fastio.com

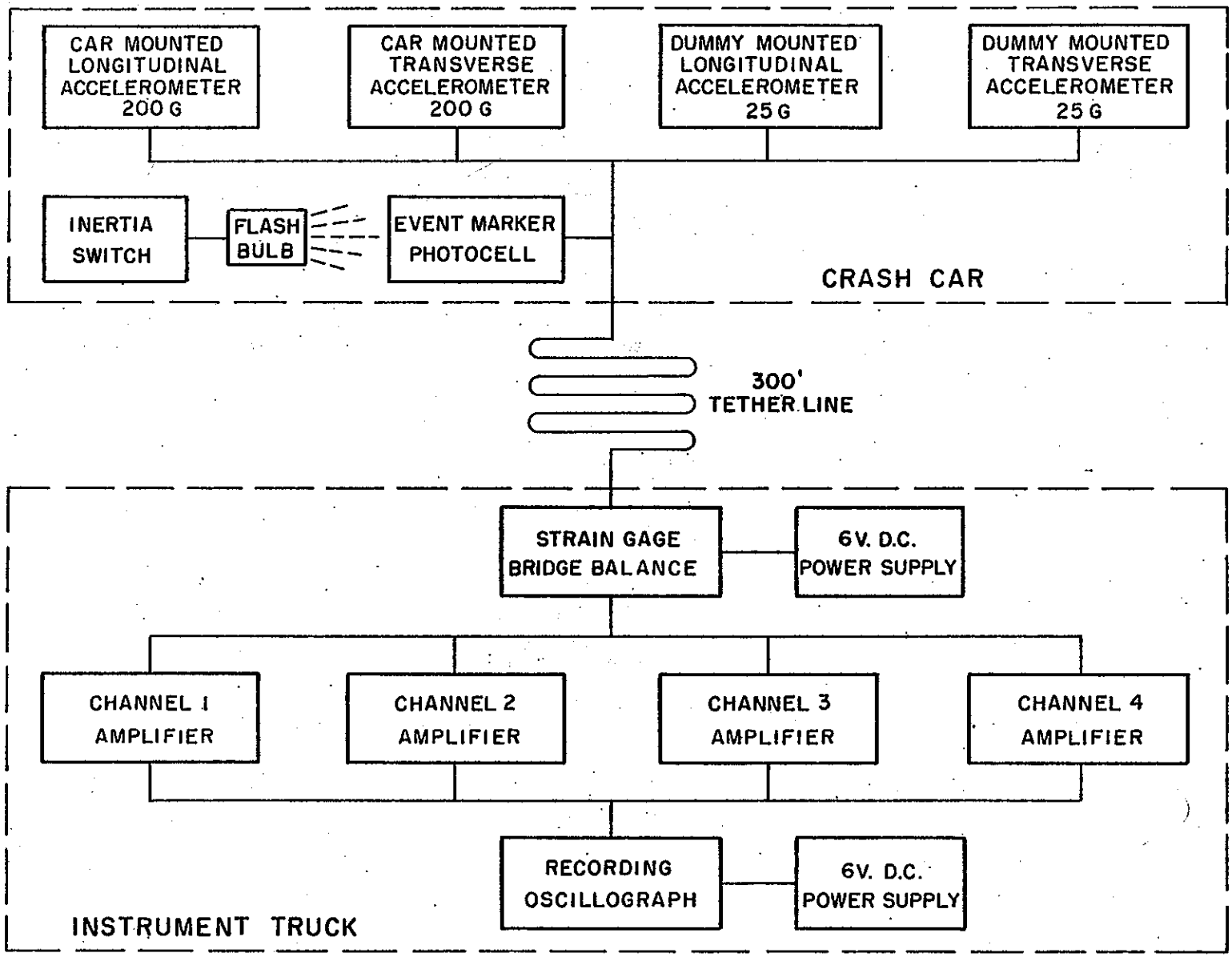

DECELERATION INSTRUMENTATION

STATE OF CALIFORNIA DIVISION OF HIGHWAYS MATERIALS & RESEARCH DEPT.

EXHIBIT 27

ClibPDF - www.fastio.com

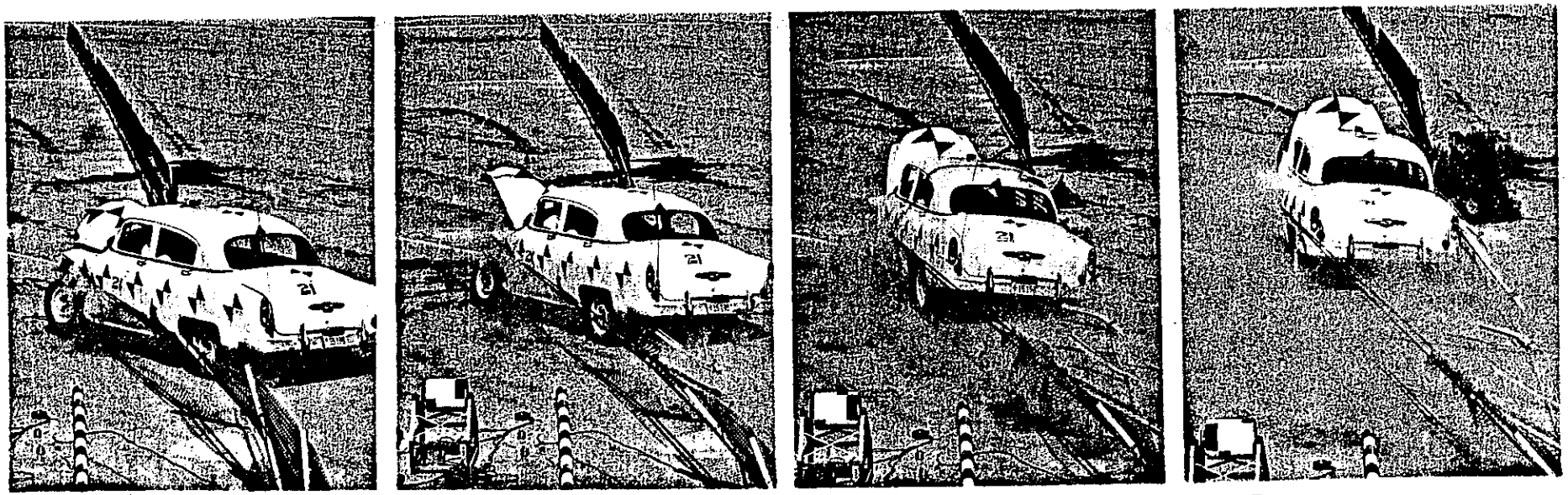

IMPACT + 175 M Sec. IMPACT + 275 M Sec. IMPACT + 425 M Sec. IMPACT + 675 M Sec.

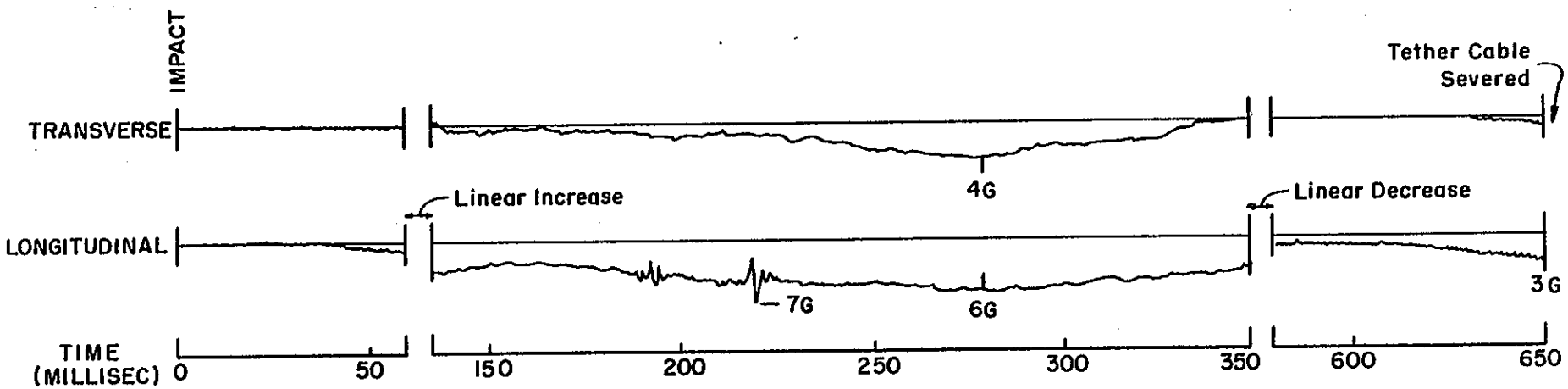

DUMMY DECELERATION PATTERN
TEST NO. 21 CABLE - CHAIN LINK BARRIER

STATE OF CALIFORNIA DIVISION OF HIGHWAYS MATERIALS & RESEARCH DEPT.

EXHIBIT 28

ClibPDF - www.fastio.com

IMPACT + 200 M Sec.

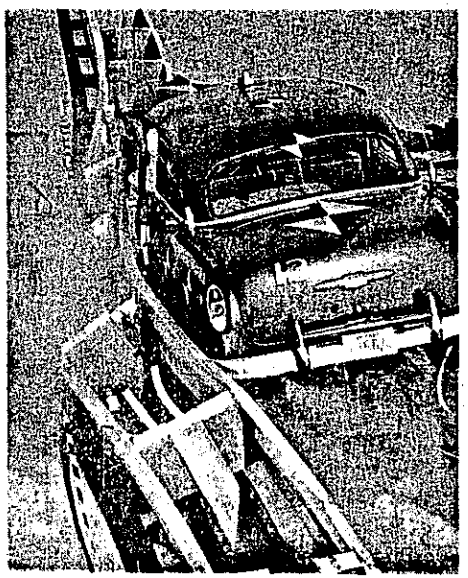

IMPACT + 250 M Sec.

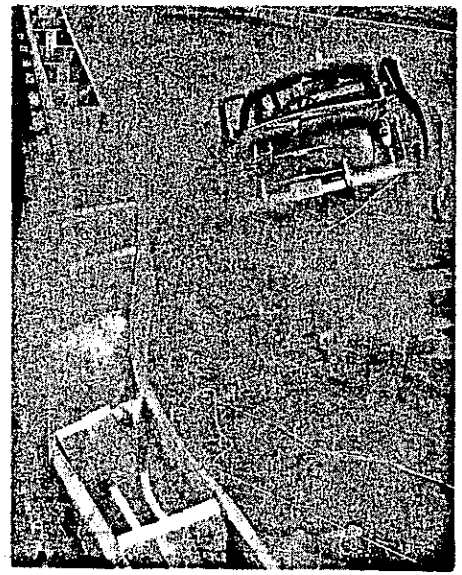

IMPACT + 800 M Sec.

IMPACT + 3050 M Sec.

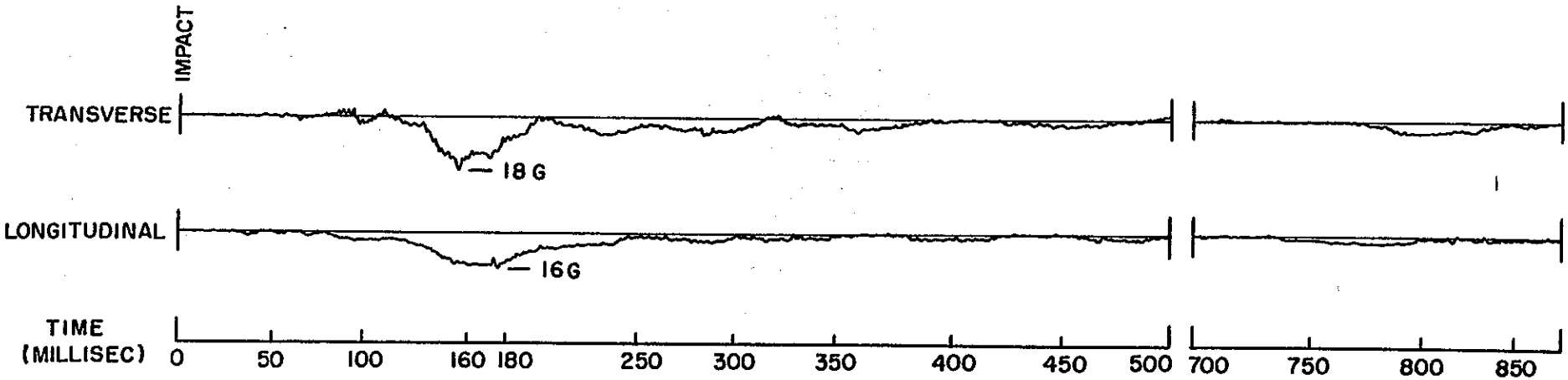

DUMMY DECELERATION PATTERN
TEST NO. 13 BLOCKED-OUT METAL BEAM BARRIER

STATE OF CALIFORNIA DIVISION OF HIGHWAYS MATERIALS & RESEARCH DEPT.

EXHIBIT 29

ClibPDF - www.fastio.com

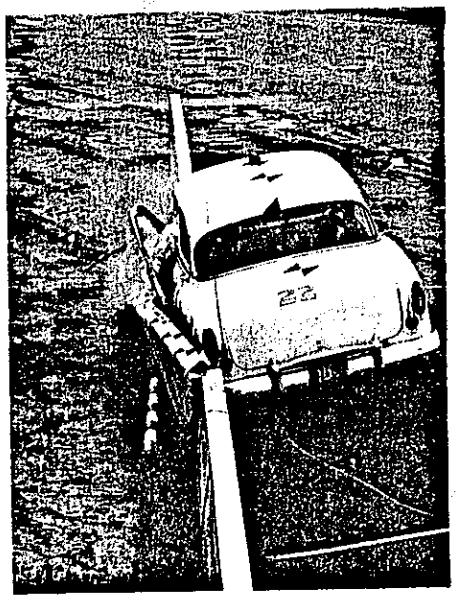

IMPACT + 150 M Sec.

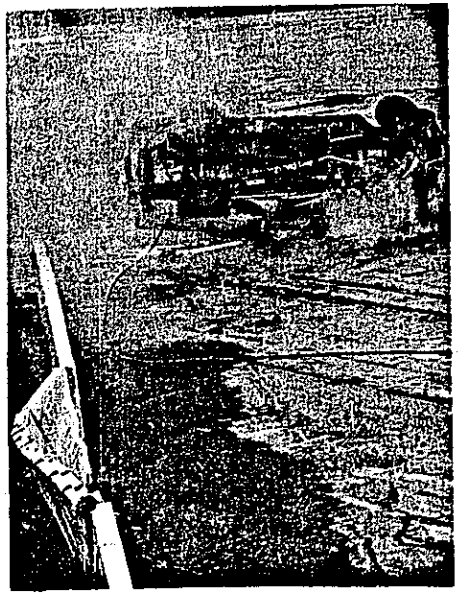

IMPACT + 1100 M Sec.

IMPACT + 1350 M Sec.

IMPACT + 2700 M Sec.

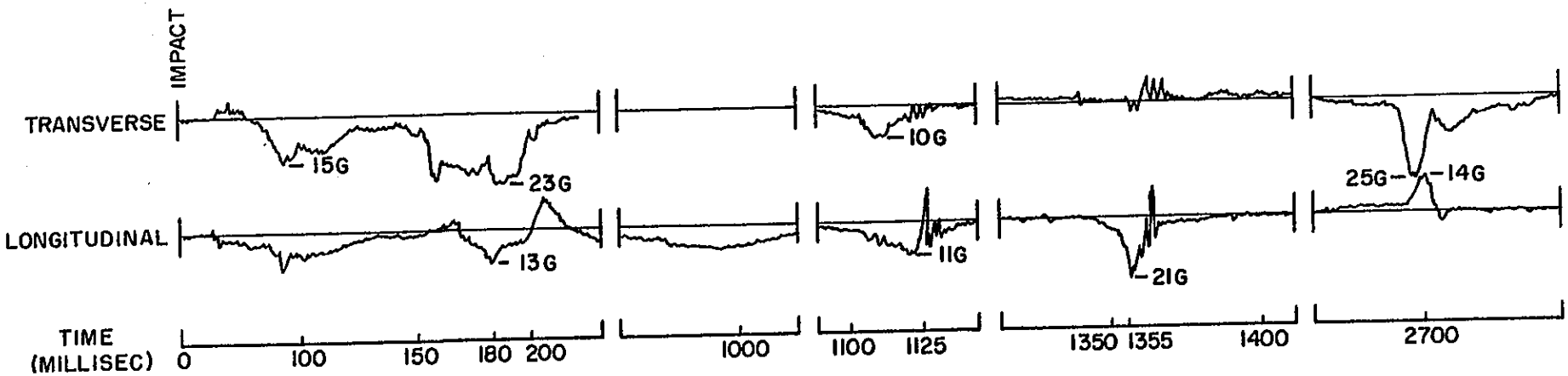

DUMMY DECELERATION PATTERN
TEST NO. 22 CONCRETE WALL BARRIER

STATE OF CALIFORNIA DIVISION OF HIGHWAYS MATERIALS & RESEARCH DEPT.

EXHIBIT 30

ClibPDF - www.fastio.com

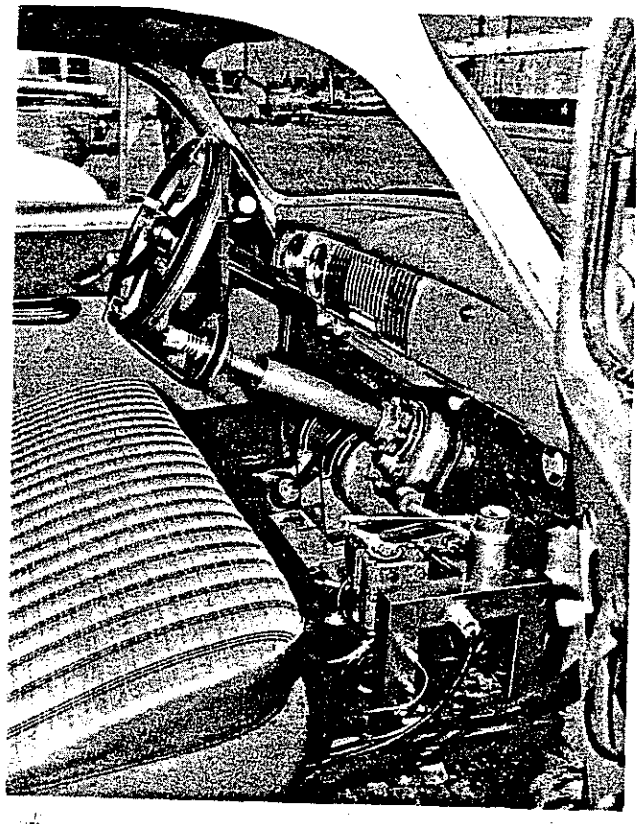

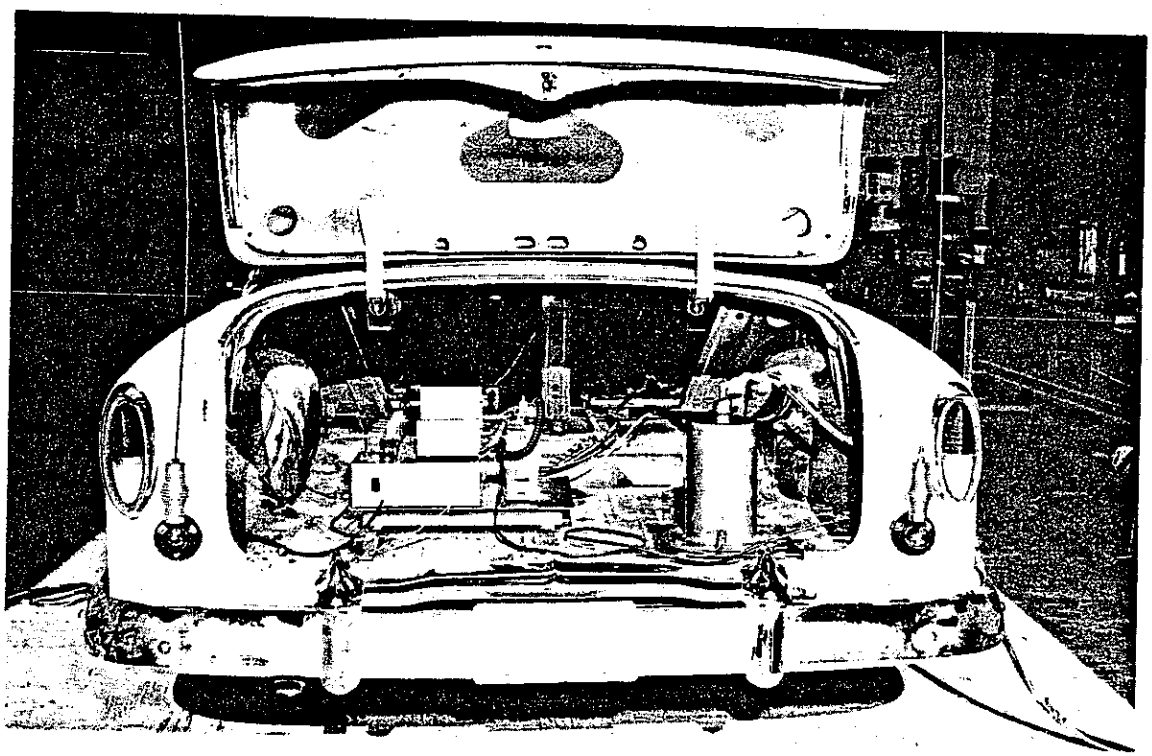

CRASH CAR RADIO CONTROL EQUIPMENT

ClibPDF - www.fastio.com

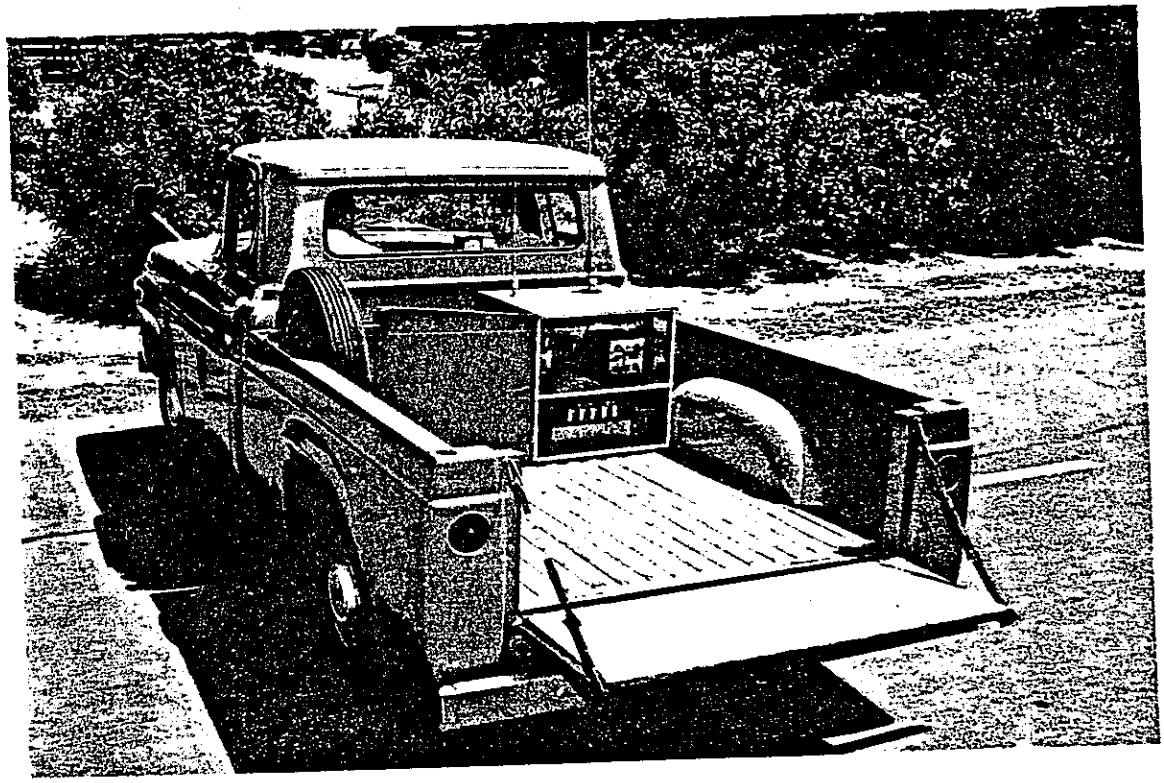

CONTROL TRUCK RADIO TRANSMITTING EQUIPMENT

ClibPDF - www.fastio.com