3303
Beck

STATE OF CALIFORNIA
DEPARTMENT OF PUBLIC WORKS
DIVISION OF HIGHWAYS

INSPECTION TECHNIQUES FOR THE CONTROL OF WELDING OF HIGHWAY BRIDGES

By

John L. Beaton
Supervising Highway Engineer

Presented at the Portland Convention of
the American Society of Civil Engineers
June 23-27, 1958

58-08

MATERIALS & RESEARCH DEPARTMENT
SAGACITAS · SCIENTIA · STVDIVM

58-08

ClibPDF - www.fastio.com

INSPECTION TECHNIQUES

FOR THE

CONTROL OF WELDING OF HIGHWAY BRIDGES

By

John L. Beaton *

SYNOPSIS

This paper discusses the inspection techniques developed by the California Division of Highways for the control of the fabrication of welded highway bridges. Included is the management of such inspection as well as the step-by-step procedure followed. The use of radiography and other forms of nondestructive testing is outlined with special emphasis on the standards used to interpret the radiographic film.

INTRODUCTION

During the past ten years the California Division of Highways has constructed 250 bridges containing about 120,000 tons of welded structural steel, and during the present fiscal year will have had about 60 bridges under various stages of contract which will require about 50,000 additional tons of welded structural steel. These bridges have been designed and the construction supervised by the Bridge Department of the California Division of Highways with the fabrication inspection of such structures being performed by personnel of the Materials and Research Department.

* Supervising Highway Engineer, California Division of Highways.
Presented at the Portland Convention of the American Society of Civil Engineers June 23-27, 1958.

ClibPDF - www.fastio.com

With the possible exception of two steps, the fabrication inspection procedure followed by the California Division of Highways in controlling welded fabrication is approximately the same as that in general use throughout the United States. The two steps which may represent differences from some agencies are (1) a prefabrication conference and (2) the procedure used for radiographic inspection. The California fabrication inspection procedure for welded steel bridges can be divided into five important steps:

1. Prefabrication conference at which the methods and procedures to be followed by the fabricator and by the inspector during fabrication are discussed informally. The important details and requirements of the plans and specifications are thoroughly reviewed at this time, and any differences of opinion are resolved in advance of the actual start of fabrication. This discussion is scheduled at the fabricator's convenience, usually just before the shop drawings are submitted for approval.
2. Prequalification of manual weldors, automatic welding machine operators, and welding procedures. The first use of radiography is made during this period in that each butt welded qualification plate is radiographed before the mechanical tests are conducted. This not only indicates to the shop personnel what is meant by "radiographic quality" but also eliminates useless machining and testing of defective plates.

ClibPDF - www.fastio.com

3. Identification of the steel to mill test reports by the inspector. Mill test reports are witnessed and verified by a representative of the State at the mill. After the steel arrives from the mill, emphasis is placed on a means of positive identification of special steels as they are cut for use throughout fabrication. This is getting to be of prime importance as our designers are now making more and more use of the economical combination of high strength steels with the usual carbon structural steel.

4. Continuous visual inspection supplemented by nondestructive testing as necessary during actual fabrication. Penetrant dye, hardness testing, and radiography are the principal types of nondestructive tests used during actual fabrication. Approximately 80 percent (this may be increased or decreased depending on job experience) of all butt welds to be used in primary tension are radiographed, and a spot radiographic check of all such welds to be stressed in compression is also performed. Radiography is not used on fillet welds. After qualification tests or prequalification, butt welding is controlled by visual inspection supplemented by radiography following the standards shown on Figure 1 in the Appendix; whereas, fillet welding is controlled by visual inspection supplemented by use of penetrant dye to disclose possible cracking. Grinding or

ClibPDF - www.fastio.com

gouging may also be necessary in conjunction with penetrant dye so as to reveal subsurface cracking.

5. A final inspection is made following the blast cleaning of the steel. This is primarily to check the efficacy of the cleaning operation and, in addition, to observe certain superficial defects, such as undercut, that possibly could have been hidden before the blasting operation.

WELDING INSPECTION MANAGEMENT

California has two large industrial centers; the Los Angeles and San Francisco Bay areas. The Materials and Research Department of the Division of Highways supervises an inspection office in each of these areas. It is the duty of these offices to inspect the manufacture of all products destined for highway projects -- this includes welded highway structures.

In addition to the normal activities of supervision and coordination, the following items specifically needed by the inspector during the inspection of welding are the responsibility of the Sacramento Headquarters office. These are: (1) to provide design and shop plans and special specifications for each structure, (2) arrange for mill inspection of steel, (3) provide radiographic inspection either by arranging for the services of a local commercial laboratory or furnishing such service through a State-owned mobile radiographic unit from Sacramento, (4) provide machine shop and physical, chemical, and metallurgical laboratory testing services, (5) provide work standards and inspection standards, (6) develop and provide new tests and

ClibPDF - www.fastio.com

standards not otherwise covered in published form, and (7) provide welding training and consultation and advice for the more difficult problems. This requires the services of a welding engineer.

The documents furnished to the inspector are the American Welding Society Specifications for Welded Highway and Railroad Bridges (Reference 1), the American Welding Society Inspection Manual (Reference 2), and Test Method No. Calif. 601 (Reference 3). The latter test method has been prepared to cover conditions too new to be included in the A.W.S. publications and those unique to California fabrication and erection. The items of significant difference from usual practice have been included in the Appendix and described below.

In addition to the above, a set of A.S.T.M. Designation E99 Reference Radiographs are made available to each inspector for training and comparison purposes.

Figure 2 in the Appendix shows a departure from Appendix B of the A.W.S. Specification D2.0-56 (Reference 1). The additional specimens are required as it is considered desirable to test the structural properties of automatic welding as well as the quality of the weld deposit.

Figures 3a and 3b show a departure from the welding operator qualification tests for groove welds shown by Appendix D, Part III, of A.W.S. D2.0-56. These modifications are considered necessary as most of the use of automatic and semi-automatic welding of groove welds in California structures are of the double vee butt joint type.

Figure 4 shows a departure from the welding operator test for fillet welds shown in Appendix D, Part III, of A.W.S. D2.0-56.

ClibPDF - www.fastio.com

This modification is used as being more representative of California's typical application of automatic welding of webs to flanges in bridge girders.

Figure 5 shows a proposed departure from Appendix D, Part I, of A.W.S. D2.0-56 for use in the qualification of automatic and semi-automatic procedures. This test has not yet been entered into the California specification but has been used on a trial basis for about one year. So far it appears to be a practical and comprehensive test as it provides a measure of the ductility of the fillet as well as the quality. California specifications require a Brinell hardness of the heat-affected zone not to exceed 175. The sectioned test specimen of Figure 4 is excellent for this determination as the working procedure to enforce this limit requires that an average of five or more points be used with the average not exceeding 175 with a tolerance for any one point of +5.

Figure 6 is inspection standards developed by our welding engineer to control the welding of stud shear keys to the tops of steel girders for use in composite construction.

Figure 7 shows a check list used by our inspection staff as a reminder during the actual inspection process. This list is not carried into the shop as a "check off" list, but rather is used in the office as a reminder.

WELDING INSPECTION PROCEDURE

The technique used during the inspection of the fabrication of California highway bridges can best be illustrated by outlining the procedural details followed in chronological order. Before starting such a discussion, it should be pointed out that the

ClibPDF - www.fastio.com

economy of fabrication of a welded bridge is primarily influenced by the designer. In addition to the normal considerations of design, the designer of a welded structure must consider properly balanced geometry, combinations of steel compatible to welding, space considerations and positions for both welding machines and weldors (e.g., tip sizes of electrodes so as to be sure the electrode can be entered into the joint), possible stresses and distortions due to expansion and shrinkage during fabrication as well as possible stresses and distortions during erection. In preparing specifications for welded work, it is of special importance that the engineer brings out points of consideration over and above those that are encountered in the usual fabrication of structural steel. These might include the use of preheat, special restrictions concerning the straightening or preparation of materials or members made of special steels, special electrodes or special equipment required (such as constant potential controllers on welding machines).

The best place for the inspector to initiate fabrication inspection of a welded structure is while it is still on paper on the shop drawings of the fabricator. This is usually accomplished by the fabricator requesting a conference between his staff and the inspector during which time the methods and procedures to be followed by the shop are outlined and the requirements and procedures of inspection are also discussed so that all points of conflict are ironed out in advance. Occasionally the fabricator might indicate that problems of design or erection may be brought up at this meeting, in which case the inspector requests both design and construction engineers to be present. Such a system

ClibPDF - www.fastio.com

can only work in those areas where the constructing agency maintains a continuous competent inspection staff. Such conferences give the inspector an opportunity to adjust his procedure to fit into the methods and schedule to be followed by the shop. The inspector's responsibility, during such a conference, to the fabricator is to point out any adverse experience that may have been had with the proposed methods and to call attention to any details that might not be in compliance with the specifications. It is especially important that the inspector discuss any inspection requirements that may delay fabrication, if improperly scheduled, such as welding operator and procedure qualification tests and radiographic inspection.

The first shop contact by the inspector is the inspection of materials before fabrication. The fabricators are instructed to enter on their orders to the mill the fact that the steel is subject to inspection and test witnessing by representatives of the State; thus, while the metal is still in the steel mill, it receives a small amount of surface inspection and is identified to mill test reports by a direct representative of the State. The specifications for all California welded work require chemical as well as physical tests of all parent material, except in certain cases where the use of A.S.T.M. Designation: A7 steel is specified. The reports are forwarded to the Sacramento Headquarters of the Materials and Research Department where they are reviewed by the welding engineer before being sent to the assigned inspector. Thus, any special metallurgical problems that might arise during normal welding procedure are called to the attention of the inspector so that he is forewarned. This has been found to be

ClibPDF - www.fastio.com

especially important for A.S.T.M. Designation: A242 steels, since the specifications for these steels, as they are now written, permit a wide latitude insofar as the chemical compositions are concerned.

As soon as the steel begins to arrive in the shop, the inspector identifies it to his mill test reports, identifying the steel by heat number. At this time, if it is planned to use several types of steels that might be cut up and so lose their identity, the inspector requests that the shop properly control the various steels so that they can be identified throughout fabrication. One method suggested is to completely spray one side of each plate with a cheap paint so that visual identification is possible throughout fabrication no matter how small the pieces; another method is to spray the diagonal corners of plates and ends of bars and rods. As soon as the shop begins to handle each of the individual slabs of steel, the inspector gives them their first "four side" inspection so as to determine the possible presence of surface defects. (This probably should be done at the mill, but the expense to do so is claimed to be prohibitive.)

The welding electrodes, wire, and flux are thoroughly identified at this time also. This normally is performed by inspection of electrode and flux containers and mill test reports. If there is any doubt in the inspector's mind, such materials are sampled and sent to the laboratory for analysis.

The next step is the qualification of welding procedures and both manual and automatic welding operators. The fabricator should initiate this step well in advance of the actual work so as to minimize delays that may result due to test failures. The general specifications used to control the fabrication of welded highway

©libPDF - www.fastio.com

bridges in California are the Standard Specifications for Welded Highway and Railway Bridges of the American Welding Society, D2.0-56. These specifications prequalify certain joints when made on material conforming to A.S.T.M. Designation: A373 (or in certain cases to A.S.T.M. Designation: A7). Joints other than those listed and all joints in any material other than the two listed above must be prequalified by tests before starting fabrication. This latter fact should be covered in the special project specifications. All procedures and all welding operators must be qualified before the actual welding can commence. Each weldor or welding machine operator must be qualified by test for the position or positions for which he will be used during the conduct of the work. Certificates from other agencies are not recognized; however, if a man has been qualified on previous State work, the inspector may accept that fact as prequalification.

It has been our experience during this qualification period that occasionally the cart is put before the horse and an attempt will be made by the fabricator to qualify a procedure before the operator is qualified. This often results in the procedure being disqualified, not necessarily because there is anything wrong with the procedure, but merely because the weldor could not weld properly.

It should also be pointed out here that, while theoretically the joints prequalified by specification should be joints that can be fabricated with little difficulty by any qualified weldor, it has been our experience that certain of the prequalified groove joints can lead to difficulty if not made to close tolerances, especially where radiographic quality work is required. It is California practice to radiograph each qualification test plate

ClibPDF - www.fastio.com

for groove welds before proceeding to the machining. This is relatively inexpensive to do and often eliminates needless machining and testing expense.

With a few exceptions, California follows the current A.W.S. procedure and operator qualification tests exactly. One exception is the use of radiography as discussed above. The balance of the exceptions concern modifications of qualification tests of procedures and operators of automatic and semi-automatic machines. These were discussed previously and are as shown on the Figures 2 through 5 in the Appendix. The actual steps followed during the manufacture of the various procedure test plates is to manufacture the exact type of joint proposed using the parent metal, electrode (or wire and flux combination), welding machine characteristics, technique, and speed that are to be used during the actual fabrication. For groove type joint, the plate is first radiographed (usually x-ray) and, if it passes, is machined into the various test specimens and the routine tests performed. The same procedure is followed for operator qualification plates except here the joints must conform to the test procedure specifications. The fabricator is offered the option either to machine and test the specimens under the supervision of the State inspector in his plant or to send them to the Sacramento laboratory for machining and testing.

Most of the time the fabricator elects to do the operator qualification tests in his plant so as to expedite the process.

As soon as the material is properly identified and the operators and procedures qualified, then actual fabrication is ready to begin. Actual fabrication is controlled almost entirely by continuous visual inspection. Experienced and competent visual inspection is the key

ClibPDF - www.fastio.com

to sound welded structures. An inspector, to be competent in this work, must know and understand welding, must know and understand the specifications and standards of workmanship, and must recognize and know the reasons for the defects that can occur during welding. Several of these defects and their causes have been noted by illustrations on Figures 8 through 13 in the Appendix.

It must always be recognized that the welding operator, during the instant of welding, is the one man in control of the entire process. Most of the duties of the inspector are finished when the actual welding starts. In other words, if he has made sure that the weldor is qualified, that the joint to be welded is shaped properly and is clean and completely free of moisture, and that the established procedure is being followed, then he need only check for mistakes and equipment failures or variations. If this fact is fully comprehended, then it is easy to understand why no operator except one highly qualified and completely conscientious in his work should be allowed to work on a major bridge structure.

Occasionally, difficulties will develop during structural welding that are quite complex and require the services of a highly skilled welding engineer to give advice to the welding inspector. The California Division of Highways maintains a metallurgical laboratory in Sacramento to perform routine review of all welding inspection as well as to furnish special advisory service.

Most of the difficulties that occur during the welding of structures, however, are usually traceable to a relatively simple departure from the established procedures, or excessive variations in the mechanical or electrical equipment. Our experience has shown that if the inspectors assure themselves of the following

ClibPDF - www.fastio.com

points it is very seldom that difficulties will be encountered. Good practice requires that all joints be clean before welding. This usually requires that the surfaces to be contacted and for at least an inch on each side of the weld area the metal be cleaned so as to be free of all scale, slag, oil, dirt, and other miscellaneous foreign materials. Grinding is the normal cleaning procedure followed; however, there are some shops that use specialized grit blasting machines to perform this cleaning operation. Good practice requires that steel be free of moisture and be reasonably warm so as to be properly welded. Most fabricators find that the use of a preheat of about 300° F. insures a trouble-free joint in that such heat will drive off excess moisture and at the same time will minimize any tendency towards distortion or cracking caused by shrinkage. Good practice requires that once a procedure is established there shall be no deviation from that procedure. Specifications carefully outline the tolerances that are allowed from a qualified procedure; however, in spite of this, it is often necessary to remove many feet of weld metal merely because someone has decided that the machine was not going fast enough, so when the inspector is not looking, the voltage and amperage and speed are turned up with the foolish idea of getting maybe 15% more footage per minute. Even if it was not for the fact that the weld would probably have to be taken out and done over, it is doubtful whether or not this 15% extra in speed is a real gain. This is because under any circumstances it takes extremely efficient handling of the steel to get much benefit out of any increase in speed during the actual welding operation. Occasionally, variations beyond the control of the operator can cause defective

ClibPDF - www.fastio.com

welding. This can sometimes be detected by changes in the sound of the arc during the actual operation but is usually detected by a post-fabrication inspection by observance of the shape and condition of the weld.

There are certain tools that an inspector finds absolutely necessary during his visual inspection of the completed weld. The first is a penetrant dye kit. This is used to check for surface cracks or by grinding down under the surface to trace a sub-surface crack. Our inspection staff also occasionally makes use of a portable hardness testing machine to check the hardness of the weld and heat affected zone. Such machines, however, are difficult to use in tight places or on sloping surfaces. Special advantage is taken by the inspector of the runover tabs used during the production of all weldments. Such tabs are used by the fabricator to assure that the weld, whether it is a butt joint or a fillet weld, is carried completely full size throughout the entire joint. The tabs are extra pieces of metal tagged onto the base metal at the end of the joint. After the work is completed, they are removed and discarded. The inspector sections, polishes, and etches a sampling of such runover tabs so as to be able to inspect the internal structure of the weld. These can also be sent to the Sacramento laboratory for metallurgical examination. Since it is not required that the parent metal for such tabs conform to specifications, such examination can be considered only indicative. They are not necessarily representative of the structure. Some use is also made of trepanning tools and magnetic particle inspection for special investigation into some of the more complex defects that can occur during shop fabrication. In addition there are

ClibPDF - www.fastio.com

various miscellaneous small tools such as gages, flashlights, etc. that are useful to the inspector.

Radiography is used on all welded highway structures in this state. It is used as a supplement to visual inspection of welded butt joints. With the exception of special cases, it is never used on fillet welds. Normal procedure calls for 80% of all butt welds designed to resist primary tensile stresses to be radiographed and 25% of all butt welds to carry primary compression stresses to be radiographed. Due to the lack of a nationally accepted radiographic standard for welded highway bridges, this state has developed and is using the radiographic standards shown on Figure 1 in the Appendix. These standards are thoroughly discussed in a paper presented to the 39th Annual Meeting of the Highway Research Board (Reference 4).

Radiographic work performed in the fabrication shop normally requires the use of one of the radioactive isotopes. Usually Cobalt 60 is used for this purpose, although it may be Cesium 137 or Iridium 192. This requires that an area be roped off for the safety of personnel during the actual radiographic operation. The area to be roped off depends upon the power of the radioactive source. It is the policy of the Division of Highways to conduct this operation so as to interfere as little as possible with the normal operation of the fabrication shop. Since most butt welding is performed before the plates are actually fabricated into the complete member, it is to the shop's advantage that the butt weld be radiographed immediately after completion and before assembly into the completed member. A discussion with shop management, therefore, will usually result in an area being developed in the shop that can be used for such inspection purposes and still not interfere with shop production.

ClibPDF - www.fastio.com

Final inspection is made after the member is sandblasted. This inspection is to determine the preparedness of the surface to receive and hold paint. At this time all the welding has been inspected. However, a final superficial examination is made of the welds so as to locate certain surface defects that are difficult to locate before the blasting operation. These are: (1) trapped slag inclusions in coped corners of stiffeners, (2) excessive splatter, (3) surface condition of steel (scale, scab, surface laminations, etc.), (4) undercutting of welds.

FIELD WELDING

The Bridge Department of the California Division of Highways considers the welding of primary structural members in the field to be a projection of shop fabrication into erection. The Laboratory is therefor requested to supervise the inspection of all primary field welding.

The standards followed in the field are the same as those used during shop fabrication. This means that all weldors and procedures must be qualified before the steel can be joined and that all the before discussed points of good practice must be followed.

The same policy is also followed in the use of radiography, the one difference being that the state-owned mobile radiographic equipment shown on Figure 8 in the Appendix is usually used in the field whereas the services of a commercial agency are usually used in the shop. The employee assigned to this mobile unit is a highly skilled radiographic technician especially trained in the inspection of welded construction. The mobile unit is equipped so that this inspector can qualify the welding operators, inspect the

ClibPDF - www.fastio.com

fabrication and radiograph the joints. Thus he provides a complete welding inspection service to the Resident Engineer.

In general the welding practice followed by the erectors on California bridge projects conforms to all other areas subject to good practice controls. There is one procedure, however, that has provoked a good deal of pro and con discussion. This is the procedure followed during the welding of the butt field splices of large bridge girders.

It is the practice of California erectors, encouraged by the State, to weld the flanges first and then the web. Normally the top flange is welded first, then the bottom flange and the web welded last following a back step sequence and keeping both flanges heated to about 300° F. at the start and all during the welding of the web. At the conclusion of the welding of the web, the entire girder is allowed to air cool uniformly.

The reason this practice was adopted and is encouraged rather than that advocated in A.W.S. Specification D2.0-56 Section 504(g) is that our early experience with this latter method was adverse. Each time it was used on our girders, which normally consist of heavy flanges and relatively light but deep webs, this A.W.S. specification suggested procedure resulted in cracking and unsightly distortion of the web. Since switching to the presently used procedure of welding flanges first and web last and preheating the flanges during the web welding, we have had no difficulties under our method of controlled inspection.

ClibPDF - www.fastio.com

REFERENCES

1. Standard Specifications for Welded Highway and Railway Bridges, D2.0-56. American Welding Society, 33 West 39th Street, New York 18, N.Y.
2. Inspection Handbook for Manual Metal-Arc Welding, B1.1-45. A.W.S., 33 West 39th Street, New York 18, N. Y.
3. Materials Manual, Testing and Control Procedures, California State Printing Plant, Documents Section, North 7th Street and Richards Blvd., Sacramento, California.
4. Radiographic Inspection of Welded Highway Bridges, John L. Beaton, 37th Annual Meeting Highway Research Board, Washington, D. C.

ClibPDF - www.fastio.com

PROPOSED CALIFORNIA RADIOGRAPHIC STANDARD

All butt welds designed to carry primary stresses shall be subject to radiographic inspection. The presence of any of the following listed defects in excess of the limits indicated shall result in rejection of the weld as defective:

1. Cracks — no cracking shall be allowed regardless of length or location.

2. Overlaps, lack of penetration, incomplete fusion — none shall be allowed.

3. Inclusions; including slag, porosity, and other deleterious material, — less than 1/16" in greatest dimension shall be allowed if well dispersed such that the sum of the greatest dimensions of the inclusions in any linear inch of welded joint shall not exceed 3/8" and there shall be no inclusion within 1" of the edge of a joint or a point of restraint.

4. Inclusions; including slag, porosity, and other deleterous material, — 1/16" or larger in greatest dimension shall be allowed providing such defects do not exceed the limits indicated by the chart, Sheet 2, of this Standard.

ClibPDF - www.fastio.com

SUGGESTED CALIFORNIA RADIOGRAPHIC STANDARDS FOR ALLOWABLE INCLUSIONS

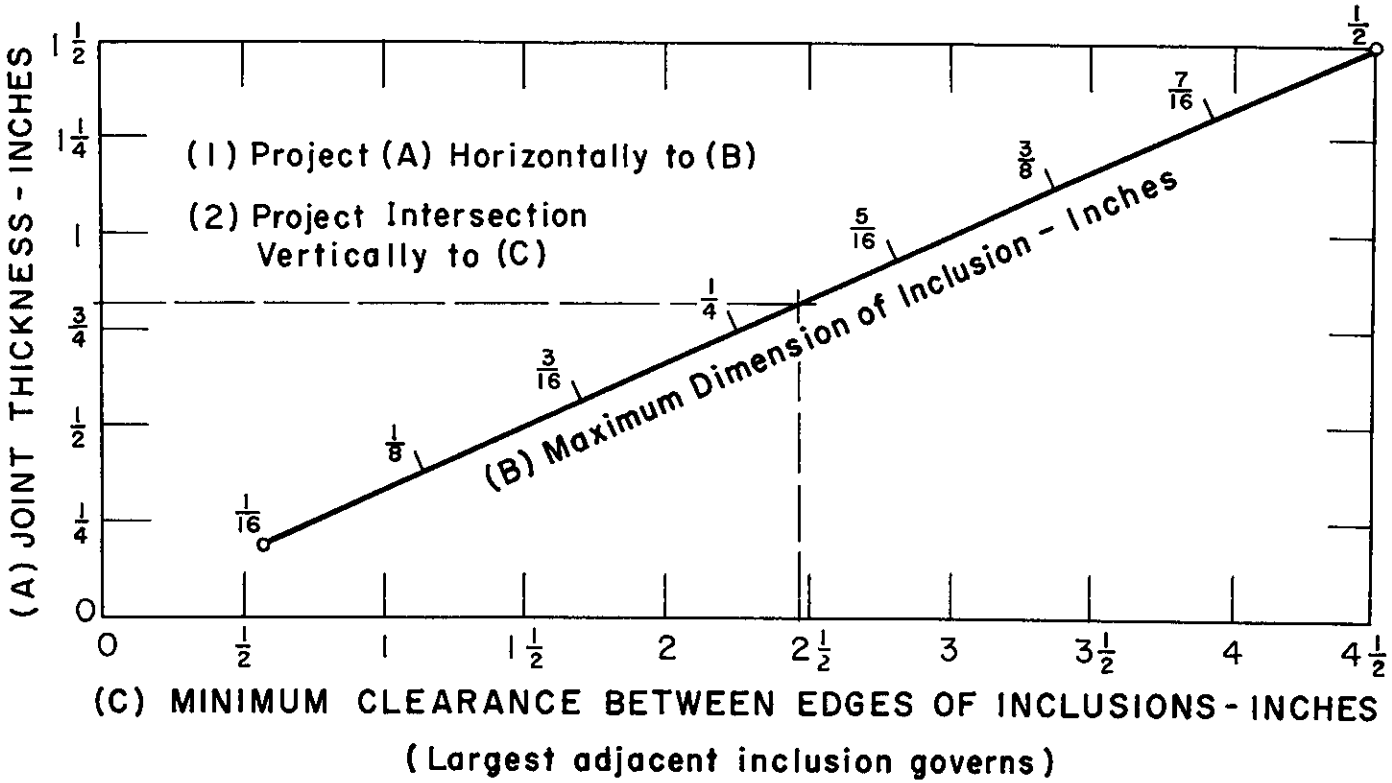

NOTE:

1. Minimum distance from edge of inclusion to free edge of plate or toe of flange fillet weld is twice the clearance between inclusions.
2. Inclusions with any dimension greater than 1/2" are not acceptable.
3. For joint thicknesses greater than 1-1/2", the minimum allowable dimension and spacing of inclusions shall be the same as for 1-1/2" joints.

Fig. 1
(Sht. 2 of 2)

ChipPDF - www.fastio.com

Figure 2

PROCEDURE TEST
Automatic & Semiautomatic
Mechanical Properties of Weld Deposit*

NOTE:
2. Free Bend, Side Bend, and Tensile Specimens shall be prepared and tested as indicated in the A.W.S Standard Specs. Welded Highway & Railway Bridges D2.0-56, Appendix D.

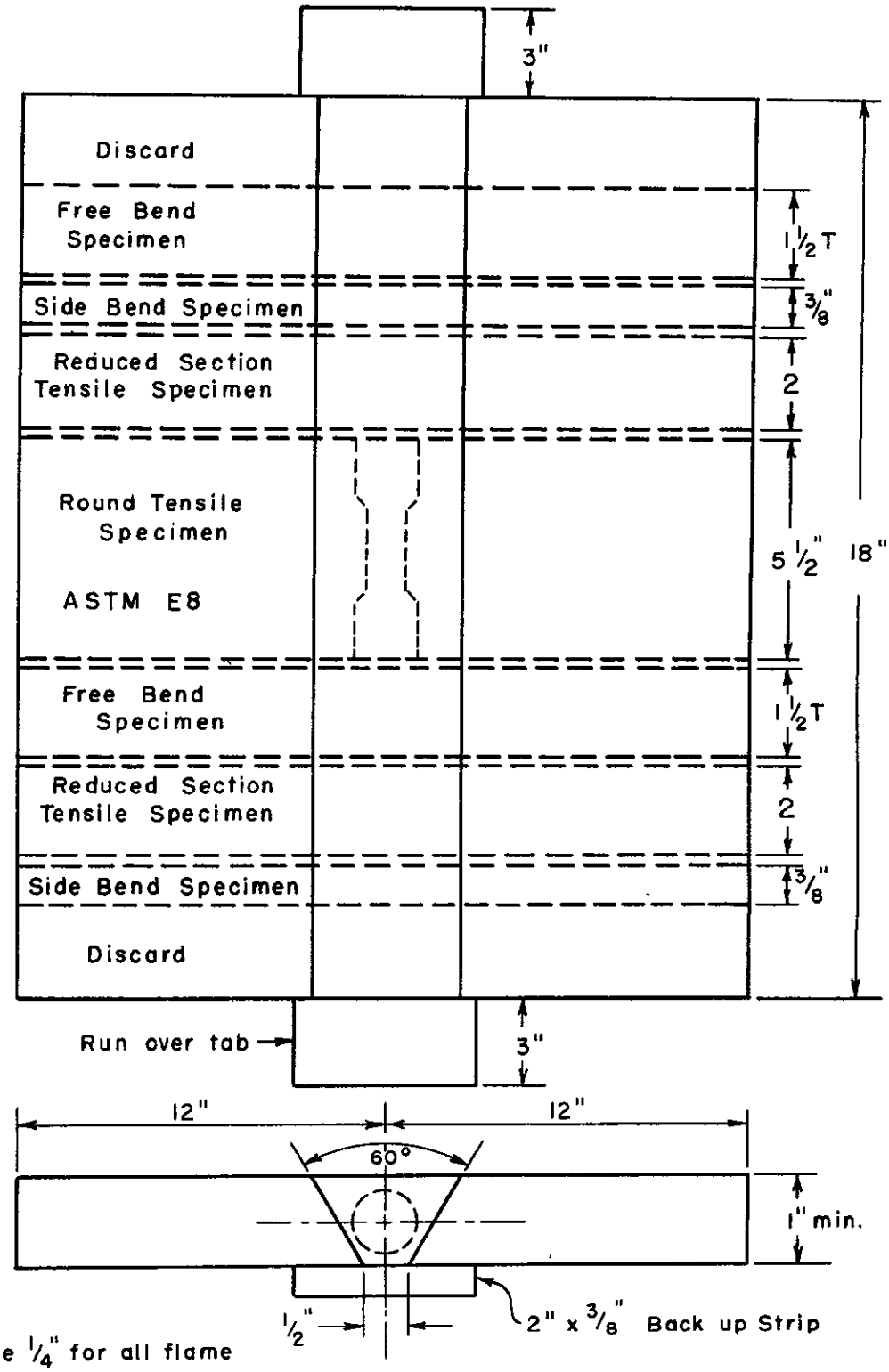

NOTE:
1. Leave ¼" for all flame Cutting

*Identical test plate to be used for proposed joint qualification, except that proposed joint is to be used rather than as shown and round tensile specimen may be omitted.

California Division of Highways
Materials & Research Department
June 1958

ClibPDF - www.fastio.com

OPERATOR QUALIFICATION TEST 3/8" to 3/4" PLATE

Automatic & Semiautomatic

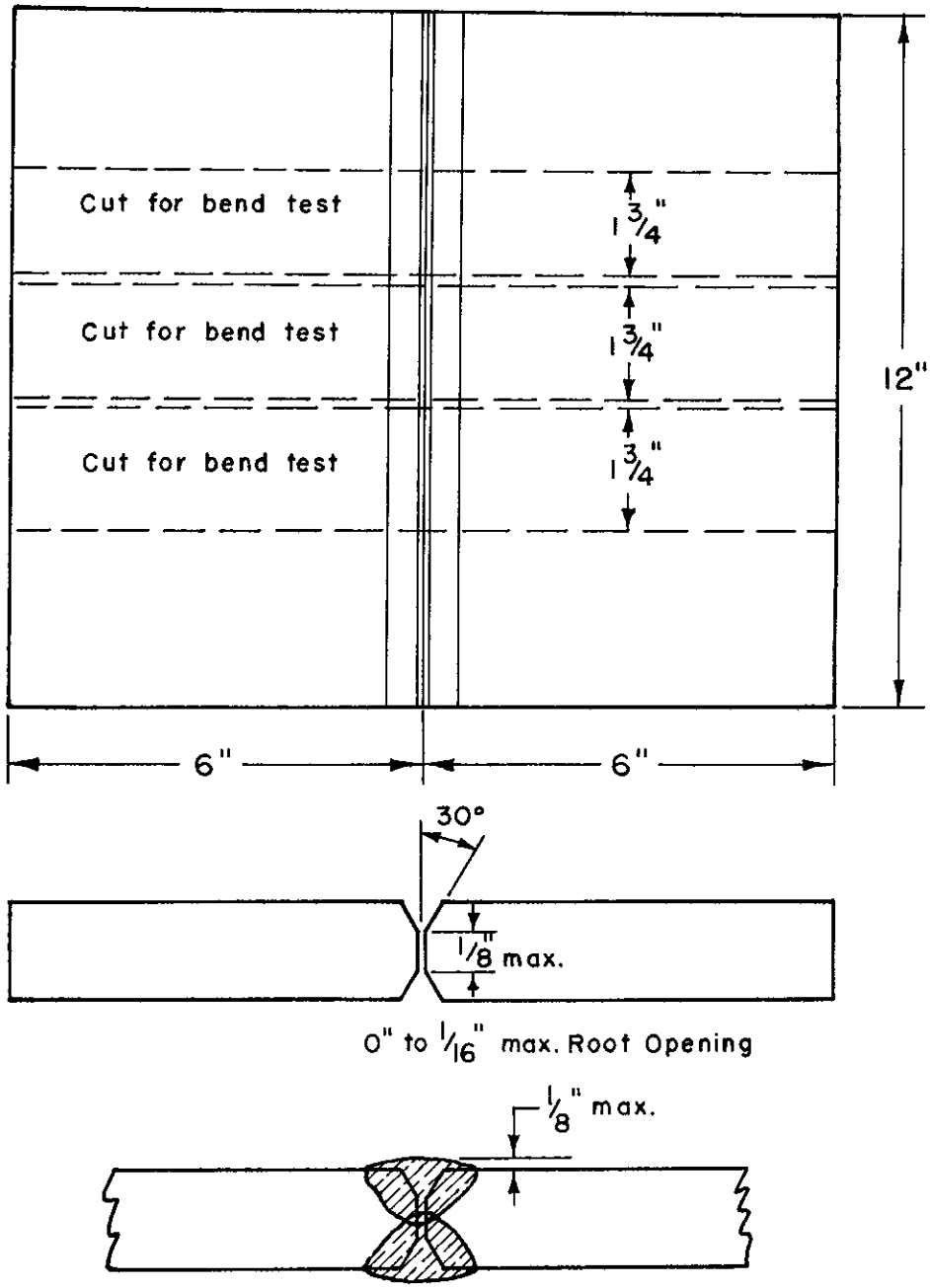

Note:
Alternate edge preparation as required by the procedure for single & double butt welds.

California Division of Highways
Materials & Research Department
June 1958

ClibPDF - www.fastio.com

OPERATOR'S QUALIFICATION TEST $\frac{3}{4}$" to $1\frac{1}{2}$" PLATE
Automatic & Semiautomatic

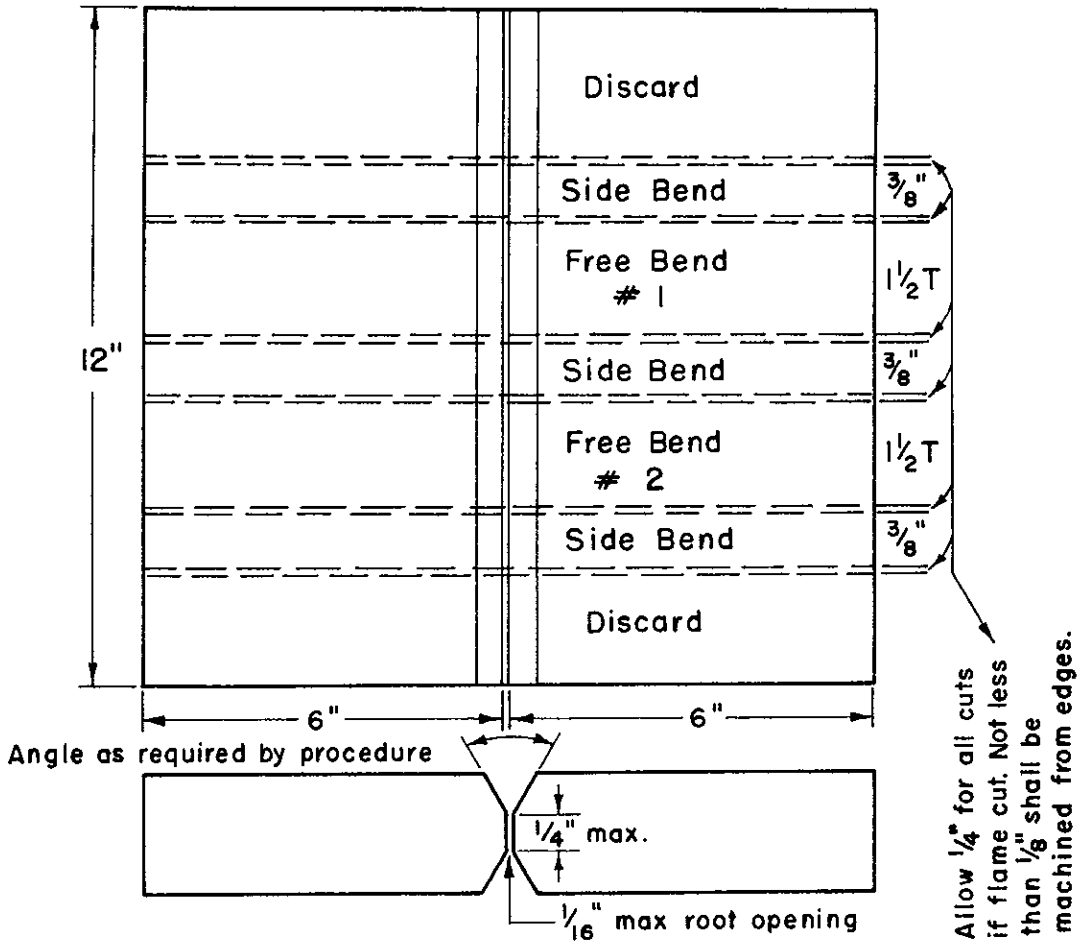

FREE BEND TEST

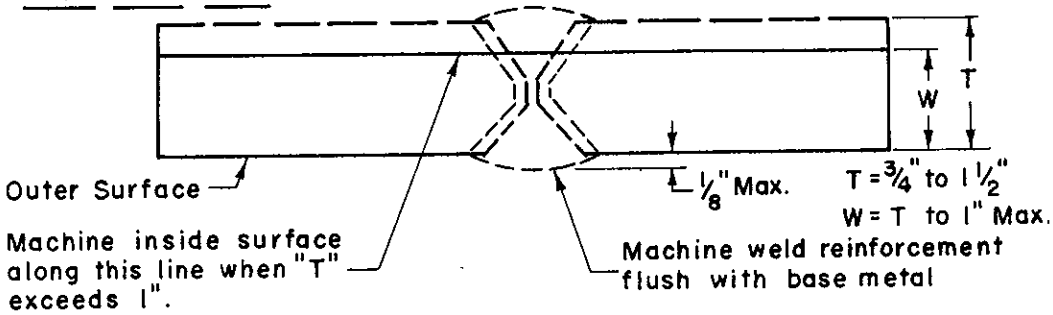

When making bend tests for plate over 1", place outer surface of weld to outside of bend. The two tests shall be made on opposite sides of the test plates.

California Division of Highways
Materials & Research Department
June 1958

ClibPDF - www.fastio.com

Click PDF - www.fastio.com

OPERATOR & PROCEDURE QUALIFICATION
FILLET WELD TEST
Automatic & Semiautomatic

Figure 4

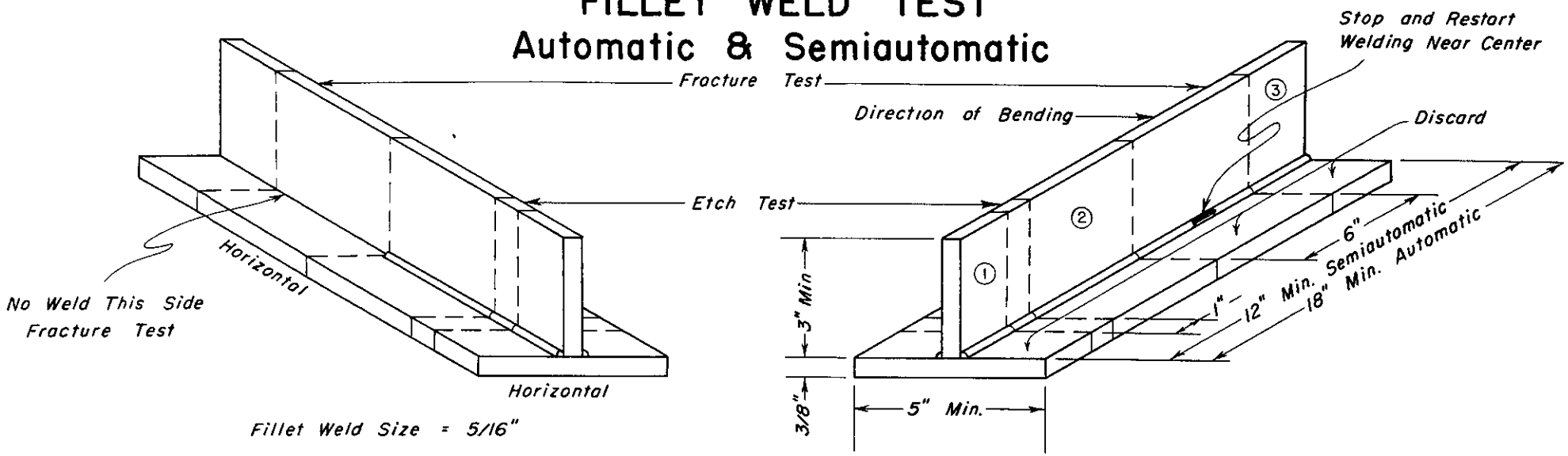

OPERATOR QUALIFICATION

PREPARATION OF TEST SPECIMENS

Specimens may be sawed, machined, or flame cut from welded test joint. The ends of etched specimen shall be smooth for etching.

TESTING

Fracture Test

The stem of the 6" section shall be loaded laterally in such a way that the root of the weld is in tension. The load shall be steadily increased until the specimen fractures or bends upon itself.

Macro Etch Test

The specimen shall be etched with a suitable solution to give a clear definition of the weld.

RESULTS

Fracture Test

A specimen shall not fracture or if fractured shall not contain defects such as slag, overlap, undercut, etc., totaling more than 1/2". Evidence of cracks in a weld or incomplete root fusion shall constitute grounds for rejection.

Macro Etch Test

The welds shall show fusion to the root but not necessarily beyond root and be free from cracks. Convexity or concavity of welds shall not exceed 1/16". Both legs of weld shall be equal to within 1/16".

California Division of Highways
Materials & Research Department
June 1958

PROCEDURE QUALIFICATION FILLET WELD TEST

Automatic and Semiautomatic

Figure 5

FILLET WELD KEYHOLE "T" BEND TEST

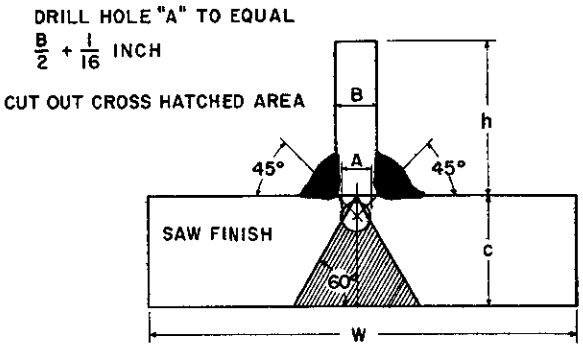

SPECIMEN

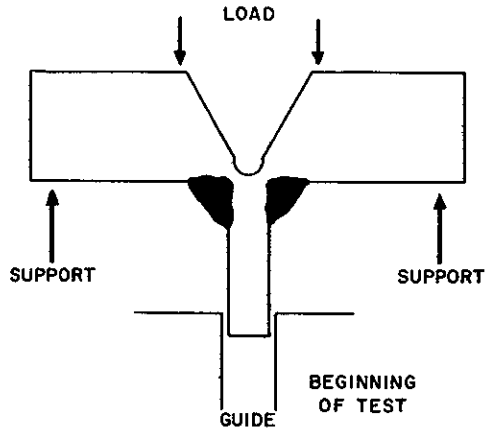

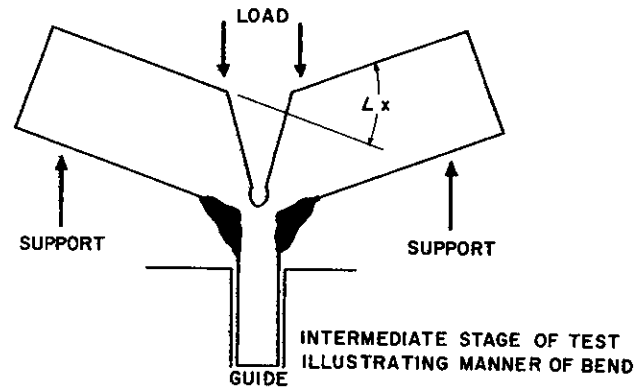

Load and bend to failure or until keyhole "V" notch is closed.
If weld metal or heat affected area fails, weld is not acceptable.

METHOD OF TESTING

T BEND SPECIMEN

h = > 4B or 2"
W = > 3C or 5"
Minimum thickness = > $1\frac{1}{4}$ c
or $1\frac{3}{4}$ "

At least 2 specimen must be prepared from each specimen.

I. PREPARATION OF SPECIMEN

Two or more specimen may be sawed or machined (not flame cut) from the #2 portion of the sample as illustrated on fig. 4. These specimen are prepared as shown on fig. 4 and above.

II. TESTING

A. Fracture Test } See Operator Qualification Test
B. Macro Etch Test }
C. Bend Tests
Specimen shall be loaded and failed as illustrated above.
D. Hardness Tests
Hardness Tests shall be made on a lightly etched section with a suitable machine.

III. TEST RESULTS REQUIRED

A. Fracture Test } See Operator Qualification Test
B. Macro Etch Test }
C. Bend Test
∠x must not be less than 25° at failure.
D. Hardness
Brinell Hardness of heat affected zone and parent metal shall be within the following limits.

1. Max. Brinell Hardness

$$\frac{\text{Max. Specified or Tested T.S.}^{(b)}\text{ of P.M.}}{500} + 50$$

2. Min. Brinell Hardness

$$\frac{\text{Min. Specified T.S. of P.M.}}{500}$$

This test may be performed with a Rockwell Machine and converted to Brinell Hardness using ASTM conversion chart.

(a) See Sheet 3
(b) Whichever is least
T.S. Tensile Strength
P.M. Parent Metal

California Division of Highways
Materials & Research Department
June 1958

Clib PDF - www.fastio.com

INSPECTION OF STUD WELDING FOR COMPOSITE DECK BRIDGE GIRDERS

The following items outline the inspection procedures to govern the work for welding of studs for shear lugs;

1. The process and weldor must be qualified by a procedure test. This test shall consist of welding three studs of the size to be used on a plate of the thickness to be used and then bending the stud at least 30° out of line. The bending is to be done by hammering.

   The welded stud shall indicate complete fusion and exhibit a weld flash or "fillet" for a minimum of 90% of the circumference. There shall be no indication of lack of fusion, or undercut weld. Where the "fillet" does not completely "ring" the stud, fusion shall be clearly defined between the stud and plate.

2. The area where the stud is to be attached must be completely free of all foreign material such as oil, grease, paint, etc. If the mill scale is sufficiently thick to cause difficulty in obtaining proper welds, the scale shall be removed from the weld area by grinding. To do this, it will normally be necessary to grind the area to a bright appearance.

3. After welding, ten (10) studs shall be selected at random along the top of the girder. These 10 studs shall be hammered towards the center of the span out of line 30°. Not more than one of these test studs shall show any signs of failure.

   If more than one stud fails, then all studs in the girder shall be hammered (but not necessarily bent the full 30°) and all that fail shall be replaced. Before replacing the stud, the area shall be ground free of any metal left from the old weld, or in the case of a pocket, it shall be filled with E-6016 weld metal and ground flush.

4. Visual inspection of the completed stud shall show weld flashing not less than 90% around the stud and shall indicate complete fusion. Deficiencies may be corrected by a manual weld of not less than a 1/8" all around fillet of E-6016 electrode.

ClibPDF - www.fastio.com

CHECK LIST FOR INSPECTION OF STRUCTURAL WELDING

Welding inspection should be performed in sequence with the shop fabrication operations so a minimum of interference between inspection and fabrication will be realized.

A. Prior to Welding

(a) Condition of Base Metal

Visual
Mechanical Properties
Chemical Analysis

(b) Base Metal Defects

Laminations, pipes
Cracks
Surface Irregularities
Flatness

(c) Joint fit up

Edge Preparation
Beveling
Root: Opening and Beveling
Runoff Tabs
Cleaning (Grinding) & (Blast Cleaning)
Backings
Tacking
Dimensions

(d) Assembly Fabrication Set-up

The special set-ups used for assembly fabrication, welding jigs, clamping, aligning, and precambering, etc. (only to see that uniform practices are employed).

B. During Welding

(a) Preheat and interpass temperatures.
(b) Root preparation prior to welding.
(c) Root pass weld.
(d) Second side root preparation (back gouging or chipping).
(e) Cleaning between passes.
(f) Appearance of weld passes. (Comparison with workmanship standards).
(g) Variations from approved welding procedures.
(h) Repair of defective welds.

ClibPDF - www.fastio.com

C. Acceptance Inspection

(a) Cleaning for inspection.
(b) Nondestructive testing.
(c) Visual inspection. (Surface appearance of welds.) (Conformity of welds with drawings.)
(d) Penetrant dye inspection. (Analysis surface defects.)
(e) Radiography inspection. (Analysis internal defects.)
(f) Proof testing. Structural defects.

D. Repair

(a) Marking for acceptance.
(b) Marking for rejection.
(c) Inspection after repairs.

The inspector will be responsible for the marking of the welding that requires repair, and the acceptance of the repaired welds.

ClibPDF - www.fastio.com

MOBILE RADIOGRAPHIC UNIT

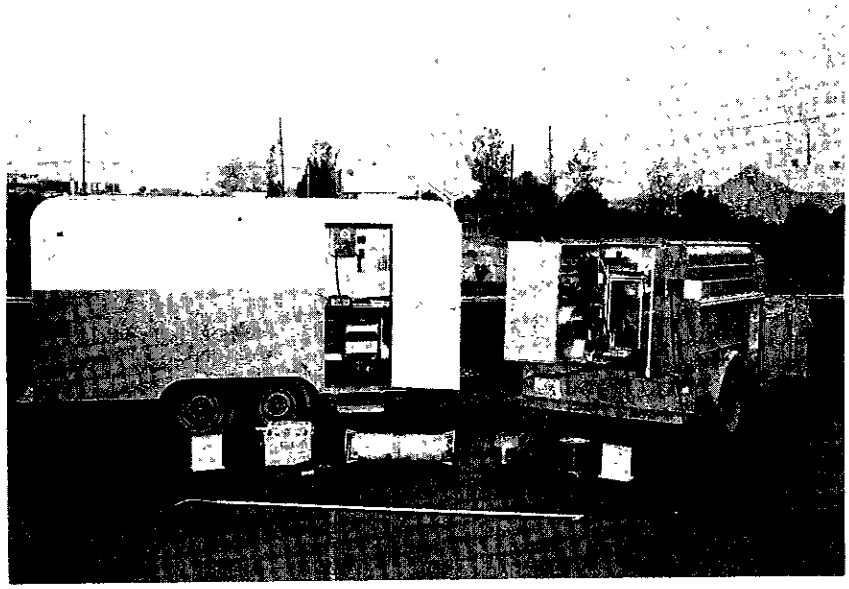

No. 1

Materials and Research radiographic truck and trailer. This unit is equipped with a portable 175 KV G.E. x-ray machine, 20 curie Cesium 137 isotope in a portable projector, and 1 curie of Cobalt 60 to use as a point source. The unit is equipped with power supply for the x-ray machine and the trailer for darkroom film dryer, lights, film viewers, and power tools, grinders, drills, and hoist mounted in the truck. The radiographic trailer back opens up for a small shop for testing of weldor qualifications.

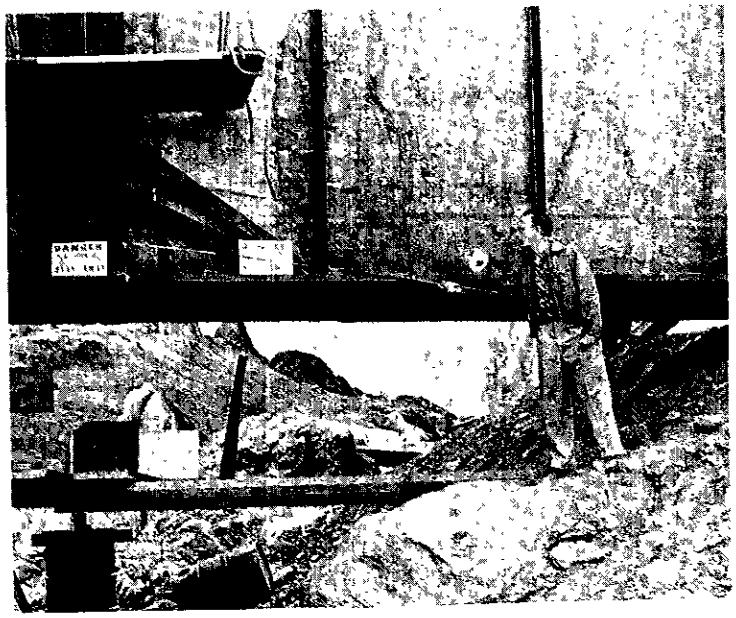

No. 2

A typical field radiographic operation. Here the radiographic technician is placing the Cobalt 60 source into the container for radiographic exposure on the bottom flange of the bridge girder field splice.

ClibPDF - www.fastio.com

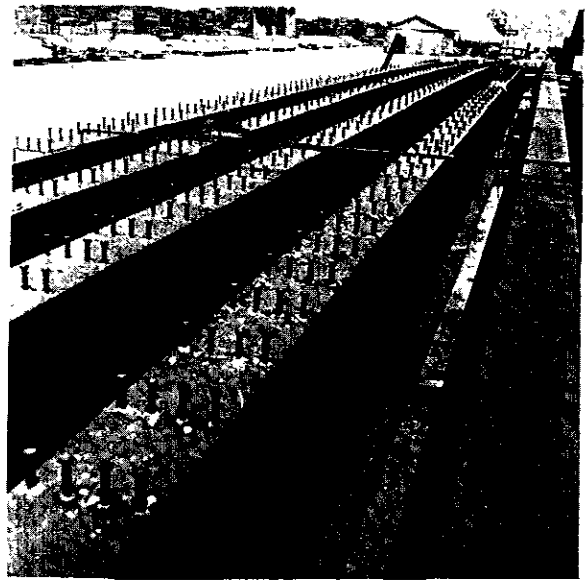

No. 3

Typical welded stud operation in progress and completed for composite deck action.

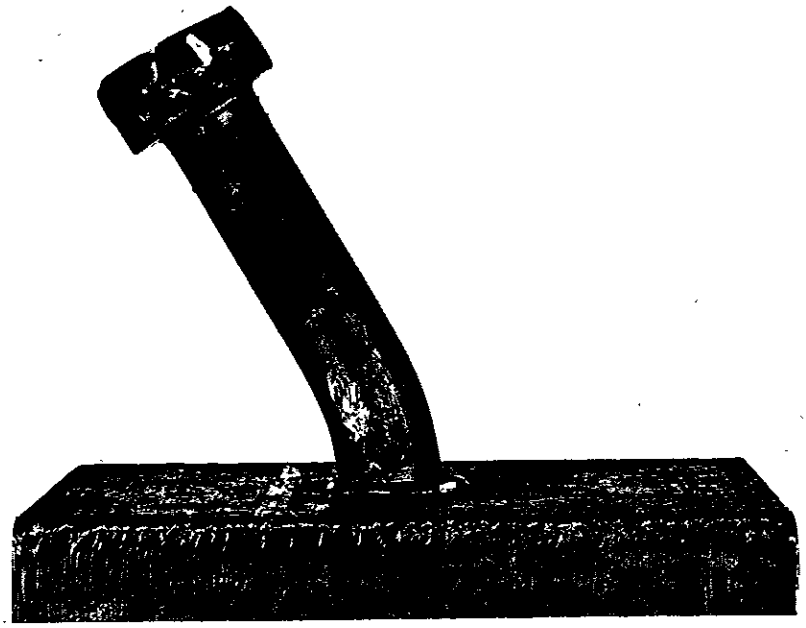

No. 4

A 7/8" test stud welded to a plate and bent by hammering to approximately 30° angle for soundness test.

ClibPDF - www.fastio.com

No. 5

Here a Materials and Research inspector is trepanning a 1/4" core from a fillet weld for examination during a special investigation.

No. 6

The 1/4" core obtained by trepanning is sectioned and etched for examining for defects and structure such as can be seen here.

ClibPDF - www.fastio.com

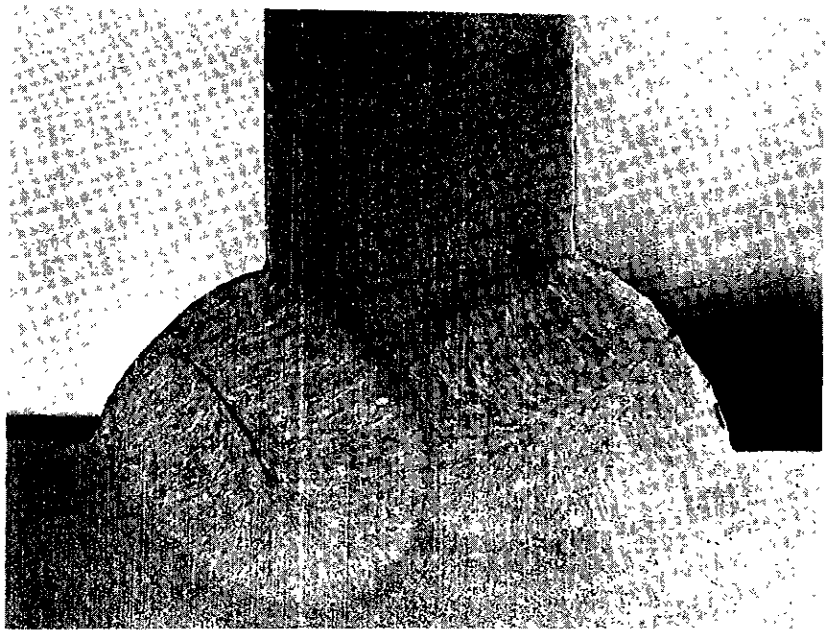

No. 7

Cracking of this type is associated with submerged arc welding and is the result of attempting to obtain excessive penetration which has resulted in this "familiar" pear shaped weld.

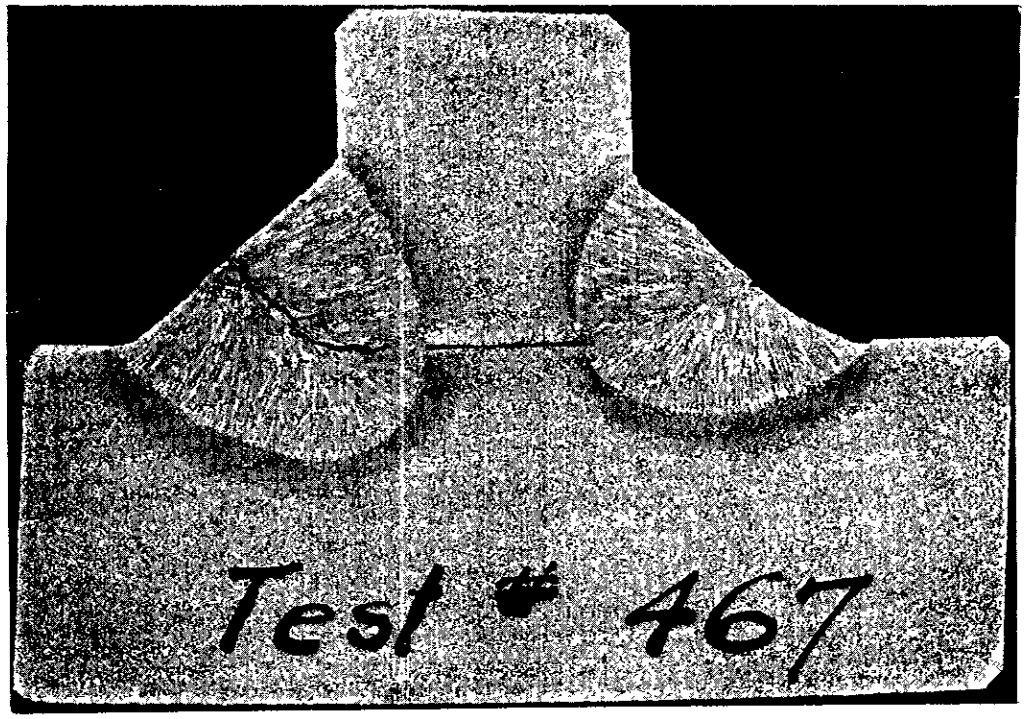

No. 8

Cracking of this type is also associated with submerged arc welding and is often caused by excessive voltage.

ClibPDF - www.fastio.com

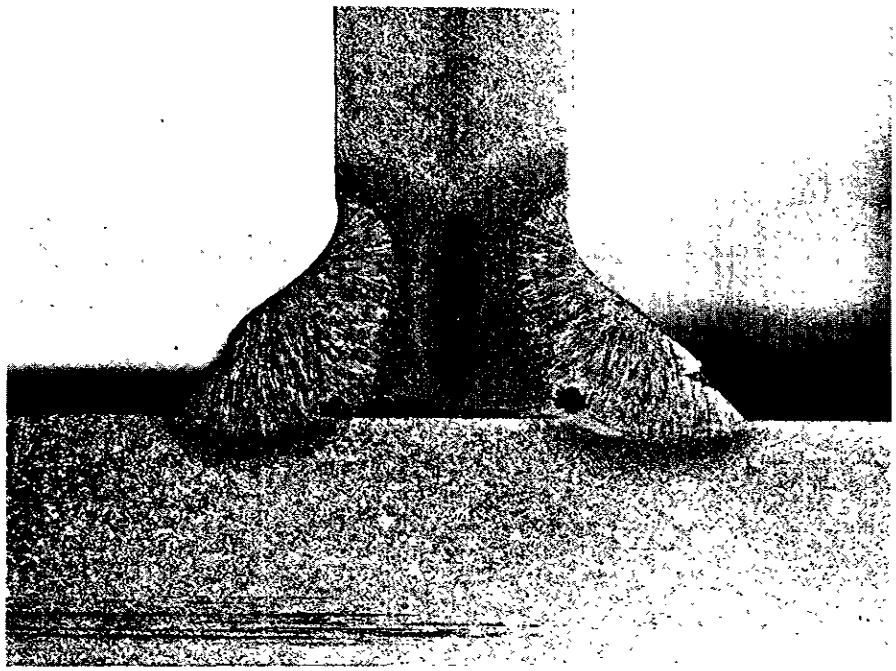

No. 9

The condition of a fillet weld may be affected by the angle of electrode in relation to the joint to be welded. Here the electrode was allowed to burn off on the weld metal and not in the crater in the parent metal. Lack of fusion and slag in the root of the weld has resulted. This weld was placed using a semi-automatic submerged arc welding machine.

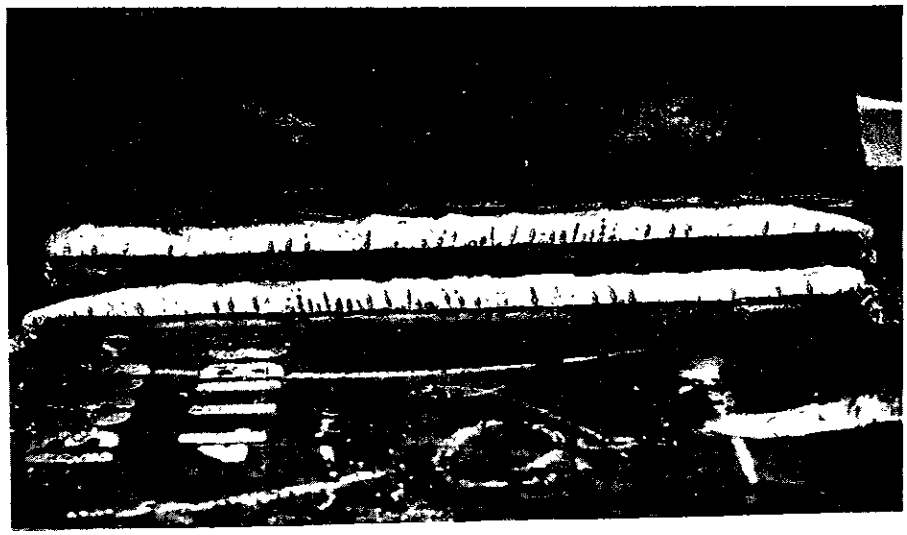

No. 10

Welding is also affected by moisture, mill scale, rust, oil, dirt, etc. Here can be seen "worm holes" in a fillet weld caused by a combination of the above.

ClibPDF - www.fastio.com

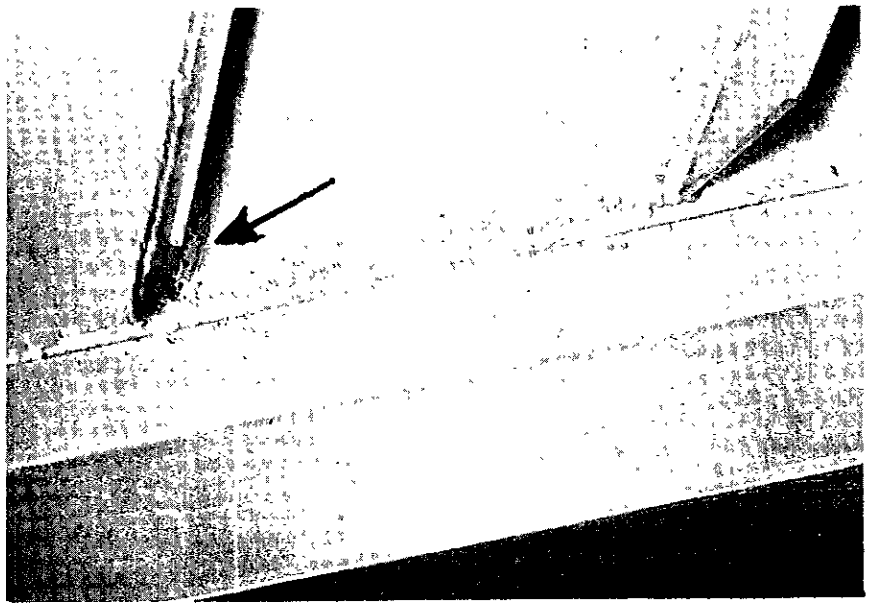

No. 11

The cleaning of weld splatter, or "dingle berries" as commonly called by the weldor, cannot be ignored. Here can be seen the result of lack of cleaning. As indicated by the arrow, corrosion has started where the weld splatter has dropped off exposing the bare metal.

No. 12

This shows a section taken from a defective fillet weld, commonly called "roll over". Notice the deep crevice which shows lack of fusion. This is a magnification at the toe of the weld. The naked eye does not reveal this incipient crack, but it always exists in the presence of "roll over" or overlap.

ClibPDF - www.fastio.com