12

STATE OF CALIFORNIA
DEPARTMENT OF PUBLIC WORKS
DIVISION OF HIGHWAYS

DYNAMIC FULL SCALE TESTS OF BRIDGE RAILS

60-14

DND

LIBRARY COPY
Materials & Research Dept.

December 1960

ClibPDF - www.fastio.com

State of California
Department of Public Works
Division of Highways
Materials and Research Department

December 1960

LIBRARY COPY
Materials & Research Dept.

Mr. James E. McMahon
Assistant State Highway Engineer, Bridges
Sacramento, California

Dear Sir:

Submitted for your consideration is a report of:

DYNAMIC FULL SCALE TESTS

OF

BRIDGE RAILS

Study made by . . . . . Structural Materials Section
Under direction of . . . . . J. L. Beaton
Work supervised by . . . . . R. N. Field
Instrumentation by . . . . . R. N. Field and Wm. Chow
Report prepared by . . . . . J. L. Beaton and R. N. Field

Very truly yours,

F. N. Hveem
Materials and Research Engineer

JLB/RNF:mw
cc: Hdqtrs. Depts.
Bridge Dept. (25)

ClibPDF - www.fastio.com

SYNOPSIS

Full scale dynamic tests were made of three designs of bridge rail submitted by the Bridge Department for this study. The three designs included a metal beam guard rail mounted on steel posts and two types of concrete railings.

This report describes the procedure used in testing the rails by oblique, high speed collisions with passenger vehicles and a 17,000 pound bus.

It was found that none of the rails would withstand the impact of the 17,000 pound bus under test conditions, and only one design (Exhibit No. 3) restrained high-speed impacts of passenger vehicles.

ClibPDF - www.fastio.com

I. INTRODUCTION

With the increase in traffic volume and the weight and cruising speed of the modern automobile, it has become necessary to evaluate dynamically the designs of bridge rails presently in use and to consider new and more effective functional designs for future installations.

It is the purpose of this report to outline the results of tests conducted on three bridge rail designs and to evaluate these rails in light of this test data and other information collected from actual operating experience including earlier curb and bridge rail tests. The results of this study were reported verbally to the Bridge Department immediately following the test program.

These tests were included in a series of median barrier full scale tests, and the information obtained from both bridge rail and barrier tests was used in the final evaluation of each.

The Bridge Department submitted three designs for evaluation. These three bridge rails were tested using passenger cars and a 17,000 pound bus. The test procedure used in testing the bridge rails was as outlined in the report dated May 8, 1959, to Mr. McCoy titled "Dynamic Full Scale Tests of Median Barriers".

ClibPDF - www.fastio.com

II. CONCLUSIONS

1. Design I (Exhibit 2) proved inadequate to retain a heavy passenger car collision.

2. Design II (Exhibit 3) is the only design of the three tested that can be considered adequate to resist high-speed high-angle passenger car collisions. It did not prove adequate to retain a bus, but the test results indicate this to be the result of the geometry of the barrier rather than the over-all strength.

3. Design III (Exhibit 4) deflected excessively under collision load, and if the front wheels had not had support (as they would not over the edge of a bridge), the car probably would have cartwheeled over the rail. This design could probably be strengthened to restrict the deflection to a reasonable amount. It also probably could be considered adequate in those areas where only low angle oblique collisions would be expected.

4. By comparing the results of this series of tests with those conducted previously (Reference 1) it appears that a solid, smooth wall concrete barrier is more effective than a wall containing balusters or any other type of opening that would serve as a "trap" to engage solid portions of the colliding vehicle. If openings are needed, past studies indicate they should be no lower than 27" above the pavement surface.

ClibPDF - www.fastio.com

III. TEST PROCEDURE

Four tests were conducted by driving a medium weight 4-door sedan automobile into the three types of rails at a speed of approximately 60 mph and an angle of collision of 30°. The same weight of car, speed, and approach angle were used in all four tests so as to obtain as good a comparison as possible between the various designs. A final test was made on the one design which proved effective in retaining a passenger vehicle, by driving a 34-passenger bus into collision with the rail at 40 mph and at an angle of 30°. (The bus at 40 mph represented slightly more than twice the kinetic energy developed by the cars at 60 mph.)

The 60 mph speed and the 30° angle of approach combination was selected as representative of the more severe type of oblique accident with a bridge rail. This speed and angle were selected after studying the results of several actual vehicle-bridge rail impact accidents, as well as from analyzing this department's past experience with many different speeds and angles of approach used during the testing of highway side barriers reported previously (References 1 and 2).

Movements of the vehicle and rail at the moment of collision were recorded by a series of high and normal speed cameras placed approximately as shown on the typical test site layout diagram (Exhibit 1) in the Appendix. Dynamic data were supplemented by deceleration recordings taken from accelerometers located in the chest cavity of an anthropometric dummy restrained by a seat belt and located in the driver's seat of the test car. All physical changes in dimensions and condition of the rail systems were listed as well as the observations and appraisals of damage to the car. These records were supplemented by visual observations during and after the collision as recorded by trained observers at the site.

ClibPDF - www.fastio.com

IV. DISCUSSION

Before discussing the findings of this study, the purpose of which was to test the resistance to collision of three designs of bridge rail, it should be mentioned that the results of previous bridge curb and rail tests (Reference 1) and the median barrier test program (Reference 2) conducted simultaneously with these tests should be considered as supplementary data to guide engineering judgment in analysing the findings of this program. The following discussion of the test program is therefore tempered by consideration of the data from dynamic tests performed on median barriers, guard rail, barrier curbing, and other bridge rails (References 1 and 2) conducted by this department in the past.

The criteria for a semi-rigid type of barrier rail prescribe a design that would be strong enough to retain the vehicle on the structure, while at the same time deforming into a smooth, long-radius curve, causing the vehicle to change direction of travel much less rapidly than when striking a rigid concrete rail. Under these collision conditions the occupants of the vehicle would be subjected to a more tolerable deceleration force than when experiencing an immediate ricocheting type collision with a rigid concrete rail.

Only one design of this type was submitted by the Bridge Department for evaluation. This design (Exhibit 4) consisted of 6" - 15.5 lb. H-Beam posts mounted on the side of the bridge deck at 6' 3" centers (using two 1 1/4" and two 3/4" bolts for each post) with a 12 gage corrugated metal beam type guard rail mounted on the posts at a height of 27" above the deck.

Upon vehicle impact with this design the connecting device between the bridge deck and the post failed, allowing excessive deflection of the rail, thus forming a pocket which entrapped the automobile. Had this occurred on an actual bridge, the vehicle would probably have gone through the rail because of lack of support beyond the edge of a bridge. The vehicle was retained during this test only because of the earth fill behind the simulated structure.

In order for a rigid bridge rail to function properly, it must retain the vehicle on the structure, reflect the vehicle at a low angle so that it continues to travel in the general direction of traffic flow and must not impart a rolling or twisting movement to the vehicle, at least not to the degree that would result in the car overturning in the traveled lanes.

Two rigid rail designs were tested. Design I (Exhibit 2) did not meet the above requirements in that it did not retain the vehicle due to structural failure of the rail element as shown in Exhibit 5.

ClibPDF - www.fastio.com

A close study of the data film from Test No. 15 (Exhibit 5) shows that the nine inch high curb imparted a rise of about 9 inches to the vehicle before it crashed into the rail. This action verifies the findings from earlier tests (Reference 1).

Design II (Exhibit 3) met all the requirements for a rigid rail when tested with passenger cars as shown in Exhibits 6 and 7. However, due to structural failure it did not retain the 17,000 pound bus at an impact velocity of 40 mph (Exhibit 9).

Analysis of this latter failure indicates that the position of the horizontal openings in this rail were the primary contributors to failure. These openings permitted the framing members of the bus to contact the balusters so that the full collision force was accepted by one post. The post failed, permitting further baluster failures and "topping of the rail" by the vehicle. There were no failures of the lower solid portion of this railing. It is our opinion (based on previous test results) that, had this solid wall portion been at least 27" high, the railing would have functioned as desired.

ClibPDF - www.fastio.com

V. INSTRUMENTATION

The collision vehicles were remotely controlled by radio during the test. A detailed description of the radio equipment and operation, the deceleration instrumentation, and the photographic equipment is included in the "Dynamic Full Scale Tests of Median Barriers" report issued by this department.

The bridge rail and the median barrier tests were conducted as one series; therefore, the instrumentation data given in the above-mentioned report are equally valid here.

In brief, the vehicles used for this test series were standard 4-door sedans 1952 and 1953 models, supplemented by one 34-passenger 17,000 pound bus. The average weight of the passenger vehicle with dummy and instrumentation was 4,000 pounds. The centers of gravity of the passenger cars were from 21" to 23" above the pavement; the center of gravity of the bus was not determined.

Installation of the radio control equipment and other modifications for each vehicle required approximately two man-days. The modifications included the installation of two uni-axial unbonded strain gage type accelerometers mounted at right angles to each other on the right hand side of the vehicle frame at Station 10 (10 feet to the rear of the front bumper). With these accelerometers the longitudinal and transverse decelerations of the frame were measured.

The anthropometric dummy*, which was restrained in the driver's seat by a lap belt during test, had two accelerometers mounted in the chest cavity in the relative position of the heart, with the axes sensitive to the longitudinal and transverse decelerations of the upper torso. Deceleration readings from the dummy were used to verify physical evidence in evaluating the possible injuries which a human would have sustained.

- -

* Sierra Engineering Company, Model 157, 6' 0" - 220 pounds.

ClibPDF - www.fastio.com

VI. REFERENCES

1. "Final Report of Full Scale Dynamic Tests of Bridge Rails and Curbs"

   Materials and Research Department
   California Division of Highways - August 1957

2. "Dynamic Full Scale Tests of Median Barriers"

   Materials and Research Department
   California Division of Highways - May 1959

ClibPDF - www.fastio.com

VII. APPENDIX

EXHIBIT 1. Plot Plan of Test Site

2. Bridge Rail Design I

3. Bridge Rail Design II

4. Bridge Rail Design III

5 through 9. Test Data Information Sheets

10. Run #15 Documentary Damage Photographs

11. Run #16 Documentary Damage Photographs

12. Run #17 Documentary Damage Photographs

13. Run #18 Documentary Damage Photographs

14. Run #25 Documentary Damage Photographs

ClibPDF - www.fastio.com

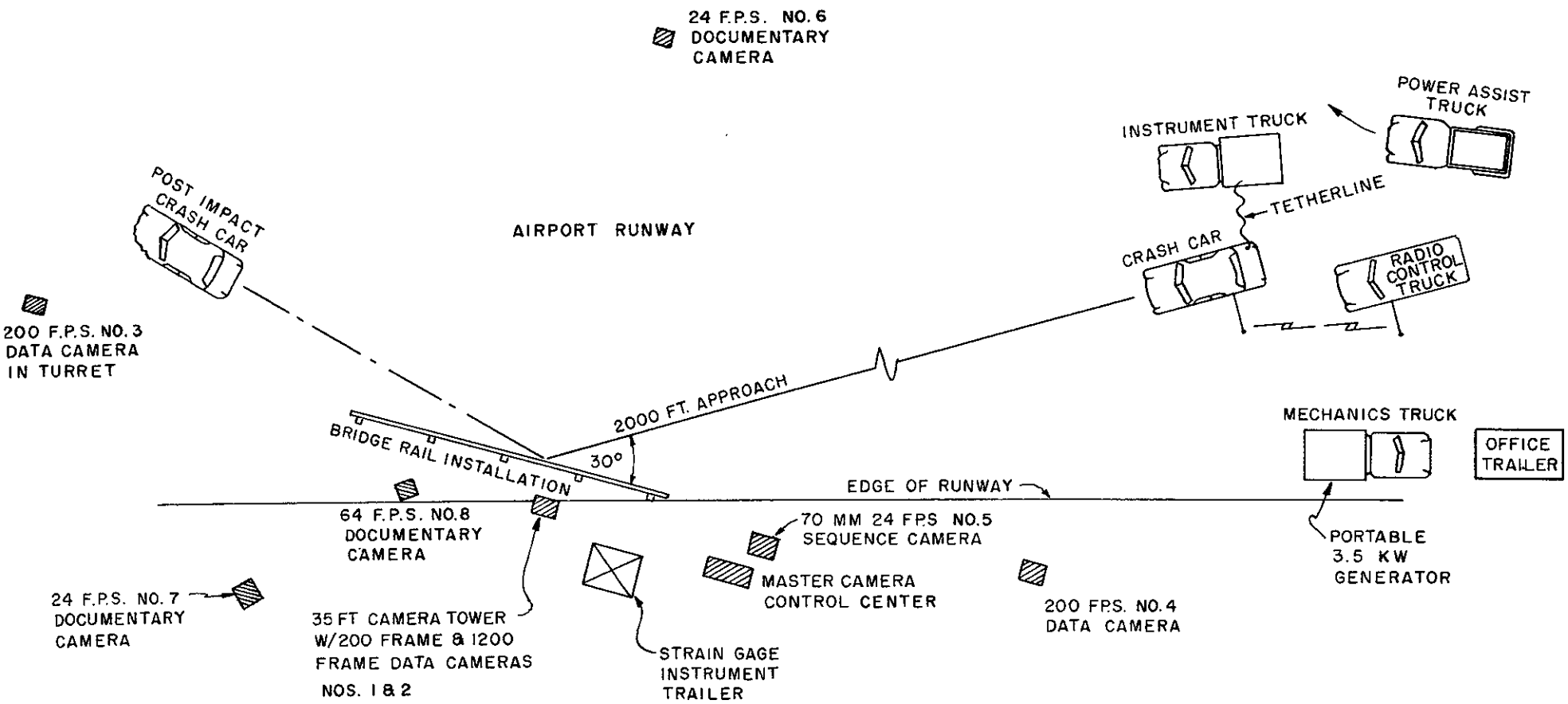

PLAN VIEW OF TEST SITE

STATE OF CALIFORNIA DIVISION OF HIGHWAYS MATERIALS & RESEARCH DEPT.

1959 MEDIAN BARRIER & BRIDGE RAIL IMPACT TESTS

EXHIBIT 1

ClibPDF - www.fastio.com

ClibPDF - www.fastio.com

EXHIBIT 2

SPECIFICATIONS

Type II Portland Cement
Class "A" Reinforced Concrete
with a class "2" finish.

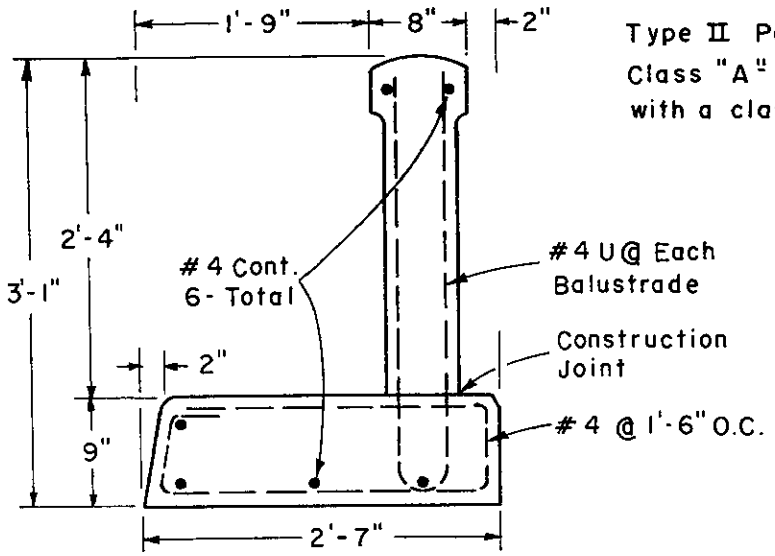

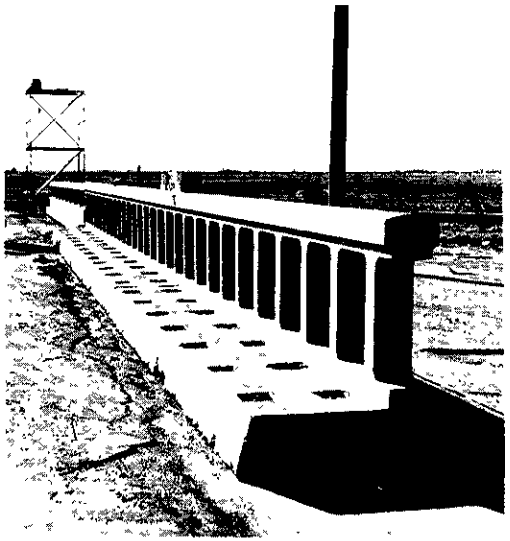

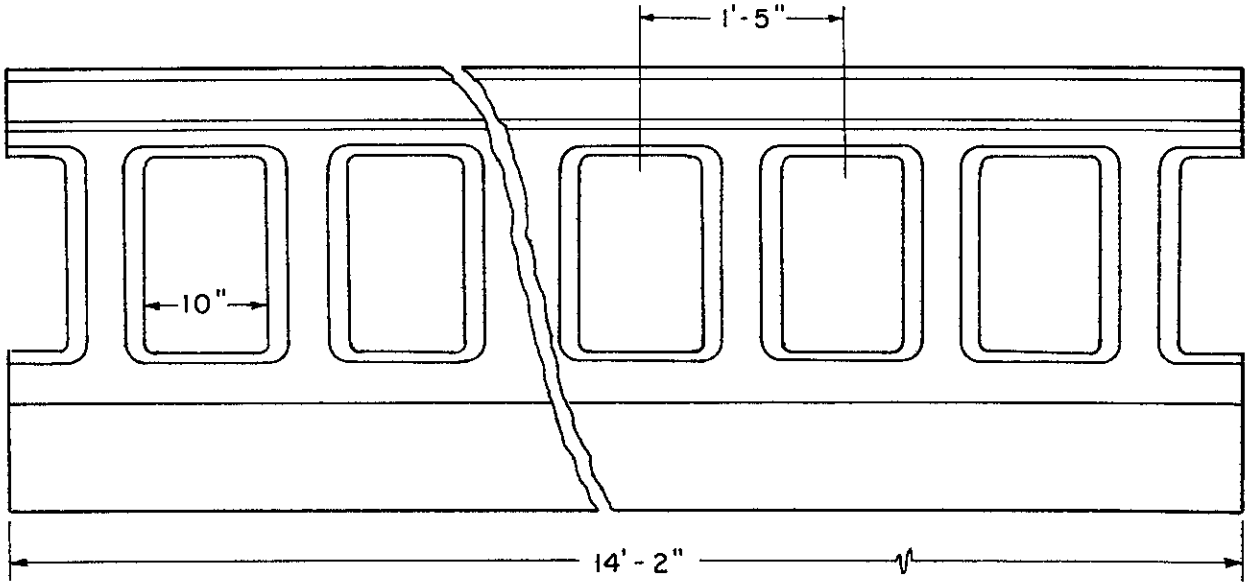

REINFORCED CONCRETE BRIDGE RAIL - DESIGN I

STATE OF CALIFORNIA DIVISION OF HIGHWAYS MATERIALS & RESEARCH DEPT.

ClibPDF - www.fastio.com

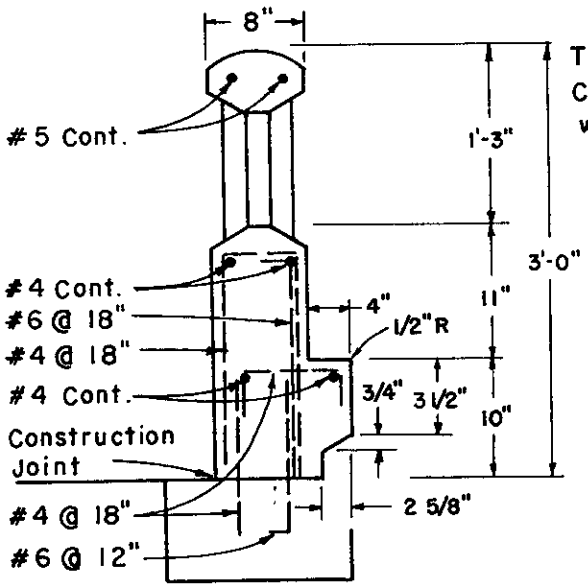

SPECIFICATIONS

Type II Portland Cement
Class "A" Reinforced Concrete
with a class "2" finish.

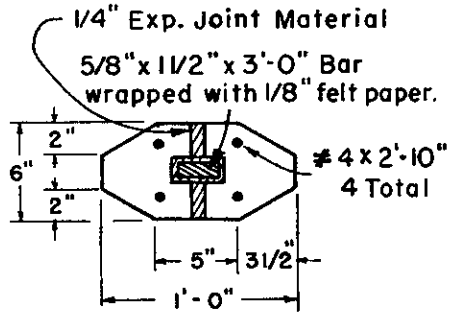

SECTION A - A

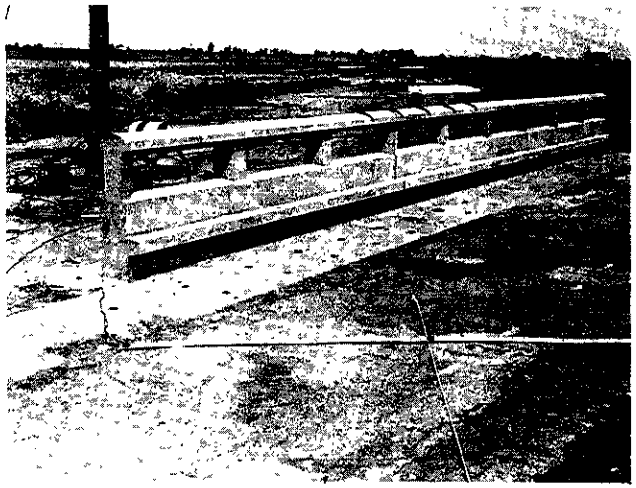

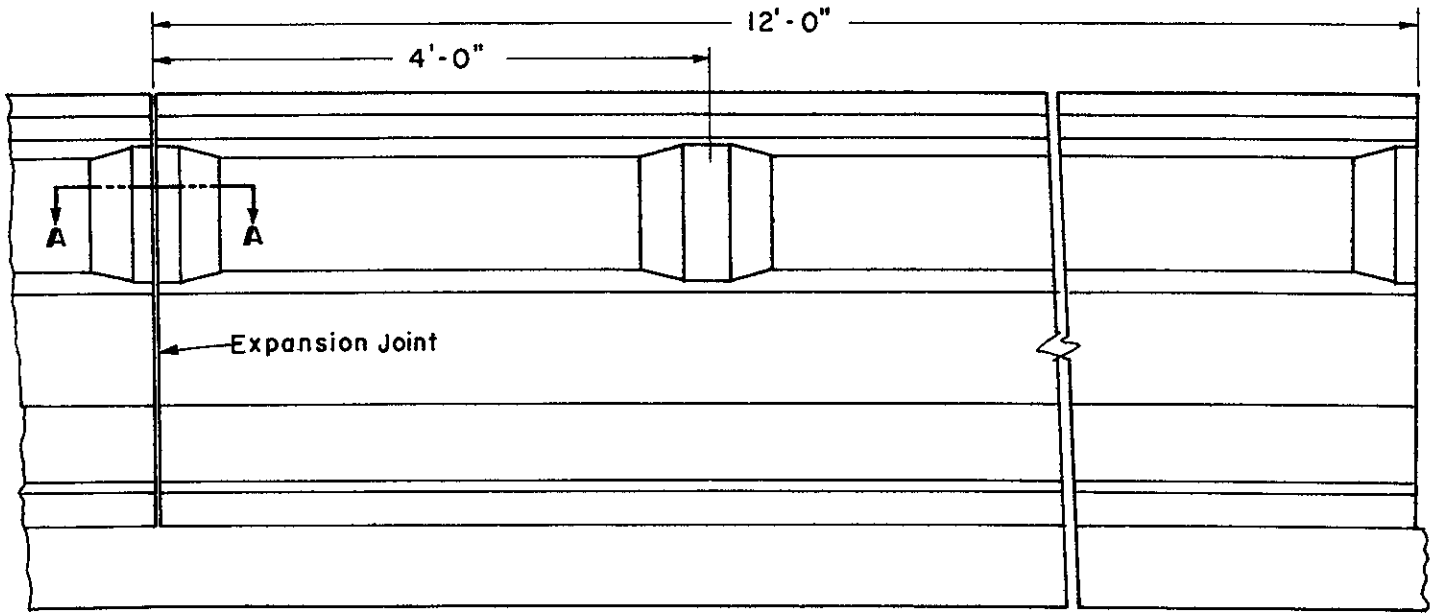

REINFORCED CONCRETE BRIDGE RAIL - DESIGN II

STATE OF CALIFORNIA DIVISION OF HIGHWAYS MATERIALS & RESEARCH DEPT.

EXHIBIT 3

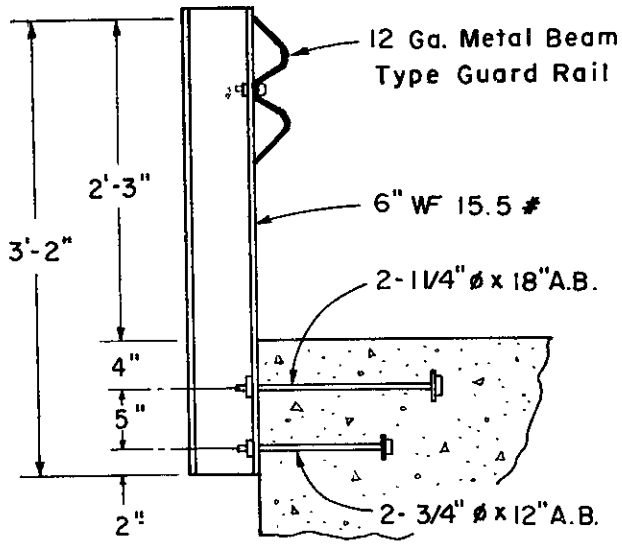

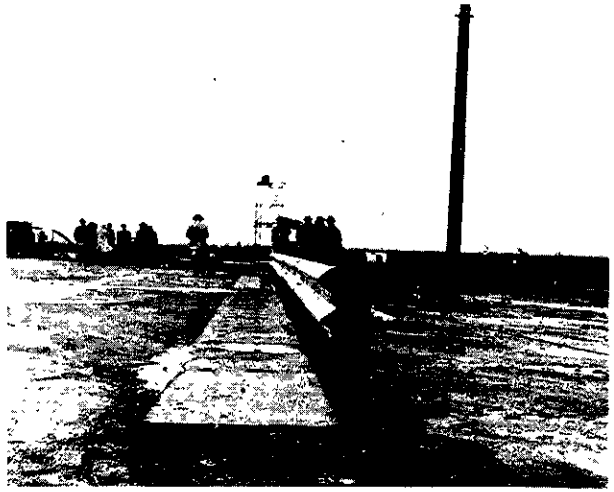

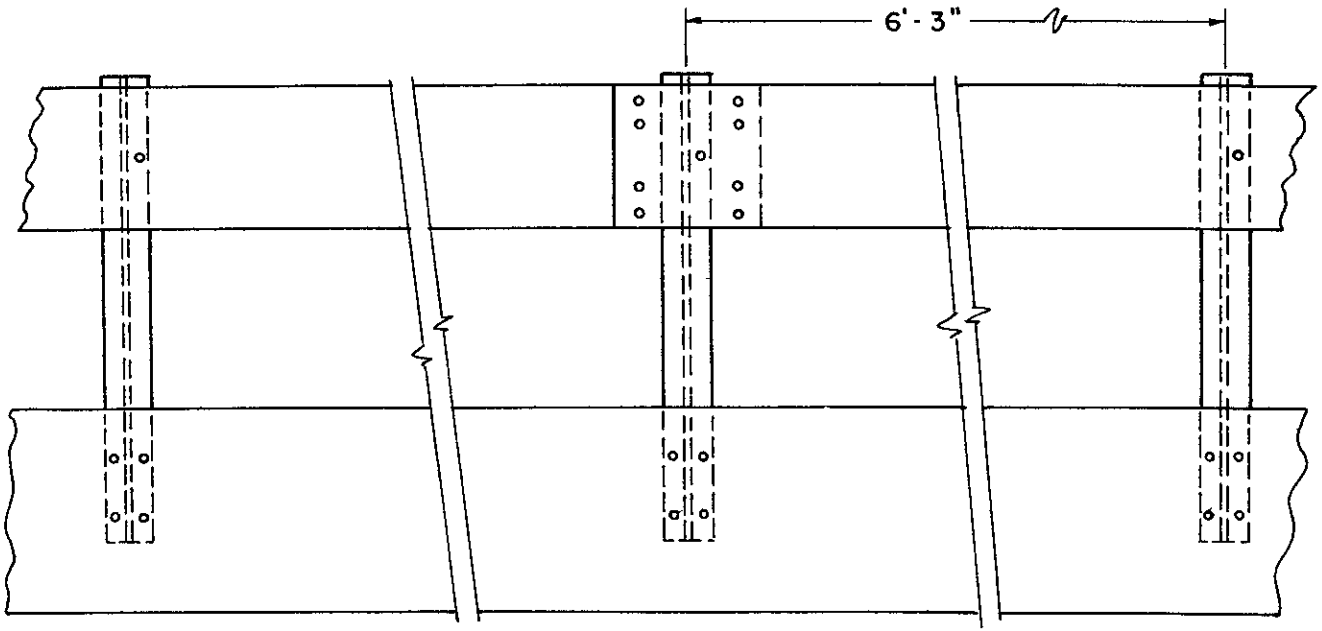

METAL BEAM BRIDGE RAIL - DESIGN III

STATE OF CALIFORNIA DIVISION OF HIGHWAYS MATERIALS & RESEARCH DEPT.

EXHIBIT 4

ClibPDF - www.fastio.com

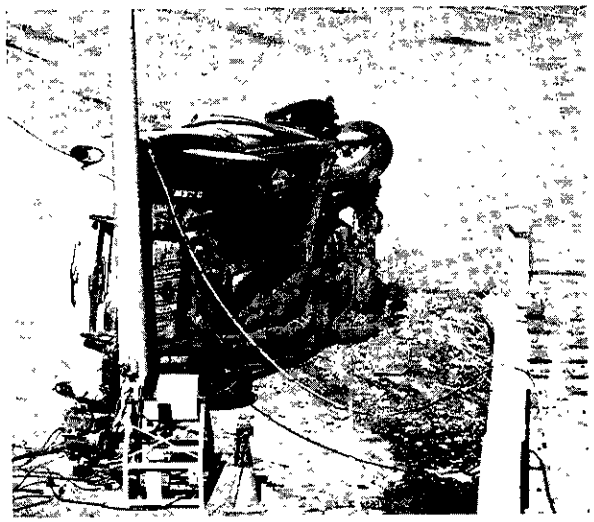

POST IMPACT

IMPACT +500 M SEC.

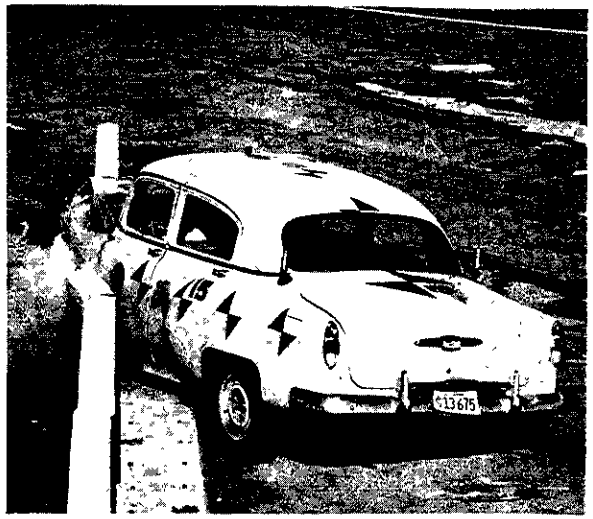

IMPACT + 50 M SEC.

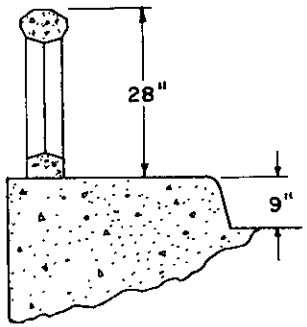

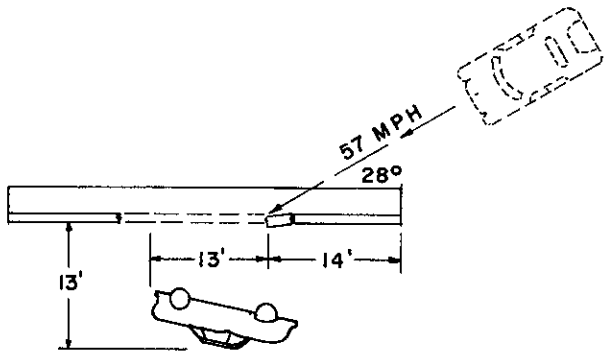

BRIDGE RAIL ..... Reinforced P.C.C.
LENGTH OF INSTALLATION .. 42'
GROUND CONDITION .... Wet

DUMMY INJURY ..... Left side, chest & head injuries.
BRIDGE RAIL DAMAGE ..... 14' Demolished
VEHICLE DAMAGE ..... Total Loss
DUMMY DECELERATION (PEAK) .... Long. ... Transv. 13 G

TEST NO. 15
DATE 1-13-59
VEHICLE ..... Chev. 53 Sedan
SPEED ..... 57 MPH
IMPACT ANGLE .... 28°
VEHICLE WEIGHT ... 3700
(W/DUMMY & INSTRUMENTATION)

STATE OF CALIFORNIA DIVISION OF HIGHWAYS MATERIALS & RESEARCH DEPT.

1959 MEDIAN BARRIER & BRIDGE RAIL IMPACT TESTS

EXHIBIT 5

ClibPDF - www.fastio.com

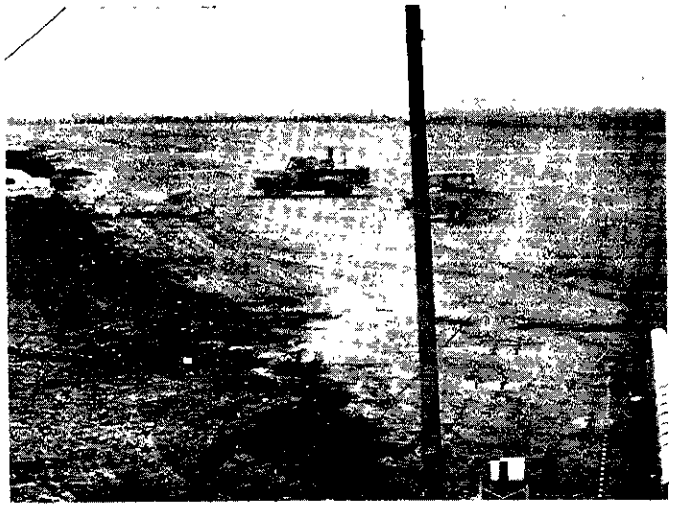

POST IMPACT

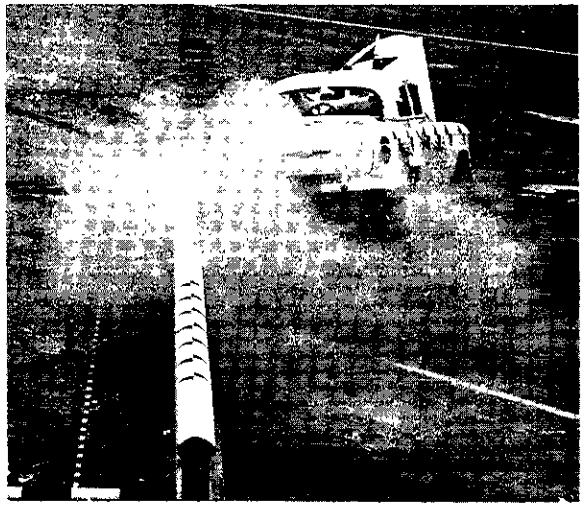

IMPACT + 475 M SEC.

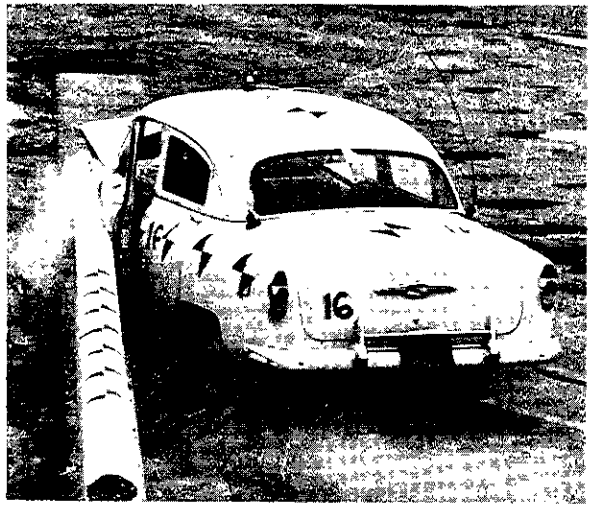

IMPACT + 75 M SEC.

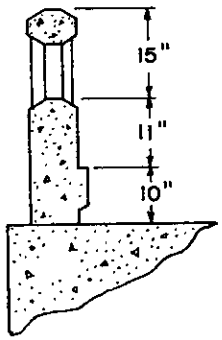

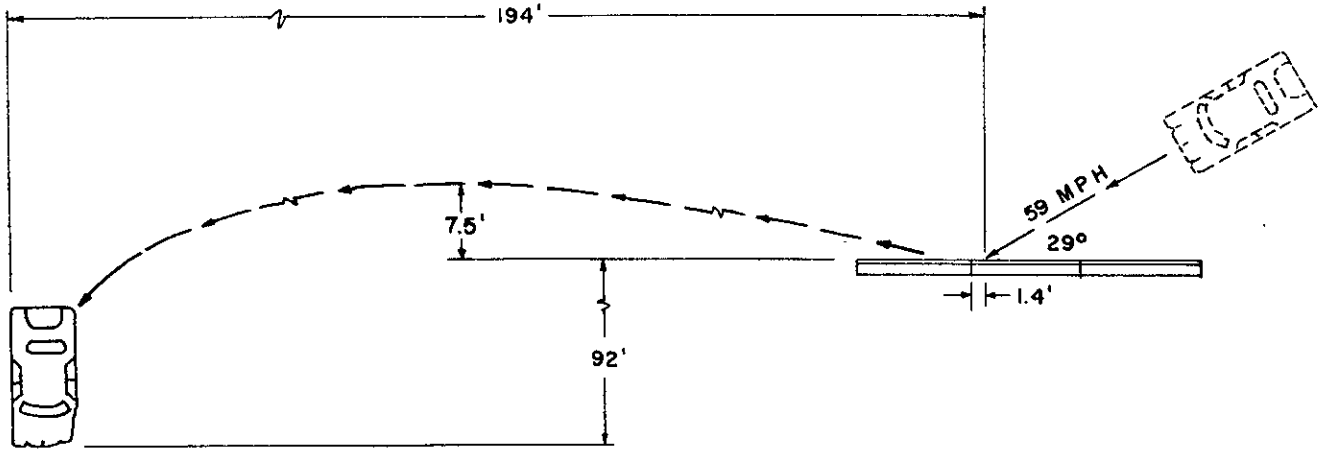

BRIDGE RAIL ..... Reinforced P.C.C.
LENGTH OF INSTALLATION .. 36'
GROUND CONDITION .. ... Wet

DUMMY INJURY ..... Severe left shoulder, side & internal injuries (Possible Fatality)
BRIDGE RAIL DAMAGE ..... Slight chipping & scratching
VEHICLE DAMAGE ..... Total Loss
DUMMY DECELERATION (PEAK) .... Long. 11 G ... Transv. 34 G

TEST NO. 16
DATE 1-16-59
VEHICLE ..... Chev. 53 Sedan
SPEED ..... 59 MPH
IMPACT ANGLE .... 29°
VEHICLE WEIGHT ... 3700
(W/DUMMY & INSTRUMENTATION)

STATE OF CALIFORNIA DIVISION OF HIGHWAYS MATERIALS & RESEARCH DEPT.

1959 MEDIAN BARRIER & BRIDGE RAIL IMPACT TESTS

EXHIBIT 6

ClibPDF - www.fastio.com

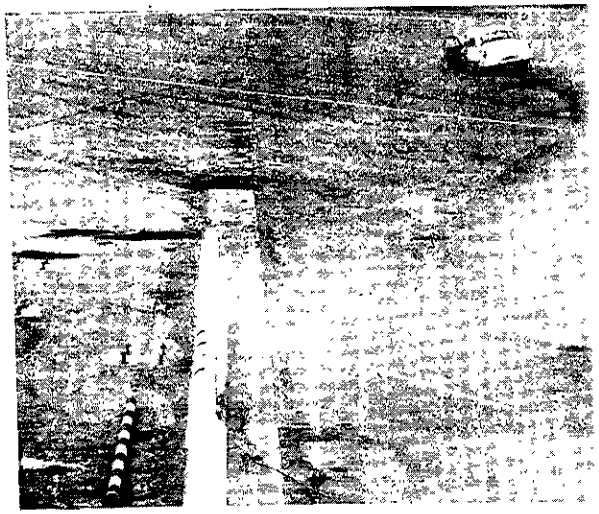

POST IMPACT

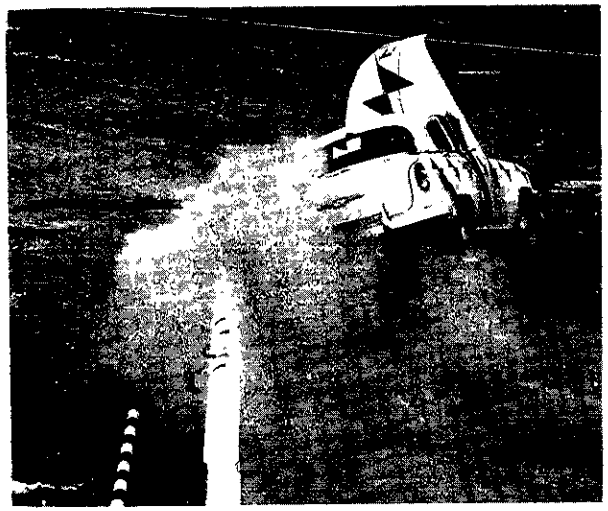

IMPACT +425 M SEC.

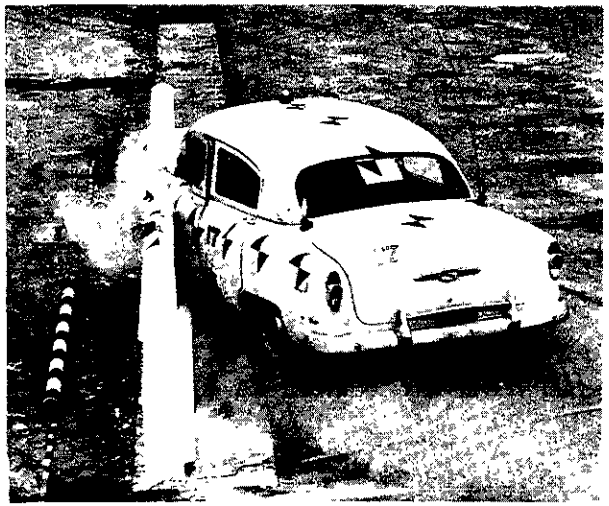

IMPACT + 75 M SEC.

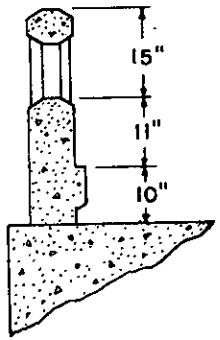

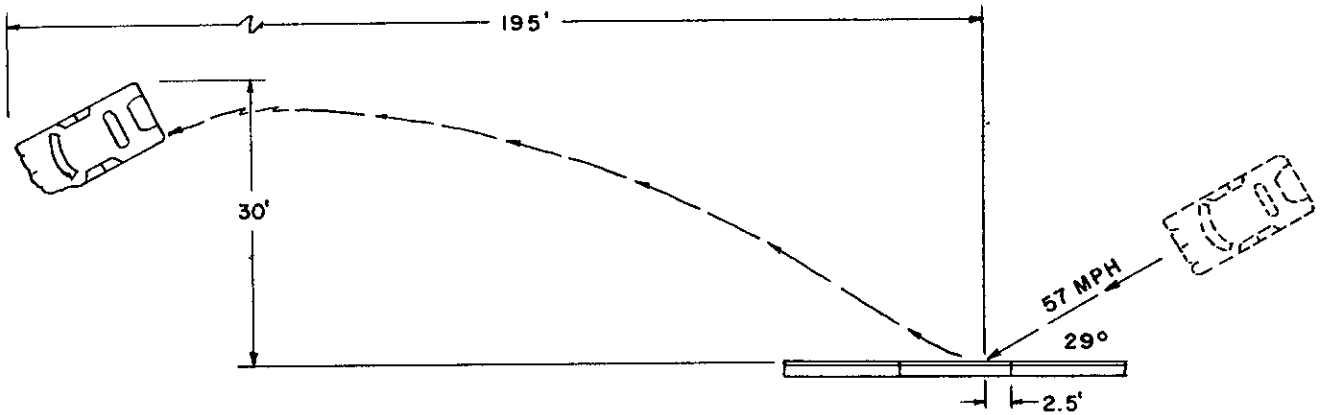

BRIDGE RAIL ..... Reinforced P.C.C.
LENGTH OF INSTALLATION .. 36'
GROUND CONDITION ..... Med. Wet

DUMMY INJURY ..... Severe left shoulder & side injuries. (Possible Fatality)
BRIDGE RAIL DAMAGE ..... Minor chipping & scratching.
VEHICLE DAMAGE ..... Total Loss
DUMMY DECELERATION (PEAK) .... Long. 26G ...Transv. 35G

TEST NO. 17
DATE 1-22-59
VEHICLE ..... Chev. 53 Sedan
SPEED ..... 57 MPH
IMPACT ANGLE .... 29°
VEHICLE WEIGHT ... 3700
(W/DUMMY & INSTRUMENTATION)

STATE OF CALIFORNIA DIVISION OF HIGHWAYS MATERIALS & RESEARCH DEPT.

1959 MEDIAN BARRIER & BRIDGE RAIL IMPACT TESTS

EXHIBIT 7

Clib.PDF - www.fastio.com

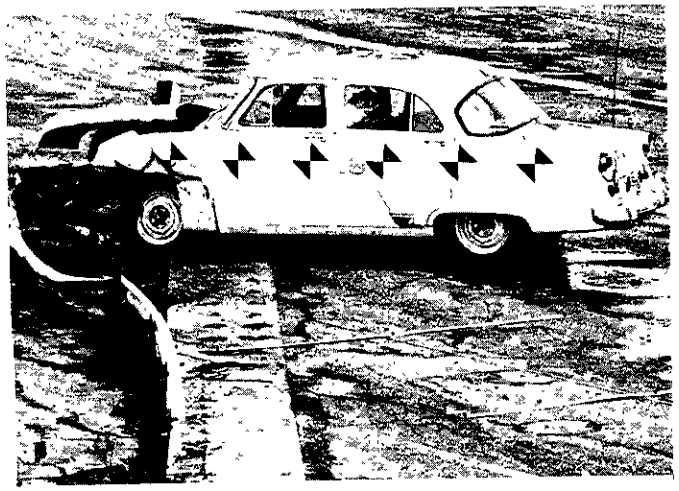

POST IMPACT

IMPACT + 500 M SEC.

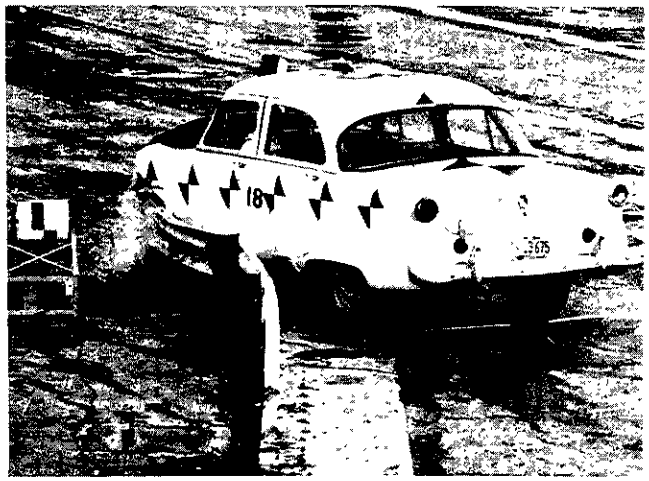

IMPACT + 100 M SEC.

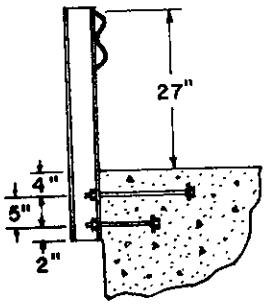

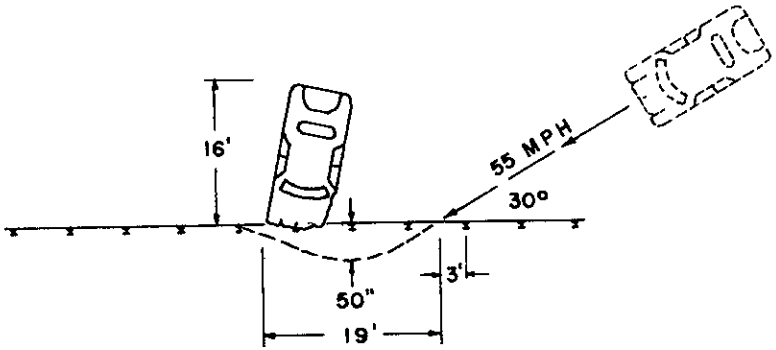

BRIDGE RAIL	Single W Section	DUMMY INJURY	Severe head & shoulder injuries.	TEST NO.	18
BRACKET	None	BRIDGE RAIL DAMAGE	3 Sections damaged beyond repair.	DATE	2-11-59
POST	6" WF 15.5 #	POST DAMAGE	5 Posts damaged beyond repair	VEHICLE	Ford 52 Sedan
POST SPACING	6'-3" O.C.	VEHICLE DAMAGE	Total Loss	SPEED	55 MPH
LENGTH OF INSTALLATION	62.5'	MAX. DYNAMIC DEFLECTION OF RAIL	60"	IMPACT ANGLE	30°
GROUND CONDITION	Wet	DUMMY DECELERATION (PEAK)	Long. 19G ... Transv. 7.1G	VEHICLE WEIGHT (W/DUMMY & INSTRUMENTATION)	4000

STATE OF CALIFORNIA DIVISION OF HIGHWAYS MATERIALS & RESEARCH DEPT.

1959 MEDIAN BARRIER & BRIDGE RAIL IMPACT TESTS

EXHIBIT 8

Clib.PDF - www.fastio.com

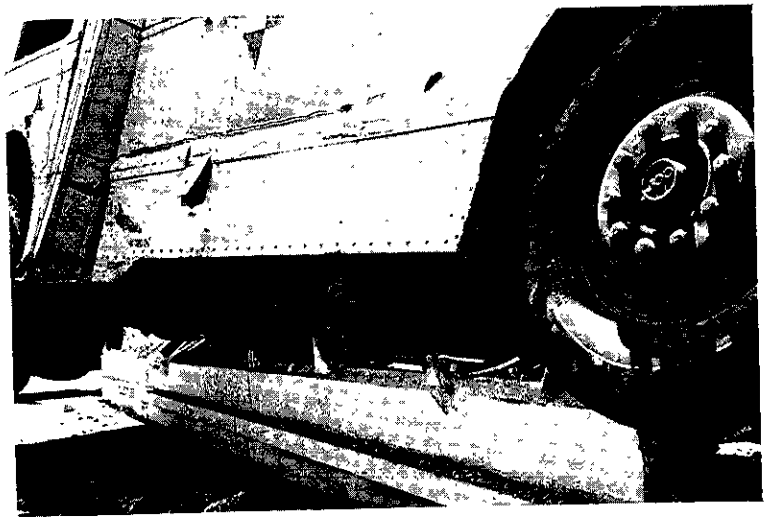

BRIDGE RAIL & BUS (FRONT VIEW)

POST IMPACT

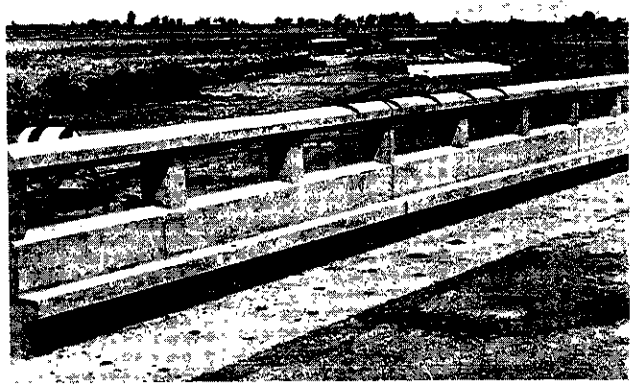

BRIDGE RAIL INSTALLATION

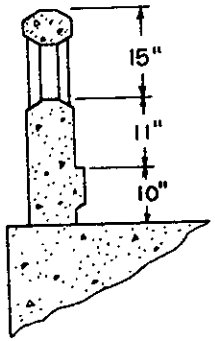

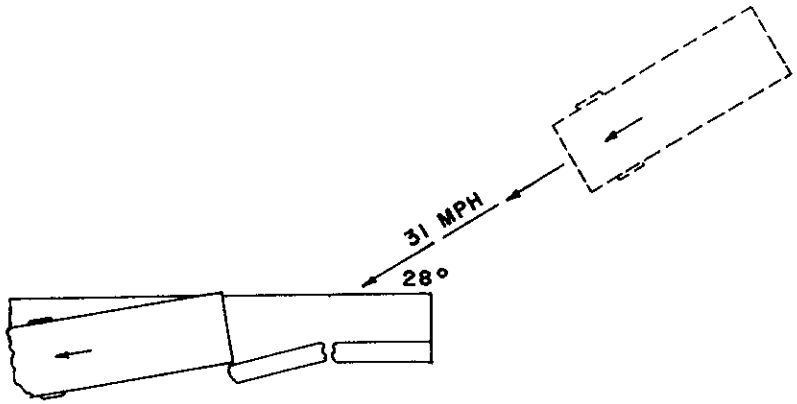

BRIDGE RAIL ..... Reinforced P.C.C.
LENGTH OF INSTALLATION ... 36'
GROUND CONDITION ..... Dry

DUMMY INJURY ..... Severe head, left shoulder & side injuries.
BRIDGE RAIL DAMAGE ..... 32' demolished
VEHICLE DAMAGE ..... Total loss

TEST NO. 25
DATE 7-30-59
VEHICLE ..... ACF 34 Pass. Bus
SPEED ..... 31 MPH
IMPACT ANGLE .... 28°
VEHICLE WEIGHT ... 17500

STATE OF CALIFORNIA DIVISION OF HIGHWAYS MATERIALS & RESEARCH DEPT.

1959 MEDIAN BARRIER & BRIDGE RAIL IMPACT TESTS

EXHIBIT 9

Clib.PDF — www.fastio.com

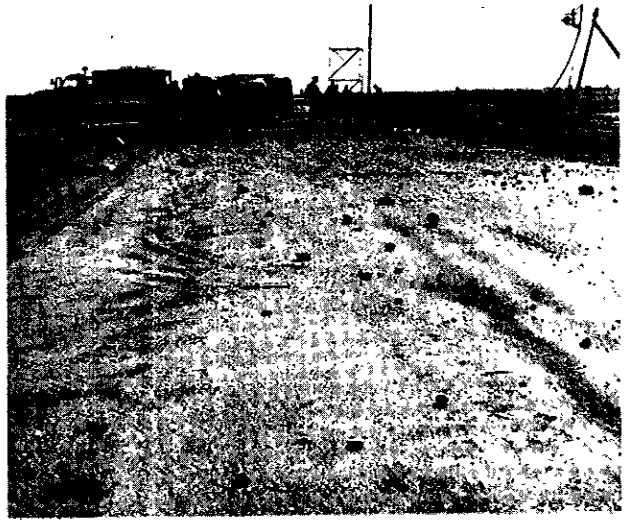

Post impact view showing scatter pattern of broken concrete rail section.

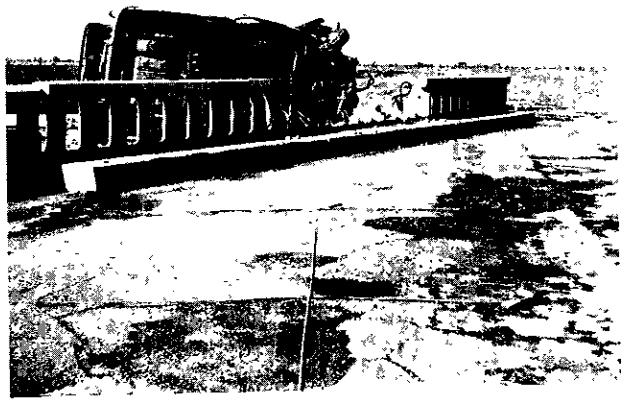

View showing post impact position of vehicle and extent of rail damage.

ClibPDF - www.fastio.com

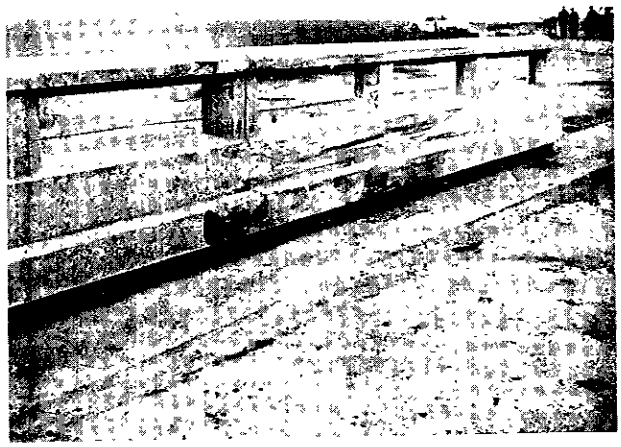

View showing damage to rail and post impact position of vehicle.

View showing damage to vehicle.

ClibPDF - www.fastio.com

View showing vehicle damage.

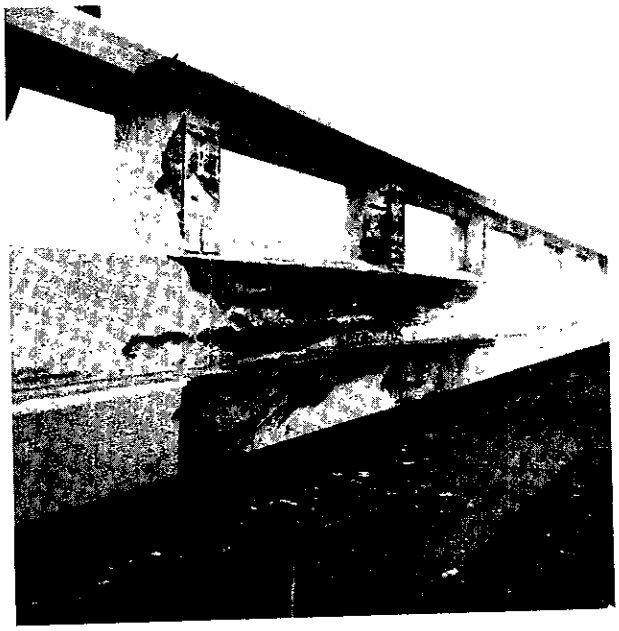

Front view showing damage to rail. Point of impact at keyed expansion joint.

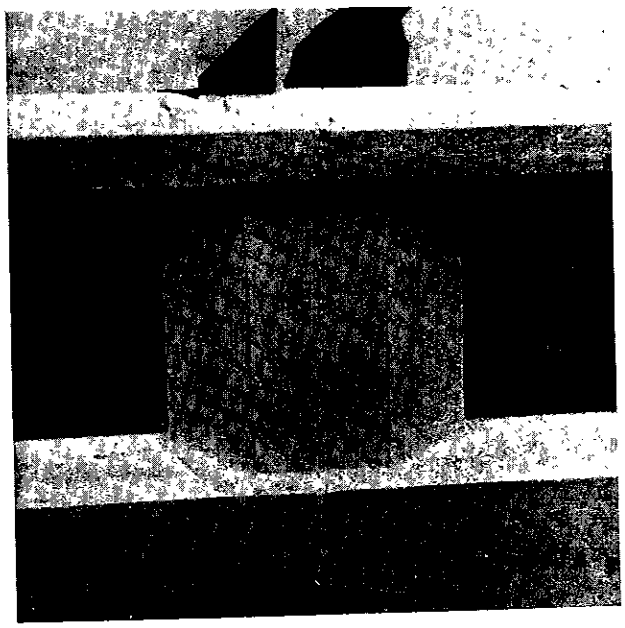

Rear view showing hair line crack at keyed expansion joint after two collisions.

ClibPDF - www.fastio.com

Post impact view showing spalling of bridge deck around anchor bolts.

View showing damage to bridge rail, posts, and vehicle.

ClibPDF - www.fastio.com

Two views showing bridge rail and bus damage.

ClibPDF - www.fastio.com