STATE OF CALIFORNIA
DEPARTMENT OF TRANSPORTATION
DIVISION OF NEW TECHNOLOGY,
TRANSPORTATION MATERIALS AND RESEARCH
OFFICE OF TRANSPORTATION MATERIALS
AND RESEARCH

EVALUATION OF COMPUTER HARDWARE AND HIGH-LEVEL LANGUAGE SOFTWARE FOR FIELD TRAFFIC CONTROL

PRINCIPAL INVESTIGATOR.....LES KUBEL, P.E.

CO-INVESTIGATOR.....LARRY WELSH, P.E.

CO-INVESTIGATOR.....THERESA QUINLAN

REPORT PREPARED BY.....THERESA QUINLAN

EARL SHIRLEY, P.E.
Chief, Division of New Technology, Transportation
Materials and Research

89-13

ClibPDF - www.fastio.com

83-13

ClibPDF - www.fastio.com

1. REPORT NO.	2. GOVERNMENT ACCESSION NO.	3. RECIPIENT'S CATALOG NO.
FHWA/CA/TL-89/13		

4. TITLE AND SUBTITLE	5. REPORT DATE
Evaluation of Computer Hardware and High-Level Language Software for Field Traffic Control	December 1989
	6. PERFORMING ORGANIZATION CODE
7. AUTHOR(S)	8. PERFORMING ORGANIZATION REPORT NO.
Theresa Quinlan	637369
9. PERFORMING ORGANIZATION NAME AND ADDRESS	10. WORK UNIT NO.
Office of Transportation Materials and Research California Department of Transportation Sacramento, CA 95819	11. CONTRACT OR GRANT NO.
	F89TL06
12. SPONSORING AGENCY NAME AND ADDRESS	13. TYPE OF REPORT & PERIOD COVERED
California Department of Transportation Sacramento, CA 95807	Final
	14. SPONSORING AGENCY CODE

15. SUPPLEMENTARY NOTES

This study was conducted in cooperation with the U.S. Department of Transportation, Federal Highway Administration.

16. ABSTRACT

In an attempt to reduce traffic congestion sophisticated traffic control systems are required to collect and manipulate a variety of real-time traffic data. This report presents an evaluation of computer hardware and high-level language software used in such traffic control systems.

Trade-offs which will help determine the value of designing and implementing an advanced transportation controller are identified.

An investigation of CALTRANS' future controller needs is presented.

Existing advanced controller applications and their associated hardware and software are analyzed.

17. KEY WORDS	18. DISTRIBUTION STATEMENT
Field Traffic Control, Computerized Traffic Control, Transportation Controller, Traffic Controller	No restrictions. This document is available to the public through the National Technical Information Service, Springfield, VA 22161

19. SECURITY CLASSIF. (OF THIS REPORT)	20. SECURITY CLASSIF. (OF THIS PAGE)	21. NO. OF PAGES	22. PRICE
Unclassified	Unclassified	56	

DS-TL-1242 (Rev.6/76)

ClibPDF - www.fastio.com

ClibPDF - www.fastio.com

* * NOTICE* *

The contents of this report reflect the views of the Office of Transportation Materials and Research which is responsible for the facts and accuracy of the data presented herein. The contents do not necessarily reflect the official views or policies of the State of California or the Federal Highway Administration. This report does not constitute a standard, specification, or regulation.

Neither the State of California nor the United States Government endorse products or manufacturers. Trade or manufacturers' names appear herein only because they are considered essential to the contents of this document.

ClibPDF - www.fastio.com

ClibPDF - www.fastio.com

CONVERSION FACTORS

English to Metric System (SI) of Measurement

Quality	English unit	Multiply by	To get metric equivalent
Length	inches (in)or(")	25.40	millimetres (mm)
		.02540	metres (m)
	feet (ft)or(')	.3048	metres (m)
	miles (mi)	1.609	kilometres (km)
Area	square inches (in^2)	6.432×10^{-4}	square metres (m^2)
	square feet (ft^2)	.09290	square metres (m^2)
	acres	.4047	hectares (ha)
Volume	gallons (gal)	3.785	litre (l)
	cubic feet (ft^3)	.02832	cubic metres (m^3)
	cubic yards (yd^3)	.7646	cubic metres (m^3)
Volume/Time (Flow)	cubic feet per second (ft^3/s	28.317	litres per second l/s)
	gallons per minute (gal/min)	.06309	litres per second (l/s)
Mass	pounds (lb)	.4536	kilograms (kg)
Velocity	miles per hour (mph)	.4470	metres per second (m/s)
	feet per second (fps)	.3048	metres per second (m/s)
Acceleration	feet per second squared (ft/s^2)	.3048	metres per second squared (m/s^2)
	acceleration due to force of gravity (G) (ft/s^2)	9.807	metres per second squared (m/s^2)
Density	(lb/ft^3)	16.02	kilograms per cubic metre (kg/m^3)
Force	pounds (lbs)	4.448	newtons (N)
	(1000 lbs) kips	4448	newtons (N)
Thermal Energy	British thermal unit (BTU)	1055	joules (J)
Mechanical Energy	foot-pounds (ft-lb)	1.356	joules (J)
	foot-kips (ft-k)	1356	joules (J)
Bending Moment or Torque	inch-pounds (in-lbs)	.1130	newton-metres (Nm)
	foot-pounds (ft-lbs)	1.356	newton-metres (Nm)
Pressure	pounds per square inch (psi)	6895	pascals (Pa)
	pounds per square foot (psf)	47.88	pascals (Pa)
Stress Intensity	kips per square inch square root inch (ksi$\sqrt{in}$)	1.0988	mega pascals$\sqrt{metre}$ (MPa $\sqrt{m}$)
	pounds per square inch square root inch (psi$\sqrt{in}$)	1.0988	kilo pascals$\sqrt{metre}$ (KPa $\sqrt{m}$)
Plane Angle	degrees (°)	0.0175	radians (rad)
Temperature	degrees fahrenheit (F)	$\frac{+F - 32}{1.8} = +C$	degrees celsius (°C)
Concentration	parts per million (ppm)	1	milligrams per kilogram (mg/kg)

ClibPDF - www.fastio.com

ClibPDF - www.fastio.com

* * ACKNOWLEDGEMENTS * *

The information contained herein was gathered as part of Federal Research Project No. F89TL06 titled "Evaluation of Computer Hardware and High-Level Language Software for Field Traffic Control". This research was conducted in cooperation with the Federal Highway Administration and is authorized under work program HPR-PR-0010(00).

Special thanks to all those who gave their time and effort to further this research endeavor. This includes numerous CALTRANS engineers, maintenance and operations personnel, and other experts who so graciously participated in the interview process. Also, special thanks to the City of Los Angeles Department of Transportation, BiTrans Systems Inc., and Arrow Electronics Inc.

ClibPDF - www.fastio.com

ClibPDF - www.fastio.com

* * TABLE OF CONTENTS * *

	PAGE
I. Introduction	1
II. Conclusions and Recommendations	2
A. Needs Evaluation	2
B. Hardware and Software Overview	3
C. Trade-off Analysis	3
III. Implementation	5
IV. Technical Discussions	7
A. Needs Evaluation	8
1. Experimental Design	8
2. Conduct of Experiment	10
3. Data Analysis	15
B. Hardware and Software	19
1. Background	19
2. Basic System Concepts	21
3. Existing Custom Traffic Control Systems	34
C. Trade-off Analysis	39
1. Alternatives	40
a. Modify current standard traffic control equipment as necessary	39
b. Design and implement application-specific custom controllers	42
c. Design and implement a new standard for advanced applications	44
2. Summary	47
V. Acronyms	48
VI. References	48
VII. Bibliography	49

ClibPDF - www.fastio.com

ClibPDF - www.fastio.com

* * TABLES AND FIGURES * *

TABLES		PAGE
Table 1	Traffic Control Equipment Alternative Analysis Summary	4
Table 2	Areas Targeted in Statewide Interviews	9
Table 3	Interview Questionnaire	11
Table 4	Microprocessor Evaluation Checklist	22
Table 5	Weigh-In-Motion Data	36
Table 6	Existing Nonstandard Control System Hardware Summary	39
Table 7	Traffic Control Equipment Analysis Summary	47
FIGURES		
Figure 1	Interview Text-File Example One	14
Figure 2	Interview Text-File Example Two	15
Figure 3	Advanced Traffic Control Interview Results	18
Figure 4	Current Equipment Limitations Interview Results	19
Figure 5	Controller Unit Block Diagram	20
Figure 6	Microprocessor Evolution	23
Figure 7	Real-Time Bus system	26
Figure 8	IEEE Standard 32-bit Buses	27
Figure 9	Operating System Hierarchy	32
Figure 10	San Francisco/Oakland Bay Bridge TMS Block Diagram	34
Figure 11	HOV Reversible Lane System Block Diagram	38
Figure 12	Proposed Advanced Transportation Controller Hierarchy of Standardization	45

ClibPDF - www.fastio.com

ClibPDF - www.fastio.com

* * INTRODUCTION * *

Overview and Organization:

This report presents an evaluation of computer hardware and high-level language software for field traffic control. Emphasis is placed on an investigation of CALTRANS' future traffic control needs. Technical aspects of system hardware and software are studied. Trade-offs which will help determine the value of designing and implementing an advanced transportation controller are also identified.

The report is organized into three specific sections, a Needs Evaluation, Hardware and Software Overview, and a Trade-off Analysis. The conclusions and recommendations address all three sections and provide detailed statements on research findings. An implementation section offers immediate practical application of the research findings.

Background:

Advanced transportation control and surveillance systems require hardware and software with superior capabilities. Although the current standard controller has proven to be a very reliable and capable machine, it was designed for basic traffic control operations and does not possess the power and speed necessary to implement advanced traffic management algorithms in a timely and cost effective manner.

The first objective of this project was to identify CALTRANS' overall traffic control requirements and the need for an advanced transportation controller. The second objective was to study current hardware and software technologies for advanced real-time traffic control systems. And the third and final objective was to determine trade-offs involved in designing and implementing an additional standard controller.

ClibPDF - www.fastio.com

ClibPDF - www.fastio.com

* * CONCLUSIONS AND RECOMMENDATIONS * *

Three distinct conclusions resulted from this research. They include:

1) There is an explicit need for advanced transportation control equipment.

2) Today's high performance control hardware and software is well suited for modern traffic management strategies.

3) The benefits of designing and implementing an advanced transportation controller standard are significant.

These statements are based on relationships uncovered in the Needs Evaluation, Hardware and Software Overview, and Trade-off analysis. Conclusions from each section are addressed below.

II.A. Needs Evaluation:

The conclusions presented in this section stem from a series of comprehensive interviews conducted throughout the state. The objective of each interview was to determine future controller needs and current controller limitations when applied to advanced applications. To achieve this, many different functional areas within CALTRANS and other public and private agencies were targeted for interviews. Persons responsible for operations, engineering, research, development, instrumentation, testing, and maintenance were contacted. The following statements summarize interview results.

Numerous projects, both proposed and operational, require the use of sophisticated microprocessor-based real-time control equipment. Some applications specify custom proprietary equipment, while others employ modified standard controllers, yet others call for custom state-of-the-art equipment. No uniformity exists from controller to controller.

Several applications requiring the use of advanced control equipment are felt to play a significant role in traffic management. Over 90% of the people interviewed indicated that they were currently involved with, or plan to become involved with, some form of incident detection. And more than 78% of those interviewed listed communications and networking as very important issues.

ClibPDF - www.fastio.com

Certain equipment limitations are restricting advanced application designs. Nearly 75% of the respondents rated current equipment input/output restrictions as significant. Inadequate serial communication capabilities also ranked as a significant problem with over 78% of the people interviewed.

II.B. Hardware and Software Overview:

In the past thirteen years since the design and installation of the current standard controller, major advancements have taken place in real-time control technology. These advancements may contribute significantly in the effort to reduce traffic congestion. This section addressed hardware and software technology and system design considerations.

New high performance microprocessor systems are well suited for advanced real-time control applications. The new 16- and 32-bit processor control systems excel in speed, memory, flexibility, and industry support.

Equipment supporting industry standards is more desirable than nonstandardized equipment. Use of state-of-the-art standardized equipment ensures orderly hardware and software changes and customization, provides lab and field hardened devices, complies with industry accepted communications protocols, offers strong industry backing, and superior product availability.

Use of a standard, widely accepted, high-level language, is desirable. English-like high-level languages permit easy migration from one processor to another, offer superior system development tools, and dramatically reduce program complexity, and consequently programming time and expense .

Use of operating system software is desirable for large-scale multiuser systems. An operating system acts as a mediator between the control equipment and its user. It promotes smooth system operation and coordination, relatively simple technology transfer, and overall system efficiency.

II.C. Trade-off Analysis:

This section evaluated three possible alternatives to satisfy the need for advanced control equipment.

These included: A) modify current standard traffic control equipment

ClibPDF - www.fastio.com

as necessary; B) design and implement application specific custom controllers; C) design and implement a new standard for advanced control applications. The table below lists the results of the analysis section. A description of advantages and disadvantages of each alternative is supplied in the technical discussion.

TABLE 1 Traffic Control Equipment Alternative Analysis Summary

	ALTERNATIVE A (Modify current standard)	ALTERNATIVE B (New custom controllers)	ALTERNATIVE C (New standard controller)
COMPLIES WITH INDUSTRY STANDARDS	FAIR	FAIR	GOOD
INDUSTRY SUPPORT	FAIR	FAIR	GOOD
EQUIPMENT DESIGN	FAIR	GOOD	GOOD
TECHNOLOGY TRANSFER	GOOD	POOR	FAIR
RELIABILITY	FAIR	FAIR	GOOD
STATE EXPERTISE	GOOD	FAIR	FAIR
USER FRIENDLY	POOR	FAIR	GOOD
DEVELOPMENT TOOLS	POOR	FAIR	GOOD
START-UP COST	GOOD	FAIR	FAIR
ANNUAL COST	FAIR	FAIR	GOOD

ClibPDF - www.fastio.com

Trade-off analysis conclusions:

Modifications to standard equipment result in functional and operational problems. Some of the current standard equipment is suffering from modifications made to accommodate changes in basic traffic control operations. More sophisticated modifications, required by advanced control applications, would undoubtably present severe complications.

Design and implementation of application-specific controllers does not support standardization. Although application-specific equipment may provide very capable designs, it can not offer functional or operational uniformity from one system to the next. Technology transfer would be difficult, as it would not be possible to "train the trainers" because each custom system would require custom training. Further, system hardware would not be interchangeable with other CALTRANS equipment.

Design and implementation of an advanced transportation controller is most desirable. As outlined in the list of advantages and disadvantages, such a controller would provide standardization and a design capable of supporting sophisticated traffic control applications into the 21st century.

Based on the research findings, it is recommended that work begin on an advanced transportation control equipment specification. This standard should support state-of-the-art control industry technology as described in the hardware and software overview section. In order to accommodate the numerous upcoming traffic operation centers and their sophisticated control system designs, it is crucial that work begin on this standard as soon as possible.

* * IMPLEMENTATION * *

Results of this research will aid in the design and implementation of an advanced transportation controller. All documentation and related information will be distributed to appropriate CALTRANS headquarters and district personnel and other agencies.

Research data and conclusions were presented to CALTRANS electrical maintenance personnel at the annual maintenance meeting. Research findings were also discussed with vendors from the control equipment industry. These vendors have proposed a cooperative meeting between competing manufacturers/vendors which will aid state personnel in the system design and decision making process.

ClibPDF - www.fastio.com

Recommended Procedure for Further Implementation:

1) A design team should be organized.

2) CALTRANS personnel and other control industry experts should join together to discuss hardware and software considerations.

3) A technology transfer process should begin with conferences which will accomplish the following:

   - Clarify the purpose of the advanced transportation equipment

   - Offer all state personnel involved in electrical systems an opportunity to provide input concerning design considerations.

   - Relate development schedules, project personnel, and funding information.

4) An advanced controller design should be generated.

5) A prototype unit and test method should be developed.

6) Standard specifications should be developed.

7) Demonstrations and seminars should be presented to state personnel implementing the system design.

ClibPDF - www.fastio.com

ClibPDF - www.fastio.com

* * TECHNICAL DISCUSSIONS * *

Principle and Approach:

As a result of California's increased traffic congestion, sophisticated traffic operation centers are being planned and built in major urban areas. These computer-based traffic control systems are designed to collect, monitor, and manipulate real-time traffic data. Devices such as changeable message signs, electronic vehicle detectors, closed circuit television, ramp meters, and highway advisory radios are all becoming common elements in today's control systems.

Tomorrow's systems promise to take us even further. Collision avoidance, electronic vehicle guidance, and roadway-to-vehicle communication are just a few examples of what the future will bring. In anticipation of such advances and changing traffic management techniques, CALTRANS must assess its future needs to adequately prepare for tomorrow's challenges.

Review of Previous Work:

To avoid repeating previous research or duplicating studies currently underway, a thorough investigation of related work was conducted. This review focused on both personal contacts and literature searches.

Personal Contacts:

This was a key element in the project. As mentioned previously, a statewide survey was conducted as part of the "Needs Evaluation". Numerous CALTRANS personnel, and public and private agencies were interviewed. Correspondence was maintained with Juan Morales, FHWA project monitor in Washington D.C., which provided up-to-date information on similar research projects. Much information was obtained from product shows and meetings with control industry vendors.

Literature Review:

A Transportation Research Information Service (TRIS) search disclosed related, but outdated, work. A few of these studies specifically addressed traffic-related microprocessor system design. These included a study conducted from 1976 to 1980 by New England Research

ClibPDF - www.fastio.com

Application Center, one performed by the World Road Congress in 1983, another by M.B. Mc Reynolds in 1978, and one by J.C. Lord and K.S. Kumar in 1976. The remainder of the literature was either very specific (i.e. component level information, discussed in hardware and software overview section), or extremely broad in scope (i.e. financial, environmental, and safety issues). All pertinent information is located in the bibliography and reference section.

IV.A. Needs Evaluation:

The first objective of this report was to determine current and future requirements in advanced control equipment. What are the current applications facing CALTRANS?. What equipment and software is being used to implement these applications? What applications are predicted for the future? What equipment limitations exist? What type of data will be of interest? How will the data be used? In what form, and by whom?

These and other related questions were addressed in a statewide survey. The following section contains detailed information on the design and implementation of the survey. A description of the data recorded, an example of how the data were analyzed, and a summary of the analysis are also provided.

Experimental Design:

Interviews, by nature, often produce vague and opinionated information. To reduce the risk of obtaining this type of data, careful steps were taken to help separate fact from opinion. This required an experimental design based on clearly defined research objectives and constraints.

The objective of each interview was to determine future controller needs and current controller limitations when applied to advanced applications.

Many different functional areas within CALTRANS were targeted in the interview process. Persons responsible for operations, engineering, research and development, instrumentation, testing, and maintenance were contacted. Several persons in each of the areas identified in Table 2 were contacted.

ClibPDF - www.fastio.com

Table 2. Areas Targeted in Statewide Interviews

CALTRANS

Headquarters:
- Division of Traffic Engineering
  - Office of Electrical Systems
    - Software Development and Traffic Control Systems
    - Hardware Development and Traffic Control Systems
  - Office of Traffic Data and Legal Services
    - Weigh-in-motion
- Division of New Technology, Transportation Materials and Research
  - Office of Transportation Materials and Research
    - Electrical Corrosion and Engineering Services
- Division of Highway Operations
  - Office of Traffic Operations
    - System Development
- Division of Highway Maintenance
  - Office of Highway Maintenance
    - Electrical Maintenance

District 03 - Marysville,
- Maintenance and Operations
  - Traffic Operations

District 04 - San Francisco,
- Operations and Toll Bridges
  - Traffic Operation Systems
  - Highway Operations
- Highway Maintenance
  - Electrical Maintenance

District 07 - Los Angeles,
- Operations
  - Traffic Systems (Including TOC)

District 11 - San Diego,
- Maintenance and Operations
  - Traffic Systems (Including HOV Reversible Lanes)

OTHERS

Los Angeles Department of Transportation (including ATSAC)
- Traffic Operations
- Maintenance

BiTran Systems, Inc., Sacramento, CA
- Custom Traffic Control Software

ClibPDF - www.fastio.com

Constraints:

Research constraints were also given careful consideration when designing the interview structure. Both practical constraints and variable factors required special attention. The number of interviews that could be conducted was dictated by practical constraints such as funding, available personnel, scheduling, and other logistics. To reduce the interviews to a reasonable number, and at the same time acquire the best possible data, some logistical assumptions were made. For example, because neither time nor budgeting would allow a visit to all maintenance supervisors in each district, regional electrical repair shops were contacted. By contacting the shops responsible for repair work in several districts, both time and money were conserved, while providing information on several districts. Similarly, Headquarters' neighboring Districts 03 and 04 were contacted for operations related interviews. District 04 is representative of a large district, while District 03 represents a medium sized district. Again, this reduced time and funds required, and helped to ease scheduling constraints.

Conduct of Experiment:

Procedure:

Initially a questionnaire was designed which addressed very specific topics. Each person was asked to run down a check list and mark appropriate boxes. Although this approach would have decreased the amount of time required for each interview, the detailed format was far too specific for the diverse group of disciplines we planned to contact. So, the questionnaire was dropped as a formal component of the interview and was used only as a guide in subsequent interviews. The questionnaire form is shown in Table 3 on the next two pages.

ClibPDF - www.fastio.com

Table 3. Interview Questionnaire

QUESTIONNAIRE

COMPUTER FIELD CONTROL NEEDS

Part I: Respondent Information

Name:_____ Address:_____

Title:_____ Telephone No:_____

Part II: Needs Evaluation

A. System Applications

(Check appropriate space)	Currently Employed	Under Research	Future Possibility	Not of Interest
1.Demand-responsive traffic control	___	___	___	___
2.Automated vehicles	___	___	___	___
3.Priority vehicle detection	___	___	___	___
4.Vehicle guidance	___	___	___	___
5.Vehicle classification	___	___	___	___
6.Electronic roadway information collection	___	___	___	___
7.Traffic modelling and simulation	___	___	___	___
8.Electronic snow and ice detection	___	___	___	___
9.Vehicle weigh-in-motion	___	___	___	___
10.Vehicle tracking	___	___	___	___
11.Vehicle identification	___	___	___	___
12.Roadway to emergency services communication	___	___	___	___
13.Oversized truck height detection	___	___	___	___
14.Electronic roadway warning signs	___	___	___	___
15.Traffic surveillance (headway , volume, speed monitoring)	___	___	___	___
16.Others (please specify)	___	___	___	___

Briefly describe system checked in first or second columns. Attach extra paper.

B. System Priorities
(Rank items listed below, 1= most important)

__Cost
__ Availability
__System expandability
__Security/Privacy
__Resource sharing
__Equipment location
__ Multivendor support
__Other (please specify)

C. Data Types

(Check appropriate space)	Currently Collected	Under Research	Future Possibility	Not of Interest

ClibPDF - www.fastio.com

Vehicle:

1.Size	___	___	___	___
2.Weight	___	___	___	___
3.Speed	___	___	___	___
4.Volume (flow)	___	___	___	___
5.Others (please specify)				

Road Surface:

1.Ice	___	___	___	___
2.Snow	___	___	___	___
4.Level	___	___	___	___
5.Texture	___	___	___	___
6.Damage	___	___	___	___
7.Others (please specify)				

Road Configuration:

1.Curves	___	___	___	___
2.Intersections	___	___	___	___
3.Bridges	___	___	___	___
4.Others (please specify)	___	___	___	___

Give brief description of items checked in first or second columns; Include minimum time required between data retrieval and technology used (inductive loop, Imaging–T.V., Infrared, radar, sonar ,etc.)

D. Communication Needs

(Check appropriate space)	Currently Employed	Under Research	Future Possibility	Not of Interest
Interconnected Devices:				
1.Computers	___	___	___	___
2.Telephones				
3.T.V. transmitters and receivers	___	___	___	___
4.Facsimile	___	___	___	___
5.Sensors	___	___	___	___
6.Peripheral devices	___	___	___	___
7.Others (please specify)	___	___	___	___
Geographic Scope:				
1.One room	___	___	___	___
2.Single building	___	___	___	___
3.Span of several buildings	___	___	___	___
4.Span of several miles	___	___	___	___

Give brief description of items checked in first or second columns; Include technologies used (modem, fiber optics, packet radio, etc.).

Priorities:
(Rank items listed below, 1= most important)

__Cost
__Transmission error rate
__Routing
__Standardized interface
__Transmission rate

Comments:
(Please describe your feelings on current needs and future potential of computer systems for field control)

ClibPDF - www.fastio.com

To achieve the most structured format possible, each interview followed the same process. Background information on the project scope and purpose was provided. Each person was asked to describe his or her area of responsibility in as much detail as possible. All questionnaire topics were addressed, and technologies, procedures, and projects relating to the subject's particular area of expertise were discussed. Finally each person was offered the opportunity to express feelings on trends in computer based traffic control.

A text file was created after each interview which summarized the data. Two such text files are shown in Figure 1 and 2. It should be noted that due to the diverse background of each individual interviewed, text files differed greatly. Figure 1, for example, depicts a text file that emphasizes current controller limitations, whereas Figure 2 emphasizes future applications.

==========

TEXT FILE NUMBER: 22.0

I. RESPONDENT INFORMATION

Name/Title: Date of Interview: February 23, 1989

Division/Office: Phone:

II. RESPONSE
A.Job Related Responsibilities

B.Field Traffic Control System

1.Limitations of current system

HARDWARE
Outdated components present availability problems. As parts become harder to find,their price goes up. Quality control also becomes a problem because fewer and fewer vendors manufacture and supply the necessary parts.

EXPANDABILITY
Upgrading memory to meet current needs takes space and requires "patching" the old system. For example, the 170's original program module consisted of a series of 2708 1k EPROMS (eight combined to make 8k of memory); this configuration was called the "PROM Module". Later this PROM module was replaced with the "412 PROM module", based on an 8k EPROM.Eventually, this module was expanded to accommodate a 16k and 32k EPROM resulting in the 412/128 and ultimately the 412C. Currently a 414 module has come into the picture, offering microprocessor control. Each of these modifications required considerable redesign as

ClibPDF - www.fastio.com

well as new specifications.
SOFTWARE--The low level assembly language is cumbersome and not user friendly.

EXPANDABILITY
Does not possess the I/O required for multi-intersection control or other advanced applications.

2.Applications (past,present,future)

Wide Area Detection (WAD)--Video processing, Roadway-to-vehicle communication, Ramp metering, changeable message signs, irrigation control, and Automated-vehicle-guidance all in one controller cabinet.

Multi-intersection controller with communication to local controllers via microwave and fiber optics.

3.Data Types

* Vehicle size, weight, speed, and traffic flow rate.
* Weather information (i.e. fog, snow, ice, and soil moisture content).
* Pollution levels

4.Data Use
Traffic Operation Centers

C. Recommendations

Need to make new equipment as similar as possible to the current 170 controller in appearance and "apparent"operation, for ease of conversion from maintenance personnel's point of view.Also, feels maintenance and operations people should be contacted for input on the subject.

==========

Figure 1 Interview Text-File - Example One

==========

==========

TEXT FILE NUMBER: 4.0

I. RESPONDENT INFORMATION

Name/Title: Date of Interview: March 15, 1989

Division/Office: Phone:

II. RESPONSE

ClibPDF - www.fastio.com

A.Job Related Responsibilities
B.Field Traffic Control System

1. Limitations
Low number of input paths, can't handle enough loops at intersections coordinated with on-ramp and off-ramp metering and extended main line metering

2. Applications (past,present,future)
SMART CORRIDOR-Traffic management and surveillance of 15 miles of Interstate 10, and 5 arterials consisting of 75 surface street miles. Several agencies are participating in this project, including the City of LA, LAPD, CHP, So. Cal. Regional Transit, and CALTRANS. The project is in the conceptual stage at this point. Private consultants are responsible for the system design. It is intended that 170 controllers be utilized in this project.
PATHFINDER -This project is in its infancy. The concept is based on some form of vehicle-to-roadway communication-
TRAFFIC OPERATION CENTERS (TOC) -The Request For Proposal has been set in motion.The TOCs will consist of, but are not limited to, CCTV, Changeable Message Signs,Highway Radio Advisory, communications network (to hand-off control from one locality to another) as well as for remote monitoring and other communications applications; fiber optics is expected to play a significant role in data transmission.

3. Data Types
Vehicle size, weight, speed, volume, headway, and other pertinent information.

4. Data Use
Traffic Management and surveillance byTOC and associated agencies will require data pertaining to vehicle classification, identification, and tracking, priority vehicle detection, and incident detection.

C. Recommendations

Contact consultants of ATSAC:
JHK & ASSO. (Jack Kay)
IMIS New York
Contact City of LA

==========

Figure 2. Interview Text File - Example Two

==========

Data Analysis:

After interviews were complete and all text files assembled, resulting data were reduced. Projects emphasized in text files are summarized on the next page.

ClibPDF - www.fastio.com

Smart Corridor (Smart Streets) - Traffic Management System on Santa Monica Freeway and five adjacent surface streets. Provides real-time traffic information collected by local traffic controllers and offers best course available to motorist via CMS, CCTV, HAR, and telephone (home/office/car). Coordinated ramp meters and signalized intersections are timed and adjusted to reflect traffic patterns.

Path Finder - This in-vehicle navigation system provides dynamic traffic data to TOCs and, in turn, receives real-time data, collected by local controllers and processed by the TOC computer. The vehicle simply sets its destination, then follows a series of maps as they appear on the display screen.

Automatic Vehicle Identification (AVI) - The AVI system automatically identifies autos for toll bridge fare collection. Toll booths on the Coronado Bridge in San Diego are equipped with microprocessor-based I.D. tag readers which detect tags carried by 1000 volunteer test cars. AVI is also found in the Crescent Study, a study of AVI and weigh-in-motion technologies in several western states.

Weigh in Motion (WIM) - Microprocessor control equipment and software are designed to collect, process, store, transmit (to host computer), and manipulate data related to the counting, classifying, and speed monitoring of all vehicles types, in addition to the weighing of buses and trucks. WIM is also found in Crescent Study.

Traffic Operation Centers (TOC) - Traffic surveillance and control centers are designed to rapidly detect and respond to highway incidents, manage resulting congestion, and provide general control and surveillance as necessary. Systems consist of a multitude of monitored locations (detectors fed to local traffic controllers), numerous CCTV and CMS units (CMS types are flip disk, fiber optic, and bulb matrix), microwave transmitters/receivers, display screens in control room, and main processing computers (LA-ModComp, and SFOBB-VME based machine).

Traffic Operation Systems (TOS) - TOS are large-scale traffic management systems dependent on interdistrict and local agency communication links. Traffic Operation Systems employ control and surveillance devices including: electronic vehicle detectors, CCTV, motorist call boxes, CMS, HAR, ramp metering, and appropriate communication links. Each device is tied to local traffic controllers. Communications include voice links between all centers, video imaging for traffic surveillance, communications for remote control of other TOC field equipment. Communication technologies employed allow for future system expansion.

ClibPDF - www.fastio.com

High Occupancy Vehicle Reversible Lanes (HOV) - CALTRANS' reversible HOV lanes are located on an eight mile stretch of Interstate 15 in District 11. The system allows vehicles with two or more passengers to enter specially designated lanes offering free flow travel during commute hours. This system consists of several traffic control computers which open and close barrier gates, raise and lower pop-up tubes, operate CMS, and gather data.

Automated Traffic Surveillance and Control (ATSAC) - This transportation management system monitors and controls an extensive network of computer-based signalized intersections. The system is designed to identify equipment malfunctions, adapt timing plans to fluctuations in traffic demand, and respond to accidents, construction obstructions, and other special one-time events. Extensive use of microprocessor based traffic controllers and loop detectors is employed. ATSAC also utilizes the FHWA UTCS enhanced software package, and Critical Intersection Control (CIC) computer networking. CCTV, fiber optic trunk communications, and color graphic control room displays complete the system.

Each of these projects calls for many different advanced technologies. For example, Southern California TOS's, in Districts 07, 08, 11, and 12, will employ electronic vehicle detectors, CCTV, motorist call boxes, CMS, HAR, ramp metering, and appropriate communication links. Specified communications include voice links between all centers, video imaging for traffic surveillance, communications for remote control of other centers' field equipment, and communication technologies allowing future system expansion.

Because these applications actually define future hardware and software requirements, and current hardware and software limitations, this specific application information was reduced further for additional analysis.

A matrix format was used which, for the future controller needs evaluation, listed applications versus person interviewed and, for the current limitations evaluation, listed equipment limitations versus person interviewed. After completing the first few lines of the matrix a pattern began to emerge. A specific group of applications seemed to rate as most important in terms of future potential to a large majority of the people. In fact, when the matrix was complete, over 90% of people interviewed had indicated they were currently involved with, or plan to become involved with, some form of incident detection. And more than 78% of those interviewed felt communications and networking was a very important issue.

ClibPDF - www.fastio.com

Similarly, several key areas surfaced concerning equipment limitations. Nearly 75% of the respondents rated present equipment input/output restrictions, when used in advanced technology applications, as significant. Inadequate high-speed serial communication capabilities also ranked high with 78% of the respondents. These and the rest of the interview application and limitation findings are summarized below in Figures 3 and 4.

Many of the limitations in Figure 4 seem to be proportional to applications shown in figure 3. For example, insufficient input/output is obviously a limiting factor in a complex network of controllers, detectors, and other peripherals. Referring back to the figures, networking and I/O were each felt to be significant concerns with over 70% of the respondents. And the lack of sufficient serial communications would all but eliminate the possibility of remote incident detection. These elements rate high on both graphs. So it may be safe to conclude, that as applications become more complex current equipment limitations become more significant.

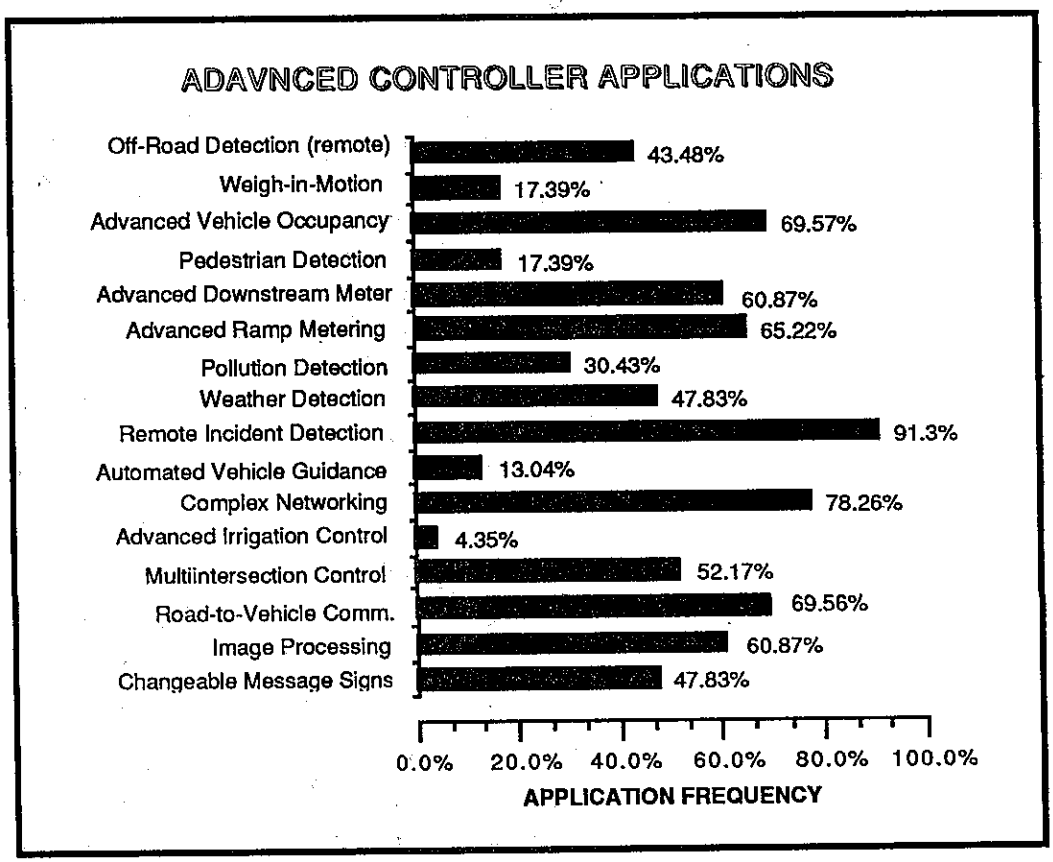

Figure 3. Advanced Traffic Control Application Interview Results

ClibPDF - www.fastio.com

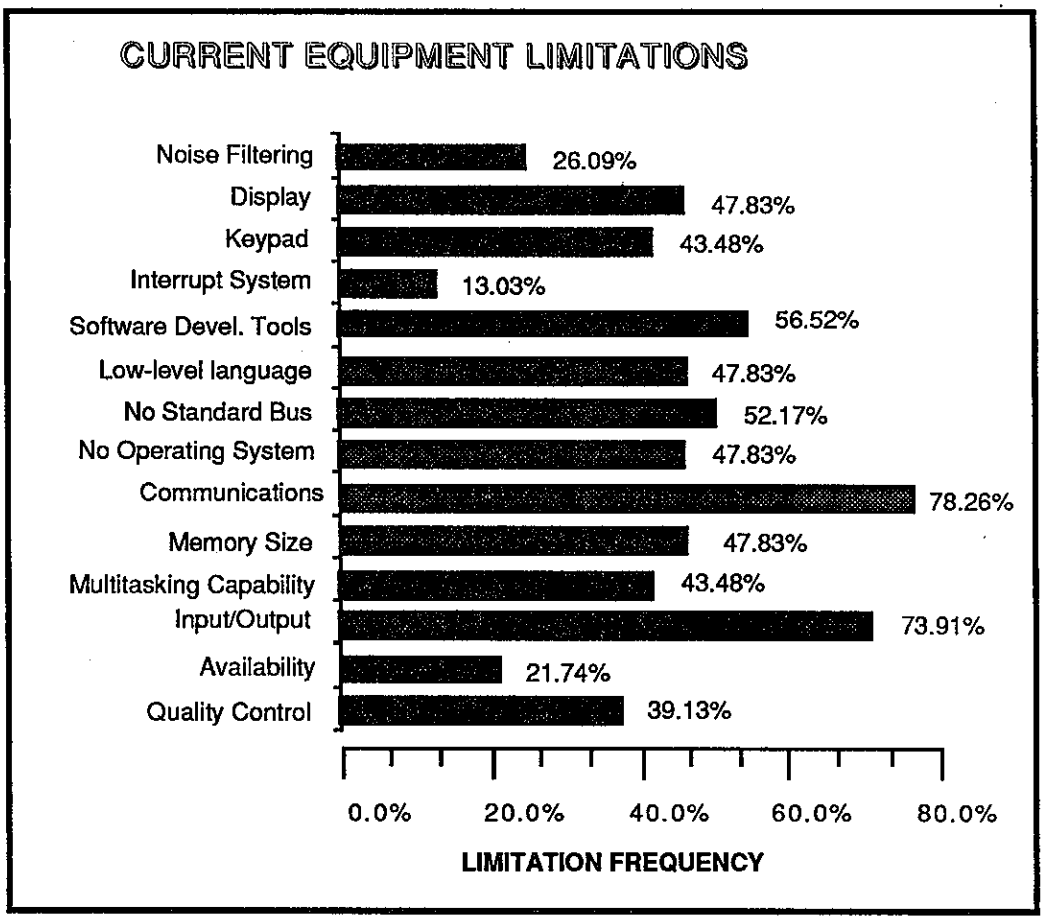

Figure 4. Current Equipment Limitations Interview Results

The next section provides examples of how this very relationship led to the design and implementation of custom traffic control systems employing nonstandard control equipment.

IV.B. Hardware and Software Overview:

Background:

CALTRANS operates thousands of microprocessor-based traffic signal controller units. These units function as stored program, digital microcomputers to provide programmed logic for traffic control (1). Currently, CALTRANS standard traffic control operations rely on the model 170 controller unit introduced in 1976. Each unit is composed of a case and plug-in printed circuit board modules (see Figure 5).

ClibPDF - www.fastio.com

CONTROLLER BLOCK DIAGRAM

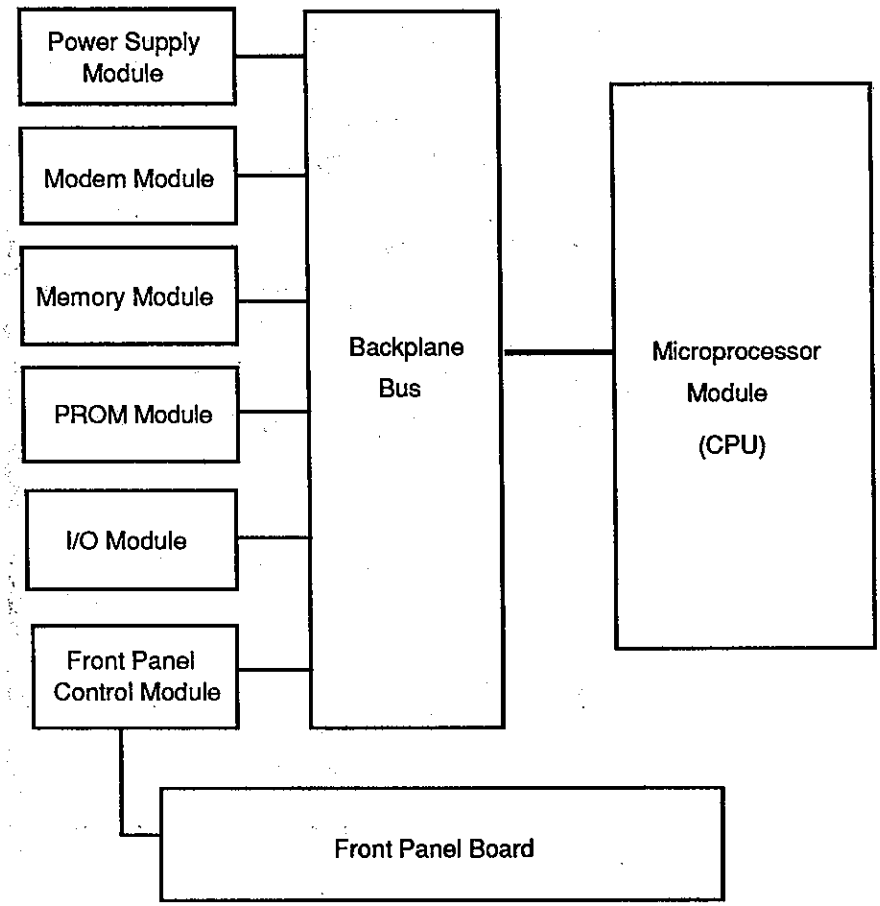

Figure 5. Controller Unit Block Diagram

Basic modules include Memory, CPU, I/O, Panel Control, PROM, Modem, and Power Supply. System performance can be significantly enhanced or limited by the choice of hardware and/or software.

CALTRANS' model 170 controller unit, with it's 6800 microprocessor-based hardware, is a proven success and has become a standard in field traffic control. The 170 unit was designed for use in hostile environments found in traffic applications. It operates as a fully vehicle-actuated, volume density , control unit with overlap phases and other services used in conjunction with traffic control (2). However, during the thirteen years since the design and installation of

ClibPDF - www.fastio.com

the controller, major advancements in microprocessor technology have taken place. These advancements can contribute significantly in the battle against traffic congestion. In fact, studies on serious urban traffic problems pay special attention to new possibilities provided by LSI (large scale integrated) electronic systems, "especially so-called minicomputers and microprocessors". Currently, countries all over the world are experimenting with state-of-the-art microprocessor technology in freeway surveillance systems, automated vehicles, priority vehicle detection, traffic modeling and simulation, vehicle classification and identification, snow and ice detection, over-height truck load detection, and so on. Because CALTRANS employs older traffic control technology, two problems result.

1) The older technology does not possess the power and speed required for some sophisticated traffic control applications.

2) Due to the popularity of the 170, emphasis has not been placed on keeping current with microprocessor technology.

These two problems will be addressed in this Hardware and Software Overview section. The overview provides information on computer-based control system concepts and trends, and investigates existing custom traffic control systems utilizing advanced technologies.

Basic System Concepts:

For many years traffic control was performed by electromechanical machines. Changing transportation technologies eventually led to the introduction of microprocessor-based controllers in the 1970's. Once again, the time has come to respond to changing traffic management strategies. Control features and functions now dictate which technological advancements are best suited for today's traffic systems. Although many different configurations are possible, most computer-based control systems rely on the same four functional components. These include microprocessor hardware, data bus hardware, high-level language software, and operating system software. The next sections describe each of these elements and offer information on technology trends.

Microprocessor Basics:

A microprocessor (MPU) can be defined as a single chip which performs the logical operations, computations, and control functions of a computer. Four of the most important considerations in judging the power of a microprocessor are: speed (the cycling rate at which instructions can be executed within the MPU), addressable memory

ClibPDF - www.fastio.com

(the maximum RAM size the MPU can access from a single state), instruction set (the number and complexity of instructions that can be invoked), and word width (the number of bits that a MPU can act on at any one time) (7).

From this it may seem reasonable to assume that a 16-bit processor is twice as powerful as an 8-bit processor, but this is not necessarily so; many other factors come into play. In an evaluation of a real-time transportation control system , vectored interrupts, priority levels, a large direct access addressing range, multiprocessing capabilities, bus arbitration techniques, and high-level development support are all essential considerations which must be taken into account. A general procedure to aid in such an evaluation is outlined below (7).

Table 4. Microprocessor Evaluation Checklist

One of the best ways to approach a microprocessor evaluation is to use a checklist. This list helps ensure that no key factors have been overlooked.

- General Description-How many bits? Resources? Clock rate? Modes of operation?
- Register organization-How many? Dedicated or general purpose? Treated as register pairs, quads?
- Stacks-How many? Dedicated?
- Refresh-Provisions for automatic refresh?
- Special registers-Types? How many?
- Interrupts and traps-Structure? How many of each? Vectored and/or nonvectored? Maskable or nonmaskable?
- Addressing range-Size? Segmented or nonsegmented? Size and number of segments?
- Addressing modes-How many types?
- Multi-processing-Available? How implemented?
- Instruction set-How many types? Regular or make- shift? Easily understood mnemonics?
- Development support-How much memory? Serial ports? Parallel ports? Expandable? Good documentation? Monitor supplied? Monitor listing available? Routine user callable? Full set of commands? Upload/Download capabilities?

There are essentially only three groups of MPU manufacturers, Intel, Motorola, and others (others, including Zilog's Z80 series, National Semiconductor's 16032, and Texas Instrument's TMS9900, have had little influence on the microprocessor market). Figure 6 depicts the evolution of some of Motorola's and Intel's MPU product line (8).

ClibPDF - www.fastio.com

MICROPROCESSOR EVOLUTION

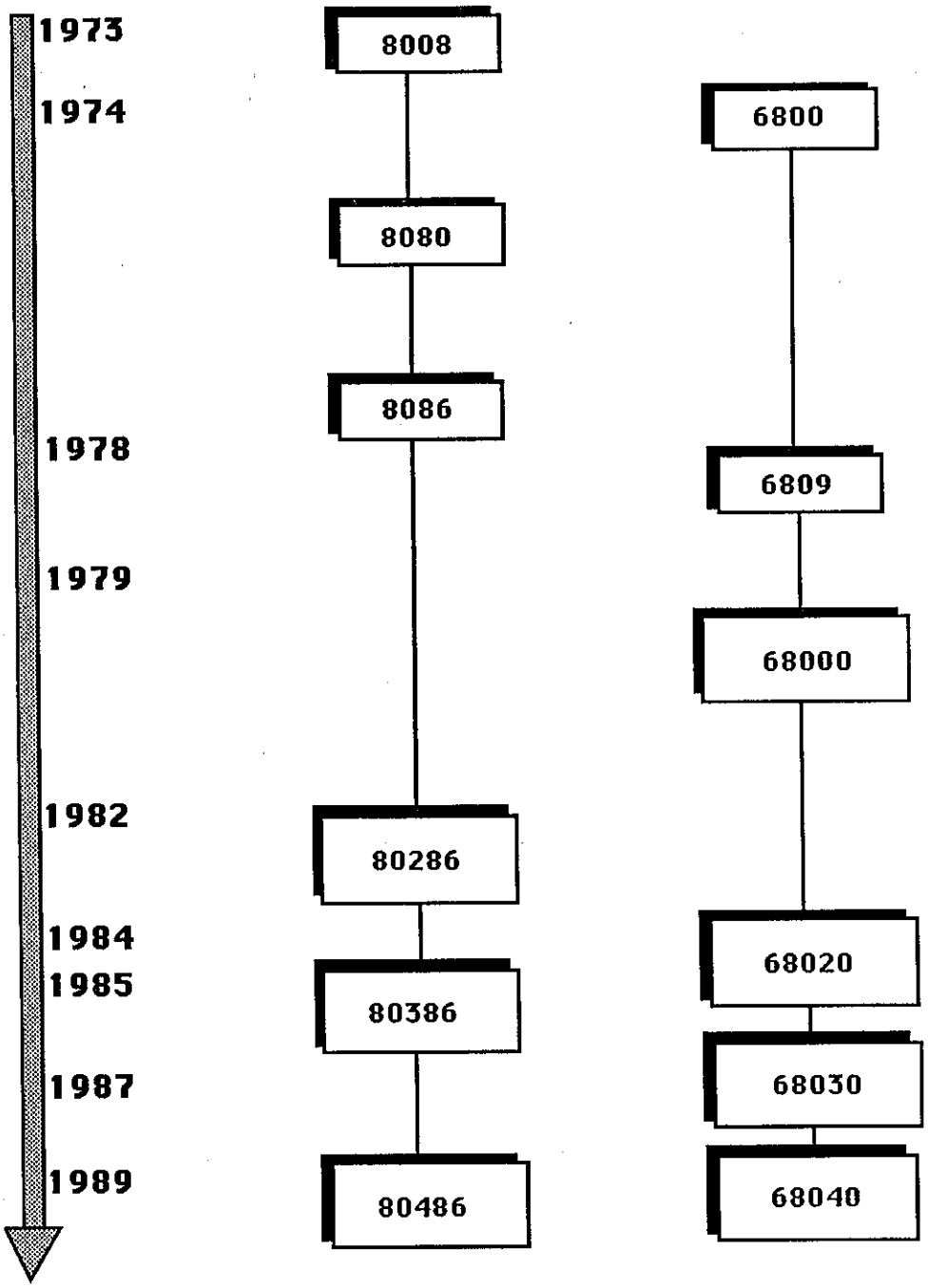

Figure 6. Microprocessor Evolution

ClibPDF - www.fastio.com

The latest devices shown in Figure 6 decrease the average number of clock cycles per instruction while maintaining compatibility with existing software.

This statement brings up a very important point, compatibility. As stated in a report on technology transfer, prepared by the University of Wisconsin, Office of Statewide Transportation Programs (5), " The new method or item must be easy to introduce... The more a new item is compatible with past procedures and techniques, the more likely the organization is to adopt it". In this case, it would be advantageous to continue with Motorola processors, as the current standard controller is designed around the Motorola 6800 chip. Even the 68000 series processors support coding that is compatible with older Motorola chips.

A move in the Motorola direction would offer immediate benefits in terms of employee training and overall acceptance. Many CALTRANS employees are experienced with Motorola's 6800 assembly code and peripheral support chips (memory, I/O, etc.).

Although the 8-bit 6800 processor is still a very capable chip, for today's applications, it presents numerous limitations. The 8-bit word width restricts the coding to 2^8 or 256 instructions (of which only 197 are available for use in the current standard controller). This makes the task of programming inefficient and time consuming (in terms of both machine and human time). For example, a simple multiplication operation requires several register shifts and additions. Where a 16-bit processor, capable of supporting 2^{16} or 65,536 instructions, offers a multiplication operation in its instruction set.

In general, the 16-bit processors excel in speed, memory, flexibility, and availability. These processors offer clock rates starting at 12 MHz (over 15 times faster than the current control unit's 756KHz rate), 16 Mbytes direct access addressing (over 256 times more than the 6800 MPU), and the 68000 offers two modes of operation, user and supervisory, with over 1000 instruction codes available for application programming and operating system use.

This fact is very important, as operating systems are becoming more desirable in today's advanced control systems. In order to exercise their full potential, these real-time multitasking operating systems require

ClibPDF - www.fastio.com

32-bit processors (8). In fact, many traffic control applications require fast MPU providing mini and mainframe compatibility, multiuser compatibility, processing power capable of supporting artificial intelligence, voice recognition, image processing, expert system programming, and much much more.

Data Bus Basics:

Real-time control systems are very fast. They must be as fast as the real world events to which they respond. These events often occur simultaneously and in an unpredictable order. External equipment such as vehicle detectors, control gates, warning lights, and surveillance cameras each demand specialized attention. The control system must respond with appropriate services in a predetermined period of time. Therefore, there are different amounts of data, traveling at different speeds, in an unpredictable sequence, with each requiring a different response. This is the essence of a real-time control system. And this requires the exceptional data flow management techniques found in today's data bus standards.

There are essentially three levels of data buses. On the high end of the performance (and cost) spectrum there are proprietary buses designed for super computer applications. In the middle, there are the 16- and 32-bit buses, which target microcomputers, and on the lower end of the spectrum, there are STD and PC type buses, which control standard performance processors. In general, the proprietary buses exceed requirements for traffic control applications, and low-end buses do not support multiprocessing and high-speed data transfer, which may be required for more advanced transportation control. The midrange buses may be most appropriate for todays traffic control environment.

Several bus standards now exist, with VME, Multibus II, Futurebus +, and NuBus, leading the way. Figure 7 below depicts a typical real-time bus system that might be implemented by any one of these standards (6).

ClibPDF - www.fastio.com

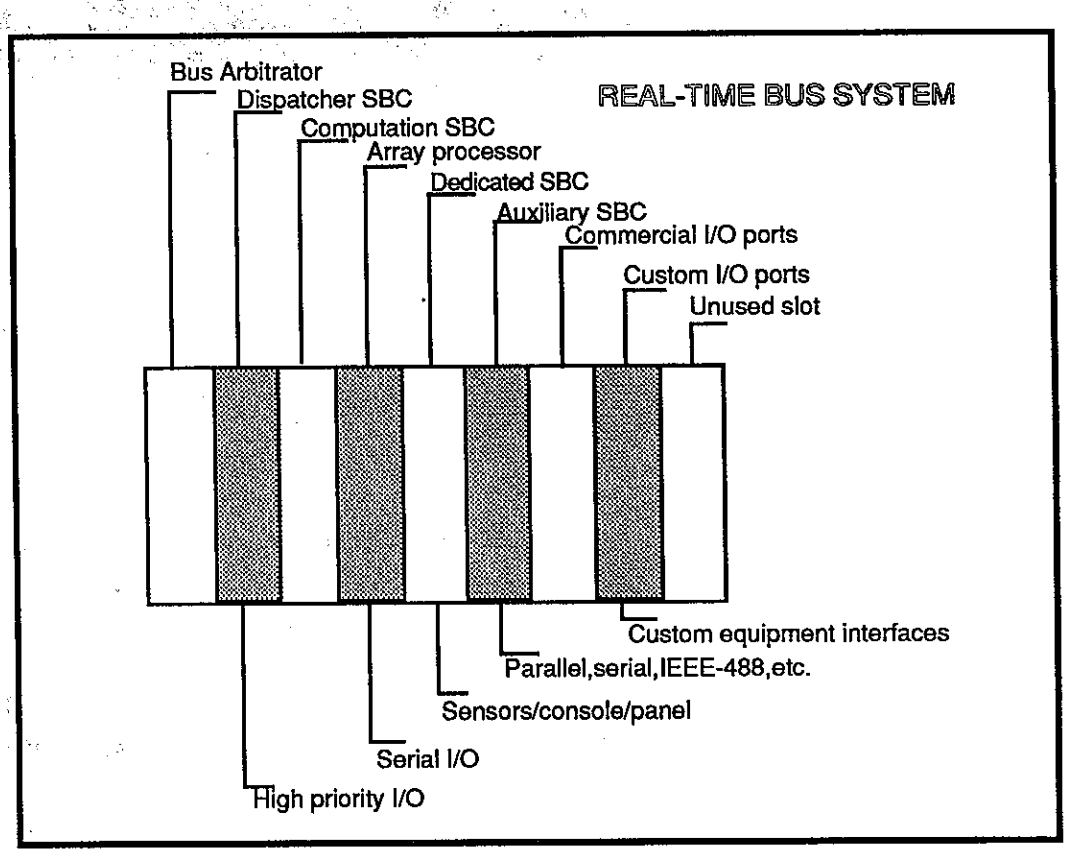

Figure 7. Real-Time Bus System

This figure demonstrates interconnection of a bus arbitrator board, several single-board computers (SBC), and several I/O boards. Here the bus arbitrator specifies a protocol for choosing a master board (the board that currently controls the bus) from many competing boards each seeking services (6). Although this is a typical configuration, the specifications may differ greatly from one standard to another.

Currently there are five 32-bit bus standards recognized by IEEE (12). These include: VME, NuBus, Multibus II, Futurebus +, SCI (Scalable Coherent Interface); others have not been recognized by IEEE. Basic characteristics for each bus are outlined in figure 8.

ClibPDF - www.fastio.com

IEEE Standard 32-bit Buses

Bus	IEEE Standard Number	Address Width (bits)	Data Width (bits)	Timing	Multiplexed Protocol?	Maximum Quoted Performance (Mbytes/s)
Earlier 32-bit						
VMEbus	P1014	16,32	16,32	Asynchro-nous	NO	40
NuBus	P1196	32	32	Synchro-nous	YES	37.5
Multibus II	P1296	32	16,32	Synchro-nous	YES	40
New 32-bit						
Futurebus +	P896.1	32,64	32,64 12,256	Asynchro-nous	YES	400(32-bits) 3200(256-bits)
Scalaable Coherent Interface (SCI)	P1596	64	64 (Logical) 16 (physical)	Not Yet Defined	YES	1000 per node

Source : IEEE Spectrum July 1989

Figure 8. IEEE Standard 32-bit Buses

The new 32-bit buses, Futurebus in particular, are much more capable, but in comparison, the more mature buses, such as VME, offer superior compatibility and industry support. Futurebus, for example, supports block transfers to RAM, cache memory (logic-controlled memory which retains recently accessed memory locations for repeated use), scalability (ability to support different bit width boards, i.e. 16, 32, 64, 128, and even 256), auto-configuring capabilities (ability to poll and identify connected boards and adjust configuration software automatically), and is microprocessor-independent (12).

But, even though the new 32 bit buses display enormous capabilities, they do not have firm industry backing. In a recent survey conducted by Computer Design Magazine (3), for real-time control VME was rated

ClibPDF - www.fastio.com

as number one by 48% of the respondents, followed by Multibus II with 14.7%, and NuBus with 5% of the vote; Futurebus did not rate. In multiprocessing applications, VME again ranked first with 42%, Multibus II came in second with 23.5%, and Nubus followed with 11.6% of the vote. Futurebus received the lowest rating with only 5.2% of the support.

The low ratings of the newest 32-bit buses may be due to the fact that they are relatively new and have not had time to build a following. Paul Borrill, chairman of the IEEE Futurebus committee, commented that the committee did not actively push for industry support until the Futurebus standard had been officially released, which wasn't until 1987. Nonetheless, a bus demonstrating tremendous future potential, but lacking industry support, could be risky for system designers.

High-Level Language Basics:

Programming languages can be very weak or extremely powerful. Before investigating the more powerful high-level languages, it will be beneficial to look at low-level forms of software.

Low-level assembly languages are closely related to machine code. All internal processes must be accounted for when writing in assembly. Assembly is more difficult to read because it is written more for the computer than the programmer. And it also can be more difficult to write because a tremendous amount of code is needed, even for very basic tasks (refer to the multiplication example in the microprocessor section). There are some high-level languages, however, that are just as cumbersome. One such language is COBOL, a business application language. This high-level language is verbose and requires many lines of code.

In general, high-level languages are not too different from the English language. It isn't necessary for the programmer to deal with machine-level tasks (10). For example, to print a message, a simple "PRINT" statement can be used, whereas in assembly, the data must be pulled from a location in memory, stored in a register in preparation for printing and, after printer controls are set, sent to the printer. Although the advantages of concise high-level languages are clear, low-level languages still play a very necessary role in computer control. In a real-time traffic control system, absolute control over addressing, I/O, and interrupts, is essential. This is particularly true in traffic control environments where numerous stand-alone products interface with the system.

ClibPDF - www.fastio.com

High-level languages can be broken down into several categories (10). These include; application languages, intended for business and science such as COBOL and FORTRAN, respectively; teaching languages, designed to teach computer programming such as BASIC and PASCAL; and system languages which create code for operating systems such as PL/M. There are a few other languages, however, that fall somewhere between the classic high-level and low-level language. C, the most widely used language today, is a good example of this type of language. It supports assembly level code, but also is able to perform high-level tasks. Lets look at a method for choosing the best programming language for a real-time traffic control system.

This process is not a simple one, as there are almost as many programming languages as there are programming applications. The intended application should be the first issue addressed in any software decision-making process. Both type and level of application must be considered.

Transportation systems call for real-time control requiring both assembly register-level access as well as high-level power. Therefore, a very high-level language that does not offer assembly code compatibility would not be appropriate. Also, traffic operation systems, such as those described in the Needs Evaluation section, are far too complex to attempt control with one "super program". Consequently, many smaller modules must be written to manage sections of the overall system. This requires a language that supports separate program module compilation. The use of numerous modules allows parallel development of different tasks within a large system and does not require that any one programmer have a complete understanding of the entire program.

Beyond the application issues there are feature considerations. Features are dictated by the original purpose for creating a program language (9). For this reason, it is a good idea to investigate the history of a candidate language. For example, based on their background, COBOL and APL are not suitable for real-time traffic control applications.

A particularly important feature for real-time control applications is data types. Transportation management techniques will certainly require the use of many forms of data, with just as many different ways to organize it. We will be interested in 8-, 16-, and 32-bit integers, bit fields (set of adjacent bits within one integer), arrays (a place where a set

ClibPDF - www.fastio.com

of stored data resides under a single name), single and double precision floating points (numbers with fractional parts), records/structures (data sets where individual data types are different), and even the option of user- definable data types.

Only this degree of data flexibility will offer the superior error checking capabilities, which are critical in real-time control applications. However, errors often occur because syntax is inconsistent. Syntax is a very important feature, which should be clean and concise. As mentioned previously, particularly verbose syntax can become very long and hard to follow.

Another important real-time consideration is structured programming techniques (9). Does the language offer grouping syntax (functions or procedures), multiple types of decision statements (IF,CASE,etc.),counted and uncounted loops, and exceptions or escapes from loops (BREAK) ? These features are found in languages like Ada, C, and Modula-2.

And perhaps the most pertinent concern in a large system designed to adapt to new technologies and changing trends in traffic management techniques, is the question of portability. Can the language be moved from one compiler to another and one microprocessor to another (same level/different manufacturer, or better yet, different level (8 bit to 32 bit)/different manufacturer)? With today's rapid technology growth, this type of system portability becomes a critical design factor.

Just as critical, is the question of how I/O is handled. With the variety of peripheral devices found in traffic management systems, device-independent I/O is essential. Languages that treat one input device differently than another become extremely difficult to program (9).

To achieve the simplest, yet most effective, programming possible, several practical questions must be answered. How difficult is the language to learn? How available (popular) is the language? How many hardware and software development tools are available? For example, an in-circuit emulator is an essential development tool. Debugging tools and libraries, supporting graphics and specialized real-time control routines are extremely important in the development process. Unfortunately, many languages don't allow expansion through libraries,. COBOL, FORTRAN, and PL/I, are examples of such static languages, whereas one of C's most powerful attributes is its easily created libraries.

ClibPDF - www.fastio.com

Now, reviewing the information presented thus far, we find that only a handful of languages appear appropriate for real-time traffic control applications. PL/I, COBOL, and APL, have all been ruled out as they are either nonstructured, static, or don't support real-time control applications in general. Of the remaining major languages, PASCAL, advanced versions of BASIC, and C, are the only serious contenders. The others, like FORTH (originally developed for high-speed control applications), may offer the programmer very capable hardware control, but lack any real industry support.

C, on the other hand, has been accepted as the standard programming language of the 1990's (4). According to PC Magazine, out of the top ten programs, only one package (Lotus 1-2-3) is not written in C; and the new release of that program will be in C. PC claims that none of the four major PC houses would consider purchasing a program written in BASIC. As for PASCAL, in an ideal world, it would be preferable over C for everything except large-scale programming projects. But, in reality, most programming experts use C. There are fewer new books on PASCAL than C, fewer toolboxes, and PASCAL is generally not a portable language. With this information in mind, one can only lean toward C as the best choice for today's real-time traffic control programming language.

Operating System Basics:

An operating system can be described as an organized collection of techniques and procedures used to control a microprocessor system and mediate between computer and user. Figure 9 below outlines the chain of control in a typical microprocessor-based control system (11). It can be seen that the operating system falls between the hardware and application and systems software levels, two concepts already covered.

ClibPDF - www.fastio.com

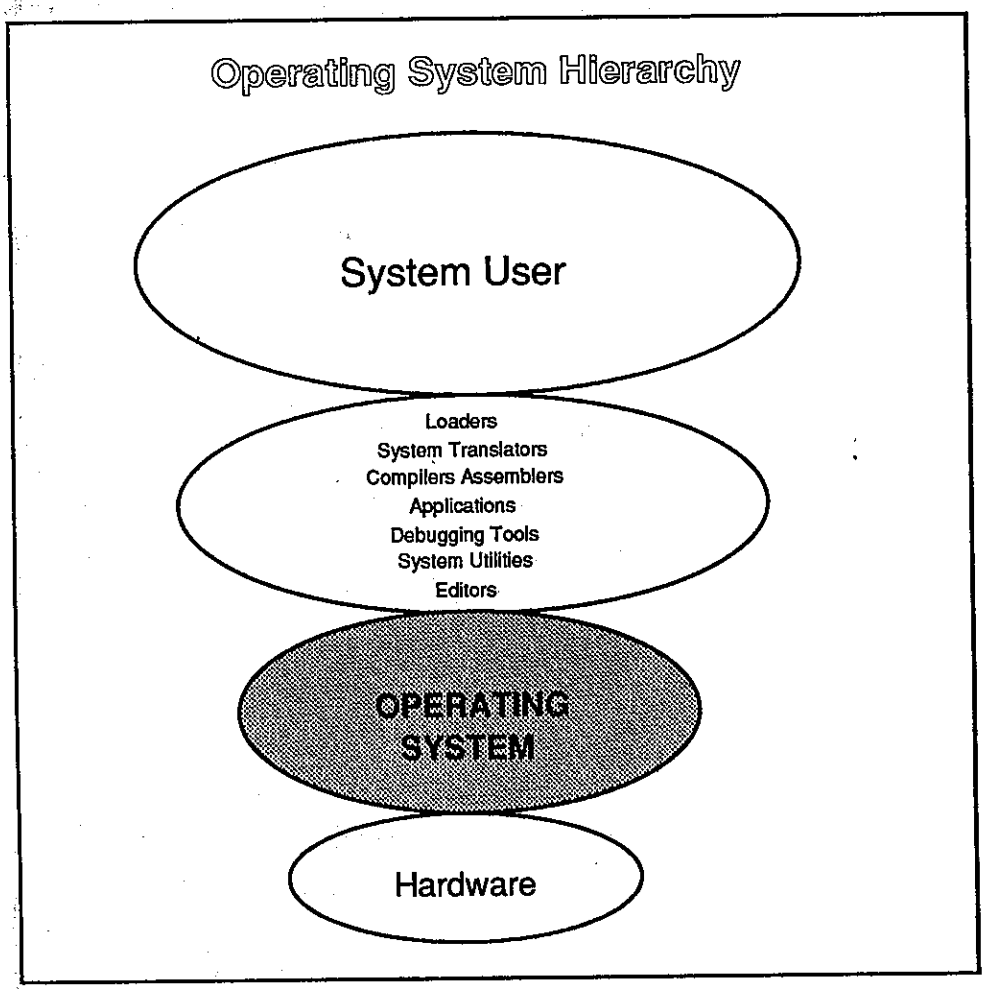

Figure 9. Operating System Hierarchy

As with other hardware and software topics discussed in the overview section, there are numerous products on the market to accomplish the same basic task. UNIX, MS-DOS, iRMX-II, OS/2, OS-9, and PDOS are among the more widely accepted operating systems. So once again, a procedure for determining the best operating system for real-time traffic control must be constructed.

Today's real-time operating systems provide rather sophisticated services. These include, but are not limited to: multiprocessing, multitasking, intertask communications, extensive interrupt management, and cross or target development capabilities. Each of these functions requires software that supports algorithms employing superior allocation and arbitration techniques. Multiprocessing simply refers to the ability to support several microprocessors within one system; multitasking addresses the ability to perform several tasks

ClibPDF - www.fastio.com

simultaneously; intertask communications support communication through priority-based mailboxes, semaphores, and regions; extensive interrupt management offers comprehensive response techniques to requests (real-time demand) for services; cross or target development provides the necessary tools to completely develop an application on either the target system or another environment intended for a different system.

Many of today's systems offer the same features. These include: file and software management, processor management, I/O device management, and memory management. The file management component could be considered the most influential part of the system because it acts as the catalyst in machine/user interface (11). It is responsible for creating, deleting, reading, writing, moving, naming files, and overall file organization. I/O device management is also a very important consideration, because it dramatically affects system efficiency. Methods for allocating peripherals vary greatly depending on the specific type of I/O device. So, in a traffic control system which supports many different types of peripherals, this becomes a serious concern. Today's operating systems offer a sophisticated process for microprocessor time allocation. One program can be executing on the microprocessor while another is running on an I/O operation. This type processing requires strict control, and uses the processor to its fullest. Based on these concepts and the fact that most operating systems target a specific processor, many operating systems on the market today may be well-suited for our traffic control applications.

UNIX, developed by Bell Laboratories, is written almost entirely in C and targets the Motorola series processors. UNIX is not only a very popular operating system, but could be considered an industry standard for many environments. It is one of very few operating systems designed for multiuser applications; i.e. UNIX can accept users at field terminals as well as the main console.

OS/2 and some of the others are also quite popular, but they are not designed specifically for the 68000 class machines. OS/2, DESQview, Microsoft Windows (2.0 and 386), iRMXII, and MS-DOS, for example, all target the 80286/386 processor. Because a move from the 68000 series processors to the 80286/386 processors would complicate the technology transfer process considerably, these operating systems become somewhat less desirable. There are however many operating systems designed specifically for the 68000 series microprocessor. PDOS, Amiga/Exec, Amiga/DOS, and OS-9 are some the more popular systems.

ClibPDF - www.fastio.com

Existing Custom Traffic Control Systems:

The following information describes three of CALTRANS' special application systems. All three designs have one factor in common; each system resulted from the lack of capable standard control equipment for the intended applications. Requirements exceeded current controller memory capabilities in one system, required above standard I/O in another, and superior development tools in the third. Descriptions will detail hardware and software considerations involved in each design. The District 04 San Francisco/Oakland Bay Bridge Traffic Management System (TMS) will be described. The Statewide High Speed Weigh-in-Motion (WIM) system will be reviewed. And the High Occupancy Vehicle (HOV) Reversible Lane Project in District 11 will be discussed.

San Francisco/Oakland Bay Bridge Traffic Management System -

As described in the "Needs Evaluation Section", The traffic surveillance and control center is designed to rapidly detect and respond to incidents on the bridge and to manage the resulting congestion. The system consists of a multitude of monitored locations (inductive loop and optical detectors fed to numerous modified local traffic controllers using 6809 processors), CCTV and CMS units (bulb matrix type), transmitters/receivers, display screens in the control room, and main processing computers (two VME chassis with twin processors in each 68000 and 68030). A block diagram of the system configuration is shown in Figure 10.

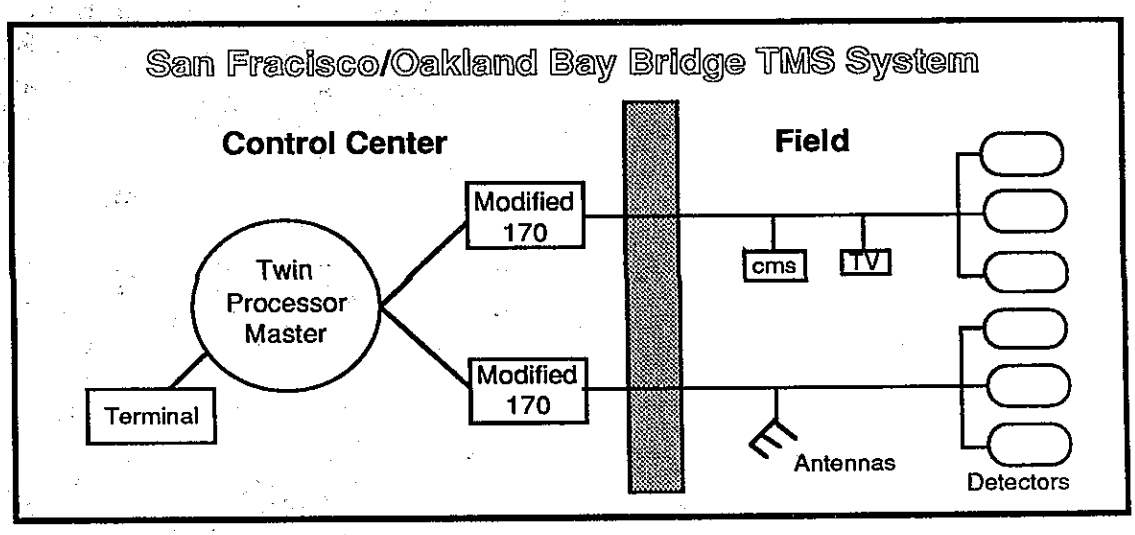

Figure 10. San Francisco/Oakland Bay Bridge TMS Block Diagram

ClibPDF - www.fastio.com

The system did not specify standard control equipment because it was felt the current standard consumed too much time (machine cycle time), offered limited I/O capabilities, and did not provide enough serial ports for their application. Although system designers did not specify standard traffic controllers, they did choose to stay with Motorola components in order to maintain compatibility with other CALTRANS equipment. The system was designed to gather CCTV images, vehicle occupancy and volume data, detector and TV failure monitoring, and station to station communications.

An important design consideration was superior development capabilities. This included cross development, simulation, error checking, debugging, and exceptional emulation capabilities, to avoid "on machine" development. To achieve this, system software included 6809 assembly, 68000 assembly, high-level C, and OS-9 and UNIX operating systems. This combination resulted in an easier development process, more user friendly control, and an expandable system.

Although these same features are not found in the next system reviewed, the WIM system does provide custom control that could not be satisfied with CALTRANS' standard control equipment.

Statewide High-speed Weigh-in-Motion (WIM)-

The WIM system provides microprocessor control equipment and software designed to collect, process, store, transmit (to host computer), and manipulate data related to the counting, classifying, speed monitoring of all vehicle types, and provides dynamic bus and truck weigh stations.

Currently, there are eight weigh stations throughout the state. This number is expected to increase to fifty within the next three years, and eventually to ninety in accordance with FHWA requirements.

A typical station employs a $30,000 microprocessor-based (8080) controller and supports dual power supplies (battery backed with 12V gel cells), 2.4 Megabytes of RAM, A/D boards, I/O boards, Eurobus interfacing, and turbo Pascal software. Several stations support remote monitoring via Hayes Smart Modems. The WIM system provides for single threshold weighing with scales in each lane of travel, and operates over a speed range of 2 mph to 80 mph. The data gathered by the system are listed in table 5.

ClibPDF - www.fastio.com

Table 5. Weigh-In-Motion Data

- Weight of each axle:
  - single axle +/- 5% Mean
  - tandem axle +/- 5% Mean
  - gross weight +/- 5% Mean
- Axle spacing +/- 6" Mean
- Vehicle Length +/- 12" Mean
- Speed +/- 1 mph
- Vehicle Classification:
  - 15 Classes:
    - Class 1 through 13 - FHWA Scheme "F"
    - Class 14 user defined class
    - Class 15 will identify any vehicle not conforming to classes 1 through 14
- Hourly vehicle counts by speed range for each 24 hr period
- Individual records for all vehicles Class 4 and higher.
  - Each record includes:
    - Time and Date
    - Lane number
    - Vehicle number
    - Speed
    - Vehicle Classification
    - Weight in kips of each wheel or dual set of wheels left by right side and by axle number
    - spacing in feet between each sequentially numbered axle
    - Overall length of each vehicle or combination of vehicles in feet
    - Code(s) for weight violation(s)
    - Code for invalid measurement
- Invalid measurements log
- Violations (weight per axle)

Because hardware and software are proprietary, equipment specifications are not available. Of course, this also implies that no part of the equipment or software may be modified in-house. Unfortunately this fact presents significant limitations to an already expensive system. When the need for a modification does arise, or a

ClibPDF - www.fastio.com

repair must be made, it is not uncommon for a station to be down up to six months, as the equipment manufacturer, IRD, is a German based company and technical services and parts are not readily available. WIM's operations personnel felt slower loop scan rates found in the current CALTRANS controller and the inability of standard to store up to 2.4 Megabytes of data prohibited its use in this particular application.

HOV Reversible Lane:

As described in the "Needs Evaluation Section", CALTRANS' HOV lanes are reversible car pool lanes, located on an eight-mile stretch of Interstate 15 in District 11. The system allows vehicles with two or more passengers to enter a specially designated lane offering free flow travel during commute hours. This system consists of several traffic control computers which open and close freeway gates, raise and lower barricade type pop-up tubes, operate CMS units, and gather main line data. Figure 11 (source, CALTRANS' Going Places Quarterly) depicts the lane layout and control hardware configuration.

Previous experience had shown the HOV lane designers that the system master would require equipment more capable than CALTRANS' standard traffic controller. It was felt that a system based solely on assembly language, such as the standard controller, would have been very difficult to implement. Assembly coding would have required more time than a system of this nature could afford. The operator interface would have been very poor, and features would have been drastically reduced by the 6800 processor's speed and memory size. Code for computations would have been slow and cumbersome, and interrupt algorithms may not have possessed the resolution necessary (due to 170 controller's 60 Hz scanning process) to provide appropriate responses and required services.

Putting these compelling factors aside, circumstances also required that the selected design support superior development capabilities. In December 1987, the contractor responsible for system design and development went bankrupt. This left a large part of the hardware and nearly all of the software to be completed in a very short period of time.

ClibPDF - www.fastio.com

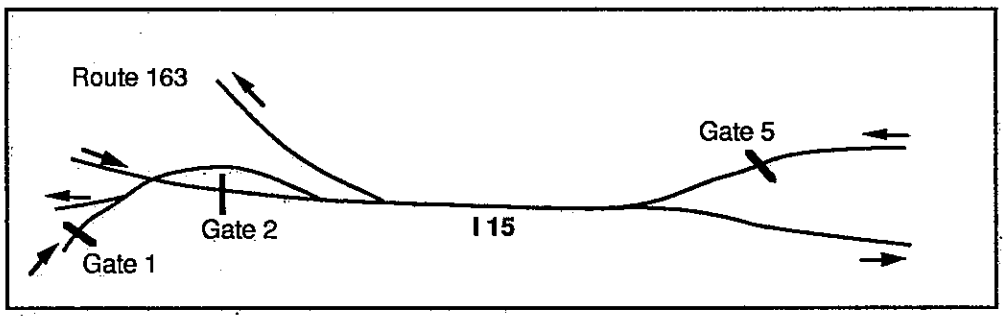

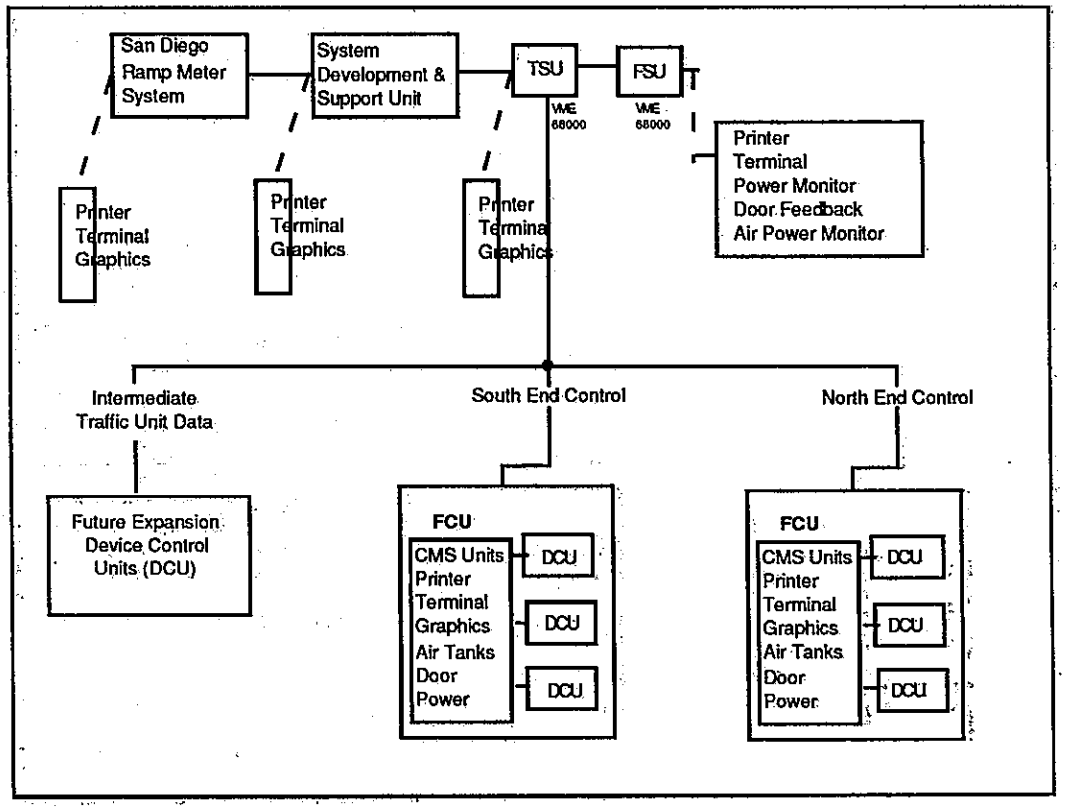

Figure 11. HOV Reversible Lane System Block Diagram

To accomplish this enormous task, a three tier system was designed in which each tier operated on the same identical software. This concept allowed parallel development of the traffic system unit (TSU),the operators control station and link to a 70 megabyte hard disk development computer, the field control units (FCU), downstream controllers for I/O , and the device control units (DCU), controllers for device drivers.

ClibPDF - www.fastio.com

To expedite the development process, designers chose a real-time multitasking operating system called OSENGINE. Much of the software was written in C, with many components written in 68000 assembly. All of the application software was developed with UNIX. This software combination provided an English-like operator interface, multilevel password security, extensive error checking algorithms, and superior debugging and testing capabilities.

Existing Equipment Summary:

All three systems, the SFOBB TMS, the WIM system, and the HOV reversible Lanes resulted in unique real-time control designs. Table 6 summarizes the hardware and software information provided in this overview section. Each design is quite different from the others. This raises important questions regarding standardization. The Trade-Off Analysis presented in the next section attempts to answer some of these questions.

Table 6. Existing Non-standard Control System Hardware Summary

SYSTEM NAME	SF/OAKLAND TMS	WIM	HOV
Micro-processor	Motorola 6809 Motorola 68030	Intel 8080	Motorola 68000
Standard Bus	VME	None	VME
Programming Language	6809 Assembly 68000 Assembly C	8080 Assembly Turbo Pascal	68000 Assembly C
Operating System	OS-9 UNIX	None	OSENGINE UNIX

IV.C. Trade-Off Analysis:

Based on the information presented so far, it appears that although CALTRANS' need for advanced application control equipment is clear, the necessity for a new "standard" controller may not be obvious. This section investigates trade-offs which will help determine the value of designing and implementing such a standard. In this process, potential

ClibPDF - www.fastio.com

alternatives are defined, design considerations for each alternative are analyzed, and advantages and disadvantages are outlined.

Alternatives:

As in any trade-off analysis, the most obvious alternative is the "do nothing" option. For the problem at hand, however, this is not a viable alternative. The need for an advanced controller cannot be ignored, therefore this option is not discussed. However, the possibilities listed below are quite feasible, and are addressed in appropriate detail. Alternatives include: A) modify current standard traffic control equipment as necessary; B) design and implement application-specific custom controllers; C) design and implement a new standard controller for advanced applications.

Alternative A: Modify Current Standard Traffic Control Equipment as Necessary

This is a somewhat open statement, as the term modification can take on a number of different meanings. For example, the heart of the machine, the microprocessor, could be upgraded. Memory size could be extended. The communications interface could be reconfigured. Additional I/O could be added. LCD graphics could replace the current seven segment LED display. Extra slots for additional peripherals could be added. The possibilities are virtually unlimited.

At first glance, this alternative may look quite attractive. Expansion capabilities are endless. CALTRANS personnel are already familiar with the equipment. Start-up costs might be less than any other alternative. There are other facts to consider, however.

In order to keep up with technological advancements and changes in traffic control strategies that have occurred since the inception of the current standard thirteen years ago, numerous modifications to the original design have been made. Some were successful, many were not. In fact, over five years ago in 1984, a special meeting was called by CALTRANS' Electrical Hardware Committee. The purpose of this meeting was to identify: " the problems of the 170 generally relating to the following: obsolescence, limitations, deficiencies, and system needs "

This session resulted in a twenty-three page report dedicated to "problem identification". Problems included, but were not limited to: discontinued production of specified EPROMs, C1 connector I/O capacity limitations, need for more RAM than specified, need for more ROM than specified, slow Real-Time Clock scan speed, Downtime

ClibPDF - www.fastio.com

Accumulator errors, false interrupt signals, need for multiple serial ports and modems, and module/controller incompatibilities.

Although many of the problems identified in the report were solved with modifications, many were not, and just as many new problems have developed since the meeting took place. The 1989 Electrical Conference Meeting in Kingvale pointed out this fact. Several new, as well as older, on-going problems, were addressed by both Headquarters and District personnel. Technology upgrade problems, module/controller incompatibilities, hardware limitations, and inventory supply problems were discussed. District personnel also suggested that several of the older controllers produced by different manufacturers are beyond modification and should not be upgraded, but rather replaced altogether.

So essentially, although the "modification alternative" does have some desirable features, current standard equipment is already suffering from effects of modifications made just to accommodate the needs of basic traffic control applications. To try to stretch the standard's capacity even further, would result in numerous problems.

Even if inherent modification problems could be overcome, system hardware would always be limited by the low performance level of an 8-bit processor (see 8-bit vs 16- & 32-bit information in hardware overview section). At best, the system would be capable of supporting operating frequencies of 2 MHz and programming and development capabilities would be handicapped by the limited instruction set.

Another important consideration is that of availability. With the advent of 16 and 32-bit processors, reduced instruction set chip (RISC) processors, and digital signal processors (DSP), the less capable 8-bit processor is becoming quite rare, particularly in complex real-time control applications. And although 8-bit processors may be safe from extinction due to the role they play in peripheral-type stand-alone devices, their lack of industry support could become a serious problem in the future.

Even though CALTRANS personnel are familiar with Motorola's 8-bit architecture, and technology transfer would be relatively easy, a modified 8-bit traffic controller may not support the performance level or industry backing required for sophisticated traffic control applications. The list below summarizes the advantages and disadvantages of this alternative.

ClibPDF - www.fastio.com

ADVANTAGES:

- Easy technology transfer - Expertise already exists and current equipment is well liked.
- Initial investment small - Majority of equipment already exists and new controllers can be purchased for approximately $1000 per unit (does not include cabinet and associated wiring).

DISADVANTAGES:

- Does not support standard - Customization destroys current standard. And only five manufacturers are qualified to supply existing 170 control units to the state.
- Not user friendly/Poor development capabilities- Low level language is cumbersome and doesn't support operating systems and other development tools.
- Low level of performance - Limited by 8-bit microprocessor, does not possess the speed, memory capacity, or other vital aspects required by today's advanced control needs. No standardized data bus capabilities for system expansion.
- Reliability/Compatibility problems - Experience has shown that modifications result in numerous and on-going problems.

Alternative B: Design and Implement Application Specific Custom Controllers

This alternative is similar to option A, modification of the existing standard, because it addresses the problem of advanced control on a unit-by-unit basis. In other words, each specific traffic control application requires a custom control design.

This design method presents obvious drawbacks. Expense, for example, is a problem. In the case of the WIM custom controllers each unit costs $30,000. And the fact that this design is proprietary, can create operational nightmares (see WIM downtime information in the Hardware and Software overview section). Also, as with any proprietary product, standardization, industry support, ease of technology transfer, reliability, and overall ability to perform the

ClibPDF - www.fastio.com

desired tasks, all rely solely on manufacturer and vendor performance. The user is left with a limited degree of operational and functional control.

Even nonproprietary or in-house designs may prove less than desirable. The HOV Reversible Lane and SFOBB TMS projects described previously provide excellent examples of in-house custom designs. Each system employs state-of-the-art standardized components and software, promoting good industry support, excellent development capabilities, and user friendly operation.

But, incompatibilities still exist between these custom controllers. Technology transfer problems accompany each new design. And as with any custom design, initial investments in time and money are substantial. Also, the reliability and functional capacity of each system is at the mercy of the system designers.

So, although this alternative may adequately address individual traffic control needs as they arise, for District-to-District coordination and long-term traffic operations, it can present many problems. Nonetheless, due to changing traffic management strategies and rapid growth in real-time control technology, CALTRANS custom equipment and systems are being deployed throughout the state. The advantages and disadvantage of designing and implementing application-specific control equipment are summarized below.

ADVANTAGES:

- May support industry standard - Use of state-of-the-art standardized equipment supports orderly hardware and software changes, offers numerous design options (i.e.many standard products available), and provides lab- and field-hardened devices.
- Capable design - Unit-by-unit design can reflect latest technological advances. And custom designs by nature reflect the best design for a specific application.
- User friendly - New systems that can accommodate high-level languages and operating systems are inherently easy to learn and use.

DISADVANTAGES:

- Does not support State standard- Although an industry standard may exist, unit-by-unit design

ClibPDF - www.fastio.com

would not provide a statewide standard.

- Technology transfer difficult - State personnel would be required to learn new software and hardware.
- Large start-up costs - Due to custom design concept, "new" design and implementation expenses would be incurred with each system.
- Large annual expenses - Each system would require a unique annual budget and, therefore, the advantage of quantity discounts and repetitive maintenance /operations type budgeting would not exist.
- State expertise limited - Custom design would prohibit State from developing an organized pool of trained experts in the physical and operational aspects of the system.
- May result in proprietary system - Some system managers may opt to employ a proprietary system. This would result in limited operational and nonexistent physical control for the users.

Alternative C: Design and Implement a New Standard for Advanced Applications

The third alternative is to design and implement an additional standard controller. Not only would this option provide the same type of standardization that made the existing standard so successful, but it would also offer the option of a designing around state-of-the-art real-time control equipment.

It is important to understand that this proposed advanced standard only applies to "advanced transportation applications", and is not intended as a replacement for the current standard. As pointed out in the Needs Evaluation section, the existing Traffic Control Equipment Specifications provide an essential service for basic traffic control and ramp metering, and are felt to be perfectly adequate for these functions. However, for more sophisticated applications, such as WIM systems, HOV reversible lanes, TOS, and TMS, a more advanced concept is in order.

The proposed standard would take the most advanced real-time control technology and apply it to the most advanced transportation control applications. This concept is outlined in Figure 12. The hierarchy of standardization would provide a statewide standard for overall control and industry standards for functional control.

ClibPDF - www.fastio.com

Together, the specifications would ensure cost-effective system evolution, orderly hardware and software customization (i.e. control industry standard bus permits use of special application boards and software without equipment modification), and communications designed around industry-accepted protocols.

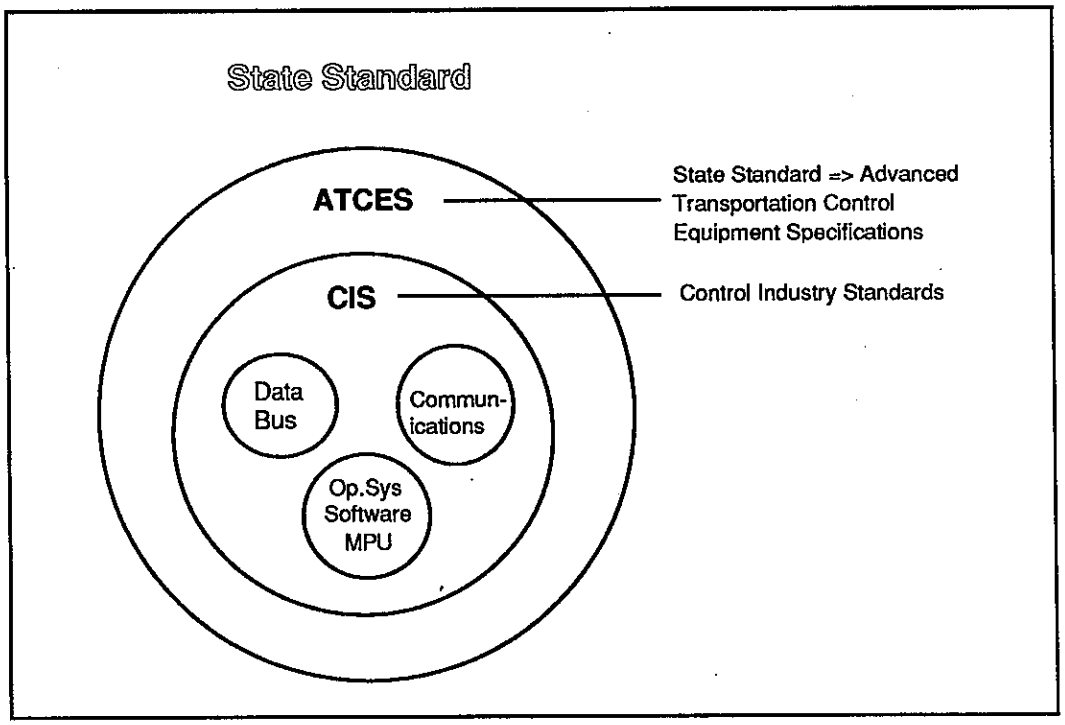

Figure 12. Proposed Advanced Transportation Controller Hierarchy of Standardization.

The benefits of this alternative are summarized below.

ADVANTAGES:

- Supports industry standards - Use of state-of-the-art standardized equipment ensures orderly hardware and software changes and customization, provides lab- and field-hardened devices, equipment designed around industry accepted communications protocols, strong industry backing of products and superior product availability.
- Supports state standard - This may be the single most important advantage of a system aside from its ability to perform required control functions. A

ClibPDF - www.fastio.com

statewide standard provides functional and operational coordination from District to District, District to Headquarters, and possibly, District and Headquarters to other agencies.

- Easy technology transfer - Unlike the second alternative which also suggests state-of-the-art control equipment, this alternative proposes standardization which would support a pool of State system experts that could train other personnel as necessary.
- Capable system design - State-of-the-art equipment would provide superior performance. Standardized components provide exceptional system flexibility and reliability.
- User friendly - Advanced technologies offer excellent development tools, English-like high-level language, and operating systems which result in a very user friendly design.
- Relatively small annual costs - Standardized system would provide for an annual budget based on quantity discounts and repetitive type maintenance and operations expenses.
- Very reliable - All equipment is thoroughly lab and field tested and must meet all standards and protocol requirements. No equipment is single sourced.

DISADVANTAGES:

- Limited state expertise - Relatively few state personnel are experienced with the proposed equipment.
- Relatively large start-up costs - Because this alternative would require all new equipment, start-up costs would be significant. However, it should be noted that because the equipment would be standardized, quantity discounts could be obtained.

To complete the Trade-off analysis, table 7, form the conclusion section, outlines the advantages and disadvantages of each alternative.

ClibPDF - www.fastio.com

Summary:

Table 7. Traffic Control Equipment Analysis Summary

	ALTERNATIVE A (Modify current standard)	ALTERNATIVE B (New custom controllers)	ALTERNATIVE C (New standard controller)
COMPLIES WITH INDUSTRY STANDARDS	FAIR	FAIR	GOOD
INDUSTRY SUPPORT	FAIR	FAIR	GOOD
EQUIPMENT DESIGN	FAIR	GOOD	GOOD
TECHNOLOGY TRANSFER	GOOD	POOR	FAIR
RELIABILITY	FAIR	FAIR	GOOD
STATE EXPERTISE	GOOD	FAIR	FAIR
USER FRIENDLY	POOR	FAIR	GOOD
DEVELOPMENT TOOLS	POOR	FAIR	GOOD
START-UP COSTS	GOOD	FAIR	FAIR
ANNUAL COSTS	FAIR	FAIR	GOOD

ClibPDF - www.fastio.com

ClibPDF - www.fastio.com

* * ACRONYMS * *

ATSAC - automated traffic surveillance and control
AVI - automated vehicle identification
CCTV - closed circuit TV
CIC - Critical intersection control
CMS - changeable message sign
DCU - device control unit
FCU - field control unit
HAR - highway advisory radio
HOV - high occupancy vehicle
IEEE - Institute of Electrical and Electronic Engineers
ILD - inductive loop detector
SFOBB - San Francisco Oakland Bay Bridge
SBC - single board computer
TOC - traffic operations center
TOS - traffic operations system
TMS - traffic management system
TSU - traffic system unit
VME - versa module eurocard
WIM - weigh-in-motion

* * REFERENCES * *

(1) " Microprocessor controller unit - Type 170, Manual, " Engineering Measurements Company, Longmont,Colorado, 1974.

(2) " Model 170 Microcomputer, Assemblies and Operation, " Safetran Traffic Systems Division, Santa Clara, Calif., 1978.

(3) " Will new 32-bit buses gather steam? ," Lieberman, D., Computer Design Magazine, February 1, 1989/Vol 28 No 3.

(4) " Learning C ," Hines, R.J., Electronic Test Magazine, February 1989/Vol 12 No 2.

(5) " Technology Transfer Primer ," Schmitt, R.P., Mulroy, M.J., Beimborn, E.A., Office of Statewide Transportation Programs, University of Wisconsin Extension, Milwaukee, Wisconsin, August 1984.

(6) " Software Design for Real-Time Multiprocessor Systems," Heath,W.S., IEEE Micro Magazine, December 1987.

(7) " Use a Systematic Procedure to Evaluate New Microprocessors," Hemenway, J, Engineering Design News Magazine, November 1979.

(8) " Hello Mr. Chips," Anderson, J.J., Creative Computing Magazine, June 1985.

(9) " Choosing A Programming Language," Elfring, G., Byte Magazine, June 1985.

(10) "The C Programming Language," Kernighan, B., and Ritchir, D., Prentice Hall

ClibPDF - www.fastio.com

Software Series, Englewood Cliffs, New Jersey, 1987.

(11) " To Choose an Operating System," Hemenway, J., Engineering Design News Magazine, November 5, 1980.

(12) " High-Speed 32-Bit Buses for Forward Looking Computers," Borrill, P.L., IEEE Spectrum Magazine, July 1989/Vol 26 No 7.

* * BIBLIOGRAPHY * *

(1) " Vehicle Traffic Control," New England Research Application Center, Storrs, Connecticut, June 1976 - May 1980.

(2) " Roads in Urban Areas," PIARC XVII World Road Congress, Sydney, Australia, Oct. 1983.

(3) " Demand-Responsive Decentralized Urban Traffic Control, Part I: Single Intersection Policies," Gartner, N., Lowell University Research Foundation, Mass, Feb.1982.

(4) " Automated Mixed Traffic Transit Vehicle Microprocessor Controller Unit, " Marks,R., Cassell,P., Johnston,A., Jet Propulsion Lab., Pasadena, Calif, Feb. 1981.

(5) " Vehicle Detection-Phase III: Passive Bus Detector/Intersection Priority System Development,"Anderson, P., Larson, R., Putman, G., Wick, D., Honeywell, Inc., Minneapolis, Minn, Dec 1975.

(6) " Automatic Vehicle Identification, Laboratory Testing Project Report," Chatusripitak, S.; Rounds,R., Ung, E., California Department of Transportation, December 1987.

(7) " Specifications For A Truck Weigh-In-Motion System, "California Department of Transportation, Transportation Laboratory, March 1984.

(8) " Comparing and Assessing Programming Languages,"Feuer,A.S., Gehani, N., Prentice Hall Inc., Englewood Cliffs, New Jersey, 1984.

(9) " Multiprocessor Systems for Real-Time Applications,"Conte, J., Del Corso, B., Reidel Publishing Company, Boston / Lancaster,1985.

(10) " Master Selection Guide," Motorola Semiconductor Inc., Phoenix, Arizona, 1984.

(11) " Control Engineering, VMEbus Buyers Guide ," Control Engineering, Microcomputers Users Group, Cahners Publishing Co, San Diego, California, 1989/Vol 8 No 1.

(12) " Control Engineering, Multibus II Buyers Guide ," Control Engineering, Microcomputers Users Group, Cahners Publishing Co, San Diego, California, 1989/Vol 8 No 1.

(13) " Communications In Traffic Control Systems," jhk & associates, Federal Highway Administration Report FHWA-RD-88-011, August, 1988.

(14) " Microcomputer System Design, A Collection of Technical Articles," Software Engineering Staff of Hemenway Corporation, Boston, Mass. 1982.

(15) " Battle of The Buses: And The Winner Is.," Rosenberg R., Electronics Magazine,

ClibPDF - www.fastio.com

November 1987.

(16) " New Technology Shaping Trends in Traffic Control Systems," Hahn, J., Mc Neill, M.,Public Works Magazine,September 1985.

(17) " UNIX and The 68000, " Rood, A.L., Cline, R.C.,Brewster,J.A., BYTE Magazine, September 1986.

ClibPDF - www.fastio.com

ClibPDF - www.fastio.com