ClibPDF - www.fastio.com

ClibPDF - www.fastio.com

TECHNICAL REPORT STANDARD TITLE PAGE

1 REPORT NO. FHWA-CA-TL-6610-77-34	2 GOVERNMENT ACCESSION NO.	3 RECIPIENT'S CATALOG NO.
4 TITLE AND SUBTITLE THE EFFECTS OF COATINGS APPLIED TO CONTACT SURFACES OF HIGH-STRENGTH BOLTED JOINTS ON SLIP BEHAVIOR AND STRENGTH OF JOINTS		5 REPORT DATE December 1977
		6 PERFORMING ORGANIZATION CODE
7 AUTHOR(S) J. P. Dusel, Jr., J. R. Stoker, and E. F. Nordlin		8 PERFORMING ORGANIZATION REPORT NO. 19601-636610
9 PERFORMING ORGANIZATION NAME AND ADDRESS Office of Transportation Laboratory California Department of Transportation Sacramento, California 95819		10 WORK UNIT NO.
		11 CONTRACT OR GRANT NO. D-4-112
12 SPONSORING AGENCY NAME AND ADDRESS California Department of Transportation Sacramento, California 95807		13 TYPE OF REPORT & PERIOD COVERED Final Report
		14 SPONSORING AGENCY CODE

15 SUPPLEMENTARY NOTES

This work was accomplished in cooperation with the United States Department of Transportation, Federal Highway Administration.

16 ABSTRACT

The research objective was to determine if certain rust inhibiting coatings applied on contact surfaces of friction-type high-strength bolted structural joints could provide sufficient slip resistance under constant or cyclic loads. The performance of various coatings, including a vinyl wash primer, an organic zinc-rich primer and zinc metal applied by hot-dip galvanizing, were evaluated using results of tensile, creep, and cyclic tests on double shear butt spliced specimens. Important parameters considered in the testing program were coating type, hardness and thickness, clamping bolt tension, and method of loading.

Slip coefficients (K) were determined from results of tension tests and ranged from K = 0.19 to K = 0.65. Specimens coated with relatively thin films of organic zinc-rich primer had an average slip coefficient of K = 0.36. It was found that when bolt preload is increased, the slip load increases also, but at a lesser rate. Creep and cyclic tests were determined to be important in assessing the effect of coatings on long term slip behavior of structural joints.

Based on satisfactory results in both creep and cyclic tests, recommendations are made to allow from 1 to 3 mils (25.4 to 76.2 μm) of organic zinc-rich primer to be applied to contact surfaces of structural joints.

17 KEY WORDS Joints, high strength bolts, steel structure painting, corrosion prevention, protective coatings, zinc, paints, friction tests, coefficient of friction	18 DISTRIBUTION STATEMENT No restrictions. This document is available to the public through the National Technical Information Service, Springfield, VA 22161

19 SECURITY CLASSIF. (OF THIS REPORT)	20 SECURITY CLASSIF. (OF THIS PAGE)	21 NO. OF PAGES	22 PRICE
Unclassified	Unclassified	64	

DH-TL 1242 (Rev. 3-74)

ClibPDF - www.fastio.com

ClibPDF - www.fastio.com

STATE OF CALIFORNIA
DEPARTMENT OF TRANSPORTATION
DIVISION OF CONSTRUCTION
OFFICE OF TRANSPORTATION LABORATORY

December 1977

TL No. 636610
FHWA No. D-4-112

Mr. C. E. Forbes
Chief Engineer

Dear Sir:

I have approved and now submit for your information this final research project report titled:

"THE EFFECTS OF COATINGS APPLIED TO CONTACT SURFACES OF HIGH-STRENGTH BOLTED JOINTS ON SLIP BEHAVIOR AND STRENGTH OF JOINTS"

Study made by ..... Structural Materials Branch

Under the Supervision of ..... E. F. Nordlin, P. E.

Principal Investigator ..... J. R. Stoker, P. E.

Co-Investigator ..... J. P. Dusel, Jr., P. E.

Report Prepared by ..... J. P. Dusel, Jr., P. E.

Very truly yours,

George A. Hill

GEORGE A. HILL
Chief, Office of Transportation Laboratory

JPD:bjs
Attachment

ClibPDF - www.fastio.com

ClibPDF - www.fastio.com

TABLE OF CONTENTS

		Page
	ACKNOWLEDGEMENTS	1
I.	INTRODUCTION	2
II.	OBSERVATIONS AND CONCLUSIONS	6
III.	RECOMMENDATIONS AND IMPLEMENTATION	10
IV.	DESCRIPTION OF EXPERIMENTAL PROGRAM	12
	A. Testing Program - General Discussion	12
	B. Important Research Parameters	14
	1. Types of Contact Surface Preparation	14
	2. Coating Hardness and Thickness	15
	3. Bolt Tension	15
	C. Specimen and Test Apparatus Description	17
	1. Specimen Design and Fabrication	17
	2. Determination and Control of Bolt Preload	22
	3. Assembly Techniques	23
	4. Description of Instrumentation	23
	5. Test Apparatus Description	25
	D. Testing Procedures	28
	1. Tension Tests	28
	2. Creep Tests	28
	3. Cyclic Tests	29

ClibPDF - www.fastio.com

ClibPDF - www.fastio.com

Table of Contents (Continued)

Page

E. Data Reduction Procedures 29

1. Tension Tests 29

2. Creep Tests 31

3. Cyclic Tests 31

V. TEST RESULTS AND ANALYSIS 33

A. General Discussion 33

1. Tension Test Results 33

2. Creep Test Results 34

3. Cyclic Test Results 34

B. The Effect of Varying Bolt Tension on Slip Characteristics 36

C. The Effect of Coating Properties and Type on Slip Behavior 37

D. The Effect of a Variation in Coating Thickness on Slip Behavior 38

VI. REFERENCES 41

VII. APPENDICES 44

A. Excerpts from Specifications for "Structural Joints using ASTM A325 and A490 Bolts". ... 45

B. Excerpts from State of California Department of Transportation "Standard Specifications - January 1978". 48

C. Summary of First Stage Tension, Creep, and Cyclic Load Test Results 50

D. Summary of Second Stage Tension, Creep, and Cyclic Load Test Results 53

ClibPDF - www.fastio.com

Page

[illegible] 29

[illegible] 29

[illegible] 31

[illegible] 31

[illegible] 33

[illegible] 33

[illegible] Test Results 33

[illegible] Test Results 34

[illegible] Test Results 34

[illegible] of Varying Bolt Tension on [illegible] 36

[illegible] of Coating Properties and [illegible] Slip Behavior 37

[illegible] Effect of a Variation in Coating [illegible] on Slip Behavior 38

[illegible] 41

[illegible] 44A

[illegible] from Specifications for "Structural [illegible] using ASTM A325 and A490 Bolts" 45

[illegible] from State of California Department of [illegible] Transportation "Standard Specifications - [illegible] 1978" 48

[illegible] of First Stage Tension, Creep, and [illegible] Load Test Results 50

[illegible] of Second Stage Tension, Creep, and [illegible] Load Test Results 53

ClibPDF - www.fastio.com

ACKNOWLEDGEMENTS

The contents of this report reflect the views of the Transportation Laboratory which is responsible for the facts and the accuracy of the data presented herein. The contents do not necessarily reflect the official views or policies of the State of California or the Federal Highway Administration. This report does not constitute a standard, specification, or regulation.

The authors wish to express their appreciation for the able assistance provided by the following staff members of the Transportation Laboratory in conducting the test program:

William F. Crozier Robert S. Ferwerda	Project Planning and Coordination
Duane H. Andersen Richard L. Blunden	Specimen Design and Data Reduction
Joe E. Wilson Leonard A. Nordmann	Fabrication of Test Specimens
Bill J. Chapman Ray Warness	Painting of Specimens
Walter N. Richards	Testing Machine Operation

The authors also wish to thank Messrs. Richard LeBeau, James Munro, and John Poppe of the Office of Structures for providing technical consultation.

ClibPDF - www.fastio.com

I. INTRODUCTION

Interest in the use of high-strength bolted structural joints originated in the United States in the late 1940's when it was shown that the fatigue life of bolted joints was superior to riveted joints. Structural joints, because of the likelihood of severe stress fluctuations and reversals where slippage would be undesirable, have usually been designed as friction-type connections. A high slip coefficient of contact surfaces was therefore desirable and was relied upon to develop the loads transmitted through the joint.

Until 1970, the Research Council on Riveted and Bolted Structural Joints (RCRBSJ) specified that "contact surfaces within friction-type joints shall be free of oil, paint, lacquer or galvanizing" (see Appendix A-1). In order to provide further assurance that a high slip coefficient would be maintained, the California Division of Highways Standard Specifications dated January, 1969 required that at the time of assembling the contact surfaces in bolted joints "shall be thoroughly cleaned of rust, mill scale, dirt, grease, paint and other material foreign to the steel". These California specifications also required that all exposed surfaces of new structural steel shall be blast cleaned and painted. Furthermore, it was required that the blast cleaning and application of the prime coats of paint shall be performed prior to erection of the steel. As a result, structural steel bridge members are generally blast cleaned and painted (prime coats) in the fabrication shop. The contact surfaces of bolted joints are usually blast cleaned at this same time but masked off when the prime coats of paint are applied. This results in clean contact surfaces at this stage with high slip coefficients ($K \simeq 0.5$ when sandblasted). Unfortunately, the unprotected shop cleaned contact surfaces become rusted by the time the structural steel is delivered to the bridge site and field erection and assembly commences. Therefore, it generally has become necessary

ClibPDF - www.fastio.com

for the contractor to bring in blast cleaning equipment and a crew to clean the contact surfaces for a second time before assembly of the bolted joints. This is particularly disruptive and costly because it frequently is the only field blast cleaning necessary on the otherwise prime coat painted structural steel. In addition, it is becoming increasingly more difficult to blast clean in the field due to air pollution ordinances and restrictions. For some time the need has been recognized for a rust inhibitive coating that could be applied to the shop cleaned contact surfaces without seriously reducing the slip coefficient.

In 1970, because of considerable research performed on various coatings and some knowledge gained on their effect on slip coefficients, the RCRBSJ departed from their previous 20 year long clean uncoated contact surface policy by recommending the allowance of three different protective coating treatments for the contact surfaces of bolted joints (see Appendix A-2). These treatments were (1) hot-dip galvanizing, properly scored or roughened, (2) inorganic zinc silicate paints, and (3) metallized zinc or aluminum.

In 1976, the RCRBSJ recommended a still wider variety of acceptable surface preparations and protective coatings for the contact surfaces of bolted joints (see Appendix A-3). These included clean mill scale, blast cleaned steel, hot-dip galvanizing-properly roughened, organic zinc rich paint, inorganic zinc rich paint, metallized zinc or aluminum and vinyl wash. These surface preparations were subdivided into nine different classes and different allowable working stresses which vary according to the type of surface treatment, bolt type, and hole size and shape.

The California Department of Transportation (Caltrans) recognizes and generally follows the recommendations made by the RCRBSJ regarding the treatment and assembly of structural steel joints

ClibPDF - www.fastio.com

using high-strength bolts. However, because of the lack of documented conclusive evidence of satisfactory results, Caltrans has not permitted the use of any protective coatings on the conta. surfaces of bolted joints in steel structures. The Caltrans Standard Specifications dated January, 1978 continue to require that "contact surfaces of all high-strength bolted connections shall be thoroughly cleaned of rust, mill scale, dirt, grease, paint, lacquer, or other material foreign to steel, before assembl (see Appendix B-1).

Nevertheless, Caltrans engineers have continued to recognize the desirability of eleminating a second blast cleaning of the bolted joint contact surfaces in the field. They have also felt that a rust inhibitive coating on the contact surfaces might be added insurance against the development of long term joint corrosion problems. Although Caltrans bridge maintenance personnel have not noticed or reported any significant corrosion problems involving bolted joints to date, they have reported a number of instances of extensive rusting on the contact surfaces of riveted connections on older steel structures. This has resulted in plate separation, fastener elongation and/or unsightly stains on adjacent concrete abutments and piers in a number of cases. The more modern steel bridges with bolted connections are better designed to assure joint tightness and minimize moisture accumulations and are more thoroughly maintained (well maintained coats of paint around the joints). However, the application of a rust inhibitor would be inexpensive and could provide an added safety factor against the possible development of costly joint corrosion problems.

Because of the very limited amount of research and test data available regarding the slip characteristics of friction-type bolted joints with coated contact surfaces, the Caltrans Transportation Laboratory conducted a preliminary investigation

ClibPDF - www.fastio.com

and literature search in 1971(10). As a result of this initial study, this research project was initiated to determine the feasibility of protecting contact surfaces of friction-type strctural joints using corrosion inhibiting coatings. Determination of coating acceptability was made by a testing program involving direct tension, creep and cyclic tests in which the slip characteristics of the coating on contact surfaces of butt spliced high-strength bolted joints were evaluated while investigating and controlling the following variables:

1. coating type, hardness and thickness;
2. minimum specified and a high level of clamping bolt tension;
3. external load levels (creep and cyclic specimens).

ClibPDF - www.fastio.com

II. OBSERVATIONS AND CONCLUSIONS

It was determined that important factors related to the acceptability of a coating for protecting contact surfaces of bolted structural joints from corrosion are:

- coating properties including thickness, hardness, chemical composition, adherance to base metal, and ease of application,
- level of initial clamping bolt tension and changes in tension as a result of external cyclic loading,
- the static slip coefficient as determined by direct tension tests,
- the effects of a sustained load (creep) and cyclic loading on the amount of slip.

The following conclusions as related to friction-type joints were made from the test results obtained during the course of this research project:

A. Vinyl wash primer as tested provided a very low slip coefficient, K = 0.19, and, due to the excessive creep observed, is not considered an acceptable coating for contact surfaces on high-strength bolted joints.

B. Zinc metal applied to contact surfaces of joints by hot-dip galvanizing is not considered practical as (1) it is not always feasible to galvanize large bridge members, (2) it is extremely difficult to control the thickness, composition, and surface irregularities of the zinc coating, (3) the galvanized contact surfaces need to be thoroughly wire brushed prior to assembly, in addition to removing puddled zinc from predrilled bolt holes,

ClibPDF - www.fastio.com

(4) zinc-rich paint coatings may offer equal protection to structural steel bridge members at a lower cost and (5) although not verified in this research project, compressive creep of the zinc which occurs because of high stress concentrations in bumps or flaws on galvanized contact surfaces may well lead to considerable bolt relaxation. This problem may be especially serious if bolts are short and bolt elongation necessary for proper preload is small.

C. Organic zinc-rich primer, formulated according to the State of California Department of Transportation 1978 Standard Specification 8010-61J-36 (see Appendix B-3) is acceptable for coating contact surfaces of the joints of structural members provided that:

1. Contact surfaces are blast cleaned prior to application of paint.

2. Dry film thickness per surface is a minimum of 1.0 mils (25.4 μm) but not more than 3.0 mils (76.2 μm). It is estimated that a 1.0 mil (25.4 μm) coating is ample to prevent steel corrosion in a typical tight joint for the useful life of the structure.

3. Primer paint is cured for a minimum of 3 days prior to joint assembly. Curing time must be long enough so that a paint film hardness of B minimum is achieved, when tested in accordance with ASTM Designation: D3363-74, Standard Test Method for Film Hardness by Pencil Test.

D. Slip coefficients as determined by direct tension tests performed in both the preliminary and main testing program of this research project are shown in Figure 1. It was found that results from tension tests alone are inadequate to correctly assess the acceptability of a coating. Both creep and low level cyclic tests are necessary to determine possible changes in slip characteristics due to long term creep loads and cyclic loading.

ClibPDF - www.fastio.com

Type of Surface Treatment	Nominal Thickness/Surface mils	Slip Coefficients (1) @ Specified Bolt Tensions	
		39 kips	54 kips
Vinyl Wash Primer	6.	--	0.19(1) (2)
Zinc applied by hot-dip galvanizing (wire brushed prior to assembly)	10.	0.46(2)	0.40(2)
Organic zinc-rich primer	1. 3. 6.	0.38(3) 0.41(3) 0.33(2)	0.34(2) 0.33(3) 0.29(2)
Mill scale	--	--	0.28(1)
Sand blasted w/no. 20 mesh Monterey sand	--	0.65(2)	0.48(5)

Notes: (1) Above slip coefficients calculated from the following formula:

$$K = \frac{P}{nbt},$$

Where: K = Slip coefficient
P = Average slip load, kips
n = No. of slip surfaces(2)
b = No. of bolts/slip surface(2)
t = Tension per bolt, kips

(2) Numbers shown in parenthesis beside slip coefficients indicate number of specimens tested.

(3) 1 kip = 4.45 kN
1 mil = 25.4 μm

Figure 1. Summary of Slip Coefficients of Double Shear Tension Specimens Having Various Surface Treatments

ClibPDF - www.fastio.com

E. Acceptable amounts of slip due to creep and cyclic loading will vary depending on design methods used, the type of structure, the frequency of critical loading, and the amount of movement considered acceptable to design engineers.

Both the movement measured between maximum positive and negative loads, and the amount of shift in the point of zero load from the starting zero load position of dial gages in each test were found to be important in evaluating the effectiveness of surface coatings applied to test specimens subjected to cyclic tests.

F. Relatively thick coatings, 6 mils (152.4 μm) of organic zinc-rich primer caused a significant reduction in the slip coefficient, K, and a substantial increase in slip in both creep and cyclic tests performed. A considerable decrease in the tension of clamping bolts was experienced in cyclic test specimens coated with 6 mils (152.4 μm) of organic zinc-rich primer.

G. An increase in bolt preload results in a greater resistance to slip for both galvanized specimens and those coated with an organic zinc-rich primer as evidenced by a comparison of slip results of specimens tested in this project and having bolt preloads of 39 and 54 kips (173.5 and 240.2 kN).

ClibPDF - www.fastio.com

III. RECOMMENDATIONS AND IMPLEMENTATION

It is recommended that:

A. Specifications be written to allow the use of organic zinc-rich primer on contact surfaces of high-strength bolted connections provided that requirements in the State of California Department of Transportation Standard Specification Section 91-2.01 for organic zinc-rich primer are followed and:

- All contact surfaces are thoroughly blast cleaned immediately prior to the application of the primer.
- A minimum dry film thickness of 1.0 mil (25.4 μm) and not greater than 3.0 mils (76.2 μm) is present on contact surfaces.
- Paint curing time prior to joint assembly is a minimum of 3 days and long enough to insure a pencil hardness of B minimum as determined by the ASTM Designation: D3363-74.

B. Vinyl wash primer not be allowed for coating contact surfaces of joints because of excessive slip experienced in sustained load tests.

C. Prior to accepting hot-dip galvanized contact surfaces on friction-type high-strength bolted joints for large structures, further testing should be conducted to determine (1) the effects of variations in coating thickness on slip behavior and (2) if there is a significant loss in bolt tensions because of compressive creep of the zinc coating.

D. Further testing be conducted on joint specimens coated with 4 mils (101.6 μm) of organic zinc-rich primer. Satisfactory test results of such specimens would eliminate the need to paint contact areas of joints with a thinner organic zinc-rich paint film than

ClibPDF - www.fastio.com

the 3 mil (76.2 μm) minimum primer thickness currently required by Caltrans on exposed surfaces of structural steel members. A considerable savings would result by not requiring a special masking of joint contact areas after the first coat of primer on all steel surfaces has been applied.

E. Testing and research be performed on inorganic zinc-rich primers, because of the superior hardness of certain inorganic zinc primers and the exceptionally high slip coefficients found by other agencies who have tested these systems.

Implementation of the findings of this research project will be in the form of new specifications permitting the use of organic zinc-rich primers on contact surfaces of high-strength bolted joints. It is recommended that an average slip coefficient of 0.36 be used for design purposes for the organic zinc-rich primer coatings having a dry film thickness between 1 and 3 mils (25.4 and 76.2 μm). This coefficient corresponds to the average value as detrmined from tests performed in this research project for organic paint coating thicknesses of 3 mils (76.2 μm) or less at both bolt preloads tested.

It is further recommended that an allowable shear stress of 16 ksi (110.5 MPa) be specified for A325 bolts when an organic zinc-rich primer is used on contact surfaces of structural bolted joints having standard or oversize bolt holes and designed as friction-type connections. This is in conformance to current Caltrans requirements for uncoated contact surfaces.

ClibPDF - www.fastio.com

IV. DESCRIPTION OF EXPERIMENTAL PROGRAM

A. Testing Program - General Discussion

A research program was conducted in order to evaluate various corrosion inhibiting coatings considered for use on contact surfaces of bolted structural joints. The testing program was divided into two stages.

The first stage consisted of preliminary tests on specimens which were prepared using the following surface coatings or treatments: (1) vinyl wash primer, (2) an organic zinc-rich primer, and (3) bare steel in both the "as received" condition having tight mill scale and blast cleaned. A total of seventeen tension (five single shear and twelve double shear), six creep (sustained load), and two cyclic load specimens were prepared and testing during this first stage.

Two different joint designs, both single shear and double shear, were used in the specimens for the initial tension tests. Since problems were experienced both in applying eccentric loads without inducing any bending to the single shear specimens and correlating slip load test results of single and double shear tensile specimens, further tests utilizing the single shear specimen design were discontinued and results of these single shear tests are not reported. Results from first stage tests conducted on twelve double shear specimens in addition to results from all first stage creep and cyclic load tests are shown in Appendix C.

A total of fifty specimens were evaluated in the second stage of the testing program. Parameters considered important and investigated were:

ClibPDF - www.fastio.com

- surface preparation of the steel and related properties of the protective coatings including thickness, hardness, surface texture, and curing time.

- variation in bolt preload.

Test specimen dimensions and steel type [ASTM A36], bolt size and type [ASTM A325, 7/8 inches ø x 3 1/4 inches] (22.2 mm ø x 82.6 mm long) and hole diameters [1 inch] (25.4 mm) were all kept constant in this project. In the second or primary stage of testing, two main coatings, both a zinc metal applied by a hot-dip galvanizing process, and an organic zinc-rich primer conforming to the Caltrans specification 8010-61J-36, were evaluated and compared to bare steel with both "as received" mill scale and blast cleaned. An organic zinc-rich primer was selected because this was the same primer Caltrans already specified for painting all structural steel. Caltrans had initially specified an inorganic zinc-rich primer for painting structural steel but found that it was susceptible to mud cracking that was difficult to control under average shop application conditions.

Results of all specimens tested in the second stage are summarized in Appendix D. In addition, results from first stage direct tension tests of double shear specimens shown in Appendix C-1 have been included in Appendix D-1 and Figure 1, as instrumentation methods and testing procedures used in all direct tension tests were identical. Because the instrumentation methods and procedures used to test creep and cyclic load specimens of the first and second stages varied, a direct comparison of those test results was not possible. The effectiveness of the coatings was evaluated on the basis of the overall test results from the direct tension, creep, and cyclic load tests.

ClibPDF - www.fastio.com

B. Important Research Parameters

The following were considered to be significant parameters in this research project:

1. Types of Contact Surface Preparation

In the second stage of testing three types of surface preparations were evaluated. These were (1) organic zinc-rich primer, (2) zinc metal applied by hot-dip galvanizing, and (3) bare blast cleaned steel. The bare blast cleaned steel specimens tested in both the first and second stages and the one specimen having tight mill scale tested in the first stage served as the controls for evaluation of the effectiveness of the specimens with the protective surface coatings tested in the second stage of this research project.

Organic zinc-rich primer: The primer used conformed to the Caltrans State Specification 8010-61J-36 for zinc-rich primer (see Appendix B-2). It was applied in varying thicknesses from 1 to 6 mils (25.4 to 152.4 μm) (dry film thickness) on ASTM A36 steel plates which had been blast cleaned previously with No. 20 Monterey sand. All painted steel plates were air dried for a minimum of 15 days before assembling. Paint hardness was measured prior to assembly. Steel plates having a paint coating with a dry film thickness of 6 mils (152.4 μm) were coated twice with the second coat being applied approximately 30 minutes after the first to avoid sagging of the paint.

Zinc metal applied by hot-dip galvanizing: Steel plates conforming to the specifications of ASTM A36 were hot-dip galvanized with zinc metal. Prior to hot-dip galvanizing, the plates were blast cleaned to remove the mill scale. The resulting thickness of zinc measured following galvanizing averaged 10 mils (254 μm) per surface.

ClibPDF - www.fastio.com

Blast Cleaning: Certain specimens were blast cleaned only so as to conform to the current Caltrans Standard Specifications, Section 55-3.14 (see Appendix B-2) which requires thoroughly cleaned contact surfaces of bolted connections. As in all instances where blast cleaning was done, a No. 20 mesh Monterey sand was used to produce a uniform anchor pattern profile between 1 and 2 mils (25.4 to 50.8 μm) on the steel plates.

2. Coating Hardness and Thickness

Two variables considered important to the behavior of structural joints were hardness and thickness of the coatings on the contact surfaces. For the specimens coated with organic zinc-rich primer, dry-film thicknesses ranged from 1 to 6 mils (25.4 to 152.4 μm). The zinc metal coating applied by hot-dip galvanizing averaged 10 mils (254 μm). Thickness measurements were made with an electronic instrument called an Accuderm, Model A-5, designed to measure non-magnetic coatings on magnetic base material. Thicknesses of coatings rounded to the nearest 0.5 mil (12.7 μm) on individual specimens are listed in Appendix D.

Hardness of the organic zinc-rich primer coatings used were measured by the pencil hardness test in accordance with ASTM Designation: D3363-74. Hardness of the organic zinc-rich primer coating was found to become maximum, + HB, after curing at 75°F (23.9°C) and 45% relative humidity for 3 days.

3. Variation in Bolt Preload

Variation in allowable preload of the 7/8-inch (22.2-mm) diameter A325 bolts was considered to be another important parameter which could affect slip characteristics and performance of the joint. Specimens were tested using two different bolt preloads, one at the specified minimum tension of approximately 39 kips (173.5 kN) and the other at a high tension of approximately 54 kips (240.2 kN),

ClibPDF - www.fastio.com

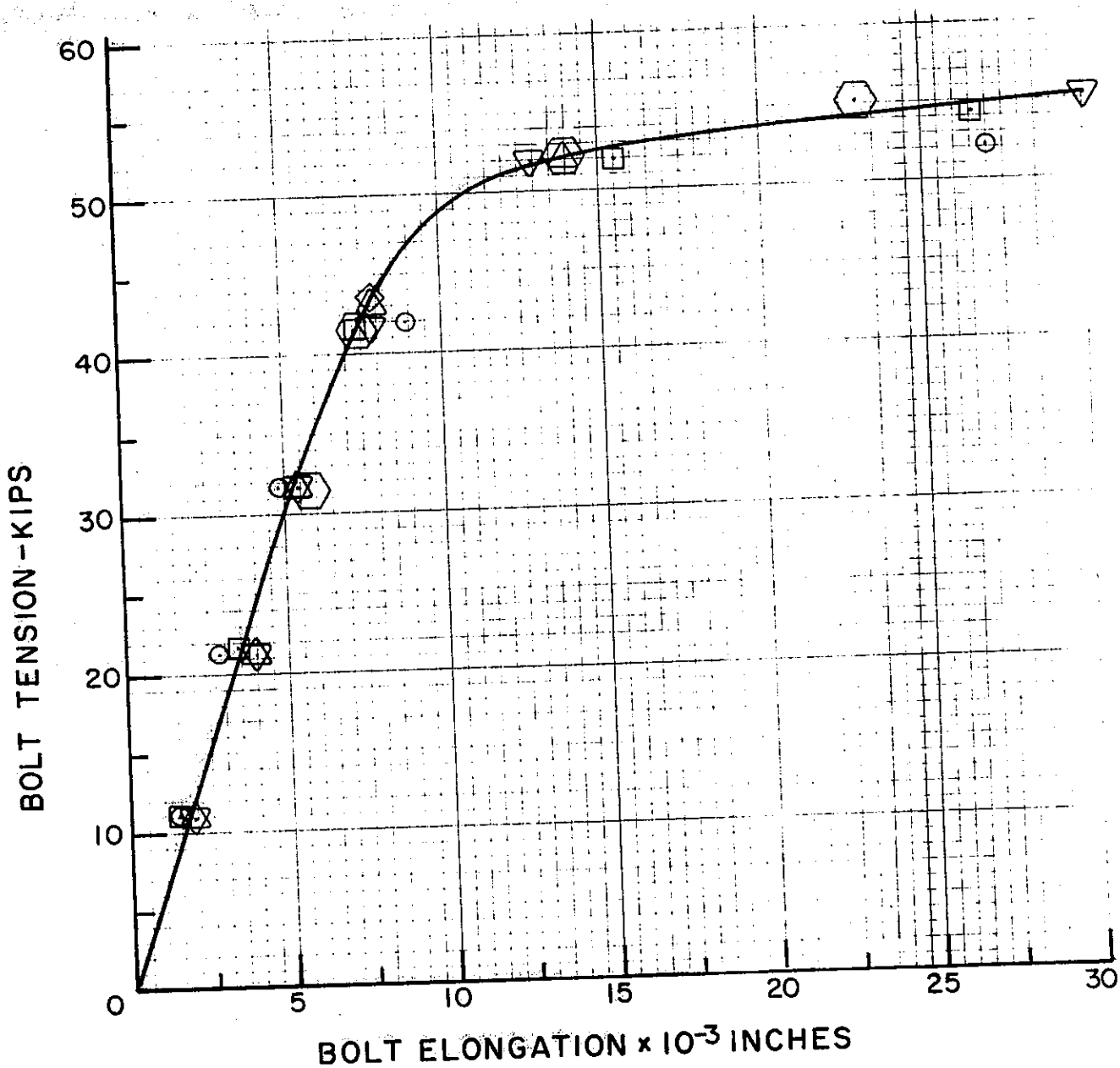

Note:
1"(inch) = 25.4 mm
1 kip = 4.45 kN

Figure 2. Average Tension VS Elongation Curve for a Sample of Ten ASTM A325 7/8" x 3 1/4" Bolts.

ClibPDF - www.fastio.com

which is near the ultimate capacity of the bolt. These tensions were indirectly achieved in bolts used in the assembly of the test specimens by measuring and regulating bolt elongation as bolts were being tensioned. Elongations of 0.007 inches (177.8 μm) and 0.020 inches (508.0 μm), which provided bolt tensions of 39 kips (173.5 kN) and 54 kips (240.2 kN) respectively, were determined from a bolt tension versus elongation curve, shown in Figure 2. This curve was developed during the preliminary testing program. These elongations were achieved by periodically measuring elongations of bolts with a "C" frame extensometer, shown in Figure 6, as bolts were being tensioned. Measuring techniques are discussed further in Section IV.C.2 (page 18 of this report).

C. Specimen and Test Apparatus Description

1. Specimen Design and Fabrication

Specimens for preliminary tests were both of the double and single shear design. The single shear specimens were fabricated from channel sections as shown in Figures 3 and 4. The specimens used for some of the preliminary tests, and used exclusively for all tests of the second stage of the testing program, were of the double shear design. Plate thicknesses and general dimensions of the double shear specimens are shown in Figure 5. Plates were flame cut from steel plate conforming to requirements in the ASTM Specification A36. Holes for the 7/8-inch (22.2 mm) diameter high strength bolts were carefully aligned and drilled 1/8 inches (3.17 mm) oversize [1-inch diameter (25.4 mm) holes] to insure that loads applied to the specimens would be transmitted through friction of the plates, and not by bolt shear and bearing.

Any burrs along the edges of these plates were removed by filing prior to any sandblasting, painting, or assembly.

ClibPDF - www.fastio.com

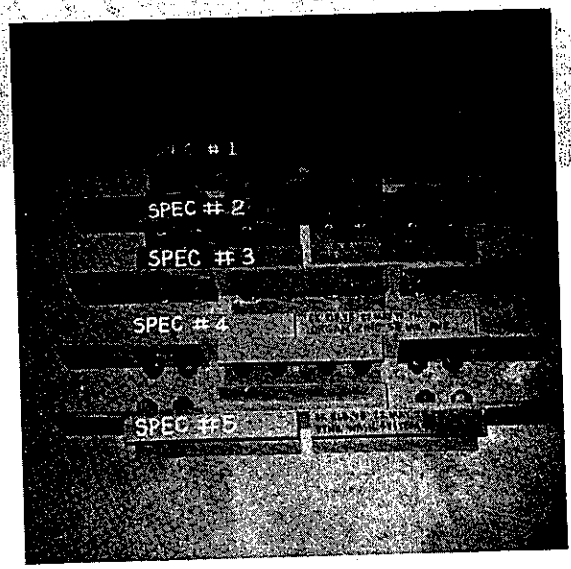

Figure 3A.

Assembled Single Shear Specimens Prior to Testing.

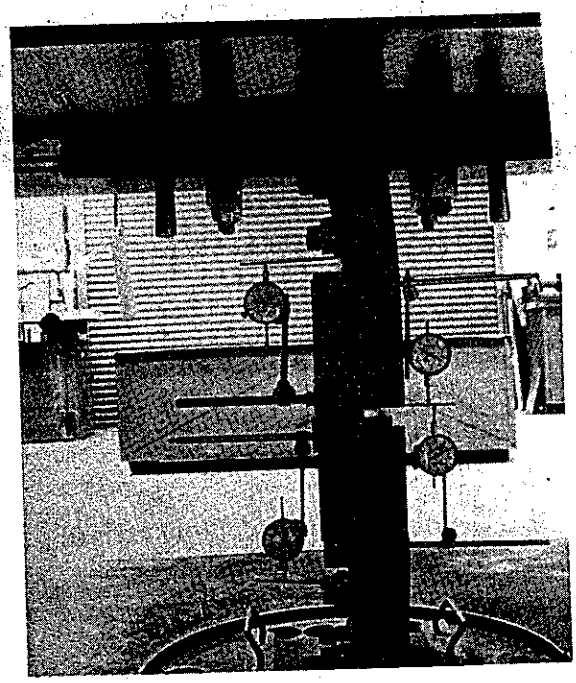

Figure 3B.

Single Shear Specimen Installed in Universal Testing Machine.

ClibPDF - www.fastio.com

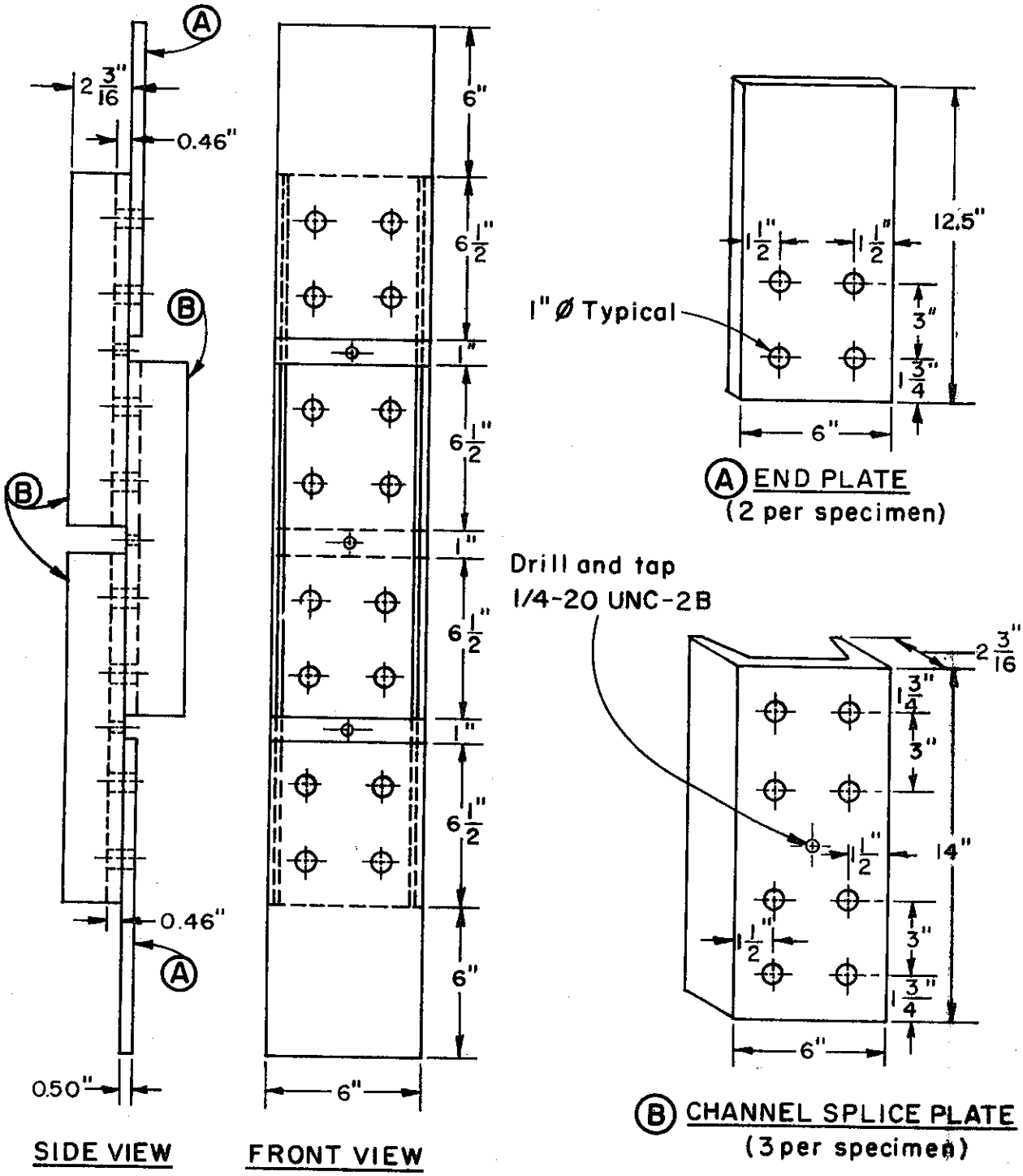

Notes:

1. 1" (inch)=25.4 mm
2. Steel conforms to requirements in ASTM Specification: A36

Figure 4. Typical Single Shear Joint Specimen.

ClibPDF - www.fastio.com

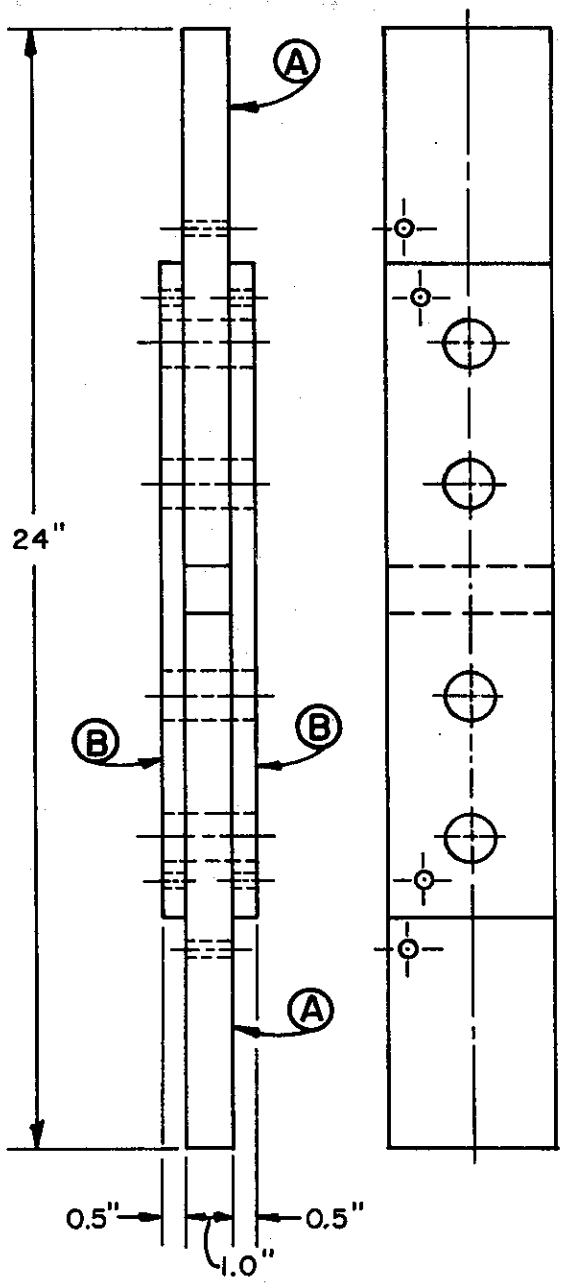

SIDE VIEW FRONT VIEW

Assembled Specimen

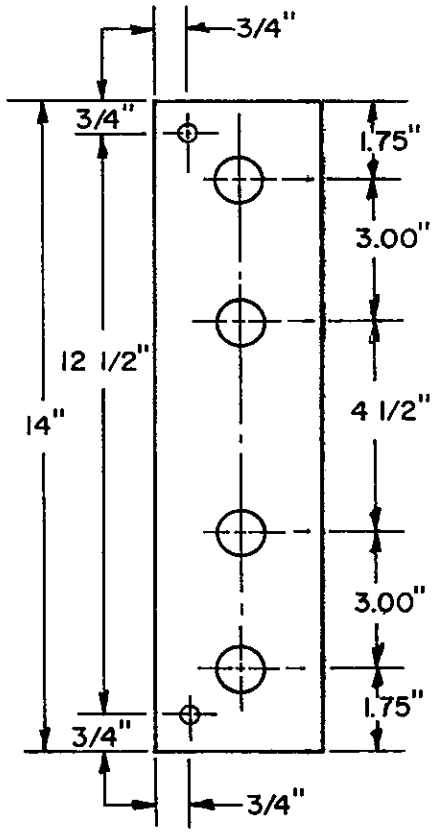

B SIDE PLATE
(2 per specimen)

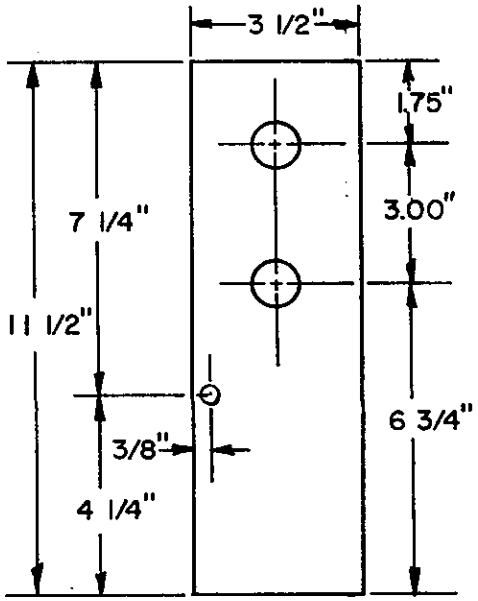

A END PLATE
(2 per specimen)

Notes:

1. 1"(inch)=25.4 mm
2. All steel plates conform to requirements in ASTM Specification: A 36.
3. All small holes tapped with 1/4 -20 UNC-2B threads.

Figure 5, Typical Details of a Double Shear Joint Specimen.

ClibPDF - www.fastio.com

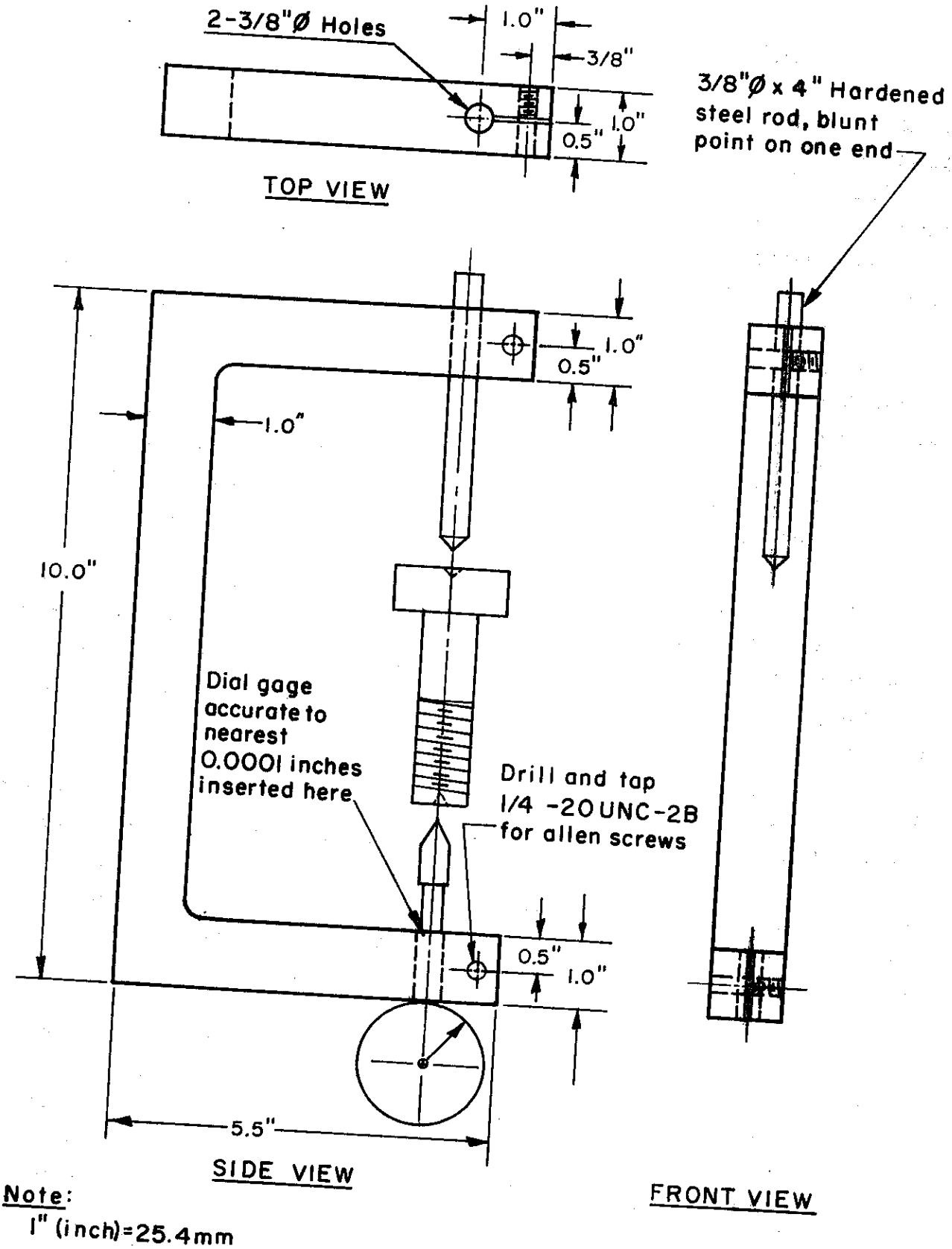

Note:
1" (inch)=25.4mm

Figure 6. "C" Frame Extensometer Used to Measure Bolt Elongations.

ClibPDF - www.fastio.com

2. Determination and Control of Bolt Preload

Considerable preliminary work was done in an attempt to find practical means of determining the bolt tension accurately and consistently. Unsuccessful methods included development of a torque/tension relationship by comparing actual bolt tension obtained using a Norbar bolt load meter with (1) torque from a calibrated torque wrench, (2) strain from a Lebow bolt force sensor, and (3) and the turn-of-nut method. The most successful method by which consistent tension readings were obtained was measuring bolt elongation with a "C" frame extensometer, shown in Figure 6. Bolts were center punched in the middle of each end and then initial length readings were made using the "C" frame extensometer with a dial gage accurate to the nearest 0.0001 inch (2.54 μm) and having a spring loaded pointed probe.

As each bolt was tightened, changes in elongation were measured, using the "C" frame extensometer and the center punched points as measuring reference marks. When the desired bolt elongation was obtained, indicating proper bolt tension, tightening of the bolt was completed.

Three different lots of ASTM A325 black bolts, 7/8 inches (22.2 mm) in diameter by 3 1/4 inches (82.6 mm) long having a grip length of approximately 2 1/8 inches (28.6 mm) including one washer under the nut, were used in the research project. Tension and elongation readings were plotted for ten bolts selected at random and an average curve was drawn through plotted points. From the average curve, shown in Figure 2, it was determined that elongations of 0.007 inches (177.8 μm) and 0.020 inches (508.0 μm) represented bolt preloads of 39 kips (173.5 kN) and 54 kips (240.2 kN) respectively. These two bolt tensions were used throughout the research project and represent the lower and upper bolt tensions in the acceptable tension range normally required for 7/8-inch (22.2-mm) diameter A325 bolts.

ClibPDF - www.fastio.com

A high degree of accuracy in measured bolt preload at the 54 kip (240.2 kN) bolt tension level was experienced, as at that load level the bolt is stressed well beyond the elastic limit and a wide variation in bolt elongation is possible without causing a significant change in tension in the 7/8-inch (22.2-mm) diameter A325 bolts.

3. Assembly Techniques

All specimens used in the main testing program were assembled using the same techniques, and were identical in appearance and design, with exception of contact surface treatments.

Prior to assembly, surfaces of all steel plates were inspected for any warpage or burrs. A pencil hardness test, ASTM Designation: D3363-74, was used to determine coating hardness on those specimens which were painted. The initial lengths of all high strength bolts were measured and recorded. Bolts were then centered in the holes of the plates to avoid any bearing on the sides of the holes so that relative plate slip could be accurately measured. Hardened washers were placed underneath the nut on each bolt. Bolt elongation was carefully monitored as the bolts were slowly tightened to insure that proper tension was achieved. Final lengths of bolts were checked to verify correct preload.

4. Description of Instrumentation

a. Tension Tests

In all direct tension tests, two Bourns potentiometers were mounted, one on each end of a 1/2 inch x 3 1/2 inch x 14 inch (12.7 mm x 88.9 mm x 355.6 mm) side plate as shown in Figure 7. Two stop brackets were mounted, one on each 1-inch (25.4-mm) thick steel center plate so that relative movement between the center

ClibPDF - www.fastio.com

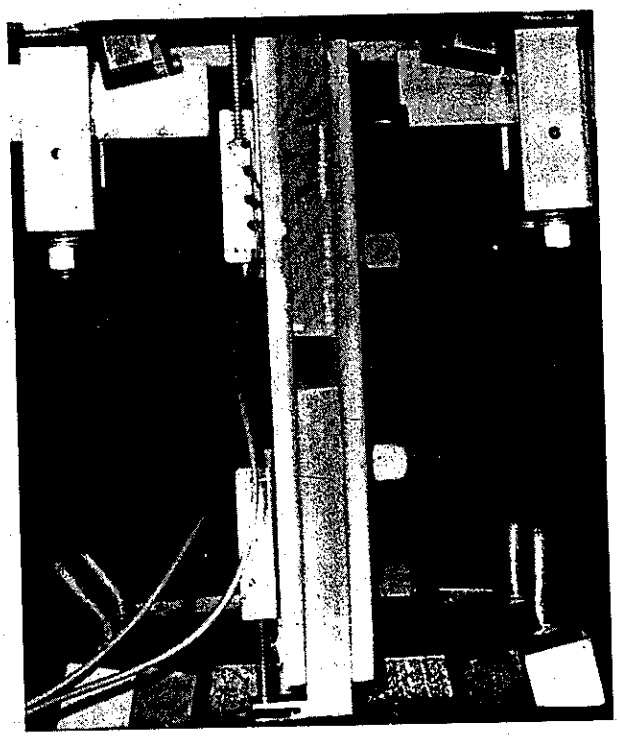

a. Side View

Figure 7.

Direct Tension, Double Shear Specimen Installed in Testing Machine.

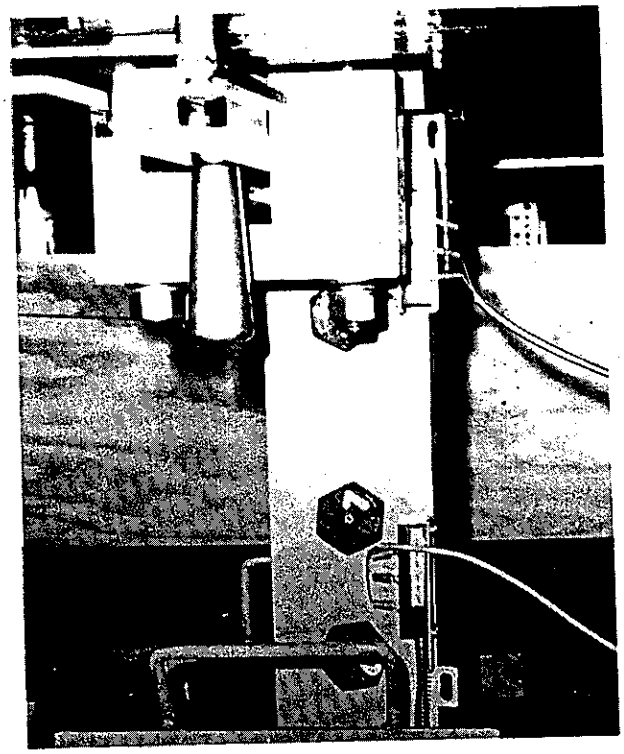

b. Front View

ClibPDF - www.fastio.com

and side plates could be measured. Continuous plots of load versus relative movement between one side plate and both center plates were made during each tension test using a XYY dual stylus plotter.

b. Creep and Cyclic Tests

In preliminary testing of creep and cyclic load specimens, reference points for measuring relative movement between side and center plates were different than those chosen for the main testing program. Dial gages were attached at one point in the center of the specimen with a magnetic base in preliminary testing as shown in Figure 8. To reduce the amount of elastic movement measured in specimens tested during the main testing program, dial gages were attached at each of the ends of one side plate on each creep and cyclic load specimen (see location of small holes at both ends of side plates shown in Figure 5). Because of this variation in the method of measuring specimen slip, results from creep and cyclic tests performed in the preliminary and main testing programs were not compared and are listed separately in Appendices C and D.

Both creep and cyclic specimens were instrumented similarly to tension specimens, except that instead of Bourns potentiometers, two dial gages were used. Relative movement was recorded by manual readings taken to the nearest 0.0001 inch (2.54 μm).

5. Test Apparatus Description

For testing both creep and cyclic specimens, an MTS Universal testing machine with a 70-kip (311.4-kN) load capacity was utilized. For specimens tested in direct tension, a 1 million pound (4.45 MN) MTS Universal testing machine was employed. In Figure 9, a typical specimen is shown installed in the 70-kip (311.4-kN) testing machine.

ClibPDF - www.fastio.com

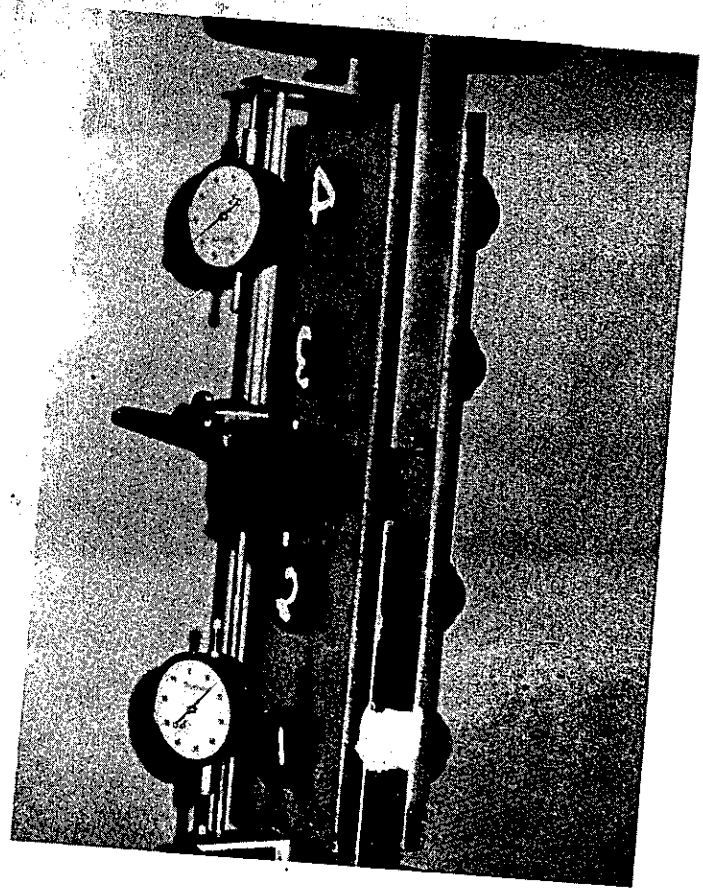

Figure 8.

Typical Creep/Cyclic Double Shear Specimen From Preliminary Tests Installed in Testing Machine.

ClibPDF - www.fastio.com

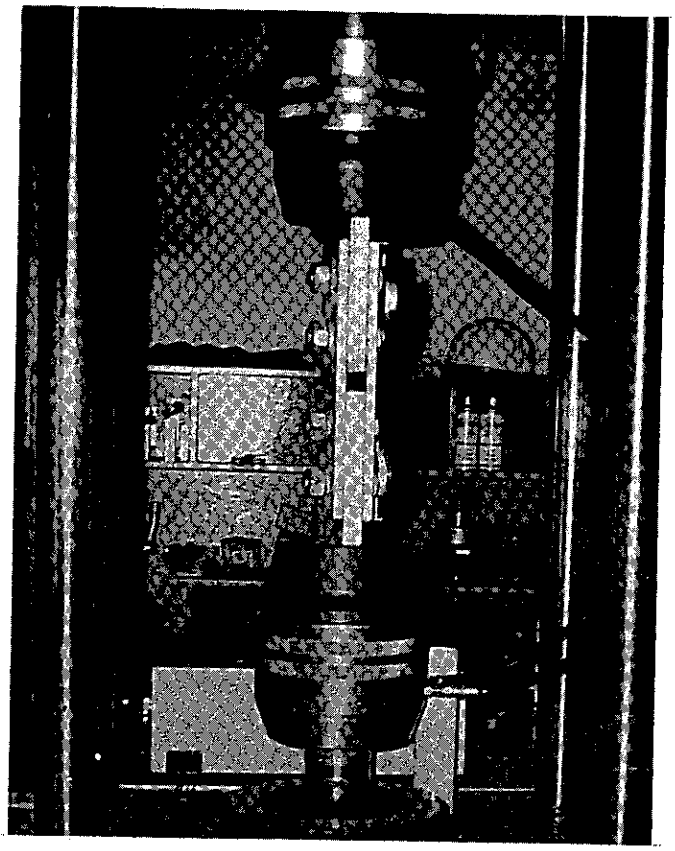

Figure 9.

Typical Creep/Cyclic Double Shear Specimen From Second Stage Tests Installed in Testing Machine.

ClibPDF - www.fastio.com

D. Testing Procedures

1. Tension Tests

Double shear specimens were inserted in an MTS universal testing machine with a tensile load capacity of 1 million pounds (4.45 MN). A grip pressure of 3000 pounds (13.3 kN) was used to hold the ends of the specimens while applying the tensile load. Prior to final adjustments of plotter pens on the XYY recorder, a small initial tensile load was applied to each specimen to eliminate effects from loose fitting testing machine parts. The tensile load was applied at a rate of 10 kips (44.5 kN) per minute and plots of applied load versus relative slip between the instrumented side plate and both center plates of each specimen were recorded. Tension tests were terminated following a gross relative slip between both upper and lower center plates and the instrumented side plate.

2. Creep Tests

In all creep tests conducted, specimens were positioned in an MTS Universal testing machine with a tensile load capacity of 70,000 pounds (311.4 kN). Beginning with a sustained tensile load of 32.4 kips (144.1 kN) or 100% of the allowable design load for these test specimens as permitted by AASHTO in 1973, specimens were loaded for a period of approximately 100 hours, or until significant creep occurred. Note that the allowable design load as used throughout this report is the load as determined by the allowable shear stress transmitted by the bolts through the joint. Following the initial 100 hours of sustained load at 32.4 kips (144.1 kN), the load was increased and maintained for another 100 hours, or until significant creep had occurred. Periodically while the specimen was stressed at each different load level, deflection measurements were made from both dial gages and creep was determined. Load levels of 32.4 kips (144.1 kN) [100% of AASHTO allowable shear

ClibPDF - www.fastio.com

stress for A325 bolts in friction joints], and 48.6 kips (216.2 kN) [150% of allowable bolt shear stress] were commonly used in all creep and cyclic tests. In some of the early creep tests in the second stage of the testing program, specimens were also tested at other load levels, including 40.5 kips (180.1 kN) [125% of allowable design] and in one instance 56.7 kips (252.2 kN) [175% of allowable design]. Testing at these additional load levels was later deemed unnecessary and discontinued. Creep test results from the second stage tests are summarized in Appendix D-2.

3. Cyclic Loading Tests

Cyclic testing was performed using the same MTS universal testing machine as was used in previously described creep tests. A sinusoidal load pattern with full reversal was used for all cyclic tests. An initial maximum and minimum applied load of ± 32.4 kips (144.1 kN) at 0.5 cycles per second was used for approximately 100,000 cycles or 0.005 inches (127.0 μm) of slip, whichever occurred first. If no slip or slip less than 0.005 inches (127.0 μm) occurred during the first 100,000 cycles, specimens were tested with the load range increased to ± 48.6 kips (216.2 kN) for an additional 100,000 cycles or until at least 0.005 inches (127 μm) of slip had occurred. Readings were taken periodically during various cycles at the maximum positive load, the maximum negative load and at the zero load of each chosen cycle.

E. Data Reduction Procedures

1. Tension Tests

A typical plot of load versus relative deflections made for each tension test specimen by the XYY recorder during testing is shown in Figure 10. Two different traces which show the relationship between external load and the relative movement between each 1-inch (25.4-mm) thick center plate and one 1/2-inch (12.7-mm) thick side

ClibPDF - www.fastio.com

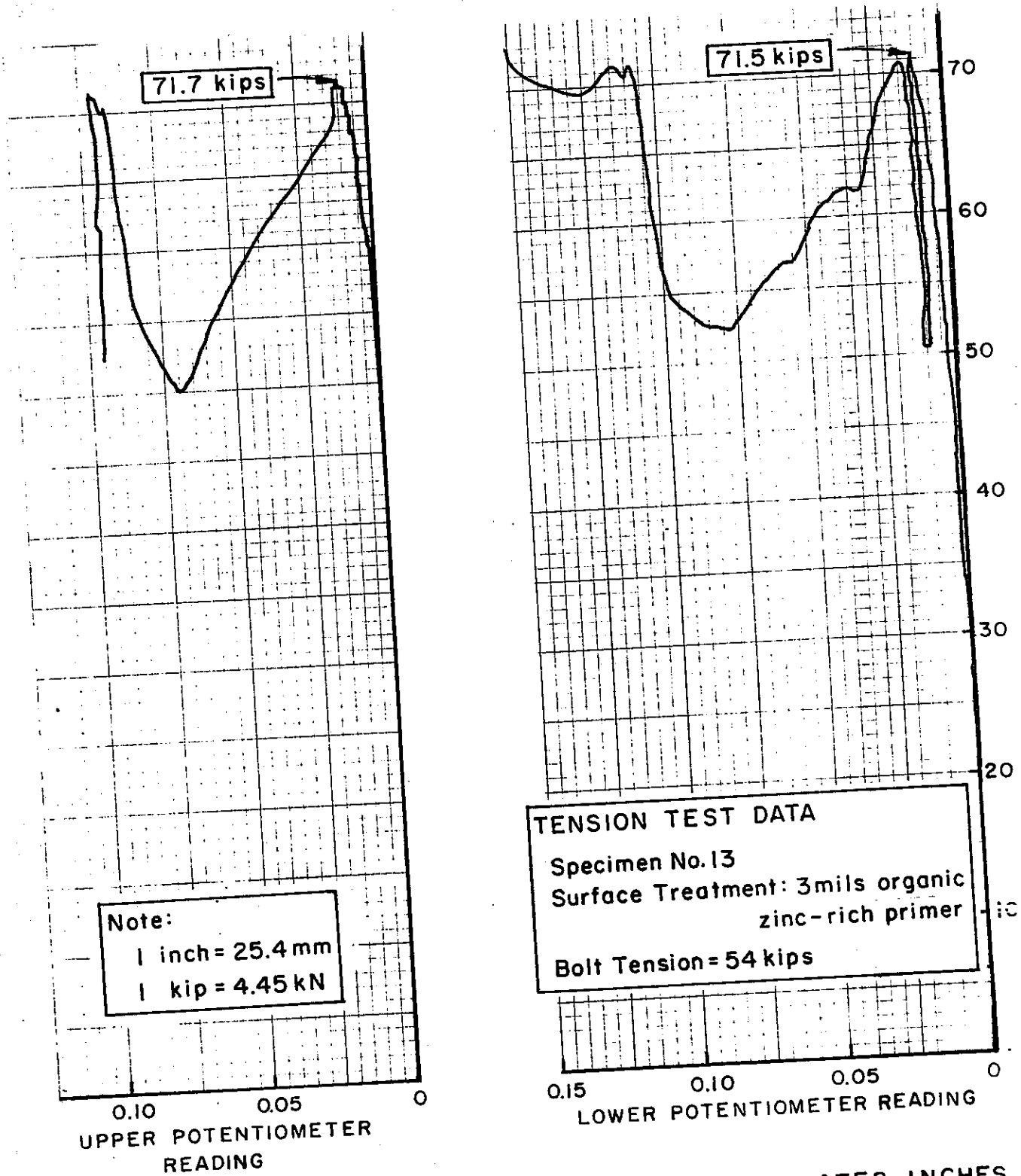

Figure 10. Typical Plots from Tension Test of Double Shear Specimen.

ClibPDF - www.fastio.com

plate appear on each plot. The point at which gross or sudden slip occurred was read from each trace and then the two values were averaged. The following formula was used to determine the slip coefficients, K, for specimens tested in both the first and second stages in this report:

$$K = P/nbT$$

Where P = the average slip load, kips
n = the number of slip planes (2)
b = number of bolts per slip plane (2)
T = the clamping force per bolt, kips

2. Creep Tests

Dial gages mounted at the upper and lower ends of creep specimens were periodically read and then values were averaged to yield mean slips for a continuous loading period of approximately 100 hours. Mean slips measured near 100 hours of creep are listed in Appendix D-2 for all second stage creep tests.

3. Cyclic Tests

Readings were taken from top and bottom dial gages during a cyclic period near the beginning, periodically between, and at the end of each 100,000 cycles of second stage testing. From the data, relative movements between plates and shifts in plate positions determined at zero loads were calculated. For a detailed explanation of how the relative movements were obtained, see sample calculations in Appendix D-3.

Mean deflections for a given cycle were calculated from both top and bottom dial gage readings made at the maximum positive and negative loads during two different cycles, one near the beginning

ClibPDF - www.fastio.com

of testing and one near the end of each 100,000 cycle period. Also top and bottom dial gage readings made at the point of zero load during each of the cycles described above were compared to determine significant relative movement of plates.

ClibPDF - www.fastio.com

dry film coating thickness between 1.5 and 6 mils (38.1 and 152.4 μm). From the data shown in Appendix D-3 the following comments can be made:

- The amount of movement (slip and elastic elongation) between the maximum positive load and maximum negative load of one cycle measured after the first 100,000 cycles of testing was small and nearly the same for all specimens tested under similar external loads and having both minimum and high bolt preloads and ranged from between 0.0005 and 0.0039 inches (12.7 and 89.1 μm).

- A shift in the zero load reading seems to be the best indication of approaching specimen failure or gross slip. In one of the specimens, ID No. OZ-6C2 painted with 6 mils (152.4 μm) dry film thickness of organic zinc-rich primer, gross slip failure occurred at an externally applied cyclic load of ± 48.6 kips (216.2 kN) after the specimen had been subjected to 167,300 cycles at ± 32.4 kips (144.1 kN). A large shift in zero load reading of 0.0162 inches (411.5 μm) was recorded previous to specimen failure. A similar specimen, OZ-6C1 painted with 6 mils (152.4 μm) of organic zinc-rich primer, also showed a large shift, 0.0119 inches, (302.3 μm) in the zero load reading after cycling for 90,305 cycles at 32.4 kips (144.1 kN) and 101,900 cycles at 48.6 kips (216.2 kN), although the specimen did not completely fail.

- All specimens coated with between 1 and 3 mils (25.4 and 76.2 μm) of organic zinc-rich primer performed well under all cyclic load tests at both bolt preloads, showing little slip movement or shifts in plate positions measured at zero loads.

- A significant average reduction of bolt elongation of 0.002 inches (50.8 μm) per bolt, resulting in an average bolt tension loss of 10 kips (44.5 kN) or 25% of the original bolt tension

ClibPDF - www.fastio.com

of 39 kips (173.5 kN), was measured at the completion of cyclic tests in the bolts of the three specimens coated with 6 mils (152.4 μm) of organic zinc rich primer. Specimens coated with 3 mils (76.2 μm) or less of the zinc primer showed negligible losses in bolt tension.

No cyclic tests were performed on specimens which had been galvanized. It is suspected, however, that such specimens, having short bolt lengths and somewhat irregular galvanized surfaces, might exhibit similar losses in bolt preloads.

B. The Effect of Varying Bolt Tension on Slip Characteristics

From slip coefficients calculated using results of direct tension tests and the formula shown in Figure 1, it can be seen that as bolt preload increases the slip load increases also, but at a lesser rate; this in effect resulted in a decreased slip coefficients at the higher bolt tension.

Creep test results indicate that at loads equal to 100% of the specimen design load for all coated specimens, there was little difference in creep after 100 hours of testing for both of the bolt tensions tested. At a sustained load equal to 150% of the specimen design load, however, the mean slip of specimens with bolt tensions of 54 kips (240.2 kN) were in general less than those of specimens with bolt tensions of 39 kips (173.5 kN).

Because of the few cyclic tests conducted at the 54 kips (240.2 kN) bolt tension level, few conclusions can be drawn. One important observation, however, should be mentioned. In specimens coated with a dry film thickness between 1 and 3 mils (25.4 and 76.2 μm) of organic zinc-rich primer, practically no difference existed in the deflection range average or in the shift in the zero load reading between specimens having bolt tensions of 39 and 54 kips (173.5 and 240.2 kN).

ClibPDF - www.fastio.com

C. The Effect of Coating Properties and Type on Slip Behavior

In this research program, only two types of coatings, zinc metal applied by hot-dip galvanizing and organic zinc-rich paint, were evaluated. Although none of the coatings tested performed as well as bare sandblasted steels, the zinc metal coating applied by hot-dip galvanizing had the best resistance to slip under direct tension loading of all of the coatings tested. Although the specimens coated with zinc metal had relatively high slip coefficients, between 0.40 and 0.46, when compared with those of the organic zinc-rich primer tested, between 0.29 and 0.41, the extensive wire brushing or light sandblasting necessary to produce a satisfactory slip surface was deemed to be bothersome and expensive. In addition the thickness and quality of the galvanized zinc layer, factors which are felt to affect slip characteristics greatly, are very difficult, if not impossible to control. In creep tests, the galvanized specimens in which a bolt tension of 39 kips (173.5 kN) was used and subjected to a sustained tensile load of 48.6 kips (216.2 kN) showed nearly 7 times the amount of creep as those specimens coated with 3 mils (76.2 μm) of organic zinc-rich primer. The galvanized test specimens, however, fully met the criteria established for this project of less than 0.005 inches (127 μm) of creep in 100 hours of sustained load of 32.4 kips (144.1 kN) or 100% of the specimen design load.

The specimens coated with a dry film thickness of 3 mils (76.2 μm) or less of organic zinc-rich primer showed good resistance to slip in all tests, including direct tension, creep, and cyclic loading. Thicker coatings of the organic zinc-primer, as explained later in Section V.D. did not perform as well, especially in cyclic load tests.

In addition, the organic zinc-rich primer tested, which conformed to the Caltrans 1977 Standard Specification 8010-61J-36, could be applied easily and showed no signs of mud cracking or uneven painted

ClibPDF - www.fastio.com

surfaces experienced by Caltrans in the past with inorganic zinc paints. The primer cured to a maximum pencil hardness as determined by ASTM Designation: D3363-74, of + HB after three days in an ambient temperature of 75°F (23.9°C) and relatively humidity of 45%.

It was interesting to note the relatively small contact area which was actually in bearing around the bolt hole. This area is shown clearly in Figure 11 which depicts the 1/2-inch (12.7-mm) thick side plates from two typical specimens, having identification numbers 13 and P6, disassembled after testing. The actual plate contact area around each bolt through which the entire external load was transmitted in shear is equal to approximately 1.76 square inches (1135 mm^2). The coating in this region thus was subjected to an average compressive stress between 22.2 and 30.7 ksi (153.1 and 211.7 MPa) depending on the actual bolt tension, in addition to the simultaneous shear stress which varied according to the externally applied load.

Specimen 5 DS, coated with 6 mils (152.4 μm) of organic zinc-rich primer, is shown disassembled in Figure 12 following a direct tension test. Typical rings indicating a highly stressed coating in the doughnut-shaped area surrounding the bolt holes are even more obvious with thicker coatings of the organic zinc-rich primer.

The vinyl wash primer tested in the first phase of this research study performed poorly in direct tension tests. It had a slip coefficient of K = 0.19 and was very soft. Testing of this coating was immediately discontinued.

D. The Effect of a Variation in Coating Thickness on Slip Behavior.

Evaluation of test specimens on the basis of coating thickness was limited to those painted with from between 1 and 6 mils

ClibPDF - www.fastio.com

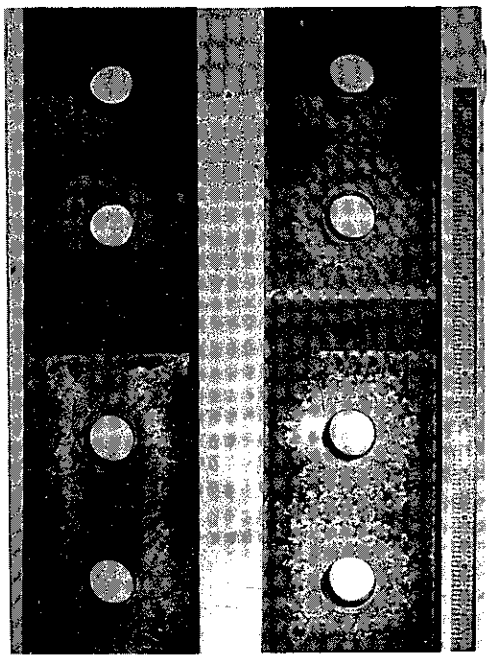

Figure 11.

Side Plates from Disassembled Test Specimens Coated With Organic Zinc-Rich Primer Showing Highly Stressed Contact Areas Surrounding Bolt Holes.

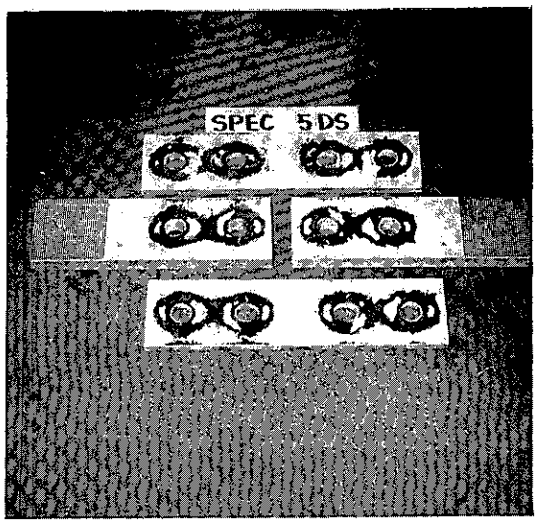

Figure 12.

Parts of Disassembled Tension Specimen Coated With 6 Mils of Organic Zinc Rich Primer Following Test. Dark Rings Show Contact Areas.

ClibPDF - www.fastio.com

(25.4 and 152.4 μm) of organic zinc-rich primer as described in Section V.C. of this report.

From tensile tests conducted on specimens coated with the organic zinc-rich primer, an average decrease in the slip coefficient of approximately 13% was noticed because of an increase in from 1 to 6 mils (25.4 to 152.4 μm) of dry film thickness.

Little difference was noticed between slip observed in all specimens coated with 3 mils (76.2 μm) or less of organic zinc-rich primer. A large increase in slip, however, was recorded in specimens coated with 6 mils (152.4 μm) of zinc-rich primer. From cyclic test results, it is also apparent that the shift in zero load readings for 6-mil (152.4-μm) specimens was considerably larger than for specimens coated with up to 3.5 mils (88.9 μm) of organic zinc-rich primer. Thus in summary, a dry-film coating thickness range of organic zinc-rich primer of 1 to 3 mils (25.4 to 76.2 μm) appears to produce slip properties in friction-type connections which are most desirable and are acceptable.

ClibPDF - www.fastio.com

VI. REFERENCES

1. ASCE, "Bibliography on Bolted Structural Joints", Manuals and Reports on Engineering Practice, No. 48, 1967.

2. Birkemoe, P. C., Couch, W. D., Munse, W. H., "Design Criteria for Joining Galvanized Structurals", International Lead Zinc Research Organization, Inc., April 1968.

3. Birkemoe, P. C., et al, "Design Criteria for Joining Galvanized Structurals", International Lead Zinc Research Organization, Inc., April 1969.

4. Brookhart, G. C., Siddigi, I. H., Vasarhelyi, D. D., "The Effect of Galvanizing and Other Surface Treatments on High Tensile Bolts and Bolted Joints", Department of Civil Engineering, University of Washington, Seattle, September 1966.

5. Brookhart, G. C., Igtidar, H. S., and Vasarhelyi, D. D., "Surface Treatment of High Strength Bolted Joints", Journal of the Structural Division, ASCE, Vol. No. ST3, March 1968.

6. Fisher, J. W. and Struik, J. H., "Guide to Design Criteria for Bolted and Riveted Joints, 1974, John Wiley and Sons, Inc.

7. Fisher, J. W., Beedle, L. S., "Bibliography on Bolted and Riveted Structural Joints", Fritz Engineering Laboratory Report No. 302.1, Lehigh University, December 1964.

8. Fisher, J. W., et al, "Supplement to Bibliography on Bolted and Riveted Structural Joints", Fritz Engineering Laboratory Report No. 302.2, Lehigh University, February 1966.

ClibPDF - www.fastio.com

References (Continued)

9. Geoffrey D. B., Lewis, C. S., et al, "Sustained and Fluctuating Loading on Bolted Joints", Journal of the Structural Division, ASCE, ST10, October 1973, pp. 2123-2141.

10. Hopkins, D., Stoker, J. R., and Nordlin, E. F., "A Literature Search on the Effect of Coatings on Faying Surfaces of High Strength Bolted Joints", California Division of Highways, September 1971.

11. Kennedy, D. J., "High Strength Bolted Galvanized Joints", Proceedings of the ASCE, Structural Division, pp. 2723-2738, December 1972.

12. Lee, J. H., O'Conner, C. Fisher, J. W., "Effects of Surface Coatings and Exposure on Slip Behavior of Bolted Joints", Fritz Engineering Laboratory Report 318.5, Lehigh University, June 1968.

13. Lobb, Verl and Stroller, Floyd, "Bolted Joints Under Sustained Loading", Journal of the Structural Division, ASCE, Vol. 97, ST3, March 1971.

14. Lobb, Verl, "Low-Frequency Low-Level Stress Reversal on an Assembly of Bolted Joint Specimens", JPL Space Programs Summary 37-65, Vol. 11, pp. 77-81.

15. Munger, C. G., "Inorganic Zinc Coatings - Past, Present, and Future, Materials Performance, pp. 25-29, May 1975.

16. Munse, W. H., "Static and Fatigue Tests of Bolted Connections Coated with Dimetcote", Report for Amercoat Corporation, March 10, 1961.

ClibPDF - www.fastio.com

References (Continued)

17. Munse, W. H., "Static and Fatigue Tests of Bolted Connections Coated with Rust-Ban 191", Report for Enjay Chemical Company, June 9, 1967.

18. Munse, W. H., "Static and Fatigue Tests of Bolted Connections Coated with Dimetcote", Corrosion Control Recorder, Summer 1968.

19. Munse, W. H., Birkemoe, P. C., "High-Strength Bolting of Galvanized Connections", Australian Institute of Steel Construction and Australian Zinc Development Association, 1969.

20. Munse, W. H., "The Case for Bolted Galvanized Bridges", American Hot Dip Galvanizers Association, Inc., April-May 1971.

21. Research Council on Riveted and Bolted Structural Joints, "Specifications for Structural Joints Using ASTM A325 or A490 Bolts", September 1, 1966.

22. Research Council on Riveted and Bolted Structural Joints, "Specifications for Structural Joints Using ASTM A325 or A490 Bolts", March 31, 1970.

23. Research Council on Riveted and Bolted Structural Joints, "Specifications for Structural Joints Using ASTM A325 Bolts", February 4, 1976.

24. State of California, Department of Transportation, Standard Specifications, January 1978.

25. Vasarhelyi, D. D., and Chiang, K. C., "Coefficient of Friction in Joints of Various Steels", Journal of the Structural Division, ASCE, Vol. ST4, August 1967, pp. 227-243.

26. Vasarhelyi, D. D., et al, "Effects of Fabrication Techniques", ASCE Transactions, Vol. 126, 1961, Part II.

ClibPDF - www.fastio.com

VII. APPENDICES

A. Excerpts from Specifications for "Structural Joints Using ASTM A325 or A490 Bolts".

B. Excerpts from State of California Department of Transportation "Standard Specifications - January 1978".

C. Summary of First Stage Tension, Creep, and Cyclic Load Test Results.

D. Summary of Second Stage Tension, Creep, and Cyclic Load Test Results.

ClibPDF - www.fastio.com

3 Bolted Parts

(a) The slope of surfaces of bolted parts in contact with the bolt head and nut shall not exceed 1:20 with respect to a plane normal to the bolt axis. Bolted parts shall fit solidly together when assembled and shall not be separated by gaskets or any other interposed compressible material. Holes may be punched, subpunched and reamed, or drilled, as required by the applicable code or specification and shall be a nominal diameter not more than 1/16 in. in excess of the nominal bolt diameter.

(b) When assembled, all joint surfaces, including those adjacent to the bolt heads, nuts or washers, shall be free of scale, except tight mill scale, and shall also be free of burrs, dirt and other foreign material that would prevent solid seating of the parts.

(c) Contact surfaces within *friction-type* joints shall be free of oil, paint, lacquer or galvanizing.

4 Allowable Working Stresses

(a) *Design Stresses.* The allowable working stresses for A325 and A490 bolts specified in the following paragraphs are given, respectively, for bridges and buildings in Table 2. As used in paragraphs (b) and (c), nominal bolt area is defined as the area corresponding to the nominal diameter of the bolt.

Table 2 Allowable Working Stresses for Fasteners[a]

Specification Paragraph	Loading Conditions	ASTM A325 Bolts		ASTM A490 Bolts	
		Bridges	Buildings	Bridges	Buildings
4(b)	Applied tension, psi	36,000	40,000	48,000[b]	54,000[b]
4(c)	Shear, psi				
	1. Friction-type connection	13,500	15,000	18,000	20,000
	2. Bearing-type connection, shear plane through threads	13,500	15,000	20,000	22,500
	3. Bearing-type connection, threads excluded	20,000	22,000	29,000	32,000
4(d)	Bearing, psi[c]	$1.22\,F_y$	$1.35\,F_y$	$1.22\,F_y$	$1.35\,F_y$

[a] The tabulated stresses, except for bearing stress, apply to bolts used in any grade of steel.
[b] Static loading only.
[c] F_y = Specified minimum yield point of the lowest strength connected part. The bearing stress shall not be more than the specified minimum tensile strength of the lowest strength connected material.

Appendix A-1. Excerpt from "Specification for Structural Joints Using ASTM A325 or A490 Bolts", approved by the Research Council on Riveted and Bolted Structural Joints of the Engineering Foundation, September 1, 1966.

ClibPDF - www.fastio.com

Table 2 Allowable Working Stresses for Fasteners[a]

Specification Paragraph	Loading Conditions	ASTM A325 Bolts		ASTM A490 Bolts	
		Bridges	Buildings	Bridges	Buildings
4(b)	Applied tension, psi	36,000	40,000	48,000[b]	54,000[b]
4(c)	Shear, psi				
	1. Friction-type connection	13,500	15,000	18,000	20,000
	2. Bearing-type connection, shear plane through threads	13,500	15,000	20,000	22,500
	3. Bearing-type connection, threads excluded	20,000	22,000	29,000	32,000
4(d)	Bearing, psi[c]	$1.22\,F_y$	$1.35\,F_y$	$1.22\,F_y$	$1.35\,F_y$

[a] The tabulated stresses, except for bearing stress, apply to bolts used in any grade of steel.
[b] Static loading only.
[c] F_y = Specified minimum yield point of the lowest strength connected part. The bearing stress shall not be more than the specified minimum tensile strength of the lowest strength connected material.

(b) When assembled, all joint surfaces, including those adjacent to the bolt heads, nuts or washers, shall be free of scale, except tight mill scale, and shall also be free of burrs, dirt and other foreign material that would prevent solid seating of the parts.

(c) Contact surfaces within *friction-type* joints shall be free of oil, paint, lacquer or other coatings, except as listed below:

1. Hot-dip galvanizing, if contact surfaces are scored by wire brushing or blasting after galvanizing and prior to assembly.

2. Inorganic zinc rich paints as defined in those sections of the Steel Structures Painting Council Systems, SSPC PS 12.00, covering zinc rich paints with inorganic vehicles.

3. Metallized zinc or aluminum applied in accordance with AWS C2.2 Recommended Practice for Metallizing with Aluminum and Zinc for Protection of Iron and Steel, except that subsequent sealing treatments, described in Section IV therein, shall not be used.

Appendix A-2. Excerpts from "Specification for Structural Joints Using ASTM A325 or A490 Bolts", Approved by the Research Council on Riveted and Bolted Structural Joints of the Engineering Foundation, March 31, 1970.

ClibPDF - www.fastio.com

Table 2a Allowable Working Stresses,[a] ksi, Based Upon Surface Condition of Bolted Parts, for Friction-Type Shear Connections

Class	Surface Condition of Bolted Parts	Standard Holes		Oversize Holes and Short Slotted Holes		Long Slotted Holes	
		A325	A490	A325	A490	A325	A490
A	Clean mill scale	17.5	22.0	15.0	19.0	12.5	16.0
B	Blast-cleaned carbon and low alloy steel	27.5	34.5	23.5	29.5	19.5	24.0
C	Blast-cleaned quenched and tempered steel	19.0	23.5	16.0	20.0	13.5	16.5
D	Hot-dip galvanized and roughened	21.5	27.0	18.5	23.0	15.0	19.0
E	Blast-cleaned, organic zinc rich paint	21.0	26.0	18.0	22.0	14.5	18.0
F	Blast-cleaned, inorganic zinc rich paint	29.5	37.0	25.0	31.5	20.5	26.0
G	Blast-cleaned, metallized with zinc	29.5	37.0	25.0	31.5	20.5	26.0
H	Blast-cleaned, metallized with aluminum	30.0	37.5	25.5	32.0	21.0	26.5
I	Vinyl wash	16.5	20.5	14.0	17.5	11.5	14.5

[a] Values from this table are applicable *only* when they do not exceed the lowest appropriate allowable working stresses for *bearing-type* connections, taking into account the position of threads relative to shear planes and, if required, the 20% reduction due to joint length. (See Table 2.)

(b) When assembled, all joint surfaces, including those adjacent to the bolt heads, nuts or washers, shall be free of scale, except tight mill scale, and shall also be free of burrs, dirt, and other foreign material that would prevent solid seating of the parts. Paint is permitted unconditionally in *bearing-type* connections.

(c) The condition of contact surfaces in *friction-type* connections (Table 2a) shall conform to the following requirements, as applicable:

Classes A, B, and C (uncoated): Contact surfaces shall be free of oil, paint, lacquer, or other coatings.

Class D (hot-dip galvanized and roughened): Contact surfaces shall be lightly scored by wire brushing or blasting after galvanizing and prior to assembly.

Classes E and F (blast-cleaned, zinc rich paint): Contact surfaces shall be coated with organic or inorganic zinc rich paint as defined in the Steel Structures Painting Council System SSPC 12.00.

Classes G and H (blast-cleaned, metallized zinc or aluminum): Contact surfaces shall be coated in accordance with AWS C2.2 *Recommended Practice for Metallizing with Aluminum and Zinc for Protection of Iron and Steel,* except that subsequent sealing treatments, described in Section IV therein, shall not be used.

Class I (vinyl wash): Contact surfaces shall be coated in accordance with the provisions of the Steel Structures Painting Council Pretreatment Specification SSPC PT3.

Appendix A-3. Excerpts from "Specifications for Structural Joints Using ASTM A325 or A490 Bolts", approved by the Research Council on Riveted and Bolted Structural Joints of the Engineering Foundation, February 4, 1976.

ClibPDF - www.fastio.com

55–3.13 Painting.—All iron and steel surfaces shall be cleaned and painted in accordance with the provisions in Section 59, "Painting."

55–3.14 Bolted Connections.—Bolted connections unless otherwise shown on the plans or specified in the special provisions shall be made with high–strength steel bolts.

All connections made with high–strength bolts shall be friction–type joints, unless otherwise designated on the plans.

Bolted connections using high–strength steel bolts shall conform to the "Specifications for Structural Joints Using ASTM A 325 or A 490 Bolts," approved by the Research Council on Riveted and Bolted Structural Joints of the Engineering Foundation, and the following provisions:

Contact surfaces of all high–strength bolted connections shall be thoroughly cleaned of rust, mill scale, dirt, grease, paint, lacquer, or other material foreign to the steel, before assembly.

All bolts shall conform to ASTM Designation: A 325 and shall be installed with a hardened washer under the nut or bolt head, whichever is the element turned in tightening.

Bolts may be tightened by any method to the required tension. The torque value or the direct tension indicator gap needed to develop the required bolt tension will be determined by the Engineer. Bolt tension shall be checked at locations selected by the Engineer. Checking of bolt tension shall be done by the Contractor in the presence of the Engineer and in such a manner that the Engineer can read the torque wrench gage or direct tension indicator during checking.

Nuts shall be located, wherever practicable, on the side of the member which will not be visible from the traveled way. Nuts for bolts that will be partially embedded in concrete shall be located on the side of the member that will be encased in concrete.

Bolts with diameters exceeding by up to 1/4 inch the diameter of the bolt shown on the plans may be used, provided that required clearances and edge distances are not reduced below that required for the larger bolt.

Other fasteners conforming to the requirements set forth in "Specifications for Structural Joints Using ASTM A325 or A490 Bolts," approved by the Research Council on Riveted and Bolted Structural Joints of the Engineering Foundation, may be used. Such fasteners, if used, shall have a positive tensioning procedure capable of calibration for accurately determining the bolt tension. For such fasteners using other than threaded connectors, the torque measurement requirements will not apply.

Appendix B-1. Excerpt from the 1978 State of California Department of Transportation Standard Specifications, Section 55-3, Fabrication of Steel Structures.

ClibPDF - www.fastio.com

91-2.01 Zinc-Rich Primer, Organic Vehicle Type (State Specification 8010-61J-36).—

Description:

This specification covers a one-package, thermoplastic organic zinc-rich primer whose mechanism of drying is that of solvent release. It is intended for use only on blast cleaned open steel structures exposed to the air.

This coating is intended for spray application. Limited application can be made by brushing.

Composition:

Pigment Ingredients
(62.3 Percent of Composition Weight, Minimum)

	Specification	Parts by Weight of Pigment: Type I, Red Tint	Parts by Weight of Pigment: Type II, Gray
Zinc Dust	TT-P-460, Type I [1]	95.0 min.	95.0 min.
Red Iron Oxide [2]	—	1.5 max.	—
Zinc Oxide	TT-P-463, Type I, Grades A or B	—	1.5 max.
Thixotropes and Additives	—	3.5 max.	3.5 max.

Vehicle Ingredients
(37.7 Percent of Composition Weight, Maximum)

	Specifications	Parts by Weight of Vehicle
Polyaryl Ether [3]	—	19.0
Ethylene Glycol Monoethyl Ether Acetate	MIL-E-7125	66.8
Toluene	TT-T-548	14.2

[1] Except the metallic zinc content shall be 95 percent by weight, minimum.
[2] Fe_2O_3 98.5% minimum; oil absorption, 21; fineness through 325 mesh screen, 99% minimum; and specific gravity, 5.15.
[3] A polyhydroxy polyalkaryl polyether of the following properties:

Specific Gravity	1.18
Viscosity of 40% solids in methyl ethyl ketone, Brookfield RVF, 20 rpm No. 5 spindle	5,500 to 7,700 cps
Reduced viscosity (0.2 g/100 ml. dimetheylformamide)	0.4 to 0.6
Ultimate tensile strength	9,000 to 9,500 psi
Ultimate tensile elongation	50 to 100%
Softening temperature	212° F.
Bulking value	0.102 gal. per lb.

The average particle size of the pigment shall not exceed 9 microns as determined by the Fisher Sub-Sieve Sizer. The Red Iron Oxide must first be ground into a portion of the vehicle to provide a Hegman grind sufficient to produce the specified color of the finished paint.

The necessary additives to prevent gas formation in the containers during storage shall be incorporated into the formulated paint.

Infrared Characteristic Curve of Primer Vehicle:

When dried upon a potassium bromide disc, a film of the primer shall have infrared absorption maximums at the same wavelengths and to the same relative degree as that shown by the curve on file in the Transportation Laboratory.

The composition of the extracted zinc dust pigment shall match the X-ray diffraction curve on file at the Transportation Laboratory.

The paint shall in addition to the preceding composition conform to the following table of requirements:

Characteristics of Paint:

Volatiles at 105° C., percent by weight	28–32
Weight per gallon, pounds	17.2–18.0
Viscosity, KU at 77° F.	100–120
Metallic zinc, percent by weight of extracted pigment by Federal Test Method No. 141, Method 7221	90.2 min.
Dry time at 77° F., 50% relative humidity, 6 mil wet thickness:	
Set to touch, hours	3/4 max.
Dry hard, hours	5 max.
Storage life, years	1 min.

Properties of Cured Coating:

When applied to a plate glass panel with a 6 mil gap clearance doctor blade and cured for 15 days at 77° ± 5° F. and 50 ± 5% relative humidity, the coating shall have the following properties:

Pencil Hardness	B min.
Color (for Type I only)	Not Lighter Than Standard Color Chip No. 42 (State Specification 8010-91B-95)

When applied by air or airless spray to a minimum dry film thickness of 1.5 mils on blast cleaned steel having an anchor profile pattern of one to 1.5 mils, the mixed paint shall completely wet the surface of the steel with no evidence of dry spray particles or sagging.

When applied to a wet film thickness of 6 mils on a metal panel corresponding to Federal Specification QQ-S-636, the panel being previously cleaned by blast cleaning to produce a one to 1.5 mil anchor pattern, and cured for 15 days at a relative humidity of 50 ± 5% and tested according to the Conical Mandril Test, Federal Test Method Standard No. 141, Method 6222, there shall be no loosening of the film above the point of the longest continuous crack.

When a steel panel is blast cleaned to white metal and coated with 3–4 mils dry film thickness of this coating and cured for 15 days at 75° ± 2° F. and 50 ± 5% relative humidity and diagonally scribed to expose bare steel, there shall be no underfilm corrosion on the surface of the panel extending beyond the scribed lines after 1,000 hours when tested according to ASTM Designation: B 117.

Prior to use, the paint shall be thinned with not more than one volume of thinner to 4 volumes of paint using a power agitated stirrer. The thinner shall consist of a mixture of 82 percent by volume of ethylene glycol monoethyl ether acetate and 18 percent by volume of toluene.

Appendix B-2. Excerpt from the 1978 State of California, Department of Transportation Standard Specifications, Section 91-2, Paints for Metal.

ClibPDF - www.fastio.com

Surface Treatment	No. of Specimens	Average Slip Load, kips	Slip Coefficient*
Sandblasted	5	104.8	.49
Mill Scale	1	60.5	.28
1.5 mils Organic ZN	1	82.8	.38
3 mils Organic ZN	3	70.8	.33
6 mils Organic ZN	1	59.0	.27
6 mils Vinyl Wash	1	42.0	.19

*Slip Coefficient, $K = \frac{P}{nbT}$

Where: P = Average slip load, kips

n = No. of slip surfaces = 2

b = No. of bolts per slip surface = 2

T = Tension per bolt, kips = 54

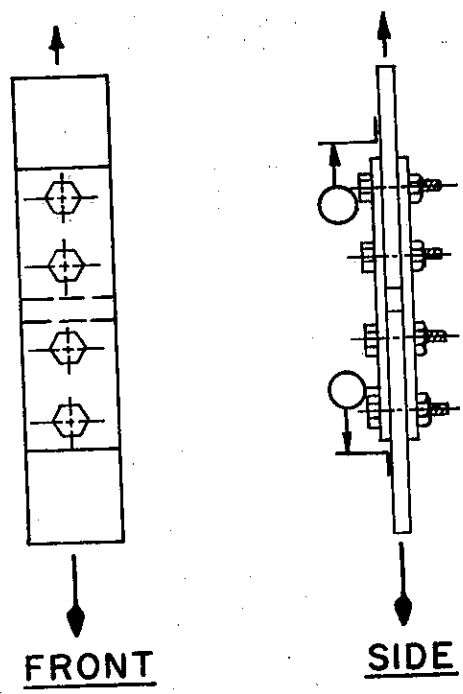

Typical Double Shear Test Specimen

Notes:

1. Loading Rate = 10 kips/min.
2. Bolt elongation = 0.020" ± 0.001" for all specimens.
3. Two dial gages or Bourns potentiometers mounted as shown in side view.
4. 7/8" Ø x 3 1/4" ASTM A325 bolts used in all tests.
5. 1"(inch) = 25.4 mm
   1 kip = 4.45 kN
   1 mil = 25.4 μm

Appendix C-1. Summary of First Stage Tension Test Results Including Average Slip Coefficients.

ClibPDF - www.fastio.com

No. of Specimens Tested	Surface Treatment	Constant Load, 1 kips	Measured Slip, inches
1	Sandblasted	64.8	< 0.001 in 160 minutes
1	2 mils Organic Zinc-Rich Primer	32.4 48.6	< 0.005 in 180 minutes
1	3 mils Organic Zinc-Rich Primer	32.4 48.6	=0.001 in 150 minutes > 0.010 in 60 minutes 2
1	3 mils Organic Zinc-Rich Primer	48.6 64.8	=0.0015 in 265 minutes > 0.010 in 30 minutes 2
1	6 mils Organic Zinc-Rich Primer	32.4 48.6	> 0.004 in 197 minutes and continuing > 0.010 in 23 minutes 2
1	6 mils Vinyl Wash	16.2 24.3	> 0.010 in 20 minutes 2

Notes: 1 Shown below are constant loads and corresponding percentage of allowable specimen design load as determined by shear in the joint

Constant Load, kips	Percent of Allowable Design Load
16.2	50
24.3	75
32.4	100
48.6	150
64.8	200

2 Rapid, excessive creep occurred.

3 1 inch = 25.4 mm
1 kip = 4.45 kN
1 mil = 25.4 μm

Appendix C-2. Summary of First Stage Creep Test Results.

ClibPDF - www.fastio.com

No. of Specimens Tested	Surface Treatment	Max./Min. Cyclic Load, ① kips	Max. Slip, inches	Total Cycles
1	Sandblasted	48.6	0.0013	8780
1	3 mils Organic Zinc-Rich Primer	16.2	0.0002	2008
		32.4	0.0003	3012
		48.6	0.0011	3000

Notes: ① Cycling Rate = 1/2 cycle per second, sinusoidal shape as shown below.

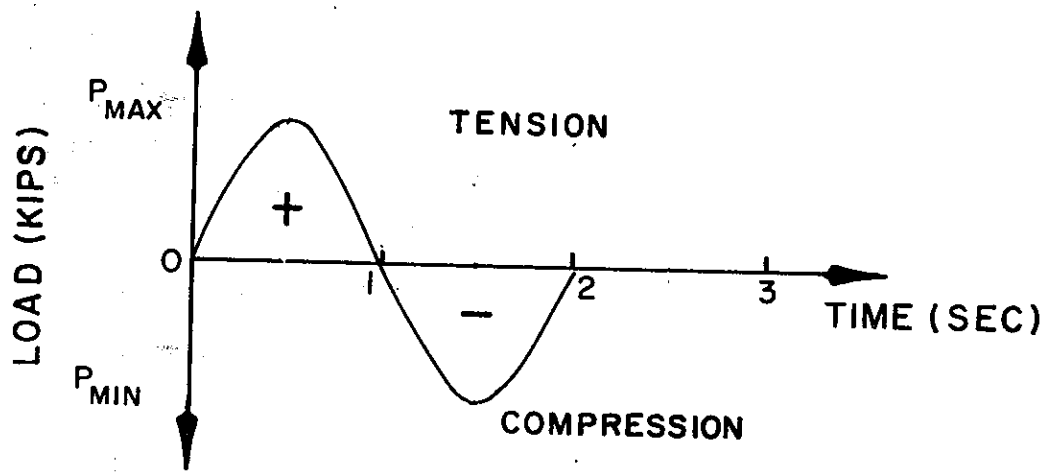

② 1 inch = 25.4 mm
1 kip = 4.45 kN

Appendix C-3. Summary of First Stage Cyclic Load Test Results.

ClibPDF - www.fastio.com

Surface Treatment	Specimen ID Nos.	Coating Thickness mils	Bolt Tension, kips (elongation) inches	Slip Load, kips (Deflection), inches Upper Plate/Lower Plate	Mean Slip Load, Kips	Slip Coeff. K	Slip Coeff. Avg. K
Sandblast	6	--	54 (0.020)	103.0/100.6 (0.014) (0.010)	101.8	.47	.48
	7	--	54 (0.020)	106.9/106.0 (0.015) (0.018)	106.45	.49	
	8	--	54 (0.020)	109.0/108.5 (0.027) (0.025)	108.75	.50	
	9	--	54 (0.020)	103.3/99.2 (0.026) (0.014)	101.25	.47	
	1DS	--	54 (0.020)	106.0/105.0 (0.016) (0.020)	105.5	.49	
	S1	--	39 (0.007)	98.8/106.7 (0.009) (0.007)	102.75	.66	.65
	S2	--	39 (0.007)	94.0/106.0 (0.005) (0.012)	100.0	.64	
Mill Scale	2DS	--	54 (0.020)	62.5/58.5 (0.038) (0.010)	60.5	.28	.28

Note: 1 inch = 25.4 mm, 1 kip = 4.45 kN, 1 mil = 25.4 μm.

Appendix D-1. Summary of Tensile Test Results from First and Second Stage Tests - Double Shear Specimens Only

ClibPDF - www.fastio.com

Surface Treatment	Specimen ID Nos.	Coating Thickness mils	Bolt Tension, kips (elongation) inches	Slip Load, kips (Deflection), inches Upper Plate/Lower Plate	Mean Slip Load, kips	Slip Coeff. K	Slip Coeff. Avg. K
Zinc, Hot-Dip Galvanized	GA		39 (0.007)	75.5/76.5 (0.007) (0.007)	76	.48	.46
	GB		39 (0.007)	62.0/70.3 (0.009) (0.006)	66.15	.42	
	GG		54 (0.020)	85.8/84.8 (0.007) (0.005)	85.3	.40	.40
	GH		54 (0.020)	91.0/84.0 (0.010) (0.005)	87.5	.41	
Vinyl Wash Primer	5DS	6	54 (0.020)	No Sudden Slip 46.0/38.0 (0.020) (0.020)	42.0	.19	.19
Organic Zinc-Rich Primer	7A	1	39 (0.007)	58.0/58.0 (0.005) (0.005)	58.0	.37	.38
	7B	1	39 (0.007)	59.1/58.9 (0.008) (0.004)	59.0	.38	
	2G	1	54 (0.020)	72.4/72.0 (0.007) (0.006)	72.2	.33	.35
	2H	1	54 (0.020)	77.3/74.0 (0.008) (0.009)	75.65	.35	
	3DS	1.5	54 (0.020)	79.3/86.2 (0.017) (0.025)	82.75	.38	

Note: 1 inch = 25.4mm, 1 kip = 4.45 kN, 1 mil = 25.4 μm.

Appendix D-1 (Continued).

ClibPDF - www.fastio.com

Surface Treatment	Specimen ID Nos.	Coating Thickness mils	Bolt Tension, kips (elongation) inches	Slip Load, kips (Deflection), inches Upper Plate/Lower Plate	Mean Slip Load, kips	Slip Coeff. K	Slip Coeff. Avg. K
Organic Zinc-Rich Primer	20	3	39 (0.007)	53.6/90.7 (0.008) (0.019)	72.15	.46	.41
	21	3	39 (0.007)	60.7/55.8 (0.009) (0.008)	58.25	.37	
	22	3	39 (0.007)	65.6/61.1 (0.014) (0.007)	63.35	.41	
	13	3	54 (0.020)	71.7/71.5 (0.010) (0.010)	71.6	.33	.33
	14	3	54 (0.020)	75.0/69.0 (0.012) (0.012)	72.0	.33	
	15	3	54 (0.020)	69.3/68.0 (0.012) (0.014)	68.65	.32	
	11A	6	39 (0.007)	53.5/53.7 (0.006) (0.004)	53.6	.34	.33
	12A	6	39 (0.007)	50.6/47.9 (0.005) (0.003)	49.25	.32	
	4DS	6	54 (0.020)	No Sudden Slip 59.0/59.0 (0.020) (0.020)	59.0	.27	.29
	13A	6	54 (0.020)	65.8/65.5 (0.006) (0.005)	65.65	.30	

Note: 1 inch = 25.4 mm, 1 kip = 4.45 kN, 1 mil = 25.4 μm.

Appendix D-1 (Continued)

ClibPDF - www.fastio.com

Surface Treatment	Specimen ID Nos.	Coating Thickness per Surface, mils	Bolt Tension, kips	Sustained Tensile Load, kips	Mean Slip, inches/hours
Sandblasted	S3	--	39	32.4 48.6	0.0/113.5 0.0/120.3
	S4	--	39	32.4 48.6	0.0/98.0 0.0/112.8
	S10	--	54	32.4 48.6	0.0002/101.7 0.0/112.9
Zinc, Hot-Dip Galvanized	7GC	10	39	32.4 40.5 48.6	0.0030/100.9 0.0039/100.0 0.0090/109.7
	7GD	10	39	32.4 40.5 48.6	0.0012/108.5 0.0041/95.3 0.0139/120.2
	GI	10	54	32.4 40.5 48.6	0.0006/100.0 0.0012/112.3 0.0033/120.0
	GJ	10	54	32.4 40.5 48.6	0.0008/98.7 0.0013/138.7 0.0019/100.0
Organic Zinc-Rich Primer	7C	1.5	39	32.4 48.6	0.0003/113.5 0.0015/143.9
	7D	1.5	39	32.4 48.6	0.0003/142.2 0.0008/103.0
	2I	1.5	54	32.4 40.5 48.6	0.0005/102.0 0.0002/101.3 0.0003/138.0
	2J	1.5	54	32.4 48.6	0.0004/143.9 0.0007/192.3

Note: 1 inch = 25.4 mm, 1 kip = 4.45 kN, 1 mil = 25.4 μm.

Appendix D-2. Summary of Creep Test Results - Double Shear Specimens.

ClibPDF - www.fastio.com

Surface Treatment	Specimen ID Nos.	Coating Thickness per Surface, mils	Bolt Tension, kips	Sustained Tensile Load, kips	Mean Slip, inches/hours
Organic Zinc-Rich Primer	P_1	3	39	32.4 48.6	0.0004/108.7 0.0005/100.8
	P_2	3	39	32.4 40.5 48.6	0.0004/144.0 0.0004/100.0 0.0008/100.0
	23	3	39	32.4 40.5 48.6 56.7	0.0005/92.2 0.0007/54.3 0.0033/99.5 0.128/76.6
	19	3	54	32.4	0.0016/114
	P_4	3.5	54	32.4 48.6	0.0002/118.5 0.0011/100.0
	X	6	39	32.4 48.6	0.0041/120.8 0.0204/70.5
	4	6	39	32.4 48.6	0.1212/142.9 0.0241/73.5
	9	6	39	32.4 48.6	0.0246/107.7 0.0783/144.0

Note: 1 inch = 25.4 mm, 1 kip = 4.45 kN, 1 mil = 25.4 μm.

Appendix D-2 (Continued)

ClibPDF - www.fastio.com

Surface Treatment	Specimen ID Nos.	Thickness of Coating, mils	Bolt Tension, kips	Cyclic Loading Range, ± kips	No. of Cycles	Average Amount of Movement, inches (from maximum + to - loads) Start/End	Shift in Zero Load Reading Top/Bottom, inches
Sandblasted	SB-1	---	39	32.4	125,950	0.0030/0.0032	+0.0047/-0.0003
	SB-2	---	39	32.4	117,800	0.0018/0.0021	-0.0003/+0.0001
				48.6	130,400	0.0033/0.0032	-0.0006/0.0
	S-5	---	39	32.4	115,000	0.0025/0.0023	-0.0008/-0.0004
				48.6	100,040	0.0038/0.0038	-0.0002/-0.0003
	S-6	---	39	32.4	87,380	0.0024/0.0023	-0.0005/-0.0009
				48.6	164,250	0.0037/0.0034	-0.0006/-0.0004
	S-11	---	54	32.4	129,400	0.0020/0.0021	-0.0005/-0.0003
				48.6	169,100	0.0037/0.0033	-0.0002/+0.0001
	S-12	---	54	32.4	96,200	0.0020/0.0019	-0.0006/-0.0011
				48.6	99,800	0.0032/0.0033	-0.0003/-0.0008
Organic Zinc-Rich Primer	7-E	1.5	39	32.4	99,875	0.0016/0.0014	+0.0001/-0.0002
				48.6	99,970	0.0022/0.0025	0.0/+0.0006
	7-F	1.5	39	32.4	123,940	0.0018/0.0018	-0.0001/+0.0001
				48.6	170,824	0.0031/0.0031	0.0/+0.0003
	P-6	3	39	32.4	99,600	0.0020/0.0019	+0.0014/+0.0004
				48.6	85,525	0.0033/0.0033	+0.0049/+0.0018
	P-3	3.5	39	32.4	98,279	0.0022/0.0021	-0.0003/-0.0004
				48.6	99,890	0.0035/0.0035	+0.0001/+0.0001

Note: 1 inch = 25.4 mm, 1 kip = 4.45 kN, 1 mil = 25.4 μm.

Appendix D-3. Summary of Cyclic Loading Test Results - Double Shear Specimens.

ClibPDF - www.fastio.com

Surface Treatment	Specimen ID Nos.	Thickness of Coating, mils	Bolt Tension, kips	Cyclic Loading Range, ± kips	No. of Cycles	Average Amount of Movement, inches (from maximum + to - loads) Start/End	Shift in Zero Load Reading Top/Bottom, inches
Organic Zinc-Rich Primer	P-5	3	54	32.4	88,430	0.0016/0.0016	-0.0006/-0.0005
				48.6	99,940	0.0032/0.0029	0.0/-0.0005
	18	3	54	32.4	108,135	0.0029/0.0025	+0.0005/+0.0019
	OZ-6C1	6	39	32.4	90,305	0.0024/0.0023	-0.0008/-0.0003
				48.6	101,900	0.0035/0.0039	-0.0119/+0.0005
	OZ-6C2 (#5)	6	39	32.4	167,300	0.0018/0.0017	+0.0162/+0.0232
				48.6	2922	Specimen failed by gross slip	
	OZ-6C3 (#10)	6	39	32.4	123,306	0.0010/0.0005	-0.0008/-0.0011
				48.6	102,400	0.0029/0.0036	+0.0001/-0.0013

Note: 1 inch = 25.4 mm, 1 kip = 4.45 kN, 1 mil = 25.4 μm.

Appendix D-3 (Continued)

ClibPDF - www.fastio.com

SAMPLE CALCULATIONS FOR CYCLIC LOADING TEST RESULTS

Typical Raw Data

Specimen ID No.	No. of Cycles	Cyclic Load Range, kips	Recorded Deflections, inches Dial Indicators top	bottom
OZ-6C1	(initial) 230	+32.4	0.1989	0.6995
		0	0.2001	0.7009
		-32.4	0.2010	0.7021
	(final) 90,535	+32.4	0.1996	0.6997
		0	0.2009	0.7012
		-32.4	0.2016	0.7022

Calculations:

1. Maximum ranges of deflection (includes elastic movement plus slip) at initial and final number of cycles of top and bottom dial indicators were determined as shown below. Mean values for maximum deflection ranges were then determined at both initial and final number of cycles for minimum ranges of top and bottom dial indicators.

Example:

Initial deflection readings at 230 cycles

top dial indicator,

0.2010" - 0.1989" = 0.0021"

bottom dial indicator,

0.7021" - 0.6995" = 0.0026"

Σ = 0.00047"

start average = 0.00235" ≃ 0.0024"

Final deflection readings at 90,535 cycles

top dial indicator,

0.2016" - 0.1996" = 0.0020"

bottom dial indicator,

0.7022" = 0.6997" = 0.0025"

Σ = 0.0045"

end average = 0.00225" ≃ 0.0023"

ClibPDF - www.fastio.com

2. The shift in the relative position of the center and end plates at zero load was next determined by subtracting the dial indicator readings at zero load made at the initial number of cycles from those made at the final number of cycles. The sign of the number indicates whether the specimen length increased (+ sign) or decreased (- sign) as a result of the plate movements.

Example:

top dial indicator, initial - final zero load readings

0.2001" - 0.2009" = -0.0008"

bottom dial indicator, initial - final zero load reading

0.7009" - 0.7012" = -0.0003"

3. Finally the actual number of cycles was determined by subtracting final from initial cycles.

Example:

90,535	-	230	=	90,305
(final no. of cycles)		(initial no of cycles)		(no. of cycles)

ClibPDF - www.fastio.com

ClibPDF - www.fastio.com