3871

HIGHWAY RESEARCH REPORT

69-33
DND

INFILTRATION DRAINAGE OF HIGHWAY SURFACE WATER

INTERIM REPORT

TRANSPORTATION MATERIALS
& RESEARCH LIBRARY

STATE OF CALIFORNIA

BUSINESS AND TRANSPORTATION AGENCY

DEPARTMENT OF PUBLIC WORKS

DIVISION OF HIGHWAYS

MATERIALS AND RESEARCH DEPARTMENT

RESEARCH REPORT

NO. M & R 632820-1

Prepared in Cooperation with the U.S. Department of Transportation, Bureau of Public Roads August, 1969

ClibPDF - www.fastio.com

ClibPDF - www.fastio.com

STATE OF CALIFORNIA—TRANSPORTATION AGENCY

RONALD REAGAN, Governor

DEPARTMENT OF PUBLIC WORKS
DIVISION OF HIGHWAYS
MATERIALS AND RESEARCH DEPARTMENT
5900 FOLSOM BLVD., SACRAMENTO 95819

August, 1969

Interim Report
M & R No. 632820-1

Mr. J. A. Legarra
State Highway Engineer

Dear Sir:

Submitted herewith is a research report titled:

INFILTRATION DRAINAGE

OF

HIGHWAY SURFACE WATER

TRAVIS SMITH
Principal Investigator

RICHARD R. PETER, ROBERT E. SMITH, AND EARL C. SHIRLEY
Co-Investigators

Very truly yours,

JOHN L. BEATON
Materials and Research Engineer

ClibPDF - www.fastio.com

ClibPDF - www.fastio.com

REFERENCE: Smith, T. W., Peter, R. R., Smith, R. E., Shirley, E. C., "Infiltration Drainage of Highway Surface Water," State of California, Department of Public Works, Division of Highways, Materials and Research Department, Research Report 632820-1, August, 1969.

ABSTRACT: The use of infiltration basins and wells for disposal of highway surface runoff in northern California is evaluated. Results of a literature search and a field survey of current practice are reported. Critical design and performance factors for basins and wells are listed. Social factors including health, safety, and aesthetics are discussed. Procedures for design, construction, and maintenance are suggested. It was concluded that basins can be a practical and economical means of disposing of highway surface water, but wells have a more limited application. Provision of storage to contain all the runoff from the design storm sequence, without taking infiltration into account, was judged to be the most important single design criterion. Two outstanding factors with regard to infiltration drainage are soil permeability and silt build-up in the drainage facility. Recommendations are made for further study directed at: Correlation of field infiltration testing and actual drainage facility performance, development of silt filters, evaluation of special treatments to improve infiltration rates, and evaluation of hydrologic design procedure used to calculate runoff quantities from restricted watersheds.

KEY WORDS: Drainage, infiltration, surface runoff, highway drainage, disposal, drainage wells, drainage basins, percolation.

ClibPDF - www.fastio.com

ACKNOWLEDGMENTS

Acknowledgment is extended to the following persons for their assistance in this study: the California Division of Highways personnel in Districts 06 and 10 who supplied information pertinent to this project; Charles Gallaty and George Blair of Blair-Westfall Associates, Fresno; and Harter Bruch, Stanislaus County Engineer. The writers are indebted to the several engineering journals and publications which were used in part as source material. Due to the broad nature of the topic in disussion, it was not always feasible to give specific credits to the information so obtained.

The work reported herein was authorized as a portion of the research project, "Disposal of Surface Water." This study was done under the work program HPR-1(6), E-3-1, in cooperation with the U.S. Department of Transportation, Federal Highway Administration, U. S. Bureau of Public Roads.

The opinions, findings, and conclusions expressed in this publication are those of the authors and not necessarily those of the Bureau of Public Roads.

ClibPDF - www.fastio.com

CONTENTS

	Page
ABSTRACT	i
ACKNOWLEDGMENTS	ii
LIST OF FIGURES	iv
INTRODUCTION	1
CONCLUSIONS	1
RECOMMENDATIONS	2
DISCUSSION	3
LITERATURE REVIEW	3
NORTHERN CALIFORNIA PRACTICE	4
Public Health Restrictions	5
State of California	5
San Joaquin County	5
Stanislaus County	5
Typical Installations	6
California Division of Highways - District 06	6
California Division of Highways - District 10	11
Fresno Municipal Flood Control District	14
Stanislaus County	16
DESIGN AND MAINTENANCE CRITERIA	16
Basins	16
Design and Technical Considerations	18
Aesthetic and Social Considerations	25
Wells	26
ANNOTATED BIBLIOGRAPHY	30

ClibPDF - www.fastio.com

LIST OF FIGURES

			Page
Figure 1	-	California Division of Highways District 06 Basin Installations	7
Figure 2	-	Typical Basin Cross Sections	8
Figure 3	-	Well Installations (Similar to those of District 06)	10
Figure 4	-	Drain Well (Similar to standard District 10 unit)	12
Figure 5	-	Compressed-Air Jet Well Cleaner	13
Figure 6	-	Typical Park-Type Basin Drainage Installation	15
Figure 7	-	Drain Well with Drop Inlet Unit	17
Figure 8	-	Infiltration Rates vs. Natural Ground Slope	19
Figure 9	-	Infiltrometer Types	20
Figure 10	-	Effect of Infiltrometer Depths and Buffer Zones	22

ClibPDF - www.fastio.com

INTRODUCTION

The disposal of surface water runoff from highways is a growing problem in certain parts of California. According to law, the State (or any other "person") can be held responsible for adversely altering natural surface flows and drainage. Beside the legal difficulties, there are technical and economic problems. In the Central Valley area of Northern California, for example, much of the land is extremely flat with few remaining well-defined natural watercourses; consequently, conventional disposal methods are often impractical or prohibitively expensive.

Some agencies in Northern California, including State Highway District 06 and 10, Stanislaus County, and the City of Fresno, among others, are currently trying to alleviate these problems by using wells and basins for drainage of surface runoff. There is little uniformity in the design or construction of these infiltration installations and varying degrees of success have been achieved.

Because of these problems the California Division of Highways, in a research project initiated at the suggestion of Highway District 10, is studying the use of drainage wells and basins as a supplemental means of surface water disposal. The ultimate goal of this project is to establish definite standards for drainage well and basin design, construction, and maintenance. To best develop these standards further investigation and actual experimentation will be necessary.

This report includes a review of pertinent literature and a summary of current practice in infiltration disposal in northern California. Interim design criteria and procedures for construction and maintenance are suggested. Special recommendations for further research are outlined with the aim of increasing the implementation of infiltration drainage in highway practice.

CONCLUSIONS

1) Drainage basins are a practical and economical means of disposing of highway surface runoff, if properly designed and situated in a permeable soil. They can usually be located in the normally acquired right of way, and make efficient use of space within freeway interchange loops, along highway shoulders, etc.

2) Wells are limited in their capacity to drain surface water. When utilized alone, wells are able to drain only a small area such as a subdivision intersection, or a few dozen yards of highway median. Frequent maintenance is also required, and wells, when compared with basins, are fairly expensive to construct and operate in terms of cost per unit volume of water drained. They are most beneficial when used in conjunction with drainage basins to increase infiltration rates through the basin floor, or to penetrate impervious strata underlying the basin which would otherwise impede percolation.

ClibPDF - www.fastio.com

3) The most important single design criterion for an infiltration drainage installation is to provide the storage volume required to contain all the surface runoff from a specified storm or storm sequence--without taking infiltration into account. Actual drainage performance is a secondary though still important problem.

4) The two most important factors involved with infiltration drainage are (1) soil and substrata permeability and (2) prevention or removal of silt build-up in drainage facilities.

5) Basin infiltration rates cannot (usually) be estimated directly from small scale infiltrometer tests; but, the infiltrometer test can be used in a comparative manner after correlation of test results with known infiltration rates of basins already in operation.

No tests have been specifically designed to estimate the flow out of a drain well situated above the water table. Until such a test is developed, well drainage rates can only be determined by actually constructing a drain well and observing its performance.

6) No two drainage installations will be exactly the same since soil, geologic and hydrologic conditions, depth, size, location, runoff volumes and even runoff quality will vary in every case. Although this fact excludes the possibility of a single standardized design, practical design criteria and operational procedures can be established.

RECOMMENDATIONS

Further study and research will be necessary to establish better design criteria for drain wells and basins, and to improve the performance of these facilities. It is recommended that further research be directed toward the following problem areas.

1) Infiltration Study

Due to insufficient information regarding infiltration analysis and infiltrometer testing, infiltration rates are given little consideration in well and basin design in current California practice. Few, if any, field tests are conducted to determine the drainage characteristics of a selected installation site. There also appears to be no test method at present that is specifically designed to measure well drainage outflows when the shaft terminates above the groundwater table. Consequently, a program of research on infiltration testing should be established so that techniques of infiltration analysis may be developed and standardized. Infiltration tests should be carried out at existing well and basin locations so that the values obtained may be correlated with the actual performance of these facilities and with local soil and geologic features.

2) Well Filters

Providing that a drain well penetrates a pervious soil stratum, the most serious impediment to the efficient operation of such a facility is silt clogging. The development of an effective entrance filter to remove silt from inflowing runoff water would be greatly beneficial to well performance and effectiveness. Different filter designs should be tested

ClibPDF - www.fastio.com

at existing well installations, including plastic or rubber foam, gravel, sand, and possibly the crushed lava filters which are discussed within the report.

3) Special Basin Treatments

Infiltration-improving treatments, to determine their utility in practice, should be applied to some basins presently in operation. These treatments may include: filtration of runoff water through gravel or Bermuda grass basin linings, the incorporation of coarse organic trash in the basin floor, and perhaps the use of chemical flocculants to settle silt in storm runoff water. In the case of flocculants, the experience of other agencies regarding flocculation settlement should be reviewed. Tests could be run in an actual highway runoff settlement basin to determine the best method of application, the typical performance, and economy of various flocculants.

4) Storage Volume Design

The storage volume required for holding runoff water is generally claculated by estimating the total runoff from a certain section of highway during a specified storm sequence, without considering basin or well infiltration. An evaluation of this design procedure is in order since it is known that in specific instances the conventional runoff coefficients have to be modified for small highway drainage areas. Also, with a better understanding of infiltration performance (see recommendation #1), storage volume might be altered to take drainage rates into account. A study of the proper design storm size should be made as well. The size of storms presently being used in design might either provide an inadequate factor of safety in some situations, or be too conservative in others.

DISCUSSION

LITERATURE REVIEW

A survey of several dozen possible literary references yielded only one report specifically concerned with the use of drainage wells or basins as a means for disposing of surface runoff (4, pp 1-10). However, recharge wells and basins have been used for many years in the United States and throughout the world to replenish depleted groundwater supplies, and much has been written concerning these operations. While it is true that many of these activities are on a larger scale, and for a different purpose, much of the information and experience gained is applicable to the problem at hand.

The review of literature covered most of the pertinent material published from 1946 to 1967. The 19 articles and texts found most applicable to this study are listed in the Annotated Bibliography where each publication reference is accompanied by a brief abstract.

General background information regarding recharge basins and wells is provided by references 6, 7, 8, 14, 18 and 19. These sources describe the basic functions, purposes and overall effectiveness of recharge installations.

ClibPDF - www.fastio.com

References 8, 10 and 18 cover factors which determine or affect the infiltration rate of water into the ground. These factors include soil types and profiles, ground slopes, chemical reactions and biological growths, among others.

Various types of infiltration tests can be used to help estimate the drainage capacity of a basin at any particular site. References 5, 7, and 12 describe some of these in situ test methods.

References 1, 2, 3, and 15 discuss the theoretical behavior of infiltrating groundwater based on mathematical development, or laboratory testing of models under ideal conditions. Although little of the information can be applied directly to drainage facilities in the field, it provides a better understanding of ground water flow phenomena and infiltration factors (e.g., mounding, groundwater profiles, etc.).

Physical or chemical treatment of recharge water is sometimes required to maintain good drainage. References 7, 8, 9, 11, 13, 16, 17, 18, and 19 all discuss various treatments and their effects; chlorination, filtration (through grass, gravel or sand), settlement and flocculation of suspended matter are a few of the processes described.

Maintenance practices and operational procedures are outlined in references 8, 13, 17, and 18. These include: cleaning, filter replacement, soil treatment, well development, ground cover planting, drying-out periods, insect control, and more.

Finally, one article, reference 4, pertains directly to this study. It describes drainage basins and wells constructed by District 06 to dispose of highway runoff. This report indicates that the District has found these installations to be satisfactory in most cases, and considerably less expensive than other drainage systems. More details on current California practice follow in the discussion of our field survey in the Central Valley.

NORTHERN CALIFORNIA PRACTICE

The use of wells and basins to dispose of surface runoff is fairly prevalent in the Central Valley area of California, particularly in the flat agricultural region between Stockton and Bakersfield. Information concerning the design, maintenance, and performance of drain wells and basins were obtained from four agencies in this area: Stanislaus County, the City of Fresno, and California Division of Highways Districts 06 and 10.

The Public Health Departments of the State of California, Stanislaus County, and San Joaquin County were also contacted concerning restrictions on disposal of surface runoff into basins or wells.

ClibPDF - www.fastio.com

Public Health Restrictions

State of California. The Department of Public Health specifically prohibits the introduction of sewage into a subterranean water-bearing stratum through a well (Health and Safety Code, Sec. 4458). Although this law applies to sewage, the Department of Public Health is also concerned with disposal of surface runoff into drain wells. The Department adopted a resolution (not a "law" as such) in 1939, later modified in 1942, which states: "By reason of the fact that the use of drain wells into water strata for getting rid of road drainage or land drainage may be a means of carrying dangerous cesspool overflow, or at least dirty water, into water strata which are suitable and valuable for domestic water supply, and may thereby pollute it, and it is found that there are various other ways in which land and road drainage can be eliminated without the use of such drain wells, the State Board of Public Health hereby disapproves of the practice of disposing of road or land drainage into wells, reaching the water strata used or suitable for domestic well water, and the board hereby requests the various public officials concerned to lend their support to the fulfillment of this resolution."

Neither the state nor the county public health departments place restrictions on the disposal of surface runoff into basins.

San Joaquin County - Environmental Health. San Joaquin County generally enforces or cooperates with State Health Department, Water Pollution Control Board, and Department of Water Resources regulations and resolutions concerning drainage and waste water disposal. The restrictions placed on drainage wells are: a 10-foot clearance of the groundwater table at the time of construction, or a 25-foot maximum well depth, whichever is shallower. However, there are no restrictions on drainage wells used to dispose of properly treated runoff. This implies the use of filtration, chlorination, or any other processes needed to achieve good recharge water quality. The required treatment would probably be either too costly or impractical for routine use by the Division of Highways in the disposal of surface water.

The 10-foot aquifer clearance, (required at the time of construction) for drain wells, seems to be a standard accepted by a number of agencies. It provides that at least some natural filtration can occur before runoff reaches the groundwater - so long as the water table remains below the well. The main idea is to prevent any unnecessary artificial penetration of the aquifer, and thereby minimize the possibility of contamination. There is too much variablity in the quality of highway runoff to risk direct drainage into a ground water supply. Weather, traffic density, highway transport spillage, and agricultural activities are just a few of the factors which can affect highway runoff.

Stanislaus County - Environmental Health. Stanislaus County also follows the State Health and Safety Code, and State Health Department requirements. A 10-foot aquifer clearance is specified, although this regulation does not appear to be rigidly adhered to. Groundwater is very high in some parts of the county, especially in the vicinity of Turlock where water tables may at times be only 12 inches below the ground surface. Consequently, wells are often not feasible in this area.

ClibPDF - www.fastio.com

Building permits are required by the County for all drainage well installations, and a Building Department inspector must be present during drilling and construction. The County also recommends that catch basins be used in conjunction with drain wells to trap silt and solids in the runoff water.

Typical Installations

Division of Highways, District 06. (Headquarters at Fresno) District 06 has made extensive use of drain wells and basins for many years. Basins are generally considered preferable to wells and no new wells are currently being planned. Well installations have been found troublesome and unpredictable in regard to their drainage capacities. However, many older wells are still functioning properly.

Again, basins are generally located within available right of way space. They often serve as a source of construction material during highway construction. Basins occupy from 1 to 6 acres and are designed with sufficient volume to contain the runoff from two consecutive 24-hour storms having 10-year frequencies of occurrence. The District has found that modified runoff coefficients are required to give more accurate estimates of runoff volume and intensity from the relatively small drainage areas being considered in basin design.

Basin sideslopes are 2:1 or flatter to prevent erosion and improve appearance, and installations near residential areas are generally fenced. Settlement ponds are sometimes used with drainage basins to remove silt. In cases where the soil is sandy and infiltration rates high, inflowing water moves through a shallow low-velocity channel, allowing large particles to settle out.

One installation observed, the Ashlan Avenue basin located in the outskirts of Fresno, consists of a large settlement pond with a smaller drainage basin located within it, seen in Figure 1-C. Within the small basin is a group of seven 48-in. wells, approximately 50 ft deep, extending down through clay and hardpan layers near the surface. These wells drain off standing water rapidly. An average of 10 acre-ft of water is pumped into the 9-year old basin each season.

Several District 06 drainage basins have pervious trenches in the floor to increase infiltration as seen in Figures 1-D and 2-B, D. These trenches are 12-ft wide, 6-10 ft deep and are backfilled with sand, or standard filter material. In two instances, 36-in vertical sand drains were drilled in the bottom of the trenches to penetrate underlying hardpan. The trench fill is slightly mounded above the basin floor, and the top few inches of this mound filters out all suspended silt and dirt from the water being drained. When this sand or filter material becomes clogged with fines, the top of the mound is scraped off and replaced with clean material (usually concrete sand). To further improve drainage, the top 2 or 3 feet of the entire basin floor is ripped to loosen the soil and any hardpan present. Basin surfaces are usually scarified once a year thereafter to break up silt deposits and restore topsoil porosity, illustrated in Figure 1-A.

ClibPDF - www.fastio.com

Figure 1

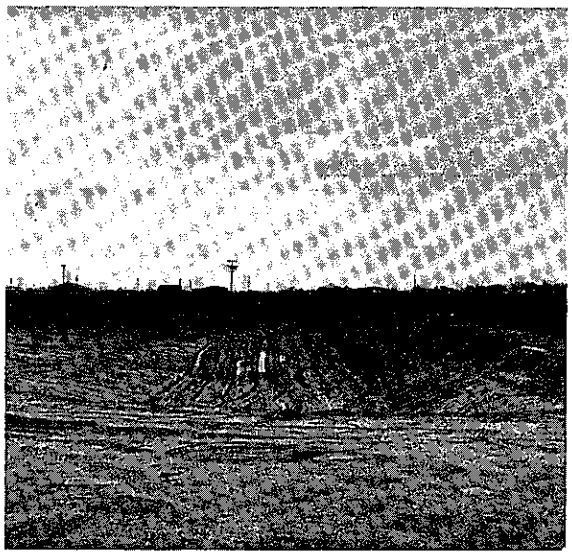

A. Church Ave. basin. Note scarified basin floor.

B. Typical small basin within freeway interchange loop. This basin is grass-lined, and has one well to improve drainage.

C. Ashlan Ave. basin, located within larger settlement pond. Erosion in foreground is result of recent heavy rains.

D. Maud Ave. basin, showing mounded pervious trench in center.

CALIFORNIA DIVISION OF HIGHWAYS
DISTRICT 06 BASIN INSTALLATIONS
IN THE VICINITY OF FRESNO, CAL.

ClibPDF - www.fastio.com

Figure 2

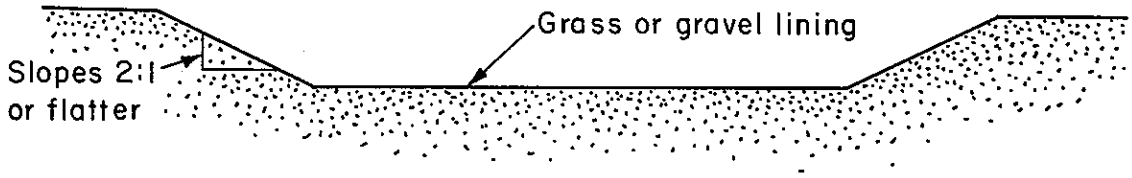

A. BASIN IN PERMEABLE MATERIAL

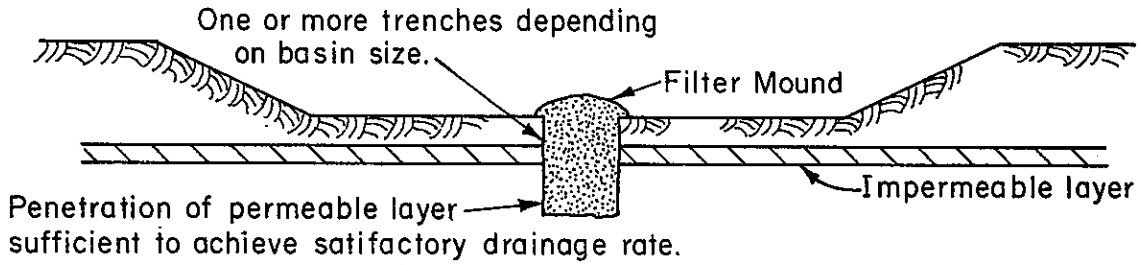

B. BASIN WITH TRENCH

(Shallow impermeable layer)

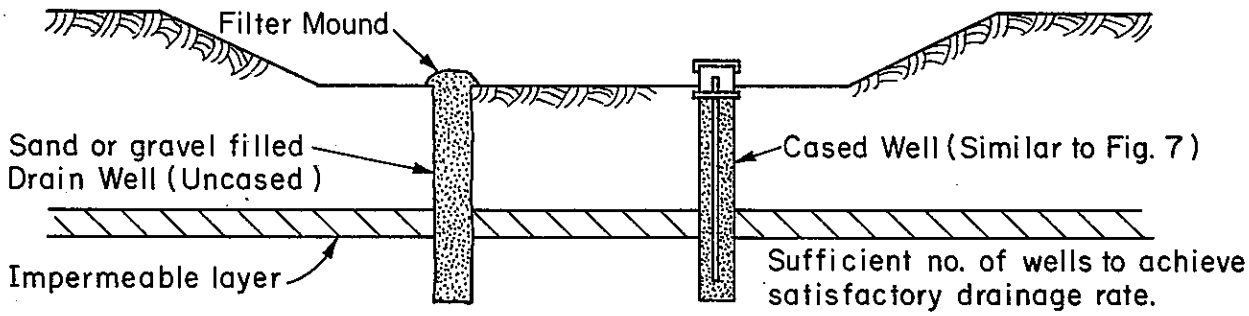

C. BASIN WITH WELLS OR DRAINS

(Deeper impermeable layer)

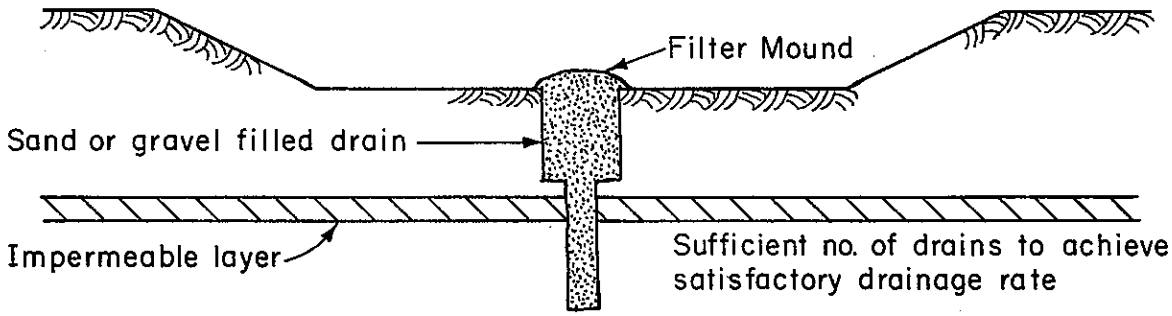

D. BASIN WITH TRENCH AND DRAINS

(Deeper impermeable layer)

TYPICAL BASIN CROSS SECTIONS

ClibPDF - www.fastio.com

District 06 operates some basins in conjunction with cities such as Bakersfield, Sanger, and Fresno. These communities have converted shared drainage installations into attractive parks and recreation areas with lawns and trees, similar to the Fresno Metropolitan Flood Control District facilities. This dual usage of basins is of considerable benefit to the highway user and the public as a whole since valuable land is used much more efficiently.

Since 1935, this District has installed at least 250 drain wells, with over 100 in the Fresno area alone. These wells were only installed to handle drainage problems in a small area, and often as a last resort. The average installation is about 30 ft deep and clears the water table by 10 ft or more. Many different designs have been used, and several mechanical and chemical maintenance methods have been applied with varying results (4, pg 8). The latest well design consists of an open shaft with an open-end perforated casing, and maintenance involves cleaning with the same type compressed air jet as described in the later discussion of typical installations in District 10.

Two types of wells are used by District 06, the open-end casing (with or without perforations) and the sand-packed perforated metal pipe (PMP), similar to those in Figure 3. When the open-end casing well is installed, the compressed air jet is used to blast out a cavity in the sand or soil beneath the end of the shaft. Usually several yards of sand are removed in developing the well. The jet is used again at regular intervals to remove silt and sand from the shaft and form a new cavity. This type of installation functions well in the sandy strata of the Fresno area.

The sand-packed well consists of a large 36-in. diameter perforated metal casing into which a smaller 8-12 in diameter PMP is inserted, and the space between them filled with sand. This well is developed and maintained much like the first type described. When the well is cleaned out with the air jet after a period of operation, much of the dirty sand packing is removed along with the sand underlying the well, causing a subsidence of the packing at the top of the shaft. More clean sand packing is added to replace that which was removed. Sand has been found superior to gravel packing in that it is easier to clean with the compressed air jet, gravel tending to cement together with silt. When perforated well shafts are used, only the lower section of the shaft is perforated, where it penetrates a sand layer. This prevents silt or clay topsoils from washing into the well and plugging it.

The sandy substrata of the western Fresno area provide good drainage for wells and basins located in that vicinity along Highway 99. The water table is very low (100 ft+) due to excessive pumping, and the sandy, dry, upper aquifers remain to absorb runoff drainage. These aquifers are often separated by silt or hardpan layers, but wells and trenches installed in the basin floors to penetrate the impervious strata usually insure good infiltration rates. In the eastern section of Fresno, however, the sand contains more silt and clay and the drainage is considerably less rapid.

ClibPDF - www.fastio.com

Figure 3

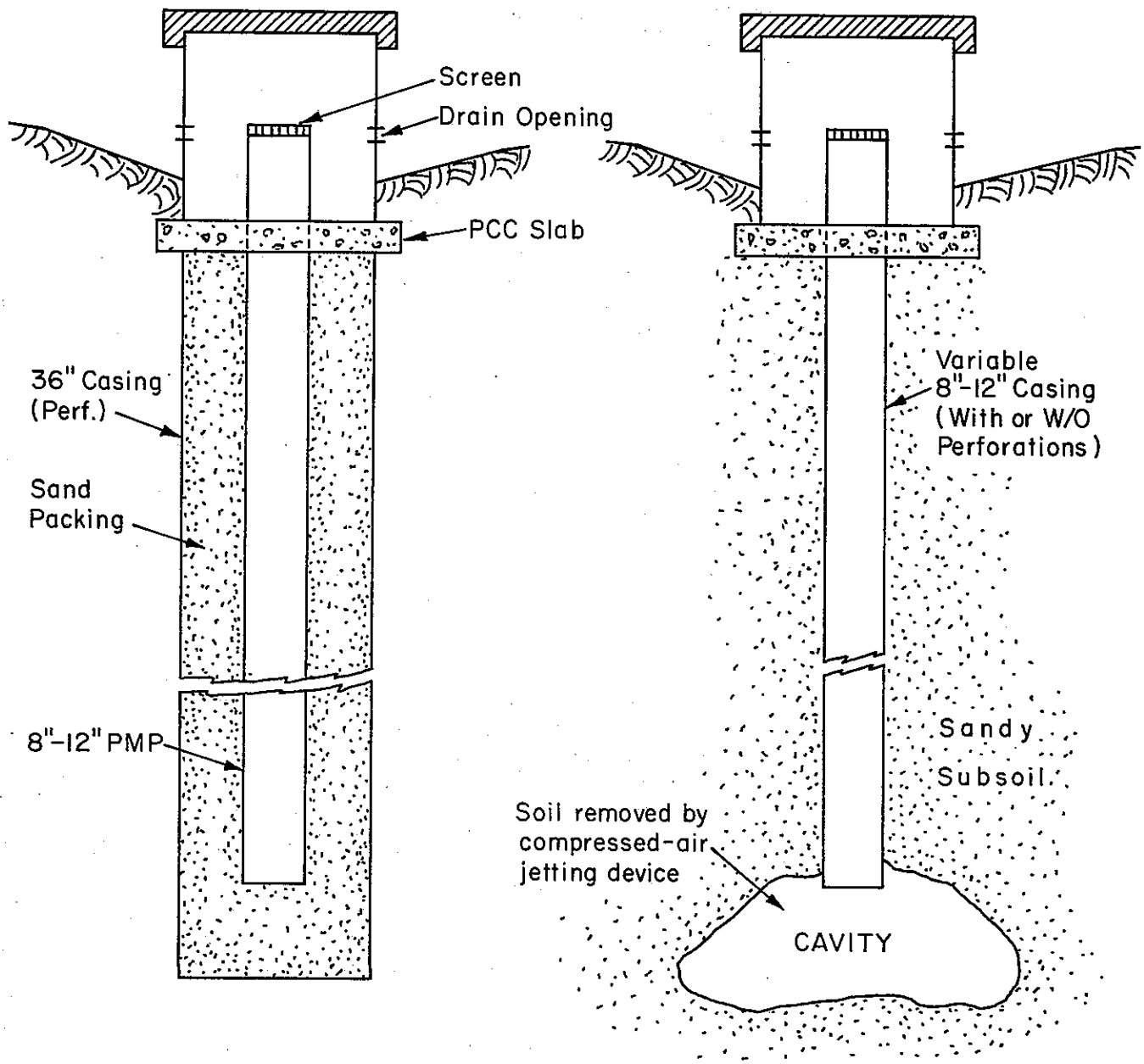

WELL INSTALLATIONS

(Similar to those of District 06)

ClibPDF - www.fastio.com

Further north, just above the San Joaquin River in Madera County, drainage is extremely poor, with water still standing in basins and on shoulders as long as a month after a large storm. Boring logs show that a layer of cemented silty sand lies approximately 5 feet below the surface, restricting vertical percolation.

District 06 has realized a considerable savings by utilizing drainage basins and wells. The Maude Avenue basin in Fresno, used to drain a 6500-ft, depressed section of U.S. 99, cost a total of $130,000. An outfall line extending to the nearest natural channel, Dry Creek, would have cost $205,000. Total cost of the Ashlan Ave. installation was $70,000, whereas the cost of 4-1/2-mile outfall line to the San Joaquin River was estimated at over $250,000 (4, pg. 10).

Division of Highways, District 10 (Headquarters at Stockton). District 10 uses both basins and "dry wells" to dispose of highway surface runoff, mostly in the vicinity of Highway 99 through the Stockton-Merced area. The District is now relying more extensively on basins than wells, however. Experience has shown that wells perform inconsistently and are troublesome to maintain.

District 10's primary basin design consideration is retention of storm water runoff. Sufficient volume is provided to contain all the water from the largest known storm, which until 1969 was the 1958 series. The infiltration capacity of the soil is not directly considered; basins are located wherever convenient, such as within interchange loops, along shoulders, etc. Basins in this District can usually be contained within the normally acquired right of way. Some basins are not used as infiltration ponds, but only to retain runoff during the storm period. When water levels in nearby streams or canals drop, water is pumped out of the basins, or released through gates or pipes into these channels.

A standard well design, Figure 4, used by District 10 consists of a 12-in. PMP surrounded by 6 inches of rock filter material. There are several feet of very coarse gravel at the bottom of these wells which serves as backfill over the water table. A simple catch basin is provided to trap silt and trash. Wells are located in ditches, gutters or small pond areas which serve as temporary small capacity reservoirs for the runoff, since the wells take up to 24 hours or longer to drain away standing water, depending on reservoir size.

Wells are drilled to the groundwater table, then backfilled about 10 ft according to Health Department regulations, although most of the older wells extend into the aquifer. One problem in complying with 10-ft restriction is that the water table fluctuates considerably during the year, and occasionally reaches the surface. As a result, wells drilled to within 10 ft of the aquifer during the summer are sometimes below the water table in the winter when runoff is greatest and natural filtration is most needed. Nevertheless, there has been no evidence, in this area, of groundwater pollution attributable to drain wells.

District 10 maintains their wells by periodic jetting, which removes silt and fines. Jetting consists of partially filling a well with water, then injecting compressed air through a nozzle placed near the bottom of the shaft, Figure 5. Dirt or sand which has settled in the shaft or clogged the

ClibPDF - www.fastio.com

Figure 4

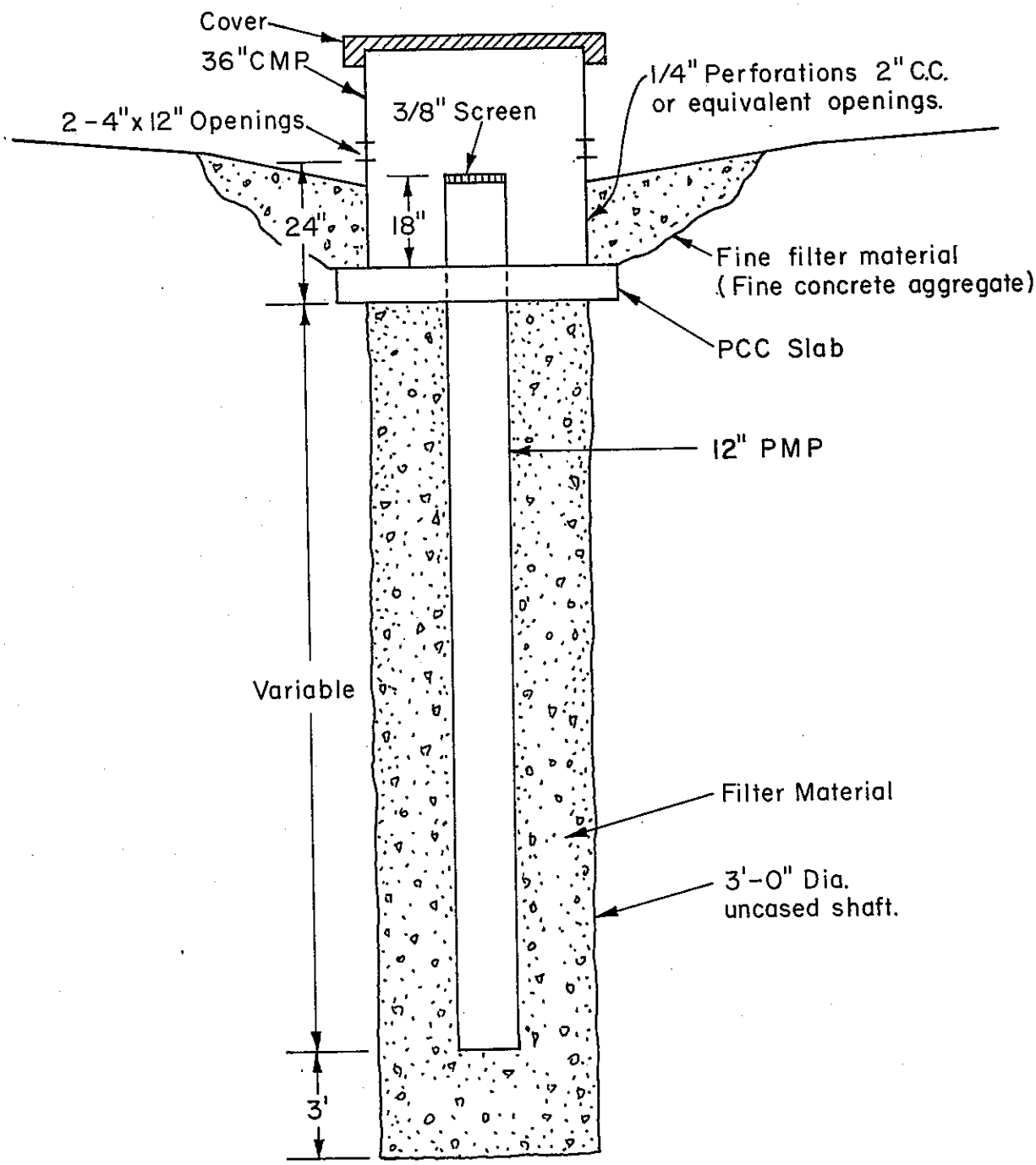

DRAIN WELL

(Similar to the standard District 10 unit)

ClibPDF - www.fastio.com

Figure 5

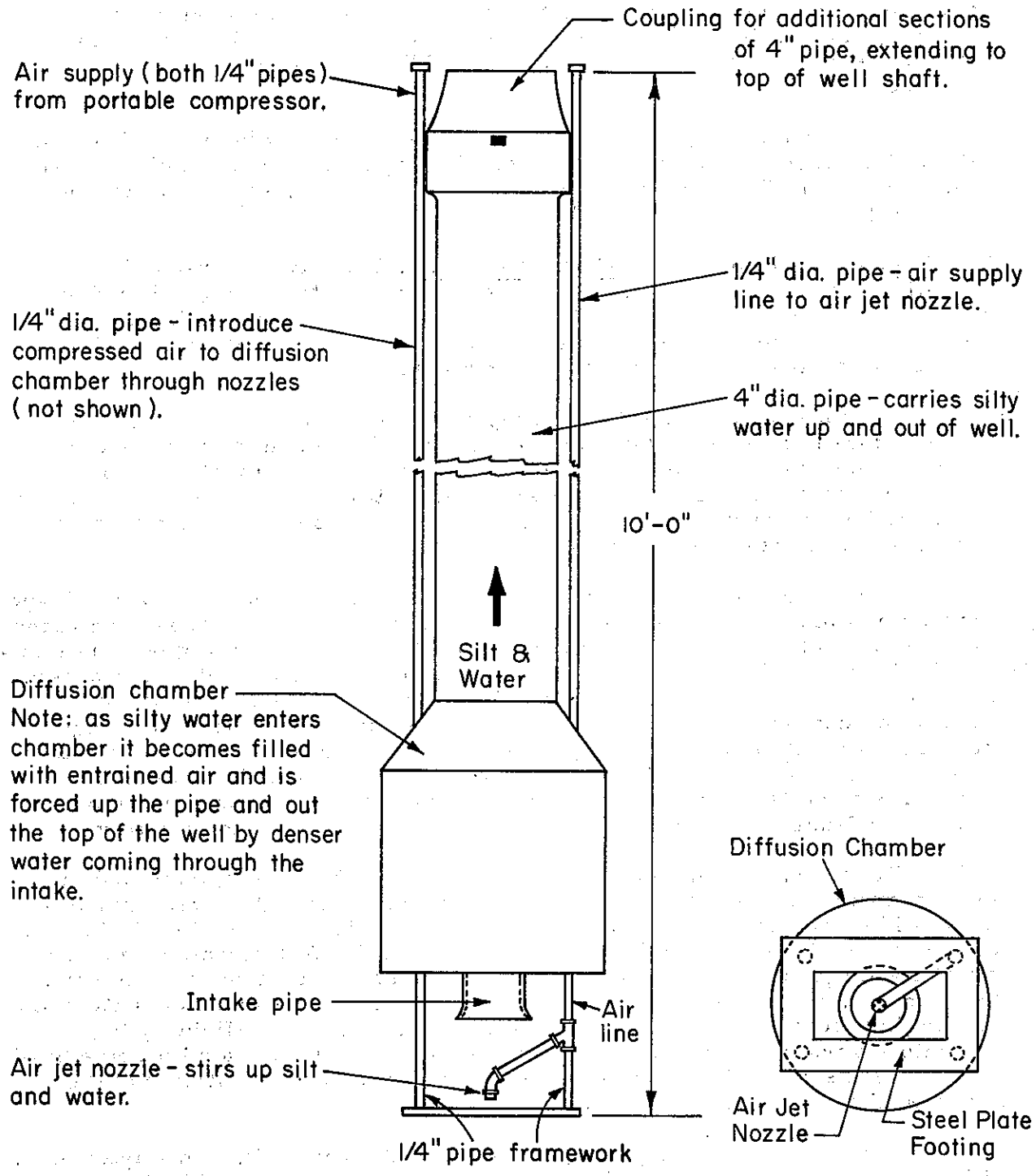

COMPRESSED-AIR JET WELL CLEANER

(Similar to District 10 design)

ClibPDF - www.fastio.com

casing perforations is forced out the top of the well. By cleaning wells in this manner, they will operate fairly efficiently for several years, providing that drainage was good initially. It was noted, however, that oil and grease will plug up wells quite rapidly, regardless of maintenance practices.

Well and basin performance varies considerably between different sites. Drainage is poor in areas where boring logs indicate a high water table (less than 10 ft from the surface) or silt and clay strata within the upper 10 feet.

The Fresno Municipal Flood Control District. The City of Fresno has established the Fresno Municipal Flood Control District to handle urban and suburban storm drainage. Blair-Westfall Associates of Fresno, consulting engineers engaged by the District, are in charge of planning and design of drainage installations for the area.

To cope with the city's growing drainage problems, a series of several dozen drainage basins are currently being planned to dispose of runoff. The basin drainage system was selected as the most economical alternative to a more conventional and costly storm sewer network. Basin sizes will range from 3 to 40 acres, with 10 acres being allotted to drain each 400-500 acres of residential area.

The basins are designed to hold the runoff from one 48-hour, 100-year frequency storm. The maximum depth of standing water in these facilities is expected to be 6 to 8 feet. In each instance, a large holding pond is combined with a smaller drainage basin so that silt can settle out of the water. In some cases, drain wells are drilled into the basin floor, filled with gravel and covered with a sand filter bed. Basin surfaces are thoroughly ripped to a depth of 2 to 2 1/2 feet, following construction, to loosen the topsoil or break up hardpan layers. Ponds which are located in residential areas are to be landscaped and serve as parks during the summer months. These are fenced and locked from November to May for public safety.

Thus far, four drainage installations have been completed and put into operation in Fresno. Two of these facilities were observed approximately 10 days after the February 1969 storm period, the wettest February on record for Fresno. Both basins were still quite full of water; one had overflowed during the previous storm sequence. Aside from the unusally heavy rains, the biggest problem appeared to be the low-permeability soils underlying the basins. Soil profiles in those areas, east of Highway 99, indicate layers of silty sand separated by silt or clay strata with some hardpan. These strata of silt or clay restrict downward percolation and the soil absorbs water rather slowly.

One of these drainage basins, located at Fresno St. and Dayton Ave. (Figure 6), is well-landscaped and looks quite attractive. Sideslopes are gentle and the entire area is covered with a heavy turf of Bermuda grass. The grass appeared to have withstood the recent inundation well, though covered with an appreciable quantity of silt. Several trees had also been planted at higher elevations where submergence would be infrequent. A green chain link fence surrounds the installation.

ClibPDF - www.fastio.com

Figure 6

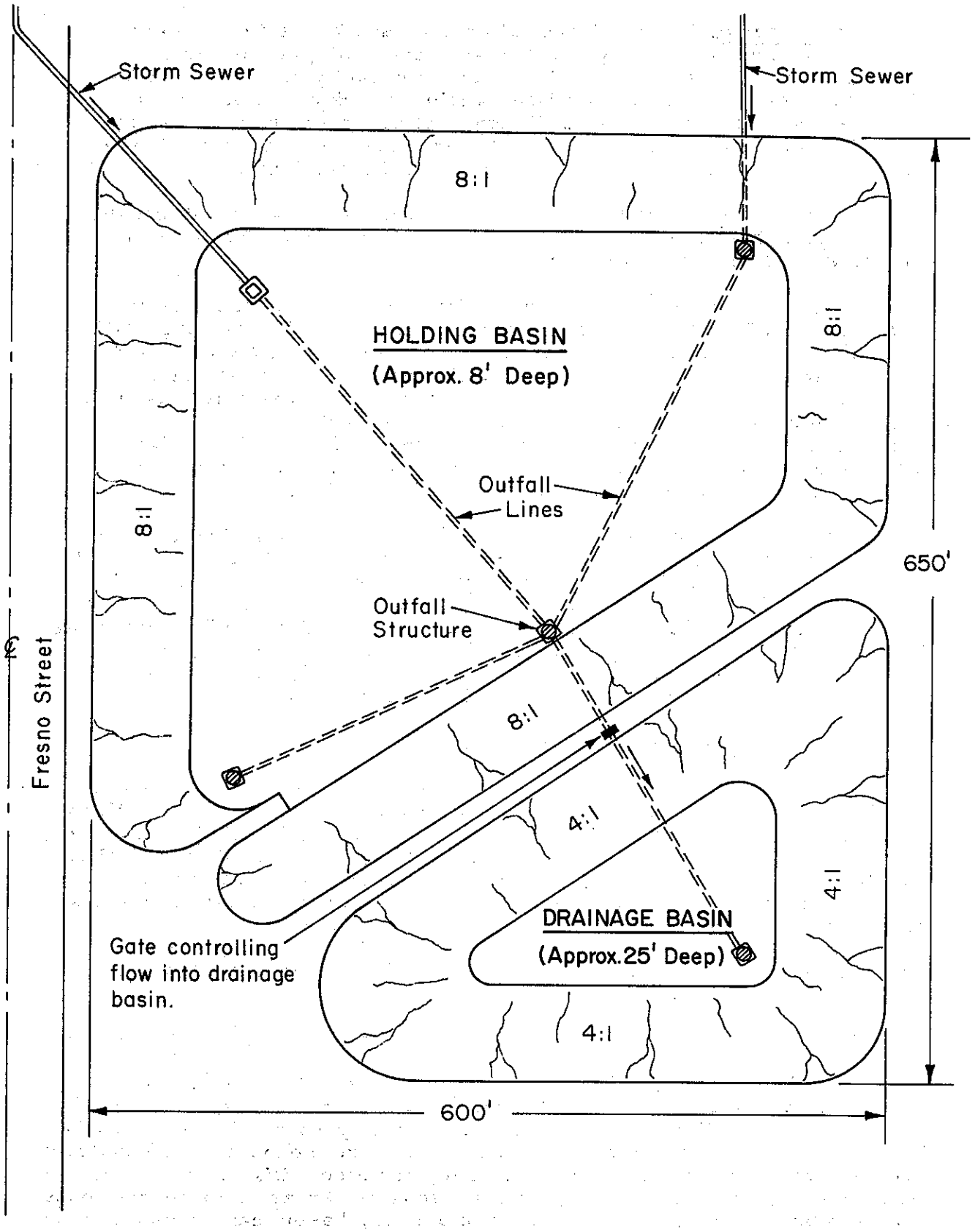

TYPICAL PARK-TYPE BASIN DRAINAGE INSTALLATION

(Fresno Metropolitan Flood Control District)

ClibPDF - www.fastio.com

Stanislaus County. The Stanislaus County Public Works Department installs drain wells in many residential areas to dispose of storm runoff. These wells have a limited storage capacity and a low infiltration rate. They serve to drain intersections which act as temporary storage basins during a storm. Depth of standing water is limited to the height of the gutter, 6 inches. Excess water runs to the next lower intersection, and is eventually passed out of the subdivision.

Wells are generally 30 ft to 50 ft deep, and often extend into the water table. No health or groundwater pollution problems have been attributed to these drain wells as yet.

The County does little or no maintenance work on their wells, assuming that it is less expensive to drill a new well ($550-$600, 1969) when the old ones become blocked with silt and trash. Effective well life averages about two years. The wells have drop inlet structures which serve as catch basins, Figure 7, but apparently only the heaviest suspended solids are caught, since the wells still clog with silt fairly rapidly. About 1/3 of the County installations perform well, draining away standing water within 24 hours after a storm. Another 1/3 drain away in about 48 hours, while the rest are ineffective.

Subdivisions usually install their own drainage facilities. Wells are similar to the County's but are regularly maintained, and as a result give longer service. Basins are also used. One particular subdivision in Modesto utilizes a small basin, the size of a single lot, to drain a four-block area. The 8-ft. deep basin has three gravel filled wells penetrating the hardpan layer at the bottom. Ten days after the February, 1969, storm sequence, one of the wettest periods on record, the basin was completely dry with no puddles remaining on the bottom.

DESIGN AND MAINTENANCE CRITERIA

The first step in the design of drainage facilities is to determine which type of disposal installation to use: basin, drain well, conventional drainage system, or some combination of the three. The choice depends on several factors, including: legal restrictions, cost, land availability, runoff volume, surface soils, substrata, hydrologic conditions and possible health or safety hazards. Even the quality of surface runoff may have to be taken into account. There would seldom be two situations alike; each installation may require special planning and consideration. Specific design considerations are described in the following pages.

Basins

Basins have some disadvantages as well as advantages. They require a considerable amount of land, anywhere from 1/4 to 10 acres, and may be aesthetically displeasing, particularly when filled with standing water. On the other hand, drainage basins are inexpensive to construct and require very little maintenance. They can also utilize waste space within the highway right of way, such as shoulder areas, interchange loops, and even borrow pits. Perhaps most important, basins can provide a large storage capacity which is essential where high-intensity rainfall and large runoff volumes occur. Sometimes only temporary runoff storage is needed and once the critical storm period has passed, basin storage can be released

ClibPDF - www.fastio.com

Figure 7

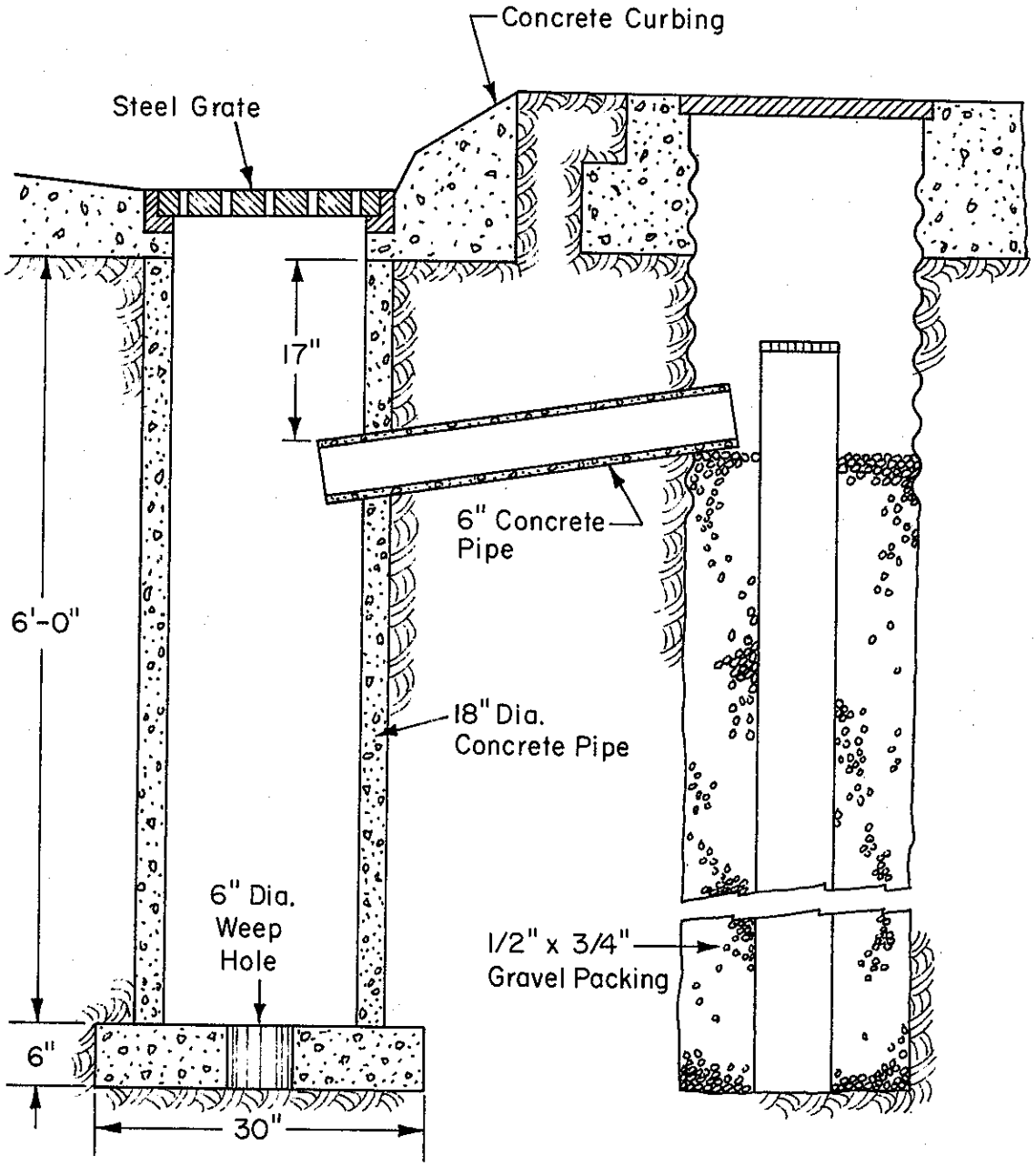

DROP INLET

DRAIN WELL
(Similar to Fig. 4)

DRAIN WELL WITH DROP INLET UNIT
(Similar to the Stanislaus Co. Standard Drainage Unit)

ClibPDF - www.fastio.com

into a nearby watercourse. In this event, infiltration is unimportant and need not be considered in the design of the basin.

Design and technical considerations. The most important consideration in basin design is the storage volume required. The basin must have sufficient capacity to contain all the runoff from the area it drains during a specified storm sequence without taking infiltration into account. The area drained often includes more than just the highway surface in the immediate vicinity; water draining naturally onto the right of way from adjoining frontage property must be accommodated as well. However, adjacent property owners cannot artifically divert water onto the right of way, as they can also be held liable for adversely altering natural flows.*

The specified storm sequence for which the basin is designed should be large enough to provide a factor of safety. Two consecutive storms having 10-year frequencies of occurrence generally have been considered adequate as a design sequence, unless drainage rates are excessively slow. The designer must take into account the fact that runoff characteristics can be noticeably altered by unique features or conditions within the small section of roadway being considered; runoff coefficients may have to be modified accordingly.

Basin shape depends largely on the configuration of the available land lying within loops, next to on or off-ramps, along shoulders, etc. In most cases, no additional right of way need be acquired expressly for a basin installation. During construction of the roadway, basin sites may be used as sources of fill material to cut the cost of importing borrow.

In general, the shapes providing the greatest side area will drain the most rapidly. An increase in basin floor area will not bring about a corresponding increase in the rate of drainage: lateral drainage through the basin wall is almost always more rapid than vertical percolation, and the bottom becomes less pervious as silt deposits build up. In a rectangular basin, for example, it was determined that the rate of infiltration per unit floor area is inversely proportional to the square root of the area, assuming a constant depth (13, pp 355-360). To dispose of a given quantity of water, it would be better to have several small basins than one large one of the same depth.

Increased depth will provide greater lateral infiltration area, and also a higher effective head to the permeable strata when the basin contains standing water; both of which produce better drainage rates. In this light, relatively small, deep basins are more effective than larger, shallow ones.

A detailed analysis of the basin site should be carried out to determine the suitability of the location. Borings need to be made to identify the types of soils and the positions of clay and hardpan layers, as well as pervious strata. It may be decided that wells, drains, or trenches of some form will be necessary to penetrate the impervious layers or to increase the infiltration rate of the basin to a more acceptable level. Ground surface

*See Division of Highways Circular Letter #68-21, 10-31-68, for legal details pertaining to surface water drainage.

ClibPDF - www.fastio.com

slopes should be considered since steeper surrounding terrain can markedly increase recharge rates in some soils, as indicated in Figure 8. Depth of the ground water table should also be checked since high water tables decrease drainage rates.

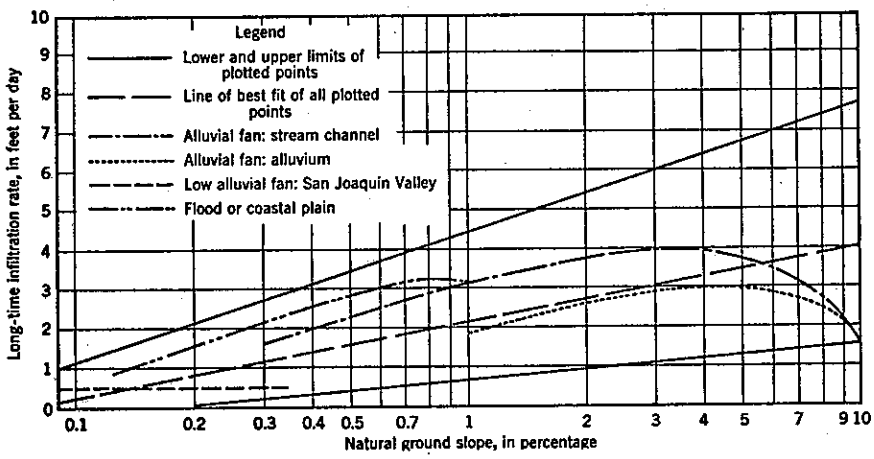

Figure 8 - Relationship between infiltration rates and natural ground slopes for various soil types. Reprinted from: Richter, R. C., Chun, R. Y. D., "Artificial Recharge in California," ASCE-Trans., Vol. 126, Part III, p. 755.

Infiltration rates can be estimated by the use of some form of infiltrometer. An infiltrometer is basically a small model basin consisting of a ring, a section of pipe, or even a walled test pond, as shown in Figure 9. The test pond, for example, may be a small (say 6 ft x 6 ft) bottomless tank having 4 wood or sheet metal walls about 2 or 3 feet high inserted a foot into the soil, leaving a foot or two above the ground. The pond is filled to a given depth with water and maintained at a constant head with a float valve. Water is generally applied continuously for a week or even longer to measure long-term infiltration rates. By measuring the water inflow over each 24-hour period, the infiltration in feet per day* can be calculated. Tests using pipes and rings are conducted in a similar manner (7, pp 26-35).

---

*A unit foot per day is defined as the volume of water drained out of a basin during a 24 hour period, divided by the floor area of the basin, or

$$\frac{\text{Volume Infiltrating/24 hr.}}{\text{Area}}$$

A one foot water level drop over a 24 hr. period in a basin filled with standing

(contd)

ClibPDF - www.fastio.com

Figure 9

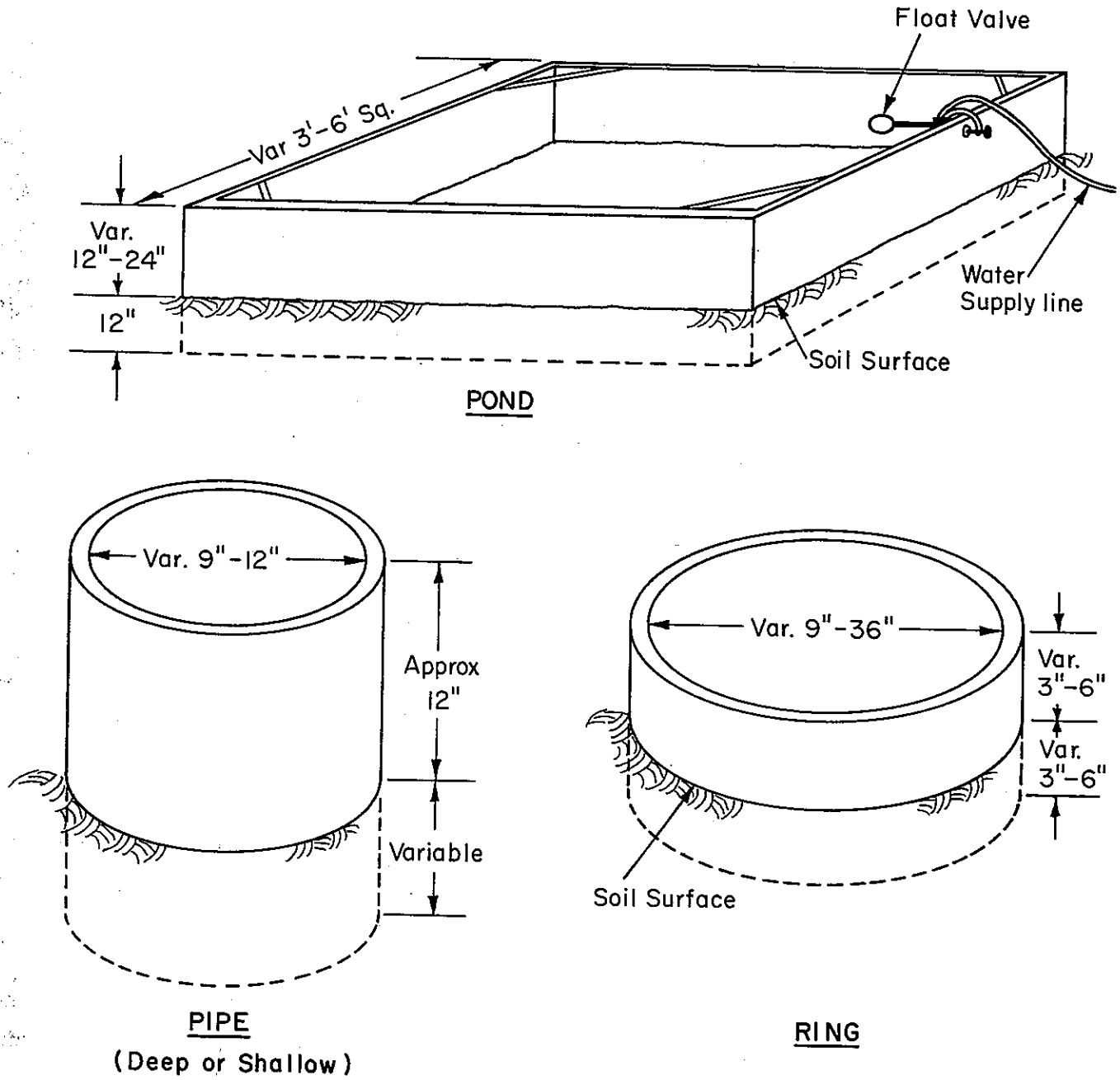

Note: Float valves used on both pipe and ring infiltrometers to regulate water level.

INFILTROMETER TYPES

ClibPDF - www.fastio.com

Actual basin infiltration rates will probably not be identical to the rates determined by infiltrometer tests due to the gross differences in scale and relative drainage conditions. The rate indicated by an infiltrometer test may be most useful when applied in a comparative manner. For example, if a test is made at a location where drainage rates and soil conditions are known, the correlation of test results and basin drainage rates may be used to interpret test results at other locations in conjunction with some knowledge of the relative soil profiles.

One of the differences in relative drainage conditions between basins and infiltrometers occurs when the small outflow of the infiltrometer drains laterally through a relatively shallow, pervious topsoil which is underlain by a more impermeable strata. If soil logs indicate such a strata within the upper 10 ft., a buffer strip or buffer zone should be employed. A buffer zone consists of an outer compartment encircling the infiltrometer, created by the addition of a second wall, ring or pipe, as in Figure 10-B. If water levels are maintained at the same elevation in both compartments throughout the test, and only the flow from the inner compartment is measured, the results will be more comparable to those which may be expected of the basin. The flow from the outer compartment will theoretically restrict lateral drainage of water from the infiltrometer itself. Another way to prevent lateral drainage in the more porous topsoil is to use a long pipe infiltrometer (Figure 10-A), extending directly into the more impervious layer below.

In general, even when the infiltrometer test is made in the same soil strata into which the basin is expected to drain, the infiltration rate of the basin can be expected to be less than that indicated by the infiltrometer. This is due to the difference in scale between the infiltrometer and the proposed basin. The greatest discrepancy in percolation rates might be expected in stratified alluvial soils. In these soils, the horizontal permeability is usually greater than the vertical. This creates a situation similar to that discussed previously where a pervious soil is underlain by a more impermeable one. In a given soil, therefore, the lower the ratio of basin perimeter to area, the greater the decrease in infiltration rate.

Long-term infiltration rates (one week or more) for soils found in California flood or coastal plains and alluvial fans will range from 5 ft per day to almost zero, depending on the exact location. A long-term rate of approximately 0.5 ft per day should be the minimum acceptable for basin design value however. Excessively slow drainage involves the risk of flooding, should another storm add runoff to an already full basin, with the consequent possibility of traffic hazards and property loss.

The most common cause of reduction in infiltration rates is the buildup of silt and water-suspended material on the basin floor. "Silting up" of basins can be prevented by using several settlement or filtration techniques.

---

water would indicate an infiltration rate of 1 ft/day.

This unit is a convenient measure of the infiltration rate if it is assumed that most infiltration occurs through the basin floor. Under such an assumption the infiltration rate will vary little, if at all, with varying basin size. This assumption is generally untrue, of course, as evidenced on pp. 20-21.

ClibPDF - www.fastio.com

Figure 10

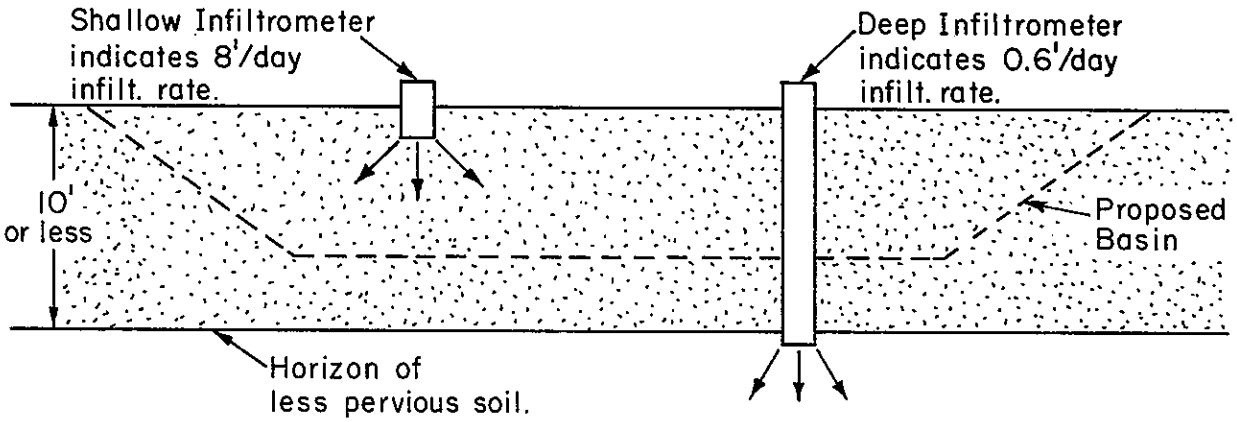

A. Type of infiltrometer test employed depends on proposed basin depth and thickness of pervious strata. A deep infiltrometer test provides more realistic values when a shallow permeable layer overlays a less pervious one.

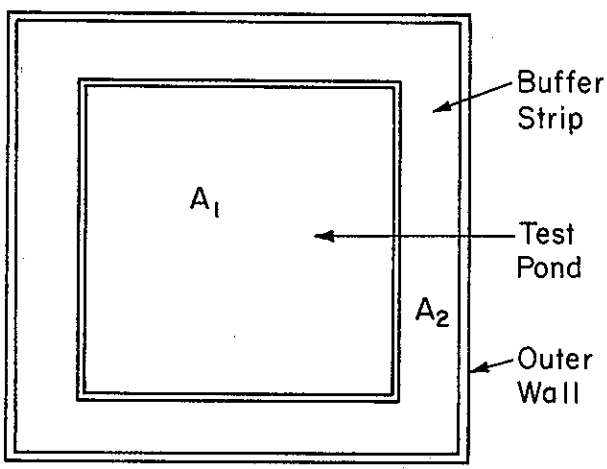

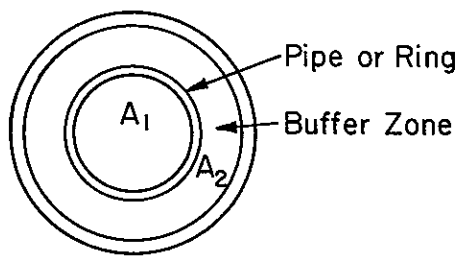

AREA A_1 — AREA A_2

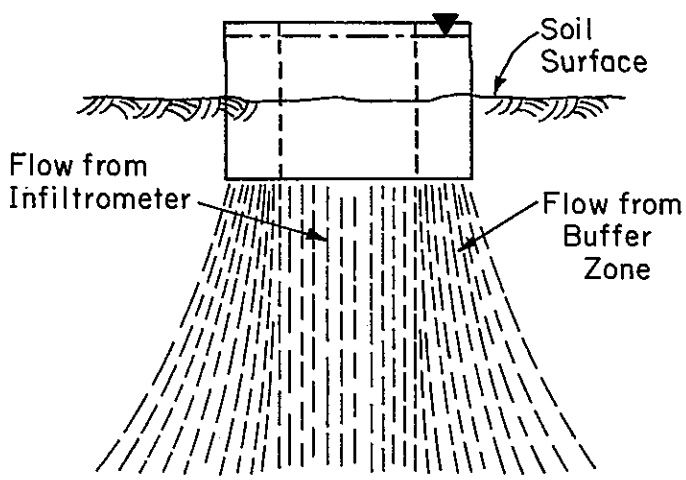

B. Buffer zones also provide more accurate infiltration values when a shallow, pervious stratum covers less permeable soil. Flow from buffer zone prevents infiltrometer flow from moving laterally through pervious stratum.

ClibPDF - www.fastio.com

Holding ponds can be used in conjunction with recharge basins so that suspended solids will settle out before the water is released into the recharge basin for drainage. These ponds must be large enough to hold storm runoff for a sufficient settlement time, which could vary from one or two hours to a day or more depending on water quality. Holding ponds are usually larger and shallower than the actual drainage basin, and more than one pond may be used.

Chemical flocculants could be used to speed up settlement in holding ponds. One water conservation district found that a chemical called Nalco 600 (Nalco Chem. Co.) caused 85% of suspended solids to settle out when mixed with inflowing water and held for one hour. Costs totaled $2.54 per acre-ft of water treated (9, pp 1-17). Flocculants should be added to the runoff water within the settlement pond inlet pipe or culvert where turbulence will ensure more thorough mixing. After suspended matter has flocculated and settled in the pond, the water may be released into the drainage basin for disposal. Although chemical flocculants may be impractical for general highway use, they might well be considered in special cases.

Basins may be lined with filter material to help prevent the build-up of impervious silt deposits on the soil surface. A 6-in layer of pea gravel on the basin floor will effectively screen out suspended solids and keep infiltration rates high (13, pp 355-360). The gravel layer can be economically replaced or cleaned when it becomes clogged with silt; annual maintenance will usually suffice.

Grass also serves as a good filter material, particularly Bermuda grass which is extremely hardy and can withstand several days of submergence. If silty water is allowed to trickle through Bermuda, most of the suspended material is strained out within a few yards of surface travel (16, pp 35-37). Well established Bermuda on a basin floor will grow up through silt deposits, forming a porous turf and preventing the formation of an impermeable layer. Bermuda grass filtration would work well with long, narrow shoulder-type basins where highway runoff flows down a grassy slope between the roadway and the basin. Bermuda demands very little attention besides summer irrigation, and in the summer, looks attractive when trimmed. Planting on basin side slopes will also prevent erosion.

Silt sealing of basins can also be remedied by scraping the silt from the bottom of the pond or by cultivation(discing). Cultivation breaks up the silt deposits and loosens the topsoil, often improving drainage considerably. It has been observed, however, that cultivation may bring only short-lived improvement, or even be detrimental to infiltration since some soils become less pervious when disturbed.

Besides silt buildup, algal or bacterial growth will inhibit infiltration. Chlorination of the runoff water is one solution, but it is more practical to make certain the basin dries out between storms and during summer months. Algae and bacteria will die off during dry spells, provided no standing water or puddles are allowed to remain.

Air clogging and certain chemical reactions can also restrict drainage. If entrained air is present in runoff water, air bubbles will lodge between soil particles, reducing percolation. It has also been found that high salt concentrations in the soil lower permeability. Under certain

ClibPDF - www.fastio.com

conditions, chemicals present in the soil or water will deflocculate colloidal soil particles, resulting in a very fine, impervious soil structure. Sodium, acting on silty or clayey soils is the worst offender. Runoff water would be most apt to have a high sodium concentration in areas where roads are salted to melt ice during the winter. Generally, if infiltrating water has a high "sodium percentage" (i.e., the quantity of sodium divided by the sum of the quantities of calcium, magnesium, sodium and potassium, all in milliequivalents per liter) greater than 50, it will have a deleterious effect on coloidal soils. The application of certain chemicals (e.g., gypsum) might be beneficial in this situation, but the effect would only be temporary. It is better to avoid any chemical contamination as much as possible.

Certain steps may be taken to insure that the basin surfaces remain loose and porous. During basin construction, it is important that all heavy equipment be kept off the basin floor to avoid undesirable compaction. If the surface soil particles tend to swell and reduce pore area, planting a Bermuda grass cover will keep the soil pervious. Experiments have shown that discing or spading a 6-in. layer of coarse organic trash (such as cotton boll hulls, leaves, stems, etc.) into the floor soil will cause infiltration rates to actually increase continually over a period of several years (9, p. 47). Soon after burying the coarse organic trash, the basin floor should be soaked or inundated for a brief period, then allowed to dry. This causes the trash to decay rapidly, loosening the upper soil layer. Another procedure, good for clay and hardpan surfaces, is to rip or scarify the top 2-3 ft of soil and thereby loosen the impervious upper stratum.

As mentioned previously, trenches, sand drains or wells may be used in conjunction with basins to penetrate low-permeability strata near the surface. Trenches are usually 6-12 ft wide and at least 6 ft deep, and backfilled with pervious gravel or coarse sand. Filter material, graded according to the standard criteria, should be mounded over the top of the backfilled trench to a depth of approximately two feet.* This filter layer will prevent the pervious backfill material from becoming clogged if the filter material layer is designed to prevent the intrusion of the silt-sized particles suspended in the storm runoff water. Sand drains are actually shallow, uncased wells filled with coarse sand, operating on the same principle as the trench drain. They may be located beneath a backfilled trench or a shallow bed of filter material. Periodic removal and replacement of the trench and drain filter layers is usually necessary, as they eventually become sealed with water-borne silt and sediment. If trenches or sand drains extend below the highest level of a fluctuating ground water table, and are located in a silty soil, they should be completely backfilled with filter material to avoid silt migration from the adjacent soil, and subsequent clogging.

When selecting pervious backfill for drain wells and sand drains, it is important to realize that certain gradings which fall within the typical

*The grading of well and basin filter material can be based on the standard D_{15}-D_{85} criteria. These are outlined in several soil mechanics texts, as well as the following: Sherard, J. L., et. al., Earth and Earth-Rock Dams, John Wiley & Sons, New York, 1963, p. 84; Cedergren, H. R., Seepage, Drainage, and Flow Nets, John Wiley & Sons, 1967, p. 175.

ClibPDF - www.fastio.com

specification limits for ordinary permeable materials may be relatively impervious with respect to this application. Also, some materials which are ordinarily considered free draining, are in fact, quite impermeable. Some beach and concrete sands fall in this classification.* This factor is often overlooked and drains may be filled with materials which actually inhibit drainage. Ordinarily, the added expense required to provide a properly graded aggregate which would insure good permeability is negligible in the case of a drain well or sand drain.

Aesthetic and social considerations. Landscaping of basin facilities creates a much more pleasing appearance and should always be considered when drainage basins are located near residential areas. Without landscaping and maintenance, a basin will accumulate the inevitable old tires, broken glass, and trash, becoming a muddy community nuisance. The landscaped basin can be used as a park or recreation area during dry months, as is done in the Fresno-Bakersfield area. Such a project requires plants, trees, and facilities capable of withstanding temporary inundation. Buildings would have to be located on high ground and basin sides gently sloped to give a parklike appearance. Very steep basin walls would theoretically provide maximum infiltration rates since little silt buildup could occur and horizontal drainage would be unimpeded. However, basin sides should not be steeper than a 2:1 slope even if no landscaping is planned. Flatter slopes prevent erosion and facilitate vegetation growth, proving more beneficial in the long run.

During summer months when the grass in these park basins must be sprinkled and additional inflow may occur from domestic watering and freeway landscape irrigation, some water may be found standing at low points in the basin. This situation existed in the Wilson Park Basin in Bakersfield (4, pp 6-7) and resulted in excessive algae growth. A central drain was installed which carried water into underground, open-jointed concrete pipes, out of which the water could seep into the sandy subsoil.

An important factor in the design of basins is the consideration of public health and safety. First, there is a possibility of ground water contamination. Fortunately the natural filtration of runoff water by the soil removes most harmful substances before they can reach the water-bearing aquifer. Nearly all pathogenic bacteria and many chemicals are filtered out within 3- 10 ft during vertical percolation and within 50-200 ft of lateral water movement (19, pp. 402-411). However, in one large-scale ground water recharge project in the eastern U.S., bacteria concentrations in nearby water supply wells increased noticeably (13, pp. 355-360). It was found that a chlorine dosage of 5-10 ppm, applied to the recharge water (from a local river) entering the basin, was adequate to kill the bacteria. Should such a problem ever occur with an infiltration drainage facility, a similar chlorine treatment should be recommended.

There is also a remote chance of pollution from some toxic or harmful substance draining into the basin. As an example, a truckload of gasoline, insecticide, or some type of poison could be spilled onto the highway and flow into a drainage installation. Agricultural runoff containing dissolved chemical fertilizers or other treatments, could also reach the ground water through basin disposal. Nevertheless, contamination of subterranean water supplies by basin drainage is considered to be extremely unlikely. To date there have been no ground water pollution problems in northern California, of which the writers are aware, attributable to

*Cedergren, Op. Cit. p. 16.

ClibPDF - www.fastio.com

infiltration basins. Most potable water is pumped from aquifers at considerable depths, and disposal near the surface should have little effect on water quality in these deeper aquifers.

A second health aspect involves mosquito control. Warm spring rainy periods combined with puddles and standing water in basins provide excellent mosquito breeding conditions. Basins should be regularly sprayed at these times to kill the growing larvae.

Third, water-filled basins can be a hazard to human and animal life. The installations should be fenced and posted to protect the public and limit the liability of the agency. In soft or sandy soil, inquisitive children can easily dig under ordinary fences and gain access to the basin area. Fencing should be extended 3 to 4 feet below the ground surface under such circumstances.

Wells

Drainage wells are basically water supply wells operating in reverse, although, in practice, they have many unique features and problems. There are also several types, ranging from simple gravel-filled shafts to highly sophisticated pump injection wells. Like basins, they have both good and bad features. Wells require a minimum of space and may be designed with very little unsightly surface structure. They can be extended through impervious soils down to permeable sand or gravel, and will drain a small area fairly rapidly when surface runoff is of satisfactory quality.

Unfortunately, wells clog up very easily when the water contains silt or sediment, and cleaning or restoration can be difficult. Drainage wells are readily capable of polluting ground water supplies and health departments have strict regulations regarding them. Capacity for drainage is difficult to predict: one well may have a good rate of infiltration, while another 50 ft away will drain very poorly. The cost of well construction and maintenance makes well drainage a fairly expensive method of disposal. Basins are much more economical in terms of cost per unit volume of water drained. Normally, a drain well should only be considered for disposal of small quantities of water, or as a supplement to recharge basins or some other type of disposal system.

As with basins, the first step in well design is to calculate storm water runoff volumes and intensities. Knowing runoff characteristics, the requirements for storage volume and well drainage capacity can be determined. Here again, the two 10-year frequency storms may be used as the basis for design. As the wells themselves have little volume for storage, they should be situated in a ditch or pond where overflow can be temporarily contained. Large diameter underground sumps located above or adjacent to smaller well shafts might provide another solution to temporary storage.

An analysis of the well site and soil properties is performed in a manner similar to the analysis made in basin design, including determination of soil profiles, groundwater elevation, etc. Measurement of well drainage capacity poses a problem however. Several tests have been

ClibPDF - www.fastio.com

developed by ASTM (12, pp. 142-159) and others to determine soil permeability coefficients using small infiltration wells, but apparently no tests have been specifically designed to measure the flow out of a drain well situated above the water table.

Until such a test procedure is developed, the only means of predicting well performance at a particular site would seem to entail the actual construction of an 8-12-inch diameter cased well and direct measurement of its infiltration flow. This type of infiltration analysis could be performed in much the same manner as an infiltrometer test - the well being filled with water and maintained at a constant head over a period of 1-2 weeks to measure long-term drainage. Infiltration rates for larger diameter wells can also be estimated from the results of this analysis. If it is assumed that there is a uniform flow per unit area through the shaft walls within the permeable strata, infiltration rates* should increase roughly in proportion to increasing shaft diameter.

When estimating well drainage rates, the effect of interference from other nearby wells should be considered. If drain wells are installed in groups, no individual well will have as large an infiltration capacity as it would have when isolated from the others. As ground water builds up beneath each well, the outflow through every installation becomes partially restricted by the mounded water from neighboring wells. It is impossible to accurately predict a well's loss of drainage capacity due to mounding interference, but some lowering of individual well capacity must be expected when drain wells are clustered. The further apart these facilities are spaced, the less infiltration restriction there will be.

Following the analysis and selection of a suitable site, the well's size and type are determined. There are basically two types of wells suitable for highway surface drainage: the gravel or sand-filled shaft, and the cased well. The simpler gravel and sand-filled wells are mostly used with drainage basins and serve to penetrate low-permeability strata near the surface or to increase the rate of drainage. Like the trenches and sand drains mentioned previously, these wells should be backfilled with coarse sand or pervious gravel, with a layer of filter material placed at the top of the shaft. The entire well is backfilled with filter material under the soil and ground water conditions outlined earlier(see p.17).

---

* "Infiltration rates" or "drainage rates", as applied to wells, are defined in this discussion in terms of some convenient volume per unit time measurement, such as gallons per day. Units of feet per day, used to measure basin infiltration, are meaningless when applied to well drainage, because the water level drop within the well shaft is not directly proportional to the volume of water drained for shafts of different diameter. As an example, consider two wells having shaft diameters of 1 and 2 feet:

Well #1	Well #2
$r = 1$ ft	$r = 2$ ft
$A = \pi$ ft^2	$A = 4\pi$ ft^2
water level drop = 1 ft	water level drop - 1/4 ft
volume drained = $Ah_1 = \pi$ ft^3	volume drained - $Ah_2 = \pi$ ft^3

Note that in the larger well, the water level drops only 1/4 as much as it does in the smaller shaft, but the same volume of water is drained in both instances.

ClibPDF - www.fastio.com

These wells are inexpensive and usually perform adequately, providing the top filter layer is replaced whenever it becomes silt clogged.

Cased wells are more effective, though more costly, when water is of good quality, and if the installations are properly maintained. The casing usually consists of PMP running the length of the well shaft. It is recommended that perforations be limited to regions of permeable soil strata, as this tends to minimize the amount of silt and fine soil washing into the well through perforations. It is desirable and often necessary that several inches of sand or gravel packing be placed around drain well casings. , Coarse sand packing is easier to clean when the compressed-air jet redevelopment method is used. A typical cased well has a 9-12 inch diameter PMP surrounded by packing in a 36-in. shaft, although some are larger. In the case of sand or gravel-filled drains, shaft diameters usually range from 24 to 48 inches.

As to well depth, it is obviously necessary to reach pervious material. If the runoff water is to be properly treated, and with the approval of the local public health office, the aquifer should be partially penetrated to achieve the best drainage and facilitate maintenance. But if no treatment is planned, the shaft must be terminated some distance above the water table. The public health office should be consulted regarding the amount of aquifer clearance required.

If a 10 ft aquifer clearance is stipulated, as is often the case, the ground water surface must be at least 20 ft below the ground surface, since the well itself must be at least 10 ft deep to perform satisfactorily. If no ground water is encountered, Northern California experience indicates that 50 to 75 ft is deep enough for good drainage provided the well reaches pervious sand strata. Gravel or sand-filled drains are usually used to penetrate clay or hardpan layers as an infiltration aid to basins and therefore do not have to be very deep. In the Sacramento Valley, a drain depth of 15 to 25 ft is often enough to reach sand deposits.

Enough wells should be drilled in any one drainage area so that, knowing the approximate infiltration rates and runoff volumes, all standing water is drained away within a reasonable amount of time. If wells are situated in shallow ditches or ponds within the median strip or immediately adjacent to the road shoulder, standing water is a hazard and should generally be completely removed in 24 to 48 hrs. following a storm. For wells being used in conjunction with drainage basins, the time limit is of less importance, but the combined infiltration rate should still average 0.5 ft per day or greater.

Clogging due to silt and suspended material is much more critical in wells (cased) than in basins, as stated previously. Filters or sedimentation basins and special maintenance procedures will help prevent silting up of wells. Underground sediment traps in the form of drop inlets are frequently used with small wells, shown in Figure 6, but these inlets do little more than trap the heaviest dirt and trash, allowing finer suspended matter to flow into the well. Larger settling basins hold water longer for more efficient silt removal, and provide some temporary storage volume at the same time.

ClibPDF - www.fastio.com

Screens should always be placed over well openings to keep out grass, leaves and other coarse trash. A properly designed silt filter could make a well nearly clogproof, but insufficient research has been done on this problem. Various types of filters have been tried with some success, but no designs have met wide acceptance. One filter which has given good experimental results consists of two concentric cylindrical screens, the space between them being filled with crushed volcanic rock or lava (17, pp 5-8). Although this particular design was used for large-scale groundwater recharge through an injection well, such a filter might be placed around the opening of a well casing, and cleaned after each major storm or rainy period. Other possible filter designs might consist of a shallow drop-inlet filled with sand or gravel, or a filter material of synthetic foam being placed in or over the well shaft entrance.

The well drilling operation itself may also be a cause of silt clogging. During drilling a layer of fine-grained material is usually deposited on the shaft wall which restricts permeability considerably. Before the well is put into operation, this material should be removed by jetting or surging.

Besides silt, algal and bacterial growth will likewise impede drainage, particularly if the well is frequently used or contains standing water much of the time. Long drying-out periods are very beneficial but it may be necessary to add calcium hypochlorite, copper sulfate or chlorine to the water in the well to kill off biological growths.

The same air clogging and chemical reactions which retard basin infiltration will affect wells, though to a greater extent. One problem unique to wells is chemical encrustation of the casing, with consequent blocking up of the perforations or slots in the PMP. Alternate wetting and drying builds up a scale of water-soluble minerals, which may be broken up or dissolved by jetting or acid treatments.

One cleaning method, compressed air jetting, has already been mentioned. Surging and pumping is another means of removing silt and redeveloping a well. This process involves partially filling the well with water, and then pumping a snug-fitting plunger up and down within the casing. This action loosens silt and sediment lodged in the packing and immediately adjacent soil, and pulls it into the well. Surging is immediately followed by pumping silt-laden water from the bottom of the well. If the well is situated in clayey soil, or if clay materials have been washed into the well, the surging and air jetting methods will be more effective if sodium polyphosphate (calgon) is added to the water in the well prior to cleaning or redeveloping. A 2-5 ppm concentration of this chemical will deflocculate clay particles in the well and immediately surrounding soil, and the clay can be pumped or jetted out very easily.

As a final note, the importance of regular well maintenance cannot be overstressed. Periodic cleaning and redevelopment is essential, and chlorination or other chemical treatments may be necessary if biological growth or encrustation impedes drainage. Should there be any signs of bacterial ground water contamination, a 5-10 ppm dosage of chlorine should be added to the wells in question.

ClibPDF - www.fastio.com

ANNOTATED BIBLIOGRAPHY

1. Baumann, P., "Theoretical and Practical Aspects of Well Recharge," Journal of the Hydraulics Division, Proceedings of the American Society of Civil Engineers, Vol. 87, No. HY6, Nov. 1961, pt. 1, paper 2992, pp. 155-70.

   Recharge wells are far more complex than water wells in reverse according to theoretical hydraulic considerations. Topics discussed are: recharge well performance requirements, construction, operation and maintenance; purposes of recharge, recharge contamination and purification.

2. Baumann, P., "Basin Recharge," Transactions of the American Society of Civil Engineers, Vol. 122, 1957, pp. 458-501.

   Behavior of groundwater mounds below various shaped basins and wells. Mound shapes determined experimentally. Emphasis on prevention of salt-water intrusion in Los Angeles area by forming fresh water barriers. Illustrations of groundwater mounding and movement.

3. Behnke, J., Schiff, L., "Hydraulic Conductivity of Uniform, Stratified and Mixed Sands," Journal of Geophysical Research, Vol. 68, No. 16, Aug. 15, 1963, pp. 4769-75.

   Soil considerations in design of infiltration facilities; hydraulic conductivity and velocity through various grades of sand, porosity and arrangement of the soil-water interface and the corresponding effects on infiltration.

4. Gong-Guy, G., "Disposal of Storm Water by Ground Water Recharge," Proceedings of the California Department of Water Resources Biennial Conference on Ground Water Recharge and Ground Water Basin Management, 1963, pp. 1-10.

   The Calif. Division of Highways District 06 in Fresno has built several recharge basins and wells in the Fresno-Bakersfield area for disposal of highway surface runoff. Design criteria, maintenance procedures and performance are discussed, as well as problems encountered. This method of disposal proved to be a practical and economical means of storm water drainage.

5. Groot, C. R., "Feasibility of Artificial Recharge at Newark, Del.", Journal of the American Waterworks Association, Vol. 52, No. 6, June 1960, pp 749-55.

   Tests to determine feasibility of recharging local aquifer; 24 day infiltration tests were made near the city's principal well field with double-ring infiltrometer: infiltration rates decreased from an initial max. of 8 ft/day to 3 ft/day but were still good enough for basin recharge purposes.

6. Laverty, F. B., "Ground Water Recharge," Journal of the American Waterworks Association, Vol. 44, No. 8, Aug. 1952, pp. 677-81.

   Review of recharge methods, rates of recharge, water quality, relative costs of wells and basins. Discussion of well recharge; selection of recharge site.

ClibPDF - www.fastio.com

7. Muckel, D. C., Replenishment of Ground Water Supplies by Artificial Means," U. S. Department of Agriculture Technical Bulletin, No. 1195, 1951, 51 p.

Describes recharge site selection and methods of recharge. Includes a discussion of surface soil types and permeabilities, and a detailed description of infiltration measurement tests. Report on San Joaquin Valley experiments in which the effects of various physical and chemical treatments on long and short-term infiltration rates were determined.

8. Richter, R. C., Chun, R.Y.D., "Artificial Recharge of Ground Water Reservoirs in California," Journal of the Irrigation and Drainage Division, Proceedings of the American Society of Civil Engineers, Vol. 85, No. IR4, Dec. 1959, paper no. 2281, pp 1 - 28.

Extent of artificial recharge activities and major types of projects in California; infiltration rates for various soil types and factors affecting them, physical and chemical treatments and maintenance practices for recharge facilities.

9. Roll, J. R., Page, L. M., Wright, L. E., "Ground Water Recharge in Santa Clara Valley, California," Proceedings of the California Department of Water Resources Biennial Conference on Ground Water Recharge and Ground Water Basin Management, 1963, 12 p.

As part of its ground water recharge project. S. C. Valley Water Conservation District tested several chemical flocculants for effectiveness in settling out suspended material in recharge waters. It was found that one product, Nalco 600, was effective in removing 85% of suspended solids at a cost of $2.54 per acre-ft of water treated.

10. Schiff, L., Dyer, K. L., "Some Physical and Chemical Considerations in Artificial Ground Water Recharge," Proceedings of the California Department of Water Resources Biennial Conference on Ground Water Recharge and Ground Water Basin Management, 1963, 12 p.

Topics discussed are: infiltration rates of different rocks and soils, causes of soil clogging and how it affects water infiltration, means of preventing clogging, relationship between various soil types and infiltration rates, soil water movements and soil characteristics.

11. Schiff, L., "Effect of Filtering on Model Recharge Wells," Journal of the Irrigation and Drainage Division, Proceedings of the American Society of Civil Engineers, Vol. 87, No IR4, Dec. 1961, pt. 1, paper 3015, pp. 55-63.

Results of experiments involving model recharge wells and sand filters; water rose four times higher in wells receiving unfiltered water than in those receiving filtered water, due to silt clogging. Sand filters perform best when water flows over them; recharge shafts or shallow wells with overlying filters can be placed strategically in waterways for maximum efficiency.

ClibPDF - www.fastio.com

12. Schmid, W. E., "Field Determination of Permeability by the Infiltration Test," Permeability and Capillarity of Soils, American Society for Testing Materials, Special Technical Publication 417, 1967, pp. 142-159.

A description of permeability determination test procedures. Formulas are derived for infiltration wells terminating above and below the water table; falling and constant head, cased and uncased well tests. Experiments show that permeability coefficients may be determined by in situ infiltration tests.

13. Suter, M., "High-Rate Recharge of Ground Water by Infiltration," Journal of the American Water Works Association, Vol. 48, No. 4, April, 1956, pp. 355-360.

Design and construction of a Peoria, Ill., recharge pit is described. Discusses filtration techniques used to remove silt; a pea gravel basin lining tripled infiltration rates. Report on results from four operating seasons.

14. Todd, D. K., Ground Water Hydrology, John Wiley & Sons, Inc., New York, 1959, pp. 79-146, pp. 251-274.

Text covers hydrology of wells, including recharge wells; drawdown equations are presented in detail. Discusses well construction and maintenance, and performance of recharge installations, including basins.

15. Watson, K. K., Note on the Field Use of Theoretically Derived Infiltration Equation," Journal of Geophysical Research, Vol. 64, No. 10, Oct. 1959, pp. 1611-1615.

An infiltration equation is developed theoretically and then tested against field infiltration curves obtained from sprinkling infiltrometer measurements. The equation appears to express these field curves more accurately than do existing empirical equations, particularly during early infiltration periods.

16. Wilson, L. G., "Sediment Removal from Flood Water by Grass Filtration," Transactions of the American Society of Agricultural Engineers, Vol. 10, No. 1, 1967, pp. 35-57.

Study of effectiveness of grass filters for sediment removal. Factors involved in successful use of this method for clarifying water in artificial recharge operations. Many grasses were tested, but Bermuda grass was found to be superior in filtration efficiency and durability.

17. Valliant, J. C., "Artificial Recharge of Surface Water to the Ogallala Formation in the High Plains of Texas," Proceedings of the California Department of Water Resources Biennial Conference on Ground Water Recharge and Ground Water Basin Management, 1963, 10 p.

Possibilities for using heavily silted lake water in aquifer recharge were examined. It was determined that extremely turbid water could be injected through a well when surging and pumping techniques were applied. Several types of well filters were also tested, and three different designs showed good potential.

ClibPDF - www.fastio.com

18. "Design and Operation of Recharge Basins," Journal of the American Water Works Association, Vol. 55, No. 6, June 1963, pp. 697-704, Report by Task Group 2440R.

Infiltration rates in recharge basins depend on: basin design, quality of available water, use of special filtering materials at soil-water interface and soil characteristics. Discussion of advantages and purposes of recharge basins, recharge water. Basin design details include shape, size and capacity, and special treatments.

19. Ground Water and Wells, Edward E. Johnson, Inc., St. Paul, Minn., 1966, 440 pgs.

Describes natural filtration of ground water moving through soil, well hydrology and geological considerations, special construction techniques and chemical treatments.

ClibPDF - www.fastio.com

ClibPDF - www.fastio.com