0233

STATE OF CALIFORNIA
HIGHWAY TRANSPORTATION AGENCY
DEPARTMENT OF PUBLIC WORKS
DIVISION OF HIGHWAYS

A PRELIMINARY EVALUATION OF WRONG-WAY BARRIERS AND RECOMMENDATIONS FOR FURTHER STUDY

LIBRARY COPY
Transportation Laboratory

SEPTEMBER 1966

66-39
DND

ClibPDF - www.fastio.com

ClibPDF - www.fastio.com

State of California
Highway Transportation Agency
Department of Public Works
Division of Highways
Materials and Research Department

September 1966

Laboratory Project
Auth. W. O. 36387

Mr. J. E. Wilson
Traffic Engineer
Traffic Department
Sacramento, California

Dear Sir:

Submitted for your consideration is:

A PRELIMINARY EVALUATION

OF

WRONG-WAY BARRIERS

AND

RECOMMENDATIONS FOR FURTHER STUDY

Study made by . . . . . Structural Materials Section
Under general direction of . . . . . E. F. Nordlin
Work supervised by . . . . . J. R. Stoker
R. N. Field
Report prepared by . . . . . J. C. Eagan

Very truly yours,

JOHN L. BEATON
Materials and Research Engineer

EFN/RNF/JCE:mw
cc: LRGillis
ACEstep
NEAndersen

ClibPDF - www.fastio.com

ClibPDF - www.fastio.com

TABLE OF CONTENTS

		Page
I.	INTRODUCTION	1
II.	OBJECTIVES	2
III.	PARAMETER WARRANTS	3
IV.	CONCLUSIONS	4
V.	DEVICE CLASSIFICATIONS	5
VI.	DESIGN CONSIDERATIONS	6
VII.	DEVICE DESCRIPTIONS	7
VIII.	DISCUSSION	11
IX.	REFERENCES	13

ClibPDF - www.fastio.com

ClibPDF - www.fastio.com

I. INTRODUCTION

In a letter dated March 9, 1965, J. E. Wilson to L. R. Gillis, the Traffic Department requested that the Materials and Research Department undertake a study to develop a physical barrier to prevent wrong-way movements on freeway off ramps. As the initial step in this project, numerous ideas for barrier or deterrent devices, proposed by the public, by engineers in this department, and by engineers in other Division of Highways departments, were given careful study. It was found that the most promising of these ideas fell into six major classifications or types. This preliminary report discusses and evaluates the various types of devices that have been proposed and concludes that the following electro-mechanical types appear to merit further study and development effort, namely: (1) the false curb, (2) the gate, and (3) the tire puncturing device.

It is requested that the Traffic Department review the results of this preliminary study and give their recommendations relative to further study by the Materials and Research Department. It is the opinion of the Materials and Research Department that detailed preliminary designs should be worked up for one or more of the forementioned most promising basic types of devices with the intent that at least one device would be constructed and subjected to full scale tests.

ClibPDF - www.fastio.com

ClibPDF - www.fastio.com

II. OBJECTIVES

The objectives of this report are:

1. To develop parameter warrants for the evaluation of devices which have been proposed for use as wrong-way driving barriers or deterrents.

2. To classify and evaluate the aforesaid devices so that the most promising can be identified and considered for detail design, prototype fabrication, and possible full scale testing.

ClibPDF - www.fastio.com

ClibPDF - www.fastio.com

III. PARAMETER WARRANTS

A. The device should be reasonably inexpensive to fabricate or purchase, install, and maintain.

B. The device should be as reliable as possible, that is, it should very seldom fail to operate correctly when violated by a wrong-way vehicle.

C. The device should not present, or appear to present, a hazard to right-way traffic, including motorcycles or other small vehicles.

These warrants represent the general consensus of opinion as expressed in a number of official conferences and communications between the Traffic Department and the Materials and Research Department. These warrants are considered reasonable and valid. Warrant A, concerning installation and maintenance costs, is relative and therefore is more flexible than warrants B and C which relate to reliability and safety.

ClibPDF - www.fastio.com

ClibPDF - www.fastio.com

IV. CONCLUSIONS

After study of the various types or classes of wrong-way barriers or deterrents described in the succeeding pages, the following conclusions have been reached:

A. The following classes of devices violate warrant C (present or appear to present a hazard to right-way traffic) and should be eliminated from serious consideration as a wrong-way barrier or deterrent:

   1. False Curb (mechanical).

   2. Rumble Strip (mechanical).

   3. Tire Puncturing (mechanical).

B. The classification, Collapsing Plates (mechanical), has no warrant violations; however, design feasibility should be established by a mechanical engineer before further study on this device proceeds.

C. Although they have not been eliminated from consideration, the following devices should be held in abeyance at this time:

   1. Rumble Strip (electro-mechanical).

   2. Collapsing Plates (electro-mechanical).

   3. Arresting Gear (electro-mechanical).

D. Detailed preliminary designs should be drafted from the following device classifications which appear to be the most promising:

   1. False Curb (electro-mechanical).

   2. Gate (electro-mechanical).

   3. Tire Puncturing (electro-mechanical).

E. From the detailed preliminary designs to be developed in B and D above, one or more of the resultant devices should be chosen for prototype fabrication and test installation.

ClibPDF - www.fastio.com

ClibPDF - www.fastio.com

V. DEVICE CLASSIFICATIONS

The most promising of the proposed devices fall into six groups and are classed as either mechanical or electro-mechanical. Electro-mechanical devices are those requiring a vehicle direction detection system and power for operation, while the mechanical devices would require only a spring, counterbalance or similar system for operation. The device classifications are:

A. False Curb (see Exhibits 1-A, 1-B) mechanical and electro-mechanical.

B. Rumble Strip (see Exhibits 2-A, 2-B) mechanical and electro-mechanical.

C. Gate (see Exhibits 3-A, 3-B) electro-mechanical.

D. Tire Puncturing (see Exhibits 4-A, 4-B, 4-C) mechanical and electro-mechanical.

E. Collapsing Plate (see Exhibit 5) mechanical and electro-mechanical.

F. Arresting Gear (see Exhibits 6-A, 6-B) electro-mechanical.

ClibPDF - www.fastio.com

ClibPDF - www.fastio.com

VI. DESIGN CONSIDERATIONS

Some of the more important factors to be considered in the design and installation of all wrong-way devices are:

1. Will right-way drivers be reluctant or hesitant about driving over or past the device?

2. Will the device be satisfactory for motorcycles and other small vehicles?

3. What features should be considered to guard against jamming, either deliberate or from random debris?

4. How wide, in relation to lane width, should the device be?

5. Reliability of vehicle direction detection systems where necessary.

6. If an electro-mechanical device, should it be detected and cleared by a right-way movement or should it be detected and positioned to stop a wrong-way movement?

7. Will a trapped wrong-way vehicle or its barrier device create an unsafe hazard for the right-way vehicle?

8. If an electro-mechanical device is activated by the wrong-way vehicle, how will it be cleared after deterring or trapping a wrong-way vehicle?

Additional design factors, peculiar to the device under discussion, are listed in Section VII. DEVICE DESCRIPTIONS.

ClibPDF - www.fastio.com

ClibPDF - www.fastio.com

VII. DEVICE DESCRIPTIONS

A. FALSE CURB (Mechanical and electro-mechanical)

In general, this device would be a hinge mounted steel plate installed, with associated hardware, in a suitable trench cut in the roadway (see Exhibits 1-A and 1-B). If mechanical, it would normally be held in the up position by springs, counter-weights, hydraulic or pneumatic cylinders, or a combination of these devices. Right-way vehicles would depress or tip over this device without opposition or endangering effects.

If electro-mechanical, it would normally be held in the down position until activated or raised into barrier position by the detection of a wrong-way vehicle. The actuating mechanism would be a hydraulic, pneumatic, electrical or combination system activated by a vehicle presence and direction detection system.

Important factors to be considered in the design and installation of this device are:

1. Should it be of segmented or one piece design?

2. What should its longitudinal or ramp length be?

3. What should its maximum rise above the pavement surface be?

4. Should the leading (facing wrong-way) edge be rounded, squared, serrated?

5. Would light cars and motorcycles have sufficient weight to safely depress a mechanical device?

B. RUMBLE STRIP (Mechanical and electro-mechanical)

The mechanical devices in this classification would include wedges, buttons, and other configurations cemented to the pavement surface; and indentations, variously configurated, moulded into and part of the pavement surface, such as step-like risers (see Exhibit 2-A and 2-B). These would be designed to give a loud rumble and induce a rough ride when traversed in the wrong-way direction.

The electro-mechanical versions of rumble devices could, in general, follow the configurations given for the inert devices. They would differ in that the rumble strips would be formed, or raised into position, by a hydraulic, pneumatic, electrical or combination system activated by a detector system.

ClibPDF - www.fastio.com

ClibPDF - www.fastio.com

VII. DEVICE DESCRIPTIONS

A. FALSE CURB (Mechanical and electro-mechanical)

In general, this device would be a hinge mounted steel plate installed, with associated hardware, in a suitable trench cut in the roadway (see Exhibits 1-A and 1-B). If mechanical, it would normally be held in the up position by springs, counter-weights, hydraulic or pneumatic cylinders, or a combination of these devices. Right-way vehicles would depress or tip over this device without opposition or endangering effects.

If electro-mechanical, it would normally be held in the down position until activated or raised into barrier position by the detection of a wrong-way vehicle. The actuating mechanism would be a hydraulic, pneumatic, electrical or combination system activated by a vehicle presence and direction detection system.

Important factors to be considered in the design and installation of this device are:

1. Should it be of segmented or one piece design?

2. What should its longitudinal or ramp length be?

3. What should its maximum rise above the pavement surface be?

4. Should the leading (facing wrong-way) edge be rounded, squared, serrated?

5. Would light cars and motorcycles have sufficient weight to safely depress a mechanical device?

B. RUMBLE STRIP (Mechanical and electro-mechanical)

The mechanical devices in this classification would include wedges, buttons, and other configurations cemented to the pavement surface; and indentations, variously configurated, moulded into and part of the pavement surface, such as step-like risers (see Exhibit 2-A and 2-B). These would be designed to give a loud rumble and induce a rough ride when traversed in the wrong-way direction.

The electro-mechanical versions of rumble devices could, in general, follow the configurations given for the inert devices. They would differ in that the rumble strips would be formed, or raised into position, by a hydraulic, pneumatic, electrical or combination system activated by a detector system.

ClibPDF - www.fastio.com

ClibPDF - www.fastio.com

One important factor to consider is the fact that a rumble strip device would be only a warning (possibly a slight deterrent) and would not act as a very positive barrier to wrong-way movement.

C. GATE (Electro-mechanical)

The gates that have been proposed can be grouped into two basic types: (1) supported from one side of the roadway, such as a railroad crossing type (see Exhibit 3-A) and (2) supported from both sides of the roadway, such as a drop-down garage door (see Exhibit 3-B). Both types would require activation by a detector system plus a hydraulic, pneumatic, electrical or combination system to power the gate. They would remain in the up position until activated by a wrong-way movement.

Important factors to be considered in the design and installation of this device are:

1. Shall the gate be supported from one or both sides of the roadway?

2. What material and/or configuration should form the gate proper? Flexible or rigid?

3. Should the gate be detected and raised by right-way movement or detected and lowered by wrong-way movement?

4. If in the normally down position, will the gate respond fast enough to clear faster than average right-way traffic?

D. TIRE PUNCTURING (Mechanical and electro-mechanical)

The effectiveness of the "spiked barrier" as a wrong-way vehicle disabling device has been tested under controlled conditions and reported on in January 1965(1). This device (see Exhibit 4-A) is manufactured commercially and consists of coiled springs mounted on a steel pipe and set in the pavement so that one end of the spring protrudes approximately 6" at a 45 degree angle opposing wrong-way vehicles. The protruding spikes are approximately 3.5" apart.

Two other mechanical devices appear to have some merit as wrong-way vehicle tire puncturing devices; they are:

1. A number of closely spaced pieces of flat metal of adequate quality, drilled off-center, sharpened, appropriately spaced and mounted on a shaft, and the assembly installed in a suitable trench cut in the roadway surface (see Exhibit 4-B).

2. A single plate or plate segments with serrated, sharp edge protruding at a 45 degree angle opposing wrong-way vehicles or possibly incorporated as the edge of the top plate of a false curb barrier.

ClibPDF - www.fastio.com

ClibPDF - www.fastio.com

All of these devices if mechanical would normally rest in the up position, opposing wrong-way traffic. Right-way traffic would depress them without endangering effect.

The electro-mechanical version of these devices would use a vehicle direction detector actuated hydraulic, pneumatic, electrical or combination system for operation. In this case the tire puncturing barrier would normally be in the down position (flush with pavement surface) and actuated to the up position by wrong-way vehicles.

Additional important factors to be considered in the design and installation of this device are:

1. If segmented, like the spiked barrier, what should the spacing between cutting edges or plates be?

2. How long should the spikes or plates be; and at what angle, incident to the roadway surface, should they rest when in an up position?

3. Will the spikes or plates, when damaged, be a hazard to right-way traffic?

4. If mechanical, will the right-way driver be able to determine the orientation of the spikes or will he be fearful that they are pointing in his direction?

E. COLLAPSING PLATE (Mechnical and electro-mechanical)

This device would consist of two interlocking steel plates connected to an appropriate collapsing or actuating mechanism. When violated by a wrong-way vehicle, the plates would collapse and form a depression in the roadway surface, imparting a bump to the wrong-way vehicle (see Exhibit 5). The mechanical version would be returned to its normal position by spring, hydraulic or pneumatic power.

The electro-mechanical version would use a detector actuated hydraulic, pneumatic, electrical or combination system to collapse the plates and form a depression.

F. ARRESTING GEAR (Electro-mechanical)

Devices in this classification would include hooks and/or lane width nets supported at each side of the roadway (see Exhibits 6-A and 6-B). The hook or hooks would "snag" onto the vehicle's bumper, axle, etc. The net would act as a barrier to the vehicle. Each device would be attached to an arresting motor by cable and wrong-way vehicles would be restrained in the manner of an aircraft landing on a carrier. Both devices would be installed in appropriate trenches cut in the roadway and

ClibPDF - www.fastio.com

ClibPDF - www.fastio.com

placed into operation by a vehicle direction detector actuated hydraulic, pneumatic, electrical or combination system.

After a wrong-way movement, an arresting gear type device would have to be cleared or depressed by a push button activated power mechanism.

ClibPDF - www.fastio.com

ClibPDF - www.fastio.com

VIII. DISCUSSION

A. FALSE CURB (Mechanical)

This device, unless of a very low rise design, would violate warrant C (present or appear to present a hazard to right-way traffic) as:

1. The right-way driver would notice the transition from the normal pavement surface to the ramp of the curb and might be reluctant to drive over.

2. The inertia of the device, even if delicately balanced, would cause a severe bump to be imparted to the right-way vehicle if it were traveling at any speed other than very slow. This ramp effect would be even more severe to a motorcycle or other small vehicle.

There is serious doubt as to the wrong-way "deterrent" value of a "False Curb" when constructed so as not to violate warrant C.

B. RUMBLE STRIP (Mechanical)

Devices in this classification would also violate warrant C. The right-way driver could see, hear, and also feel the effects of the device and therefore be reluctant or hesitant about driving over unless a pattern could be developed to rumble or cause rough riding in the wrong-way direction only.

C. TIRE PUNCTURING (Mechanical)

Information reported in "Full Scale Dynamic Tests on One Way Spiked Barrier"(3) indicates that this device would also violate warrant C as:

1. Right-way drivers would be hesitant about driving over the device as it is difficult, if not impossible, to tell in which direction the spikes are oriented.

2. In order to deflate the tire quickly and keep the wrong-way car from entering, the tire must be ripped, not just punctured, possibly causing a blowout with subsequent violent reactions.

3. Violation of the device could, in some cases, cause the tire ripping prong to be bent and thus oppose the right-way traffic.

In general, the aforesaid information, excepting Item 3 (a design variable), would also be applicable to tire puncturing devices having a different configuration, such as blades or serrated edges.

ClibPDF - www.fastio.com

ClibPDF - www.fastio.com

D. COLLAPSING PLATE (Mechanical)

Although the "alerting" value of merely imparting a bump to the wrong-way vehicle would have to be determined, devices in this classification would not violate any of the warrants if a mechanically reliable device can be designed.

E. FALSE CURB, RUMBLE STRIP, GATE, COLLAPSING PLATES, TIRE PUNCTURING AND ARRESTING GEAR (Electro-mechanical)

These devices require an appropriate detector-actuated power system to place them into operation which obviously raises the cost of the installation and maintenance considerably over a mechanical device. However, excepting perhaps the relative warrant A, concerning costs, these devices do not violate the recommended warrants if the device is inoperative until activated by a wrong-way vehicle. In effect, this means that until activated:

1. The False Curb, Rumble Strip, Collapsing Plates, and Tire Puncturing devices must be held down.

2. The Gates must be held up.

3. The Arresting Gear devices must be held down.

If the devices were to be operated in reverse to the aforesaid, that is, in position to stop or deter the wrong-way vehicle until activated "out of the way" by a detector-sensed right-way vehicle, they would violate warrants A and C and to a lesser extent B as:

1. The greater number of operations would cause more maintenance and this in turn would make the device less apt to operate when needed for a wrong-way violation (warrants A and B).

2. The right-way driver, seeing the device before or as it moves "out of the way", would be reluctant or hesitant about driving over or through the area (warrant C).

ClibPDF - www.fastio.com

ClibPDF - www.fastio.com

IX. REFERENCES

1. Gay, C. V., "Wrong-Way Driving Incidents on Limited Access Divided Highways", January 1963, California Division of Highways, Traffic Department.

2. Tamburri, T. N. and D. J. Theobald, "Wrong-Way Driving Phase II", February 1965, California Division of Highways, Traffic Department.

3. Doty, R. N. and C. R. Ledbetter, "Full Scale Dynamic Tests on One-Way Spike Barrier", January 1965, California Division of Highways, Materials and Research Department.

ClibPDF - www.fastio.com

ClibPDF - www.fastio.com

EXHIBIT 1

FALSE CURB

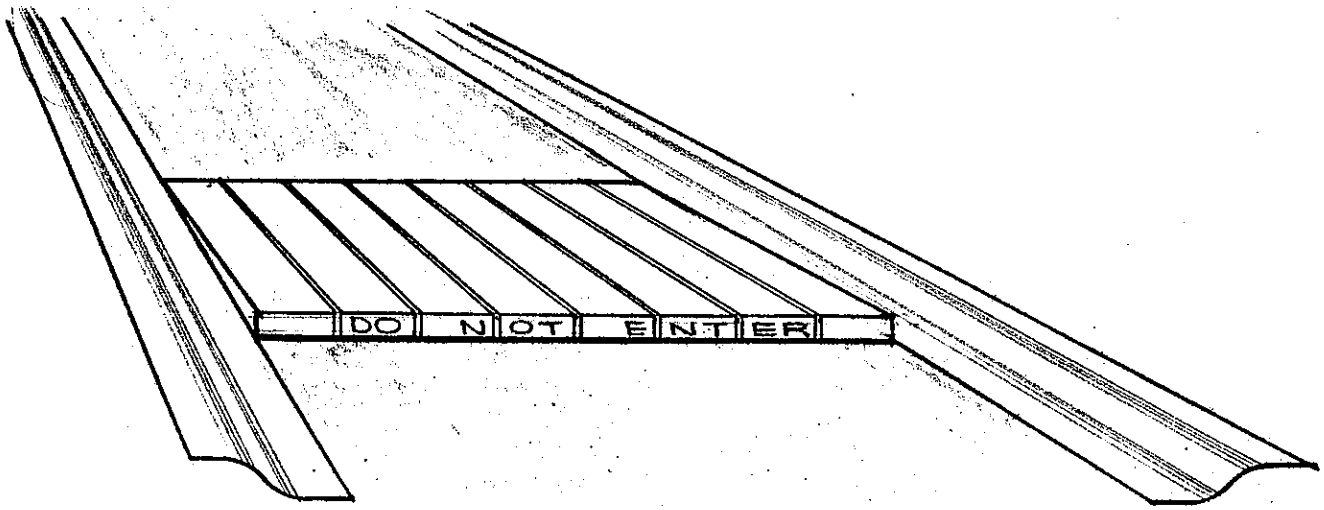

EXHIBIT 1-A

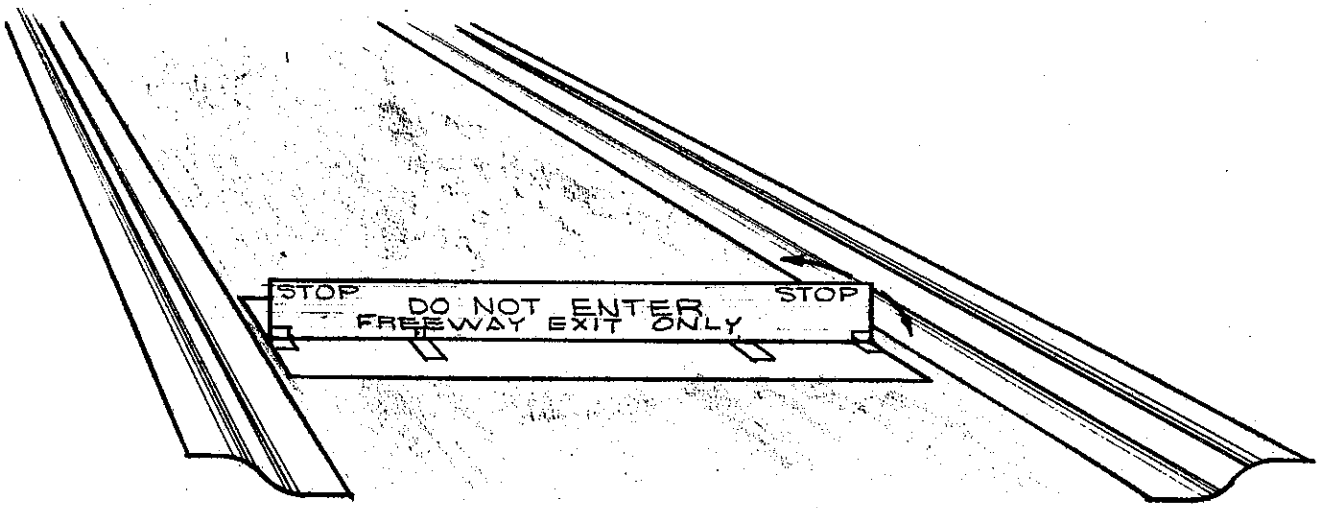

EXHIBIT 1-B

ClibPDF - www.fastio.com

ClibPDF - www.fastio.com

EXHIBIT 2

RUMBLE STRIP

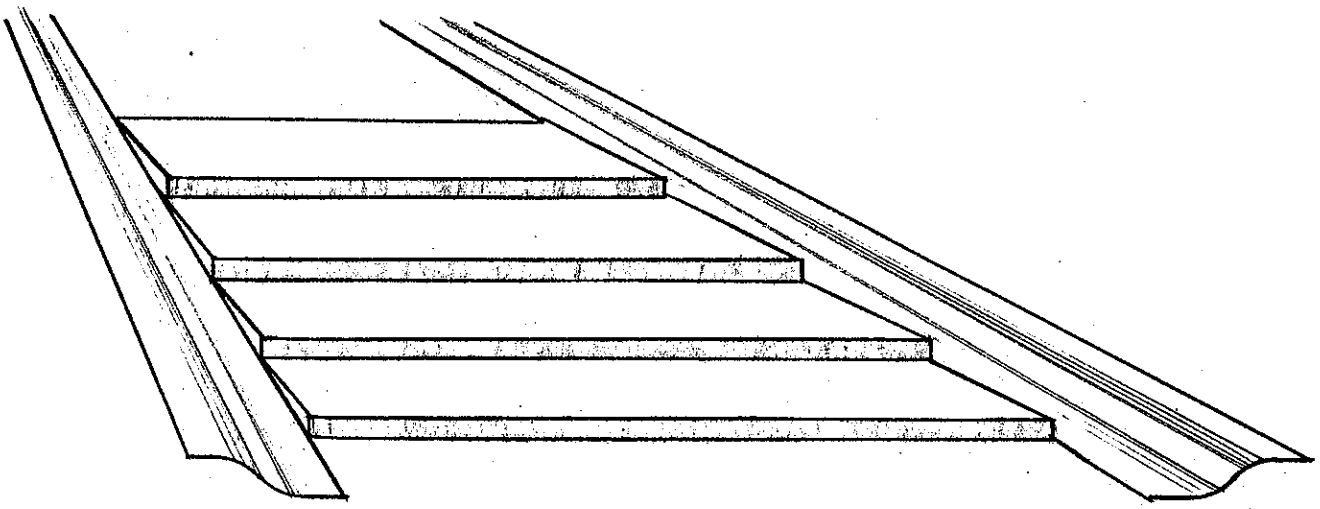

EXHIBIT 2-A

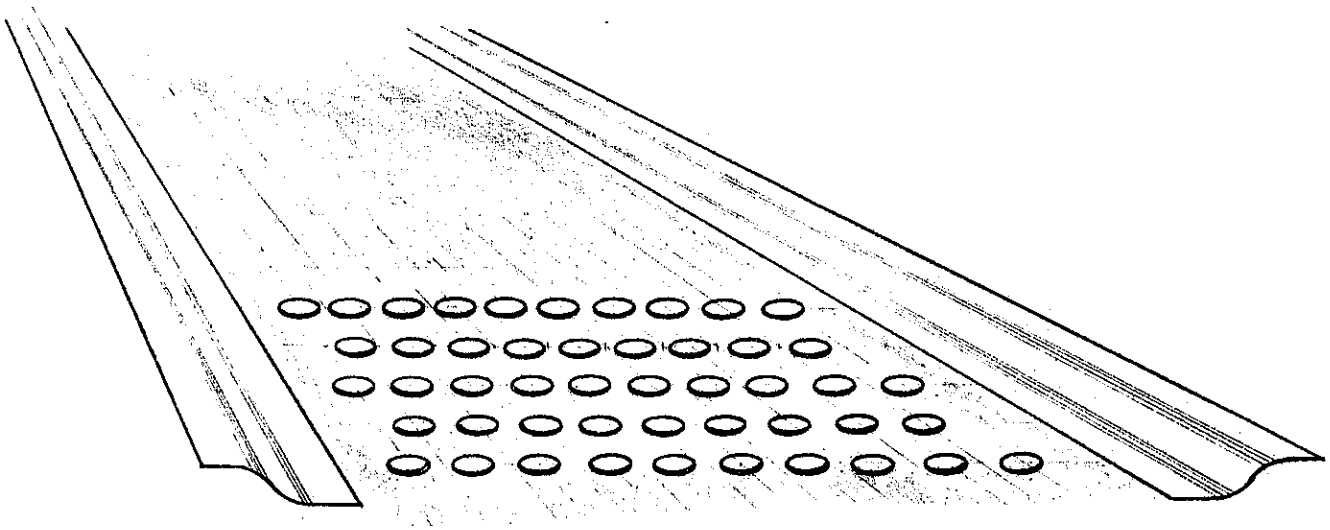

EXHIBIT 2-B

ClibPDF - www.fastio.com

ClibPDF - www.fastio.com

EXHIBIT 3

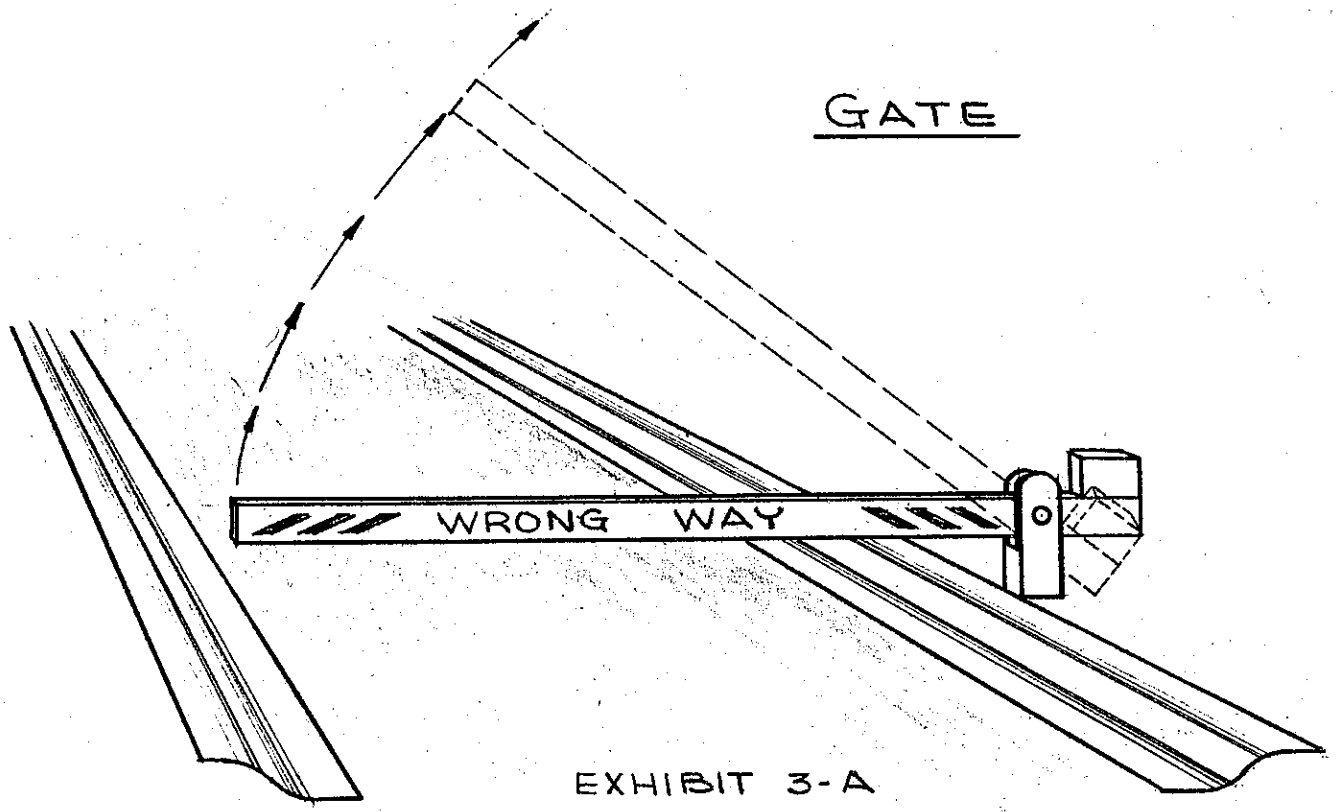

EXHIBIT 3-A

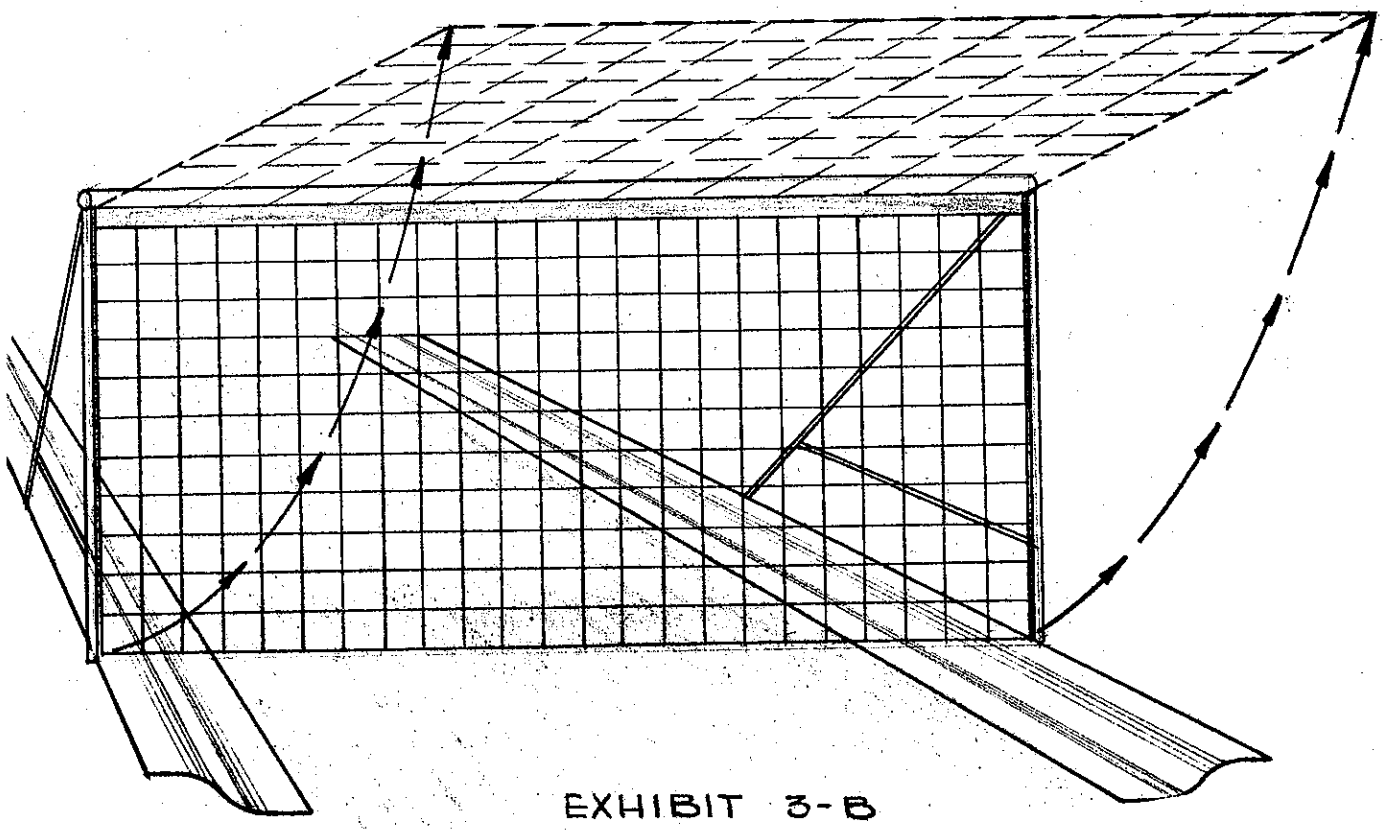

EXHIBIT 3-B

ClibPDF - www.fastio.com

ClibPDF - www.fastio.com

TIRE PUNCTURING

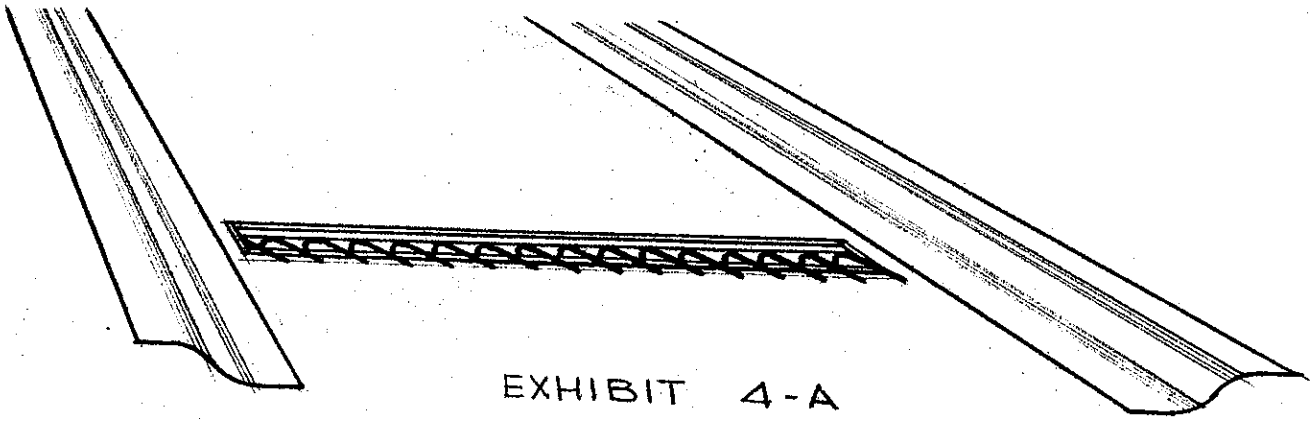

EXHIBIT 4-A

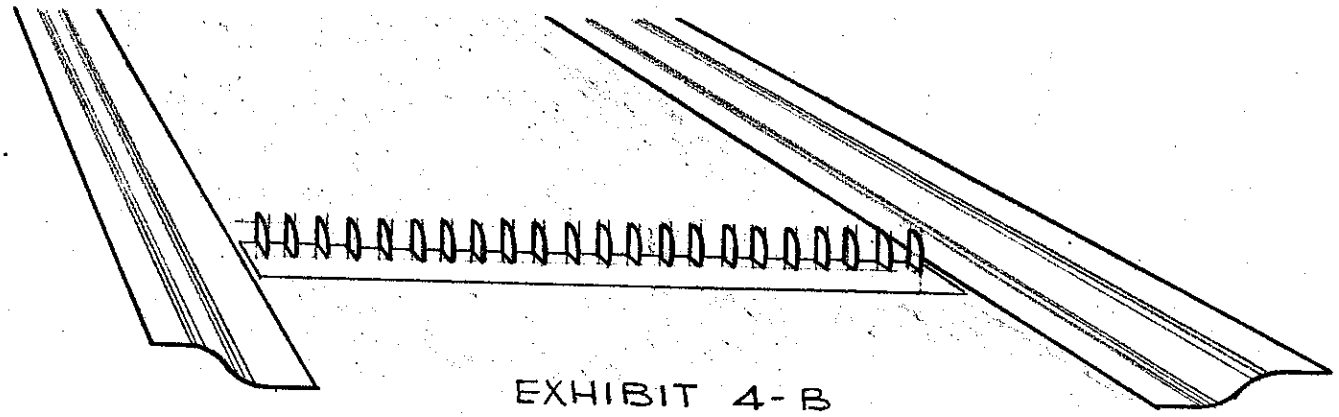

EXHIBIT 4-B

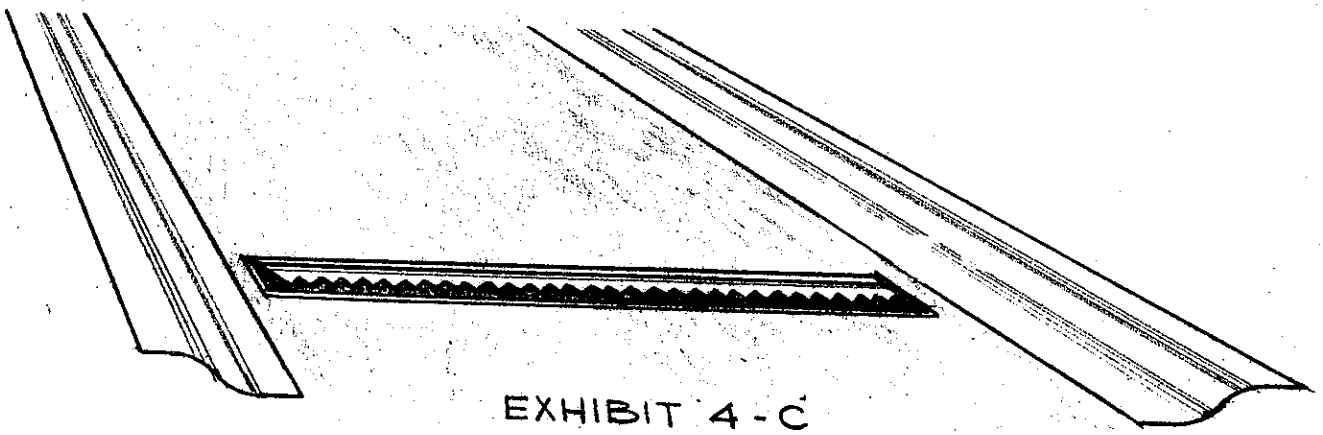

EXHIBIT 4-C

ClibPDF - www.fastio.com

ClibPDF - www.fastio.com

EXHIBIT · 5

COLLAPSING PLATES

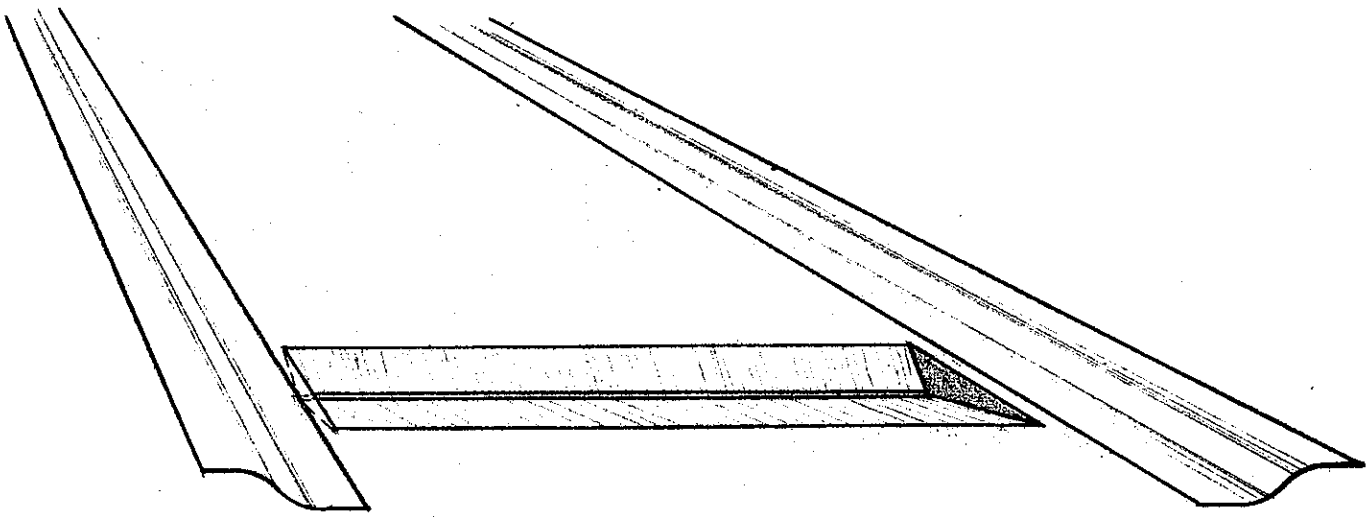

ClibPDF - www.fastio.com

ClibPDF - www.fastio.com

ARRESTING GEAR

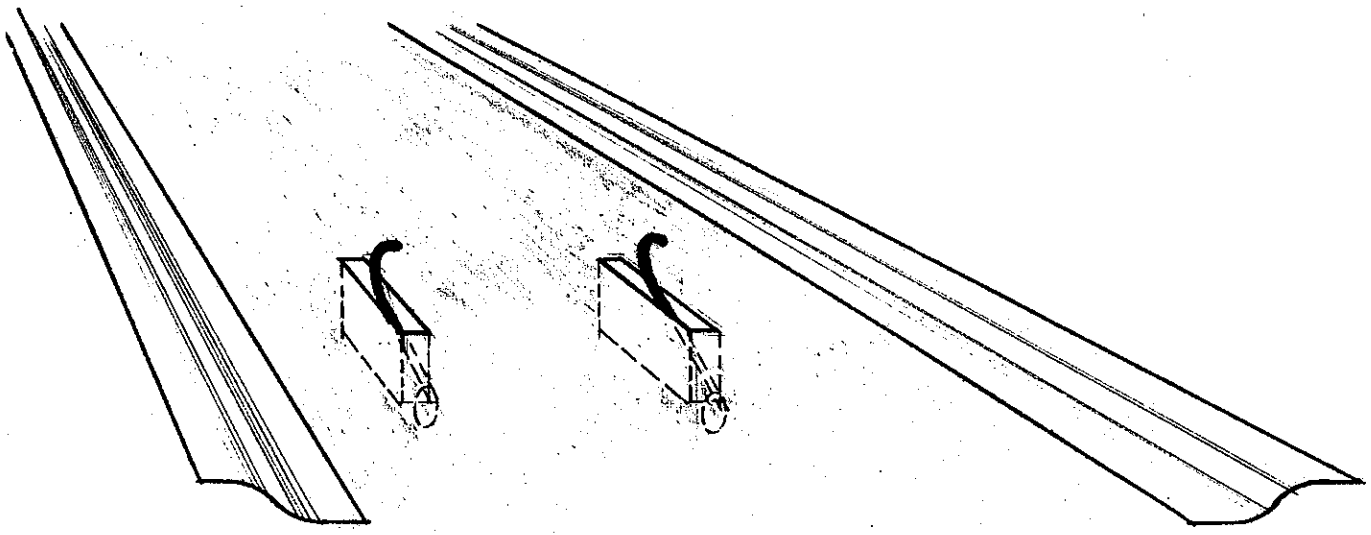

EXHIBIT 6-A

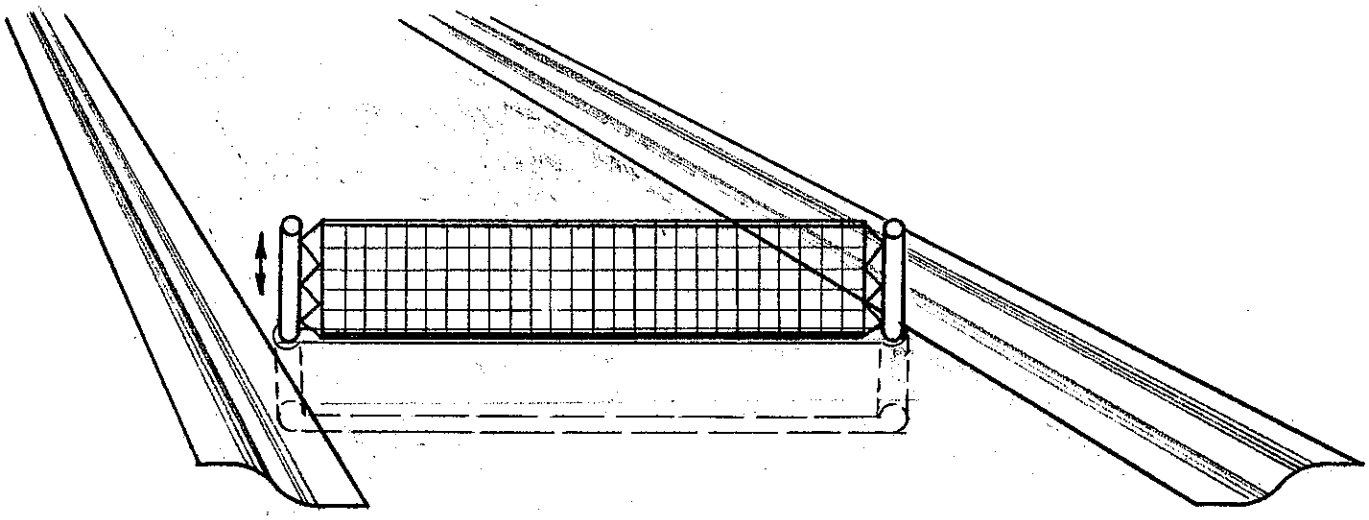

EXHIBIT 6-B

ClibPDF - www.fastio.com

ClibPDF - www.fastio.com