M & R
RES/6/58
3163
copy 2

STATE OF CALIFORNIA
DEPARTMENT OF PUBLIC WORKS
DIVISION OF HIGHWAYS

A REPORT ON THE INVESTIGATION OF THE CORROSION OF THE UNDERGROUND GAS AND WATER SYSTEM AT THE DEUEL VOCATIONAL INSTITUTION

June 1958

58-16

ClibPDF - www.fastio.com

ClibPDF - www.fastio.com

State of California
Department of Public Works
Division of Highways
Materials and Research Department

June 30, 1958

72 - S - 6141

Mr. Allen Cook, Superintendent
Department of Corrections
Deuel Vocational Institution
Tracy, California

Attention: Mr. A. M. Todd, Business Manager

Dear Sir:

Submitted for your consideration is:

A REPORT ON

THE INVESTIGATION OF THE CORROSION

OF THE UNDERGROUND GAS AND WATER SYSTEM

AT THE DEUEL VOCATIONAL INSTITUTION

Study made by . . . . . Structural Materials Section
Under general direction of . . . . . J. L. Beaton
Under general supervision of . . . . . L. S. Hannibal
Work supervised by . . . . . R. F. Stratfull
Report prepared by . . . . . R. F. Stratfull

Very truly yours,

F. N. Hveem
Materials and Research Engineer

RFS:mw
cc: JWTrask
CAHenderlong
Dept. of Corrections (8)

ClibPDF - www.fastio.com

ClibPDF - www.fastio.com

TABLE OF CONTENTS

		Page
I.	INTRODUCTION	1
II.	SUMMARY AND CONCLUSIONS	2
III.	RECOMMENDATIONS	3
IV.	TESTS	5
	A. Pipe to Soil Measurements	
	B. Electrical Resistivity of the Soil	
	C. Miscellaneous Tests	
	1. Galvanic Current Flow	
	2. Cathodic Protection Requirements	
V.	LEAK FREQUENCY	7
VI.	CAUSE OF CORROSION	8
VII.	DISCUSSION	9
	A. Electrical Interconnection of Underground Structures	
	B. Coated Line	
	C. Soil Corrosivity	
	D. Cathodic Protection	
VIII.	APPENDIX	13
	A. Tentative Specifications	
	B. Cathodic Protection Cost Estimate	
	C. Economic Analysis of Cathodic Protection	
	D. Exhibits I through VII.	

ClibPDF - www.fastio.com

ClibPDF - www.fastio.com

I. INTRODUCTION

On March 11, 1958, Mr. Allen Cook, Superintendent, requested by letter that the Materials and Research Department perform a corrosion survey at the Deuel Vocational Institution under Laboratory Authorization 72-S-6141. It was also requested that the results of the investigation include an appraisal of the cause of the corrosion as well as recommendations for alleviation of the problem.

Historically, the underground piping was installed in 1951 and began leaking by 1956. In 1956 two leaks were repaired; in 1957 there were two leaks repaired; and in the first two months of 1958 four leaks were repaired, making eight in all.

Some time in March 1958 approximately 5,000 lineal feet of gas line serving the farm area was abandoned due to the corrosion of the pipe which resulted in an appreciable loss of gas. When this gas line was removed, the aggressive nature of the corrosion attack became evident as one or more complete perforations of the pipe wall were observed in each length of pipe.

It has also been reported that there has been destruction of underground telephone cables as well as perforation of the water pipes.

ClibPDF - www.fastio.com

ClibPDF - www.fastio.com

II. SUMMARY AND CONCLUSIONS

The gas lines are corroding as a result of their interconnection with (a) the reinforcing steel in the concrete wall of the utility tunnel, (b) the copper grounding rods, (c) the cast iron water system, and (d) the bare copper neutral wire within the cable ducts. These latter are all cathodic to the gas line, with the highest galvanic corrosion potentials being developed by the metals embedded in the alkaline concrete matrix. The interconnection of dissimilar metals is causing accelerated corrosion; however, the soil itself is sufficiently mineralized to cause a rapid corrosion rate.

The soil at the institution site is expansive in character. It deforms with variations in moisture content, damaging the pipe coating by its movement. As a result, galvanic corrosion currents concentrate at new breaks or perforations in the pipe coating. The concentration of these galvanic currents at the small areas exposed by these coating breaks tends to accelerate the normal rate of corrosion.

The plot of the recorded leaks at the institution indicates that if corrective measures are not taken, the average number of yearly leaks will approximately sextuple with each succeeding year. For instance, there may be an expected total of 5 leaks during 1957, 31 leaks during 1958, and 186 leaks during 1959.

From the leak frequency curve and the maintenance policy of the instutition, it appears that a leaking line will be abandoned within two years after the first recorded leak. A two year respite between initial failure and replacement is sufficient to indicate that corrective measures are in order.

It is not economically feasible to electrically insulate or to isolate the existing galvanic couples which are accelerating the corrosion problem.

It is also evident that even if the galvanic couples of dissimilar metals were removed, the corrosion of the already badly corroded lines would continue at an accelerated rate because of the corrosive soil.

The most effective and practical method of alleviating this corrosion problem is by means of applied current cathodic protection. Since such is economical, it is recommended that cathodic protection be installed to retard or prevent further corrosion of the underground structures. Because of the great mass of piping at the institution, five cathodic protection stations are considered necessary for corrosion control.

It is estimated that if cathodic protection is installed, it should be possible to effect a yearly savings of some $14,000.

ClibPDF - www.fastio.com

ClibPDF - www.fastio.com

III. RECOMMENDATIONS

We recommend:

1. That five (5) impressed current cathodic protective stations installed for corrosion alleviation be installed by a competent contractor.

2. That the plans and contract proposal, as well as the contract award, be handled by Division of Architecture.

3. That a representative of the Materials and Research Department be designated "Official Observer" and technical advisor for the cathodic protection installation.

4. That the cathodic protection anode beds be installed at the locations indicated on Exhibits III and IV, Equi-Resistivity Contour Maps.

5. That the cathodic protection rectifiers be installed in locations protected from tampering by unauthorized personnel but accessible for convenient adjustment.

6. That the cathodic protection rectifiers be installed within close proximity of the anode beds.

7. That the institution's piping systems be electrically disconnected or isolated from the public utility lines which serve the institution.

8. That if any buried utility lines, such as telephone, gas or water, traverse the general area of the institution, officials of the interested parties be notified of the State's intentions.

9. That proper tests be performed in conjunction with the interested parties to determine if the cathodic protection system at the institution will adversely affect such distribution systems, even if such systems are electrically isolated from the institution.

10. That the piping system be checked for electrical continuity prior to the application of cathodic protection.

11. That all electrical discontinuities of the piping system or other underground metallic structures be electrically bonded to the piping system.

12. That all metallic objects located at an electrical discontinuity be electrically bonded to the system.

13. That any repair, connection, or dissimilar metal connected to the piping by this work be heavily coated with "Pro-Seal" or

ClibPDF - www.fastio.com

ClibPDF - www.fastio.com

some equally effective coating to prevent direct metallic contact to the soil.

14. That pipe to soil measurements be made and recorded at the selected points, shown on Exhibits III and IV, at weekly intervals for the first 6 weeks of operation and monthly thereafter.

15. That the output of voltage and current of the rectifiers be recorded at weekly intervals for the first 6 weeks of operation and monthly thereafter.

16. That the output of the rectifiers be regulated, as required, to maintain the piping system at least 0.85 volts negative to a copper sulfate half-cell.

17. That the piping system not exceed 2.0 volts negative to a copper sulfate half-cell.

18. That any new piping installation be properly surveyed after installation to determine if protective voltages are within those specified.

19. That the Materials and Research Department of the Division of Highways be immediately informed of any changes in rectifier output after the cathodic protection system is installed and accepted by the State.

20. That the Materials and Research Department be immediately informed of any additional leaks in the piping system after the installation of the cathodic protection system.

21. That at the conclusion of 6 weeks of operation of the cathodic protection system an equi-potential survey be made.

22. That at yearly intervals a corrosion survey be made of the piping system to substantiate the effectiveness of such cathodic protection.

23. That if the Materials and Research Department of the Division of Highways does not perform the yearly surveys, the Materials and Research Department receive a copy of such survey reports.

ClibPDF - www.fastio.com

ClibPDF - www.fastio.com

IV. TESTS

A. Pipe to Soil Measurements

The flow of galvanic current from a corroding metallic structure can be detected by measuring the electrical voltage drop in the soil about the structure.

The voltage drop, or the pipe to soil potential, of the underground structure was measured with a standard copper sulfate half-cell and a high impedance voltmeter.

The results of the pipe to soil measurements made at Deuel Vocational Institution are shown on Exhibits I and II, Equipotential Contours.

As indicated by the pipe to soil measurements, there are many locations at which the gas and water lines are now corroding.

The stability and reproducibility of the pipe to soil potential measurements indicated that the corrosion problem is typically galvanic and is not caused by stray electrical currents.

The measurements also indicate that the bare galvanized pipe in the sprinkling system is supplying partial cathodic protection to the non-galvanized pipe. When the zinc coating on the sprinkler system is finally consumed a greater number of leaks will appear in the pipe system as a whole.

B. Electrical Resistivity of the Soil

Since the corrosion of the underground piping is electrochemical in nature, either the presence or the absence of certain chemicals is contributory to the magnitude of the galvanic currents developed. Likewise the electrical resistivity of the soil, through which the electrical corrosion currents must flow, has a direct bearing on the rate of corrosion -- the lower the electrical resistivity of the soil, the greater the possible flow of current. In the final analysis a high current flow is directly related to a high rate of corrosion attack.

The electrical resistivity of the soil at the Deuel Vocational Institution is shown on Exhibits III and IV, Equi-Resistivity Contour Maps. As shown by the earth resistivity measurements, the soil varies from 200 to 2000 ohm cm. The average is approximately 500 ohm cm., which indicates a severely corrosive soil.

C. Miscellaneous Tests

1. Galvanic Current Flow

An ammeter was inserted between the ends of the abandoned, and electrically isolated, gas line which once serviced

ClibPDF - www.fastio.com

ClibPDF - www.fastio.com

the farm area buildings. A continuous current flow of 0.26 amperes was recorded for three days. This current flow is sufficient to corrode or consume approximately 5 pounds of steel each year.

The galvanic coupling of dissimilar metals caused the current. This test coupling reproduced the original situation of the gas line before a portion of it was removed and abandoned. Even if the gas line had been originally installed as an electrically isolated pipe, it would still be perforated because of the severely corrosive soil.

2. Cathodic Protection Requirements

There are nearly 9 lineal miles, or approximately 58,000 square feet of pipe surface shown on the plans. The amount of additional piping contained in the sprinkler and irrigation systems, etc. is not known since it does not appear to be recorded.

By utilizing the portable welding generator owned by the institution, it was determined that approximately 75 amperes were required to cathodically protect the wells. Also, that approximately 3 milliamperes per square foot were required to protect the gas and other lines in the farm area.

Theoretical calculations indicate that a minimum of approximately 250 amperes are required to bring the entire piping system under corrosion control.

Insofar as the tests indicate a large current is required to bring the piping system under control, it has not been possible to establish the exact current requirements of the system. The construction of a temporary ground bed of sufficient dimension to handle the necessary test current was considered to be beyond the economics of this investigation. It is conceivable that 500 amperes would be required to protect all of the bare and uncoated underground piping. Thus the cathodic protection installation should be sufficiently flexible to meet future current requirements. The contingency has been taken into consideration by our recommendation for the purchase of variable current output rectifiers.

ClibPDF - www.fastio.com

ClibPDF - www.fastio.com

V. LEAK FREQUENCY

The frequency of leaks in a utility system follows a definite mathematical function which is indicated by the plot of the accumulated leaks against time shown on Exhibit V in the Appendix.

As a matter of comparison, the plotted leak frequency curves of the Paso Robles School for Boys and the Porterville State Hospital are shown as a comparison of severity. As indicated by the chart, the Deuel Vocational Institution leak record is particularly severe when compared to the other State facilities.

It is not anticipated that the actual accumulated leaks in the piping will follow the leak frequency curve in the future. This assumption appears valid since those sections of pipe on which the corrosion is occurring will be abandoned or replaced for economic reason.

At Paso Robles, when the leak frequency became approximately 21 leaks per year, 160 lineal feet of pipe in the corrosion area were replaced. At Deuel, when the leak frequency approached 20 leaks per year, the gas lines to the farm area were abandoned and emergency butane services installed.

However, the slopes of the leak frequency curves are indicative of the severity of corrosion at the various facilities. They indicate that, once leaks begin to occur in certain areas, the piping will be replaced within two years after the first leak is detected and repaired.

ClibPDF - www.fastio.com

ClibPDF - www.fastio.com

VI. CAUSE OF CORROSION

The fundamental cause of the corrosion as noted previously is galvanic. Galvanic corrosion is the result of dissimilar metals being electrically connected in a similar electrolyte, or similar metals being electrically connected in a dissimilar electrolyte.

At the Deuel Vocational Institution the following corrosion conditions were found:

1. The reinforcing steel in the underground concrete utility tunnel, being cathodic in relation to the water and gas lines, is causing the corrosion of the latter.

2. The cast iron lines are causing the galvanized and coated lines to corrode.

3. The pipe in high resistivity soil is causing the pipe in low resistivity soil to corrode.

4. The electrical bonding of the dissimilar metallic pipes is causing galvanic corrosion.

5. The severely corrosive soil is causing critical "local action" corrosion of the piping.

6. The coated pipe was not placed in a sand blanket. This resulted in the destruction of the coating by the movements of the expansive soil.

ClibPDF - www.fastio.com

ClibPDF - www.fastio.com

VII. DISCUSSION

A. Electrical Interconnection of Underground Structures

Usually if a metallic pipe is buried in the earth, the possibility of the corrosion of the pipe will depend upon the non-homogeneity of the system. Thus when a network of different types of metallic pipes is placed in a corrosive soil and electrically interconnected, conditions that create the corrosion voltage are built into the system. The rate of corrosion will usually be controlled either by the anode to cathode area ratio, depolarization, or the electrical resistance of the ground.

At the Deuel Vocational Institution several different types of metallic pipes are physically and electrically interconnected through common appliances, as well as being deliberately interconnected by means of a common electrical ground wire. Quite possibly, if the underground piping had been insulated electrically at the time of construction, the present advanced rate of corrosion would not exist.

Also, magnesium anodes could have been installed for less than 5 percent of the cost of the piping and approximately 10 years of corrosion-free service could have resulted.

B. Coated Lines

The coating of underground piping is a common corrosion protection practice. Sometimes such coatings may appear to accelerate the corrosion of a pipe. The coating does not increase the total corrosion current, but concentrates it at the locations of minor coating imperfections. Failure then occurs at these points. There will invariably be a minute number of imperfections, or "holidays", which expose the metal to the earth. However, these can be detected at the time of installation by electrical test equipment and should be repaired at that time.

The cost of, and current requirements of, cathodic protection of a coated line is minor because of the small area of the exposed pipe to the soil. Conversely, the cost and current requirements of cathodic protection of a bare pipe is high on account of the large surface area of the pipe exposed to the soil.

In a paper presented before the National Association of Corrosion Engineers on June 20, 1951, the following was outlined as the general practice of the Southern California Gas Company for coating pipelines installed in soils of different resistivities:

ClibPDF - www.fastio.com

ClibPDF - www.fastio.com

1. "Dry and well drained sand or fine gravel with resistivity of 5000 ohm-cm., and above, is classed as good and the pipelines buried in these soils are coated with a single layer coating of filled asphalt or coal tar and Kraft paper wrapper. If rocks are present or the installation is difficult, a mechanical shield is used.

2. "Damp, poorly drained loam silt with resistivities of 5000 to 2300 ohm-cm. is classed as intermediate. A single layer pipe coating of filled asphalt or coal tar and asbestos wrapper is used on the pipelines that are buried in this type of soil. Again if rocks are present or the installation is difficult, a mechanical shield is used.

3. "Wet, poorly drained clay or adobe with resistivities of 2300 ohm-cm. or less is classed as bad, and a heavy duty pipe coating is used. This type of coating consists of (1) Somastic, (2) double layer of filled asbestos wrapper, or (3) double layer of filled asphalt with cellulose membrane and an asbestos wrapper. A mechanical shield is used if rocks are present or the installation is difficult. The coating on lines buried in this type of soil for any length of time shows evidence of severe soil stress."

As will be noted from the coating practices of the Southern California Gas Company, a great deal of study has gone into the application and protection of the pipe coatings.

The soil at the institution site is corrosive in nature, and it readily deforms with changes in moisture content. Evidence of the extreme deformation of the soil is indicated by the almost complete deterioration of coatings on removed pipes.

If the piping at the institution was not coated, the corrosion problem would undoubtedly be greater than at present. However, it would appear prudent to protect the coating from soil stresses. It appears that the most practical method of protecting the coating is to place the pipe upon, and to surround it by, a 3-inch thick blanket of sand.

Also, polyvinyl-chloride and polyethylene tapes appear to be economically justified as pipe coatings.

C. Soil Corrosivity

The most acceptable and significant criterion for anticipating or comparing the corrosivity of soils is measurement of their electrical resistivity. The resistivity of a soil is described

ClibPDF - www.fastio.com

ClibPDF - www.fastio.com

in ohm-cm., which is the electrical resistance, in ohms, of a cube of soil one centimeter cubed.

The August 1931 issue of Western Gas presented the following classification of soil corrosivity as related to the specific electrical resistance of such soils:

Resistivity - ohm cm.	Corrosivity
0 - 400	Severely corrosive
400 - 1200	Moderately corrosive
1200 - 4000	Mildly corrosive
4000 - 10000	Slightly corrosive

Resistivity - ohm cm.	Probable Life of Bare Steel Pipe in Years
0 - 1000	0 - 9
1000 - 2500	9 - 15
2500 - 10000	15 or more

As will be noted, the soil at the Deuel Vocational Institution is classified as a severely corrosive soil and a bare or poorly coated pipe will have a probable life span of nine years or less.

D. Cathodic Protection

The use of cathodic protection, for protecting underground metals is a common engineering practice. Such a method is quite practical, but cathodic protection requires that close attention be directed to the possibility of corroding adjacent piping systems not included in the piping network under consideration. It is therefore necessary that all underground metallic structures at the institution be electrically interconnected.

There is the distinct possibility that a few leaks will appear in the piping soon after the application of cathodic protection. The reason for such leaks is that the pipe may already be so corroded that the corrosion products are acting as a temporary "plug". Movements of the soil or variations in moisture content can loosen the "plug", and the resultant leak will be noticed.

If a leak appears in the piping system near a pipe joint, or other pipe, it is good field practice to electrically bond the pipe sections together as a standard repair procedure.

ClibPDF - www.fastio.com

ClibPDF - www.fastio.com

Also, at the conclusion of the installation of the anodes and before the application of cathodic protection the piping system should be checked for electrical continuity. Any electrical discontinuity of the underground system should be electrically interconnected to prevent the possibility of damage by stray current.

The public utility companies which have service lines in the adjacent area should be notified of the State's intentions so that cooperative tests can be performed to determine if our cathodic system would adversely affect their underground lines.

Insofar as the institution is considering installing the cathodic protection system, Exhibits VI and VII are included. These show typical details of anode installation, cable connections, etc.

The institution also requested that a representative of the Materials and Research Department be present to supervise the installation.

The Materials and Research Department, at the request of the Deuel Vocational Institution, will send a competent representative to supervise the installation. However, it is the opinion of the Materials and Research Department that the cathodic protection system would be installed more quickly and the workmanship would be of the standard of industry if the service of an experienced construction organization were placed under contract.

It is our suggestion that the actual cathodic protection plans and proposal be executed by the Division of Architecture. A representative of the Materials and Research Department would best serve the interest of the State if his services were that of an official observer and technical adviser. In this type of arrangement, the routine construction of the installation would be under the continuous observation of a construction inspector, and any technical details would be referred to the official observer.

ClibPDF - www.fastio.com

ClibPDF - www.fastio.com

VIII. APPENDIX

A. Tentative Specifications

Rectifiers:

Good-All "Add-A-Stack" Model Y18-32 selenium rectifier or equal with four (4) selenium stacks. The output shall be variable from 0 to the maximum voltage in a minimum of 10 equal steps.

The rectifier shall perform satisfactorily at maximum output at an ambient temperature of 130° F. The unit shall have built-in thermal, and input and output overload protection.

A DC ammeter with suitable range switching shall be installed. The scale ranges of such an ammeter will not exceed 140% of the rated output of each selenium stack. A DC voltmeter with suitable range switching shall be installed. The scale ranges of such a voltmeter will not exceed 140% of the rated output reading of each selenium stack.

The entire installation shall be mounted in a vandal-proof enameled steel box of code gauge thickness. The box shall have a locking cover and padlock, and it shall be suitable for wall or bench mounting. The rectifier shall have an audible alarm bell, Edwards #340 or equal, 4" size, which shall be wired to sound when the output of the rectifier fails.

Impressed Current Anodes:

"Durion" 2" x 60" Type D-LO high silicon cast iron anodes, or equal high silicon cast iron anodes.

Anodes shall have a five (5) foot watersealed length of A.W.G. #8 standard copper cable. The coating on the wire shall be Rome CPS OR-1, 600 volt, or Anaconda type CP cathodic protection cable, or equal.

Anode Backfill Materials:

"National" BF-3 backfill consisting of graphite particles and an alkalizer or equal.

Placement of Anodes:

Impressed current anodes shall be placed at the designated locations in the following manner:

ClibPDF - www.fastio.com

ClibPDF - www.fastio.com

1. Auger, or otherwise construct anode holes 10 inches in diameter at a depth of 9 feet below the grade of the original ground.

2. Backfill this hole with National BF-3, or equal, backfill material, to a compacted depth of one foot (8 feet below grade).

3. Place and center anode in hole.

4. Continue to place and compact special backfill material in layers not exceeding one foot until the anode has a minimum of one foot of backfill cover.

5. Use a sand or otherwise non-clay porous material to completely backfill the anode installation. Top soil may be used within 6 inches of original ground level for the purpose of growing lawn, etc.

Wiring:

1. Stranded copper anode lead wire shall be 600 volt, A.W.G. size 4/0 Rome cathodic protection cable, CPS OR-1 600 volt, or Anaconda type CP cathodic protection cable or equal.

2. All splices of the anode lead wires to the main feeder lines shall be made by split bolt connector or the Cadweld process, or equal.

3. All underground wire splices shall be adequately protected from current leakage through the soil by using a Scotch-cast Splicing Kit containing No. 4 resin or equal.

4. The main feeder wire from the rectifier to the anode beds shall be embedded at least two feet below the original ground grade or at a depth which will insure protection of the wire from accidental severance by cultivation or excavation.

5. The main feeder wire from the rectifier to the anode beds shall be encased in metallic conduit from the rectifier to the depth of burial of the wire. The length of the conduit shall be sufficient to protect the feeder wire from tampering or accidental severance.

ClibPDF - www.fastio.com

ClibPDF - www.fastio.com

SUGGESTED CATHODIC PROTECTION MATERIAL SUPPLIERS

Harco Corporation
P. O. Box 7026
16901 Broadway Avenue
Cleveland 28, Ohio

Electrical Facilities, Inc.
4224 Holden Street
Oakland, California

Sabins-Dohrmann Company
522 Catalina Boulevard
San Diego 6, California

Frost Engineers Service Co.
P. O. Box 767
Huntington Park, California

Brance Krachy Company
4411 Navigation Boulevard
Houston, Texas

Cathodic Protection Service
310 Thompson Building
Tulsa, Oklahoma

Pipe Line Anode Corporation
Box 996
Tulsa, Oklahoma

Pipeline Coating & Engineering Company
1566 East Slauson Avenue
Los Angeles 11, California

Vanode Corporation
880 East Colorado Street
Pasadena 1, California

B. CATHODIC PROTECTION COST ESTIMATE

5	Cathodic Protection Rectifiers	$ 3500.00
	Excavation and backfill	1500.00
4500 LF	AWG 4/0 R. R. wire or equal	3400.00
24,000 LB	Lime treated coke breeze	1500.00
96 each	2" x 60" Durion Type D-LO anodes	1100.00
	Installation of anodes	1900.00
	Installation of wiring	300.00
	Miscellaneous wire and connectors	300.00
	Installation of rectifiers	2000.00
	Engineering	2000.00
	Sub-total	$ 17,500.00
	Plus 15% contingencies	2,625.00
	Total	$ 20,125.00
	Say	$ 20,000.00

ClibPDF - www.fastio.com

ClibPDF - www.fastio.com

C. ECONOMIC ANALYSIS OF CATHODIC PROTECTION

Estimated yearly cost of utility piping without cathodic protection:

Pipe replacement	$ 2,600.00
Repairing leaks	3,000.00
Emergency service	1,000.00
Yearly loss of original piping	10,000.00
Total	$ 16,600.00

Estimated yearly cost of cathodic protection:

Installation cost (20 year basis)	$ 1,000.00
Power	1,000.00
Maintenance	300.00
Total	$ 2,300.00

Estimated yearly savings from application of cathodic protection: $ 14,300.00

ClibPDF - www.fastio.com

ClibPDF - www.fastio.com

EXHIBIT V

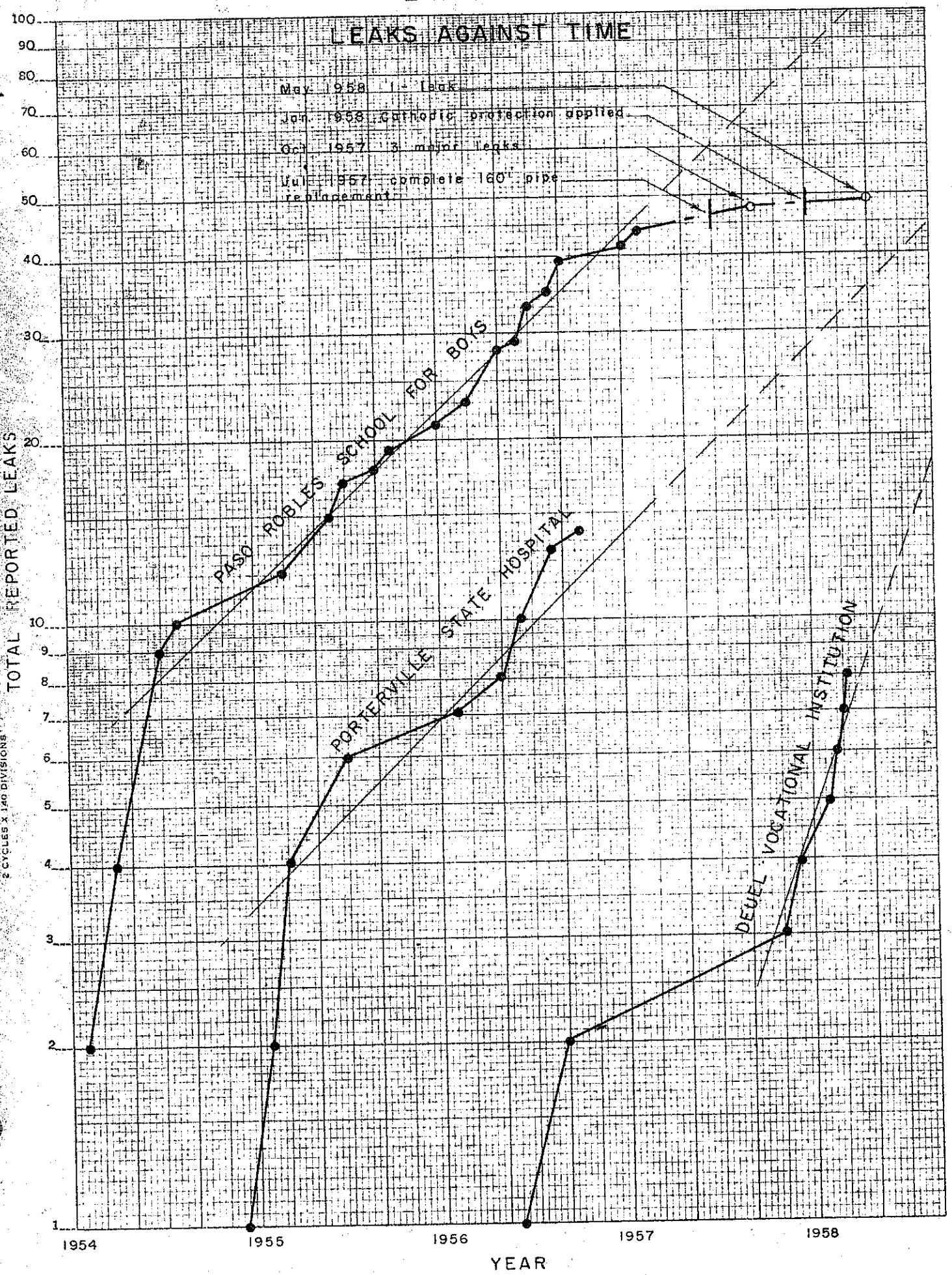

ClibPDF - www.fastio.com

ClibPDF - www.fastio.com

EXHIBIT VI

CATHODIC PROTECTION DETAILS

ANODE DETAIL

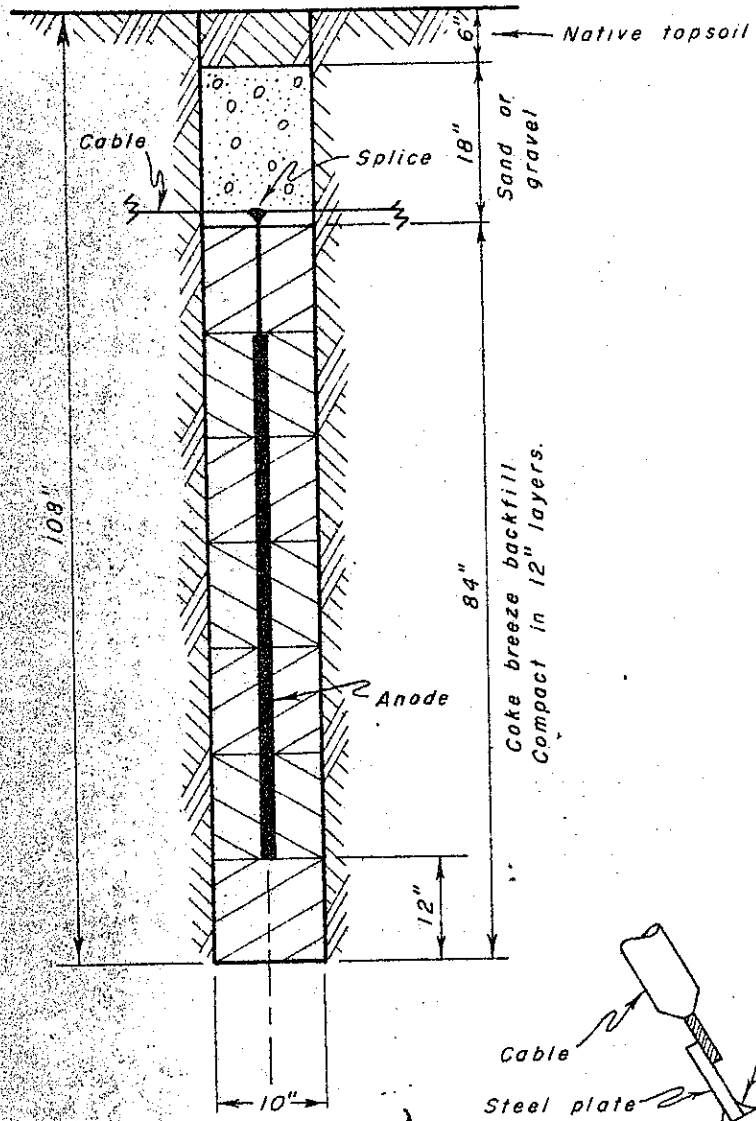

CABLE DETAIL

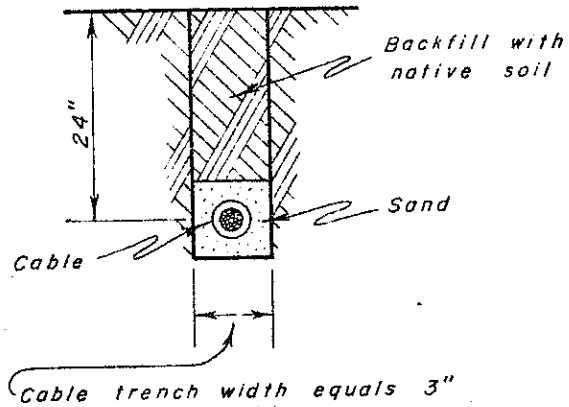

Cable trench width equals 3" plus O.D. of cable.

Cable shall have a min. of 1 1/2" sand blanket all around in expansive clay soils. In sandy soils, omit sand blanket and trench width to be minimum of 1" plus O.D. of cable.

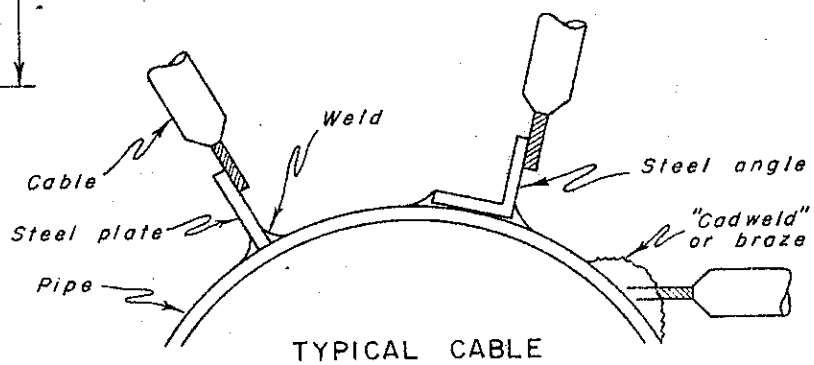

TYPICAL CABLE CONNECTIONS TO PIPE

Minimum dimensions of steel connector to be 3/8" thick and 2" in other directions. Cable to have a min. of 1" length brazed or otherwise connected to steel connector or pipe. The steel connector is to be welded all around. Pro-Seal EP-711, or equal, shall be spread a min. of 1/2" thick 3" beyond all exposed metals used for connecting the cable to the pipe. A sand blanket shall be placed 6" in all directions from the cable connection prior to backfilling with native soil.

ClibPDF - www.fastio.com

ClibPDF - www.fastio.com

EXHIBIT VII

CATHODIC PROTECTION
CABLE SPLICING DETAIL

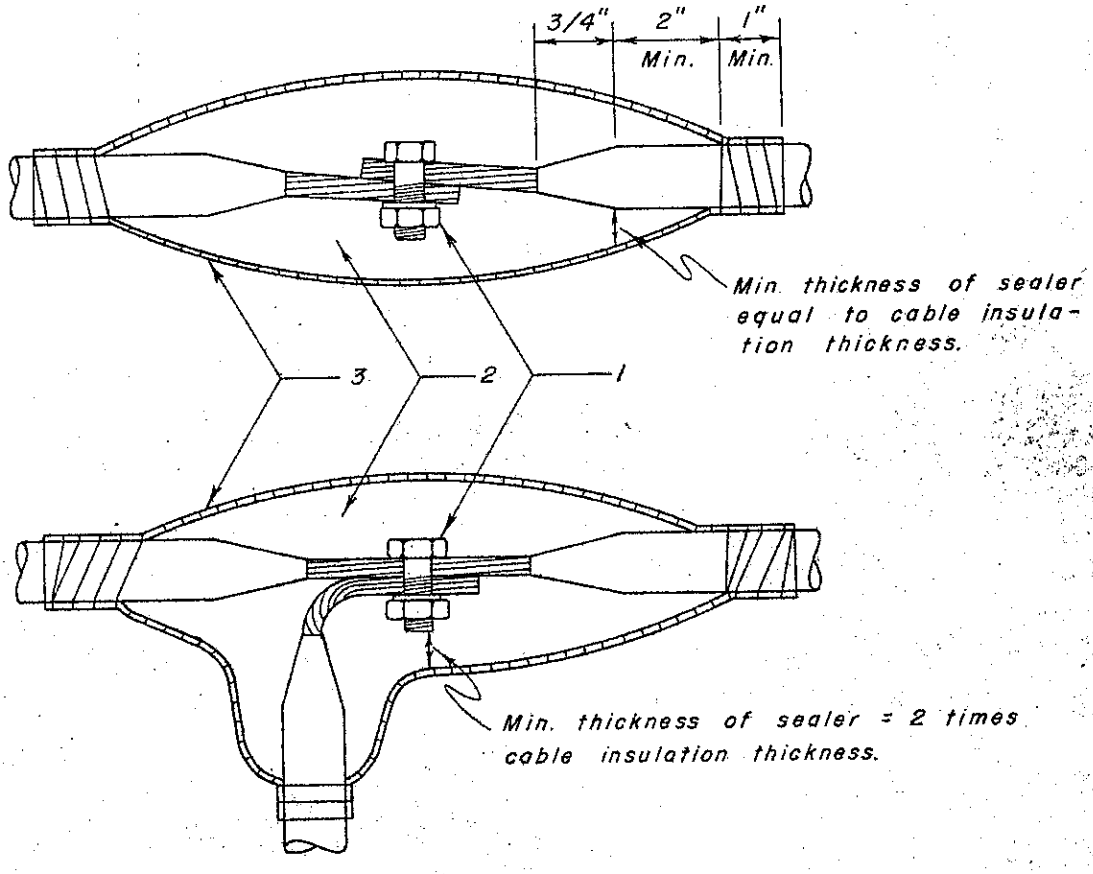

1. Split bolt connector or equal.
2. Sealer - Use Pro-Seal EP 711 or equal. (Coast Pro-Seal & Mfg. Co., Los Angeles.)
3. Minimum of three layers half lapped of "Scotch" No. 33 Electrical tape or equal.

OR

1. Welded connection by the "Cadweld Process" or equal.

2. & 3. Scotchcast Splicing Kit utilizing an epoxy type resin or equal.

Note:
Cable at the splice shall be free of dirt, grease, or other foreign matter prior to the application of sealing materials.

ClibPDF - www.fastio.com

ClibPDF - www.fastio.com