3463
c.2

STATE OF CALIFORNIA
DEPARTMENT OF PUBLIC WORKS
DIVISION OF HIGHWAYS

OPERATIONS MANUAL

for the

TRUCK MOUNTED PROFILOGRAPH

LIBRARY COPY
Transportation Laboratory

June 1957

57-16

MATERIALS & RESEARCH DEPARTMENT

ClibPDF - www.fastio.com

ClibPDF - www.fastio.com

STATE OF CALIFORNIA
DEPARTMENT OF PUBLIC WORKS
DIVISION OF HIGHWAYS
MATERIALS AND RESEARCH DEPARTMENT

OPERATIONS MANUAL

for the

TRUCK MOUNTED PROFILOMETER

F. N. Hveem
Materials and Research Engineer

Prepared by:

Robert N. Field
Structural Materials Section

June 1957

ClibPDF - www.fastio.com

ClibPDF - www.fastio.com

INTRODUCTION

The following text is prepared to cover the theory and practical operation of the truck mounted profilometer such that nominal electronic or mechanical repairs can be made in the field by an operator acquainted with the unit.

Part I describes the component parts and gives a brief explanation of operational methods based on field experience.

Part II describes the more intricate complexities of design and covers the technical aspects of the equipment.

ClibPDF - www.fastio.com

ClibPDF - www.fastio.com

TABLE OF CONTENTS

		Page
Introduction		
Part I.	Description and Operation	1
Part II.	Theory and Servicing of Equipment	5
	A. Vertical Plot System	
	B. Horizontal Plot System	
	C. Wiring Diagrams and Trouble Shooting	
Appendix		
Figure 1	Profilometer Equipment Assembly	
Figure 2	Front Operating Position	
Figure 3	Top Operating Position	
Figure 4	Front Wheel Assembly	
Figure 5	Front Wheel Assembly (Retracted)	
Figure 6	Rear Wheel Assembly	
Figure 7	Center Wheel Assembly	
Figure 8	Recorder	
Figure 9	Recorder Pen Carriage Assembly	
Figure 10	View to Rear of Profilometer	
Figure 11	Profilometer Sign, Flag, and Light Arrangement	
Figure 12	Faulting Gauge Positioning	
Figure 13	Faulting Gauge Reference Frame	
Figure 14	Faulting Gauge Scale	
Figure 15	Profilogram (Faulting Gauge vs. Profilometer)	
Figure 16	Profilogram (Reflection of Truck Bounce)	
Figure 17A	Profilometer Position Recording Between Joints	
Figure 17B	Profilometer Position Recording Joints	
Figure 18	Profilograms from Hand Push Profilometer	
Figure 19	Differential Transformer Schematic	
Figure 20	Synchro Schematic	
Figure 21	Compensating Wheel Assembly	
Figure 22	Recording Wheel Assembly	
Figure 23	Differential Transformer Detail	
Figure 24	Algebraic Summation of Transducers	
Figure 25	Comparison: Profilograph vs. Level Notes	
Figure 26	Frequency Response of Pen Carriage	
Figure 27	Profilograph Recorder Chart Drive System	
Figure 28	Atcotran Amplifier Original Diagram	
Figure 29	Revised Atcotran Amplifier Diagram	
Figure 30A	Recorder Wiring Diagram	
Figure 30B	Recorder Parts List	
Figure 31	Receptacle Location on Truck	
Figure 32	Differential Transformer Truck Circuit	
Figure 33	Synchro and Power Circuit on Truck	
Figure 34	A. C. Supply and Circuitry	
Figure 35	Chart Drive Synchro Circuit	
Figure 36	Pneumatic Control System	

ClibPDF - www.fastio.com

ClibPDF - www.fastio.com

PART I

DESCRIPTION AND OPERATION

The truck mounted profilometer is a modified 2 1/2 ton survey truck equipped with special mounting brackets and fittings which are used for connecting the profile recording wheel assemblies to the truck frame. Air hose fittings are provided at the front, center, and rear of the truck frame and are connected to the wheel assembly retracting cylinders by means of flexible air hoses. Watertight electrical fittings are provided for the electrical transducers. As shown in Figure 1, the truck is parked on a shoulder area while the wheel assemblies and recorder are attached to the mounting brackets. The wheel assemblies are pneumatically retracted until the truck is lined up in recording position on the pavement. The wheels are then lowered, and an air load of 40 psi is applied to the center recording wheel. As the truck approaches the initial reference mark indicating the starting point, the electronic circuits are energized. When the driving guide reference target (mounted on the front wheel assembly) passes the reference mark, the operator indexes the chart to the location on the pavement. When the profilometer has passed the end of the section being recorded, the wheels are retracted, and the truck can resume speed and proceed to another section or to a suitable shoulder area for disassembly.

Figure 2 shows the profilometer in operating position for close observation of the pavement surface. This front mounting arrangement is used when recording profiles of new pavements, profiles of cracked pavement sections, or in conducting other special studies. The driving guide at the edge of the pavement is viewed by the truck driver through a mirror arrangement. The guide is also used by the operator for indexing joint, crack, and reference marks on the chart.

Two sets of Western Electric operator's headsets provide intercommunication between driver and operator. When recording voluminous data, the operator speaks through a portable microphone to an automatic dictating machine. The dictating machine is mounted in a side compartment of the truck and can be controlled either from the front or top operating positions.

The forward operator platform is supported by a sprung-fork trailer wheel which is hinged to the front bumper. This method of suspension minimizes the transmission of objectionable vibrations into the electronic equipment.

Figure 3 shows the operating position preferred while recording profiles during heavy traffic or for recording bituminous pavement profiles where a crack or joint record is

ClibPDF - www.fastio.com

ClibPDF - www.fastio.com

not needed. The truck speed during these recordings ranges from 3 to 4 mph. The truck frame establishes a reference plane for the wheel assembly transducers. The recording speed must be reduced on rough or heavily faulted pavements to minimize reflected low frequency vibration or "hash" from the truck assembly which shows up on the profilogram.

The profilometer includes both mechanical and electrical integration for the purpose of establishing a datum. The four-wheel carriages both in front of and behind the truck wheels integrate pavement inequalities mechanically. These multiple wheels, which are independently supported by the reference carriages, are used to reduce to a practical minimum the recording by any one wheel of objectionable vertical movements. The first and second wheel axles of each carriage are connected to a bearing mounted tube which is free to turn axially on the wheel carriage (see Figure 21). The third and fourth wheel axles of each carriage are similarly connected and are independent of the motion of the first two wheels. This wheel assembly design reduces the effective vertical movement of any compensating wheel by a ratio of 4 to 1 into the compensating transducer. Further reduction is accomplished electronically by a transducer to recorder ratio of 2 to 1. The effective trace by the recorder of abrupt vertical movements by any of the compensating wheels will, in effect, be reduced by a ratio of 8 to 1. A greater multiplicity of wheels on the compensating wheel carriages would establish a more integrated datum which would theoretically result in a more damped reference signal. However, measurements show that the errors entering the servo loop from the two "4 wheel" reference assemblies do not exceed the noise level or "road hash" picked up by the recording wheel.

Figure 4 shows the front compensating wheel assembly. The double acting cylinder piston is in the extended position to permit the wheels to rest on the pavement. Slack in the retracting cable is necessary to permit operation over irregular surfaces.

Figure 5 shows the front compensating wheel assembly in the retracted position. A safety link is coupled to the assembly to relieve tension on the retracting cable while the truck is operating at high speeds between the profile recording sections. The wheel assemblies are disconnected and stowed in the rear compartment when traveling long distances between profile sections.

Figure 6 shows the rear compensating wheel assembly mounted to record a course 30 inches from the edge of the pavement. This location on the pavement is normally referred to as the traffic pattern's "outer wheel path". The wheel assemblies can be mounted on the opposite side of the truck for recording the inner wheel path.

ClibPDF - www.fastio.com

ClibPDF - www.fastio.com

Figure 7 shows the recording wheel assembly in the recording position. The belt-driven synchro generator is mounted ahead of the wheel. The synchro generator transmits and electrically interlocks the rotary motion of the recording wheel to the chart drive synchro motor. A pneumatic retracting and loading cylinder is used to apply an effective load of 100 pounds to the recording wheel. This loading eliminates excessive "hash" on the profile resulting from the recording wheel bouncing over gravel or a rough pavement surface.

Figure 8 shows an interior view of the profilograph recorder. Controls are accessible on the outside of the case for advancing or rewinding the paper, lifting the pens, and positioning the profile pen on the chart. Figure 9 shows the profilograph recorder pen carriage assembly. The pen carriages ride on precision linear bearings. The joint marker pen (top) is actuated by a solenoid. The adjustable crack and reference marker pen (center) can be actuated in either direction by a dual solenoid. The profile pen (bottom) is attached to a cable driven by the servo mechanism located below the chart platen. Capillary feed pens have been developed by the laboratory to function under a wide range of atmospheric conditions at temperatures ranging from 30 to 150 degrees F. and relative humidities between 10 and 80 percent. The pens pivot in the carriages on small spring loaded ball detents and are readily detached for cleaning. The chart-to-pavement ratios on standard profilograms are 1 inch to 25 feet horizontally, and 1 inch to 1 inch vertically. The profile pen records 1/2 inch behind the event marker pen. This allows the operator to reference the chart to the pavement by indexing to a guide target mounted 12 1/2 feet ahead of the recording wheel. For special studies, any horizontal scale ratio between 1 inch to 10 feet and 1 inch to 100 feet can be selected. The vertical scale can be changed from a direct 1:1 reading to a 2:1, or any intermediate proportion between these two limits.

Figure 10 shows a view to the rear of the profilometer truck operating on the inside lane. This traffic pattern is typical of the type of channelization caused by the profilometer operating on the inside lane of an expressway or freeway. Highway safety practices normally indicate that signs, flags, and cones should be placed between 400 and 600 feet ahead of any restriction. This method of cautioning has been found inadequate because an average profile section may be several miles in length, and the distances between the signs and the truck are too great. Experience in the field has proven that the hazard to the public from operating the profilometer at speeds ranging from 3 to 4 mph can be reduced by use of the flag, sign, and light arrangement as shown in Figure 11. The luminous red flags and flashing red lights are positioned on the truck to attract the attention of motorists more than 2000 yards behind the truck. The traffic arrow is reversed when operating on the inside lane adjacent to the median strip. While operating on two lane roads, the arrow is removed and the traffic is controlled by a flagman standing on the rear platform.

ClibPDF - www.fastio.com

ClibPDF - www.fastio.com

The accuracy of the profilometer in reproducing faulted joints or cracks can be verified with a faulting gauge. Figure 12 shows an engineer positioning the faulting gauge for making measurements of the difference in elevation between adjacent slabs on PCC pavement sections. The view of the faulting gauge in Figure 13 shows the reference plane established by an aluminum frame supported by three ball-joint mounted tripods. A rod is coupled to the weighted measuring tripod by a ball joint. An index line is etched on a glass window supported by a frame mounted on the top of the measuring rod (Figure 14). Faulting is indicated, plus or minus, on a scale attached to the reference frame extension. The scale is ruled in tenths and fiftieths of an inch and is read to the nearest .02 on smooth surfaces and .05 on rough surfaces. Level rod readings have proven the accuracy of the faulting gauge to be within the above limits.

Figure 15 is a profilogram reproduction showing a section of heavily faulted PCC pavement. The faulting gauge readings are above the profile. The indicated faulting measured on the profilogram is entered below the profile. Joint marks have been extended for the convenience of tabulation.

Figure 16 is a profilogram reproduction showing the reflection of truck bounce on a profile trace. This trace is typical of the profiles recorded on heavily faulted pavements. This is caused by the truck wheels jolting the mechanism when dropping over a faulted joint 7 1/2' from the recording wheel.

Figure 17A shows the recording wheel position as the truck wheels cross two consecutive joints. When operating on pavements designed for 15 foot joint intervals, the recording wheel (center) is between joints as the truck wheels cross the joints. On the profilogram the indicated error under these conditions can readily be integrated to show approximate slab curl or tilt, and is not considered detrimental to profile interpretation. Figure 17B shows the truck wheel position as the recording wheel crosses a joint. Note that the truck wheels and compensating wheels are clear of the joints. The profile traced during this period is relatively free from objectionable external vibrations.

ClibPDF - www.fastio.com

ClibPDF - www.fastio.com

PART II

THEORY AND SERVICING OF EQUIPMENT

A. Vertical Plot System

The profilograph recorder pen drive system is basically a null type circuit, balancing against the algebraic summation of three differential transformers. In this circuit the output from the wheel assembly transformer units Ta, Tb, and Tc (Figure 19) are out of phase with that of the balancing transformer Ts, and the differential voltage, from Ta, Tb, and Tc, is fed through an amplifier to one phase of the two phase pen drive servo motor. The other phase of this motor is energized continuously from the 115 V A.C. 60 cycle line. When the wheel assembly transformers and the balancing transformer are producing an equal and out of phase voltage, there will be no input to the amplifier, and the servo motor will be at rest. However, if the armatures of any of the wheel assembly transducers are displaced slightly, a restoring signal will be produced which will cause the motor to rotate and return the system to balance through Ts. When transducers Ta, Tb, and Tc are properly connected, their electrical outputs are algebraically summated in such a way that their phase becomes the plus or minus sign for this magnitude. The servo mechanism balances out the resulting signal, and the pen indicates the algebraic sum of the voltages from the three variable transducers Ta, Tb, and Tc. The basic formula for the system of levers as is designed for the profilograph is

$$\frac{A+C}{2} - B = \text{vertical (x) plot}$$

That is, the profile is the difference in elevation between the reference plane established by A and C through the truck frame, and recording wheel B. This algebraic summation is attained by making transducer Tb opposite in phase to transducers Ta and Tc by physically mounting the transducers on opposite sides of their respective drive quadrants (see Figures 21 and 22). The drive quadrants for Ta and Tc are machined to one-half the radius of the quadrant for Tb, so that the mechanical inputs of Ta and Tc are half that of Tb for a given vertical movement of the wheel assemblies. The electrical outputs of Ta plus Tc plus Tb = vertical plot, which is an electronic summation of the original algebraic equation. The voltage output of a differential transformer is linear, and the magnitude of that output is in direct proportion to the physical displacement of the armature from a null or zero position. The ratio of voltage output to the mechanical displacement is 0.0385 millivolts/0.001 inch/volt input for the type 6206 differential transformers on the profilometer.

ClibPDF - www.fastio.com

ClibPDF - www.fastio.com

For the purpose of illustration, see Figure 24 showing how three basic profiles can be measured although the reference plane is not parallel to the pavement. It is apparent from these figures that pitch or roll of the truck frame is cancelled from the resultant signal by the compensating transducers Ta and Tc. However, this is true only if the truck frame is considered completely rigid. By measurements on the Profilograph truck frame, it has been determined that vibrations enter into the servo loop from racking and flexing of the frame on rough or heavily faulted pavements. These vibrations are within the response frequency of the recorder and superimpose objectionable hash on the profile line. By means of electronic damping discussed in detail in the following section, this hash has been suppressed to a degree that is not considered objectionable.

The pen drive servo system responds electronically to any signal frequency of 60 cps or less, but can attain full response mechanically only to frequencies below 10 cps with an amplitude of .15 inches or less, due to inertia of the servo motor and pen carriage assembly. In effect, any signal frequencies above 10 cps are mechanically dampened. The resultant trace of signals above 10 cps drops in amplitude from full response at 10 cps to zero response at 40 cps and above (Figure 26).

Typical of most systems employing mechanical response, the mechanical inertia of the system tends to be oscillatory due to over-correction developing with rapid pen movement. This effect is limited by variable electronic dampening in the servo amplifier. As a result a general profile of most pavement surfaces can be recorded which is comparative to a true profile plotted from field level notes. (Figure 25).

The term "dead zone" is commonly applied to the region of nonresponse of electronically dampened oscillatory signals derived from a null balance servo system. A smooth trace is the result of a heavily damped signal with a wide "dead zone". A narrow "dead zone" will show all but the very minor or higher frequency irregularities. Field use has shown that the amount of damping necessary to obtain an acceptable trace on all type pavement surfaces requires some adjustment in the width of the "dead zone." The degree of pavement roughness, vibration picked up from the truck frame, or reference wheel bounce, determines the minimum width of the dead zone. Extremely rough or heavily faulted pavements necessitates an increase in the dead zone width commensurate with a readable profilogram.

B. Horizontal Plot System

A synchro device is mechanically a miniature bipolar rotating field three-phase alternator. The rotor is wound with a three circuit distributed Y-connected winding; the stator

ClibPDF - www.fastio.com

ClibPDF - www.fastio.com

with a single-phase concentrated winding. Electrically, in normal operation, the synchro device acts as a transformer, and voltage and currents existing in the instrument are all single phase. The stator winding is excited from an alternating voltage source. By transformer action, voltages are induced in the three elements of the rotor winding, the magnitude depending on the angular position of the rotor. The profilograph synchro system consists of two instruments connected as illustrated in Figure 20. The two stators are excited from a common source, and the rotor leads are interconnected. Assuming the motor synchro rotor free to turn, it will take such a position that the voltages induced in the two rotors are of balanced magnitude and displacement. If the rotor of the generator synchro is displaced by a certain angle and the rotor of the motor synchro is held in its original position, the rotor-voltage balance is altered and circulating current will flow in the windings. This circulating current reacting on the excitation flux provides a torque tending to turn the rotor of the motor synchro to a position where the induced rotor voltages are equal and opposite. Thus any motion given to the generator synchro rotor on the wheel assembly will be transmitted to and duplicated by the motor synchro in the recorder, giving a system of electrically transmitting mechanical motion.

The synchro generator is attached to the recording wheel arm and is driven by the recording wheel through a V belt in a ratio of three turns of the synchro rotor to one turn of the recording wheel. The synchro motor drives a variable speed reducer through a differential gear train (Figure 27). The synchro motor drives one half of the differential, and a 54 rpm reversible gear head motor is geared to the other half of the differential. The output of the differential is geared to the variable speed reducer. By means of advance and retard switches connected to run the gear head motor forward or in reverse, the operator can add or subtract turns from the chart drive gear train. This in effect advances or retards the chart paper to make up for minor variations in the horizontal track of the profile on repeat runs. For accumulative errors in tracking, or when making the original profile of any pavement section, the horizontal scale of the paper can be calibrated to match the actual distance on the pavement by means of the variable speed drive adjustment. The adjusting knob of the variable speed drive unit is geared to a Veeder-Root counter. The pavement to chart ratio is continuously variable over a range from 10 ft/in. to 100 ft/in. The error in repeatability in setting the variable speed drive is less than one percent. The accumulative error or drift when set to a specific scale is less than 0.1 percent.

C. Trouble Shooting

In all cases, when electrical equipment fails to function, see that A/N plugs are in proper receptacles, switches are in "on" position, and fuses are good before proceeding with instructions.

ClibPDF - www.fastio.com

ClibPDF - www.fastio.com

When failure is in pen drive servo system, see that amplifier tube filaments are lit; all No. 2 plugs are in proper receptacles; all transducer armatures are near the physical center of the transformer range; feed back control (sensitivity) is set to highest sensitivity. When pen servo drives pen carriage to either end of chart and the zero set transducer will not center the carriage, isolate the recorder from the external system by placing shorting plugs in the No. 2 receptacles in place of the No. 2 transducer cables from the wheels. Zero set transducer (Tz) should bring pen carriage to center of chart.

If the zero set transducer (Tz) moves the pen carriage, the recorder is operating normally. Set pen carriage to center of chart and remove shorting plug from receptacle 2, box 1, and replace plug from transducer Ta. Move armature of transducer Tb and Tc, repeating check out as on Ta.

Failure of any transducer circuit can thus be isolated. If zero set transducer (Tz) does not move pen carriage, failure is in recorder servo circuit. A continuity and ground check should be made on any faulty circuit. No ground should appear in the transducer circuit except as follows: center taps of the input and primary transformers of the amplifier (Figure 29) are grounded. These can be isolated by removing leads from terminals 1, 3, 6, and 7 on the amplifier chassis (Figure 32). A ground and continuity check can then be made at terminal block "A" referring to Figure 32.

All ground checks should be made with Volt-Ohmeter test leads in ohms and X1000 jacks. Any reading above 300 using this scale (300,000 ohms) is satisfactory. Grounds should be traced out and removed from any transducer circuit having a ground reading below 300,000 ohms. All continuity checks should be made with Volt-Ohmeter test leads in ohms and XI jacks.

ClibPDF - www.fastio.com

ClibPDF - www.fastio.com

Fig. 1 Profilometer equipment assembly.

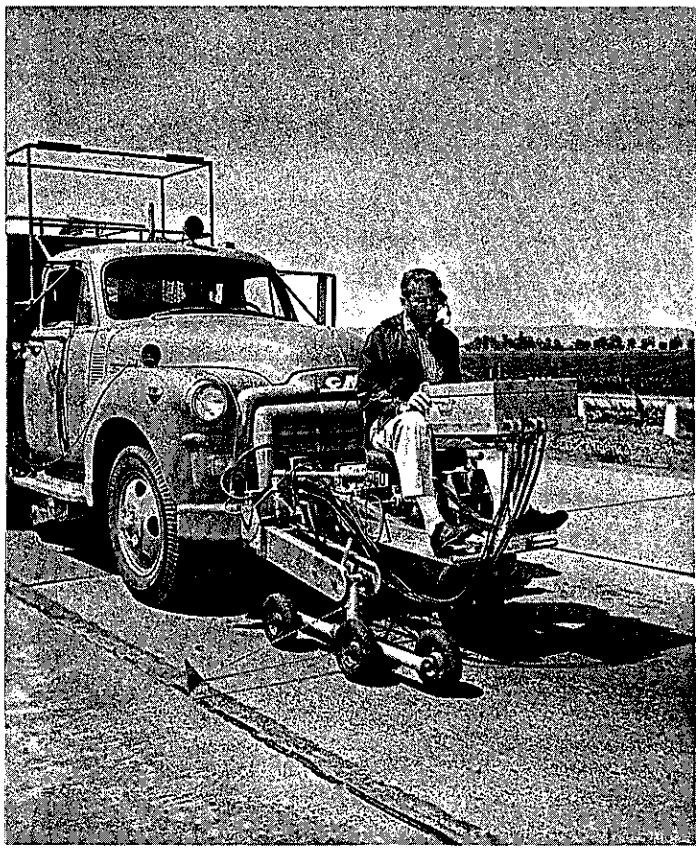

Fig. 2 Front operating position.

ClibPDF - www.fastio.com

ClibPDF - www.fastio.com

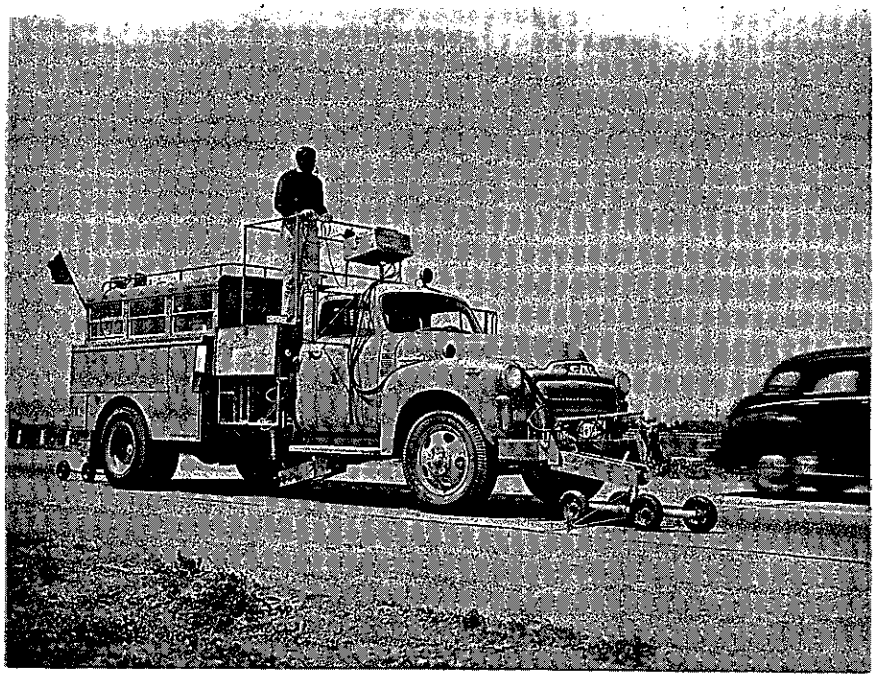

Fig. 3 Top operating position.

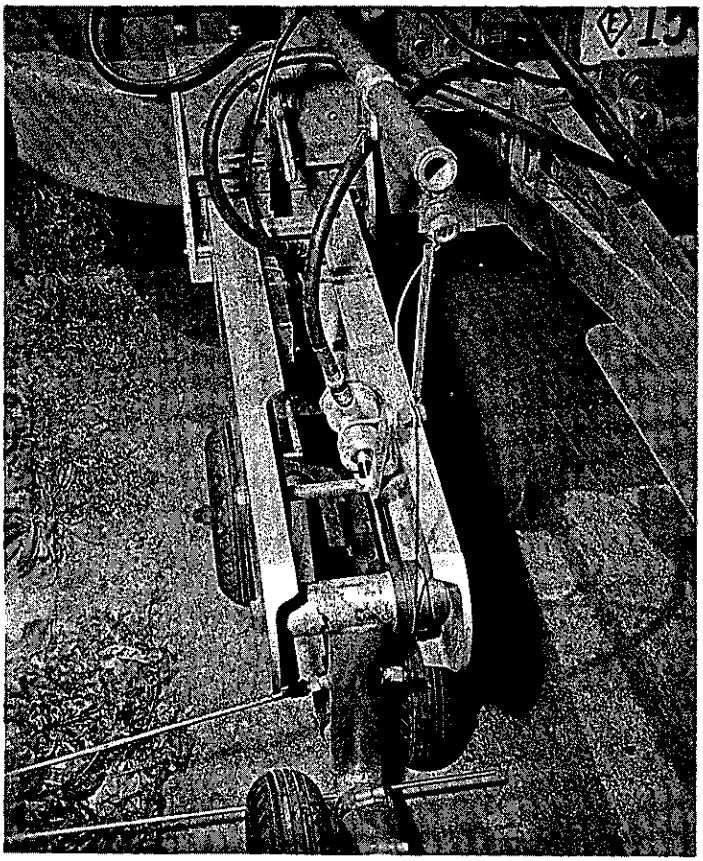

Fig. 4 Front wheel assembly.

ClibPDF - www.fastio.com

ClibPDF - www.fastio.com

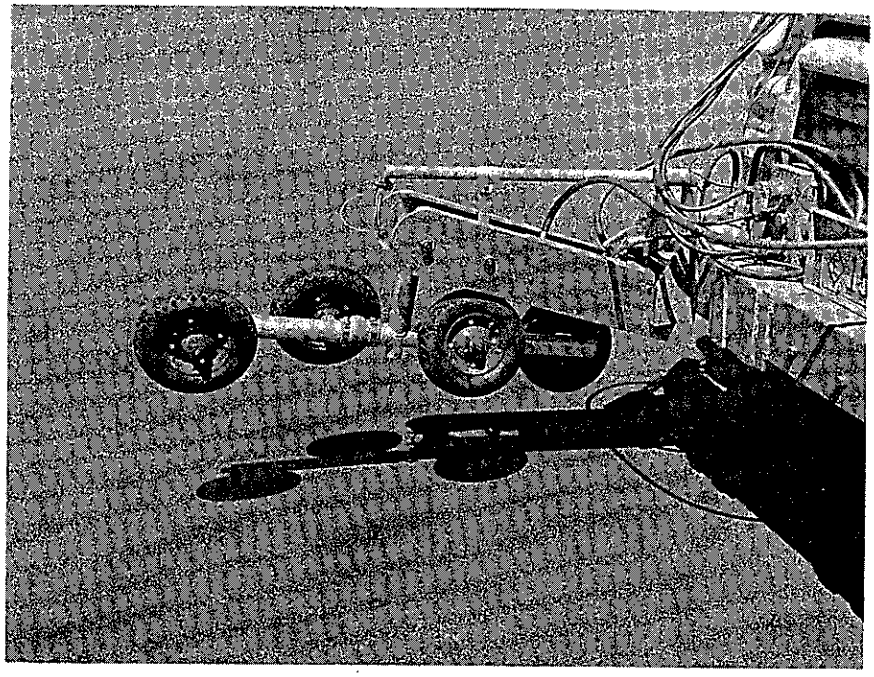

Fig. 5 Front wheel assembly (retracted).

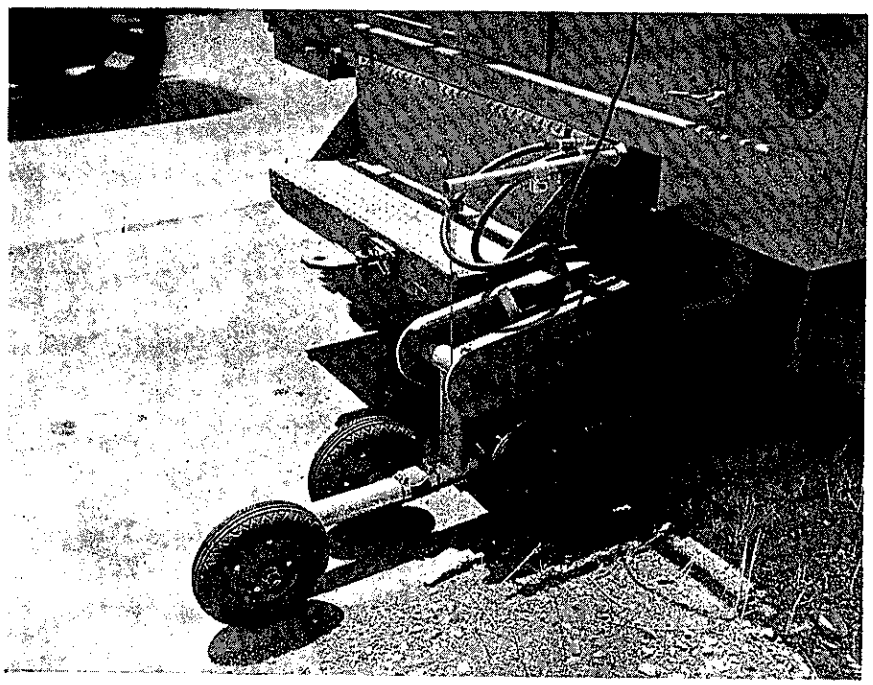

Fig. 6 Rear wheel assembly.

ClibPDF - www.fastio.com

ClibPDF - www.fastio.com

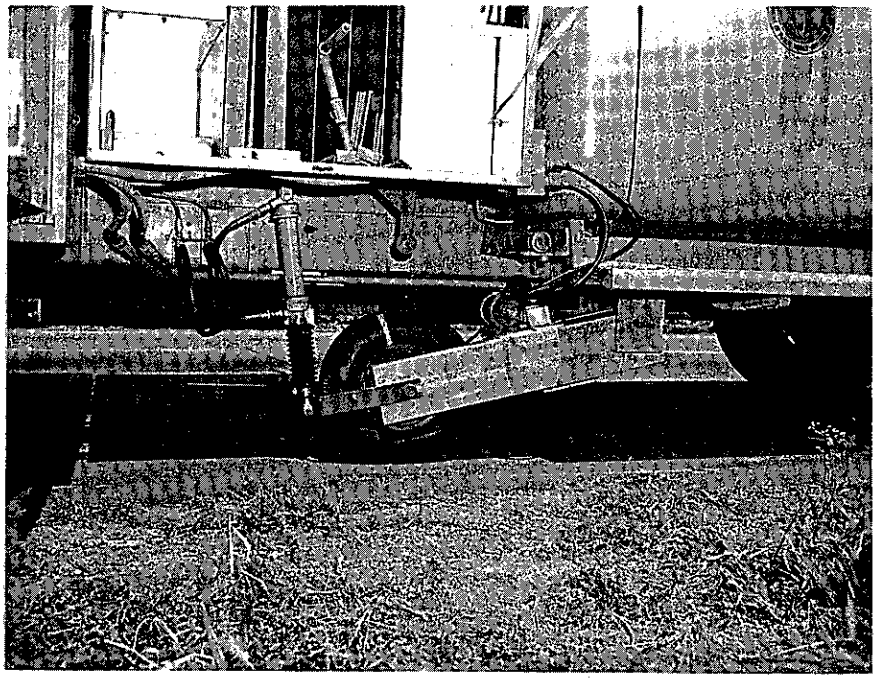

Fig. 7 Center wheel assembly

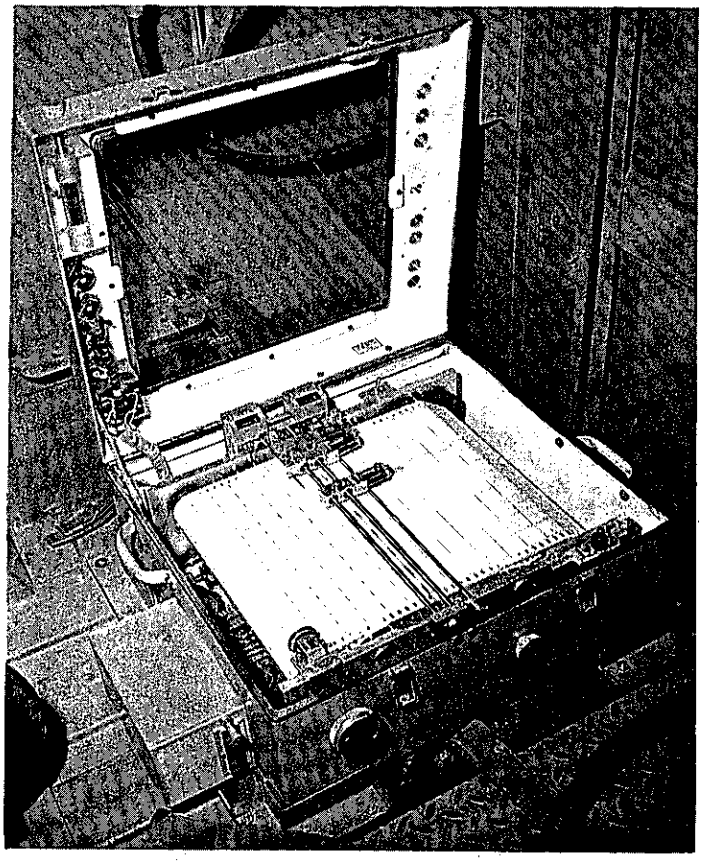

Fig. 8 Recorder

ClibPDF - www.fastio.com

ClibPDF - www.fastio.com

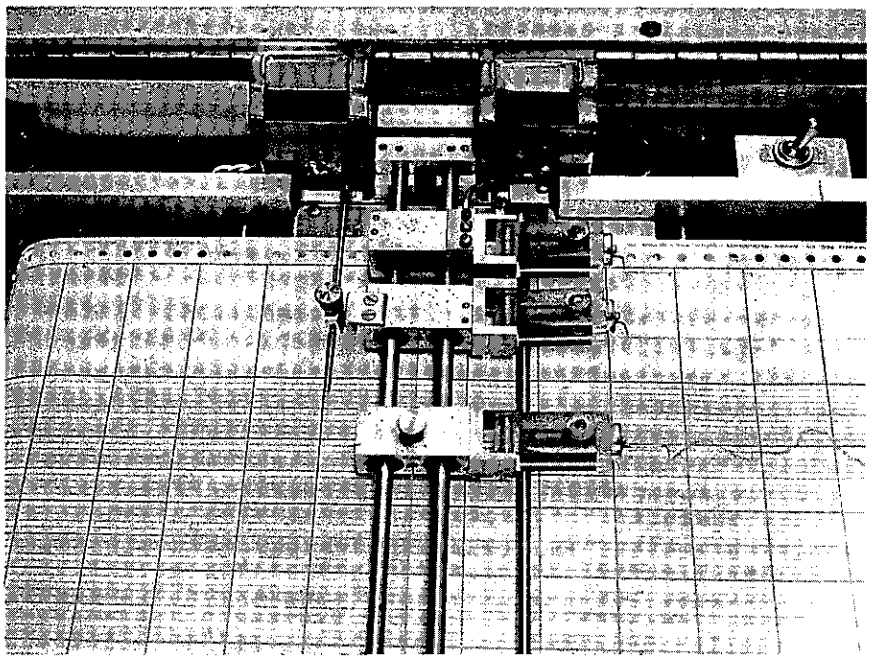

Fig. 9 Recorder pen carriage assembly.

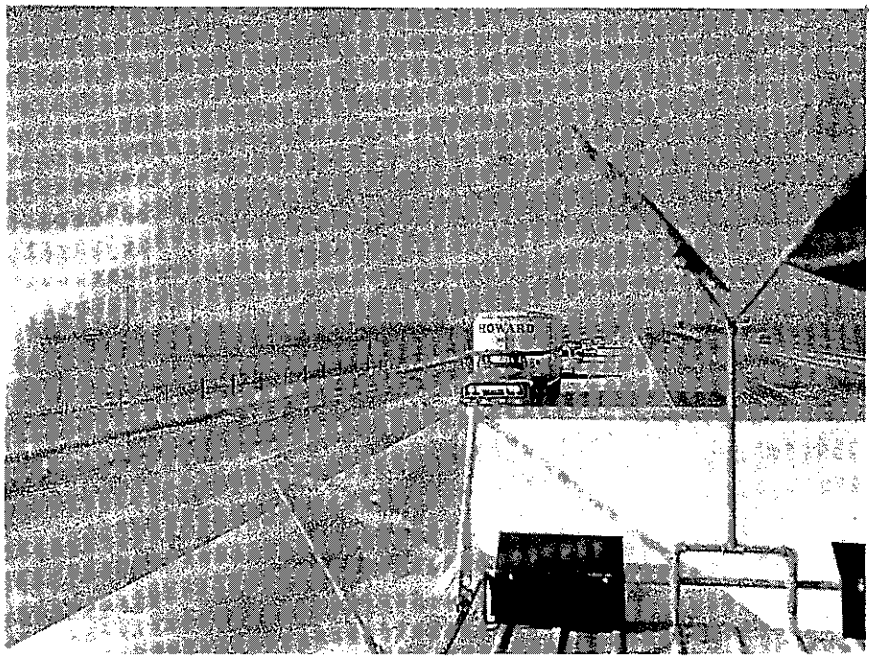

Fig. 10 View to rear of profilometer.

ClibPDF - www.fastio.com

ClibPDF - www.fastio.com

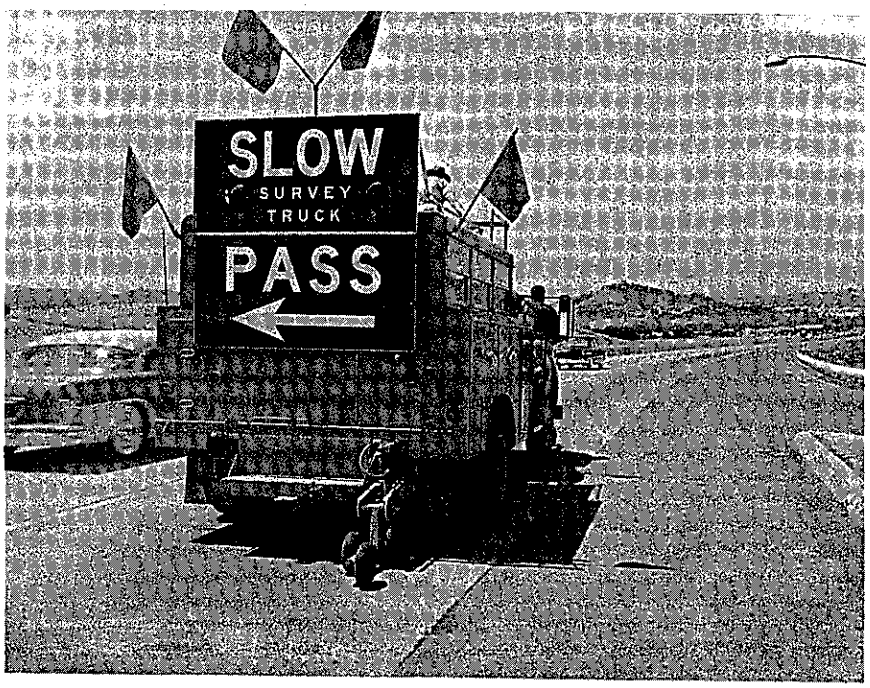

Fig. 11 Profilometer sign, flag and light arrangement.

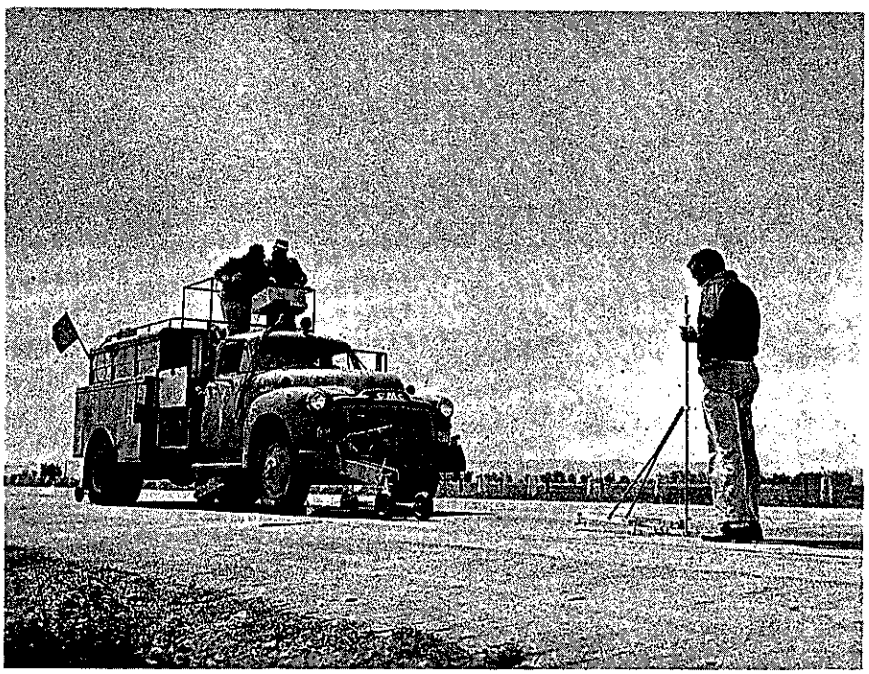

Fig. 12 Faulting Gauge positioning.

ClibPDF - www.fastio.com

ClibPDF - www.fastio.com

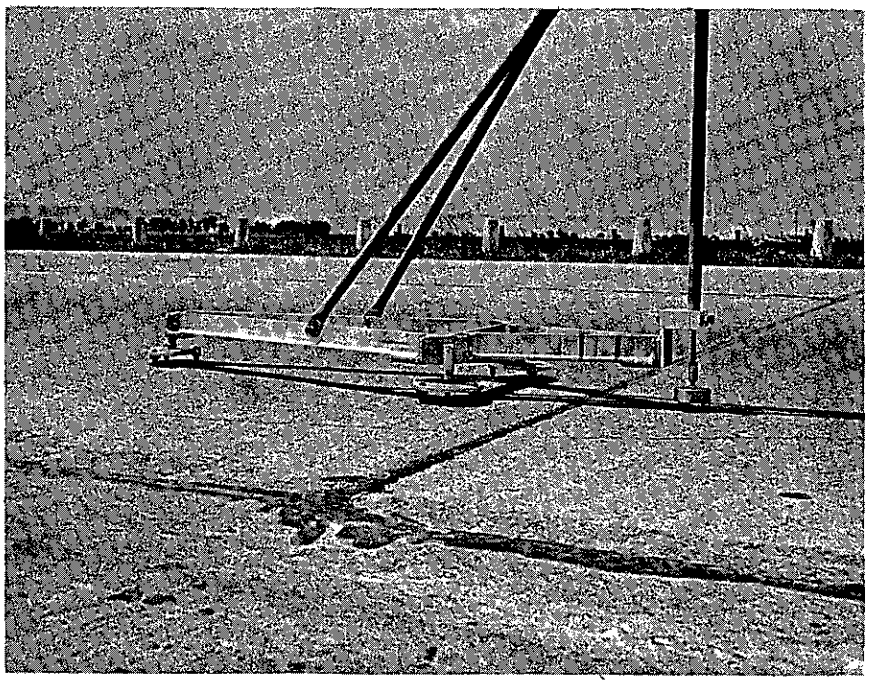

Fig. 13 Faulting gauge reference frame.

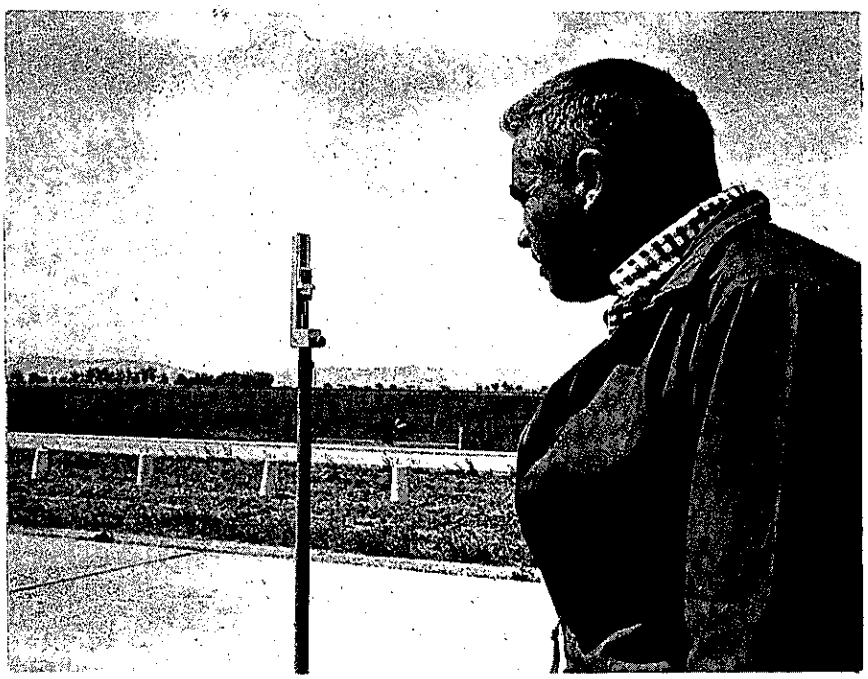

Fig. 14 Faulting gauge scale.

ClibPDF - www.fastio.com

ClibPDF - www.fastio.com

Dist X Solano 6-A PCC 15 ft. Joints

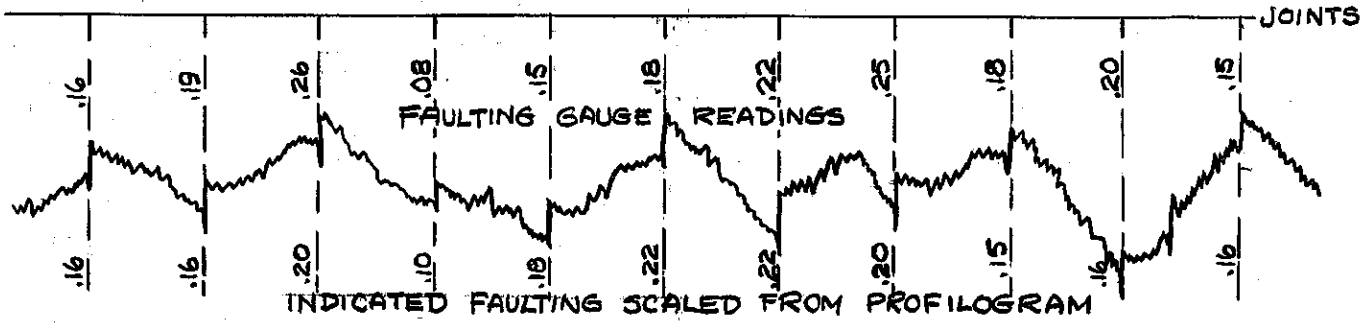

Fig 15 Profilogram vs. Faulting Gauge

(Vertical "step off" at faulted joints scaled from profilogram compared to direct measurement with faulting gauge.)

Dist X Solano 6-A PCC 15 ft. Joints

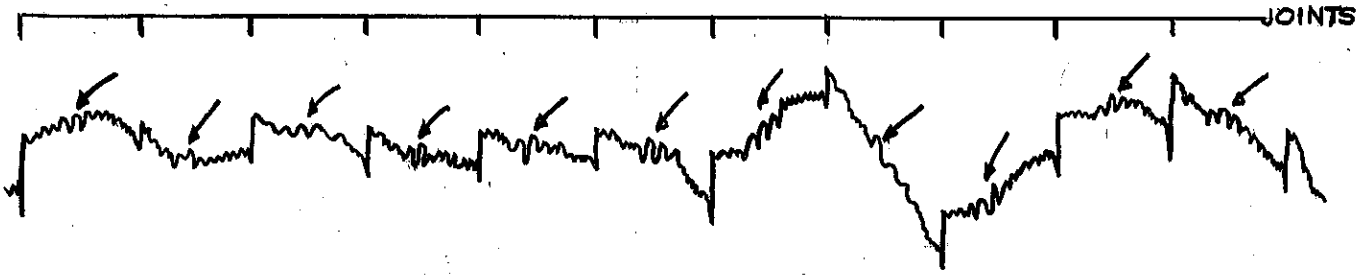

Fig. 16 Reflection of Truck "bounce" in Profilogram

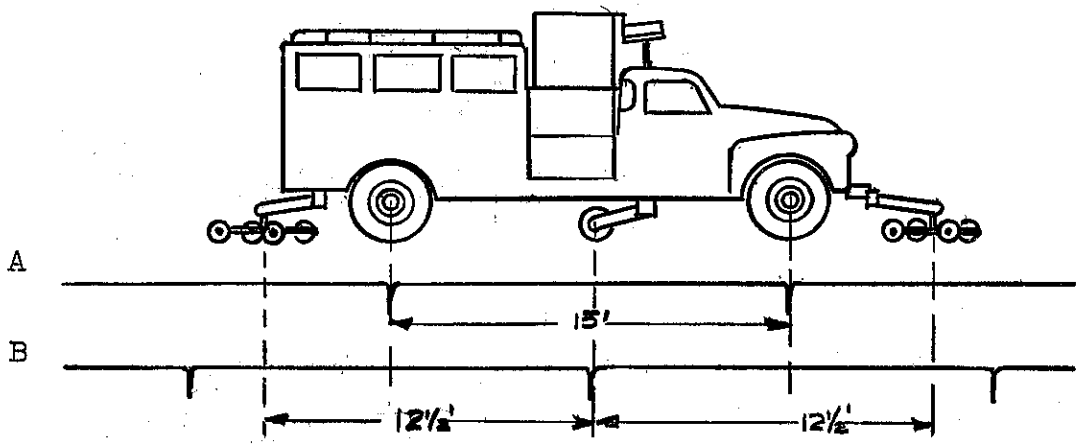

Fig 17A Position of Profilometer Recording between Joints

17B Position of Profilometer Recording Joints

ClibPDF - www.fastio.com

ClibPDF - www.fastio.com

Dist III Yolo 50-E PCC 15 ft. Joints

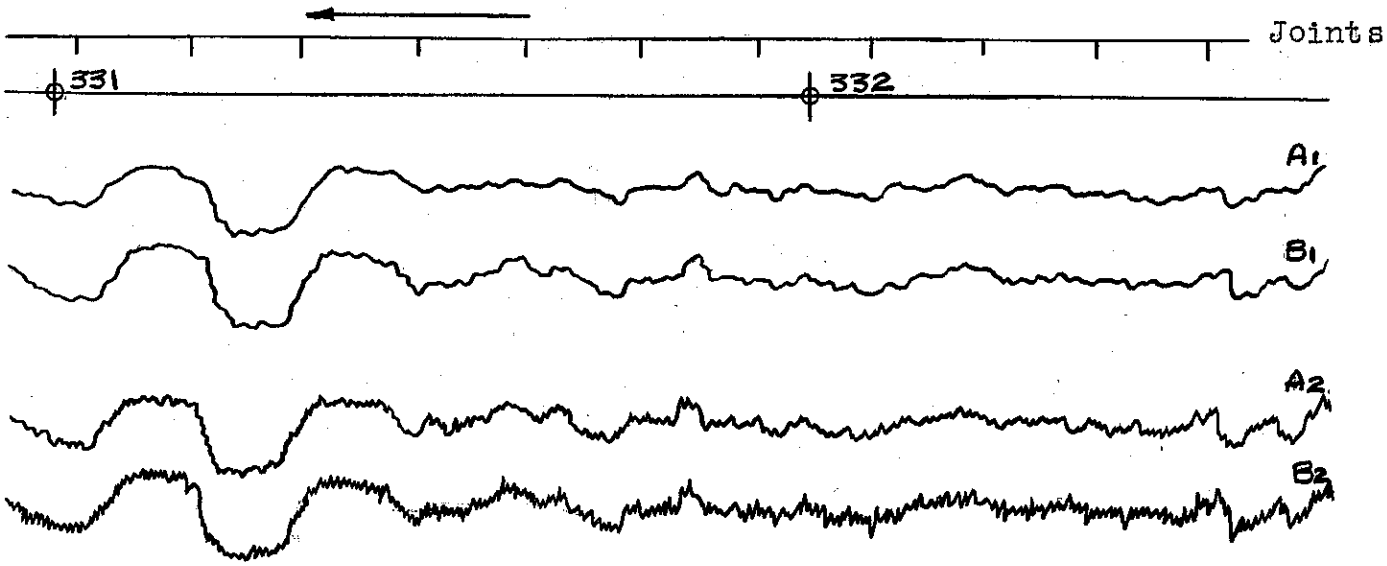

A1 Truck mounted profilometer (sensitivity low)
B1 Hand push profilometer (dash pot by-pass valve open)

A2 Truck mounted profilometer (sensitivity high)
B2 Hand push profilometer (dash pot removed)

Fig. 18 Profilograms traced by Truck mounted Profilometer compared to profilograms traced by hand push Profilometer.

ClibPDF - www.fastio.com

ClibPDF - www.fastio.com

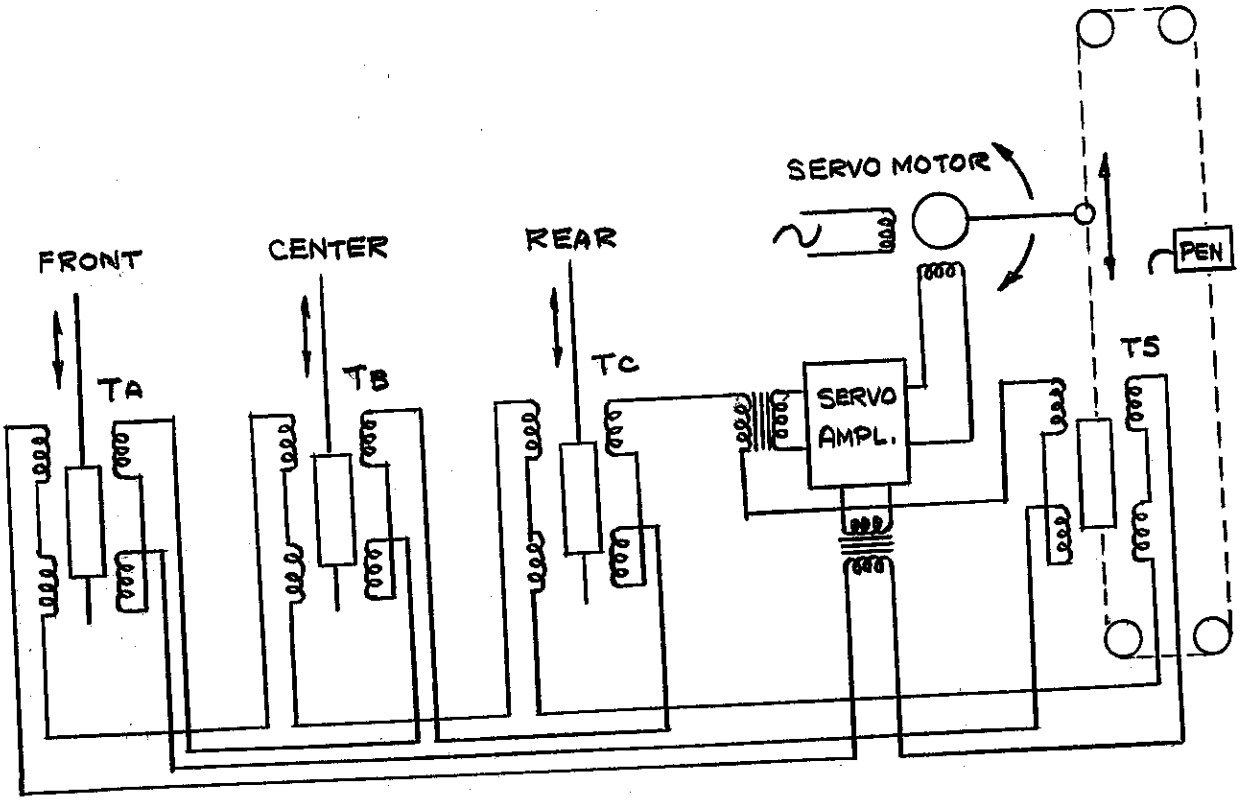

Fig. 19 Algebraic Summation Differential Transformer Schematic

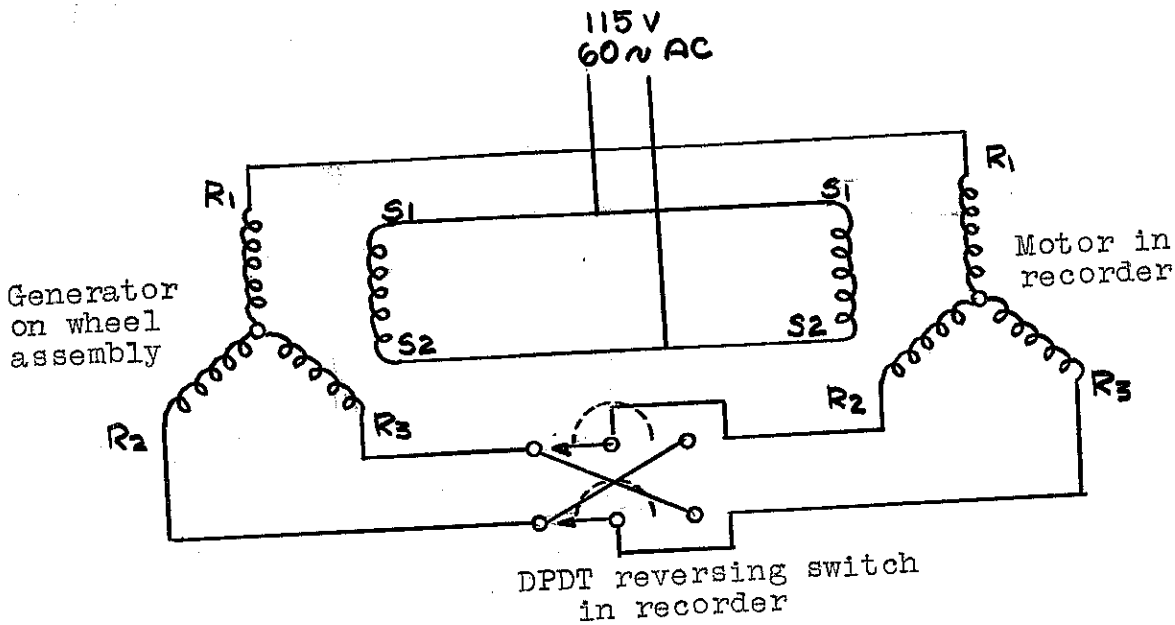

Fig. 20 Horizontal plot synchro schematic

ClibPDF - www.fastio.com

ClibPDF - www.fastio.com

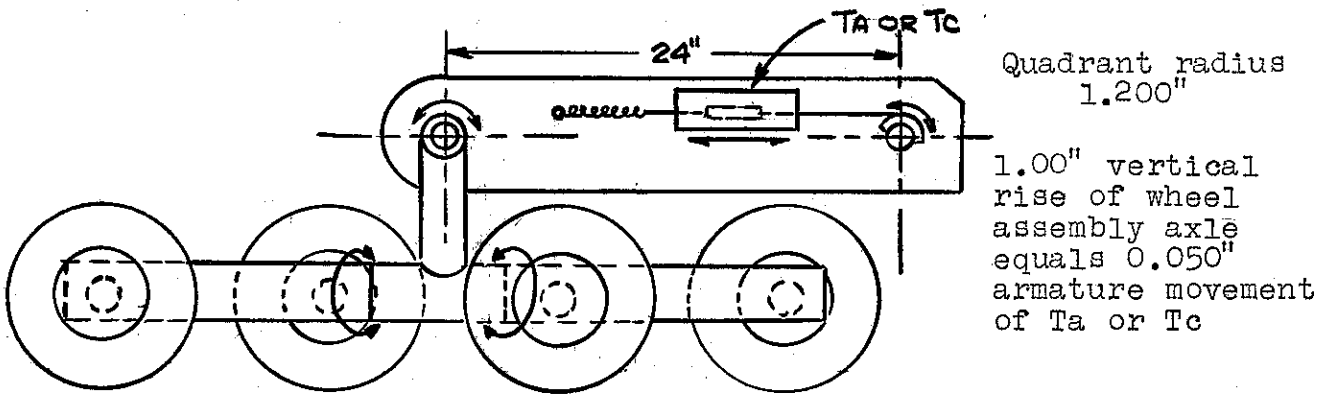

Fig. 21 Front & Rear Compensating Wheel Assembly

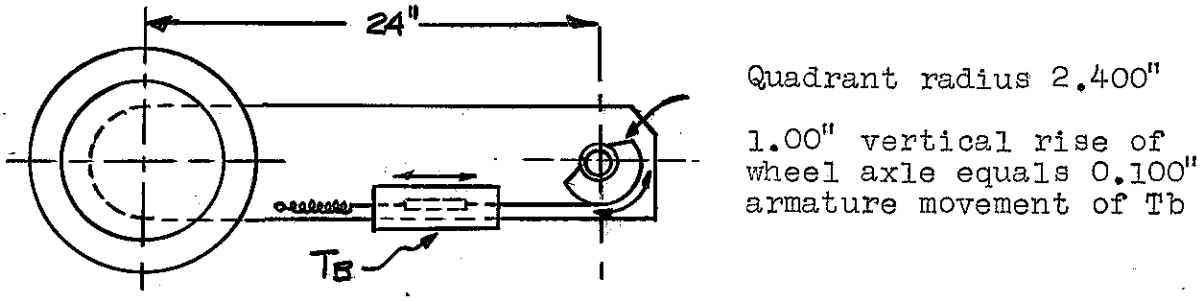

Fig 22 Center Recording Wheel Assembly

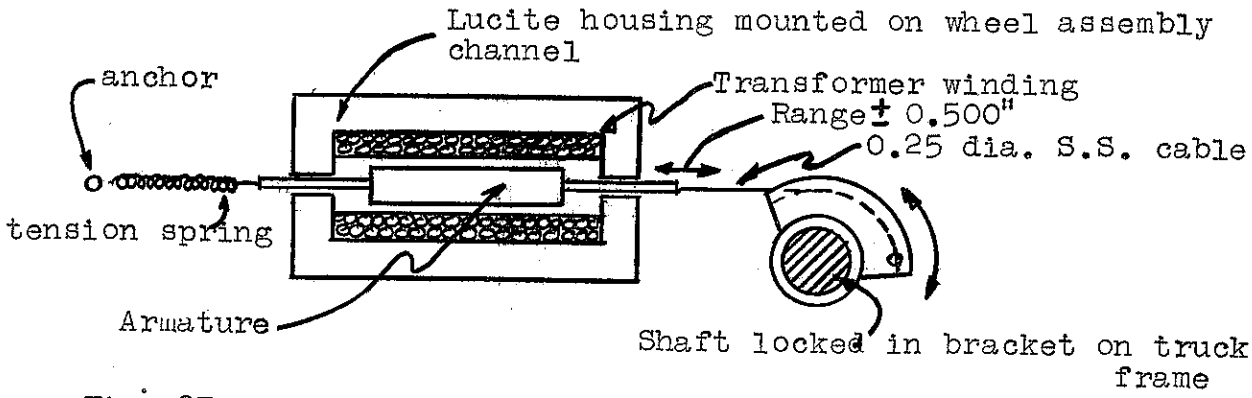

Fig. 23 Detail of Differential Transformer

ClibPDF - www.fastio.com

ClibPDF - www.fastio.com

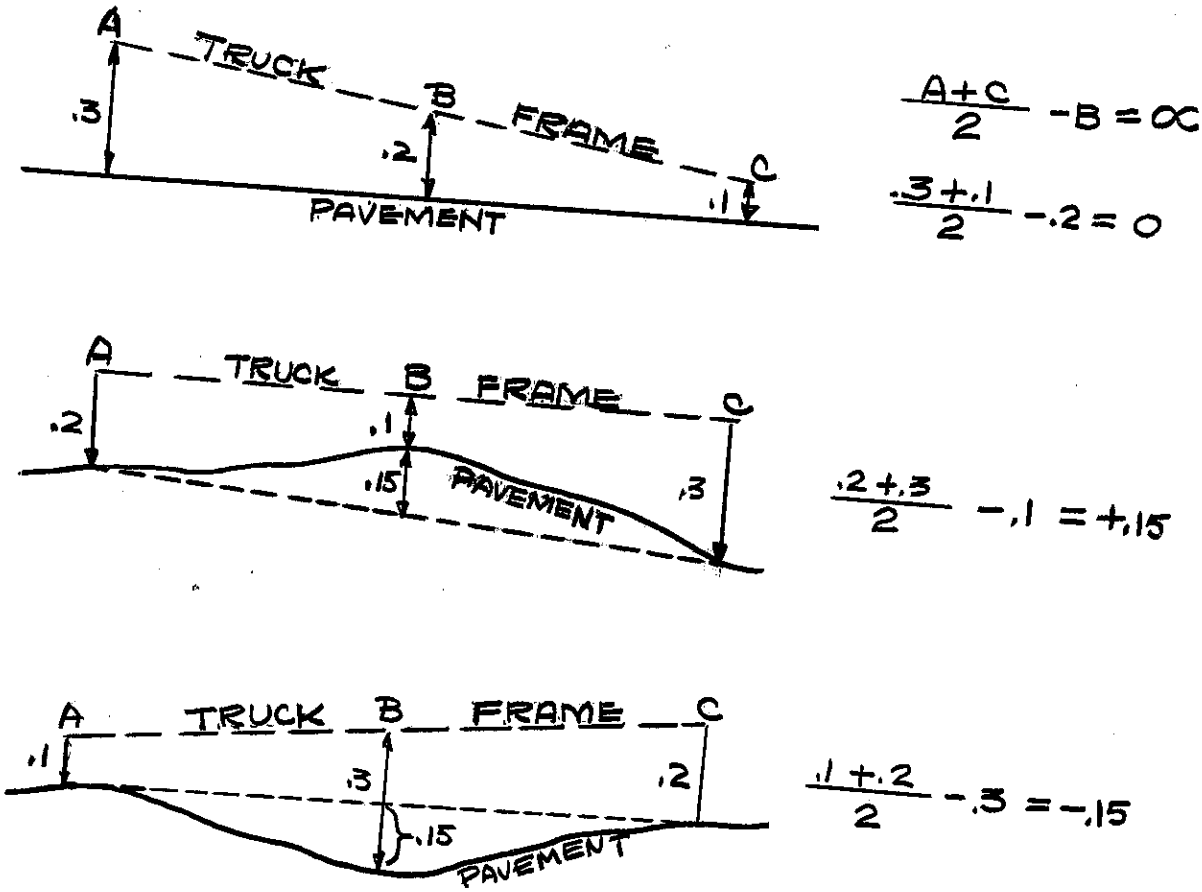

Fig. 24 Algebraic Summation of Transducers

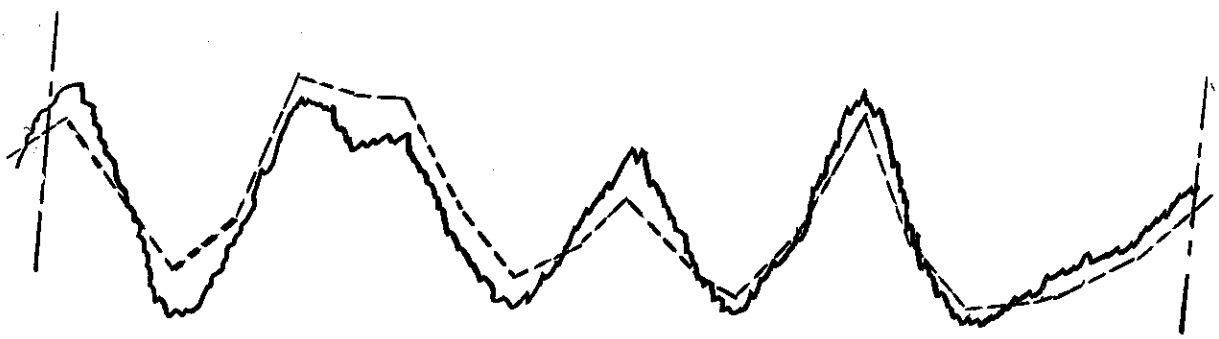

Profilograph
Level Notes

Horiz. Scale: 1 in. = 25 ft.
Vert. Scale: 1 in. = 1 in.

Note: Level notes are reduced to 0.4% grade

Fig. 25 Profilometer vs. Level notes

Dist IV Ala 69-E

ClibPDF - www.fastio.com

ClibPDF - www.fastio.com

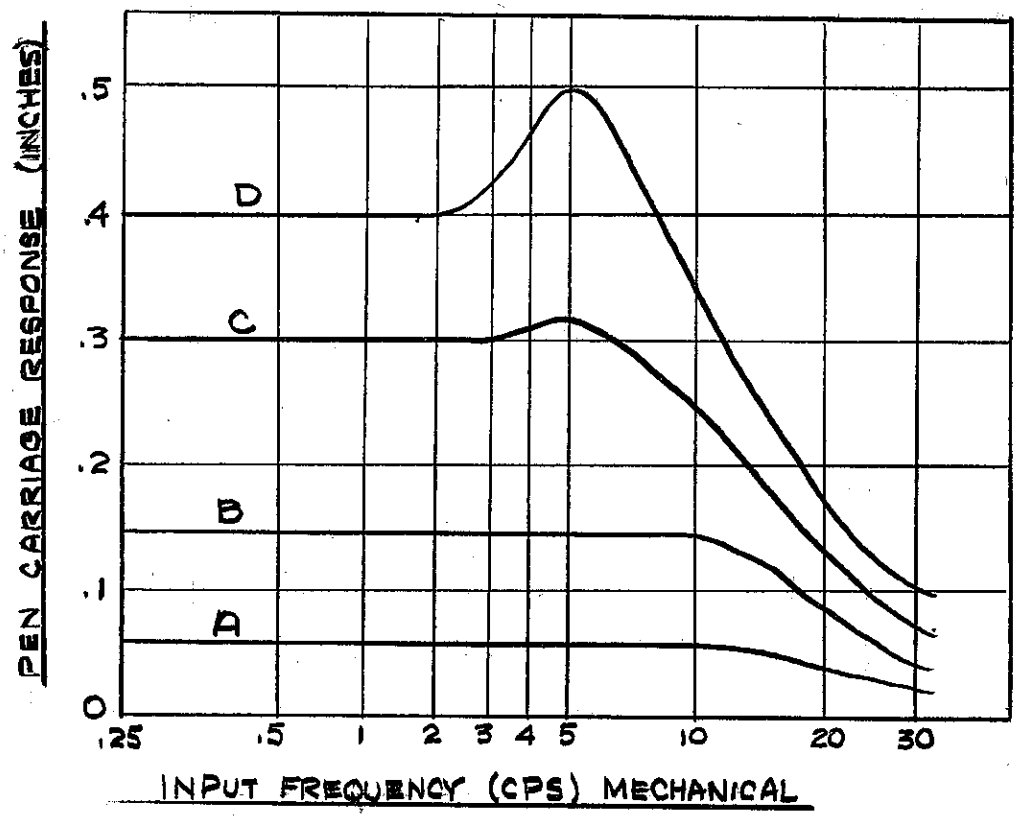

Fig. 26 Frequency Response of the Recorder Pen Carriage

This test was performed by mechanically actuating the recording wheel transducer sinosoidally at the following amplitudes: A, .06 inches; B, .15 inches; C, .30 inches; D, .40 inches.

Evidence of overshoot in the pen carriage (curves C and D) is typical of recorder response when recording heavily faulted pavement profiles. Reproduction of profilogram fig. 16 indicates that the presence of pen overshoot in recordings of this type of pavement is not objectionable.

ClibPDF - www.fastio.com

ClibPDF - www.fastio.com

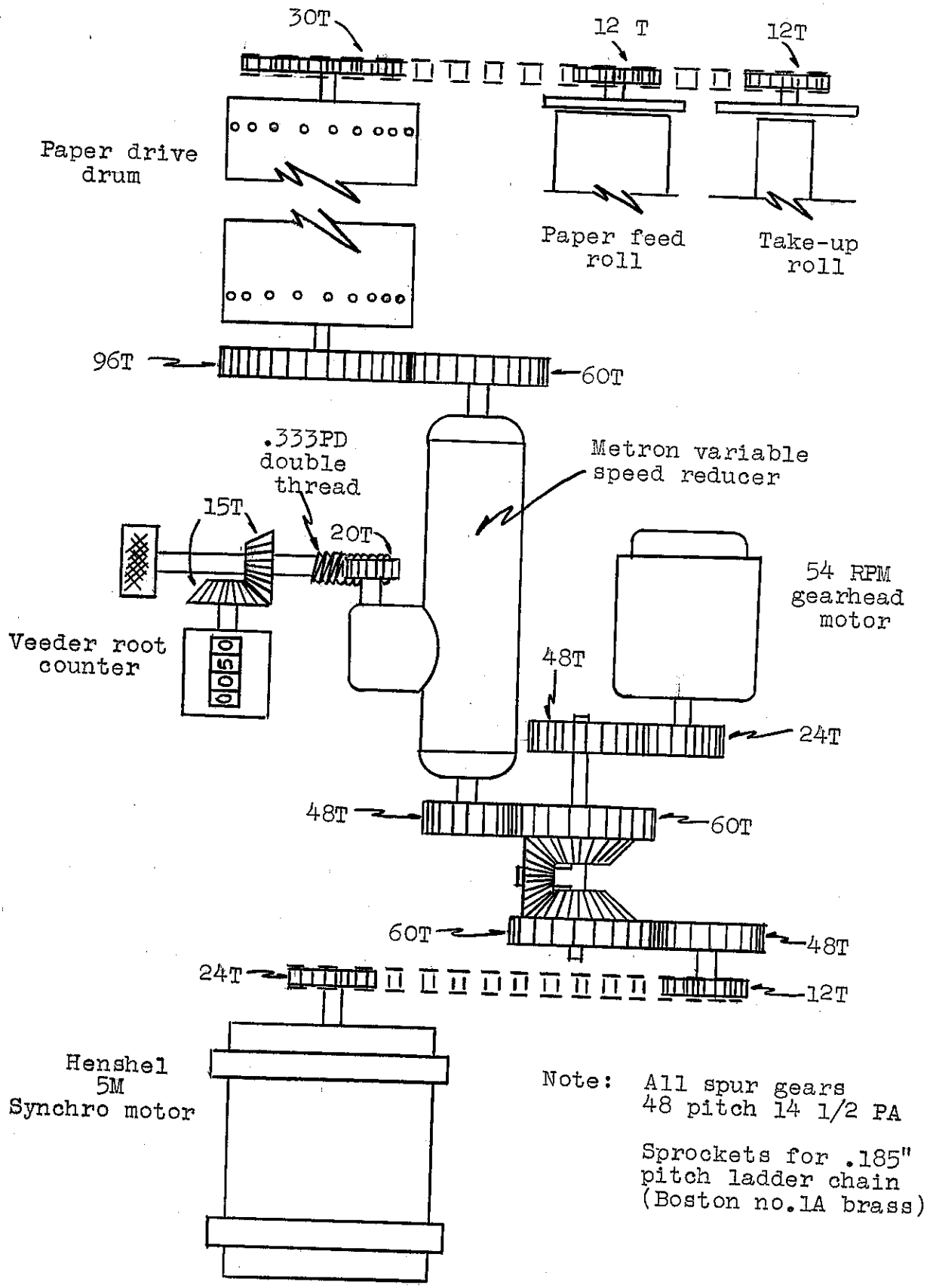

Fig. 27 Profilograph Recorder

Horizontal plot gear diagram

ClibPDF - www.fastio.com

ClibPDF - www.fastio.com

ClibPDF - www.fastio.com

DIMENSIONS IN INCHES

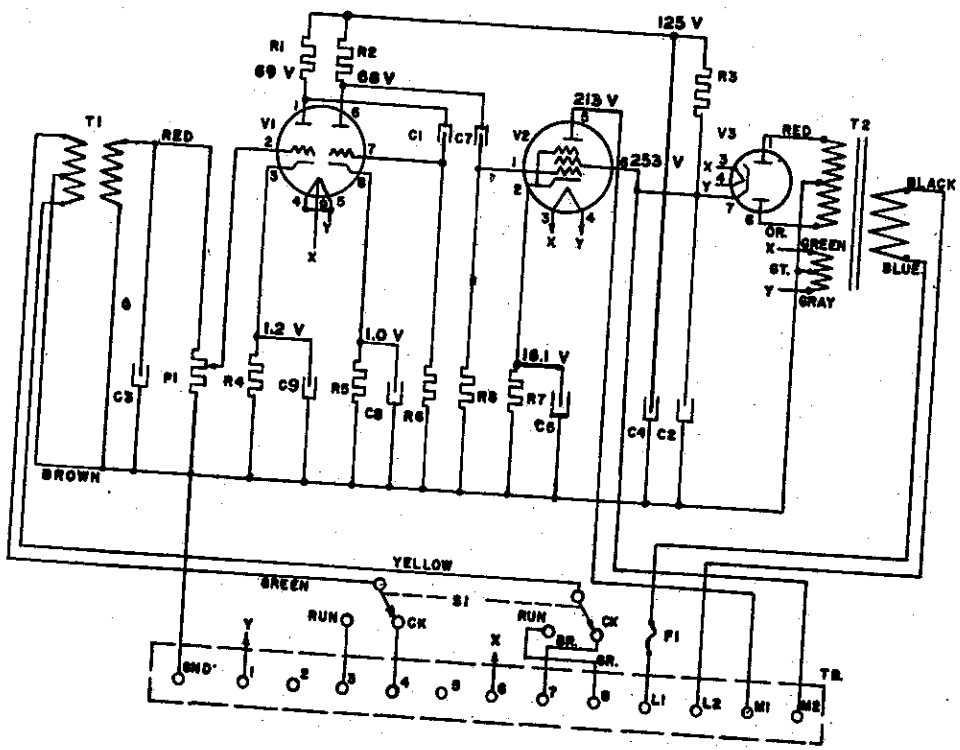

LIST OF MATERIALS

		QTY.
C1,C7	CONDENSERS, .05 MFD, 400V. — MALLORY PT415	2
C2,4, ,6	" , 20/15/20/20 MFD, 450/450/25/25, ELECTROLYTIC MALLORY — FP426	1
C3	CONDENSER, .01 MFD, 400 V, AEROVOX P-488	1
R1, R2, R8	RESISTORS, .47 MEG, 1/2 WATT — IRC TYPE BTS	3
R3	RESISTOR, .47 MEG, 1 WATT — IRC TYPE BTA	1
R4, R5	RESISTORS, 10,000 OHMS, 1 WATT — IRC TYPE BTA	2
R6	RESISTOR, 1 MEG, 1/2 WATT — IRC TYPE BTS	1
R7	RESISTOR, 500 OHMS, 10 WATTS, — IRC TYPE PW-10	1
P1	POT, .5 MEG — CENTRALAB MODEL "M" 1/8 SHAFT SLOT (CURVE 6)	1
S1	SWITCH, DPDT SLIDE, BACK CONNECTOR WIRT CO.	1
T1	TRANSFORMER, THORDARSON T52955A	1
T2	" , MAGNETIC WINDING WITH END BELLS — 70-47R	1
TB.	JONES TERMINAL BLOCK, 13-140-Y	1
V1	12AX7 TUBE	1
V2	6AQ5 "	1
V3	6X4 "	1
C8,9	CONDENSER — 25 MFD, 6V. — CORNELL DUBILIER BBR 25-6	2
F1	FUSE 3AG 3/4 AMP 250 VOLTS	1

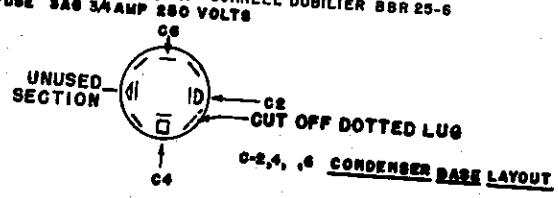

C-2,4, ,6 CONDENSER BASE LAYOUT

NOTES 1. SENSITIVITY ADJUSTMENT

TURN POT P1 TO EXTREME CLOCKWISE POSITION FOR HIGHEST GAIN IF UNIT OSCILLATES TURN POT COUNTER-CLOCKWISE UNTIL OSCILLATION STOPS.

2. VOLTAGE VALUES

TAKEN WITH 110 VOLT INPUT AND WITH A 59 R.P.M HOLTZER-CABOT MOTOR ON THE LOAD SIDE. 20,000 OHMS/VOLT METER READINGS MAY VARY 20 %

FIG.-5

FIGURE 28 ATCOTRAN AMPLIFIER ORIGINAL DIAGRAM

REVISIONS	
470 OHMS RESISTOR WAS TYPE BT-2	
1	GKQ 11-30-53
2	LFC 3-17-54
	MAG. WIND. THRU. WIRE
	AL.S. 5-26-54
3	LFC 5-26-54
	INTERCHANGED DESIGNATIONS OF C-6 & C-8, & CHANGED MALLORY 25V. TO C.D. 6V FOR C-8
	GKQ 9-1-54
4	LFC. 9-1-54
	C1, C7 WAS .047 MFD. C.D. PJ-4847
	GKQ 9-21-54
5	L.F.C. 9-27-54
	REMOVED C9 ADDED C9
	12-7-54 L.F.C.
6	12-9-54 B.A.C.
	REVISED R1, C3, P1
	5-17-55 R.J.J.
7	5-17-55 B.A.C.

S.A.O. 9-30 No. 377

G-2 G-1	MATERIAL OR PART NUMBER	DRAWING No.	GROUP	FINISH	DETAIL	DESCRIPTION

LIST OF MATERIAL

TOLERANCE (EXCEPT AS NOTED) DIMENSION	TOLERANCE	REFERENCE
.XX (2 PLACE DECIMAL)	± .010	MATERIAL
.XXX (3 PLACE DECIMAL)	± .005	FINISH
HOLES (DRILLED)	+ .003 − .000	PART
FRACTIONS	± 1/64	SCALE —

FINISH (MACHINED SURFACES)

f1 ROUGH TOOL	f5 DRILL
f2 FINE TOOL	f6 REAM
f3 GRIND	f7 FILE
f4 POLISH	f8 LAP

DRAWN GAS. 6-9-53
CHECKED JL.K 6-15-53
APPROVED

AUTOMATIC TEMPERATURE CONTROL CO., INC.
PHILADELPHIA, PENNA., U. S. A.

TITLE WIRING OF ATCOTRAN AMPLIFIER CLASS 6251-B

NEXT ASSEMBLY | ASSEMBLY PART | S. O.
SUPERSEDES | DRAWING NO. W-4170 -X-7
SUPERSEDED BY

ClibPDF - www.fastio.com

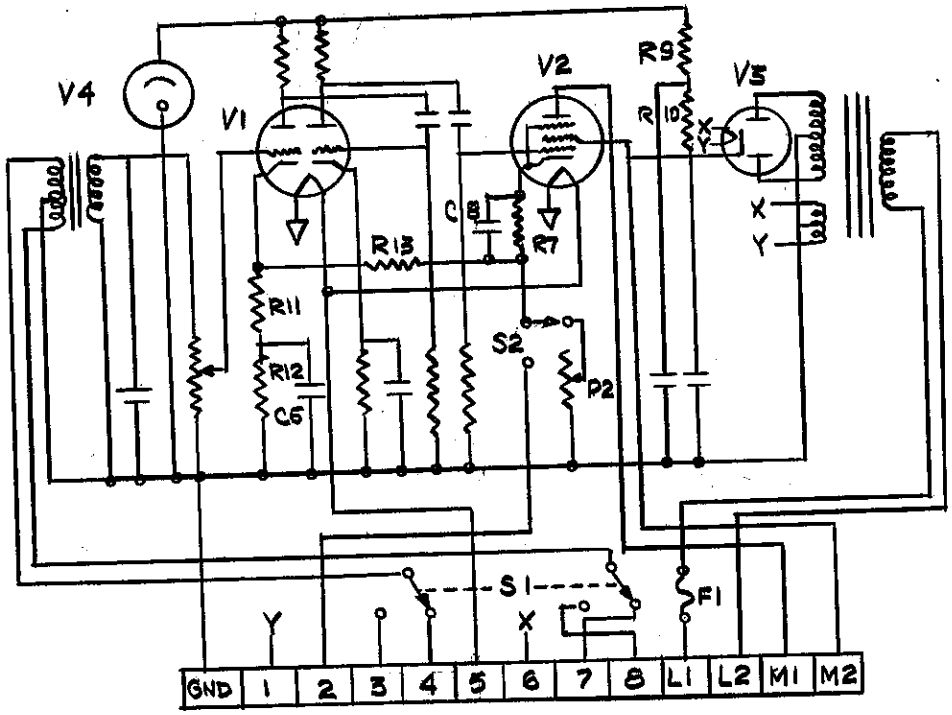

Fig. 29 Revised Wiring of Atcotran Amplifier 6251-B

All changes as noted; additional parts listed below:

R9-10	5000 10W
R11-12	2700 7W
R13	27K 1W
V2	12AQ5 (delete 6AQ5)
V4	OA2 150V VR
S2	Switch DPDT
P2	100 w/w

For other part numbers, refer to original wiring plan of class 6251-B unit (fig. 28). The above changes involve a constant voltage regulator tube and negative feedback to give greater stability to the output signal which controls the servo motor.

ClibPDF - www.fastio.com

ClibPDF - www.fastio.com

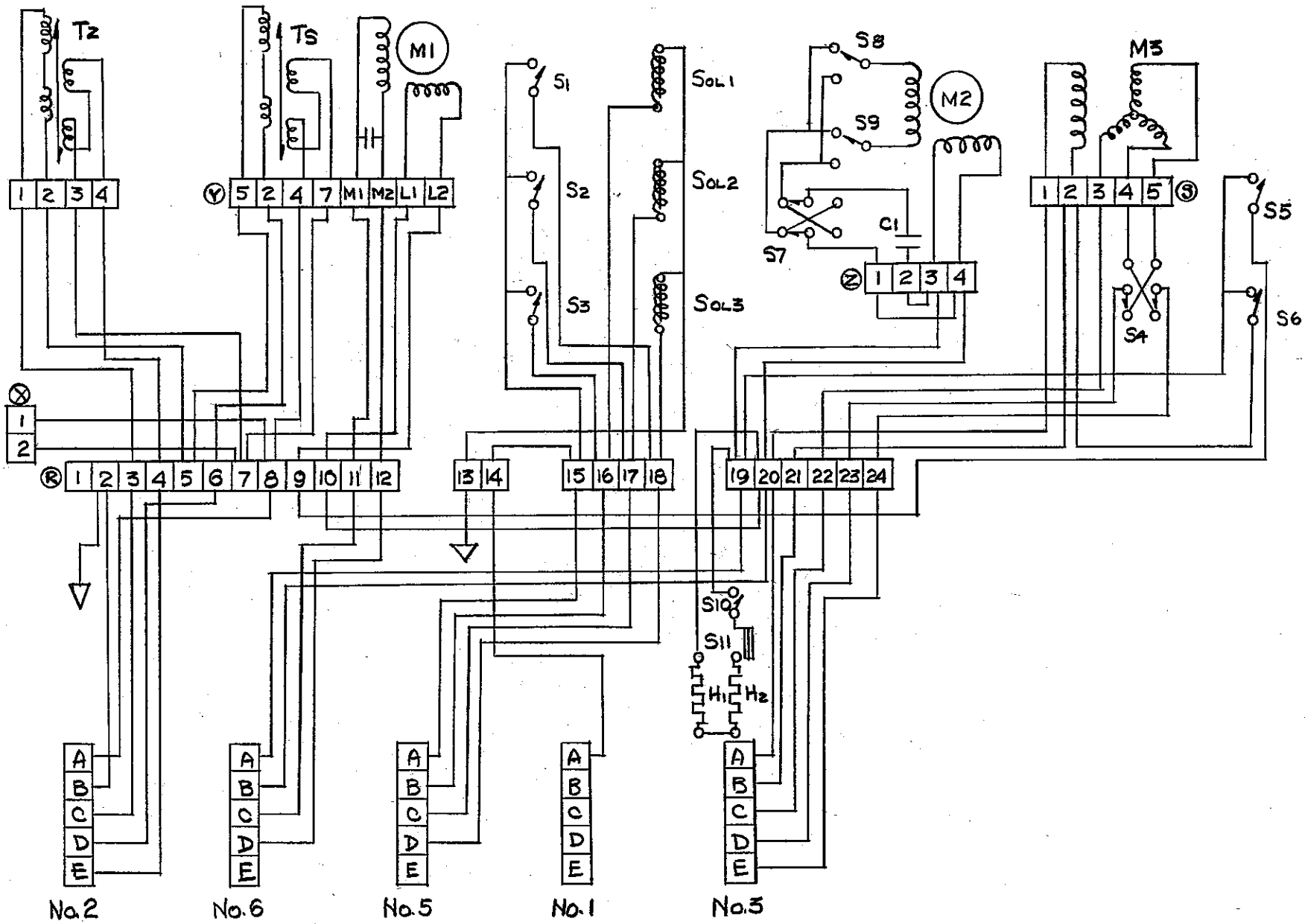

FIGURE 30A. PROFILOGRAPH RECORDER WIRING DIAGRAM

ClibPDF - www.fastio.com

ClibPDF - www.fastio.com

FIGURE 30B. RECORDER PARTS LIST

C1	.50 MF 250V Condenser
H1, 2	Space Heaters, 150W 115V
M1	Pen Drive Servo Motor MH 130 RPM
M2	Horizontal Plot Correction Motor, HC54 RPM
M3	Chart Drive Synchro Motor, Henschel M5
Sol 1	Joint Pen Solenoid, 12VDC, 1.5A
Sol 2	Reference No. Pen Solenoid, 12VDC, 1.5A
Sol 3	Crack Pen Solenoid, 12VDC, 1.5A
S1	Joint Solenoid Switch, SPST
S2	Reference No. Solenoid Switch SPST
S3	Crack Solenoid Switch SPST
S4	Horizontal Plot Direction Switch, DPDT
S5	Vertical Plot Control Switch, SPST
S6	Horizontal Plot Control Switch, SPST
S7	Horizontal Plot Correction Direction Switch, DPDT
S8	Horizontal Plot Advance Switch, SPDT
S9	Horizontal Plot Retard Switch, SPDT
S10	Heater Control Switch, SPST
S11	Heater Thermoswitch, SPST
Ts	Servo Balancing Differential Transformer
Tz	Zero set differential Transformer
Block R	Recorder Control Terminal Block
Block S	Synchro Junction Block
Block X	Vertical Scale Ratio Junction Block
Block Y	Atcotran Servo Terminal Block
Block Z	Horizontal Correction Junction Block

ClibPDF - www.fastio.com

ClibPDF - www.fastio.com

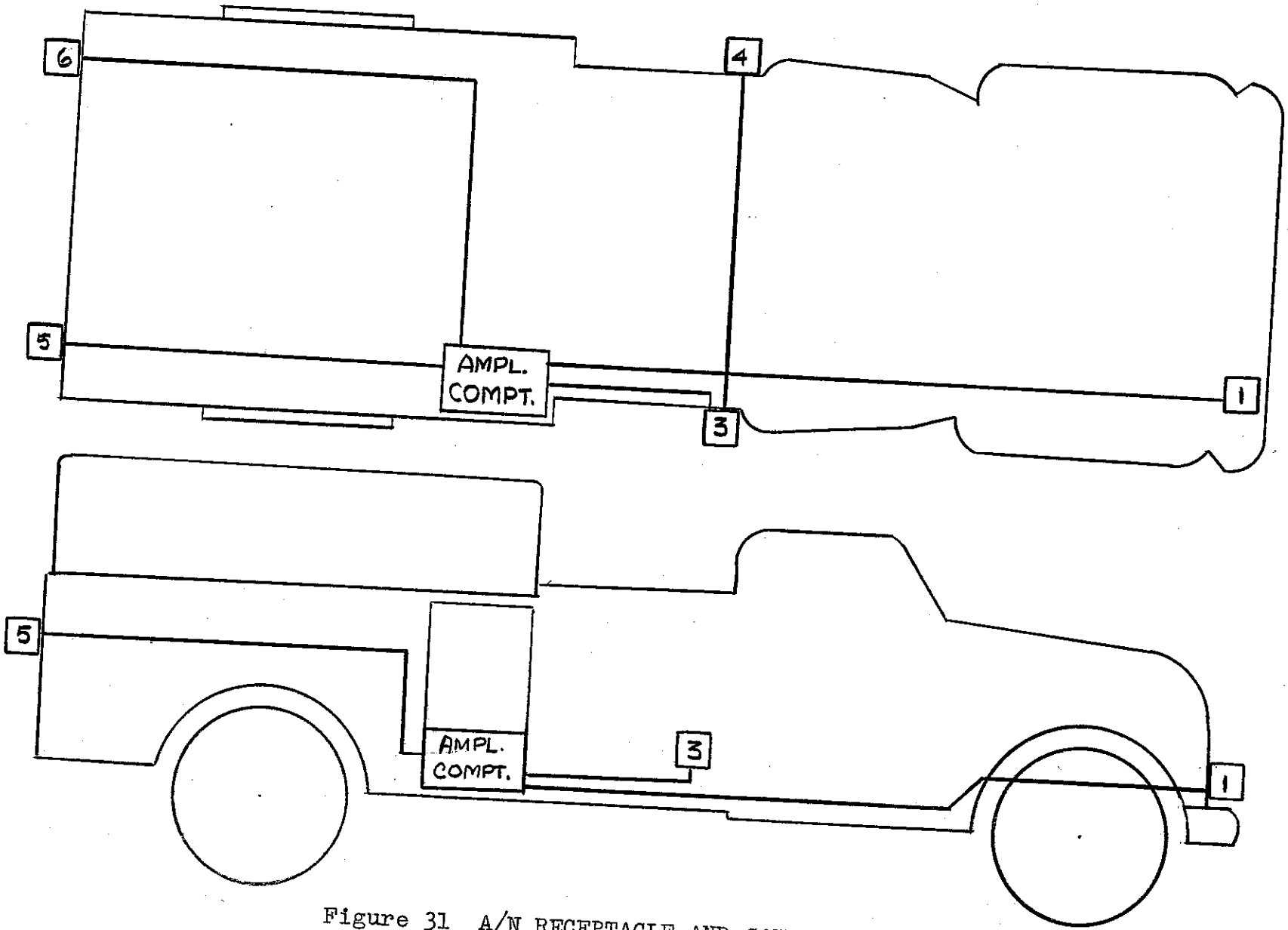

Figure 31 A/N RECEPTACLE AND CONDUIT LAYOUT

ClibPDF - www.fastio.com

ClibPDF - www.fastio.com

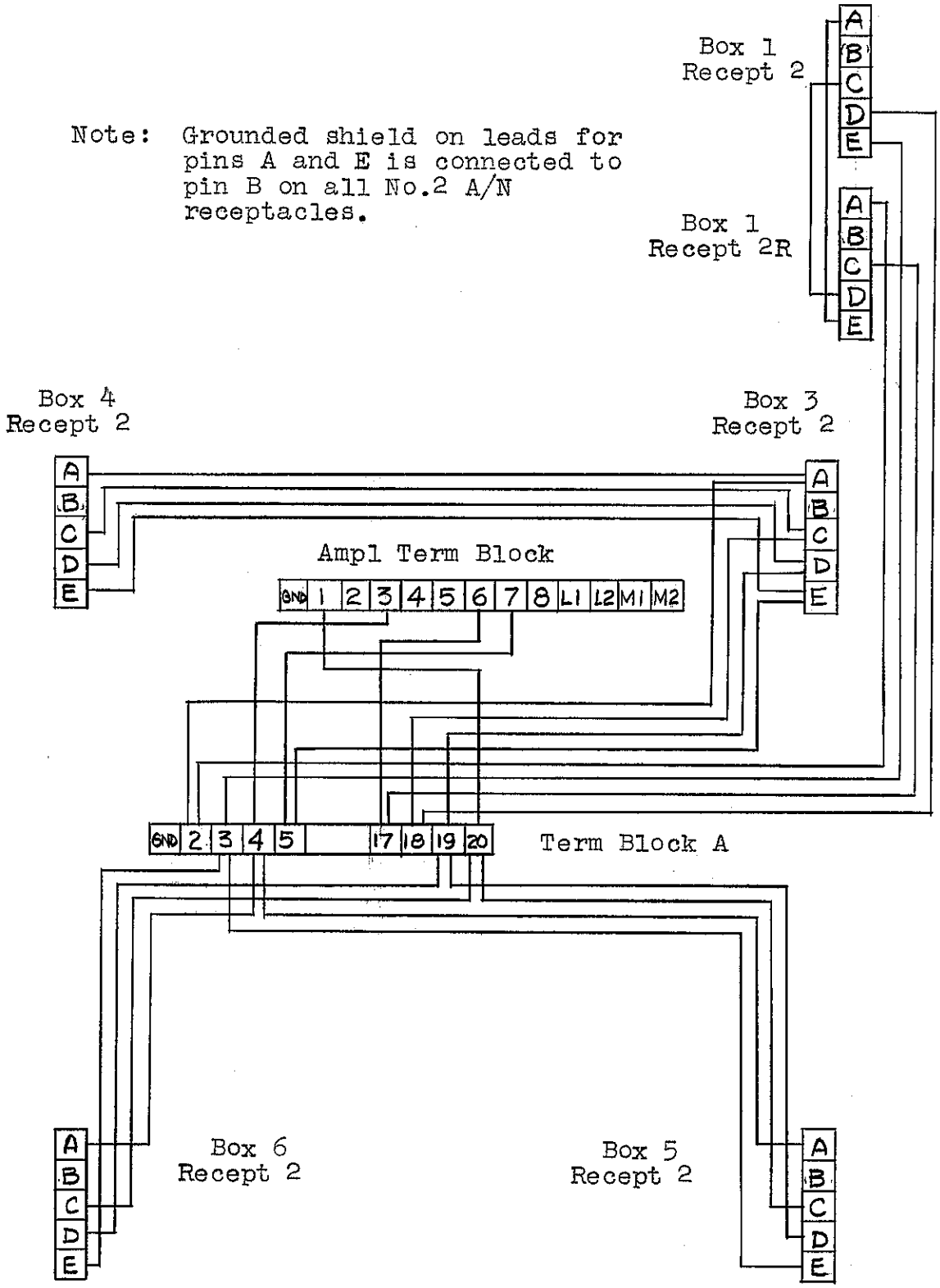

Fig 32 TRUCK WIRING DIFFERENTIAL TRANSFORMER CIRCUIT

ClibPDF - www.fastio.com

ClibPDF - www.fastio.com

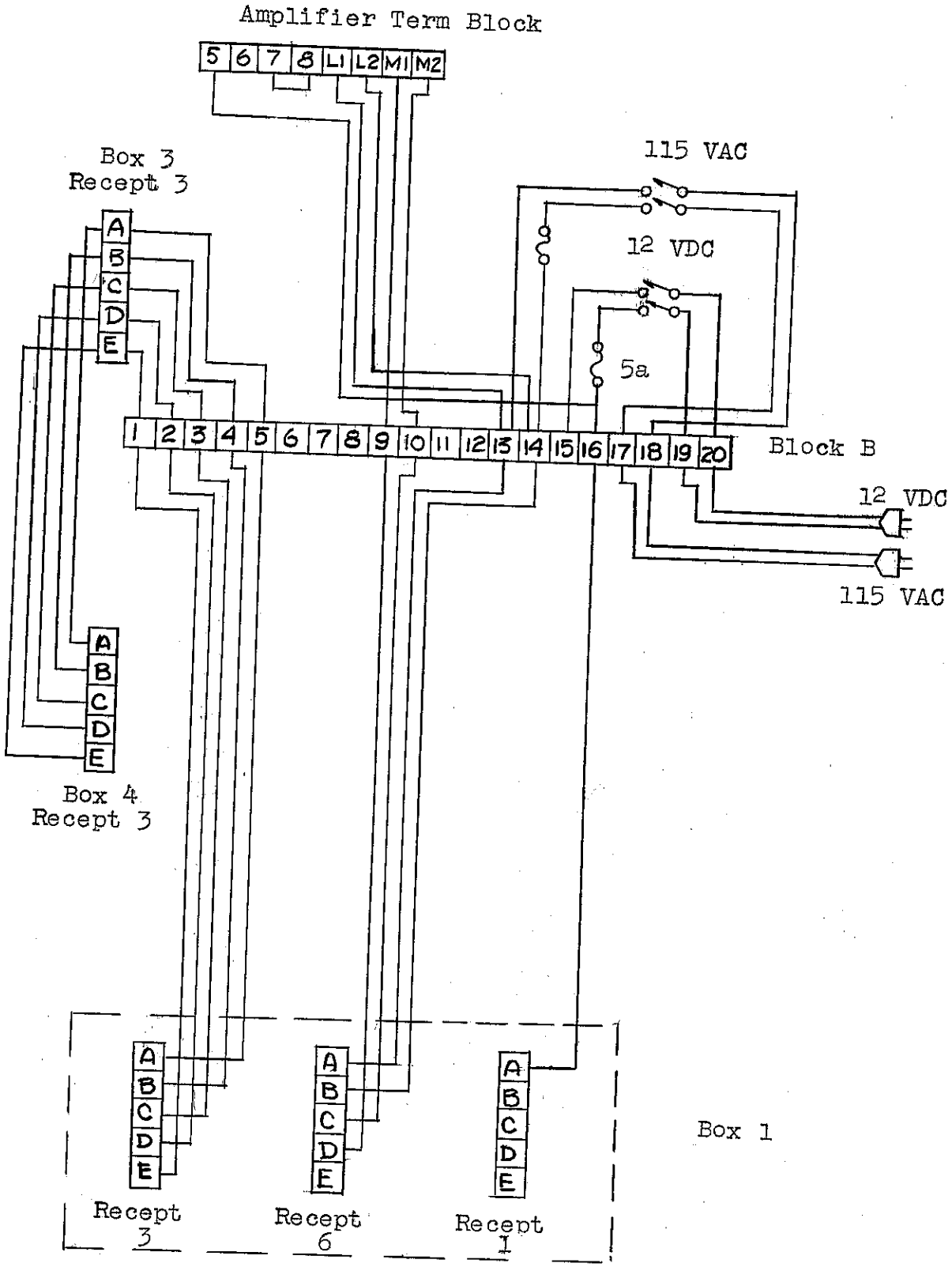

Fig. 33 TRUCK WIRING - SYNCHRO AND POWER DISTRIBUTION CIRCUITS

ClibPDF - www.fastio.com

ClibPDF - www.fastio.com

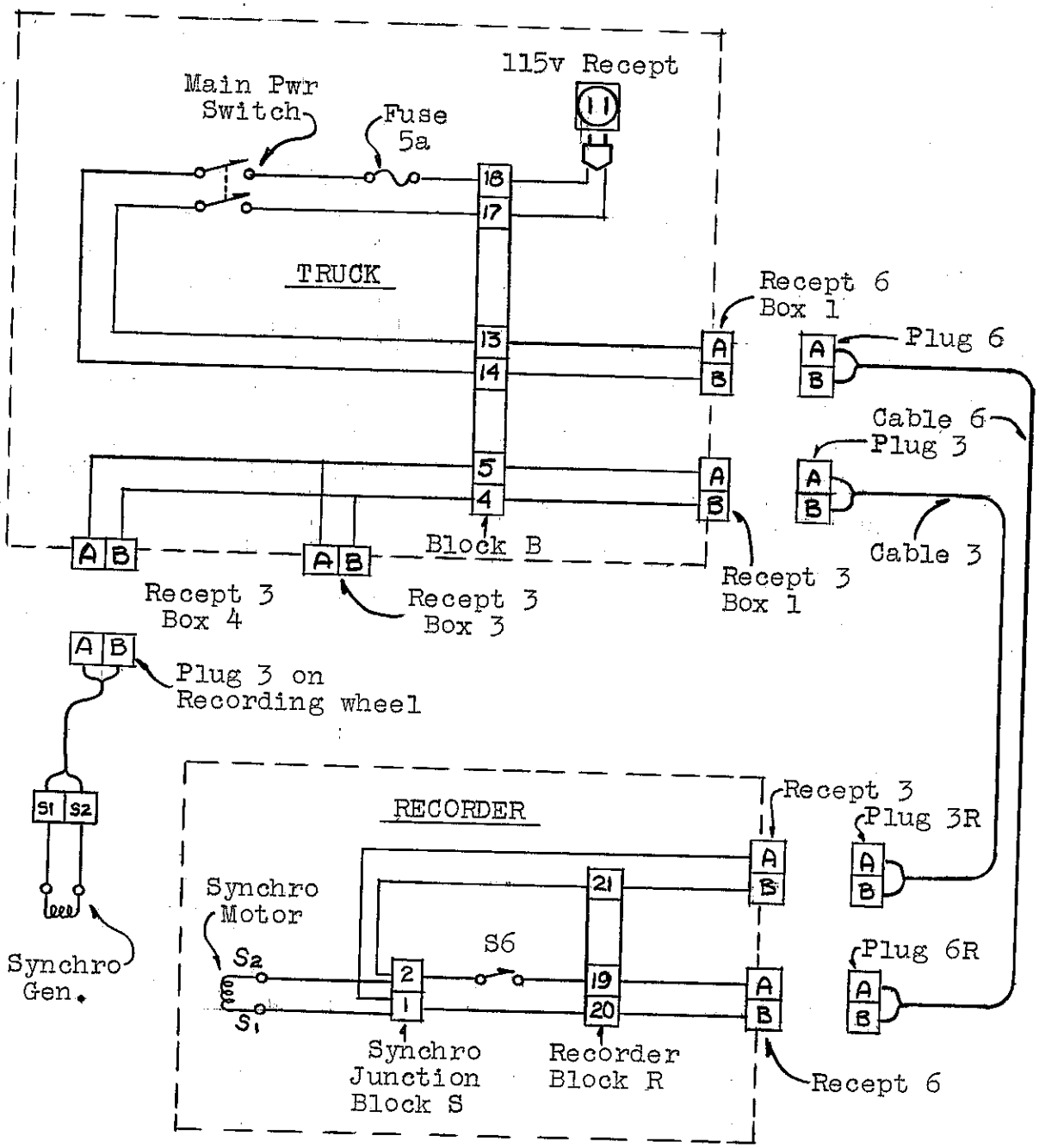

Fig. 34 A.C. SUPPLY TO RECORDER AND CHART DRIVE SYNCHRO STATOR CIRCUIT

ClibPDF - www.fastio.com

ClibPDF - www.fastio.com

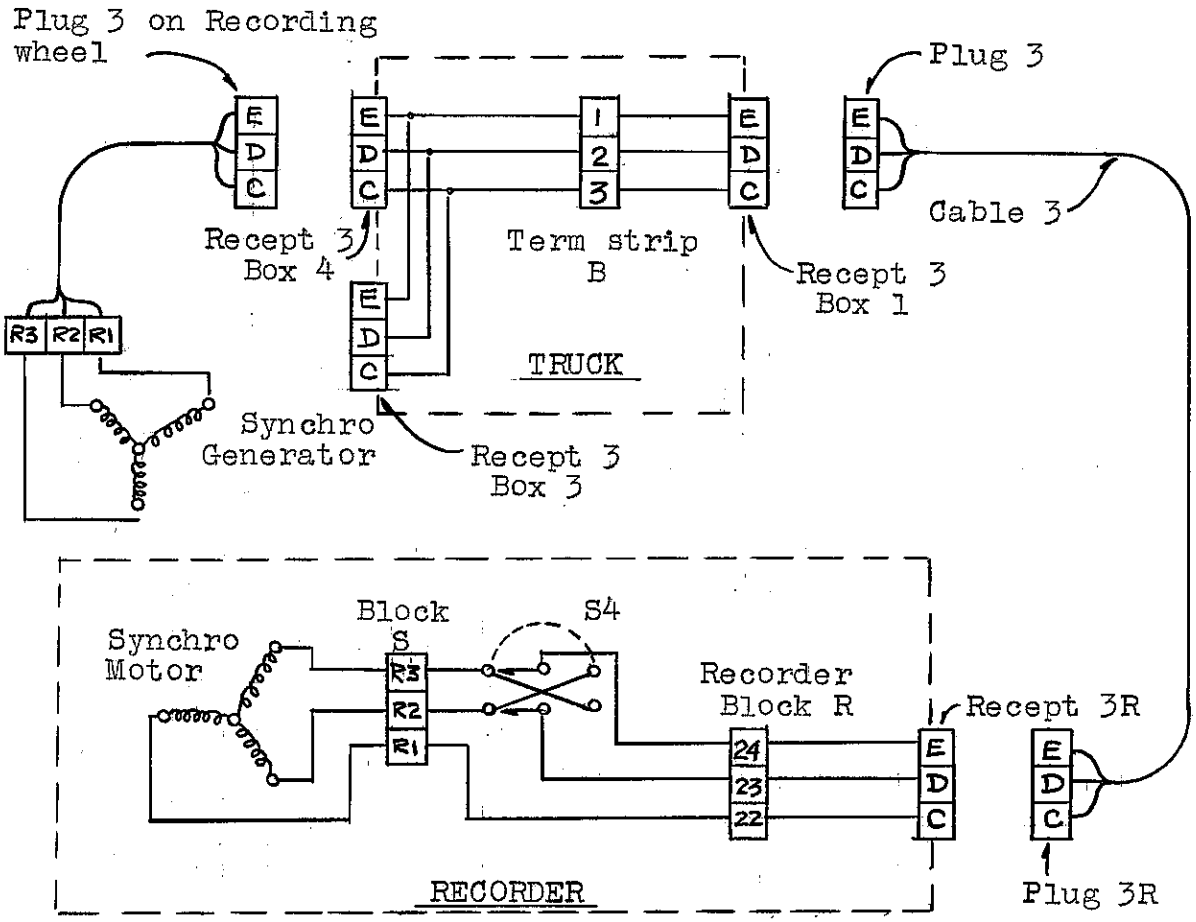

Fig. 35 CHART DRIVE SYNCHRO ROTOR CIRCUIT

ClibPDF - www.fastio.com

ClibPDF - www.fastio.com

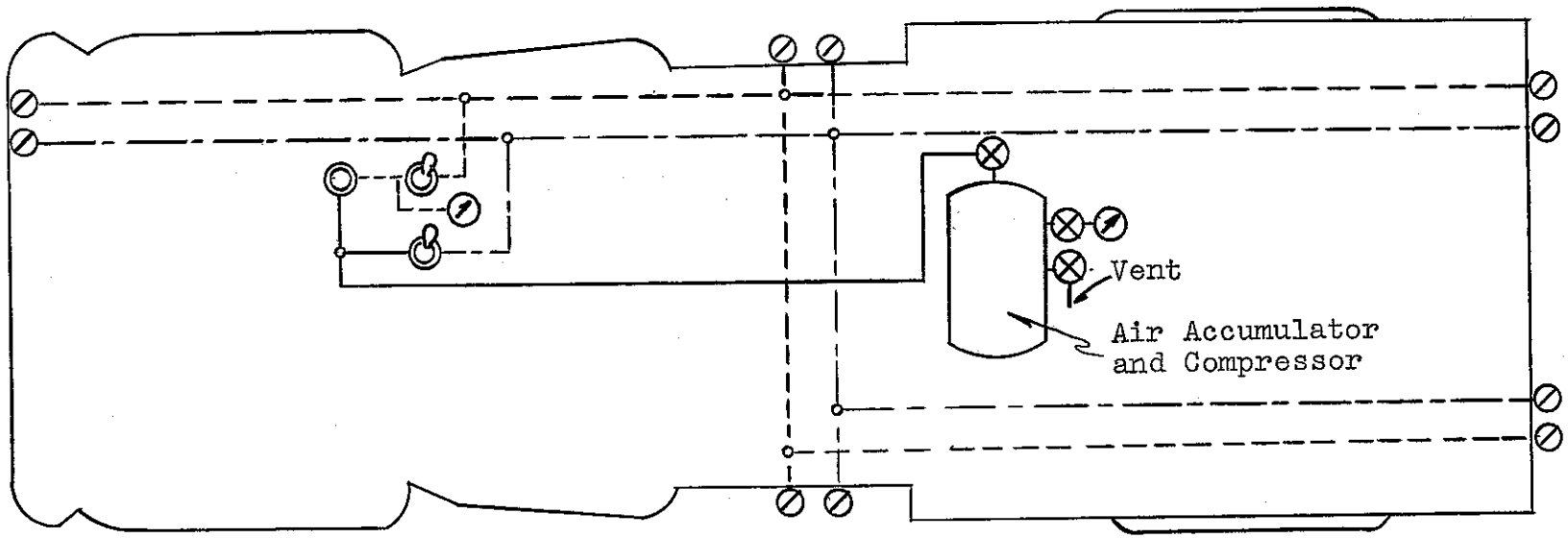

PNEUMATIC CONTROL LINE DIAGRAM

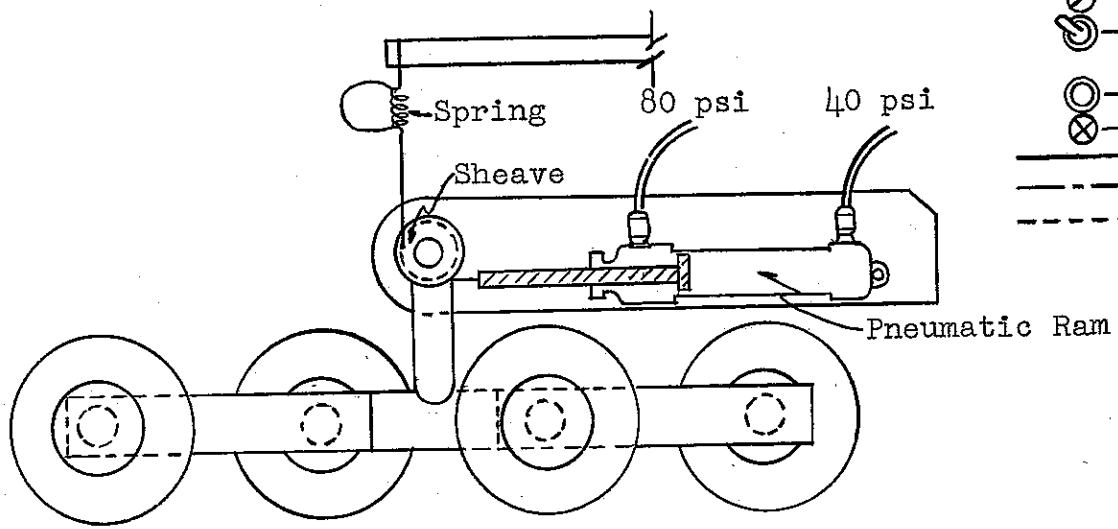

Detail of Pneumatic
Retracting System on
Front & Rear Reference Carriages

- Male Quick-Disconnect Fittings
- Hand operated air valve (3-way vent to atmosphere)
- Reduction valve
- Globe valve (1/8")
- 80 psi supply
- 80 psi retract wheels
- 40 psi lower wheels load recording wheel

Figure 36 PNEUMATIC CONTROL SYSTEM

ClibPDF - www.fastio.com

ClibPDF - www.fastio.com