DIVISION OF STRUCTURES AND ENGINEERING SERVICES
TRANSPORTATION LABORATORY
RESEARCH REPORT

Development of Test Methods and Specifications For Highway Traffic Control Devices

FINAL REPORT
CA-DOT-TL-6393-3-76-40
AUGUST 1976

76-40

Prepared in Cooperation with the U.S. Department of Transportation,
Federal Highway Administration

Caltrans
CALIFORNIA DEPARTMENT OF TRANSPORTATION

ClibPDF - www.fastio.com

ClibPDF - www.fastio.com

TECHNICAL REPORT STANDARD TITLE PAGE

1. REPORT NO.	2. GOVERNMENT ACCESSION NO.	3. RECIPIENT'S CATALOG NO.
CA-DOT-TL-6393-3-76-40		

4. TITLE AND SUBTITLE	5. REPORT DATE
DEVELOPMENT OF TEST METHODS AND SPECIFICATIONS FOR HIGHWAY TRAFFIC CONTROL DEVICES	August 1976
	6. PERFORMING ORGANIZATION CODE
7. AUTHOR(S)	8. PERFORMING ORGANIZATION REPORT NO.
W. H. Ames, R. L. Donner and K. S. Sedrakian	19103-636393
9. PERFORMING ORGANIZATION NAME AND ADDRESS	10. WORK UNIT NO.
Office of Transportation Laboratory California Department of Transportation Sacramento, California 95819	11. CONTRACT OR GRANT NO. C-1-9
12. SPONSORING AGENCY NAME AND ADDRESS	13. TYPE OF REPORT & PERIOD COVERED
California Department of Transportation Sacramento, California 95807	Final Report
	14. SPONSORING AGENCY CODE

15. SUPPLEMENTARY NOTES

This study was conducted in cooperation with the U. S. Department of Transportation, Federal Highway Administration.

16. ABSTRACT

This study was initiated to develop effective test methods and specifications which will allow full advantage of existing and new developed traffic control equipment. The study covers the following subjects, two of which were reported on previously, as noted:

1. A pulse type inductive loop sensor (Report published in 1969).
2. Mini-computers and traffic control (Report published in 1970).
3. Traffic control computer cabinet specifications.
4. Method of test for the powerline transient susceptibility.
5. Method of test for function and pre-installation on traffic signal system.
6. Method of test for vehicle detectors.
7. Effect of various switching devices.

17. KEY WORDS	18. DISTRIBUTION STATEMENT
Traffic controller, controller, traffic control computer, mini-computer vehicle detector, inductive loop detector, magnetic detector, magnetometer.	No restrictions. This document is available to the public through the National Technical Information Service, Springfield, VA 22161.

19. SECURITY CLASSIF. (OF THIS REPORT)	20. SECURITY CLASSIF. (OF THIS PAGE)	21. NO. OF PAGES	22. PRICE
Unclassified	Unclassified	74	

HMRT – 1242 (ORIG. 9/72)

ClibPDF - www.fastio.com

ClibPDF - www.fastio.com

STATE OF CALIFORNIA
DEPARTMENT OF TRANSPORTATION
DIVISION OF STRUCTURES & ENGINEERING SERVICES
OFFICE OF TRANSPORTATION LABORATORY

August 1976

TL No. 636393
Item No. C-1-9

Mr. C. E. Forbes
Chief Engineer

Dear Sir:

I have approved and now submit for your information this final research project report titled:

DEVELOPMENT OF TEST METHODS AND SPECIFICATIONS
FOR HIGHWAY TRAFFIC CONTROL DEVICES

Two reports were published previously on this project, both of which included findings or developments that have been implemented including a loop sensor for traffic detection and mini-computer application to localized traffic control. Developments reported herein have been implemented in the forms of: specifications for a mini-computerized traffic controller, three test methods for function and operation of traffic controller components and systems, and avoiding utilization of unsatisfactory switching devices.

Study made by . . . . . General Services Branch

Under the Supervision of . . . . . W. H. Ames, P. E.

Principal Investigator . . . . . R. L. Donner, P. E.

Co-Principal Investigator . . . . . K. S. Sedrakian, P. E.

Report Prepared by . . . . . K. S. Sedrakian, P. E.

Very truly yours,

George A. Hill

GEORGE A. HILL
Chief, Office of Transportation Laboratory

Attachment
KSS:bjs

ClibPDF - www.fastio.com

FOREWORD

This report is on a broad project, as the title implies, to do research and developmental work on test methods and specifications covering a broad spectrum of traffic control and appurtenent equipment and components. This final report culminates efforts in a number of areas as noted in the titles listed below. This will complete this project but in no way should be construed to mean there is no further work to be done in these areas. On the contrary, there is a continuing and evolving need to do more developmental work to take advantage of the rapidly changing state-of-the-art in electronics.

For example, much work needs to be done to find new and improved methods of vehicle detection including rapidity of detection and other parameters as well as just presence, if we are to take advantage of evloving mini-computer and micro-processor based controller capabilities. Efforts in this area have the potential for significant improvements in highway and street traffic operations from the standpoint of efficiency, safety, and public convenience.

Further work needs to be done in other areas on a continuing basis to take advantage of available technology, particularly in the electronics field, to get the most for the diminishing highway dollar.

Under this project the Transportation Laboratory in cooperation with the U. S. Department of Transportation, Federal Highway Administration, has previously published two interim reports, titled as follows:

1. "A Pulse Type Inductive Loop Sensor", dated 1969.
2. "Mini-Computers and Traffic Control", dated 1970.

ClibPDF - www.fastio.com

This final report covers research and developmental work in 5 separate areas, all of which are related to or are part of the traffic control system. Each area is covered by a brief discussion of the development and implementation of the test method or specification which follows. Included are the following:

I. Traffic Control Computer (TCC) Cabinet specifications.

II. Method of Test for the Power Line Transient Susceptibility.

III. Method of Test for Function and Pre-Installation Inspection on Traffic Signal Systems.

IV. Method of Test for Vehicle Detectors.

V. Effects of Various Switching Devices.

ClibPDF - www.fastio.com

ClibPDF - www.fastio.com

ACKNOWLEDGEMENTS

This research was accomplished in cooperation with the U. S. Department of Transportation, Federal Highway Administration, Item No. C-1-9.

The contents of this report reflect the views of the Transportation Laboratory which is responsible for the facts and the accuracy of the data presented herein. The contents do not necessarily reflect the official views or policies of the State of California or the Federal Highway Administration. This report does not constitute a standard, specification, or regulation.

The authors wich to express their appreciation for the able assistance provided by the following staff members of the Transportation Laboratory and the Office of Traffic in this project.

Harold P. Garfield Jerry R. Bloodgood Lawrence E. Welsh L. G. Kubel	Specifications for TCC Cabinet
Herb Puckett Elroy Davis	Construction of Sample TCC Cabinet
Leroy F. Peters	Controller Testing
James A. Sykes	Line Transient Data
Marvin Greenstein	Switching Device Testing
Robert L. Ogborn	Vehicle Detector Testing

ClibPDF - www.fastio.com

ClibPDF - www.fastio.com

TABLE OF CONTENTS

	Page
TRAFFIC CONTROL COMPUTER CABINET SPECIFICATIONS	1
METHOD OF TEST FOR THE POWER LINE TRANSIENT SUSCEPTIBILITY	43
METHOD OF TEST FOR FUNCTION AND PRE-INSTALLATION ON TRAFFIC SIGNAL SYSTEM	47
METHOD OF TEST FOR VEHICLE DETECTORS	56
EFFECT OF VARIOUS SWITCHING DEVICES	64

ClibPDF - www.fastio.com

ClibPDF - www.fastio.com

I. TRAFFIC CONTROL COMPUTER CABINET SPECIFICATIONS

Introduction

The use of Mini-computers for localized traffic control was shown to be feasible as reported in an Interim Report dated May, 1970 titled "Mini-Computers and Traffic Control". Caltrans traffic engineers were thus provided with a relatively simple method to experiment for optimization of traffic control. In order to assure uniformity of equipment, the Office of Traffic initiated the purchase of Traffic Control Computer (TCC) Cabinets to be State furnished to jobs. The Office of Traffic and the Transportation Laboratory jointly wrote the TCC Specifications, as included in this report.

Conclusions

1. The feasibility and economy of localized traffic control by mini-computer has been proven.

2. Mini-computer traffic controllers are much more versatile than conventional hard wired controllers, enabling the traffic engineer to readily optimize traffic flow at a given intersection and adapt to changing traffic patterns.

3. The initial cost of providing traffic control by mini-computer is generally equal or less than conventional controllers with the added bonus of significant monetary and convenience benefits to the motorist.

Implementation

1. A specification (copy included in this report) as been developed to purchase a standardized cabinet (Type 200 Controller

ClibPDF - www.fastio.com

Unit and Cabinet).

2. Caltrans has purchased over 100 Type 200 Controllers for State furnishing to contractors for installation on Caltrans construction contracts.

3. The first field installation was made in December of 1973. This controller and subsequent installations have been operating successfully with only minor maintenance problems.

4. Specifications including detailed drawings are available to local as well as other public agencies upon request.

Discussion

A field performance evaluation of TCC controllers is being conducted by Caltrans Office of Traffic. Although the evaluation is not completed, the TCC controller performance is generally satisfactory. Some problems have been experienced with the power supplies, detectors, and computers. The problems are apparently related to the manufacturers design and inadequate quality control and in some instances to field installation problems.

The TCC controllers are being used successfully for lane control of traffic on San Francisco-Oakland Bay Bridge, control of diamond interchanges, and the control of many complex intersections.

The cost of the TCC controllers is comparable to hard wired logic controllers. However, the TCC controllers are much more versatile than the hard wired logic controllers. If the control requirements of a given location change, the new control strategy may be accommodated with only a relatively simple program modification. On the other hand, hard wired logic controllers may and often do require extensive redesign and costly hardware modifications.

ClibPDF - www.fastio.com

The TCC controllers can readily be used by local agencies with significant benefits. Those agencies without computer programming capabilities can require the manufacturer to provide the program with the controllers or contract with Caltrans or other municipalities for assistance in design, implementation, and maintenance of their system.

ClibPDF - www.fastio.com

TCC CONTROLLER SPECIFICATIONS

SECTION 1

TYPE 200 CONTROLLER UNIT

TYPE 200 CONTROLLER UNITS.--Type 200 controller units, shall conform to these special provisions.

FUNCTION.--Each Type 200 controller unit shall operate various traffic signal devices, as specified and as shown on the plans, to provide signal indications as determined by an internally stored program and real time inputs.

EQUIPMENT.--The Type 200 controller unit shall consist of the following basic equipment:

Stored program computer, herein designated words of memory.

Program Loader
Real-time clock
Power failure protect
Power failure restart
Digital microcircuit interface, 128 bits in, 128 bits out

Interface for keyboard/reader/punch/printer

The Type 200 controller unit shall be equipped for mounting on the slides in the State standard Type 200 controller cabinet. The maximum dimensions shall be: depth - 24 inches (22 inches behind and 2 inches in front of mounting ears), height - 10 1/2 inches.

The Type 200 controller unit shall be provided with a solid cover designed to protect the electrical components against rain for short periods.

ClibPDF - www.fastio.com

The power cord shall be supplied with a NEMA Type L5 - 15P twist-lock plug.

All fuses shall be readily accessible from outside the unit and shall be replaceable without the use of tools.

Computer and interfaces shall pass Test Method No. Calif. 667 and shall operate under the following environmental conditions:

Temperature	0°C to 50°C
Humidity	0 - 90 percent, relative, at 40°C

Vibration - shall comply with MIL-STD-810A (USAF) Method 514.1 equipment class 6 (shipment by common carrier, (land, sea, or air) and equipment mounting method A (equipment rigidly mounted to supporting structure, without the use of vibration isolators).

Shock - shall comply with MIL-STD-810 (USAF) Method 516.1 procedure III (transit test for equipment transported by land, sea, or air).

Sixteen Type 200 Controller Units shall be provided with 4,096 words of basic memory and sixteen units with 8,192 words of basic memory. Delivery of the two basic memory size shall be as called out under Delivery Schedule.

PROGRAMMABLE DIGITAL COMPUTER.--Type 200 controller unit shall be an integrated circuit, stored program, parallel logic digital computer with the capability of multilevel indirect addressing.

The computer shall be synchronous logic and have a crystal controlled clock.

ClibPDF - www.fastio.com

The computer hardware organization and control logic shall enable the registers, arithmetic unit, communication buses, input/output (1.0), and memory to communicate with external equipment, as well as the arithmetic unit, I/O unit, and memory of the computer.

The computer shall have plug-in expandability for memory, input/output facility, peripheral equipment and special device interfaces. The computer shall contain all of the signal and data control lines which permit functional system elements to be connected to the central processing unit on a plug-in basis. The computer shall have a priority interrupt system for real time control.

A minimum of 2 working registers capable of logical and arithmetic manipulations shall be provided. Two or more index registers shall be provided.

The core memory shall be read-write expandable in 4,096-word blocks of 16-bit words, minimum. The core stack shall be a plug-in assembly interchangeable between any machine of the same model number. Specifying the sense, inhibit or select electronics that go with any particular core stack shall not be necessary.

The computer shall have at least 2 priority interrupts in addition to those used by the required options. Each interrupt shall allow an external device to cause immediate detour of the program to an interrupt processing routine when it has executed its current instruction. Program sensing of a line shall not be considered satisfaction of this interrupt requirement.

INTERNAL STORAGE.--The computer shall use directly addressable, coincident-current ferrite cores as the basic storage element. All bits of each word shall be injected, stored, and extracted in parallel. The memory shall have features to protect its contents

ClibPDF - www.fastio.com

during power turn-on and turn-off and shall not be affected by transients resulting from power switching and external load or unload conditions. The memory module shall be capable of being physically removed without the use of tools to permit its replacement in the field.

The complete machine cycle time of the memory shall be 2.0 microseconds or less.

The basic computer shall contain herein designated words of non-volatile random-access magnetic-core memory and shall be pre-wired for field expansion to 16,384 words of memory within the mainframe.

The capability of adding direct memory access as a field installable item shall exist in the mainframe.

CIRCUITRY.--Solid state circuitry shall be used throughout. Integrated circuits shall be general purpose digital logic and shall be rated for reliable operation throughout the operating temperature range of 0° to 7°C.

POWER FAIL - RESTART.--The power failure protect shall provide one priority interrupt and the power restart shall provide a separate priority interrupt. These shall be in addition to the interrupts standard to the computer. The power failure detect-shutdown shall allow no less than one millisecond of program execution time between power failure interrupt and memory lockout. The power fail detect circuit shall accept a 12 millisecond transient or power failure without causing a power fail interrupt.

When power is applied to the controller unit all the micro-circuit interface output bits shall go to the logical zero (positive voltage) state within 50 milliseconds. The power turn-on time of the controller unit shall be less than one second.

ClibPDF - www.fastio.com

Power turn-on time is the time elapsing after the power switch is turned ON until the computer is able to execute an instruction.

REAL TIME CLOCK.--A real time clock (RTC) shall be provided within the computer to determine the time of day for data logging purposes. It shall be possible by software to select one of the following RTC interrupt operating frequencies: 10 Hz, 100 Hz, 1000 Hz, or line frequency.

MICROCIRCUIT INTERFACE.--The microcircuit interface shall consist of 2 independent registers which allow a 2-way flow of information between the computer and external devices. Negative true (ground level) logic shall be provided.

The output microcircuit interface shall consist of a minimum of 128 bits of buffered storage register output to external devices such as solid state switching devices. The interface shall provide an open collector output capable of driving up to +30 volts D.C. and sinking up to 40 milliamperes.

The input microcircuit interface shall consist of a minimum of 128 bits of gated storage register inputs from external devices to permit transfer of data at DTL/TTL levels. Each input bit shall be a voltage of 0.0 to 0.7. Transfer of data between microcircuit interfaces and working registers ahll be in 16-bit word increments.

The input and output bits shall be wired to connectors as shown on the plans.

FRONT PANEL.--The following switches or indicators shall be furnished on the front panel:

ClibPDF - www.fastio.com

START SWITCH - Execute the instruction at the memory location identified by the data switches and begin normal operation.

PROGRAM LOAD - Load program tape into memory from the teletype tape reader or high speed tape reader. The object program tape shall be loaded into memory utilizing error checking by work count check-sum.

CONTINUE SWITCH - Execute the instruction at the memory location next in program sequence and bein normal operation.

RESET SWITCH - Stop at the end of the current cycle, clear all I/O device flags, clear interrupt on.

RUN LIGHT - Indicates when the computer is in normal operation with one instruction following another.

The panel shall be supplied with a 3-position keyed lock which turns off power or disables the operating switches when the processor is operating.

INSTRUCTION REPERTOIRE.--The following instructions shall be a part of the instruction set of the controller.

"ADD" - Adds the contents of a working register to another working register.

"AND" - Logically "ANDS" two of the working registers together.

"COM" - Takes the logical complement of a working register and stores the result in a register.

"HALT" - Stops the program.

ClibPDF - www.fastio.com

"INC" - Add one to a working register.

"ISZ" - Increments the contents of a memory location and skips the next instruction if the memory locations goes to zero.

"SUB" - Subtracts the contents of a working register from the contents of a working register.

INPUT/OUTPUT REQUIREMENTS.--Enough I/O slots or capability shall be provided in the mainframe for the slow speed paper tape oriented keyboard/reader/punch/printer (typer), real-time clock, power failure protect and power failure restart, microcircuit interfaces, and the additional microcircuit interfaces as required in these special provisions.

KEYBOARD/PRINTER/PUNCH/READER INTERFACE.--The interface or controller shall contain all necessary control and interrupt logic to effect the transfer of commands and data between the computer and the keyboard/printer/punch/reader. The interface shall operate with existing Department of Transportation keyboard/printer/punch/readers manufactured by Teletype Corp., Model 3320 3JA ASR.

HIGH-SPEED READER (HSR) INTERFACE.--The supplied computer shall accept a High Speed Reader Interface presently used by the State. The California Type 200 Controller Units presently in service are Data General Corp., NOVA 140 and 2/4.

PROGRAM LOAD.--A hardware loader which, when utilized, will result in an object program being loaded into memory. The hardware loader when used with the specified front panel shall accept object programs from both a teletype reader or a high speed tape reader.

ClibPDF - www.fastio.com

CONNECTORS.--Two microcircuit connectors (C1S and C2S), one teleprinter connector (C3S) and one high-speed reader (C4S) are to be furnished, wired and mounted on the computer chassis located to mate with the hardnesses in the Type 200 Controller Cabinet. The connectors shall be mounted in such a manner that all plugs may be inserted or removed with the computer mounted in the cabinet. Blocks for all connectors shall be constructed of diallyl phthalate or better material. Contacts shall be secured in the blocks with springs of stainless steel. Contacts shall be beryllium copper construction, sub-plated with 0.00005-inch nickel and plated with 0.00003-inch gold. Sockets shall accept pin contacts 0.062-inch in diameter.

Connectors C1S and C2S shall contain 104 socket contacts, shall have a threaded receptacle for a center fastener and shall conform to the diagram shown on the plans. Corner guide pin assemblies for connectors C1S and C2S shall be stainless steel and shall be 1.097 inches in length. Corner guide socket assemblies shall be stainless steel and shall be 0.625-inch in length.

Connectors C3S and C4S shall contain 14 contact socket positions and shall mate with existing plug connectors C3P and C4P, respectively. Existing C3P and C4P are AMP #201355-3 pin blocks with AMP #201921-1 locking springs. Existing C3P has a center guide socket near contact pin A, and a center guide pin near contact pin P. Existing C4P has a center guide pin near contact pin A, and a center guide socket near contact pin P.

ClibPDF - www.fastio.com

C3S and C4S have the following pin assignments:

Pin #	C3S	C4S
A	+V mem	Input channel 1
B	TTY out	Input channel 2
C	Rdr run	Input channel 3
D	+5 VDC	Input channel 4
E	TTY in	Input channel 5
F	-5 VDC	Input channel 6
H	plugged	Input channel 7
J	Not connected	Input channel 8
K	Not connected	Sprocket
L	Not connected	Forward
M	Not connected	Run status
N	Not connected	Ground
P	Not connected	Not connected
R	Not connected	Plugged

COMPATIBILITY.--The computer with connectors and installed interface shall be compatible with existing peripheral equipment including the following:

Teleprinter
Type 200 controller cabinet
High-speed reader

The existing peripheral equipment operates with computers manufactured by Data General Corporation, Southboro, MA.

The supplied computer shall also be compatible with existing State computer programs. Compatibility means existing State object tapes will be loaded into the supplied computer. The program results shall be identical with the results obtained when an

ClibPDF - www.fastio.com

existing State computer manufactured by Data General Corporation is loaded with the same object tape and shall utilize no additional memory locations.

PRINTED CIRCUIT BOARDS

Each printed circuit board shall have the following minimum quality requirements: NEMA Grade G-10 glass cloth base epoxy resin board, 1/16 inch minimum thickness, organic solder masking and gold-plated contacts. Intercomponent wiring shall be copper track, with a minimum weight of 2 ounces per square foot, with adequate cross section for current to be carried. Printed circuit design shall be such that components may be removed and replaced without permanent damage to board or tracks.

Holes which carry connections between one side of the board to the other shall be completely plated through.

SERVICE.--The computer supplier shall have a warranty deposit in California providing an inventory of parts, both at an item level and at a component level. This depot shall also have facilities capable of simulating, for test purposes, the temperature conditions in which the operational computer will be functioning.

SOFTWARE.--Two sets of software tapes and operating instructions shall be included with athe Shipment A. The software supplied shall be usable in the controller units as furnished. The software furnished shall include the following programs.

SYMBOLIC ASSEMBLER.--An absolute assembler shall be a 2-pass assembler accepting a symbolic input and producing an absolute binary output or an assembly listing or both. Psuedo commands shall be available to alter the program origin, change the current number radix, and define new operation codes. Source input shall

ClibPDF - www.fastio.com

be free-form using special characters to delimit labels and comments. All memory locations not utilized by the assembler proper shall be used for symbol table storage.

PROGRAMMER DEBUGGER.--The debug program shall allow simultaneous activation of up to 4 breakpoints for software debugging. No restriction shall be applied to its placement or use. The debug program shall interface with any type of routine, including those using interrupt hardware. Commands shall be provided for examining, searching, and altering memory, as well as punching ranges of memory in absolute binary format.

REAL TIME OPERATING SYSTEM.--A real time operating system shall provide a modular interface to programs operating in a real time environment. This system shall have the ability to handle multi-tasking, time-slicing and I/O transfers. The real time operating system shall have the ability to dynamically alter execution priorities. This system shall support all standard peripheral devices supplied under this contract.

EDITOR.--An editor shall enable editing of paper tape input to produce updated paper tape output. This routine shall execute simple command strings input using the teletype to modify text on either a character or a line basis. The editor shall allow definition of command strings in a psuedo "macro" register. The command string shall then be capable of repeated execution by specification of the "macro" register name in subsequent command strings.

ClibPDF - www.fastio.com

MAINTENANCE DIAGNOSTICS.--A modular maintenance diagnostic package shall be furnished including the following:

Internal Logic Test
Memory Checkerboard
Processor Exerciser
Power Shut-Down Test
Instruction Timer
Address Test
Teletype Test
Arithmetic Test
Real Time Clock Test
High Speed Reader/Punch Test
Microcircuit Interface Test with Required Connectors

MAINTENANCE MANUAL.--A Maintenance Manual shall be included with each computer when delivered for testing. The Maintenance Manual shall include, but need not be limited to, the following items:

a. Specifications
b. Design characteristics
c. General operation theory
d. Function of all controls
e. Detailed circuit analysis
f. Trouble shooting procedure (diagnostic routine)
g. Voltage charts with wave forms
h. Block circuit diagram
i. Geographical layout of components
j. Schematic diagrams
k. List of replaceable component parts with stock numbers

ClibPDF - www.fastio.com

TCC CONTROLLER SPECIFICATIONS

SECTION 2

TYPE 200 CONTROLLER CABINET

The California Type 200 Controller Cabinet shall conform to these provisions and the attached plan sheets.

GENERAL.--The controller cabinet shall be furnished complete with all equipment specified in this section including but not limited to the following:

2 - Detector Racks
1 - Display Panel
1 - Environmental Control Unit
2 - Flashers
1 - Flash Relay
4 - Flash Transfer Relays
1 - Load Rack
1 - Monitor Unit
1 - Power Distribution Panel
1 - Power Supply
12 - Switching Devices

All of the above listed equipment shall be readily removable using common hand tools.

All equipment supplied with the cabinet shall provide reliable service under conditions of continuous operation over an ambient temperature range of -7°C to 55°C.

All equipment utilizing line voltage shall operate satisfactorily within the following ranges:

Line voltage	115 volts AC ±10 percent
Line frequency	60 Hertz ±0.5 Hz

ClibPDF - www.fastio.com

A name and serial number tag containing all manufacturer's information shall be fastened to or be part of all printed circuit boards.

All fuses, circuit breakers, switches, and indicators shall be readily visible and accessible when the front door is open. The controller cabinet with all equipment, including the controller unit, installled and operating shall be unaffected by transient voltages when tested in accordance with Test Method No. Calif. 667B.

Printed circuit board requirements shall be as described in Section 2 of these provisions.

All equipment furnished in the cabinet shall be clearly and permanently labeled. Marker strips on the vehicle detector racks and the load racks shall be part of and be located immediately below the subject module. The strips shall be made of material that can be legibly written on with pencil or ball point pen.

INTERCHANGEABILITY.--It shall be possible to electrically and mechanically interchange any of the following devices with the corresponding device in the California Type 200 controller cabinet, a sample of which is located at:

Office of Transportation Laboratory
5900 Folsom Boulevard
Sacramento, California 95819

The devices shall include but not be limited to the following:

Controller Unit
Monitor Unit
Display Panel
Flasher Transfer Relay
Power Supply
Switching Devices

ClibPDF - www.fastio.com

CIRCUIT BREAKER.--Circuit breakers shall be approved and listed by UL. The trip and frame size shall be plainly marked. All circuit breakers shall be quick-made, quick-break on either manual or automatic operation. Contracts shall be silver alloy enclosed in an arc quenching chamber. Overload tripping shall not be influenced by an ambient temperature range of from -18°C +70°C. Minimum interrupting capacity shall be 5,000 amperes, RMS, except the circuit breaker in the flash control circuit.

The police panel "LIGHTS" circuit breaker shall be non-automatic trip with contacts rated for 50 amperes at 125 volts AC.

CONDUCTORS.--Conductors in the controller cabinet between the service terminals and the signal bus and flash bus circuit breakers including the signal light neutral shall be No. 8 AWG or larger. All other conductors in the line voltage circuits shall be No. 14 AWG, minimum except circuits carrying less than 0.25 amperes.

All conductors used in controller cabinet wiring shall be No. 22, or larger, with a minimum of 19 strands. Conductors shall conform to Military Specification: MIL-W-16878D, Type B or D. The insulation shall have a minimum thickness of 10 mils and shall be nylon jacketed polyvinyl chloride or shall be irradiated cross-link polyvinyl chloride, polyhalocarbon or polychloro-alkene, except that, at the Contractor's option, conductors No. 14 and larger may be UL Type THHN.

The loop detector lead-in, from the field terminals in the cabinet to the sensor unit rack connector shall be a cable containing two No. 22, or larger, conductors, with each conductor insulated with either (1) a minimum of 10 mils of polyvinylchloride and 2 mils of mylon, or (2) a minimum of 14 mils of polyethylene or polypropylene. The conductor shall be twisted and the twisted pair shall be protected with a shield. The shield or a stranded tinned

ClibPDF - www.fastio.com

copper drain wire shall be grounded at only one end of the cable. The cable shall be provided with a polyethylene or polyvinylchloride outer jacket with a minimum thickness of 20 mils, or with a chrome vinyl outer jacket with a minimum thickness of 25 mils.

All conductors, except those which can be readily traced, shall be labeled. Labels attached to one end of the conductor shall identify the destination of the other end of the conductor.

All conductors used in controller cabinet wiring shall conform to the following color-code requirements:

A. The grounded conductor of AC circuits shall be identified by a continuous white or natural gray color.

B. The equipment grounding conductor shall be identified by a continuous white color with one or more green stripes.

C. The undergrounded conductors shall be identified by any solid color not specified in (A) or (B) above.

CONNECTORS.--All connectors shall be keyed to prevent accidental insertion of the wrong connector or printed circuit card.

Printed circuit card edge connectors shall have bifurcated, beryllium copper, gold-plated contacts on 0.156-inch centers.

All pin and socket connectors furnished with the cabinet shall utilize the same contact insertion tool, contact extraction tool and contact crimping tool.

Conenctors C1P and C2P shall intermate respectively with connectors C1S and C2S mounted on the controller unit chassis.

ClibPDF - www.fastio.com

Blocks for all pin and socket connectors shall be constructed of diallyl phthalate or better material. Contracts shall be secured in the blocks with springs of stainless steel.

Protection from accidental bending shall be provided for pin contacts by hoods or other approved means.

All cable connectors shall have cable hoods or shields and strain relief clamps.

Pin and socket contacts shall be beryllium copper construction subplated with 0.00005-inch nickel and plated with 0.00003-inch gold. Pin diameter shall be 0.062-inch.

Connectors C1P, C2P, C5P and C6P shall contain 104 contacts, shall have a "T" handle center fastener and shall intermate with the connectors shown on the plans.

Corner guide pins for connectors C1P, C2P, C5P and C6P shall be stainless steel and shall be 1.097 inches in length. Corner guide socket assemblies shall be stainless steel and shall be 0.625-inch in length.

DETECTOR RACK.--Each detector rack shall utilize 5.25 inch of rack-mounting height. The detector rack shall be capable of housing 14 detector modules described elsewhere in these specifications.

The detector rack, shall provide card guides (top and bottom) and a 22-pin edge-connector centered vertically for each detector. The detector rack shall allow air circulation through the top, bottom and rear of the detector rack.

ClibPDF - www.fastio.com

Four pins (4, 5, 8, 9) on each detector module edge connector shall be wired to 4 respective field terminals to provide for 2 loop detector channels or one magnetometer channel.

Loops 1 and 2 output collectors and emitters (pins 6, 7, 19 and 20) for each slot shall terminate on a terminal block mounted on the rear of the detector rack and shall connect to the proper controller unit inputs in the connector CIP wiring harness.

The detector rack shall be wired as shown on the plans.

The edge connectors shall be double sided connectors with the numbered side of each pin shorted to its respective lettered side internally.

Common grounding of the output circuit emitters is acceptable provided isolation can be obtained on at least three of the output circuits. Trace cutting is an acceptable means of obtaining isolation.

DISPLAY PANEL.--A swing-out display panel hinged on the right side as shown on the plans shall be furnished with the controller cabinet. The panel shall be plug-connected and removable from the cabinet using only a screwdriver. The display panel shall occupy 10 1/2 inches of EIA rack space.

All input and output circuits shall be compatible with the respective output and input circuits described in "MICROCIRCUIT INTERFACE" elsewhere in these specifications.

The watchdog timer and the isolation board shall be included with the display panel.

ClibPDF - www.fastio.com

The lamps that indicate the condition of the solid-state switching device inputs shall be driven by the computer output through lamp drivers. The flasher indicator shall be driven by the solid-state flasher. All other indicators may be driven directly by the computer outputs, if the lamp ratings are within the interface ratings.

The RECALL-TEST, AUX, SPARE AND STOPTIME switches shall be single-pole, double-throw, 3-position switches with one momentary and one maintained ON position. The contacts shall be either silver or coin silver with gold over nickel plate rated for 5 amperes at 115 volts A.C.

Both positions for the SPARE, AUX AND STOPTIME switches shall be connected to the same controller unit input. For the RECALL-TEST switches the maintained contacts shall be connected to the appropriate recall input. The momentary contact shall be connected in parallel with an appropriate detector sensor output (A1 to 1, A2 to 2, B1 to 3, B2 to 4, C1 to 5, C2 to 5, D1 to 7, W to 9, X to 10, Y to 11, and Z to 12).

The DIGIT CHANGE switches shall be single circuit momentary contact pushbutton switches. The contacts shall be either silver rated for 5 amperes at 115 volts A.C. or gold contact surfaces on copper alloy terminals rated for 1 ampere at 120 VAC-28VDC (mechanical life of 100,000 make and break cycles minimum).

The VARIABLE SELECT switch shall be a 16-position binary coded hexadecimal (BCH) thumbwheel switch. The legend shall be labeled 0 through 15. Contacts shall be gold alloy conforming to Military Specification: MIL-E-14566.

The LOAD TIME switch shall be a single-pole, double-throw toggle switch. The contacts shall be rated for a minimum of 40,000 make-break cycles before failure when operated in logic circuits. The LOAD TIME switch shall be provided with a locking mechanism guard to prevent accidental actuation.

ClibPDF - www.fastio.com

The TIME DISPLAY shall be a 3-digit readout. The character height shall be a minimum of 0.36-inch. A decimal point shall be provided between the latest significant digit and the adjacent digit. Inputs will be binary-coded hexadecimal (BCH).

The TIME DISPLAY indicator and all low-voltage indicator lamps (all lamps except FLASH) shall be extinguished when the controller cabinet front door is closed.

Indicator lamps shall be rated for 5,000 hours minimum life and shall be replaceable from the front of the display panel without the use of tools. Screw base lamps will not be acceptable.

All indicators shall be readily visible during normal daylight conditions.

Display panel labeling shall be permanent and shall agree with the labels shown on the plans.

Display panel connectors C5S and C6S shall intermate with connectors C5P and C6P respectively in the cabinet.

Display panel configuration shall be as shown on the plans.

ENVIRONMENTAL CONTROL UNIT.--The environmental control unit shall include all equipment necessary to maintain the cabinet inside air temperature within the limits required under "TESTING" of these special provisions.

An air conditioner shall be used to cool the cabinet inside air. The air conditioner shall be completely contained within the controller cabinet, yet shall be readily removable for replacement. Condensate shall be removed from the cabinet in the exhaust air.

ClibPDF - www.fastio.com

The air conditioner shall be equipped with a thermostat to control the entire unit (compressor, condensor fan and evaporator fan). The thermostat shall have a differential adjustable through a minimum range of 5°F to 15°F and the cut-in temperature shall be adjustable from 80°F to 100°F, minimum.

The air conditioner shall be provided with a 36-inch minimum power cord terminated with a NEMA, Type L5-15P plug.

A supplemental heater with a minimum rating of 250 watts shall be provided. The heater may be included in the air conditioner unit. The heater shall turn on by means of a thermostat at 45° ± 4°F. The thermostat differential shall be 5°F, maximum.

EQUIPMENT LIST AND DRAWINGS.--Detailed equipment layout scale drawings and wiring diagrams of all equipment installed in the controller cabinet shall be submitted to the State for approval prior to production.

Cabinet wiring diagrams shall be contained in a clear plastic envelope mounted on the inside of the front door.

The Contractor shall furnish 3 sets of controller cabinet schematic wiring diagrams. The diagrams shall be non-proprietary and shall identify all circuits in such a manner as to be readily interpreted. Three sets of circuit diagrams of the plug-in modules (switching devices, monitor unit, display panel, etc.) shall also be furnished. The wiring and circuit diagrams shall be submitted with each controller when it is delivered for testing.

FLASHER.--Flasher shall be a solid-state device, with no contact points or moving parts, producing between 50 and 60 flashes per minute with a 40 to 60 percent duty cycle. The flasher mechanism ohall be mounted on a plug-in base with a plug-in mounting.

ClibPDF - www.fastio.com

Flasher shall utilize zero-point switching, with turn-on at the zero voltage point, ±5 degrees, and turn-off at the zero current point, ±5 degrees, of the power line sinusoid.

Flasher shall provide 2 output circuits to permit alternate flashing of signal faces and shall be capable of carrying a minimum of 10 amperes per circuit at 120 volts.

The depth of the flasher shall not exceed 8.0 inches from the panel surface holding the mating connector, including the hand pull device. The flasher shall be no more than 1.90 inches in width and no more than 4.2 inches high. The lower surface of the flasher shall be between 2.05 inches and 2.10 inches below the centerline of the connector configuration. No part of the flasher shall extend more than 0.90 inches to the left nor more than 1.10 inches to the right of the centerline of the connector pin configuration as viewed from the front.

Flasher output circuits shall be connected to the following designated red signal output circuits:

Flasher 1, Circuit 1 - ØA1, ØC1	Flasher 2, Circuit 1 - ØB1, D1
Flasher 1, Circuit 2 - ØA2, ØC2	Flasher 2, Circuit 2 - ØB2, D2

FLASHER RELAY.--The Flasher Relay shall conform to paragraphs 1, 2, 3, 4, and 7 of the "Flash Transfer Relay" Specification of these provisions.

A mercury contactor may be supplied in lieu of the specified relay. The contactor shall be rated at N.C., 60 amp., 120 VAC.

FLASH TRANSFER RELAY.--The relay shall be designed for continuous duty. Relay shall operate during ambient temperatures from -18° C to +70°C.

ClibPDF - www.fastio.com

Relay shall be provided with double-pole, double-throw contacts. Contact points shall be of fine silver, silver-alloy, or superior alternative material. Contact points and contact arms shall be capable of carrying a current of 20 amperes, per contact at 120 volts, 60 Hz A.C.

Coils shall have a power consumption of 10 volt amperes or less and shall be designed for continuous duty on 120 volts A.C.

A leakage resistor, which will permit a small amount of current to pass through the relay coil if the contacts should remain closed after the coil circuit is opened, shall be installed with each relay to overcome residual magnetism effects.

The flash transfer relays shall be mounted in the same EIA rack-mounted chassis as the corresponding vehicle signal switching devices.

Flash transfer relays shall be connected to flash all red vehicle signals.

Flash transfer relays shall be provided with a dust cover, shall have no exposed live parts and shall intermate with a CINCH-JONES socket S-408-SB connected as shown on the plans. The socket shall be positioned with slots 7 and 8 at the top of the base.

HOUSING.--The cabinet shall contain a raintight and dust-tight steel compartment in which the controller is housed. The housing shall have a factory-applied rust resistant prime coat and the exterior shall be finished with an enamel finish coat conforming to Federal Standard 595a, Color No. 34672.

A 7-ounce minimum, spray can of the paint used as the finish coat shall be furnished with each cabinet.

ClibPDF - www.fastio.com

The basic cabinet and door shall be 14-gage minimum thickness steel, with all seams continuously welded.

The housing shall have single front and rear doors each equipped with a lock. When the doors are closed and latched with the key removed, the door shall lock. The latching handles shall have provisions for padlocking in the latched position. Details of construction may vary from that shown on the plans if approved by the Engineer. The front door shall have a continuous hinge mounted near the left edge when viewed from the front and the rear door shall have a continuous hinge mounted near the right edge when viewed from the rear.

Front and rear doors shall be provided with catches to hold the door opening at 90 and 180 degrees, plus or minus 10 degrees. The catches shall securely hold the door open until released.

The housing shall include lifting eyes to be used when placing the cabinet on the foundation. Lifting eyes shall be located on the hinged corners (top plane) of the cabinet, positioned diagonally. The eye shall be minimum 3/4 inches in diameter.

The police panel door shall be equippped with a lock for a master-keyed police key.

Two keys shall be furnished for the police lock. Each police key shall have a shaft at least 1 3/4 inches in length.

The cabinet shall include 2-pair of full-length adjustable equipment mounting angles of 10-gage cadmium plated steel tapped with 10-32 threads spaced to meet EIA standards.

The inside walls, doors and ceiling fo the housing shall be insulated with the equivalent of 1/2 inch thickness, fire-retardant, material with a K-factor of 0.25. Each cabinet

ClibPDF - www.fastio.com

surface plane shall be covered by a continuous piece of insulating material. No patchwork piecing will be allowed.

A minimum of 10 1/2 inches of rack mounting space shall be provided for controller unit mounting.

All slide mounting hardware required for installing the controller unit in the cabinet shall be provided.

The cabinet base layout shall accommodate the anchor bolts, and conduits shown on the plans.

ISOLATION BOARD.--The isolation board shall provide isolation between electrical contacts external to the controller cabinet (pedestrian push buttons, preemption, etc.) and the computer input.

The external circuits shall pull up at +15 to +24 volts DC and shall present "ground true" logic to the display panel. The isolation board shall in turn present "ground true" logic to the controller unit inputs. The external circuits will be tested by connecting the ground through a 27--ohm resistor to simulate ground true condition.

Nine isolated circuits shall be provided to the computer input. These circuits, as identified on the display panel, include TEST circuits A1P, A2P, B1P, B2P and SPARE circuits 1 through 5. Minimum isolation voltage shall be 1,500 volts.

The isolation board shall be incorporated into the display panel. It shall be mounted on the display panel for easy access without the removal of other panel equipment.

ClibPDF - www.fastio.com

LOAD RACK.--The load rack shall intermate with and support a California Standard solid-state switching device. Card guides shall be provided with the load rack to help support the switching device.

The load rack shall utilize 10 1/2 inches of rack height and shall be capable of containing 12 switching devices, and 6 flash transfer relays and the monitor unit. Two flash transfer relay sockets shall be for future use.

Red vehicle signal circuits shall be accessible between the switching device output and the flash transfer relay at a terminal block.

The spare switching device circuits on the pedestrian phases shall be connected as follows:

Switching Device	Input	Output
Air-Yellow (Phase W)	C1P-35, C5P-35	Field Terminal 126
A2P-Yellow (Phase X)	C1P-36, C5P-36	Field Terminal 129
B1P-Yellow (Phase Y)	C1P-37, C5P-37	Field Terminal 132
B2P-Yellow (Phase Z)	C1P-38, C5P-38	Field Terminal 135

All signal circuit inputs to the monitor unit shall be directly connected to the respective field terminals.

Monitor unit channels 9, 10, 11 and 12 shall be connected to phases W, X, Y and Z, respectively.

MONITOR UNIT.--The monitor unit shall monitor 12 vehicle phase green indications, and 12 pedestrian WALK Phase indications, and the cabinet power supply. All phases shall conflict with all other phases unless a special connection has been made to define a non-conflict.

ClibPDF - www.fastio.com

Conflicting indications are defined as occurring when 25 volts RMS or more at 60 Hz appears on any 2 green or "WALK" circuits that control conflicting traffic movements. Conflicting indications lasting less than 200 milliseconds or conflicting voltage of less than 15 volts RMS shall not cause the monitor to trip. The monitor shall trip within 500 milliseconds if a conflict exists.

Tripping of the monitor shall cause a normally energized output relay to de-energize and automatically switch the signals from normal to flash operation and cause the stop time input to become grounded.

The output relay contacts shall be ratex from 3 amperes, inductive, at 120 volts.

The monitor shall be mounted on a printed circuit board that will plug into a 56 pin double readout edge connector mounted in the Load Rack.

A lamp to indicate tripping and a reset switch shall be mounted on the monitor front panel.

Monitor shall be equipped to indicate monitored phases (circuits) in conflict at time of trip. Indicators shall be visible in sunlight.

The monitor unit shall utilize integrated circuits providing a noise margin of 4.5 volts or more.

Removal of the monitor unit shall not cause the intersection to go into flashing operation. The cabinet shall contain a conspicuous warning against unattended operation with the monitor unit removed.

The intersection shall go into flashing operation by tripping the monitor unit if the cabinet power supply output voltages fail.

ClibPDF - www.fastio.com

The monitor unit shall have the following pin assignments:

1	Channel No.	1 Green	A	Not Used	
2	Channel No.	1 Walk	B	Channel No.	2 Green
3	Not Used		C	Channel No.	2 Walk
4	Channel No.	3 Green	D	Not Used	
5	Channel No.	3 Walk	E	Channel No.	4 Green
6.	Not Used		F	Channel No.	4 Walk
7	Channel No.	5 Green	H	Not Used	
8	Channel No.	5 Walk	J	Channel No.	6 Green
9	Not Used		K	Channel No.	6 Walk
10	Channel No.	7 Green	L	Not Used	
11	Channel No	7 Walk	M	Channel No.	8 Green
12	Not Used		N	Channel No.	8 Walk
13	Channel No.	9 Green	P	Not Used	
14	Channel No	9 Walk	R	Channel No.	10 Green
15	Not Used		S	Channel No.	10 Walk
16	Channel No.	11 Green	T	Not Used	
17	Channel No.	11 Walk	U	Channel Co.	12 Green
18	Not Used		V	Channel No.	12 Walk
19	"Not Connected"		W	+5 volts DC	
20	"Not Connected"		X	-5 volts DC	
21	AC Ground		Y	Logic Ground	
22	"Not Connected"		Z	External Reset	
23	+24 volts DC		a	+24 volts DC	
24	"Not Connected"		b	Relay Circuit No. 1 n.c.	
25	"Not Connected"		c	Relay Coil	
26	Relay Circuit No. 1 n.o.		d	Relay Circuit No. 1 common	
27	Relay Circuit No. 2 n.o.		e	Relay Circuit No. 1 n.o.	
28	Relay Circuit No. 2 n.o.		f	"Not Connected"	

POWER DISTRIBUTION PANEL.--A power distribution panel shall be furnished in the cabinet. The power distribution panel shall be mounted on the EIA rack and shall utilize 7 inches of rack height. All equipment shall be readily accessible for ease of replacement.

ClibPDF - www.fastio.com

The following equipment shall be provided with the power distribution panel:

Main circuit breaker
Equipment circuit breaker
Air conditioner circuit breaker
Signal bus circuit breaker
Flash bus circuit breaker
Equipment receptacle
Flashers
Flash relay
Power line surge protector
Mercury contractor (MC 1) N.O. 60-ampere, 120-volt AC

POWER SUPPLY.--A power supply shall be provided in the cabinet to operate all peripheral hardware installed in the cabinet. The peripheral hardware shall include all electrical equipment not wholly dependent on line voltage power (vehicle detectors, monitor unit, watchdog timer, switching devices, pedestrian push button and preemption circuits and display panel).

The power supply shall be slide-mounted in a 19-inch EIA rack. The chassis shall utilize no more than 7 inches of panel height and shall have hand-pulls to facilitate installation and removal.

The power supply shall have a minimum output capacity of +5 volts @ 1.0 amperes, -5 volts @ 1.0 amperes and +24 volts @ 7.5 amperes. All outputs shall be short-circuit protected.

The power supply front panel shall include the following:

1. All fuses and circuit breakers
2. Pilot lamp
3. Test points or meters for monitoring all outputs.

ClibPDF - www.fastio.com

The power supply, including slide mounting hardware shall be interchangeable with the power supply in the California Standard Type 200 cabinet.

SURGE ARRESTOR.--A surge arrestor shall be furnished to reduce the effects of voltage transients on each power line and shall have ratings as follows:

Recurrent peak voltage	184 volts
Energy rating, maximum	20 joules
Power dissipation, average	0.85 watts
Peak current for pulses less than 7 microseconds	1250 amperes

Standby current shall be one milliampere or less for 60 Hz simusoidal input.

SWITCHING DEVICES.--Signal light circuits shall be controlled by 3-circuit solid-state switching devices, which shall be plug-in mounted to a base as shown on the attached plans. Each circuit shall have a minimum rating of 1,000 watts for tungsten lamp or gas tubing transformer load at 120 volts, AC. Switching devices shall be unaffected by transient voltages when tested in accordance with Test Method No. Calif. 667.

The switching device shall utilize zero-point switching, with turn-on at the zero voltage point, +5 degrees, and turn-off at the zero current point, ±5 degrees of the power line simusoid. Zero voltage turn-on is not required during the first half-cycle of line voltage during which the input signal is applied. A reed relay, rated for at least 10 million operations, may be used in the input portion of the switching device.

The input command signal shall be the equivalent of an open-collector NPN transistor as provided under Type 200 controller unit "MICROCIRCUIT INTERFACE".

ClibPDF - www.fastio.com

Indicators for each controller input circuit shall be visible in sunlight when viewing the installed switching device.

A low-level input signal (saturated NPN transistor, 0 to +2.0 volts, DC) shall cause the switching device to be energized. A high-level input signal (cut-off NPN transistor) shall cause the switching device to be de-energized.

During normal operation (no circuit or one circuit energized) the switching device shall not use more than 20 milliamperes from a +24 volt DC source.

The load switch shall not apply more than 30 volts, peak, to the signal imput line, nor shall the input signal source be required to sink more than 10 milliamperes. The switching device shall have a PRV rating of not less than 400.

Construction of the switching device shall be such that personnel inserting or removing the module will not be exposed to live parts and will not be required to insert their hands or fingers into the load rack. Hand pulls shall be provided.

The switching device shall mate with the socket shown on the attached plans. No other equipment within the cabinet shall use a socket which will accept a switching device.

RESTART ORIENTATION TIMER.--A restart orientation timer shall be connected to the proper computer input. It shall start timing whenever the computer power is interrupted and shall automatically reset.

The circuit shall time the duration of a line voltage power interruption to the switching devices. The time duration shall be readily selectable throughout a minimum range of 0.5 to 3.0 seconds, ±30 percent. Analog timing will be permitted. If the

ClibPDF - www.fastio.com

power interruption is less than the selected time, the timer shall output a high level signal. When the power interruption exceeds the selected time, a low level signal, compatible with the controller unit, shall be outputed.

The restart orientation timer shall be incorporated into the display panel.

TERMINAL BLOCKS.--Terminal blocks shall be provided for terminating field conductors.

The detector and auxiliary field wire terminal blocks shall be barrier type with marker strips and shall be provided with 8 - 32 x 5/16" minimum, nickel or cadmium plated brass binder head screws and inserts. The field terminal blocks for the signal indications and the required unused positions shall be as specified above for detectors, except that screws shall be 10-32, minimum. The terminal blocks shall be readily accessible through the cabinet rear door.

Power line service terminal blocks shall be labeled L1, N and L2, respectively and shall be covered with a clear insulating material to prevent inadvertent contact. Terminating lugs large enough to accommodate #2 AWG conductor shall be furnished for the service terminal blocks.

One or more field terminals shall be provided for each line voltage field circuit. A minimum of 12 unused field terminal positions shall be provided for additional line voltage circuits.

Four field terminal positions shall be provided for each vehicle detector module. Two positions are to be used for loop detector modules. All 4 positions are to be used when magnetometer detector modules are inserted into the detector rack.

ClibPDF - www.fastio.com

The terminal blocks shall be rated for 20 amperes and 1000 volts, RMS, minimum.

WATCHDOG TIMER.--A watchdog timer shall be provided in the cabinet, and housed in the Display Panel. The watchdog timer shall monitor a designated computer output to determine if the real time clock in the computer is operating properly.

The computer output will be the equivalent of an NPN open-collector transistor. The output transistor will be turned on at a pulse repetion rate of 5 pulses per second. The pulse duration will be 100 milliseconds. If the pulse repetition rate is less than 3 pulses per second, the watchdog timer shall automatically place the intersection in flash operation.

The watchdog timer shall be powered from the cabinet power supply and be so designed that when power is removed, the intersection shall be placed in flash operation. Output relay coil shall be rated for continuous duty. Output relay contacts shall be rated for 3 amperes, inductive, at 120 volts.

The watchdog timer shall indicate when it is tripped. The indicator shall be readily visible from the front of the display panel.

A switch shall be provided to inhibit the watchdog timer.

Removal of the watchdog timer shall not cause the intersection to go into flashing operation.

WIRING.--The cabinet wiring shall conform to the following specifications.

ClibPDF - www.fastio.com

All live parts or conductors which could be a hazard to personnel when the front door is open shall be covered with suitable insulating material.

Outlet receptacles shall be provided for the following:

Equipment (1-front, 1-rear)	NEMA Type	5-15R duplex
Computer (rear only)	NEMA Type	L5-15R
AC and heater (rear only)	NEMA Type	L5-15R duplex

The convenience receptacles shall have ground fault circuit interruption as defined in the Code. Circuit interruption shall occur at 6 milliamperes of ground fault current and shall not occur on less than 4 milliamperes of ground-fault current.

Cabinet circuit wiring shall be arranged to provide safe and reliable operation of the signal heads during normally encountered circumstances (power restart, removal of display panel, changing vehicle detector modules, etc.). Care shall be exercised in conductor routing to minimize interference and crosstalk.

Conductors from connector C1 to the detector rack shall be of sufficient length to connect to any detector output erminal block.

Cabling shall be routed to prevent conductors from being in contact with metal edges. Cabling shall be arranged so that any removable subassembly may be removed without disturbing conductors not associated with that subassembly.

The cabinet shall be wired to conform with the one-line diagram in the plans.

The grounded conductor (signal common) copper terminal bus shall not be grounded to the controller cabinet or connected to logic ground and shall provide a minimum of 10 terminals for connection of field conductors.

ClibPDF - www.fastio.com

An equipment grounding copper conductor bus shall be provided in each controller cabinet. The bus shall be grounded to the cabinet and shall be connected to the metal conduit system or other approved ground with a No. 8 AWG or larger bare grounding conductor.

With all of the equipment in the cabinet in place and connected, the resistance between the grounded conductor terminal bus and the equipment grounding conductor bus shall be 100 megohms, minimum.

ClibPDF - www.fastio.com

SECTION 3

ENVIRONMENTAL REQUIREMENTS AND TESTING PROCEDURES

General

The general procedures and equipment used in the evaluation of the Type 200 system are only a minimum guideline and should not limit the testing and inspection which will properly assure the compliance of the system with these specifications.

These test procedures are not only for use by the State testing agency, but for the manufacturer of the equipment who shall certify that he has conducted inspection and testing in accordance with these specifications.

Inspection

A visual and physical inspection shall include mechanical, dimensional and assembly conformance of all parts of these specifications which can be checked visually or manually with simple measuring devices. Workmanship shall be in accordance with the highest industry standards.

Environmental

All components in this system shall properly operate under the following conditions:

Humidity	0 to 90% at 40°C
Powerline	117+13 VAC, 60+3 Hertz
Transient	Calif. 667
Shock	MIL.-Std.-810 Method 516.1
Vibration	MIL.Std.-810 Method 514.1 Equipment Class 6

ClibPDF - www.fastio.com

Items shall operate in an ambient environment of -18° to +60°C and comply with the requirements of UL Bulletin of Research No. 23 "Rain Tests of Electrical Equipment". The ambient environment is defined as the temperature and humidity measured outside the cabinet.

Testing

The cabinet with all equipment installed will be tested as noted below.

ROOM TEMPERATURE TEST.--The controller shall soak at 75°F ±5°F for a minimum of 16 hours. The cabinet doors shall be shut during this time. After soaking, the front cabinet door will be opened, the power line transient test and functional tests will be performed and the system subjected to high and low voltage tests.

OVERTEMPERATURE TEST.--With the air conditioner disconnected and the cabinet doors closed, the ambient temperature will be increased at a rate of approximately 15°F per hour. The overtemperature protection must remove power from the controller unit when the temperature at the controller unit inlet reaches 120°F ±2°F. When controller unit overtemperature protection removes power, the signals shall revert to the flash mode of operation. The ambient temperature will then be lowered and the overtemperature protection device shall reapply power to the controller unit when the temperature has been reduced to no more than 4°F below the temperature at which the power was removed. The system shall resume normal operation within 5 seconds of the time the power is reapplied to the controller unit.

HIGH TEMPERATURE TEST.--The air conditioner will be reconnected and the power will be completely removed from the system and the ambient temperature increased to 122°F. With the doors closed,

ClibPDF - www.fastio.com

the cabinet will soak for approximately 16 hours at 122°F. The power will then be reapplied to the system and flashing operation shall result immediately. The air conditioner shall reduce the cabinet temperature until the overtemperature control reapplies power to the controller unit. The normal mode of operation shall result within 5 seconds after power is reapplied to the computer. The cabinet interior temperature shall be reduced and maintained at less than 100°F for at least 8 continuous hours by the air conditioner, during which time the system shall continue normal operation. The power line transient test, functional tests and voltage limit tests will be performed during this period. Then the front cabinet door shall be opened for approximately 5 minutes during which all equipment shall continue normal operation.

UNDER-TEMPERATURE TEST.--All supplemental heaters will be disconnected and power will then be reapplied to the controller unit. With all cabinet doors closed, the ambient temperature will be reduced from 122°F to 20°F at the rate of approxiamtely 15°F per hour.

The undertemperature protection shall turn off power to the computer when the inlet air temperature reduces to 37° ±4°F. The signals shall then revert to the flash mode of operation. The temperature inside the cabinet will then be increased and power shall be reapplied to the controller unit at no more than 4°F over the power-off temperature.

LOW TEMPERATURE TEST.--All supplemental heaters will be reconnected. Power to the controller will be disconnected. The ambient temperature will be lowered to 20°F and the system without power will be soaked for 4 to 16 hours. Power will be reapplied to the controller. The signals shall operate in the flashing mode immediately. The system shall resume normal operation within 5 seconds from the time power is reapplied to the controller unit by the undertemperature control.

ClibPDF - www.fastio.com

The controller shall cintinue normal operation for a minimum of 8 continuous hours at 20°F ambient temperature, during which time the system will be sucjected to power line transient test, functional tests and voltage limit tests. The cabinet front door will then be opened for approximately 5 minutes during which time the system shall continue normal operation.

Manufacturers Testing Certification

The manufacturer shall supply with each item a full test report of the quality control and final test conducted on each unit. The test report shall indicate the tester and shall be signed by a responsible manager.

A minimum of 10% or two units, whichever is greater, shall be tested at -18%C and at 60°C. All units shall be fully tested at 25°C.

End of Text on
TCC Controller Specifications

ClibPDF - www.fastio.com

II. METHOD OF TEST FOR THE POWER LINE TRANSIENT SUSCEPTABILITY

Introduction

The use of solid state circuitry in traffic controllers has enabled the manufacturers to reduce the size of control equipment, to build more flexible and sophisticated units, and to eventually reduce the cost of the controllers. However, the fast responding solid state components were found to be susceptible to malfunctioning due to power line transients. A method was needed to assure adquate equipment design to eliminate or minimize this problem.

Conclusions

1. The "Method of Test for Power Line Transient Susceptability", Test Method No. Calif. 667, as included in this report, is a satisfactory method to minimize or practically eliminate the failure of solid state controller or other solid state equipment due to power line transient under 300 volts.

2. Improvements can readily be incorporated into the design of solid state controllers and other solid state equipment without significant cost increases to minimize the effect of transient voltages up to 300 volts.

Implementation

1. Test Method 667 with some updating has been used since 1969 and has practically eliminated traffic controller failures due to power line transients.

2. Manufacturers, under the requirements of Test Method 667 have incorporated traffic controller equipment design changes, at a nominal cost, that have essentially eliminated failures due to normally occurring power line transient voltages.

ClibPDF - www.fastio.com

Discussion

In the early days of solid state controllers many reports were received from the field about controllers malfunctioning for no apparent reason such as jumping out of normal operation sequence, blinking of traffic signals, short timing of intervals, etc. It was suspected that power line transients were causing the controller malfunctions. Line transients of around 100 volts were measured at some of the controller problem locations. We were then able to duplicate controller malfunctions similar to those in the field by introducing transients on the power line in the laboratory.

A power line transient susceptability test method was developed by the Caltrans Laboratory to provide a guideline to manufacturers for proper design to assure noise suppression in their equipment and to provide an acceptance testing procedure for the acquisition of solid state equipment.

The "Method of Test for Power Line Transient Susceptability", as included herein, has been used successfully, with some updating, since 1969. As soon as the manufacturers were given the test parameters, they responded quite rapidly with designs to meet the new transient requirements. While solid state controller units manufactured before 1969 were susceptible to power line transients and would normally malfunction when tested per Test Method No. Calif. 667, the controller units after 1969 have been designed to withstand the 300 volt transient in accordance with the Test method requirements.

During this last 6 year period since the adoption of the Test Method we have received very few controller malfunction complaints related to power line transients. continued use of this Test Method is recommended for purchase of controllers and all other solid state equipment that may be subjected to powerline transients.

ClibPDF - www.fastio.com

METHOD OF TEST FOR THE POWER LINE TRANSIENT SUSCEPTIBILITY

Scope

The following test procedure is used for determining the ability of a traffic control system to maintain normal operation when subjected to power line transients.

Procedure

A. Objective

The objective of this test is to apply a series of spikes of both positive and negative polarity to all points on the 60 Hz sine wave of the primary side of the controller power supply.

B. Spikes

The spike used in this test shall have the following features:

1. Peak amplitude of 470 volts.
2. Fast rising leading edge.
3. Trailing edge of spike shall decay exponentially with a minimum time constant of 10 microseconds.

C. Apparatus

1. Power source, 120 volts, 60 Hz A.C.
2. Switch, D.P.D.T.
3. Switch, spring return pushbutton.
4. Power supply, 600 volt D.C.
5. Resistor, 22,000 ohms 1 watt.
6. Storage oscilloscope, Tektronix Model 564.
7. Capacitor, oil filled 10 microfarad 600 volt.
8. Power receptacle, dual 120 volts.

D. Test Procedure

1. Arrange and connect the equipment as shown in Figure I.
2. Adjust the voltage of the D.C. power supply to 470 volts $\pm$ 5 volts.
3. With S_1 in the position to produce positive spikes, operate S_2 manually or automatically at 5 second intervals until spikes have been applied to all points on the A.C. power sine wave and the equipment has been operated through all its functions and sequences.
4. Reverse the polarity of the spike with switch S_1 and repeat Step 3.

E. Test Results

The equipment shall be deemed to have failed the above test if its operation or component parts are affected in any manner. In case of traffic controller or solid state load switches, the associated lamp system shall not exhibit any visual blinking during the test.

F. Reporting of Results

Report the test results on Form T-6039.

REFERENCES

A California Method

End of Text on Calif. 667-B

ClibPDF - www.fastio.com

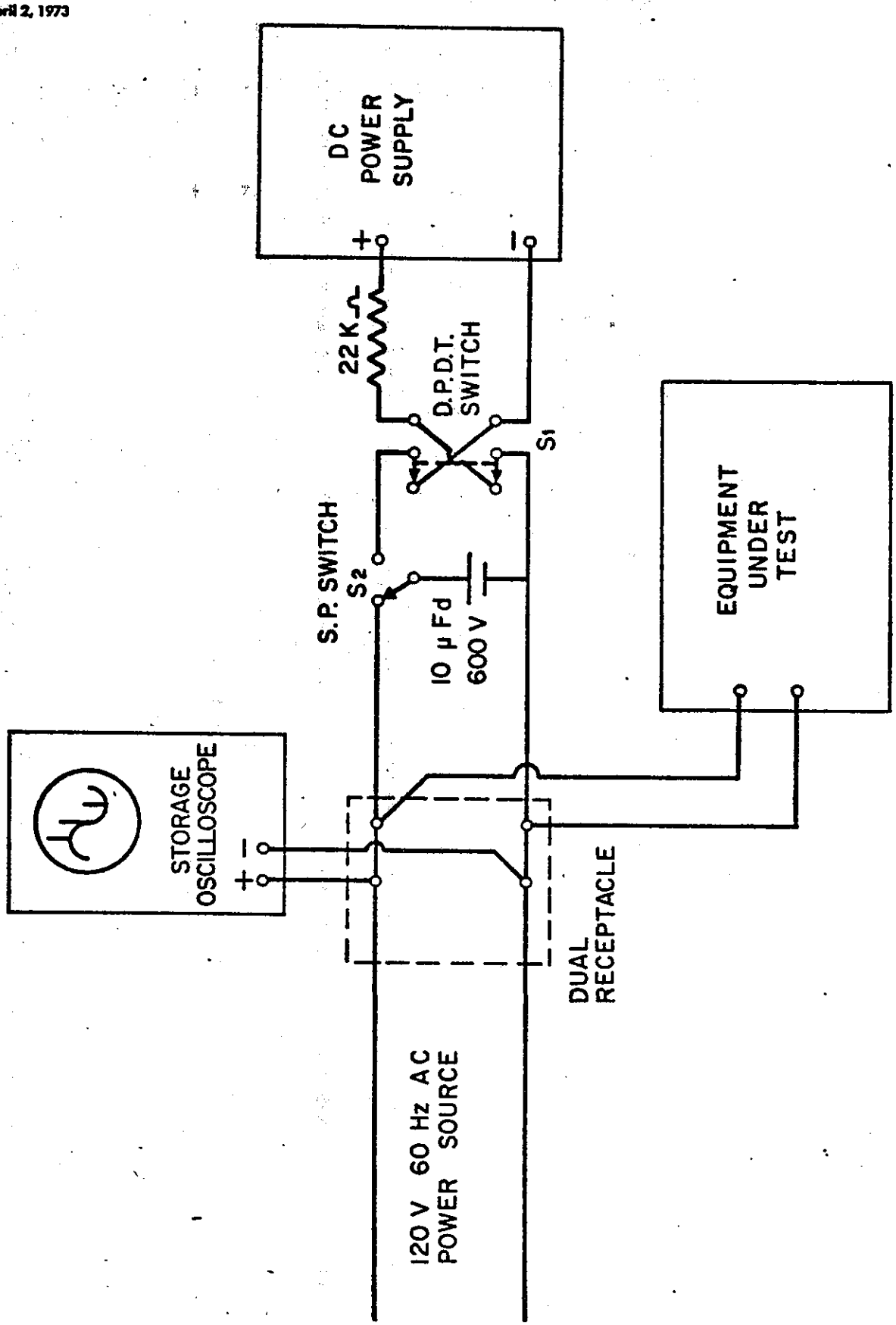

FIGURE 1

ClibPDF - www.fastio.com

III. METHOD OF TEST FOR FUNCTION AND PRE-INSTALLATION INSPECTION OF TRAFFIC SIGNAL SYSTEMS

Introduction

Up until recent years, new installation of traffic signal controllers on California highways were fraught with many initial field problems and failure to comply with specifications. Frequently it was not until the time of "turn-on" that the field inspectors first became aware that controllers were not in compliance with specifications or were not functioning properly. The manufacturer or vendor would attempt to correct the problems at the intersections, at the expense of disrupting and endangering traffic. Often it would require days or weeks to correct the problems, witnessed by an annoyed and inconvenienced traveling public. This experience revealed the need for a more systematic approach to assure the quality and performance of traffic controller equipment and systems.

Conclusions

1. Test Method No. Calif. 658 is an effective method to minimize field installation and initial operational problems on traffic controllers.

2. Quality control in the manufacture and assembly of traffic controller systems needs further standardization and improvement.

Implementation

1. Test Method No. Calif. 658 has been used, as a contract requirement by all controller manufacturers, over the past 10 years with notable improvements at the field installation and operational stages.

ClibPDF - www.fastio.com

2. In addition to Test Method 658 the specifications now include a requirement for manufacturers to provide a written statement of their quality control procedures that are to include essential specified elements.

Discussion

The test method, which is included herein, was developed to aid Caltrans and other purchasing agencies in the implementation of more systematic acceptance inspection and testing for compliance with the specifications. It also gives the manufacturer advance notice as to physical and functional performance requirements the controllers must meet.

An apparent major problem has for years been the lack of adequate quality control in the controller manufacturing plants. Some of the contributing factors include the growing competion in this field and the rapid evolution of electronics state-of-the-art requiring much reorientation and retaining of the manufacturers professional, technical, and production employees as well as the electrical contractors and their trades people doing the installation. Another factor is the traditional lack of uniformity of design between user agencies. In fact, there has even been a significant lack of uniformity between Caltrans Districts and even more between local agencies.

Some progress has been made through the development of Test Method No. Calif. 658, as included in this report, but more needs to be done to improve manufacturing quality control and to promote uniformity of design. As noted in Part 1, "TCC Cabinet Specifications" of this report, significant progress has been made toward uniformity. In an effort to establish better quality control and to reduce our quality assurance inspection and testing costs, we now require the manufacturer to submit a certified

ClibPDF - www.fastio.com

quality control plan including specified elements. As yet the improvements brought about by this procedure are not too impressive but we have been able to cut back some of our traditional 100% testing rate on all controller equipment and components.

This test method (Test Method No. Calif. 658-B) has been updated and used by the State of California for testing traffic controllers for the past 10 years with good results. Most of the controller problems are detected and eliminated during the acceptance testing period. Now very seldom will controllers malfunction upon turn-on. All controller manufacturers are required to use this test method or one similar to it for units sold to State of California as part of their own quality control program.

We recommend continued use of this test method for acceptance testing of traffic controllers by all municipalities.

ClibPDF - www.fastio.com

METHOD OF TEST FOR FUNCTION AND PRE-INSTALLATION INSPECTION OF TRAFFIC SIGNAL SYSTEMS

Scope

The general procedure and equipment to be used in the evaluation of traffic signal equipment prior to field installation are described in this method. All inspection and testing procedures outlined in this test method are only a guideline to those necessary to assure compliance with contract specifications. Some of these procedures may be superseded by the contract specifications and plans or by later editions of the Standard Specifications. It is of the utmost importance that the Standard Specifications, contract special provisions, and contract plans be completely understood before contract specification testing is done.

Procedure

A. Apparatus

1. Electric stop clock capable of measuring accurately time lapse of 0.01 second and greater for manually monitoring of events.

2. Necessary cabling and connectors to interconnect the monitoring devices to the system under test.

3. Variable voltage source capable of supplying adequate AC power for the system under test. This supply shall be variable from 110 v. AC to 130 v. AC.

4. Transient test equipment per latest Test Method No. Calif. 667.

5. Equipment to measure resistance, AC and DC currents and voltages.

6. Lamp load rack.

B. Control Factors

1. Perform this test method in a suitable area specified by the Materials and Research Department, or their designee, where controlled conditions can be maintained.

2. Perform all tests in this test method while the unit is being supplied with a voltage source of 120 volts ± 5 volts, 60 Hz, in an ambient temperature of 77° F ± 7° F. Also, test for satisfactory operation at the voltage extremes specified in the contract specifications.

C. Tolerances

All tolerances which are not definitely stated in the Standard Specifications or Special Provisions are assumed to be those tolerances used by ASA, NEMA, ASTM and other regulations and codes as stated in Section 86-1.02 of the Standard Specifications, applicable to the unit under inspection.

D. Inspection

The visual and physical inspection shall include mechanical, dimensional and assembly conformance of all parts of the Specification which can be checked visually or manually with a simple measuring device.

1. Check the equipment received against the invoice. Notify vendor of any shortages immediately.

2. Obtain the contract specifications and the reduced plans. Check plans and specifications to verify that all the required equipment, manuals, schematics, etc., have been submitted.

3. Visually and physically check all the equipment (cabinet, manuals, schematics, modules, printed circuit boards, conductors, cabling, etc.,) for compliance with the contract specifications. Use the "Traffic Signal Controller Check List", Figures I and II, as the basic list and add the unique features specified in the contract special provisions and plans.

4. Arrange and connect the equipment in the cabinet as shown in the cabinet layout diagram. Check for blocked or stacked equipment. Check for ease of using controls and ease of equipment removal.

E. Testing

The testing for compliance with contract specifications shall include electrical characteristics such as capacity, sensitivity, power consumption, etc., and operations and functions such as phasing sequences, timings, standard and auxiliary functions, etc.

1. After arranging and connecting the equipment as shown in the cabinet layout diagram, connect lamp loads of 25 watts or more to each signal output load switch to simulate signals at the intersection.

At least one load switch in each cabinet should be tested loaded with 1000 watt incandescent lamps.

2. Place the main switch in the cabinet to the "Off" position.

3. Make certain that the proper polarity and the specified power is connected to the cabinet main power terminals. Turn the main switch "On".

4. Check every switch (power switches, flash switches, push buttons, etc.) by actuation to verify proper operation.

5. Check the cabinet light and fan for proper operation.

6. Check the convenience outlet for proper polarity.

7. Set the timing adjustments to some convenient values. Place "recall switch" on all traffic and pedestrian phases. Check to see if the phase sequencing is as specified.

8. Connect the transient test unit to the cabinet power input and test according to Test Method No. Calif. 667, "Method of Test for the Power Line Transient Susceptibility of Traffic Control Systems".

9. One at a time, remove and replace the controller fuses (AC and DC), the conflict monitor fuse, the railroad preemptor fuse and the fire preemption fuse. The intersection should go into flashing operation after each fuse removal.

10. Turn off the cabinet power for more than 0.5 seconds, then turn the power back on. The controller should start at the specified phase and indication.

ClibPDF - www.fastio.com

11. Turn the cabinet power off for less than 0.5 seconds, then turn the power back on. The controller should continue to operate in cyclic operation and shall retain all actuations registered, or the intersection shall go into "flashing operation" in not less than 8 seconds. Signal operation shall resume in Phase A yellow clearance and call shall be placed on all phases.

12. Place the controller in flashing operation by the "Signal-Flash" switch in the police panel. The controller should stop-time when the cabinet stop-time switch is on the "flash" circuit.

13. Place the "intersection" on flashing operation by the internal "Signal-Flash" switch. The phasing and indication should be as specified. The controller should not be stop-timed.

14. Test the "Monitoring Device" for compliance to specification using Test Method No. Calif. 675, "Method of Test for the Monitoring Device Used in Traffic Control System".

15. Timings

Remove "recall switches", and place vehicle and pedestrian calls manually to simulate intersection traffic patterns. Check and record all the timings on the timing form. Check that all the measured timings are within specified tolerances. All the indicating lamps should be operating. Repeat the timing tests with several of the timings set at the lower and the upper extremes. The timing measurements should be made at the lamp load whenever possible.

a. Initial Period

Place a vehicle call on a phase and time the initial green period.

b. Yellow Period

Place a vehicle on a phase and time the yellow period.

c. All-Red Period

Place vehicle calls on conflicting phases and time the all-red period.

d. Extensible or Added Initial Period

Place appropriate number of vehicle calls during the red interval of the phase to be timed. While checking the added initial, place an opposing vehicle call so that phase being tested does not go to rest condition.

e. Rest Condition

Check to see that the initial period is followed by a "rest condition" in the absence of an opposing call.

f. Pedestrian Period

Place a pedestrian call and check the "walk" and the flashing "Don't Walk" periods. Also at this time check to see if the pedestrian period overrides the initial period, repeats during rest condition without change in vehicle indication, and is not extended by successive actuations.

g. Preset Gap Period

Place a constant call on the phase being tested until "Initial" has timed out, then place an opposing call. Remove the continuous call and simultaneously time the remaining green period.

h. Reducible Gap Period

Disable "guaranteed passage time". Set some convenient timings. Place a constant call on the phase being tested. After initial has timed out place an opposing call. Wait for a convenient time. Remove the continuous call from phase being tested and simultaneously time the remaining green period. Note: Follow manufacturer's instructions for making calculations.

i. Guaranteed Passage Time

Enable the "guaranteed passage time". Set some convenient timings. Place a constant call on the phase being tested. After initial has timed out place an opposing call. Wait for a convenient time. Remove momentarily the continuous call from the phase being tested for a period slightly more than the reducible gap in effect at the moment; simultaneously starting timing the remaining green. The remaining green should equal to the "present gap".

j. Maximum Green Period

Place a continuous call on the phase being tested. Place an opposing call. The total green for the phase being tested should be equal to the "maximum green" time setting. Also, verify that a call is placed to return to the phase being tested.

16. Memory Feature

a. Pedestrian Actuations

Place a pedestrian call on the phase to be tested during steady "Don't Walk" indication. Call shall be remembered and the pedestrian phase shall be answered. Place a pedestrian call during flashing "Don't Walk" indication. The call should be remembered and answered in the normal phase sequence.

b. Vehicle Actuation

Place a vehicle call during yellow indication of the phase being tested. The call shall be remembered and answered in the normal phase sequence.

Place a vehicle call during red indication of the phase to be tested. The call shall be remembered and answered in the normal phase sequence.

Disable the memory circuit on all phases. While an opposing phase is timing "initial" place a vehicle call on the phase to be tested. Verify that if the vehicle call is removed while the opposing phase is timing "initial" the controller will not answer the call. Also, verify that if the call is kept until the opposing phase enters the clearance interval, the controller answers the call.

17. Recall

Place all the pedestrian and vehicle recall switches in the "off" position. The phase sections shall function normally with the right of way being granted only upon a vehicle or pedestrian actuation, or both.

a. Minimum Recall

Place all vehicle "recall" switches in the "Minimum Recall" position. Note that the controller sequences appropriately through each phase with a green time equal to "minimum initial".

ClibPDF - www.fastio.com

b. Maximum Recall

Place all vehicle "recall" switches in the "Maximum Recall" position. Note that the controller sequences appropriately through each phase and the green time is equal to "Maximum Green Period".

c. Pedestrian Recall

Place all vehicle "recall" switches in the "Off" position. Place all pedestrian "recall" switches to the "On" position. Note that each pedestrian phase is being answered through normal controller sequence.

18. Manual Circuit

If hand control is supplied, use the hand control to advance the controller through intervals in compliance with the specifications. Also, make the necessary connection on the "manual circuit" terminals per manufacturer's instruction. Advance the controller through various intervals by applying the required signal to "manual circuit" terminal.

19. Stop Timing

Make the necessary connection to the "Stop Timing" terminals per manufacturer's instructions. Test the stop timing function for compliance with specifications by applying the required signal at all timing intervals.

20. Hold

Make the necessary connection to the "Hold" terminals. Test the hold function for compliance with specifications by placing an opposing phase on recall and applying the required signal at every green and pedestrian timing intervals.

21. Special Termination or "Force-Off"

Make the necessary connections to the "Force-Off" terminals per manufacturer's instructions. Test the "Force-Off" function by applying the required signal at all timing intervals. Check the operation for compliance with specifications.

22. Check Circuit

Make the necessary connections to the "check circuit" terminals per manufacturer's instructions. Place a continuous vehicle call on the phase that is being tested. Check for signal on the "check circuit" terminals. Also, test for "check circuit" indication by placing pedestrian call on the phase under test.

Special Features

23. Mutual Coordination

When "mutual coordination" has been provided make the necessary connection between the two controllers. Place a side street call on one of the controllers. Note that both controllers terminate the main street green simultaneously provided the minimum green has been timed out on both intersections.

24. Dual Maximum Green Period

When "Dual Max" has been provided make the necessary terminal connection per manufacturer's instructions. Set the "Max 1" timing different from the "Max 2" timing. Apply the required signal to the terminal. Place a continuous vehicle call on the phase being tested, then check to make certain that "Max 2" is timing when signal is applied and "Max 1" is timing with the signal removed.

25. Omit Skip

When "Omit Skip" feature is provided make the necessary terminal connection per manufacturer's instructions. Apply the required signal to the terminal, place a call on a phase not in the normal sequence, and verify that the controller does not skip the phase next in the normal sequence.

26. Omit All-Red

When "Omit All-Red" feature is provided make the necessary terminal connections per manufacturer's instructions. Apply the required signal and observe that the all-red clearance feature is omitted.

27. Selectable Semi-Actuated Mode

When "Selectable Semi-Actuated" feature is provided make the necessary terminal connections per manufacturer's instructions. Apply the required signal to the terminal. Observe that the phase under test is performing as a non-actuated phase and that the controller performs in compliance with specifications.

28. Detector Switching

Place the detector switching control to the "On" position. Place continuous calls on both phases (opposite direction on same road) provided with the detector switching feature. Place an opposing phase on recall. When the extension interval is being timed remove the call from one of the phases. Observe that the green is not terminated due to gap sensing. Remove the call from the opposite direction. Observe that both phases terminate green due to gap sensing. Again, place continuous call on both phases with detector switching feature. When the extension interval is being timed remove the call from one phase then, place the call back and remove the call from the other phase. Observe that as long as there is a call on one phase the other phase does not terminate the green except by maximum time limitation.

29. Calling Detectors

When calling detectors are provided, place a call through that detector during the associated green interval. Observe the indicator light to determine that a call is not being placed to the controller. Also, place a call during yellow and red interval and verify that the call is answered.

30. Railroad Preemption

When railroad preemption is provided, make the necessary terminal connections per manufacturer's instructions. Apply the required signal to the terminal during every timing interval of every phase. Verify that the sequence of the railroad preemption operation is in accordance to the specifications. Verify that vehicle and pedestrian calls are placed on all phases. Verify that all the calls remain locked in until a green indication has been given for that vehicular or pedestrian phase. Also, verify that all flashing operation except due to conflict are preempted.

ClibPDF - www.fastio.com

31. Fire Preemption

When fire preemption is provided, make the necessary terminal connections per manufacturer's instructions. Apply the required signal to the terminal during every timing interval of every phase. Verify that the sequence of the fire preemption operation is in accordance to the specifications. Verify that the pedestrian signals provide a steady "Don't Walk" indication during preemption. Verify that vehicle and pedestrian calls are placed on all phases. Verify that all the calls remain locked in until a green indication has been given for that vehicular or pedestrian phase. Also, verify that all flashing operation except due to conflict are preempted.

32. Manual Phase Selector

When manual phase selector is provided, turn the manual phase selector control on. Verify that all pedestrian push button and vehicle detector inputs are disconnected. Select every vehicle and pedestrian phase and observe that the controller unit times the programmed clearance timings before advancing to the selected phase. Also, note that the indicator lights provided for manual phase selector operate only during manual phase operation.

REFERENCES

A California Method
California Standard Specifications
Test Methods Nos. Calif. 667 and 675

End of Text on Calif. 658-B

ClibPDF - www.fastio.com

Test No._____

Contract:_____

Date:_____

TRAFFIC SIGNAL CONTROLLER

CHECK LIST

A. Cabinet
1. Type
2. Keys
3. Doors
4. Finish
5. Fan
6. Special features

B. Conductors
1. Size
2. Cabling
3. Insulation

C. Terminal Strips
1. Type
2. Capacity
3. Voltage rating
4. Terminal wiring

D. RFI Suppressors
1. For flashers
2. For load switches
3. For flashing beacons
4. For other current interrupting devices

E. Switches
1. Type
2. Capacity
3. Labeled

F. Circuit Breakers/Fuses
1. Voltage rating
2. Current rating
3. Labeled

G. Relays
1. Type
2. Base type
3. Coil VA rating
4. Capacity
5. Keyed mounting
6. Labeled

H. Load Switches
1. Type
2. Capacity vs. load
3. Base
4. Keyed
5. Labeled

I. Flasher
1. Type
2. Capacity vs. load
3. Flash rate
4. Dwell (percent)
5. Labeled

J. Controllers
1. Type
2. Phases
3. Indicators
4. Connectors
5. Modules
6. Keyed mounting of modules
7. P. C. boards
8. Quality of Parts
9. Soldering
10. Accessibility of controls
11. Workmanship
12. Board contact pin plating
13. Timing ranges
14. Overlay harness
15. Specified functions brought out
16. Specified functions control equipment
17. Will emergency control equipment fit in cabinet and function properly?
18. Modules labeled

K. Arrangement
1. Equipment stacked
2. Equipment blocked
3. Ease of equipment removal

L. Detectors
1. Type
2. Plug connection
3. Pulse mode
4. Presence mode

OPERATIONAL TESTING

A. Detectors
1. Pulse length
2. Presence hold time

B. Controller
1. Specified phasing
2. Various timings
3. Indicators
4. Pedestrian phase
5. Auxiliary functions and interconnects
6. Flash mode
7. All possible conflicts for failsafe
8. Rail and fire preemption interruption with every function and phase
9. Load switches at 1000 watts
10. Flashers at capacity
11. Interrupted power test
12. Positive and negative 300 volt transient test with all functions and phases
13. Timings and operation at input voltage of 105 and 130 VAC
14. Failsafe trip voltage

FIGURE 1

ClibPDF - www.fastio.com

Test No. _____ Date: _____

Manufacturer _____

Equipment _____

Temperature _____ Voltage _____

Timing _____

Setting	$\phi 1$	$\phi 2$	$\phi 3$	$\phi 4$	$\phi 5$	$\phi 6$	$\phi 7$	$\phi 8$	
									Initial
									Yellow
									Passage
									Added Initial
									Cars Before
									Max.
									Time Wait
									Gap
									All Red
									Walk
									Ped. Clear
									Max. Initial

Force Off _____

Hold _____

Manual _____

Stop Time _____

Semi Mode _____

Memory Omit _____

Init. Recall _____

Max. Recall _____

Indicators _____

Check Circuit _____

Phase Sequencing _____

Power Interruption >0.5 Sec. _____

Power Interruption <0.5 Sec. _____

Failsafe _____

105–130 VAC _____

Transient Test _____

FIGURE II

ClibPDF - www.fastio.com

IV. METHOD OF TEST FOR VEHICLE DETECTORS

Introduction

The field performance of vehicle detectors, in the past, has not been very reliable. These units have been known to place false calls, place permanent calls, drift with temperature, and not detect smaller vehicles especially motorcycles. The number of motorcycles on the highways has been increasing over the past years; the complaints from motorcyclists for lack of detection were increasing in the same proportion.

Conclusions

1. The "Method of Test for Vehicle Detectors", Test Method No. Calif. 675, is an adequate method to assure the sensitivity and reliability of vehicle detectors for use on streets and highways.

2. Design modifications can readily be incorporated into vehicle detector design without significant cost increases to provide adequate sensitivity and reliability.

Implementation

1. Test Method 675 has been used over the past year as a Caltrans requirement in the purchase of vehicle detectors and has essentially solved the major sensitivity and reliability problems with vehicle detectors.

2. Manufacturers, under the requirements of Test Method 675 have improved their vehicle detector designs at a nominal increase in cost to minimize or eliminate sensitivity and reliability problems. Overall the cost of detectors has actually decreased dut to innovative electronic technology.

ClibPDF - www.fastio.com

Discussion

A test method (Test Method No. Calif. 675-A) as included in this report, was developed to provide a guide to Caltrans and other purchasing agencies in acceptance testing and to make the manufacturers aware of the sensitivity and reliability requirements of the detectors. The test method is developed such that it simulates conditions very similar to those occurring in the field.

This test method has been used by State of California with very good results over the past year. Now we are purchasing units that do reliably and consistently detect all licensed vehicles including the smaller motorcycles. Using this test method we found some design weaknesses with some detectors that normally would not have been uncovered.

A new detector had an excellent performance in every respect except if a car and a motorcycle were in the detection area, and if the car left, the detector would not detect the motorcycle anymore. Another model would place a permanent call (Lock-up) if a momentary power outage occurred while a vehicle was in the detection area and the vehicle left the detection area after power was restored. These problems and others were brought to the manufacturers attention. Once the problems were defined, the manufacturers were readily able to correct the design weaknesses.

We recommend that this test method also be used in its entirety, by other agencies, when acceptance testing detectors, especially to verify the performance of new models.

ClibPDF - www.fastio.com

METHOD OF TEST FOR VEHICLE DETECTORS

Scope

The general procedure and equipment to be used in the evaluation of vehicle detectors are described in this test method. This test method should be used as a guideline to assure compliance with contract specifications. Some of these procedures may be superseded by the contract specifications and plans or by later editions of the Standard Specifications.

Procedure

A. Apparatus

1. Honda CT-100 motorcycle.
2. Variable voltage source capable of varying the voltage from 100 volts to 133 volts.
3. Flasher with 1,000 watt load.
4. Transient test equipment per Test Method No. Calif. 667.
5. Necessary cabling, stop watch, indicating lights.
6. Environmental chamber capable of varying from 0°F to 160°F.

B. Control Factors

Tests in this test method will be performed while the detector amplifier is being supplied from each of: (a) 100, (b) 120, or (c) 133 volts in an ambient temperature of $77^{o}\pm$F.

C. Inspection

1. Check the equipment received against the invoice. Notify vendor of any shortages immediately.
2. Obtain contract specification and plans. Check plans and specifications to verify that correct type of equipment, manuals, schematics, etc., have been submitted.
3. Visually and physically check the connector, fuse, circuit board, pilot light, switches, etc., for compliance with the contract specifications.

ClibPDF - www.fastio.com

D. Testing

The testing for compliance with contract specifications shall include sensitivity, power consumption, hold time, ease of tuning, stability, tracking for environmental changes, response time, etc. The following should be performed during the operational test.

1. Make the necessary connections to the vehicle detector amplifier to be tested at 77°F ± 7°F. Apply power and tune per manufacturer's instructions.

2. During tuning and testing, drive a vehicle, at random, over the detection area or simulate a vehicle going over the detection area. The vehicle detector shall tune and function properly. The detector shall be capable of being tuned within 5 minutes without requiring the detection area to be void of vehicles for more than 5 seconds at a time.

3. Perform transient voltage test per Test Method No. Calif. 667. Continue the transient test during all the operational tests. The detector shall perform without any failures.

4. Introduce sudden voltage drop of 5 volts once a second for half a second duration to simulate voltage drop created by flashing beacons. Continue the sudden voltage drop during all the operational tests. The detector shall perform without any failures.

E. Inductive Loop Detector - Operational Test

1. Install 4-3 turn, 6' x 6' loops per Standard Plans ES-5A with 40 feet of twisted loop wire from each loop to the pull box.

2. Connect the 4 loops series - parallel, as shown in Figure 1.

3. Connect 250 feet of lead-in cable. The lead-in cable shall be placed 3 feet underground in one inch metal conduit. After initial installation, the conduit shall be filled with water.

4. Make proper connections and simulate transient voltages, voltage drop, passing vehicles per D-1 thru D-4.

ClibPDF - www.fastio.com

5. Drive a Honda 100 motorcycle on one of the loops at a speed of approximately 5 mph and park at the center of the loop for 3 minutes. Detector shall indicate vehicle presence only for the duration vehicle is on the loop.

6. Remove vehicle from the loop for one minute.

7. Repeat Steps E-5 and E-6.

8. Repeat Step E-5 for 2 minutes only, then Step E-6.

9. Repeat Step E-5 for 5 minutes or until the detector drops call, whichever occurs first.

10. If pulse mode is provided, place the detector in the pulse mode, drive over the loop with the Honda 100; it shall place one pulse output.

11. (a) Interrupt power repeatedly (3-5 times) for half a second. Unit shall operate normally within 5 minutes after continuous power is reapplied.

    (b) Interrupt power for 5 minutes. Unit shall operate normally within 5 minutes after continuous power is reapplied.

12. Repeat Steps E-5 and E-10.

13. Drive a "medium size" automobile (Dodge Dart, Chevy II, Maverick, Valiant, etc.) at a speed of 5 mph. and park on one of the loops for 15 minutes. The detector shall indicate vehicle presence while vehicle is on the loop.

14. Repeat Step E-10 using an automobile.

15. Adjacent Lane Test: Drive an automobile with the frame 3 feet away from the loop. The detector shall not detect the car.

16. Park the Honda 100 on one of the loops, drive a car over one of the other loops; after the car leaves the loop area the Honda should continue to be detected.

17. Connect single 3-turn 6' x 6' loop to 250' lead-in and repeat steps E-5 thru E-15.

ClibPDF - www.fastio.com

18. Connect single 3-turn 6' x 6' loop to 750' lead-in and repeat steps E-5 thru E-15.

19. Environmental Test: Place the sensor unit into the environmental chamber at 0°F and allow the detector to stabilize for 2 hours. Repeat steps E-5 thru E-16.

20. Repeat E-19 at 160°F.

21. Perform any other tests deemed necessary to verify the unit's compliance with specifications and that it will perform satisfactorily in the field.

End of Inductive Loop Detector Test.

F. Magnetometer Detector - Operational Test

1. Connect 2 sensing elements per channel. Secure the sensing elements at a depth and angle as described in the manufacturer's instruction manual. Connect 250 feet of lead-in cable in one inch metal conduit. After initial installation of lead-in cable, the conduit shall be filled with water.

2. Make proper connections and simulate transient voltages, voltage drops, passing vehicles per D-1 thru D-4.

3. Place the detector switch into the presence mode.

4. Drive a Honda 100 motorcycle within one foot (horizontal) of the sensing element at a speed of 10 mph. The detector shall indicate the presence of the vehicle only for the duration the vehicle is in the "detection zone".

5. Park the Honda within the "detection zone". The Honda shall be detected for as long as it is parked in the "detection zone".

6. Drive an automobile over the sensing element, or one foot to the side. The detector shall indicate the presence of the vehicle only for the duration the vehicle is in the "detection zone".

7. Place the detector switch into the pulse mode. Drive over the "detection zone" with the Honda or automobile. Verify that one output closure of 30 to 50 milliseconds is provided for each evhicle passing over the "detection zone".

8. Repeat steps F-3 thru F-8.

9. Environmental Test -- Place the sensor unit into the environmental chamber at 0°F and allow the detector to stabilize for 2 hours. Repeat steps F-3 thru F-9.

ClibPDF - www.fastio.com

10. Repeat F-10 at 160°F.

11. Perform any other tests deemed necessary to verify the unit's compliance with the specification requirements and that it will perform satisfactorily in the field.

End of Magnetometer Detector Test.

G. Magnetic Detector Test

1. Install the sensing element as shown in ES-5B. Connect 750 feet of lead-in cable in one inch metal conduit. After initial installation of lead-in cable, the conduit shall be filled with water.

2. Make proper connections and simulate transient voltages, voltage drops, passing vehicles per D-1 thru D-4.

3. Adjust the sensitivity of the unit per manufacturer's instruction.

4. Drive a Honda 100 motorcycle over the sensing element and within 18 inches (horizontal) of either end of the sensing element at 3 mph or faster. The Detector shall provide one output closure.

5. Drive an automobile over the sensing element and within 18 inches (horizontal) of either end of sensing element, at 3 mph or faster. The detector shall provide one output closure.

6. Environmental Test -- Place the amplifier into the environmental chamber at 0°F and allow the unit to stabilize for 2 hours. Repeat steps G-4 and G-5.

7. Repeat G-6 to 160° F.

8. Perform any other tests deemed necessary to verify the unit's compliance with the specifications and that it will perform satisfactorily in the field.

End of Magnetic Detector Test.

References

A California Method
California Standard Specifications
Test Method No. Calif. 667

End of Test on Calif. 675-A

ClibPDF - www.fastio.com

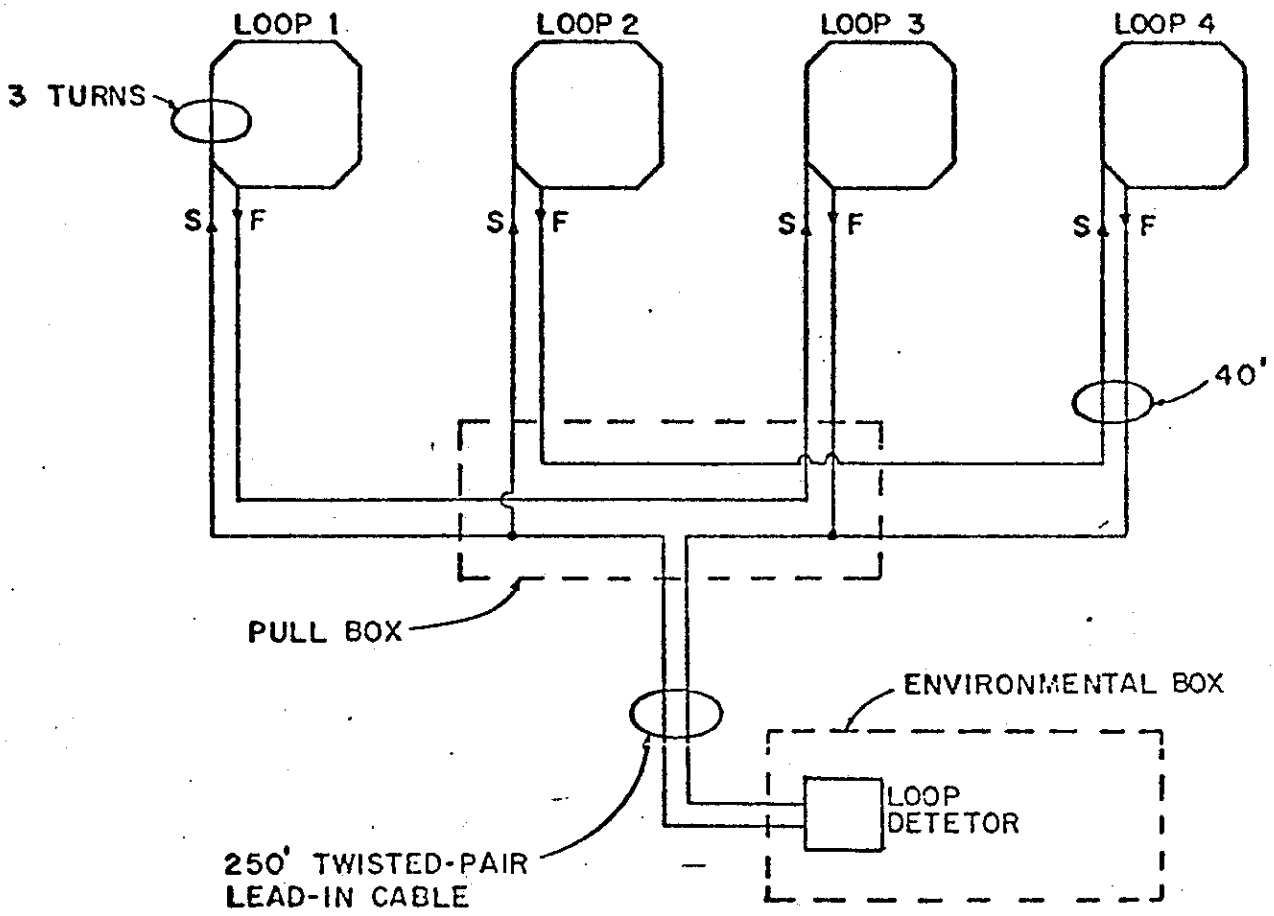

Figure 1

ClibPDF - www.fastio.com

V. EFFECT OF VARIOUS SWITCHING DEVICES

Introduction

A new "Soft-Start" solid state switching device for switching traffic signal lights was marketed as early as 1971. The manufacturer claimed that using his "Soft-Start" switches would extend the traffic signal lamp life several times that of the present lamp life achieved by using other solid state or relay tape switching devices.

The purpose of this study was to verify the validity of the claim and any advantages the unit may offer.

Conclusions

1. The "Soft-Start" solid state switching device tested does not, as claimed by the manufacturer, increase the life of traffic signal lamps 2 or 3 times that normally expected with conventional "hard" switching.

2. In fact, the "Soft-Start" does not increase lamp life at all. It does, however, essentially eliminate the normal 15 to 20% decrease in lamp life caused by "hard" switching.

Implementation

1. A chart was developed to show the comparison between "Soft-Start", conventionally switched, and steady burning lamps.

2. "Soft-Start" solid state switching devices were not adopted. The minor increase in lamp life does not compensate for the significant cost increase that would result.

ClibPDF - www.fastio.com

Discussion

The study showed a gross exaggeration. The "Soft-Start" solid state does not increase lamp life 2 or 3 times as was claimed by the manufacturer. However, it does eliminate the 15 to 20 percent decrease in lamp life caused by "hard" switching.

We do not feel the slight increase in lamp life warrants any additional price to be paid for these units. Traffic signals are generally maintained and the lamps replaced at predetermined intervals so the additional lamp life will not be a significant benefit.

Furthermore currently produced solid state switches are provided with "zero" voltage turn-on. These units were not available at the time the study was made, therefore they were not included in the study. Somewhat like the "Soft-Start" switches these units do lower the lamp starting current because these units turn on the lamp when the voltage waveform is passing through zero volts. This results in reducing the magnitude of lamp life reduction due to switching. These "zero turn-on" solid state switches are now commonly furnished in current traffic controller designs.

ClibPDF - www.fastio.com

EFFECT OF VARIOUS SWITCHING DEVICES ON LAMP LIFE

Test Procedure

Total of 118 lamps were used for this test.

40 lamps were burned steady.

20 lamps were switched on and off with a relay.

20 lamps were switched on and off with Automatic Signal SCR-4 solid-state relay.

38 lamps were switched on and off with Multi-sonic "Soft-Start" SS44 solid-state switch.

The switched lamps were on 20 seconds and off 20 seconds. Voltage to the lamps was measured and a log of lamp burnouts was kept.

The following lamp voltages were recorded:

Steady burning lamps	124.5 volts
Relay switched lamps	124.5 volts
SCR-4 switched lamps	124.0 volts
SS44 "Soft-Start" switched lamps	123.5 volts

Analysis of Results and Conclusions

The curve B of the attached graph indicates the rated lamp life of the steady burning lamps to be 1230 hours (50 percent of the lamp still surviving).

ClibPDF - www.fastio.com

The curve D shows rated lamp life of 1054; a lamp life decrease of about 17 percent from the steady burning lamps when lamps are switched on and off with a relay switch.

The curve C indicates a lamp life of 1137 hours; however, it is noted that the voltage to the lamp is 124.0 volts, a 0.5 volt drop from the lamp voltages of the steady burning or relay switched lamps. If the lamp voltage was 124.5 volts, the curve would move to the left and the lamp life would be 1080 hours about the same as the relay switched lamps.

The rated life of the "Soft-Start" switched lamps (Curve A) is 1366 hours, about 30 percent more than the relay switched lamps; the voltage to the "Soft-Start" switched lamps was 123.5 volts due to a one-volt drop across the triacs. Therefore, the light output of the "Soft-Start" switched lamps was about 3 percent less than the relay switched lamps. If we adjust the voltage to the "Soft-Start" switched lamps so that the light output will be the same as the relay switched lamps, then the lamp life will be 1229 hours, and only about 17 percent more than the relay switched lamps.

Although the "Soft-Start" switching does not increase lamp life by 2 to 3 times as claimed, it eliminates the 15 to 20 percent decrease in life caused by "hard" switching by applying half the line voltage for 1/10 second before applying full line voltage to the lamp filament. Thus, the lamp filament is heated so that when the line voltage is applied inrush current is of lower magnitude than when the lamp filament is cold.

ClibPDF - www.fastio.com

LAMP MORTALITY CURVES FOR VARIOUS SWITCHING DEVICES

LAMP GROUP	VOLTAGE TO LAMP	RATED LIFE UNCORRECTED (50% SURVIVORS)	CORRECTION FACTOR FOR VOLTAGE	RATED LIFE CORRECTED
A	123.5V	1366 hrs.	0.90	1229 hrs.
B	124.5V	1230	1.00	1230
C	124.0V	1137	0.95	1080
D	124.5V	1054	1.00	1054

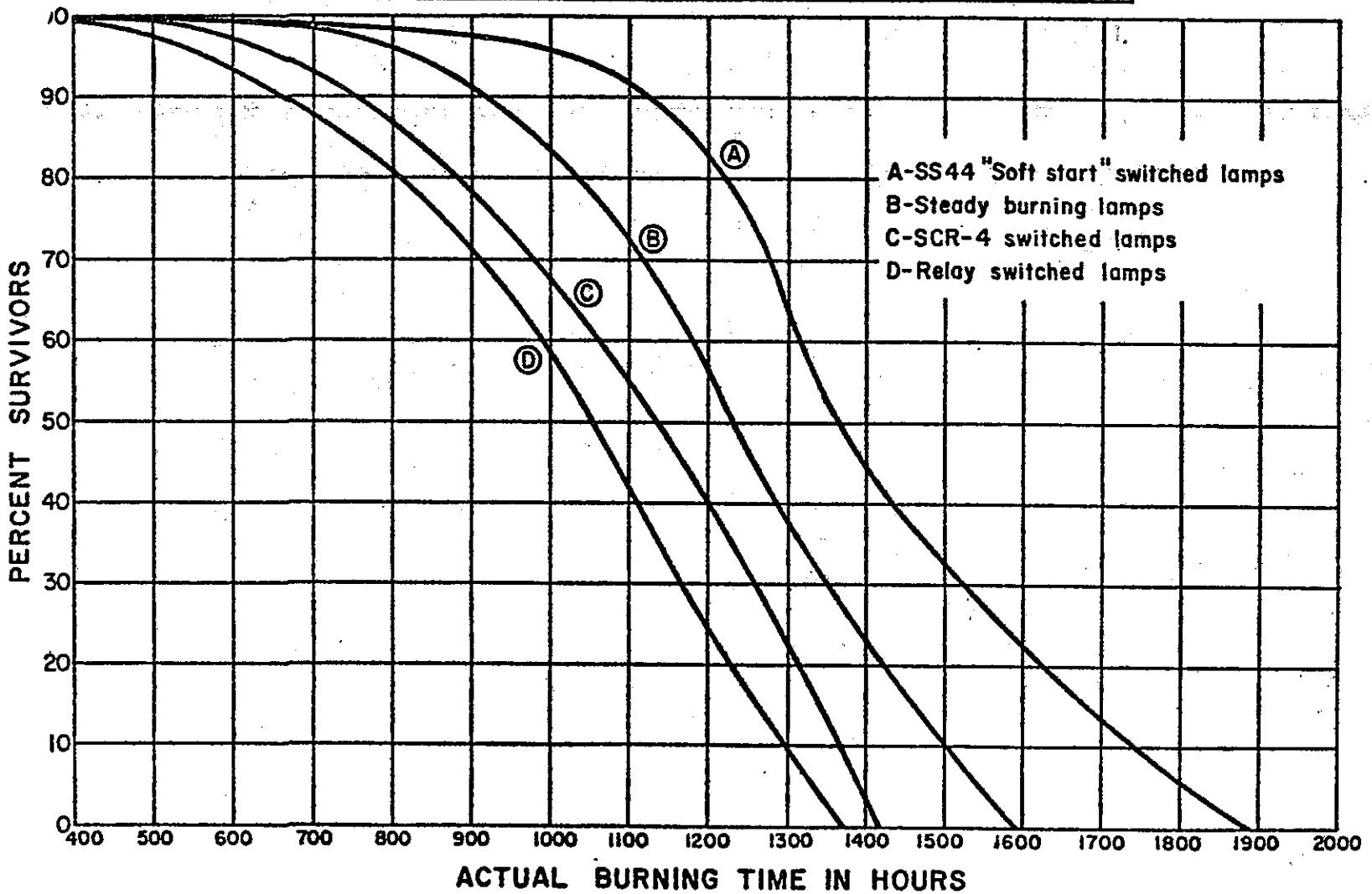

ClibPDF - www.fastio.com

ClibPDF - www.fastio.com

ClibPDF - www.fastio.com