M&R
RFS/5-62

4211

STATE OF CALIFORNIA
DEPARTMENT OF PUBLIC WORKS
DIVISION OF HIGHWAYS

A REPORT ON THE INVESTIGATION OF THE CORROSION AT LONG BEACH STATE COLLEGE

LIBRARY COPY
Materials & Research Dept.

May 1962

62-31

ClibPDF - www.fastio.com

State of California
Department of Public Works
Division of Highways
Materials and Research Department

May 1962

Lab. Proj. Auth.
72--Q--6261

Mr. Francis J. Flynn
Administrative Dean -- Development
Long Beach State College
Long Beach 15, California

Attention: Mr. C. L. Stapp, Chief of Plant Operations

Dear Mr. Flynn:

Submitted for your consideration is:

A REPORT ON

THE INVESTIGATION OF THE CORROSION

AT LONG BEACH STATE COLLEGE

Study made by . . . . . Structural Materials Section
Under general direction of . . . . . J. L. Beaton
Work supervised by . . . . . R. F. Stratfull
Report prepared by . . . . . R. F. Stratfull and G. R. Steffens
Field work by . . . . . G. R. Steffens

Very truly yours,

F. N. Hveem
Materials and Research Engineer

By J. L. Beaton
Supervising Highway Engineer

RFS/GRS:mw
Attach.

LIBRARY COPY
Materials & Research Dept.

ClibPDF - www.fastio.com

TABLE OF CONTENTS

		Page
I.	INTRODUCTION AND HISTORY	1
II.	SUMMARY AND CONCLUSIONS	2
III.	RECOMMENDATIONS	2
IV.	TESTS	3
	A. Pipe to Soil Measurements	
	B. Electrical Resistivity of the Soil	
	C. Miscellaneous Tests	
V.	DISCUSSION	4
	A. Electrical Interconnection of Underground Pipe to Buildings	
	B. Soil Corrosivity	
	C. Influence of Stray Currents Upon Underground Piping Systems	
	D. Cathodic Protection	
VI.	TENTATIVE SPECIFICATIONS	8
	A. General	
	B. Schedule for the Installation of the Cathodic Protection Systems	
	C. Materials and Techniques of the Installations	
	D. Maintenance of a Cathodic Protection System	
VII.	CATHODIC PROTECTION COST ESTIMATES	16
	Plans "A" through "D-2" Cathodic Protection and Pipe Replacement Costs	
VIII.	APPENDIX	25
	A. Method for Measuring Pipe to Soil Potentials	
	B. Equipment for Pipe to Soil Potential Survey	
	1. Rectifier and Check Point Record	25A
	2. Leak Record Form	25B
	C. Copper Sulfate Half-Cell	
	D. Exhibits	
	I. Leak Frequency Curve	
	II. Equi-Resistivity Contour Plan	
	III. Equi-Potential Contour Plan	
	IV. Continuity Plan for Cathodic Protection of Gas Lines and Fuel Oil Tanks	
	V. Detail of Current Test Station	
	VI. Installation Details of Impressed Current Anodes	
	VII. Installation Details of Galvanic Anodes	
	VIII. Cathodic Protection Cable Splicing Detail	
	IX. Section View of Copper Sulfate Half-Cell	

ClibPDF - www.fastio.com

I. INTRODUCTION AND HISTORY

On August 3, 1960, Mr. Francis J. Flynn, Administrative Dean--Development, Long Beach State College, requested by letter that the Materials and Research Department perform a corrosion survey at the Long Beach State College in Long Beach, California. Authorization to perform the survey was granted in November 1961 under Interagency Agreement 1350. It was requested that a corrosion survey be made to determine the extent of the corrosion problem as well as recommendations for the purpose of minimizing the corrosion of the underground pipe installations.

Historically, Long Beach State College is a new facility, the majority of the campus being constructed within the past five years. The first instance of leaks occurred early in 1960 when several gas leaks were detected. Since that time the number of leaks has increased sufficiently to present a definite maintenance economic problem. A record of gas leaks was kept by the maintenance department of the college and from that data a leak frequency curve was drawn and is included herein as Exhibit I.

A corrosion survey was made at Long Beach State College during the month of December 1961 by a representative of the Materials and Research Department. The results of this survey are included in this report.

ClibPDF - www.fastio.com

II. SUMMARY AND CONCLUSIONS

The corrosion problem can be attributed to the following factors:

1. The primary cause of corrosion is the presence of highly corrosive soils.

2. An accelerating factor of the corrosion rate of the pipe is its electrical interconnection to other pipe and to the subsurface concrete embedded reinforcing steel contained in the buildings.

Because of the highly corrosive soil, the perforation of the gas lines will continue even if they are electrically disconnected from other pipe and the buildings. Exhibit I, Leak Frequency Curve, indicates that during 1962, 15 additional leaks can be expected in the gas lines.

A corrosion survey of the water system was not performed as financing was not available to conduct a survey of both systems concurrently.

The corrosion problem can be alleviated by placing the underground pipe under cathodic protection or by replacing it with a material that is more corrosion resistant than steel.

III. RECOMMENDATIONS

It is recommended that:

1. All underground gas lines and fuel oil tanks be placed under cathodic protection as soon as possible to prevent additional structural damage.

2. Consideration be given to placing all or part of the water system under cathodic protection.

3. All underground pipe that is placed under cathodic protection be electrically disconnected from all buildings and electrical facilities.

ClibPDF - www.fastio.com

IV. TESTS

A. Pipe to Soil Measurements

The discharge and accumulation of current on a corroding structure is normally detected by means of a high resistance voltmeter of at least 100,000 ohms per volt and a standard copper sulfate half-cell. Pipe to soil potentials were measured on the entire underground gas system and the results are shown on Exhibit III, Equi-Potential Contour Plan. Points of current discharge (those locations that show a high potential or voltage) are anodic and are designated as locations of future leaks. Points of current accumulation, with lower potential, are normally cathodic and will not corrode at a rapid rate. Current will flow between the anodic and cathodic areas. As shown on Exhibit III, there are 29 locations where leaks can be expected in the gas lines.

B. Electrical Resistivity of the Soil

The electrical resistivity of the soil at Long Beach State College is shown on Exhibit II, Equi-Resistivity Contour Plan. As indicated by Exhibit II, the soil varies from 500 ohm-cm to 21,000 ohm-cm. Because of the low soil resistivity values, the soil is considered to be highly corrosive to metal pipe and is borne out by the fact that the leaks in the pipe are occurring in these areas of low soil resistivity.

C. Miscellaneous Tests

1. Electrical continuity tests were performed on the entire underground gas system. Points of detected electrical discontinuity are noted on Exhibit IV. These points are at the locations of the insulating couplings installed in the gas lines that were excavated by maintenance personnel. An electrical discontinuity was detected in the 2" gas line located behind the gymnasium and the swimming pool area. The location of the discontinuity is shown on Exhibit IV.

2. Current flow measurements made on the 5" gas line between the southwest corner of the building designated as Science #1 to the southwest corner of the Fine Arts #4 Building verified that the electrical interconnection of the lines to the buildings can cause a flow of electrical current. A detail showing these current measurements and direction of flow are noted on Exhibit III and outlined in the discussion of this report.

3. Field tests were performed to determine the current requirements for cathodic protection on the underground water and gas installations. Under the test conditions, measurements indicated that approximately 0.0005 amperes per square foot of the surface area of the underground gas and water piping could be adequate to protect the pipes from future corrosion damage.

ClibPDF - www.fastio.com

V. DISCUSSION

A. Electrical Inter-connection of Underground Pipe to Buildings

At other State facilities it has been observed that the current requirements for cathodic protection would be increased by 500% to 1000% when the underground pipe is electrically connected to relatively large and numerous buildings that contain concrete embedded steel that is at or below ground level. For this reason it is necessary that all piping to receive cathodic protection be electrically insulated from buildings containing concrete embedded steel.

B. Soil Corrosivity

Field tests show that the over-all average resistivity of the soil is approximately 2000 ohm-cm and the pH or hydrogen-ion concentration is 8.4. By means of an empirical soil test it is estimated that the probable life of a standard 5" diameter gas pipe in this soil would be about 100 years. The probable life of a 5" diameter gas pipe in the corrosive areas where the soil resistivity is as low as 150 ohm-cm is estimated at 10 years.

C. Influence of Stray Currents Upon Underground Piping Systems

Field tests indicate that stray electrical currents are flowing through the soil and are collecting and discharging on the gas lines. Stray currents were indicated in the upper campus area at various locations on the gas lines by a fluxuating pipe to soil potential reading. The source of the stray currents was not determined. Whenever there is current flow in the earth, a buried pipe (in this case the pipes at the college) may function as a part of the current path, collecting and discharging the current, with subsequent corrosion at the points of discharge.

The severity of the attack is a function of the resistivity of the soil and the uniformity of the pipe coating. A good pipe coating does not insure against damage to the pipe by stray currents because all pipe coatings have "holidays" or a relatively minor number of perforations. It is just that some pipe coatings have more holidays than others. A pipe coating will reduce the over-all total damage that could be done to a pipe. However, the holidays will concentrate the stray or other "natural" currents at these locations and will seemingly accelerate the penetration or corrosion rate of the pipe.

If uncontrolled cathodic protection currents are applied to the pipes at the college, they could produce harmful stray currents which could affect foreign piping. For instance, the Long Beach Water & Gas Company's 8" diameter gas main servicing the college could be damaged by stray current. Therefore, before the cathodic protection system at the college is permanently activated, cooperative tests should be made with the city of Long Beach Water and Gas Company to determine what steps shall

ClibPDF - www.fastio.com

be taken to eliminate any adverse effects upon their line. For instance, resistors could be installed to bleed enough current to the city gas main to prevent stray current damage to the city gas line.

D. Cathodic Protection

Cathodic protection is a common engineering practice and, if installed and maintained properly, will effectively control the corrosion of the underground piping installations.

At this facility it would be hazardous to install one large size cathodic protection facility because of the increasing possibility of stray electrical currents which could cause damage to privately owned pipe beyond the limits of the college. The mechanics of stray electrical current damage to pipe is described in Section C of this discussion. In addition, there would be an abnormal increase in the cost of the cathodic protection facilities.

There are six alternative plans for placing the piping at Long Beach State College under cathodic protection. An outline of each plan that was considered is as follows:

Plan "A" - Impressed current cathodic protection of all water, gas, fuel oil and air lines and elevator casings.

Plan "B" - Impressed current cathodic protection of all water, gas, fuel oil and air lines in upper campus, which is low resistivity area. Cathodic protection of all gas and fuel oil in lower campus area. Cathodic protection of all elevator casings.

Plan "C" - Impressed current cathodic protection of all water, gas, fuel oil and air lines in area of past leaks (maximum corrosive area), located in upper campus. Cathodic protection of all gas and fuel oil lines in lower campus area. Cathodic protection of all elevator casings.

Plan "D" - Impressed current cathodic protection of all gas and fuel oil lines and elevator casings throughout the campus.

Plan "D-1"- Cathodic protection of gas lines only, using sacrificial galvanic anodes.

Plan "D-2"- Impressed current cathodic protection of gas lines and fuel oil tanks only.

Due to the extensive and costly preparations for reproducing the working drawings into a formal set of plans for all of the outlined plans, only the drawings for Plan "D-2" are submitted with this report. Working drawings for all plans are on file at the Materials and Research Department and will be forwarded at the request of the college.

ClibPDF - www.fastio.com

The tentative specifications outline the procedure for the installation of all of the considered plans for cathodic protection.

The cost of cathodic protection facilities and also pipe replacement are included in Section VII. In this study it was considered that the protection of the gas lines is of primary importance due to safety hazards and economic losses involved when perforations of the pipe occur. For the cathodic protection of the facilities other than the gas lines a recommendation was not submitted because of the tests involved and also an investigation of other facilities was not made.

The present condition of water pipe in the highly corrosive areas should be investigated. Exhibit II, Equi-Resistivity Contour Plan, shows six locations in the highly corrosive areas where the water pipe should be exposed and inspected. This will indicate in what condition the water piping is and if cathodic protection would be economically feasible if it is applied to the water lines. The inspection should be performed by maintenance personnel and consideration given to the external and internal conditions of the pipes. The internal condition of the water pipes need not be inspected at the points indicated on Exhibit II and may be performed at more accessible locations.

If the internal surface of the pipes indicates relatively serious deterioration due to a corrosive water, then penetration depth should be measured. Knowing penetration depth, age of the pipes, and wall thickness of the pipes, a time to failure can be determined. Corrosion protection of the external surface of the pipe may be economically without value if the pipe should fail internally. Internal protection of a water pipe from corrosion can be alleviated by water treatment.

Cathodic protection, to operate effectively, must have all high resistance joints or discontinuities eliminated from the system. The system to be placed under cathodic protection must be electrically continuous within itself and electrically isolated from all other foreign piping systems and buildings.

It is probable that a few leaks will appear in the piping soon after the application of cathodic protection. The reason for the occurrence of "new" leaks is that the pipe may be so corroded that the corrosion products are acting as a temporary "plug". When cathodic protection currents are applied, hydrogen gas is evolved on the surface of the pipe. This gas originates between the metal surface and the rust, and the rust will be mechanically loosened due to the formation of the gas. If the rust is acting as a "plug", the loosening of this plug, by hydrogen gas evolution, will result in a leak in the pipe.

If a leak is found in the piping system near a pipe joint or other pipe, it is good field practice to measure the pipe to soil potential and if necessary electrically bond the pipe sections together as a standard repair procedure.

ClibPDF - www.fastio.com

To operate effectively, a cathodic protection system should be kept at a minimum of 0.85 volts negative to a saturated copper sulfate half-cell. This pipe to soil potential is indicative of a properly functioning cathodic protection system. The potential of a pipe system under cathodic protection will change for a period of about two to four weeks at which time it becomes polarized. Thereafter, the system should require only a minor readjustment. Further adjustments of the cathodic protection system should only be required when the resistivity of the soil drastically changes, additions are made to the underground pipe systems or if the pipe coating deteriorates or absorbs moisture.

To insure that the potential remains within a safe level of protection, monthly pipe to soil potential checks should be made. It cannot be emphasized too greatly the importance of these checks, and if not conducted assiduously, the concept of cathodic protection system should be abandoned. The reasons for this are (1) that the cathodic protection system will not control the corrosion of the pipe if not properly adjusted, and (2) there is a possibility that the electrical cathodic protection currents could corrode underground pipe both on and beyond the limits of the site. The latter could occur because of an electrical discontinuity in the existing pipe or by the installation of new metallic pipe that is not electrically bonded to the cathodic protection system. These checks could be made by the college maintenance personnel who have been trained in the use of the copper sulfate half-cell and high resistance voltmeter. The college should purchase or make available the equipment necessary to measure the monthly pipe to soil potentials. The personnel selected by the college to operate the equipment can be trained by a representative of the Materials and Research Department.

The Method for Measuring the Pipe to Soil Potential and the equipment required for performing the Pipe to Soil Potential Survey are described and are included in the Appendix.

ClibPDF - www.fastio.com

VI. TENTATIVE SPECIFICATIONS

A. General

The following specifications for the size, number, and locations for the rectifiers and anode beds that were selected for estimating the cost of the cathodic protection system are considered to be tentative for the following reasons:

1. The required current that was estimated to be necessary to place the pipe under cathodic protection was determined from tests on relatively short but electrically isolated sections of pipe. As a result, these tests will not necessarily indicate the total amount of current required as the condition of the pipe coating in other areas of the college may be different than that section placed under test. This fact is illustrated by the current required for the cathodic protection which is being applied by the Long Beach Water and Gas Co. to their 8" diameter gas pipe that is located on the college property. This 8" gas line requires 0.00001 amperes per square foot of pipe surface for corrosion control while the college pipe requires 50 times that amount. This factor was considered in the estimated current requirements for the gas line. By test, the current required for cathodic protection of the gas line was 0.0005 amperes per square foot of pipe surface. For estimating purposes, 0.0010 ampere per square foot was utilized which gives a safety factor of two.

2. When parallel runs of underground pipe are in close proximity, the physical presence of an adjacent pipe can electrically shield and reduce the amount of cathodic protection current that a nearby pipe will receive. For this reason some pipe will receive an unequal quantity of current and the level of protection of all of the pipes will not be equal. As a result the sizes, locations, and the number of anodes and rectifiers shown on the cost estimates, specifications, and Exhibit II can only be considered tentative until verified by further tests. All of the details outlined in the specifications are not considered to be tentative but are considered to be necessary for the installation and maintenance of the cathodic protection system.

   The following are the criteria that were used in determining the cost and methods for corrosion control:

   a. That the underground pipe would be placed under cathodic protection as soon as possible.

   b. That installation of insulating couplings, galvanic anodes, jumper and bonding wires be accomplished by the maintenance department at the college.

ClibPDF - www.fastio.com

c. The gas and water piping be insulated on the soil side and above ground, if possible, at every building throughout the college.

d. All fuel oil tank supply and return lines be insulated on the soil side of each building and all lines between the insulator on the building be contained in a suitable structure so that there will not be direct soil contact of that section of the pipe that is between the insulator and wall of the building.

e. All automatic sprinkler controllers be insulated from the water lines by insulating couplings installed on the riser as it enters the controller; also any copper control tubing not already insulated shall have insulating couplings installed at the controller.

f. Insulate water lines at the air conditioning unit that services the new administration wing.

g. All underground pipe made electrically continuous.

h. A standard copper sulfate half-cell and a millivoltmeter be purchased by the school so that the maintenance personnel (who have been trained) may make the necessary monthly checks on the operation of the system.

i. That a complete pipe to soil potential survey be made between 30 days and 6 weeks after the installation of the new cathodic protection system and once a year thereafter.

j. That all utility companies that have distribution lines in the area be notified in writing of the State's intentions to establish a cathodic protection system.

k. That pipe placed under cathodic protection would require 0.0005 amperes per square feet of surface area.

B. Schedule for the Installation of the Cathodic Protection Systems

The following schedule of the installation of the corrosion control facilities is applicable to all plans for cathodic protection. Only those phases of the schedule that are applicable to the plan under consideration should be used.

1. Electrically insulate the following facilities at the soil side of all buildings where any pipe enters or leaves the building and other locations as indicated.

ClibPDF - www.fastio.com

a. Interruptible and non-interruptible gas.

b. Water services.

c. Chilled water supply and return lines.

d. Hot water supply and return lines.

e. Fuel oil supply and return lines.

f. All air lines.

g. All copper control tubing servicing remote control valves from automatic sprinkler controllers.

h. All automatic sprinkler controllers at point where the ½" line servicing the controller enters the controller.

   1. If a pipe cannot be insulated above ground, as in the case of the fuel oil lines, the ground around the pipe close to its entrance to the building should be excavated; a redwood or concrete box barrier installed around the insulating coupling to keep the soil from contacting that section of pipe which would be between the insulating coupling and the building. Coat this short section of pipe with a polyethylene or polyvinyl tape coating to reduce the possibility of corrosion.

i. At all connections of copper to steel pipe.

j. At all connections between State piping and those of private utilities.

k. At the junction of all cast iron and steel pipe.

2. Install current test stations as outlined below:

   a. Engineering Wing: run jumper wire from gas line through basement of Engineering Wing to fuel oil tank servicing the Engineering Wing. Install current test station between rick well and jumper wire as noted on Exhibit IV. Locations of current test stations between intersections of gas and water lines are not noted on Exhibit IV. The number and location of additional current test stations is dependent upon which method of cathodic protection is installed and should be determined by test.

   b. Administration Building: install current test station between gas line and rick well as noted on Exhibit IV. Details of current test station are shown on Exhibit V.

ClibPDF - www.fastio.com

3. Electrically bond together and install jumpers on water and gas lines and fuel oil tanks. Bonding and jumper locations of gas lines and fuel oil tanks are noted on Exhibit IV. Bonding and jumper wire locations for the water lines are too extensive to be included in this report. Upon selection by the college of the extent of cathodic protection, complete installation plans will be forwarded to the college. The following general procedures govern the locations of bonding and jumper wires:

   a. Bond all steel pipes (gas, water or fuel oil) at points of intersection.

   b. Where two or more pipe runs are parallel in the same trench or within approximately 5 feet, install an electrical jumper every 500 feet.

   c. Bond across all insulating couplings installed below ground in the piping systems.

   d. If chilled water supply and return lines or hot water supply and return lines are enclosed within metallic conduit or rick well, perform jumper bond connection between conduit and nearest continuous water or gas line. A current test station should be inserted in the bond or jumper.

   e. If chilled water supply and return lines or hot water supply and return lines are enclosed within a concrete pipe or box, perform bond or jumper connection by bonding each line within the concrete pipe or box together and then bonding these pipes to the nearest continuous water or gas line.

   f. Bond section of ½" water line servicing the automatic sprinkler controllers, between the insulating coupling and main line, to the nearest continuous water or gas line.

   g. All isolated sections of irrigation piping should be bonded or jumpered to the nearest continuous water or gas line.

   h. Bond across all remote control valves in the irrigation system.

4. At this point of the installation, an electrical continuity survey should be made to determine if the water system is electrically continuous.

   a. If needed, install additional bonding and jumper wires.

   b. Perform cathodic protection current requirement tests to determine the locations and sizes of the rectifier and number of anodes.

ClibPDF - www.fastio.com

5. Install rectifiers and anodes.

6. After installation of rectifiers and anodes, tests should be performed to determine if the entire piping system is under the proper level of cathodic protection, the size of bleeder resistors to be installed at interference check points, and if necessary any additional bond or jumper wires should be located and installed.

7. Perform cooperative tests with the Long Beach Water & Gas Company to establish interference check point at intersection of the 8" gas service main and the college's interruptible and noninterruptible gas lines.

8. Determine the location of permanent cathodic protection check points.

C. Materials and Techniques of the Installations

1. Impressed Current Protection

a. Tentative rectifiers -- Plans A, B, C

1. Gas and water systems and fuel oil tanks	Good-all Type N40-12 or equal
2. Elevator casings (also for Plan D)	Good-all Type N18-3 or equal

b. Tentative rectifiers -- Plans D and D-2

1. Gas system and fuel oil tanks	Good-all Type N28-12 or equal

The rectifiers shall perform satisfactorily at maximum output at an ambient temperature of 130° F. The unit shall have built-in input and output overload protection.

A D.C. ammeter with suitable range switching shall be installed. The scale ranges of such an ammeter will not exceed 140% of the rated output reading of each selenium stack.

The entire installation shall be mounted in a vandal-proof enameled steel box of code gauge thickness. The box shall have a locking cover and padlock, and it shall be suitable for wall or bench mounting.

Anodes

The impressed current anode shall be "Duriron" 2" x 60" Type D-LO high silicon cast iron anodes, or equal high silicon cast iron anodes with five feet of A.W.G. #8 oil resistant waterproof cable or equal.

ClibPDF - www.fastio.com

Anode Backfill Materials

The anode backfill material shall be Coal Coke Breeze or equal graded to #8 mesh particle size less than 10% dust content.

Installation of Anodes

Impressed current anodes shall be placed at the designated locations in the following manner. Anode installation details are shown on Exhibit VI.

1. Auger or otherwise construct an anode hole of 10" in diameter 10' below the grade of the existing ground.

2. Fill bottom of hole with coke breeze backfill material to a compacted depth of 1', which is 9' below grade.

3. Center anode carefully in hole and add coke breeze backfill material in one foot compacted layers until the backfill is approximately one foot above anode.

4. After making electrical connections, as shown on Exhibit VIII, backfill the remainder of the hole with sand. Top soil may be used in the top six inches.

Wiring

Standard copper anode lead wire shall be General Electric VERSATOL GEOPREME Type USE, style RR 600 volt #2/0 direct burial cable or equal.

All "in line" splices and all splices of the anode lead wires to the feeder lines shall be brazed or made with the Cadweld process or equal.

All underground wire splices shall be adequately protected from current leakage through the soil by using a Scotch-Cast Splicing Kit containing No. 4 resin or equal.

The main feeder wire from the rectifier to the anode beds and pipe shall be buried at least two and a half feet below the original ground or at a depth which will insure protection of the wire from accidental severance by cultivation or excavation.

The main feeder wire from the rectifier to the anode beds shall be encased in conduit to the specified depth of burial of anode wire. The length of conduit shall be sufficient to protect the feeder wire from tampering or accidental severance and will traverse the distance between the rectifier and that point where the wire is buried at specification depth.

ClibPDF - www.fastio.com

Suggested Cathodic Protection Material Suppliers:

Harco Corporation
P.O. Box 7026
16901 Broadway Ave.
Cleveland 28, Ohio

Electrical Facilities, Inc.
1307 66th Street
Emeryville, California

Frost Engineers Service Co.
P. O. Box 767
Huntington Park, Calif.

The Pipeline Protection Co.
420 Market Street
San Francisco 11, Calif.

Corro. Ban Products Co.
3579 E. Gage Ave.
Bell, California

Pipe Line Anode Corp.
Box 996
Tulsa, Oklahoma

Pipeline Coating & Eng. Co.
5501 South Santa Fe Ave.
Los Angeles 58, California

Vanode Corporation
880 East Colorado St.
Pasadena 1, California

Farwest Corrosion Control Corp.
1000 E. 220th Street
Torrance, California

Jumpers and Bonding Wires

Jumpers and bonding wires shall be welded by Cadweld process or brazed to water piping. Jumper and bonding wires on gas lines shall be attached by means of ground clamps. After the wires are connected to the gas or water lines, Pro-Seal No. EP-711B-2 shall be applied to the weld or ground clamp connections and approximately 3" up along the wire itself.

2. Galvanic Protection

Sacrificial Anodes - Galvanic

Dow Type 32-D galvo-pak (Galvo-Mag) magnesium anodes with 15 foot length of lead wire.

a. Placement of Anodes and Shunt

1. Place anode from 5' to 10' from the pipe and auger 8" diam. hole 5' 6" deep.

2. Place anode in hole and compact soil around and to the top of the anode so that the anode is firmly contacting soil on all sides.

3. Moisten anode with water until air bubbles cease to rise to the surface of the water.

4. A shunt metering box is placed between the anode and pipe and installed level with the grade as noted on Exhibit VII.

ClibPDF - www.fastio.com

b. Excavate trenches 12" deep by 3" (min.) wide from anode to gas pipe for placement of the anode lead wire.

NOTE: The electrical connection of the magnesium anode lead wire to the pipe will automatically result in a flow of electrical current. The magnesium anode will be inside a cloth sack and surrounded by a special backfill material. (Do not open or cut the cloth sack; embed the entire unit in the anode hole.)

Miscellaneous

Miscellaneous materials can be purchased from the following companies:

Pull Boxes	Pro-Seal
Brooks Products, Inc. 2400 Adeline Street Oakland, California	Coast Pro-Seal & Mfg. Co. Los Angeles, California

D. Maintenance of a Cathodic Protection System

1. When new metallic pipe is to be installed, the influence of this pipe on the cathodic protection system be determined and, if necessary, the rectifier output be adjusted.

2. Take monthly pipe to soil potentials at locations determined after initial installation of cathodic protection system.

3. All new metal pipe that is installed should be coated with an AWWA specification coal tar enamel or with a 20 mil thickness of polyethelyene or polyvinyl chloride tape coating over pipe that has been coated with a suitable primer.

4. That any new piping installed underground at this site be non-metallic where it is mechanically feasible.

5. When coated steel pipe is to be installed, the pipe be back-filled with a sand or non-expansive soil for a minimum distance of 3 inches all around.

6. Where necessary, install a separate grounding system for the buildings. Do not ground electrical facilities to hose bibs or any sections of underground pipe.

ClibPDF - www.fastio.com

VII. CATHODIC PROTECTION COST ESTIMATES

1. Plan "A"

Description	Quantity	Unit Cost	Material Cost	Labor Hours
Rectifier - Good-all Type N40-12	13 each	$202.00	$2626.00	104
Anodes - Duriron 2" x 60"	52 each	18.00	936.00	104
Coke Breeze - 52 holes @ 250#/hole	13000#	5.25cwt	682.50	156
3/4" conduit	550 ft.	25.00cft	137.50	33
#2/0 Anode lead wire	3690 ft.	347.00mft	1280.43	119
#8TW Jumpers and Bonding Wires/Weld or clamp	700 each	5.00	3500.00	2100
Insulating Couplings	300 each	5.00	1500.00	900
Pro-Seal EP711B-2	235 kits	3.00	705.00	-
Scotch Cast Splicing Kit 82-A2 with #4 Resin (Wye)	39 each	6.50	253.50	20
Scotch Cast Splicing Kit 90-B1 with #4 Resin (in-line)	13 each	5.50	71.50	6
Current Test Station	3 each	16.00	48.00	32
Trench Excavation	2800 ft.	1.00/ft.	2800.00	112
52 holes (excavation)	52 holes	10.00	520.00	104
Misc. Wire & Elect. Parts	L. S.	500.00	500.00	-
			$15560.43	3790

ClibPDF - www.fastio.com

Plan "A" CATHODIC PROTECTION FOR ELEVATOR CASINGS

Description	Quantity	Unit Cost	Material Cost	Labor Hours
Rectifier - Good-all N18-3	5	$105.00	$ 525.00	40
Anodes, Duriron 3" x 60"	10	18.00	180.00	20
Coke Breeze, 10 holes @ 250#/hole	2500#	5.25cwt	131.25	30
3/4" Conduit	300 ft.	25.00cft	75.00	18
#2/0 Anode lead wire	500 ft.	347.00cft	173.50	16
Pro-Seal EP-711B-2	3 kits	3.00	9.00	-
Scoth Cast Splicing Kits 82-A2 with #4 Resin (Wye)	5 each	6.50	32.50	3
Scotch Cast Splicing Kits 90-B1 with #4 Resin (in-line)	5 each	5.50	27.50	3
Trench Excavation	300 ft.	1.00/ft.	300.00	12
Anode hole excavation	10 holes	10.00	100.00	20
			$ 1553.75	162

Total Materials - Impressed Current C.P. System	$ 15,560.43
Total Materials - C. P. System for Elevator Casings	1,553.75
Total Materials	17,114.18
Sales Tax 4%	684.57
Labor 3952 hrs. @ $5.50/hr.	21,736.00
Insurance (12½% of labor)	2,717.00
Engineering and Inspection	3,000.00
Sub-Total	45,251.75
20% Profit and Overhead	9,050.35
	54,302.10
Contingencies 15%	8,145.32
Total	$ 62,447.42
Say	$ 65,000.00

ClibPDF - www.fastio.com

2. Plan "B" IMPRESSED CURRENT COSTS

Description	Quantity	Unit Cost	Material Cost	Labor Hours
Rectifier - Good-all Type N40-12	8 each	$202.00	$1616.00	64
Anodes - Duriron 2" x 60"	32 each	18.00	576.00	64
Coke Breeze - 32 holes @ 250#/hole	8000#	5.25cwt	420.00	96
3/4" Conduit	400 ft.	25.00cwt	100.00	24
#2/0 Anode lead wire	1660 ft.	347.00mft	576.02	54
#8TW Jumpers and Bonding Wires/weld or clamp	400 each	5.00	2000.00	1200
Insulating Couplings	250 each	5.00	1250.00	750
Pro-Seal EP711B-2	135 each	3.00	405.00	-
Scotch Cast Splicing Kit 82-A2 with #4 Resin (Wye)	24 each	6.50	156.00	12
Scotch Cast Splicing Kit 90-B1 with #4 Resin (in-line)	8 each	5.50	44.00	4
Current Test Station	3 each	16.00	48.00	32
Trench excavation	1450 ft.	1.00/ft	1450.00	58
Anode holes (excavation)	32	10.00	320.00	64
Misc. Wire & Elect. Parts	L. S.	300.00	300.00	-
			$ 9261.02	2422

ClibPDF - www.fastio.com

Plan "B"

COST SCHEDULE FOR GAS IN DORMITORY AREA (GALVANIC ANODE CATHODIC PROTECTION)

Description	Quantity	Unit Cost	Material Cost	Labor Hours
Anodes - Type 32-D Galvo-Pak avg. wt. 80#, rating 2 amp yrs	8 each	$21.50	$ 172.00	8
Pull boxes - No. 3½ State Pull Boxes or equal (Concrete Box w/concrete cover)	8 each	5.55	44.40	16
0.01 ohm metering shunts	8 each	0.60	4.80	4
1½" ground clamps	8 each	1.07	8.56	4
Pro-Seal No. EP-711B-2	3 kits	3.60	10.80	-
Misc. Wire & Elect. Parts	L. S.	25.00	25.00	-
Insulating couplings	1 each	5.00	5.00	3
Trench excavation	80 feet	1.00/ft	80.00	4
Anode holes (excavation)	8 each	10.00	80.00	16
			$ 430.56	55

Total Materials - Impressed Current C. P. System	$ 9,261.02
Total Materials - Galvanic Anode C. P. System	430.56
Total Materials - C. P. System for Elevator Casings	1,553.75
Total Materials	11,245.33
Sales Tax 4%	449.81
Labor - 2639 hrs. @ $5.50/hr.	14,514.50
Insurance (12½% of labor)	1,814.31
Engineering and Inspection	3,000.00
Sub-Total	31,023.95
20% Profit and Overhead	6,204.79
Sub-Total	37,228.74
Contingencies 15%	5,584.31
Total	$ 42,813.05
Say	$ 45,000.00

ClibPDF - www.fastio.com

3. Plan "C"

Description	Quantity	Unit Cost	Material Cost	Hours Labor
Rectifier - Good-all Type N40-12	6	$202.00	$1212.00	48
Anodes - Duriron 2" x 60"	24	18.00	432.00	48
Coke Breeze - 24 holes @ 250#/hole	6000#	5.25cwt	315.00	72
3/4" Conduit	250 ft.	25.00cft	62.50	15
#2/0 Anode lead wire	1190 ft.	347.00mft	412.93	38
#8TW Jumpers and Bonding Wires/weld or clamp	200 each	5.00	1000.00	600
Insulating couplings	150 each	5.00	750.00	450
Pro-Seal EP711B-2	68 each	3.00	204.00	-
Scotch Cast Splicing Kit 82-A2 with #4 Resin (Wye)	18 each	6.50	117.00	9
Scotch Cast Splicing Kit 90-B1 with #4 Resin(in-line)	6 each	5.50	33.00	3
Current Test Station	3 each	16.00	48.00	32
Trench excavation	1000 ft.	1.00/ft	1000.00	40
Anode holes (excavation)	24 each	10.00	240.00	48
Misc. Wire & Elect. Parts	L. S.	300.00	300.00	-
			$ 6126.43	1403

Total Materials - Impressed Current C. P. System	$ 6,126.43
Total Materials - C. P. System for Elevator Casings	1,553.75
Total Materials - Galvanic Anode C. P. System	430.56
Total Materials	8,110.74
Sales Tax 4%	324.44
Labor - 1620 hrs. @ $5.50/hr.	8,910.00
Insurance (12½% of labor)	1,113.75
Engineering and Inspection	2,500.00
Sub-Total	20,958.93
20% Profit and Overhead	4,191.79
Sub-Total	25,150.72
Contingencies 15%	3,772.61
Total	$ 28,923.33
Say	$ 29,000.00

ClibPDF - www.fastio.com

4. Plan "D"

Description	Quantity	Unit Cost	Material Cost	Hours Labor
Rectifier - Good-All Type N28-12	5 each	$ 163.00	$ 815.00	40
Anodes - Duriron 2" x 60"	20 each	18.00	360.00	40
Coke Breeze, 20 holes @ 250#/hole	5000#	5.25cwt	262.50	60
3/4" conduit	200 ft.	25.00cwt	50.00	12
#2/0 anode lead wire	1170 ft.	347.00mft	405.99	38
#8TW jumpers & bonding wires/weld or clamp	75 each	5.00	375.00	225
Insulating couplings	100 each	5.00	500.00	300
Pro-Seal EP711B-2	25 kits	3.00	75.00	-
Scotch Cast Splicing Kit 82-A2 with #4 Resin (Wye)	15 each	6.50	97.50	8
Scotch Cast Splicing Kit 90-B1 with #4 Resin (in line)	5 each	5.50	27.50	3
Current test station	3 each	16.00	48.00	32
Trench excavation	1030 ft.	1.00/ft	1030.00	41
Anode holes (excavation)	20 holes	10.00	200.00	40
Misc. wire & elect. parts	L. S.	250.00	250.00	-
			$ 4496.49	839

Total Materials - Impressed Current C. P. System	$ 4,496.49
Total Materials - C. P. System for Elevator Casings	1,553.75
Total Materials - Galvanic Anode C. P. System	430.56
Total Materials	6,480.80
Sales Tax 4%	259.23
Labor 1056 hrs. @ $5.50/hr.	5,808.00
Insurance (12½% of labor)	726.00
Engineering and inspection	2,500.00
Sub-Total	15,774.03
20% Profit and Overhead	3,154.81
Sub-Total	18,928.84
Contingencies 15%	2,839.26
Total	$ 21,768.10
Say	$ 22,000.00

ClibPDF - www.fastio.com

5. Plan "D-1"

Description	Quantity	Unit Cost	Material Cost	Labor Hours
Anodes - Type 32D Galvo-Pak Avg. wt. 80#, rating 2 amp. yr.	134 each	$ 21.50	$ 2,881.00	268
Pull Boxes - No. 3½, State Pull Boxes or equal (concrete box w/concrete cover)	134 each	5.55	743.70	268
0.01 ohm metering shunts	134 each	0.60	80.40	67
Ground clamps	134 each	L.S.	150.00	67
Pro-Seal EP711B-2	45 kits	3.00	135.00	-
Insulating couplings	100 each	5.00	500.00	300
Trench excavation	1400 ft.	1.00	1,400.00	65
Anode holes (excavation)	134 holes	10.00	1,340.00	268
Misc. wire & elect. parts	L. S.	100.00	100.00	-
			$ 7,330.10	1303

Total Galvanic Anode C. P. System (for gas and fuel oil only)	$ 7,330.10
Sales Tax 4%	293.20
Labor 1303 hrs. @ $5.50/hr.	7,166.50
Insurance 12½% of labor	895.81
Engineering and Inspection	1,500.00
Sub-Total	17,185.61
20% Profit and Overhead	3,437.12
Sub-Total	20,622.73
Contingencies 15%	3,093.41
Total	$ 23,716.14
Say	$ 24,000.00

ClibPDF - www.fastio.com

6. Plan "D-2"

Description	Quantity	Unit Cost	Material Cost	Labor Hours
Rectifier - Good-All Type N28-12	5 each	$163.00	$ 815.00	40
Anodes - Duriron 2" x 60"	20 each	18.00	360.00	40
Coke Breeze, 20 holes @ 250#/hole	5000#	5.25cwt	262.50	60
3/4" conduit	200 ft.	25.00cft	50.00	12
#2/0 anode lead wire	1170 ft.	347.00mft	405.99	38
#8TW jumpers & bonding wires w/weld or clamp	75 each	5.00	375.00	225
Insulating couplings	100 each	5.00	500.00	300
Pro-Seal EP711B-2	25 kits	3.00	75.00	-
Scotch Cast Splicing Kit 82-A2 with #4 Resin (Wye)	15 each	6.50	97.50	8
Scotch Cast Splicing Kit 90-B1 with #4 Resin (In line)	5 each	5.50	27.50	3
Current Test Station	3 each	16.00	48.00	32
Trench excavation	1030 ft.	1.00/ft.	1030.00	41
Anode holes (excavation)	20 holes	10.00	200.00	40
Misc. wire & elect. parts	L. S.	250.00	250.00	-
			$ 4,496.49	839

Total Materials - Impressed Current C. P. System	$ 4,496.49
Total Materials - Galvanic Anode C. P. System	430.56
Total Materials	4,927.05
Sales Tax 4%	197.08
Labor 894 hrs. @ $5.50/hr.	4,917.00
Insurance (12½% of labor)	614.63
Engineering and Inspection	2,500.00
Sub-Total	13,155.76
20% Profit and Overhead	2,631.15
Sub-Total	15,786.91
Contingencies 15%	2,368.04
Total	$ 18,154.95
Say	$ 18,200.00

ClibPDF - www.fastio.com

CATHODIC PROTECTION AND PIPE REPLACEMENT COSTS

		Replacement Costs (Materials Only)			Replacement Costs (Contract Costs)(1)			Cathodic Protection Costs	
	Total (2) Lineal Feet	Plastic Pipe	Galv. Wrap	Black Iron Gas	Plastic Pipe	Galv. Wrap	Black Iron Gas	Mtls. & Inspect. Only (3)	Contract Costs
Plan "A"	163,485	$68,934	$102,396	$17,201	$218,554	$284,122		$19,500	$65,000
Plan "B"	79,180	31,495	47,811	17,201	102,883	133,981		14,200	45,000
Plan "C"	37,990	12,262	18,602	17,201	46,538	52,878		10,500	29,000
Plan "D"	20,580			17,201			$70,043	8,500	22,000
Plan "D-1"	20,580			17,201			70,043	8,500	24,000
Plan "D-2"	20,580			17,201			70,043	7,200	18,200

NOTES:

(1) Contract costs obtained from Division of Architecture

(2) Lineal footage for Plans A, B, and C are water piping only. Plans "D", "D-1", and "D-2" lineal footage is gas piping only.

(3) Cathodic protection costs for materials and inspection only include materials, 4% sales tax, 15% contingencies, and engineering and inspection.

ClibPDF - www.fastio.com

VIII. APPENDIX

A. Method for Measuring Pipe to Soil Potentials

Monthly cathodic protection potential readings must be obtained and recorded so that any erratic changes noted in the system can be investigated and, if necessary, corrected.

Readings are obtained by conducting a pipe to soil potential survey using a high resistance voltmeter and a standard copper sulfate half-cell.

All pipe under a cathodic protection system has a certain electrical charge. The pipe to soil potential survey measures the amount or quantity of the electrical charge.

A high resistance voltmeter is used to obtain adequate sensitivity. The copper sulfate half-cell is used as a stable reference point as it has a constant unchanging electrical charge. The voltmeter measures the difference between the electrical charge on the pipe and the copper sulfate half-cell.

Use the following procedure for conducting a pipe to soil survey:

1. Attach positive (+) lead from voltmeter to copper sulfate half-cell.
2. Attach negative (-) lead from voltmeter to pipe being checked.
3. Wet ground at check point.
4. Place copper sulfate half-cell on wet ground at check point.
5. Read and record voltage.

A record of all readings should be kept and any discrepancies in the system be brought to the attention of the corrosion engineer. Readings can be recorded as shown on pages 25A and B.

B. Equipment for Pipe to Soil Potential Survey

Simpson Model 269 AC-DC Volt-Ohm Microammeter 100,000 ohms/volt DC, 5,000 ohms/volt AC, w/carrying case	$ 99.50
8" Copper Sulfate Electrode (J. L. Collins Co., Angleton, Texas	11.00
Cupric Sulfate-Fine Crystal Reagent (1 pound)	1.25
Total Cost Estimate	$ 111.75

ClibPDF - www.fastio.com

RECTIFIER AND CHECK POINT RECORD

Cathodic Protection Record For _____ 19 ___

		Volts	Amps
I. (a) Rectifier No.	_____	_____	_____
	_____	_____	_____
	_____	_____	_____
	_____	_____	_____
	_____	_____	_____
	_____	_____	_____
	_____	_____	_____

		*P/S at Present Rectifier Setting	*P/S After Rectifier Setting
Check Point No.	_____	_____	_____
	_____	_____	_____
	_____	_____	_____
	_____	_____	_____
	_____	_____	_____
	_____	_____	_____
	_____	_____	_____

			Volts	Amps
Rectifier No.	_____	Readjusted to	_____	_____
	_____		_____	_____
	_____		_____	_____
	_____		_____	_____
	_____		_____	_____
	_____		_____	_____
	_____		_____	_____

NOTE: Settings to be changed only if a particular check point shows that the pipe in that area is less than 0.85 volts.

* P/S Pipe to Soil Potentials

ClibPDF - www.fastio.com

LEAK RECORD

	Date Leak Detected	Location and Remarks
1.		
2.		
3.		
4.		
5.		
6.		
7.		
8.		
9.		
10.		
11.		
12.		
13.		
14.		

NOTE: Forward monthly copy to Corrosion Engineer, Materials and Research Department, Sacramento, California

ClibPDF - www.fastio.com

C. Copper-Sulfate Half-Cell

1. Preparation of Solution:

The copper sulfate half-cell contains a solution that is made from crystals of cupric sulfate and water. The amount of each used to charge the half-cell is as follows:

a. Pour enough cupric sulfate crystals into the half-cell to fill the cell to a height of 1 inch or more above the bottom of the cell.

b. Add enough distilled water to fill the cell to within ½ inch of being full.

c. Screw the cleaned copper electrode into the cell and allow to stand overnight before using.

2. Maintenance of Half-Cell

When the half-cell is not in use, the wooden tip should be kept clean and covered with the rubber cap to maintain long life.

At the time of each monthly measurement, the half-cell should be emptied and then refilled with a new solution. The copper rod should be cleaned to a bright appearance with sandpaper to remove the copper oxide coating on the copper rod. Before inserting the copper electrode into the cell, wash the rod with distilled water to remove any dirt, etc.

CAUTION: The cupric sulfate crystals are poisonous. Wash hands after using the half-cell and the cupric sulfate crystals.

ClibPDF - www.fastio.com

EXHIBIT I

LEAK FREQUENCY CURVE
Long Beach State College

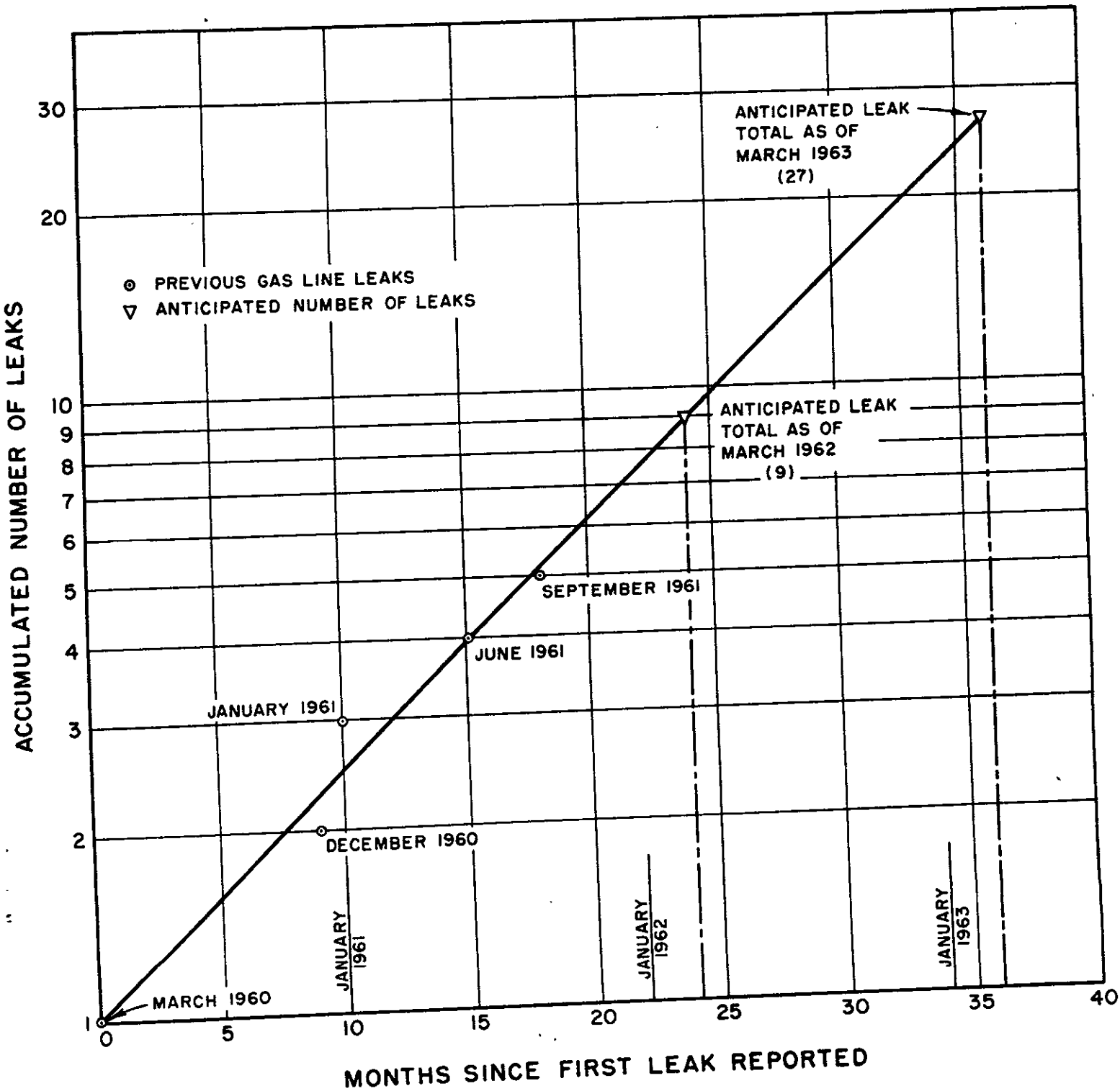

ClibPDF - www.fastio.com

EXHIBIT V
DETAIL OF
CURRENT TEST STATION

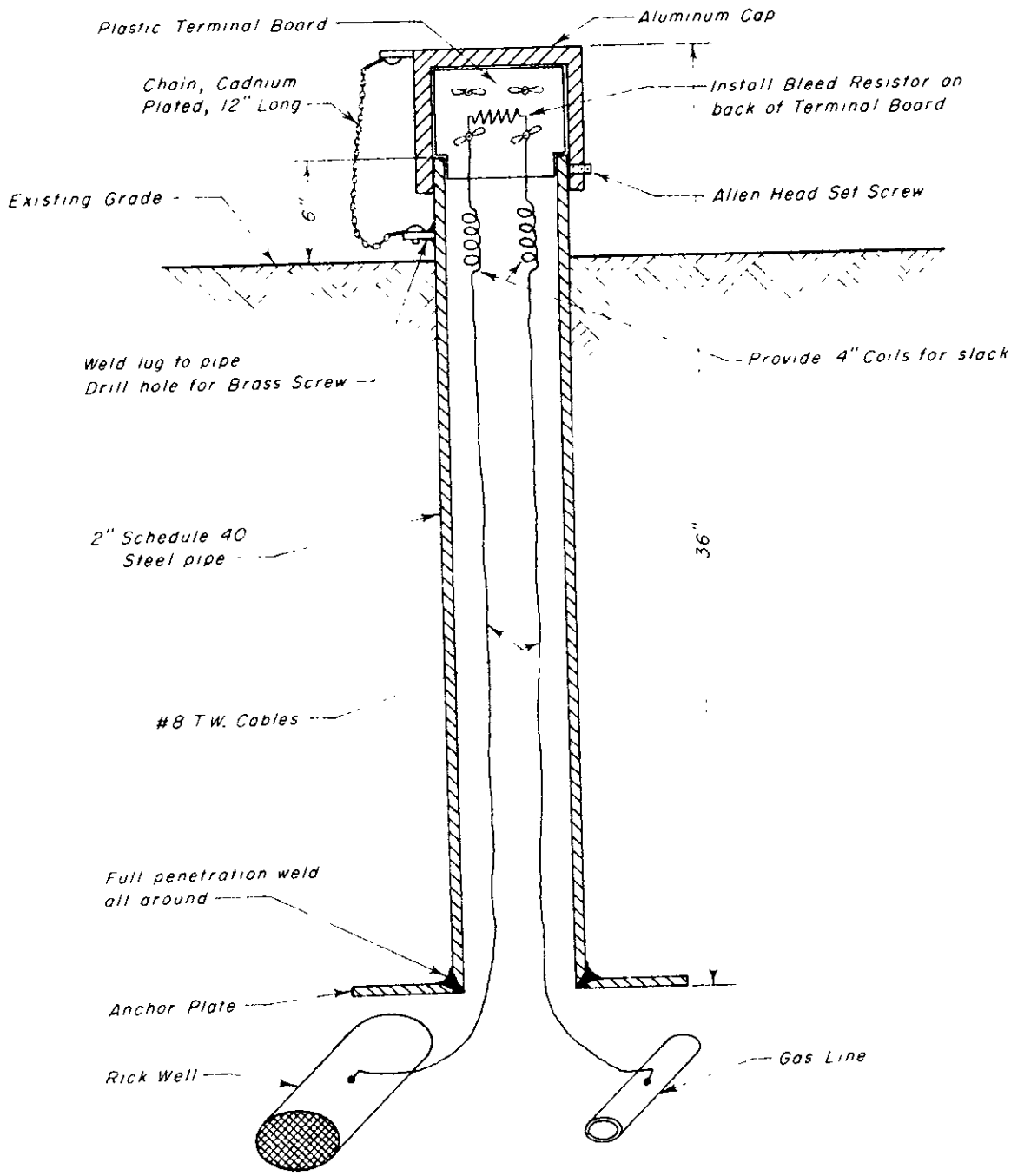

NOTES
1 See Tentative Specifications for Manufacturer of Interference Check Point
2 Attach lead wires to rick well and gas line by brazing or Caldwell Process

ClibPDF - www.fastio.com

EXHIBIT VI
INSTALLATION DETAILS
OF
IMPRESSED CURRENT ANODES

ANODE DETAIL

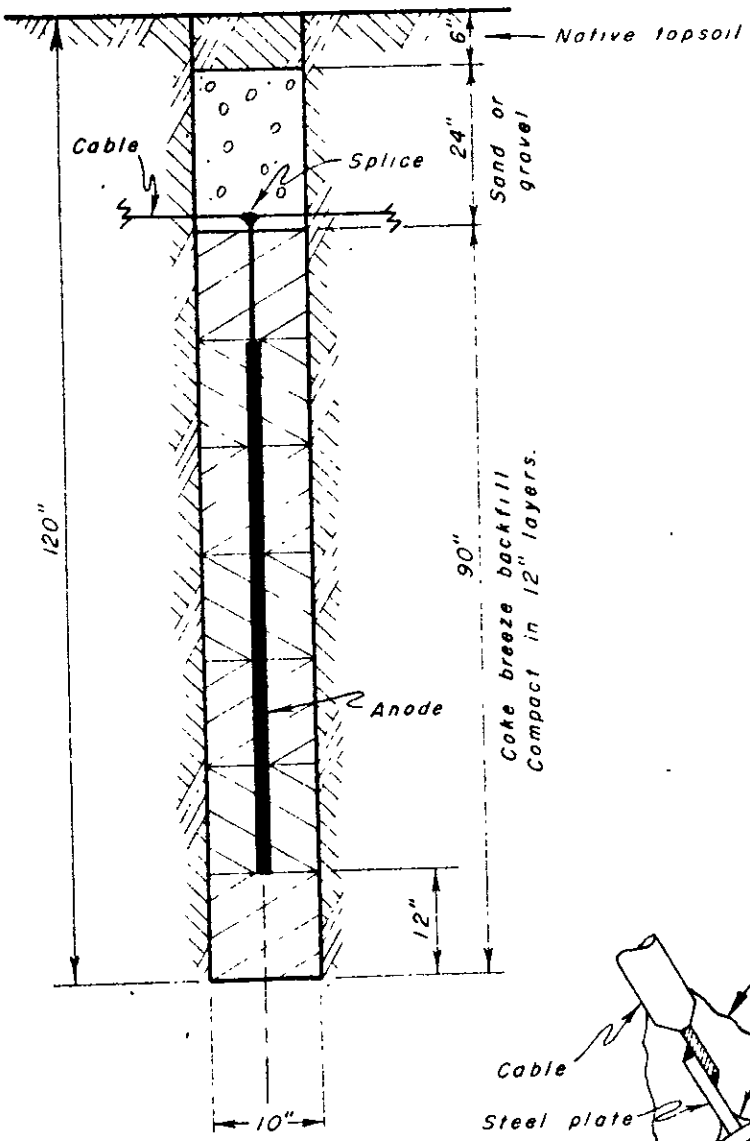

CABLE DETAIL

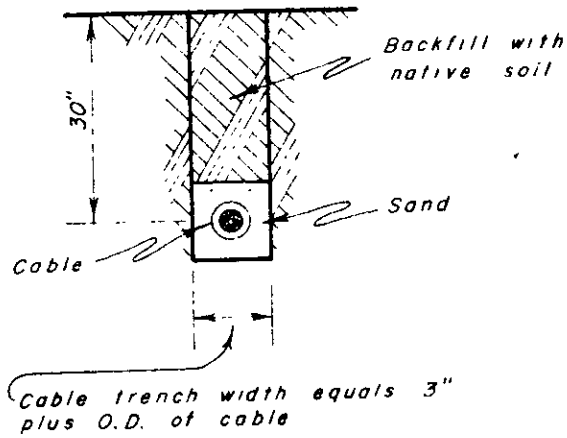

Cable shall have a min. of 1 1/2" sand blanket all around in expansive clay soils. In sandy soils, omit sand blanket and trench width to be minimum of 1" plus O.D of cable

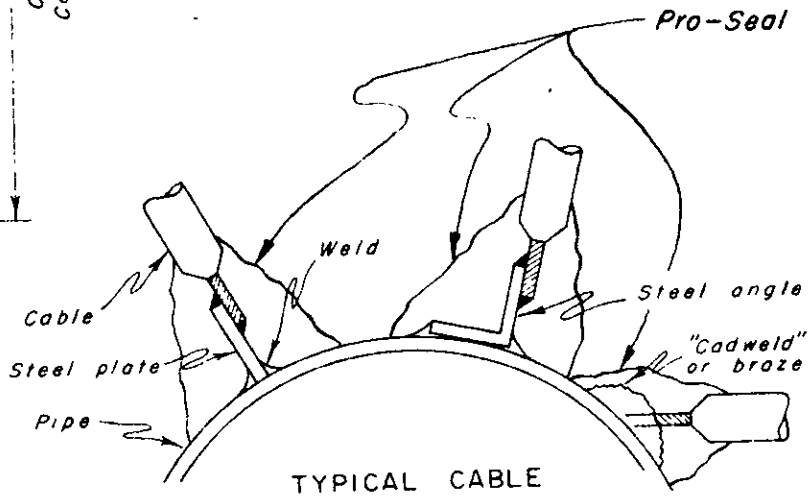

TYPICAL CABLE CONNECTIONS TO PIPE

Minimum dimensions of steel connector to be 3/8" thick and 2" in other directions. Cable to have a min of 1" length brazed or otherwise connected to steel connector or pipe The steel connector is to be welded all around. Pro-Seal EP-711, or equal, shall be spread a min of 1/4" thick 3" beyond all exposed metals used for connecting the cable to the pipe. When using pipe clamps, the metal surface is to be thoroughly cleaned for the area covered by clamp and then seal clamp and connection with Pro-Seal to minimum of 1/4" thick A sand blanket shall be placed 6" in all directions from the cable connection prior to backfilling with native soil

ClibPDF - www.fastio.com

EXHIBIT VII
INSTALLATION DETAILS
OF
GALVANIC ANODES

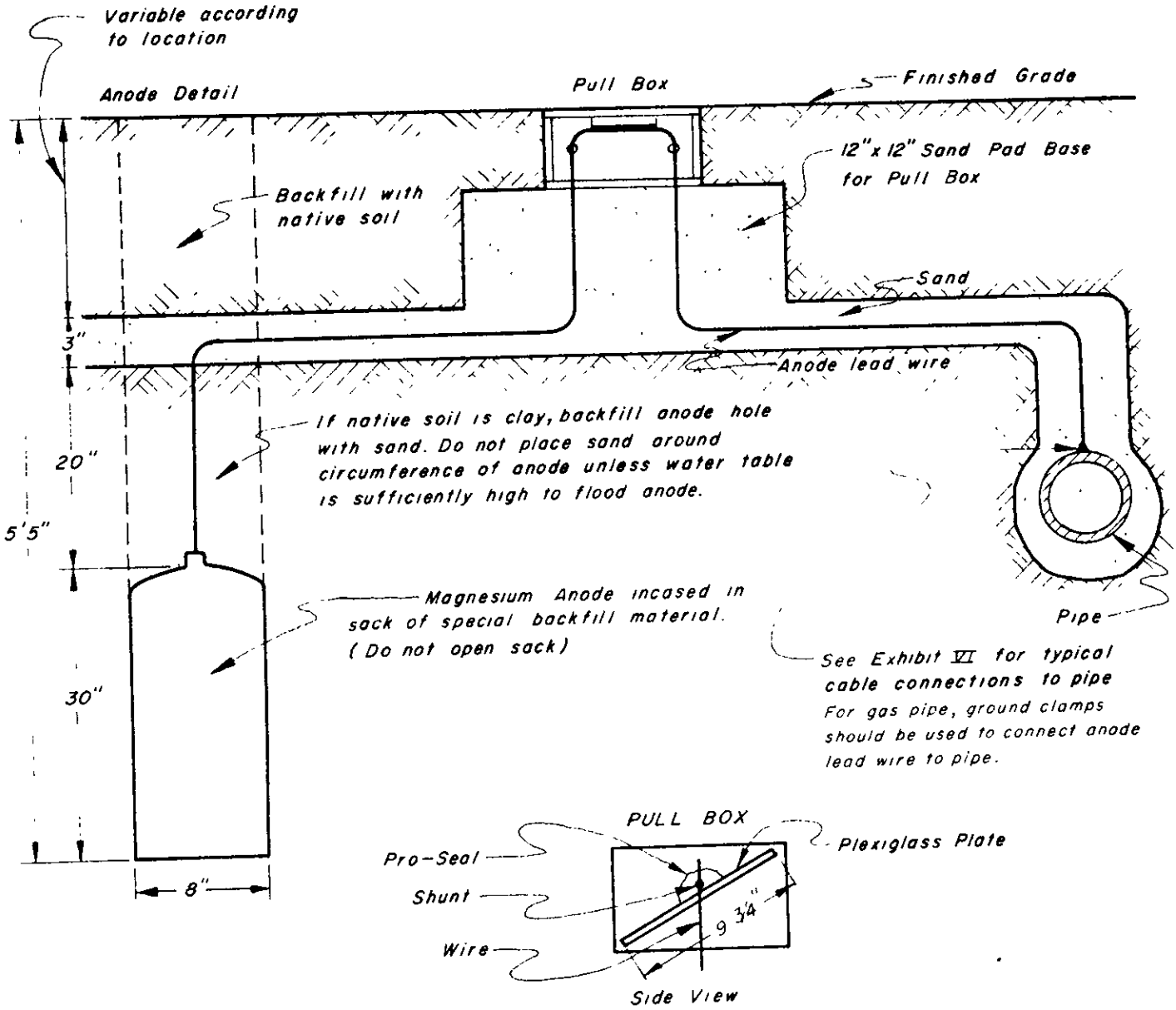

NOTE: Connect shunt to lead wire, solder and capsulate shunt and lead wire to have 1/4" min Pro-Seal all around. Then mount the capsulated shunt on the plexiglass plate (9 3/4" x 6" x 1/4"); attach with Pro-Seal, making sure the metering leads are in a vertical position Install plexiglass plate in Pull Box as shown

No Scale

ClibPDF - www.fastio.com

EXHIBIT VIII

CATHODIC PROTECTION
CABLE SPLICING DETAIL

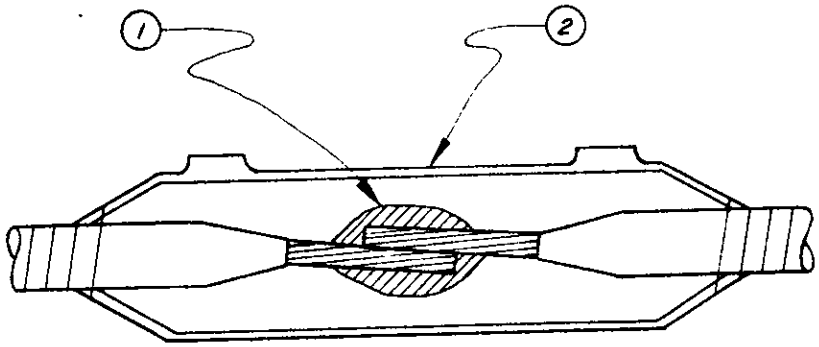

IN-LINE

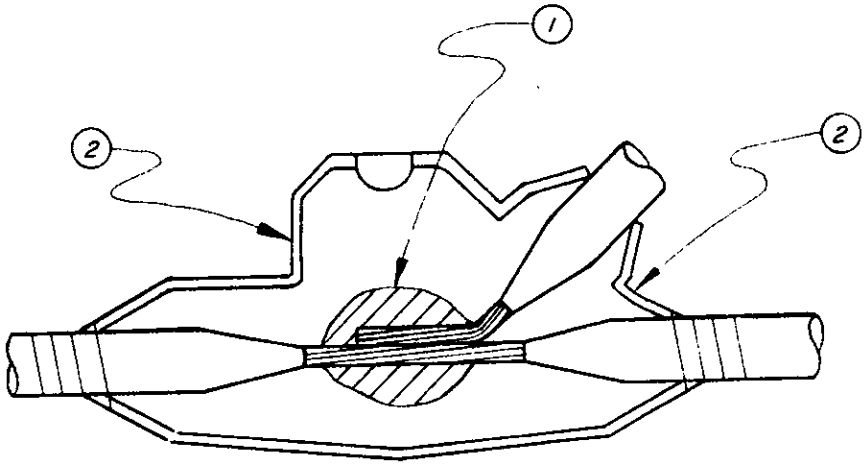

WYE

1. Weld connection by the Cadweld Process or equal.

2. Scotchcast splicing Kit utilizing an epoxy type resin.

NOTE: Cable at the splice shall be free of dirt, grease, or other foreign matter prior to the application of sealing materials.

ClibPDF - www.fastio.com

EXHIBIT IX

SECTION VIEW OF COPPER SULFATE HALF-CELL

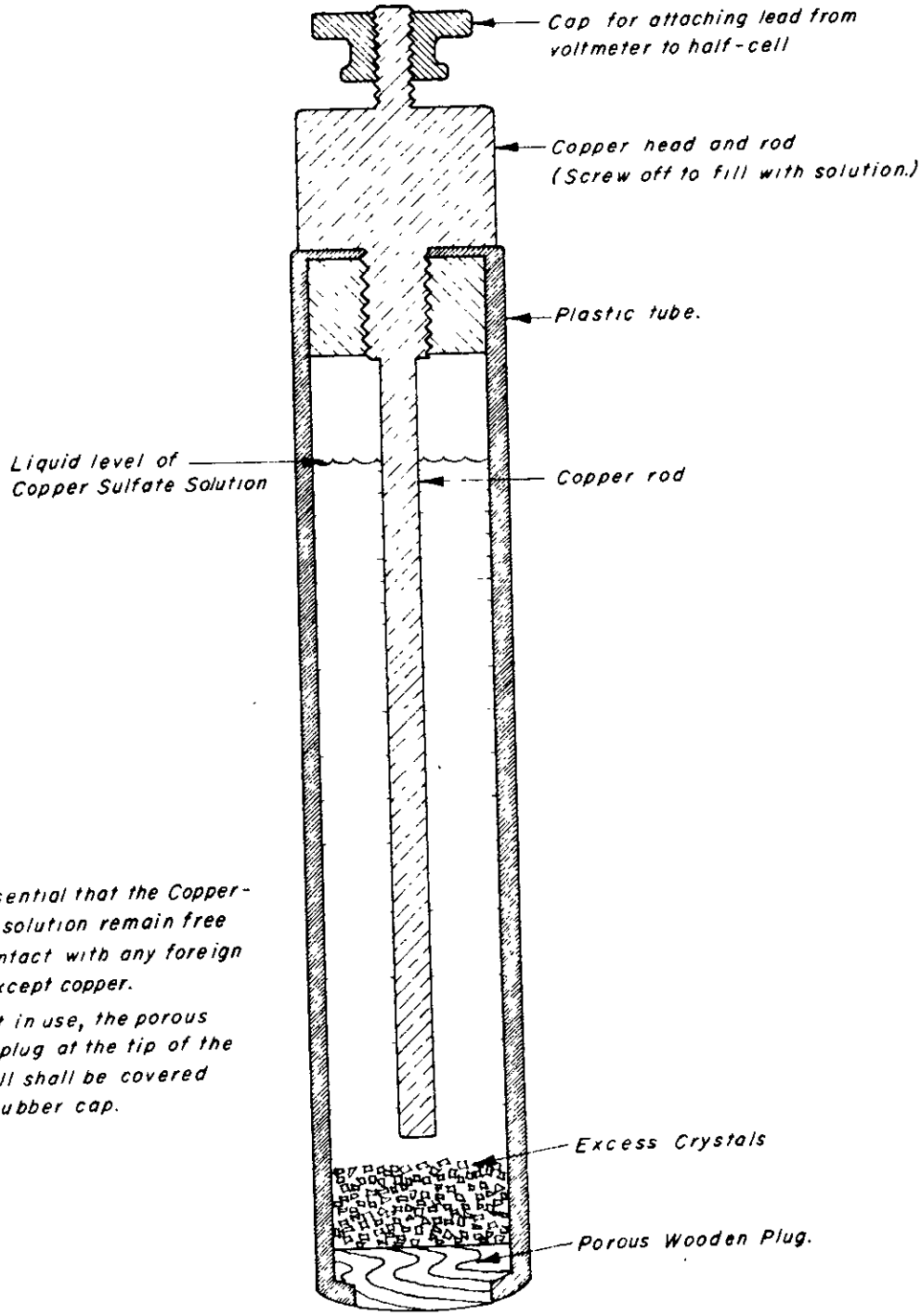

Note.

1. It is essential that the Copper-Sulfate solution remain free from contact with any foreign metal except copper.
2. When not in use, the porous wooden plug at the tip of the half-cell shall be covered with a rubber cap.

ClibPDF - www.fastio.com