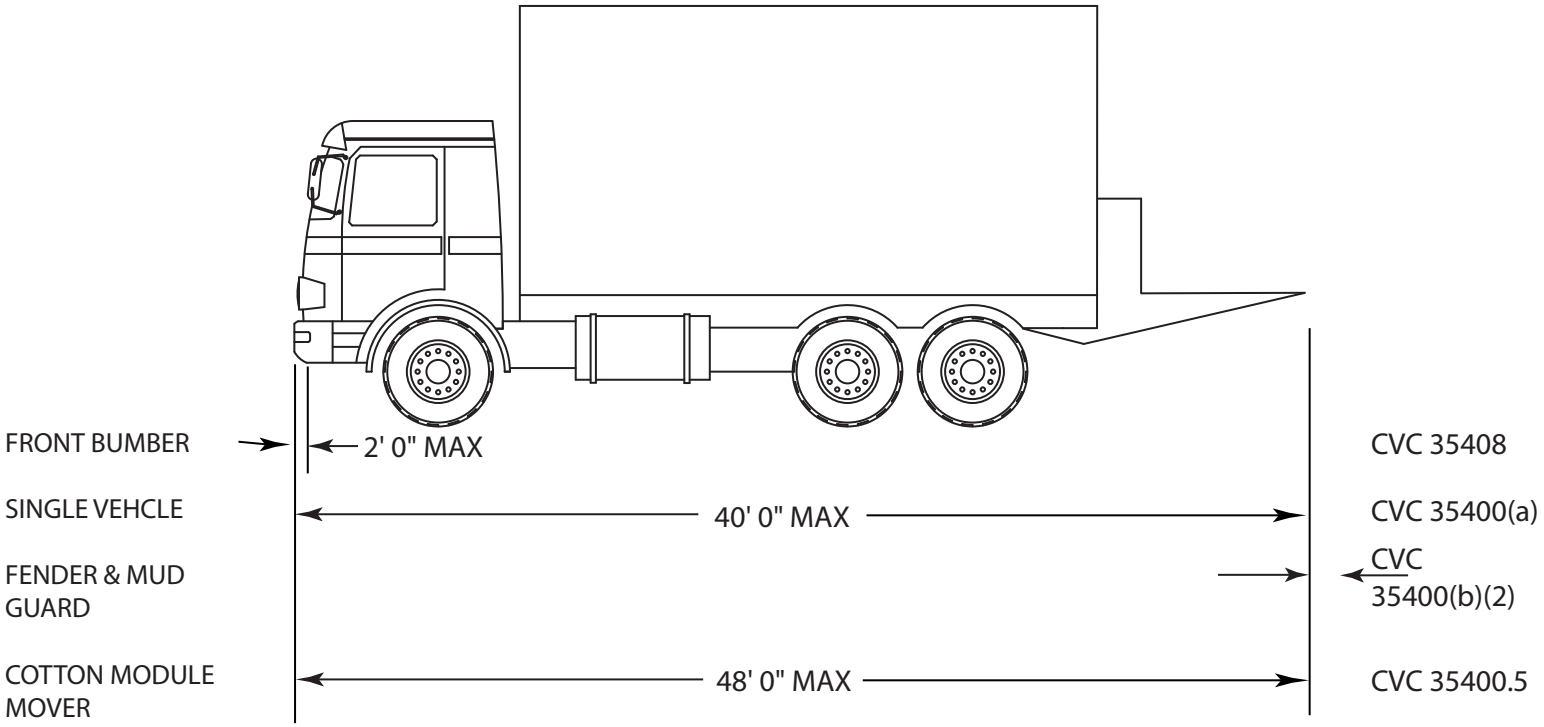SINGLE VEHICLES