9-30-03 gwe

Caltrans Metric

DIST	COUNTY	ROUTE	KILOMETER POST TOTAL PROJECT	SHEET NO.	TOTAL SHEETS

REGISTERED CIVIL ENGINEER

July 1, 1999
PLANS APPROVAL DATE

REGISTERED PROFESSIONAL ENGINEER G.W. Edwards No. C36386 Exp. 6-30-00 CIVIL STATE OF CALIFORNIA

The State of California or its officers or agents shall not be responsible for the accuracy or completeness of electronic copies of this plan sheet.

04

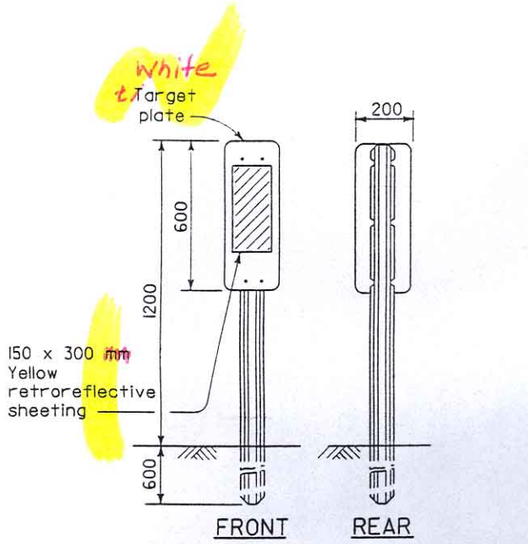

TYPE L-1
See Note 1

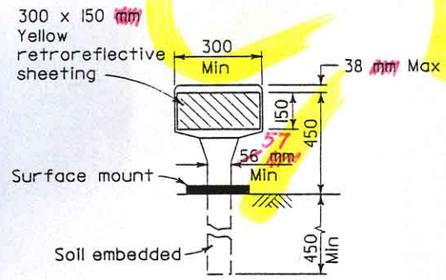

TYPE K-1
(Flexible post with horizonal orientation of sheeting)

Please make all these figures bigger

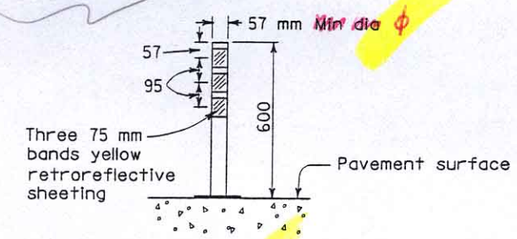

TYPE Q
(Round flexible post surface mount)

Tubular

2004

1999 STD. PLAN A73A

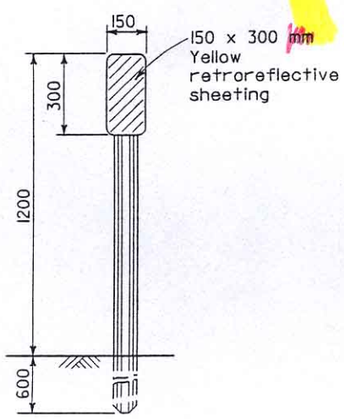

TYPE L-2
See Note 1

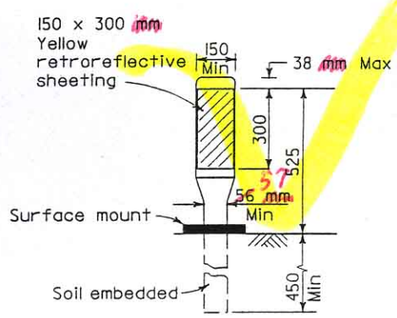

TYPE K-2
(Flexible post with vertical orientation of sheeting)

NOTE

1. See Standard Plan A73B for metal post details and additional markers.

STATE OF CALIFORNIA
DEPARTMENT OF TRANSPORTATION

OBJECT MARKERS

NO SCALE

ALL DIMENSIONS ARE IN MILLIMETERS UNLESS OTHERWISE SHOWN

A73A