92-07

STATE OF CALIFORNIA

DEPARTMENT OF TRANSPORTATION
DIVISION OF NEW TECHNOLOGY,
MATERIALS AND RESEARCH

EVALUATION OF THE SURFACE ABRASION TEST (TM 360) FOR ASPHALT CONCRETE

Final Report #CA/TL-92/07
Caltrans Study #F85TL61

Supervised by.....R.N. Doty, P.E.

Principal Investigator.....Roger Smith, P.E.

Co-Investigators.....Jack L. Van Kirk, P.E.
Thomas Scrimsher, P.E.

Report Prepared by.....Jack L. Van Kirk, P.E.

Jack L. Van Kirk P.E.
Senior Materials & Research Engineer

EARL SHIRLEY, Chief
Division of New Technology, Materials & Research

REGISTERED PROFESSIONAL ENGINEER
JACK L. VAN KIRK
No. 33829
Exp. 6/30/94
CIVIL
STATE OF CALIFORNIA

ClibPDF - www.fastio.com

STATE OF CALIFORNIA . DEPARTMENT OF TRANSPORTATION
TECHNICAL REPORT STANDARD TITLE PAGE
TL 1242 (Rev. 6/76)

1. REPORT NO. CA/TL-92/07	2. GOVERNMENT ACCESSION NO.	3. RECIPIENT'S CATALOG NO.
TITLE AND SUBTITLE Evaluation of the Surface Abrasion Test (TM 360) For Asphalt Concrete		5. REPORT DATE June 1992
AUTHOR(S)		6. PERFORMING ORGANIZATION CODE
Jack L. Van Kirk		8. PERFORMING ORGANIZATION REPORT NO. 65-324-643381
PERFORMING ORGANIZATION NAME AND ADDRESS Division of New Technology, Materials and Research California Department of Transportation Sacramento, California 95819		10. WORK UNIT NO.
		11. CONTRACT OR GRANT NO.
SPONSORING AGENCY NAME AND ADDRESS California Department of Transportation Sacramento, California 95814		13. TYPE OF REPORT & PERIOD COVERED Final
		14. SPONSORING AGENCY CODE F85TL61

SUPPLEMENTARY NOTES

ABSTRACT

The surface abrasion test procedure (California Test 360) and machine were reviewed in an effort to identify problem areas and improve the reproducibility of the test.

Improvements in equipment and the procedure were developed. An instrument to calibrate the surface abrasion machine (check the cycles per minute) was also developed. This report discusses the effect that variables such as asphalt source and grade, and aggregate gradation have on the surface abrasion of laboratory prepared specimens. Three aggregate sources and three asphalt sources were used in the study as well as different gradings and grades of asphalt.

A new improved test procedure was written and new specifications recommended.

KEY WORDS Surface abrasion; California Test 360, asphalt mix, bituminous mix, abrasion, aggregate quality, surface raveling, surface wearing, chain wear, AC moisture sensitivity.	18. DISTRIBUTION STATEMENT No restrictions. This document is available through the National Technical Information Service, Springfield, VA 22161

19. SECURITY CLASIF. (OF THIS REPORT) Unclassified	20. SECURITY CLASSIF. (OF THIS PAGE) Unclassified	21. NO. OF PAGES	22. PRICE

ClibPDF - www.fastio.com

CONVERSION FACTORS

English to Metric System (SI) of Measurement

Quality	English unit	Multiply by	To get metric equivalent
Length	inches (in)or(")	25.40	millimetres (mm)
		.02540	metres (m)
	feet (ft)or(')	.3048	metres (m)
	miles (mi)	1.609	kilometres (km)
Area	square inches (in^2)	6.432×10^{-4}	square metres (m^2)
	square feet (ft^2)	.09290	square metres (m^2)
	acres	.4047	hectares (ha)
Volume	gallons (gal)	3.785	litre (l)
	cubic feet (ft^3)	.02832	cubic metres (m^3)
	cubic years (yd^3)	.7646	cubic metres (m^3)
Volume/Time (Flow)	cubic feet per second (ft^3/s	28.317	litres per second 1/s)
	gallons per minute (gal/min)	.06309	litres per second (1/s)
Mass	pounds (lb)	.4536	kilograms (kg)
Velocity	miles per hour (mph)	.4470	metres per second (m/s)
	feet per second (fps)	.3048	metres per second (m/s)
Acceleration	feet per second squared (ft/s^2)	.3048	metres per second squared (m/s^2)
	acceleration due to force of gravity (G) (ft/s^2)	9.807	metres per second squared (m/s^2)
Density	(lb/ft^3)	16.02	kilograms per cubic metre (kg/m^3)
Force	pounds (lbs)	4.448	newtons (N)
	(1000 lbs) kips	4448	newtons (N)
Thermal Energy	British termal unit (BTU)	1055	joules (J)
Mechanical Energy	foot-pounds (ft-lb)	1.356	joules (J)
	foot-kips (ft-k)	1356	joules (J)
Bending Moment or Torque	inch-pounds (in-lbs)	.1130	newton-metres (Nm)
	foot-pounds (ft-lbs)	1.356	newton-metres (Nm)
Pressure	pounds per square inch (psi)	6895	pascals (Pa)
	pounds per square foot (psf)	47.88	pascals (Pa)
Stress Intensity	kips per square inch square root inch (ksi$\sqrt{in}$)	1.0988	mega pascals$\sqrt{metre}$ (MPa$\sqrt{m}$)
	pounds per square inch square root inch (psi$\sqrt{in}$)	1.0988	kilo pascals$\sqrt{metre}$ (KPa$\sqrt{m}$)
Plane Angle	degrees (°)	0.0175	radians (rad)
Temperature	degrees fahrenheit (F)	$\frac{+F - 32}{1.8} = +C$	degrees celsius (°C)

ClibPDF - www.fastio.com

ACKNOWLEDGMENTS

The majority of the Laboratory work was performed by Duane Andersen of the Flexible Pavement (Materials and Construction) Branch of the Office of Pavement of the Division of New Technology, Materials and Research (NTM&R). His contribution is fully recognized and appreciated. Other personnel also contributing to this study were:

1. Ken Iwasaki
2. Ron Morrison
3. Laura Bitterman
4. Jayne Robinson

In addition, the cooperation and expertise of Mr. Bill Chow (retired) and Mr. Del Gans of the Electrical Instrumentation Branch of the Office of Electrical, Electronics and Engineering of NTM&R is appreciated.

Also, the response and in-put received from Thomas Scrimsher (retired) and from Caltrans District Materials personnel is greatly appreciated, particularly that received from Stan Roe (retired), District 02, Guy Buckman (retired), District 03 and Dean Pitts (Retired), District 08.

ClibPDF - www.fastio.com

TABLE OF CONTENTS

		Page
I.	INTRODUCTION	1
II.	CONCLUSIONS	2
III.	RECOMMENDATIONS	3
IV.	IMPLEMENTATION	4
V.	BACKGROUND	5
VI.	DISCUSSION	9
	A. Work Plan	9
	B. Test Details	9
	1. Phase I	9
	2. Phase II	17
	3. Phase III	17
	4. Phase IV	21
	C. Summary	25
VII.	REFERENCES	26
VIII.	TABLES	27
APPENDIX A - Current and Revised California Test 360		A-1
APPENDIX B - Surface Abrasion Machine Calibrator (SAMC)		B-1
APPENDIX C - Surface Abrasion Mold Specifications and Drawings		C-1

ClibPDF - www.fastio.com

LIST OF TABLES

Page

TABLE 1 - Aggregate Gradations (% Passing) 28

TABLE 2 - Asphalt Properties 29

TABLE 3 - Optimum Bitumen Contents (%) (Aggregate Source A) 29

TABLE 4 - Optimum Bitumen Contents (%) (Aggregate Source B) 30

TABLE 5 - Optimum Bitumen Contents (%) (Aggregate Source C) 30

TABLE 6 - Comparison of Data Between Machines 31

TABLE 7 - Effect of Compaction, Temperature and Testing Surface on Abrasion Loss 32

TABLE 8 - Effect of Aggregate Gradation on Abrasion Loss (Asphalt Source #1, AR 2000) 33

TABLE 9 - Effect of Aggregate Gradation on Abrasion Loss (Asphalt Source #2, AR-2000) 34

TABLE 10 - Effect of Aggregate Gradation on Abrasion Loss (Asphalt Source #3, AR-2000) 35

TABLE 11 - Effect of Aggregate Gradation on Abrasion Loss (Asphalt Source #1, AR-4000) 36

TABLE 12 - Effect of Aggregate Gradation on Abrasion Loss (Asphalt Source #2, AR-4000) 37

TABLE 13 - Effect of Aggregate Gradation on Abrasion Loss (Asphalt Source #3, AR-4000) 38

TABLE 14 - Effect of Aggregate Gradation on Abrasion Loss Using Rubber Balls and Aggregate Source C (Asphalt Source #2, AR-4000) 39

ClibPDF - www.fastio.com

LIST OF FIGURES

		Page
FIGURE 1 -	Surface Abrasion Machine	6
FIGURE 2 -	Rubber Balls on Briquette, Steel Balls on Briquette, and Testing Mold	6
FIGURE 3-	Surface Abrasion Machine Calibrator (SAMC) . .	12
FIGURE 4-	Fabrication Mold, Rings and Base	14
FIGURE 5 -	Fabrication Mold and Base (Rings in Place)	14
FIGURE 6 -	Effect of Asphalt Source and Viscosity on Abrasion Loss (3/4" Max. Agg.)	18
FIGURE 7 -	Effect of Asphalt Source and Viscosity on Abrasion Loss (1/2" Max. Agg.)	19
FIGURE 8 -	Effect of Asphalt Source and Viscosity on Abrasion Loss (3/8" Max. Agg.)	20
FIGURE 9 -	Effect of Gradation on Abrasion Loss (Asphalt Source 1)	22
FIGURE 10 -	Effect of Gradation on Abrasion Loss (Asphalt Source 2)	23
FIGURE 11 -	Effect of Gradation on Abrasion Loss (Asphalt Source 3)	24

ClibPDF - www.fastio.com

1. INTRODUCTION

In recent years there has been questions raised concerning the reliability and repeatability of test results obtained from the surface abrasion test (California Test 360). There have been occasions when aggregates have been accepted using Method A, yet they have shown evidence of moderate to severe stripping in actual field conditions. Problems have also arisen with the specification limit used for Method B of the test. A variation in test values and differences in the specified limits for Method B are causing confusion and frustration with contractors and suppliers of aggregates. Occasionally, one district has approved an aggregate source (relative to their surface abrasion requirement) while a neighboring district has rejected the same source due to a more restrictive specification. Similarly, with a given specification, a variation in test data has occurred (between districts) that has led to acceptance and rejection of the same material. These problems led to this study to evaluate and make improvements to the surface abrasion test.

ClibPDF - www.fastio.com

II. CONCLUSIONS

1. The revisions of the test equipment, the development of the electrical calibration device, a change in test temperature, and a change from static to kneading compaction will produce a test procedure that will: 1) better identify aggregates that may contribute toward poor roadway performance and, 2) produce more uniform test results.

2. Asphalt source can effect the surface abrasion results.

3. The grade of asphalt can effect the surface abrasion results.

4. Aggregates used in this study which have exhibited poor performance in the roadway will show abrasion losses exceeding 2.5 grams/square inch when tested with asphalt grades AR-2000 and AR-4000.

5. Surface abrasion testing can be performed at room temperature (77$\pm$ 2°F) and still provide data that will distinguish between good and poor aggregates.

6. A change in maximum allowable aggregate size does not significantly affect surface abrasion results (considering 3/8, 1/2, or 3/4 inch maximum size aggregate).

7. The use of rubber balls in surface abrasion testing does not always identify poor aggregates.

ClibPDF - www.fastio.com

III. RECOMMENDATIONS

1. All surface abrasion machines should have a 15 minute timer accurate to ± 5 seconds.

2. The surface abrasion test temperature should be 77 ± 2° F.

3. Kneading compaction should be used in lieu of static compaction to fabricate surface abrasion test specimens.

4. For acceptance testing, the asphalt used for surface abrasion testing shall be the asphalt designated (source and grade) by the contractor for the project.

5. The grade and source of asphalt used when designing AC mixes should be reported in both preliminary and acceptance testing.

6. Annual audits of test equipment within the districts shall consist of both a check of mechanical operation and correlation testing.

7. The use of rubber balls (Method A) should be deleted from the surface abrasion test procedure (California Test 360).

8. The revised California Test 360 developed in this study should be adopted statewide.

9. A maximum loss of 2.5 grams/square inch should be specified on a preliminary basis (using revised California Test 360) for all AC mixes (when tested at optimum bitumen content).

10. Further testing should be conducted with different aggregate sources throughout the state to determine a standard specification for abrasion loss for all AC mixes.

ClibPDF - www.fastio.com

IV. IMPLEMENTATION

All Districts which conduct surface abrasion tests will need to equip themselves with the modified equipment developed in this study. NTM&R will be available to assist in this effort. NTM&R will officially update California Test 360 immediately after publication of this report. NTM&R will also conduct a study with all District Labs, using the new equipment and procedure, to determine the surface abrasion loss typical for aggregates used throughout the state. The results of that study will then provide data for appropriate specifications and, at that time, NTM&R will make recommendations for standard surface abrasion specifications to be used in the state. It is anticipated that the new specifications should be available in 1993.

This study also led to the development, by an equipment supplier, of a surface abrasion machine that uses a direct drive motor (no adjustable pulley) and a rheostat that easily adjusts the cycles per minute to the required specifications. All existing machines will be modified to incorporate this feature and all new machines purchased in the future will be so equipped. For those labs using the older machines, until these changes can be made, the surface abrasion machine calibrator (SAMC) (see discussion section) must be used periodically to assure proper calibration.

ClibPDF - www.fastio.com

V. BACKGROUND

The surface abrasion machine (Figure 1) and test method were developed in 1960 and reported in 1963 by Zube and Skog (1). The test at that time used rubber balls (1-1/8 inch diameter) (Figure 2) and was intended to measure the film stripping characteristics of asphalt concrete (AC) mixes. In 1968, in another study by Zube, Skog and Scrimsher (2), the use of steel balls (13/32 inch diameter) (Figure 2) was introduced along with a reduction in test temperature to simulate the surface abrasion that may result from the use of tire chains on the roadway. That study was successful in correlating abrasion loss in the laboratory with that of actual field performance. The original tests (with the rubber balls) were performed on the bottom of laboratory fabricated AC specimens prepared for the swell test (California Test 305) after the swell test was conducted. However, it was deemed prudent to prepare a laboratory test specimen more closely resembling actual field density. Subsequently, the test procedure evolved to the point where a test specimen having a density equivalent to 95 percent of a laboratory density was used. Early attempts to achieve this density with kneading compaction were not successful; however, a procedure utilizing a static load for compaction did appear to be successful. In 1970, California Test 360 was rewritten to utilize both rubber and steel balls (Method A for rubber balls and Method B for steel balls) and this static compaction. The two methods were intended to measure the potential for film stripping and tire chain abrasion independently.

Method A (rubber balls) is a fairly good method of measuring film stripping characteristics of some AC mixes. However, there have been occasions when film stripping noted in the field has not been identified with this method in the laboratory. Also, it has been found that the rubber balls wear with use. Since test results are affected by a change in the ball weight, frequent checking and replacement is necessary.

In addition, when ordering rubber balls, it became increasingly more difficult to receive a complete shipment that was within specification (one shipment had only 25 percent meeting all the physical requirements).

ClibPDF - www.fastio.com

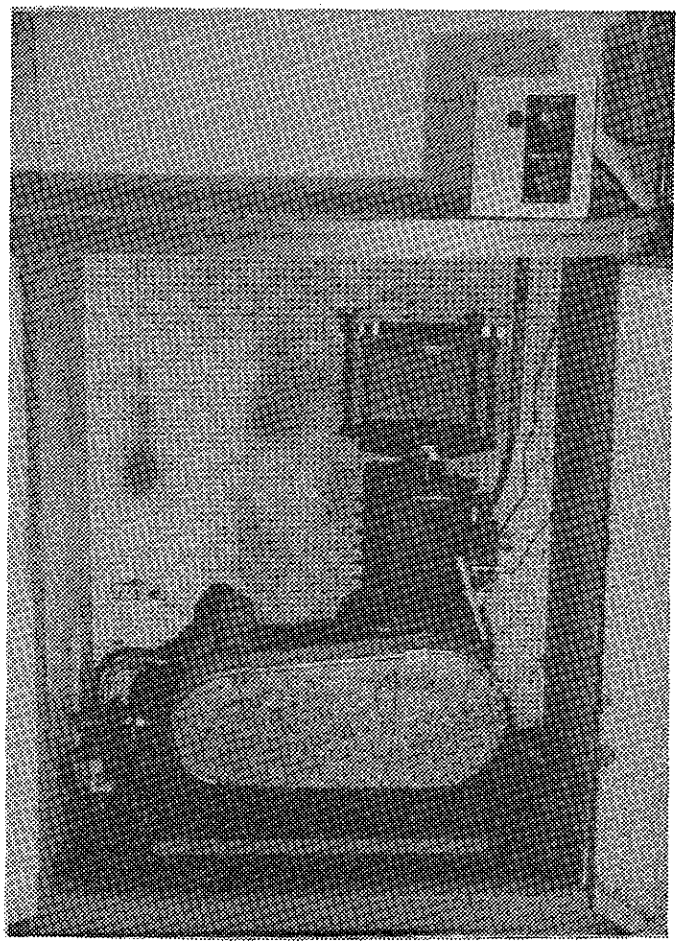

FIGURE 1

SURFACE ABRASION MACHINE

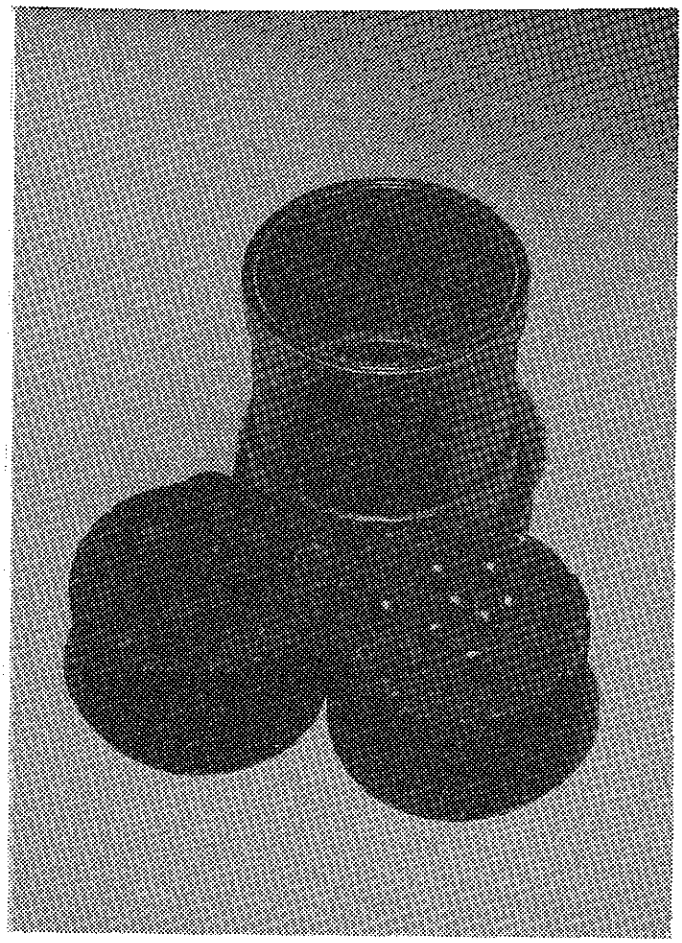

FIGURE 2

RUBBER BALLS ON BRIQUETTE, STEEL BALLS ON BRIQUETTE AND TESTING MOLD

ClibPDF - www.fastio.com

Thus, a move began toward the use of Method B for two reasons. First, steel balls are far less susceptible to wear than the rubber balls. Second, Method B is more severe, so the abrasion loss is much higher and this allows for easier separation of acceptable and unacceptable mixes. Thus, Method B, which was developed to evaluate the resistance to chain wear of AC mixes proposed for the snow regions, has in recent years also been used to evaluate "strippable" aggregates used in AC mixes placed in the coastal, central valley, and desert regions of California. Although the method appeared effective, as its use increased some problems also developed. The test method was designed to evaluate materials primarily under cold conditions and, therefore, the test was performed at 40°F. Laboratory test specimens, prepared in triplicate, occasionally yielded a range of 20 grams loss, thereby raising questions regarding the repeatability of the test results. Also, a tentative specification for maximum loss (35 grams) was recommended by NTM&R (based solely upon tests of local aggregates), but this value was not adopted by all the districts. The result, as discussed earlier, was a variation in specification requirements that eventually became an issue when an aggregate source was accepted by one district and rejected by another. A standard specification applicable on a statewide basis (with specific values for different climatic regions) was needed to remove the confusion that was created due to a variation in values being considered acceptable throughout the state.

The repeatability and high range of values mentioned above can be influenced by two factors; test temperature and static compaction. It is very difficult to maintain the 40°F test temperature. Once the specimens are removed from the refrigerator, their temperature begins to increase. Depending on the time it takes a technician to prepare the sample for testing, the temperature change could have a significant affect on the results. It was believed that testing at room temperature would provide more consistent test results.

The other factor, static compaction, produces a testing surface which is not typical of mixes compacted in the field. There is no kneading action, which is typical of field compaction, on the surface of the briquette when compacted in the laboratory. Depending on the angularity and percent of

ClibPDF - www.fastio.com

crushed aggregate, the static compaction in the laboratory produces a specimen which may not adequately represent the true properties of the mix when tested. It was believed that the kneading compactor would provide more representative compaction and possibly more consistent results in the surface abrasion testing when considering the many different aggregate sources used in California.

Because of the problems which have been mentioned, it was apparent that a re-examination of California Test 360 was necessary. This study was therefore undertaken to evaluate and, if necessary, revise the surface abrasion test to provide more reproducible results and to provide a test that is more compatible with current needs.

ClibPDF - www.fastio.com

VI. DISCUSSION

A. Work Plan

The work plan for this research was divided into four separate phases:

Phase I - Obtain samples of aggregate and asphalt from different sources and determine optimum bitumen contents for each combination. Review and refine the test equipment and procedure.

Phase II - Determine the effect of asphalt source and viscosity on the test results.

Phase III - Determine the effect of aggregate gradation on the test results.

Phase IV - Determine a preliminary specification limit for surface abrasion loss.

B. Test Details

1) Phase I - Obtain samples of aggregate and asphalt from different sources and determine optimum bitumen contents for each combination. Review and refine the test equipment and procedure.

Aggregate and Asphalt

Three California aggregate sources were selected. One source (A) was selected for its historically good performance on state highways in Northern California and a second and third source (B and C) were selected for their historically poor performance in Southern California. All three sources were used in the testing unless otherwise noted.

Three aggregate gradations used in California were chosen for this research (3/8, 1/2 and 3/4 inch maximum size) and they are presented in

ClibPDF - www.fastio.com

Table 1*. Three different asphalt sources and two grades (AR-2000 and AR-4000) of each source were also chosen for the research. The asphalt properties are shown in Table 2. All asphalt sources and grades were used in the testing unless otherwise noted. Using each asphalt source and grade, the optimum bitumen content (OBC) for each aggregate source and grading was determined. These values are presented in Tables 3-5. The OBC was determined by California Test 367 which designates a range for the asphalt content. This range is established by recommending optimum as the high side and 0.3 percent less than optimum for the low side. It was decided to use the low side of the recommended range for asphalt content because previous studies (1) and experience show that asphalt content does influence abrasion loss. This asphalt content could be used in the field and would represent a condition in which the actual asphalt content is lower than the one specified due to the tolerance allowed (± 0.5 % asphalt) for asphalt content. It was felt that testing at OBC minus 0.3%, would be reasonably representative of a field condition wherein the asphalt content was on the low side of the allowable range.

Generally the OBC decreases as the maximum size of the aggregate increases when using the same aggregate source. It also generally decreases as the viscosity of the asphalt decreases (such as going from AR 4000 to AR 2000). However, in this study that did not always hold true. It is believed that these irregularities were caused by the poor quality of the aggregate used (Source C) and, in particular, the absorptive property of the aggregate.

Only asphalt source #1, aggregate source A, and the 3/4 inch maximum size aggregate grading was used for testing conducted in Phase I.

Testing Machine Specifications

Two surface abrasion machines were used at NTM&R for the testing. Before proceeding with the research concerning fabrication and testing, the

*All tables are located in Section VIII

ClibPDF - www.fastio.com

testing machines were checked for specification compliance for cycles per minute (CPM) (1200) and height of stroke (one inch). A strobe light was first used to check the CPM; however, it was found that the CPM for each machine varied considerably in a series of repeated tests.

A request to the Electrical Instrumentation Branch of NTM&R for a more sensitive electrical calibration device resulted in the development of an excellent unit (called the Surface Abrasion Machine Calibrator, SAMC, Figure 3) that uses a light sensor to measure the CPM instantly, accurately and numerically. (This unit was immediately placed in use in the districts to audit surface abrasion machines via an established routine calibration check. Information concerning the SAMC can be found in Appendix B.) The one inch vertical stroke checked to within 1/8 inch on both machines and was considered satisfactory.

Equipment Modification

A comparison of data between two different surface abrasion machines was conducted. The machines were first calibrated with a stopwatch and the SAMC. AC specimens were then fabricated in the laboratory using the present California Test 360 (compacted using a static load and tested at 40°F).

The results, presented in Table 6 (under Current Mold) revealed that the average of each machine varied by 5.4 grams. It also showed a test data range as high as 18.1 grams for machine #1 and 20.0 grams for machine #2. It was felt these values were unacceptable and an investigation to determine the cause was made.

The investigation revealed two problems which could lead to erroneous and inconsistent results. First, some briquettes apparently had a slight vertical movement within the mold, due to an improper fit of the base, and this caused a vibration which allowed the edges of the test briquettes to be occasionally broken off, creating a spalled condition. The material which broke off would erroneously increase the amount of material considered as abrasion loss. The second problem also was associated with spalling of the

ClibPDF - www.fastio.com

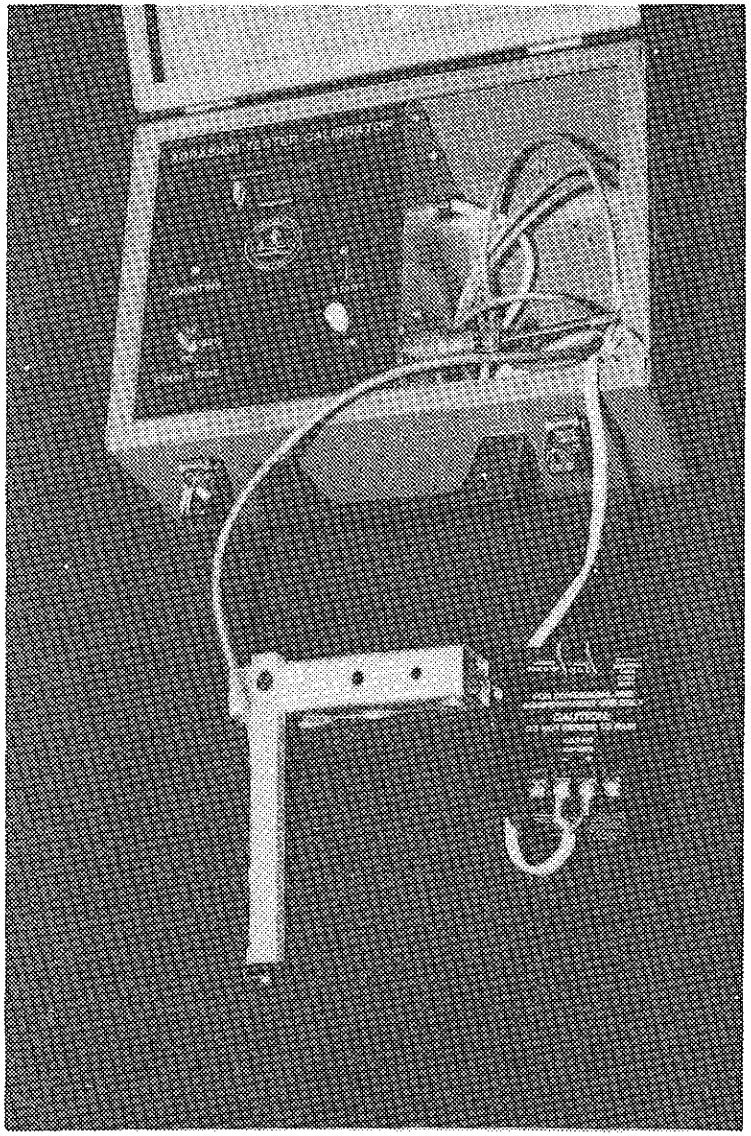

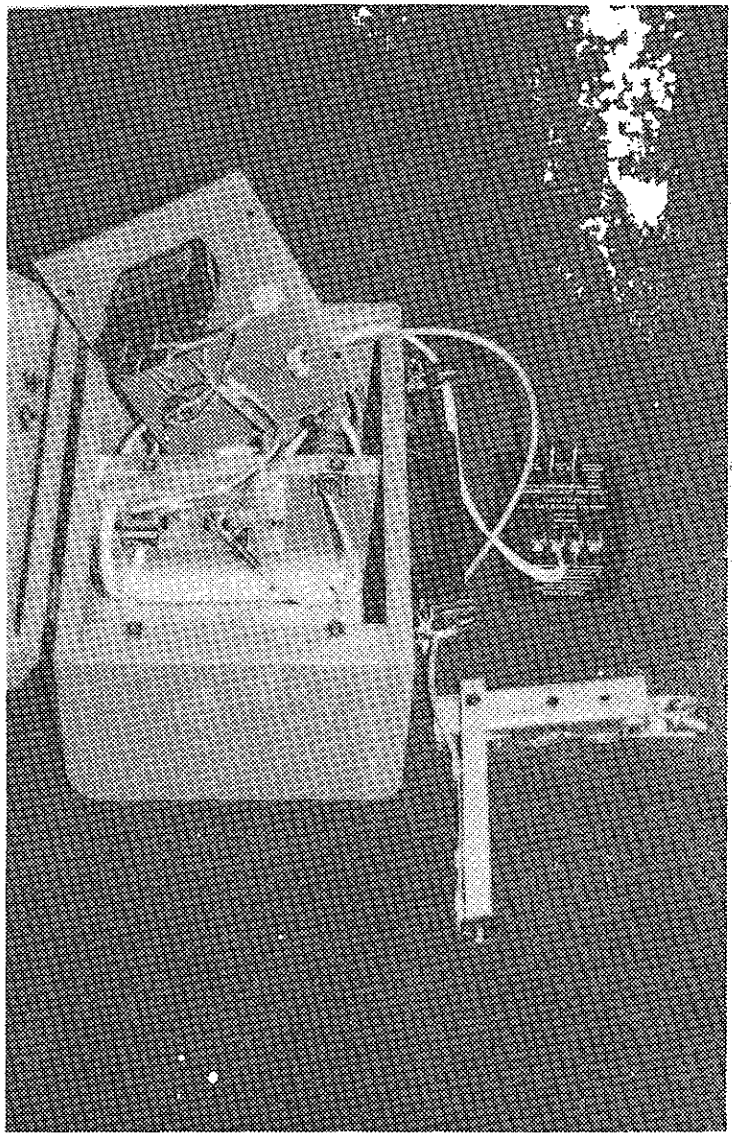

FIGURE 3
SURFACE ABRASION MACHINE CALIBRATOR
(SAMC)

ClibPDF - www.fastio.com

outer edge of the briquette. However, this spalling was caused by aggregate breaking away at the edge because the briquette was not adequately held in place by the 1/8 inch lip located at the top of the specimen (inside of mold). This would again erroneously increase the amount of material considered as abrasion loss. In the research, this condition was called the "edge effect". In the field, there is no edge effect because there is no similar edge in the travelled way. It was felt that the 1/8 inch lip in the testing mold was not adequate.

These problems were corrected by modifying the testing mold. First, the lower outside end of the mold and the inside of the base recess were threaded so that the base could be screwed onto the mold. This produced a positive fit. Second, to eliminate the edge effect, a steel ring, with a rubber ring below it, was placed on top of the test specimen. As the base was screwed onto the end of the mold, both rings were forced up against the 1/8 inch lip. Both rings (Figure 4 and 5) were about 3/32 inch thick and had a 4.0 inch outside and a 3.25 inch inside diameter. This kept the test specimens intact during testing; however, it reduced the exposed surface area of the specimen from 11.0 square inches to 8.4 square inches (31% reduction). Hence, this produced a reduction in the surface abrasion loss.

At this point in the testing, the machines were checked for calibration and a new series of tests was performed while incorporating the modified mold and the rings. The new series of test results is also presented in Table 6 (under Modified Mold). The average for each machine differed by only 1.5 grams using the modified mold and the maximum range of data for either machine dropped from 20.0 grams to 6.2 grams. Due to the nature of the test, and the material tested, these values were considered acceptable. Thus, all subsequent testing in this study was performed using the SAMC, the modified mold and the rings.

Temperature and Compaction

Two different parameters were looked at in this portion of the research; test temperature and type of compaction. Because it is difficult to

ClibPDF - www.fastio.com

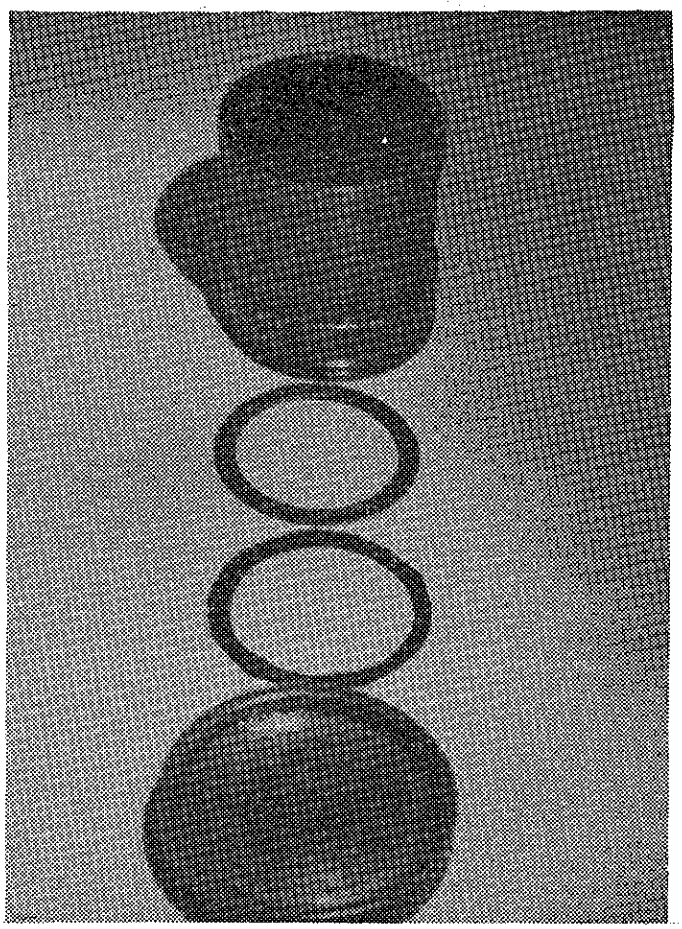

FIGURE 4

FABRICATION MOLD, RINGS AND BASE

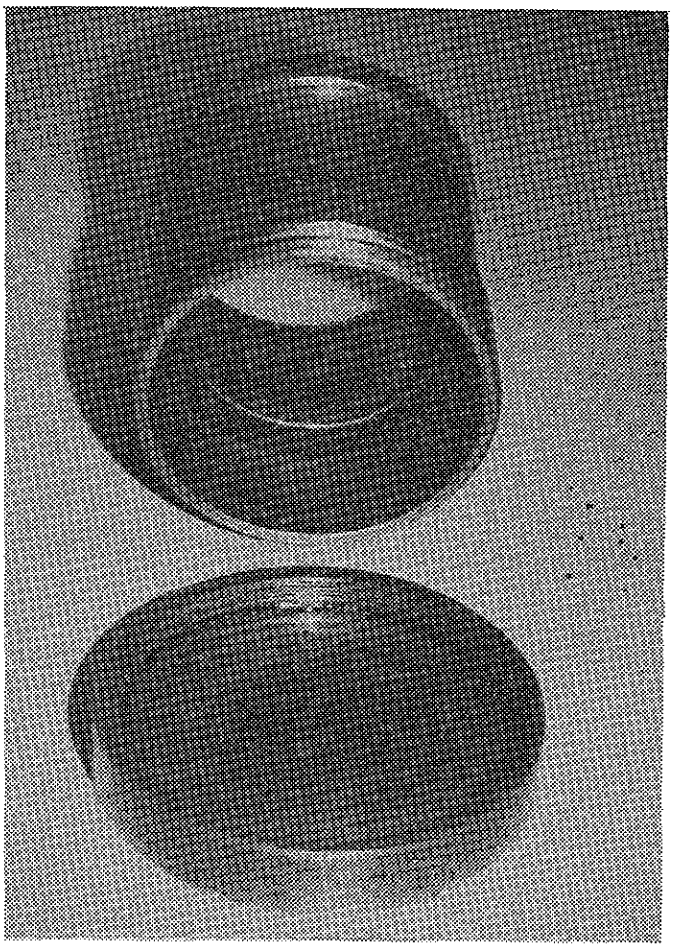

FIGURE 5

FABRICATION MOLD AND BASE (RINGS IN PLACE)

ClibPDF - www.fastio.com

maintain a specimen temperature of 40°F during testing (the current test temperature requirement), it was decided to determine if specimens could be tested at a less sensitive temperature and still obtain acceptable results. It was also decided to determine if kneading compaction could be used in lieu of static compaction in order to provide better repeatability and to provide a compactive effort more typical of field conditions.

To obtain the desired target density for the test specimens, the current procedure utilizes static compaction to obtain 95 percent of the density of a pilot specimen prepared using 500 psi and 150 tamps with the kneading compactor. The 95 percent density is used because this is the minimum target density desired when compacting AC mixes in the field. However, in this study, after some trial and error in the laboratory using various combinations (loadings and number of tamps), it was found that 95 ± 2 percent could not always be achieved using the kneading compactor. A density of 97 percent or higher was usually obtained. Because different aggregate sources exhibit different properties (angularity, percent crushed particles, surface texture, etc.), various AC mixes do not require the same compactive effort when using kneading compaction. It was felt that not being able to obtain the desired 95 ± 2 percent density may not present a problem in the testing. Since field compaction includes a kneading action, it was decided that it was important to use this type of compaction in the laboratory for this research. It was believed that the kneading compaction would provide more repeatable results even though the density may vary by two or three percent. The use of the kneading compactor was therefore continued in the study. A pressure of 350 psi and 100 tamps were used.

Kneading compaction will generally produce a rather tight surface, so there was a concern that this would inhibit surface abrasion loss to some degree. It was therefore decided to test the bottom of the specimen as well as the top as was done in early studies (1). The data in Table 7 shows that lower abrasion loss values were obtained using kneading compaction as compared to those obtained using static compaction.

However, the data also shows that the values obtained using the kneading compactor were generally more consistent (lower standard

ClibPDF - www.fastio.com

deviation). Even though the overall values were lower, which is not preferable, this should not present a problem.

There was no significant difference between values obtained using "kneading compaction/top of specimen" and temperatures of 40°F and 77°F. However, the values obtained using "kneading compaction/bottom of specimen" were slightly higher and had a higher standard deviation than those using the top of the specimen. In general, the larger values are preferred in that they provide more distinction between the quality of various aggregate mixes. The data does show a higher standard deviation using the bottom of the specimen and a test temperature of 40°F. The value (4.7) was very similar to those obtained using static compaction (4.3, 5.1). This would indicate that a 77°F temperature would be preferable when testing the bottom of the specimen. There was also no significant difference between the standard deviation for the testing using "kneading compaction/bottom of the specimen" at 77°F temperatures and the standard deviation obtained using the "kneading compaction/top of the specimen". Because of this and the fact that higher values were obtained using the bottom of the specimen, it was concluded that this combination was the best and should be used for further testing in the study. This combination was also preferable from the standpoint that a less sensitive test temperature would be used and kneading compaction, which is more comparable with actual field compaction, would be used.

Summary of Phase I

After completion of Phase I, it was apparent that the test procedure could be modified to permit kneading compaction and a test temperature of 77°F. In fact, the data in Table 7 indicates that these changes are preferable. Especially important is that testing at 77° F is easier to maintain. The modifications to the test equipment also greatly improved the repeatability of the test results. Thus, California Test 360 was revised (Appendix A) to reflect a new compaction procedure and test temperature. Data presented in Phases II, III and IV were obtained using the new revised procedure with the modified equipment.

ClibPDF - www.fastio.com

2) Phase II - Determine the effect of asphalt source and viscosity on the test results.

In this phase, both asphalt grade and source were studied to determine their effect on abrasion loss. A shortage of material prevented completion of scheduled testing on aggregate source B. The test data is presented in Tables 8 thru 13 and Figures 6, 7 and 8.

The data indicate that asphalt source could benefit a mix by increasing its resistance to abrasion. In this study, one particular asphalt source (#3), in almost every case, provided lower abrasion loss. It, therefore, appears that if a borderline aggregate source were to be considered, different asphalt sources could be selected by the supplier to be tested to see if one would improve the performance sufficiently to make the aggregate source acceptable.

Figures 6, 7, and 8 also indicate that a lower viscosity asphalt could in some cases improve the resistance to abrasion. However, in practice this may not always be possible due to climate restrictions such as high ambient temperatures which may lead to flushing, bleeding or even instability.

3) Phase III - Determine the effect of aggregate source and gradation on test results.

In this phase, three different aggregate sources were studied to determine their effect on abrasion loss. Unfortunately, a shortage of material prevented completion of scheduled testing with aggregate source B. The test data is presented in Tables 8 thru 13 and Figures 9, 10 and 11.

In general, the surface abrasion loss was less than 2.5 gram/square inch for aggregate source A and exceeded 2.5 grams/square inch in all but one case with sources B and C. However, the grading (maximum size aggregate) did not show any pattern of influence on the test results. This, therefore, promotes the idea that one specified surface abrasion limit can be assigned for all gradings used in this research (3/4, 1/2 and 3/8 inch maximum).

ClibPDF - www.fastio.com

ClibPDF - www.fastio.com

EFFECT OF ASPHALT SOURCE AND VISCOSITY
ON ABRASION LOSS (3/4" MAX. AGG.)

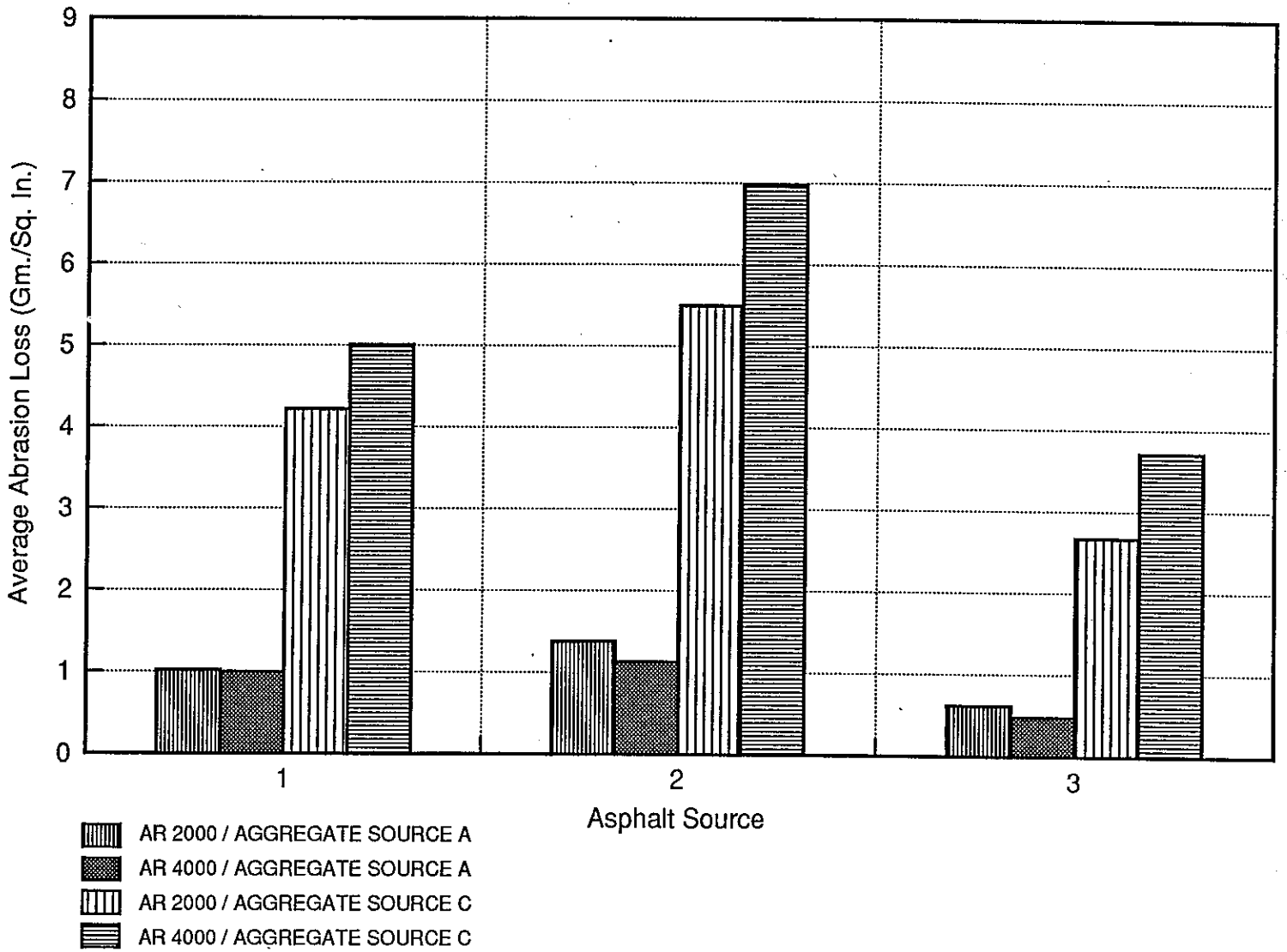

Figure 6

ClibPDF - www.fastio.com

EFFECT OF ASPHALT SOURCE AND VISCOSITY
ON ABRASION LOSS (1/2" MAX. AGG.)

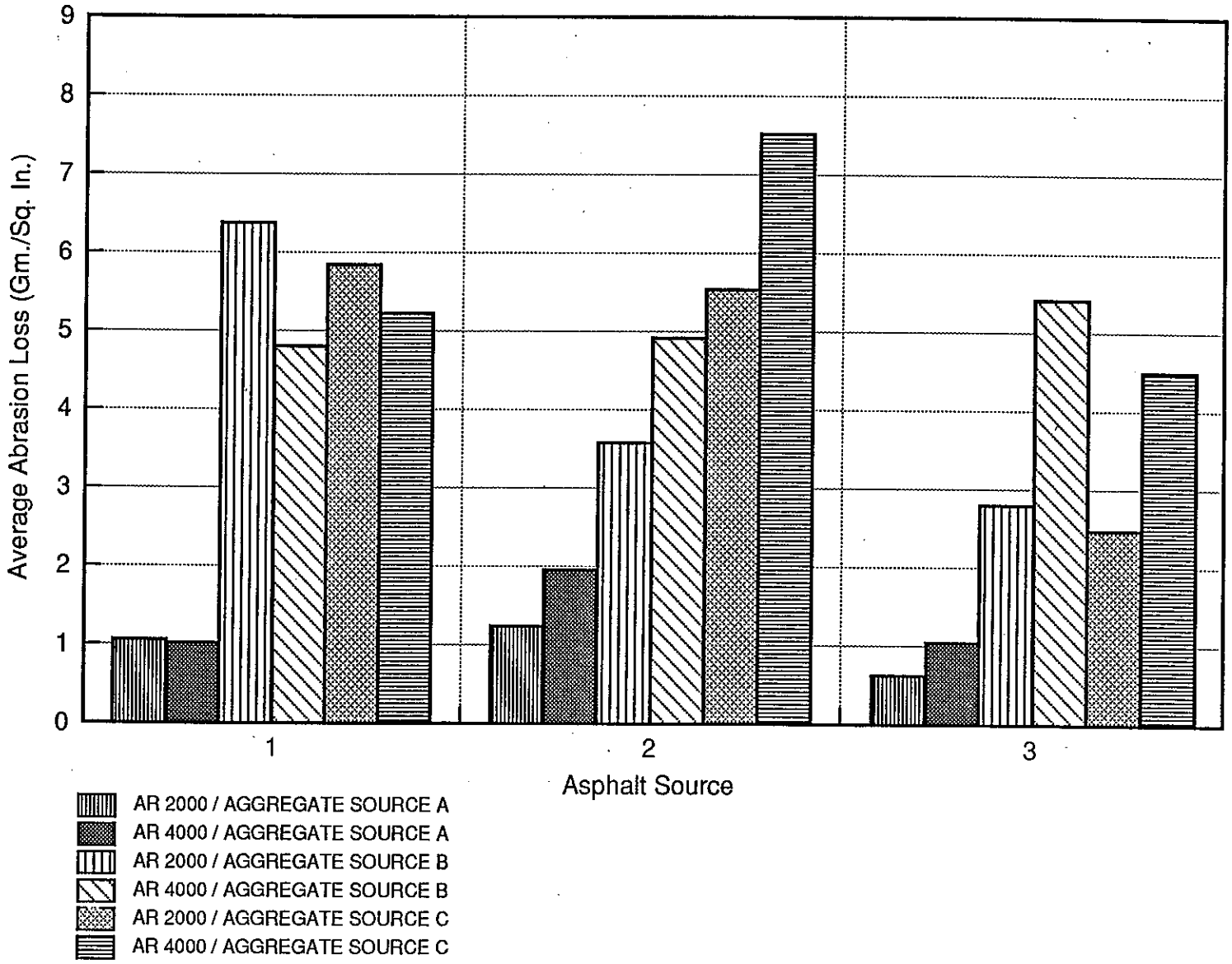

Figure 7

ClibPDF - www.fastio.com

EFFECT OF ASPHALT SOURCE AND VISCOSITY
ON ABRASION LOSS (3/8" MAX. AGG.)

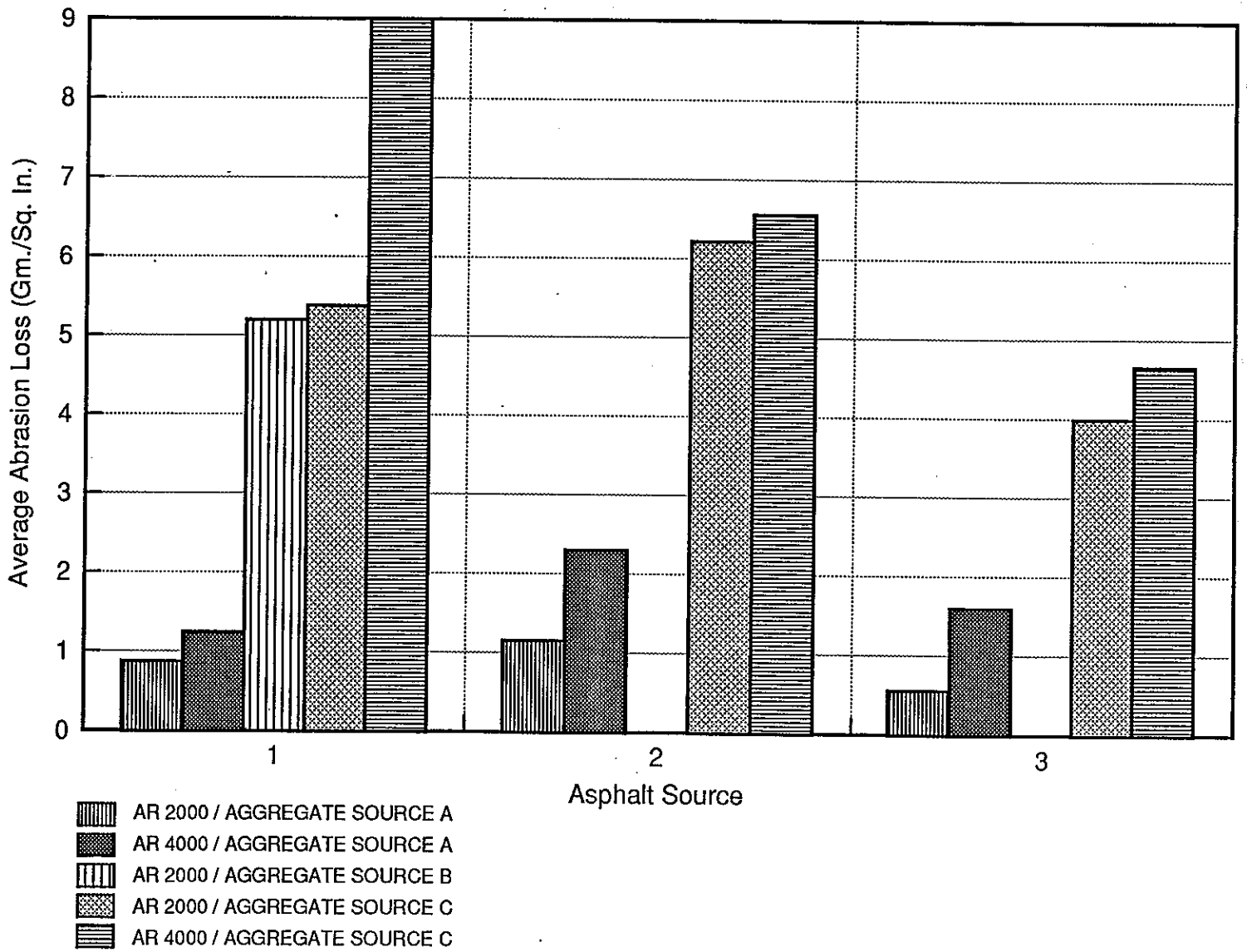

Figure 8

Also, during this phase one series of tests (Table 14) was completed using rubber balls. Only the asphalt-aggregate combinations resulting in the greatest abrasion loss with steel balls was selected for testing with rubber balls. This testing was conducted to show that the use of rubber balls does not always identify aggregate sources which perform poorly in the field. In particular, aggregate source C is considered undesirable for use in the field because of past poor performance. The acceptable limit for abrasion loss using the existing procedure and rubber balls is a maximum loss of 15.0 grams. Using the revised procedure, the equivalent value (because of reduced surface area) would be about 9.0 grams. Looking at the values in Table 14, 1.9 grams is the highest loss attained. This is very low when considering 9.0 grams maximum, so the aggregate would be considered acceptable. Thus, although this aggregate source has shown poor performance, the test results indicate that it should perform well. If the revised test method (steel balls) was used with a specification limit of 2.5 grams/square inch (see Phase IV below), Table 12 and Figure 10 show the results would be 6.56 to 7.51 grams/square inch, depending on the size of the aggregate used. These results would clearly indicate that the asphalt/aggregate combination would not be acceptable. It was concluded that the use of rubber balls is of little value, when trying to identify aggregates that will perform poorly in the roadway.

4) Phase IV - Determine a preliminary specification limit for surface abrasion loss.

The goal in this phase was to determine a preliminary specification limit for surface abrasion loss that could be used from this point in time forward. It is recognized that there are numerous aggregate sources statewide and that only a few have been tested using the new procedure and revised equipment. However, the few sources used for testing in this study represent some of the best and worst and it is felt that the data obtained provided adequate information to set a preliminary specification limit. Therefore, based on the data obtained and using Figures 9, 10, and 11, the value of 2.5 grams/square inch was chosen. This value should differentiate between aggregates that will perform well in the field and those that may not.

ClibPDF - www.fastio.com

ClibPDF - www.fastio.com

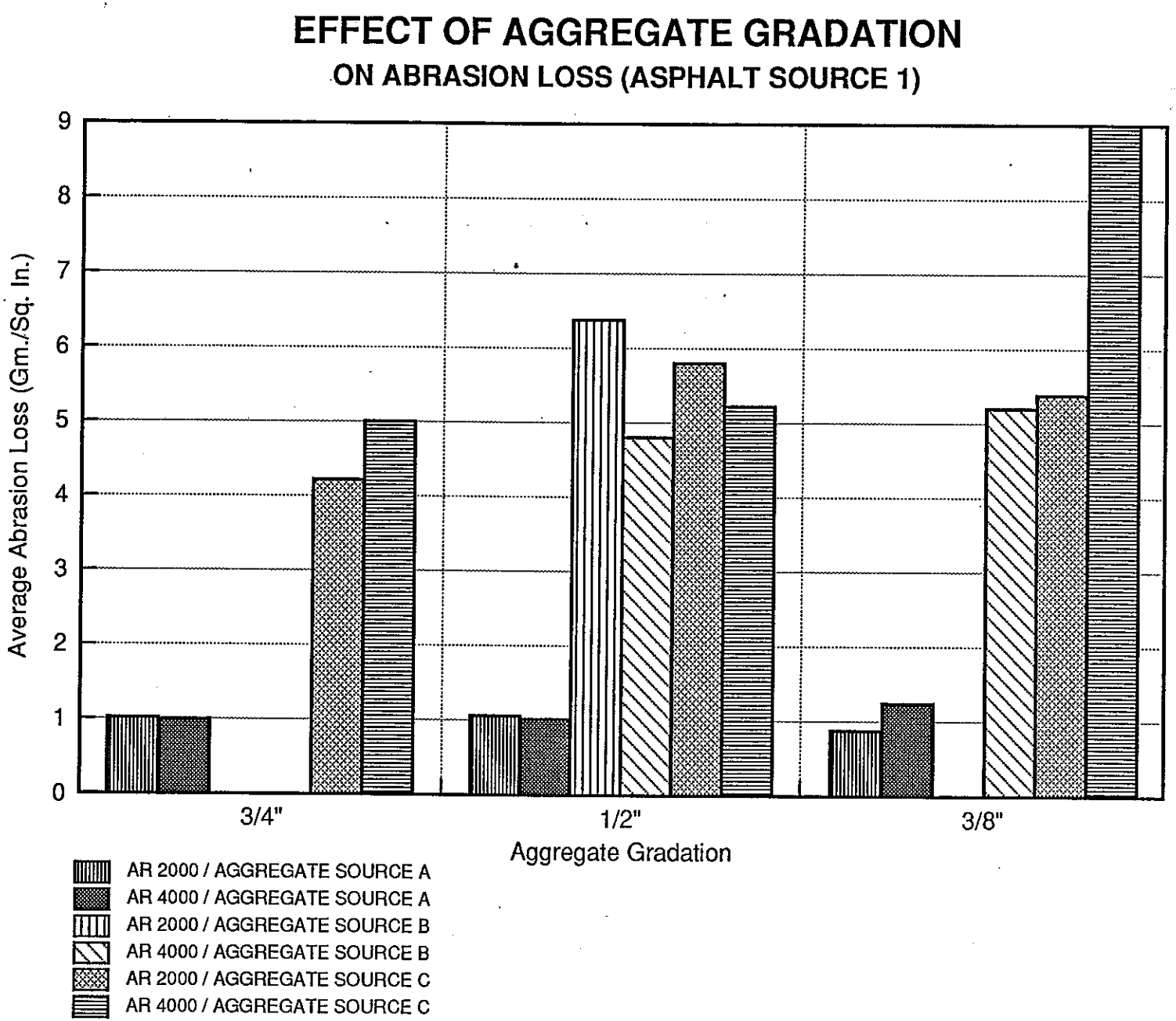

Figure 9

ClibPDF - www.fastio.com

EFFECT OF AGGREGATE GRADATION
ON ABRASION LOSS (ASPHALT SOURCE 2)

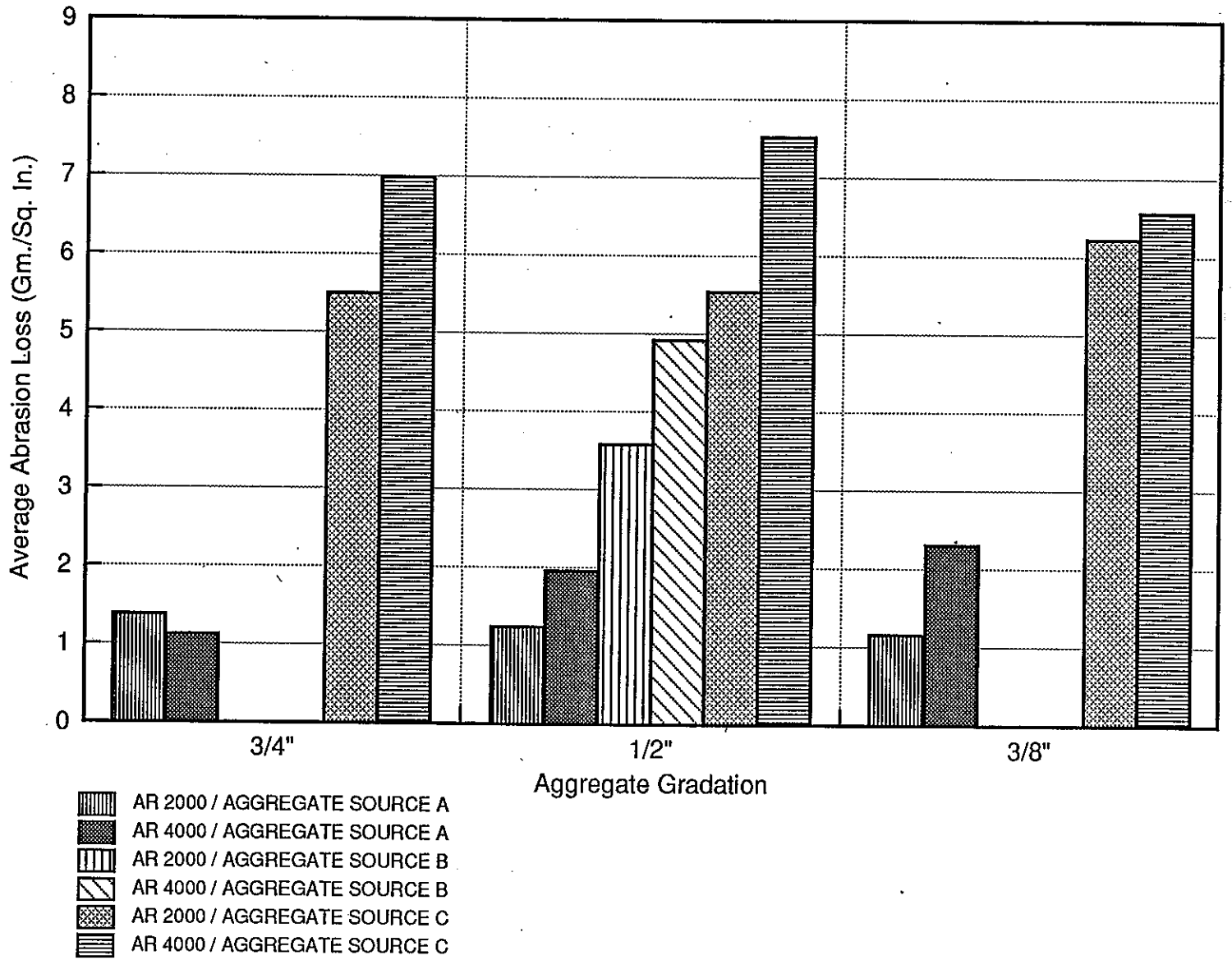

Figure 10

ClibPDF - www.fastio.com

EFFECT OF AGGREGATE GRADATION
ON ABRASION LOSS (ASPHALT SOURCE 3)

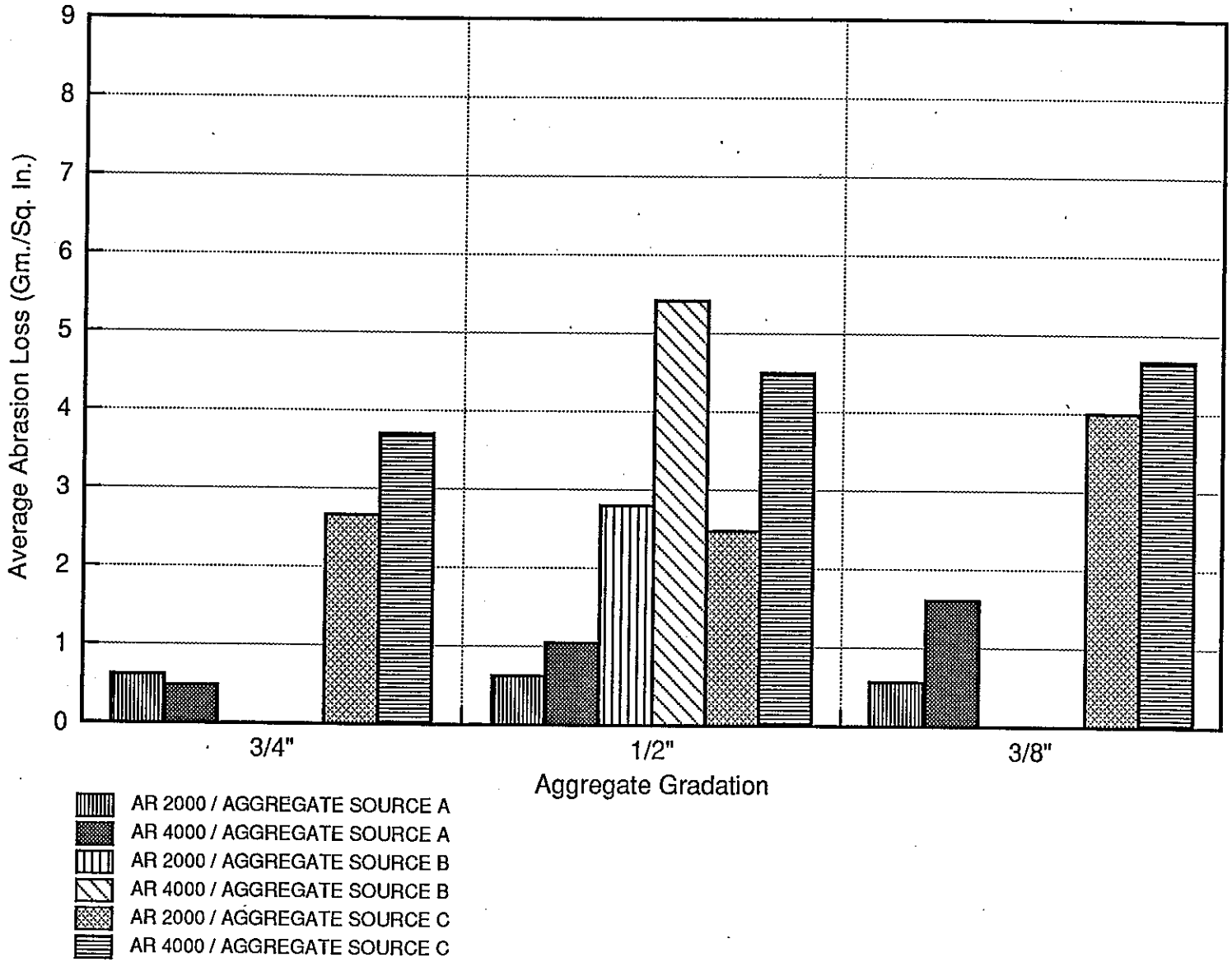

Figure 11

As indicated in the Implementation Section of this report, NTM&R will coordinate a testing program with all district testing labs, using the new equipment and procedure, to determine a surface abrasion loss typical for aggregates used in the state. The results of this program will provide data for appropriate specifications and at that point, the preliminary specification limit set in this study (2.5 gm./sq. in.) will be either verified or amended for use statewide.

C. Summary

This study achieved its overall goal which was to evaluate and revise California Test 360 in order that it would provide more repeatable test results and would adequately identify aggregates that may perform poorly in AC mixes in the roadway. Due to time and financial constraints, obviously all aggregate sources in the state could not be evaluated, but, through further work with the district labs, additional testing will be accomplished.

This study revealed that surface abrasion loss can be affected by asphalt source or grade and by aggregate source. It also indicated that changing the maximum size aggregate in the grading does not significantly affect the test results. This suggests that certain aggregates, when combined with certain asphalts, will provide superior mixes in terms of surface abrasion resistance. This would further suggest that it may be more cost effective for the state to dictate, by contract, the aggregate and asphalt source for projects where surface abrasion is a primary concern (based on past performance) rather than (as is current policy) accept the aggregate and asphalt selected by the lowest bidder on these projects (contingent upon compliance with current asphalt and aggregate specifications).

ClibPDF - www.fastio.com

VII. REFERENCES

1. Zube E., Skog J., "New Test Methods for Studying the Effect of Water Action on Bituminous Mixtures", February 18, 1963, presented at the Asphalt Paving Technologist Meeting in San Francisco, California.

2. Zube E., Skog J., and Scrimsher T., "Bituminous Mix Overlay for PCC Pavements Subjected to Tire Chains", June 1968, Report No. 643392, State of California.

3. California Test 360, "Method of Test for Surface Abrasion of Compacted Bituminous Mixtures", Manual of Test, Volume 2, State of California, Department of Transportation, Transportation Laboratory.

ClibPDF - www.fastio.com

VIII. TABLES

ClibPDF - www.fastio.com

TABLE 1
AGGREGATE GRADATIONS (% Passing)

Sieve	3/4" Max. As Used			Spec.[1]	1/2" Max. As Used			Spec.[1]	3/8" Max. As Used			Spec.[1]
	A[2]	B	C		A	B	C		A	B	C	
1"	–	–	–	100	–	–	–	–	–	–	–	–
3/4	100	–	100	95-100	–	–	–	100	–	–	–	–
1/2	83	–	85	–	100	100	100	95-100	–	–	–	100
3/8	70	–	75	65-80	85	85	88	80-95	100	100	100	95-100
4	47	–	51	44-59	65	68	64	54-71	72	75	79	67-83
8	36	–	39	31-45	47	50	48	38-54	58	60	56	52-69
16	26	–	28	–	35	37	36	–	44	44	40	–
30	18	–	20	13-26	25	27	25	17-32	30	30	28	23-40
50	12	–	13	–	15	16	15	–	20	19	17	–
100	6	–	7	–	10	11	8	–	12	11	10	–
200	5	–	4	3-8	6	7	5	3-8	8	7	7	3-10

Notes:

1. 1988 California Standard Specifications.
2. Aggregate Source.

ClibPDF - www.fastio.com

Table 2

Asphalt Properties

Asphalt Source	Absolute Viscosity[1] @ 140°F (Poise)		Penetration[2]	
	AR 2000	AR 4000	AR 2000	AR 4000
1	2529	4445	50	30
2	2291	3710	46	30
3	1895	4140	100	60

Notes:

1. AASHTO Test T240 and AASHTO Test T202 were used.
2. AASHTO Test T240 and AASHTO Test T49 were used.

TABLE 3

Optimum Bitumen Contents (%)[1] (Aggregate Source A)

Asphalt Source	Asphalt Grade	Grading		
		3/4"	1/2"	3/8"
1	AR 2000	5.3	6.0	6.8
	AR 4000	5.5	6.5	7.0
2	AR 2000	5.3	6.3	6.8
	AR 4000	5.5	6.0	6.5
3	AR 2000	4.8	6.0	6.8
	AR 4000	5.2	6.2	6.2
"K" Factor[2]		1.2	1.2	1.3

Notes:

1. California Test 367 was used.
2. California Test 303 was used.

ClibPDF - www.fastio.com

TABLE 4

Optimum Bitumen Contents (%)[1] (Aggregate Source B)

Asphalt Source	Asphalt Grade	Grading		
		3/4"	1/2"	3/8"
1	AR 2000	--	6.8	--
	AR 4000	--	7.3	7.6
2	AR 2000	--	7.3	--
	AR 4000	--	7.0	--
3	AR 2000	--	6.5	--
	AR 4000	--	7.0	--
"K" Factor[2]		--	1.2	1.1

Notes:
1 California Test 367 was used.
2 California Test 303 was used.

TABLE 5

Optimum Bitumen Contents (%)[1] (Aggregate Source C)

Asphalt Source	Asphalt Grade	Grading		
		3/4"	1/2"	3/8"
1	AR 2000	6.0	6.5	6.8
	AR 4000	5.9	6.6	6.3
2	AR 2000	5.8	6.5	7.0
	AR 4000	5.6	6.3	7.3
3	AR 2000	5.5	7.0	7.7
	AR 4000	6.1	6.6	7.3
"K" Factor[2]		1.2	1.2	1.2

Notes:
1 California Test 367 was used.
2 California Test 303 was used.

ClibPDF - www.fastio.com

TABLE 6

Comparison of Data Between Machines

Test Specimen	Machine #1		Machine #2	
	Current Mold	Modified Mold	Current Mold	Modified Mold
1	14.2	11.8	20.2	14.6
2	14.7	15.1	20.1	14.1
3	28.6	16.5	25.2	16.0
4	17.4	12.2	22.1	14.8
5	10.5	16.1	11.0	15.2
6	11.8	17.0	19.8	19.0
7	14.8	12.6	21.6	20.3
8	15.7	12.8	31.0	14.1
9	16.0	16.0	21.3	15.4
10	15.9	14.5	21.3	16.9
$\overline{X}$	16.0	14.5	21.4	16.0
s	4.9	2.0	5.0	2.1

Notes:

1. Static compaction was used.
2. Values represent grams of material abraded from specimen surface.
3. California Test 360, Method B, was used.
4. Asphalt Source 1, AR-4000 was used.
5. Aggregate Source A was used.
6. $\overline{X}$ = Average.
7. s = Standard Deviation.

ClibPDF - www.fastio.com

TABLE 7

Effect of Compaction, Temperature and Testing Surface on Abrasion Loss

Static Compaction (Double Plunger)			
Testing Temp.		40°F	77°F
Specimen	A	44.6	38.3
	B	38.7	42.4
	C	39.6	48.6
	D	40.1	37.6
	E	48.8	35.8
$\overline{X}$		42.4	40.5
s		4.3	5.1

Kneading Compaction - Top of Specimen			
Testing Temp.		40°F	77°F
Specimen	A	22.0	24.5
	B	21.2	20.3
	C	20.2	18.0
	D	16.9	18.9
	E	19.5	20.4
$\overline{X}$		20.0	20.4
s		2.0	2.5

Kneading Compaction - Bottom of Specimen			
Testing Temp.		40°F	77°F
Specimen	A	23.7	33.6
	B	24.6	28.2
	C	30.5	28.4
	D	18.2	27.3
	E	28.0	--
$\overline{X}$		25.0	29.4
s		4.7	2.9

Notes:

1. Asphalt Source 1, AR-4000 was used.
2. Aggregate Source A was used.
3. Values represent grams of material abraded from specimen surface.
4. Kneading compaction was performed at 350 psi foot pressure.
5. Compaction temperature of 230°F was used.
6. $\overline{X}$ = Average.
7. s = Standard Deviation.

ClibPDF - www.fastio.com

TABLE 8

Effect of Aggregate Gradation on Abrasion Loss (Asphalt Source #1, AR-2000)

Aggregate Source	Test Specimen	Gradation					
		3/4"		1/2"		3/8"	
		Grams Loss	Grams/ sq. in.	Grams Loss	Grams/ sq. in.	Grams Loss	Grams/ sq. in.
A	A	6.2	0.75	8.2	0.99	6.2	0.75
	B	8.5	1.02	7.8	0.94	7.2	0.87
	C	10.4	1.25	10.0	1.21	8.3	1.00
	$\overline{X}$	8.4	1.01	8.7	1.05	7.2	0.87
	s	2.10	0.25	1.17	0.14	1.05	0.13
Asphalt Content		5.0%		5.7%		6.5%	
B	A	--	--	51.8	6.27	--	--
	B	--	--	54.1	6.55	--	--
	C	--	--	51.8	6.29	--	--
	$\overline{X}$	--	--	52.6	6.37	--	--
	s	--	--	1.33	0.16	--	--
Asphalt Content		--		6.5%		--	
C	A	39.6	4.79	39.3	4.76	45.1	5.46
	B	28.3	3.42	59.4	7.19	45.0	5.45
	C	40.2	4.42	46.1	5.58	43.3	5.24
	$\overline{X}$	36.0	4.21	48.3	5.84	44.5	5.38
	s	6.70	0.71	10.22	1.24	1.01	0.12
Asphalt Content		5.7%		6.2%		6.5%	

Notes:

$\overline{X}$ = Average.
s = Standard Deviation.

ClibPDF - www.fastio.com

TABLE 9

Effect of Aggregate Gradation on Abrasion Loss (Asphalt Source #2, AR-2000)

Aggregate Source	Test Specimen	Gradation					
		3/4"		1/2"		3/8"	
		Grams Loss	Grams/ sq. in.	Grams Loss	Grams/ sq. in.	Grams Loss	Grams/ sq. in.
A	A	13.6	1.64	11.2	1.40	8.8	1.06
	B	8.6	1.04	10.6	1.28	10.0	1.21
	C	12.2	1.43	8.3	1.00	9.8	1.19
	$\overline{X}$	11.5	1.37	10.0	1.23	9.5	1.15
	s	2.58	0.30	1.53	0.21	0.64	0.08
Asphalt Content		5.0%		6.0%		6.5%	
B	A	--	--	27.1	3.28	--	--
	B	--	--	24.7	2.99	--	--
	C	--	--	36.8	4.45	--	--
	$\overline{X}$	--	--	29.5	3.57	--	--
	s	--	--	6.41	0.77	--	--
Asphalt Content		--		7.0%		--	
C	A	39.1	4.73	41.4	5.01	52.9	6.40
	B	36.6	4.43	49.8	6.03	51.4	6.22
	C	60.5	7.32	45.8	5.54	50.0	6.05
	$\overline{X}$	45.4	5.49	45.7	5.53	51.4	6.22
	s	13.14	1.59	4.20	0.51	1.45	0.18
Asphalt Content		5.5%		6.2%		6.7%	

Notes:

$\overline{X}$ = Average.
s = Standard Deviation.

ClibPDF - www.fastio.com

TABLE 10

Effect of Aggregate Gradation on Abrasion Loss (Asphalt Source #3, AR-2000)

Aggregate Source	Test Specimen	Gradation					
		3/4"		1/2"		3/8"	
		Grams Loss	Grams/ sq. in.	Grams Loss	Grams/ sq. in.	Grams Loss	Grams/ sq. in.
A	A	5.3	0.64	5.4	0.65	3.8	0.46
	B	5.0	0.61	5.3	0.64	4.7	0.57
	C	4.8	0.58	4.7	0.57	5.4	0.65
	$\overline{X}$	5.0	0.61	5.1	0.62	4.6	0.56
	s	0.25	0.03	0.38	0.04	0.80	0.10
Asphalt Content		4.5%		5.7%		6.5%	
B	A	--	--	21.6	2.61	--	--
	B	--	--	21.3	2.58	--	--
	C	--	--	26.4	3.19	--	--
	$\overline{X}$	--	--	23.1	2.79	--	--
	s	--	--	2.86	0.34	--	--
Asphalt Content		--		6.2%		--	
C	A	23.9	2.89	22.4	2.71	28.9	3.50
	B	20.0	2.42	20.7	2.50	31.2	3.78
	C	22.1	2.67	18.1	2.19	38.9	4.71
	$\overline{X}$	22.0	2.66	20.4	2.47	33.0	3.99
	s	1.95	0.24	2.17	0.26	5.24	0.63
Asphalt Content		5.2%		6.7%		7.4%	

Notes:

$\overline{X}$ = Average.
s = Standard Deviation.

ClibPDF - www.fastio.com

TABLE 11

Effect of Aggregate Gradation on Abrasion Loss (Asphalt Source #1, AR-4000)

Aggregate Source	Test Specimen	Gradation 3/4" Grams Loss	3/4" Grams/ sq. in.	1/2" Grams Loss	1/2" Grams/ sq. in.	3/8" Grams Loss	3/8" Grams/ sq. in.
A	A	8.2	0.99	8.9	1.09	10.1	1.22
	B	7.1	0.86	7.7	0.93	8.9	1.08
	C	9.2	1.11	8.4	1.02	11.8	1.43
	$\overline{X}$	8.2	0.99	8.3	1.01	10.3	1.24
	s	1.05	0.13	0.60	0.08	1.46	0.18
Asphalt Content		5.2%		6.2%		6.7%	
B	A	--	--	39.8	4.82	53.8	6.51
	B	--	--	41.8	5.06	33.5	4.05
	C	--	--	37.4	4.53	41.7	5.05
	$\overline{X}$	--	--	39.7	4.80	43.0	5.20
	s	--	--	2.20	0.27	10.21	1.24
Asphalt Content		--		7.0%		7.3%	
C	A	38.7	4.60	40.2	4.86	78.7	9.52
	B	47.4	5.74	40.9	4.95	70.1	8.48
	C	38.6	4.67	48.4	5.86	74.3	8.99
	$\overline{X}$	41.6	5.00	43.2	5.22	74.4	9.00
	s	5.05	0.64	4.55	0.55	4.30	0.52
Asphalt Content		5.6%		6.3%		6.0%	

Notes:

$\overline{X}$ = Average.
s = Standard Deviation.

ClibPDF - www.fastio.com

TABLE 12

Effect of Aggregate Gradation on Abrasion Loss (Asphalt Source #2, AR-4000)

Aggregate Source	Test Specimen	Gradation 3/4" Grams Loss	3/4" Grams/ sq. in.	1/2" Grams Loss	1/2" Grams/ sq. in.	3/8" Grams Loss	3/8" Grams/ sq. in.
A	A	9.7	1.17	16.8	2.03	19.7	2.38
	B	9.8	1.19	15.1	1.83	19.0	2.30
	C	8.2	0.99	16.5	2.00	18.3	2.21
	$\overline{X}$	9.2	1.12	16.1	1.95	19.0	2.30
	s	0.90	0.11	0.91	0.11	0.70	0.09
Asphalt Content		5.2%		5.7%		6.2%	
B	A	--	--	29.2	3.53	--	--
	B	--	--	52.9	6.40	--	--
	C	--	--	39.6	4.79	--	--
	$\overline{X}$	--	--	40.6	4.91	--	--
	s	--	--	11.88	1.44	--	--
Asphalt Content		--		6.7%		--	
C	A	56.1	6.79	61.3	7.42	63.8	7.72
	B	63.3	7.66	67.3	8.14	48.1	5.82
	C	53.6	6.49	57.5	6.96	50.8	6.15
	$\overline{X}$	57.7	6.98	62.0	7.51	54.2	6.56
	s	5.04	0.61	4.94	0.59	8.39	1.02
Asphalt Content		5.3%		6.0%		7.3%	

Notes:

$\overline{X}$ = Average.
s = Standard Deviation.

ClibPDF - www.fastio.com

TABLE 13

Effect of Aggregate Gradation on Abrasion Loss (Asphalt Source #3, AR-4000)

Aggregate Source	Test Specimen	Gradation					
		3/4"		1/2"		3/8"	
		Grams Loss	Grams/ sq. in.	Grams Loss	Grams/ sq. in.	Grams Loss	Grams/ sq. in.
A	A	3.8	0.46	7.3	0.88	14.7	1.78
	B	3.4	0.41	9.1	1.10	12.3	1.49
	C	4.8	0.58	9.3	1.13	12.7	1.54
	$\overline{X}$	4.0	0.48	8.6	1.04	13.2	1.60
	s	0.72	0.09	1.10	0.14	1.29	0.16
Asphalt Content		4.9%		5.9%		5.9%	
B	A	--	--	50.6	6.12	--	--
	B	--	--	38.5	4.66	--	--
	C	--	--	45.1	5.46	--	--
	$\overline{X}$	--	--	44.7	5.41	--	--
	s	--	--	6.06	0.73	--	--
Asphalt Content		--		6.7%		--	
C	A	27.3	3.30	36.8	4.45	41.1	4.97
	B	34.2	4.14	37.0	4.48	33.6	4.07
	C	30.3	3.67	37.4	4.53	40.9	4.95
	$\overline{X}$	30.6	3.70	37.1	4.49	38.5	4.66
	s	3.46	0.42	0.31	0.04	4.27	0.51
Asphalt Content		5.8%		6.3%		7.0%	

Notes:

$\overline{X}$ = Average.
s = Standard Deviation.

ClibPDF - www.fastio.com

TABLE 14

Effect of Aggregate Gradation on Abrasion Loss Using Rubber Balls and Aggregate Source C (Asphalt Source #2, AR4000)

Test Specimen	Gradation					
	3/4"		1/2"		3/8"	
	Grams Loss	Grams/ sq.in.	Grams Loss	Grams/ sq.in.	Grams Loss	Grams sq.in.
A	1.1	0.13	2.3	0.28	0.4	0.05
B	1.9	0.23	2.0	0.24	0.9	0.11
C	0.7	0.08	1.3	0.16	0.4	0.05
$\overline{X}$	1.2	0.15	1.9	0.23	0.6	0.07
s	0.61	0.08	0.51	0.06	0.29	0.03
Asphalt Content	5.3%		6.0%		7.0%	

Notes:

$\overline{X}$ = Average
s = Standard Deviation

ClibPDF - www.fastio.com

APPENDIX A

Current and Revised California Test 360

ClibPDF - www.fastio.com

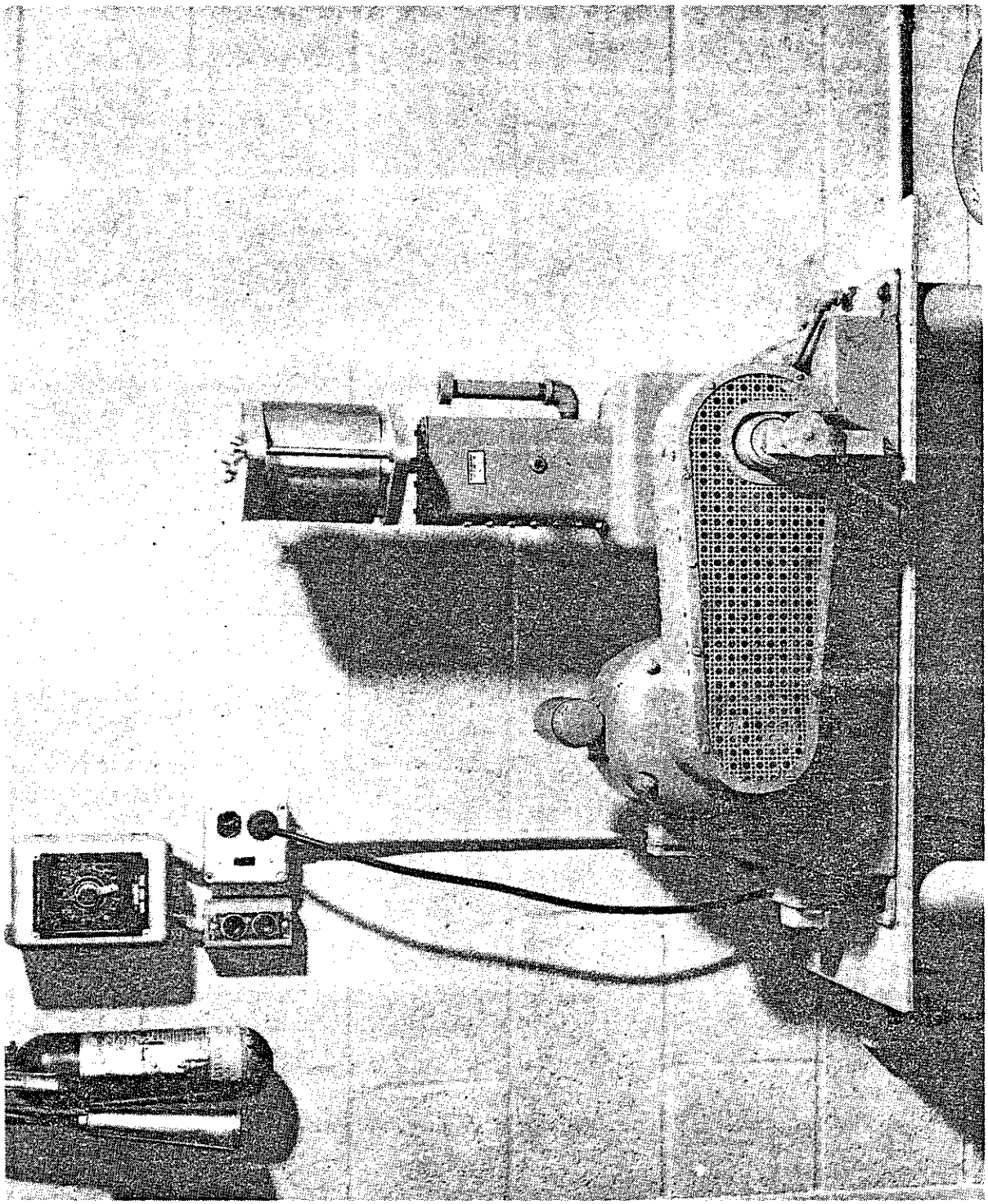

FIGURE 1

ClibPDF - www.fastio.com

REVISED

METHOD OF TEST FOR SURFACE ABRASION OF COMPACTED BITUMINOUS MIXTURES

A. SCOPE

The surface abrasion test measures the ability of a compacted bituminous mixture to resist surface abrasion or raveling in the presence of water or when subjected to snow tire chains.

This standard may involve hazardous materials, operations, and equipment. This standard does not purport to address all of the safety problems associated with its use. It is the responsibility of whoever chooses this standard to consult and establish appropriate safety and health practices and determine the applicability of regulatory limitations prior to use. Those using this standard do so at their own risk.

B. APPARATUS

1. Mechanical shaker with a 1 ± 1/8 inch vertical stroke capable of operating at 1200 ±10 cycles per minute, for shaking mold containing sample (see Figure 1).

2. Eight steel balls 13/32 inch diameter and weighing 4.5 ± 0.3 grams each.

3. Steel mold 4.000 ±0.005 inch diameter x 5.00 ±0.10 inch high (for fabrication of specimen).

4. Steel surface abrasion mold 4.000 ±0.005 inch diameter x 5.00 ±0.10 inch high with a built in shoulder allowing a constant "bounce" space of 3 ± 1/8 inch above specimen.

5. Mold holder for use in specimen fabrication.

6. Mechanical kneading compactor.

7. Hydraulic press capable of applying a minimum load of 40,000 lbs.

8. Graduated cylinder with 250 ml. capacity.

9. Pan, aluminum, having a nominal size of 7 1/2 inch diameter x 2 1/2 inch deep.

10. Wash bottle, polyethylene.

11. Balance, capacity 4,500 grams, sensitive to 0.1 gram.

12. Rubber ring, 1/16 inch thick, 4 inch outside diameter, 3 1/4 inch inside diameter.

ClibPDF - www.fastio.com

the following procedure for each specimen:

a. Multiply the weight obtained in Step 13 by .95, and place this amount of mix in mold as outlined in Steps 1 through 8.
b. Place a 4" cardboard disc on top of the spaded mix and remove mold and mold holder from the spader.
c. Place preheated follower on top of the spaded mix and place mix and assembly in the press for static loading.
d. Press or compact the mix to a height of 2.0" ± .05".
e. Let the compacted specimen remain at room temperature for a minimum of 1 hour prior to start of soaking.
f. Pour 500 mls. of water on specimen in mold (both setting in pan) and allow to stand undisturbed at room temperature for 20 hrs ± 1 hour.

D. TEST PROCEDURES

Method A (Rubber Balls)

1. After 20 hours of soaking, pour the water in the pan, if any, back into the mold containing the specimen, and place mold with sample and pan into a 100°F oven for 5 hours. Surface of specimen must be kept covered with water during this heating period.
2. Take mold containing specimen from oven, pour off and save water, then remove specimen from mold.
3. Place specimen in abrasion mold.
4. Pour 250 mls. of heated water (water removed in Step 2) onto the surface of specimen.
5. Place four clean rubber balls into the mold.
6. Use wing nuts to lock mold into place on mechanical shaker.
7. Shake sample at 1200 ± 10 cycles per minute for 15 minutes, then remove from mechanical shaker.
8. Remove rubber balls and pour contents from mold into a tared container. Use a wash bottle to wash all fines from the surface of the sample into the container.
9. Let the container stand for one hour, then decant off as much of the clear water as possible.
10. Place the container in a drying oven (230°F) and dry to a constant weight.
11. Weigh the container with abraded material. Subtract container tare weight and record the difference as grams of abrasion loss.
12. Repeat Steps 1 through 11 for the other two specimens of the triplicate specimens (See Step 15 of B). Then average results of the three tests.

Method B (Steel Balls)

(Primarily used for evaluating abrasion caused by chain wear)

1. After 20 hours of soaking, pour the water in the pan if any, back into the mold containing the specimen, and place mold with sample and pan into refrigerator maintained at 40°F for five hours.
2. Take mold containing specimen from refrigerator, pour off and save water, then remove specimen from mold.
3. Place specimen in abrasion mold.
4. Pour 250 mls. of cool water (water removed in Step 2) onto the surface of specimen.
5. Place eight clean steel balls into the mold.
6. Use wing nuts to lock mold into place on mechanical shaker.
7. Shake sample at 1200 ± 10 cycles per minute for 15 minutes, then remove from mechanical shaker.
8. Remove steel balls and pour contents from mold into a tared container. Use a wash bottle to wash all fines from the surface of the sample into the container.
9. Let the container stand for one hour, then decant off as much of the clear water as possible.
10. Place the container in a drying oven (230°F) and dry to a constant weight.
11. Weigh the container with abraded material. Subtract container tare weight and record the difference as grams of abrasion loss.
12. Repeat Steps 1 through 11 for two more test specimens identical to first. Then average the results from the three specimens.

E. PRECAUTIONS

1. The sample should be transferred from the 100°F oven, or the refrigerator, to the shaking device as quickly as possible.
2. The rubber balls shall be free of asphalt prior to testing. The asphalt shall be cleaned from the rubber balls with a cleaning solvent and allowed to dry for a minimum of 30 minutes prior to additional testing.
3. Both steel and rubber balls must be periodically checked for weight, and should be discarded when the weight is not within the specified tolerance.

F. REPORTING OF RESULTS

Report the amount of abrasion loss in grams of material abraded. This amount shall be an average of the results from the three test specimens. Either Method A or Method B shall be designated as the method used for the evaluation.

REFERENCES
California Test 304 and 308
End of Text (3 pgs) on Calif. 360

ClibPDF - www.fastio.com

the following procedure for each specimen:

a. Multiply the weight obtained in Step 13 by .95, and place this amount of mix in mold as outlined in Steps 1 through 8.
b. Place a 4" cardboard disc on top of the spaded mix and remove mold and mold holder from the spader.
c. Place preheated follower on top of the spaded mix and place mix and assembly in the press for static loading.
d. Press or compact the mix to a height of 2.0" ± .05".
e. Let the compacted specimen remain at room temperature for a minimum of 1 hour prior to start of soaking.
f. Pour 500 mls. of water on specimen in mold (both setting in pan) and allow to stand undisturbed at room temperature for 20 hrs ± 1 hour.

D. TEST PROCEDURES

Method A (Rubber Balls)

1. After 20 hours of soaking, pour the water in the pan, if any, back into the mold containing the specimen, and place mold with sample and pan into a 100°F oven for 5 hours. Surface of specimen must be kept covered with water during this heating period.
2. Take mold containing specimen from oven, pour off and save water, then remove specimen from mold.
3. Place specimen in abrasion mold.
4. Pour 250 mls. of heated water (water removed in Step 2) onto the surface of specimen.
5. Place four clean rubber balls into the mold.
6. Use wing nuts to lock mold into place on mechanical shaker.
7. Shake sample at 1200 ± 10 cycles per minute for 15 minutes, then remove from mechanical shaker.
8. Remove rubber balls and pour contents from mold into a tared container. Use a wash bottle to wash all fines from the surface of the sample into the container.
9. Let the container stand for one hour, then decant off as much of the clear water as possible.
10. Place the container in a drying oven (230°F) and dry to a constant weight.
11. Weigh the container with abraded material. Subtract container tare weight and record the difference as grams of abrasion loss.
12. Repeat Steps 1 through 11 for the other two specimens of the triplicate specimens (See Step 15 of B). Then average results of the three tests.

Method B (Steel Balls)

(Primarily used for evaluating abrasion caused by chain wear)

1. After 20 hours of soaking, pour the water in the pan if any, back into the mold containing the specimen, and place mold with sample and pan into refrigerator maintained at 40°F for five hours.
2. Take mold containing specimen from refrigerator, pour off and save water, then remove specimen from mold.
3. Place specimen in abrasion mold.
4. Pour 250 mls. of cool water (water removed in Step 2) onto the surface of specimen.
5. Place eight clean steel balls into the mold.
6. Use wing nuts to lock mold into place on mechanical shaker.
7. Shake sample at 1200 ± 10 cycles per minute for 15 minutes, then remove from mechanical shaker.
8. Remove steel balls and pour contents from mold into a tared container. Use a wash bottle to wash all fines from the surface of the sample into the container.
9. Let the container stand for one hour, then decant off as much of the clear water as possible.
10. Place the container in a drying oven (230°F) and dry to a constant weight.
11. Weigh the container with abraded material. Subtract container tare weight and record the difference as grams of abrasion loss.
12. Repeat Steps 1 through 11 for two more test specimens identical to first. Then average the results from the three specimens.

E. PRECAUTIONS

1. The sample should be transferred from the 100°F oven, or the refrigerator, to the shaking device as quickly as possible.
2. The rubber balls shall be free of asphalt prior to testing. The asphalt shall be cleaned from the rubber balls with a cleaning solvent and allowed to dry for a minimum of 30 minutes prior to additional testing.
3. Both steel and rubber balls must be periodically checked for weight, and should be discarded when the weight is not within the specified tolerance.

F. REPORTING OF RESULTS

Report the amount of abrasion loss in grams of material abraded. This amount shall be an average of the results from the three test specimens. Either Method A or Method B shall be designated as the method used for the evaluation.

REFERENCES
California Test 304 and 308
End of Text (3 pgs) on Calif. 360

ClibPDF - www.fastio.com

13. 4 inch diameter cardboard disk.

14. Drying and preheating oven capable of maintaining temperature up to 325°F ± 5.

C. MIXING AND FABRICATION

Perform the tests for abrasion using steel balls on three asphalt concrete specimens 2 ± 0.1 inches in height that have been mixed with the designated grade and amount of asphalt and then fabricated as follows:

1. Mix the asphalt and aggregate and cure the mix according to California Test 304, Part I.

2. Bring the mix to a temperature of:

   Asphalt concrete with liquid asphalt - 140°F
   Asphalt concrete with paving asphalt - 230°F.

3. Place mold preheated to compaction temperature in mold holder and into position in the mechanical spader. (Hand Spading as described in California Test 304, Part II, may be used in lieu of mechanical spader.) Place a 1/4 inch thick shim under the mold adjacent to the portion of the mold holder that extends up into the mold. Place the 4 inch diameter cardboard disc into the mold on top of the mold holder base.

4. Weigh 1,000 grams of mixture for pilot sample (used to determine quantity for abrasion specimen).

5. Separate the coarse and fine material by screening the mix through a 1/2 inch sieve onto a flat metal scoop.

6. Arrange the separated material into two parallel rows across the width of the scoop.

7. Introduce the mix onto the feeder belt of the mechanical spader, exercising care so as not to disturb the size arrangement effected on the metal scoop.

8. Start the mechanical spader and operate until all the material has been introduced into the compaction mold.

9. Place mold holder containing the mix and mold back into the proper oven (See Step 2) for 15 minutes.

10. Remove from the oven the mold holder containing the mix and mold and place into position in the mechanical compactor.

ClibPDF - www.fastio.com

11. Compact the mix in the kneading compactor as specified in California Test 304, Part II, but at 350 psi foot pressure and 100 tamps.

12. After compaction, remove mold and specimen and place on platen of press.

13. Apply a static leveling-off load of 12,600 lb. (1,000 psi) with the press at a platen speed of 0.25 inches per minute. Release load immediately.

14. Measure and record the height of the test specimen to the nearest 0.01 inch, then calculate the amount of material necessary to provide a specimen with a height of 2.0 inches.

15. Eject from mold, allow test specimen to cool to room temperature, and determine Sp.Gr. (Using California Test 308, Method C.)

16. Prepare triplicate specimens for testing. Use the following procedure for each specimen:

    a. Compact the mix to a height of 2.0 ± 0.05 inches at 350 psi foot pressure and 100 tamps.

    b. Let the compacted specimen remain at room temperature (77 ± 2 °F) for a minimum of one hour prior to start of soaking.

    c. Pour 500 mls. of water on specimen in mold (both setting in pan) and allow to stand undisturbed at room temperature (77 ± 2 °F) for 16 hours ±1 hour.

D. TEST PROCEDURE

1. After 16 hours of soaking, take mold containing specimen, pour off and save water, then remove specimen from mold.

2. With abrasion mold inverted, place the rubber ring against the built-in shoulder.

3. Place the specimen in the mold against the rubber ring and so that the bottom of the specimen will be abraded.

4. Screw base onto bottom of mold.

5. Pour 250 mls. of water (water removed in Step 2) onto the surface of specimen.

ClibPDF - www.fastio.com

6. Place eight clean steel balls into the mold.

7. Use wing nuts to lock mold into place on mechanical shaker.

8. Shake sample at 1200 ± 10 cycles per minute for 15 minutes ± 5 seconds, then remove from mechanical shaker.

9. Remove steel balls and pour contents from mold into a tared container. Use a wash bottle to wash all fines from the abraded surface of the sample into the container.

10. Let the container stand for one hour, then decant off as much of the clear water as possible.

11. Place the container in a drying oven (230°F) and dry to a constant weight.

12. Weigh the container with abraded material. Subtract container tare weight and record the difference as grams of abrasion loss.

13. Repeat steps 1 through 10 for remaining two test specimens. Then average the results from the three specimens.

E. PRECAUTIONS

The steel balls must be periodically checked for weight, and should be discarded when the weight is not within the specified tolerance.

F. REPORTING OF RESULTS

Report the amount of abrasion loss in grams per square inch of material abraded. This amount should be an average of the results from the three test specimens.

$$\text{Reported Loss} = \frac{\text{L Grams}}{\text{8.17 Square Inches}}$$

L = Average Total Abrasion Loss in Grams (value from Section D-13).

REFERENCES
California Test 304 and 308
End of Test (3 pages) on Calif. 360

ClibPDF - www.fastio.com

APPENDIX B

Surface Abrasion Machine Calibrator (SAMC)

ClibPDF - www.fastio.com

SURFACE ABRASION MACHINE CALIBRATOR

Purpose

The Surface Abrasion Machine Calibrator (SAMC) is used to count the cycles per minute of an asphalt concrete surface abrasion testing machine over a fixed time of either 30 or 60 seconds.

Description/Operation

The SAMC is a self-contained unit in a metal case as shown in Figure B-1. The electronics and counter are housed in the case and storage space is provided in it to store the sensor and the DC power supply.

The sensor is an infrared sensor which counts the repetitious movements (which is indicated on a counter) of a reflective or shiny spot on a surface of the testing unit. The sensor is simply clamped to any fixed stand and pointed at the shiny spot. The distance between the spot and the sensor should be 1/4 ± 1/8 inch. The SAMC counts for fixed intervals of 30 seconds or 60 seconds which can be selected by a toggle switch. A value is then read directly from the counter.

The counter is a liquid crystal Veeder-Root model 799806-212 counter. It is powered by a self-contained power source (cell) which keeps the digital readout "on" at all times. It cannot be switched off. The power source is expected to last for ten years.

The electronics in the SAMC is powered by AC by simply plugging it into any 115 volt receptacle.

To start the counting, select either the 30 or 60 second interval and push the start button. The counting will automatically stop at 30 or 60 seconds, when the time is up. To count again push the reset button to clear the readout and repeat the above procedure. The counter is accurate to ± 1 count.

ClibPDF - www.fastio.com

Malfunction

The SAMC has no knobs or adjustments to alter its operation. Any device suspected of malfunctioning should be returned to the Division of New Technology, Materials and Research for evaluation or repairs.

ClibPDF - www.fastio.com

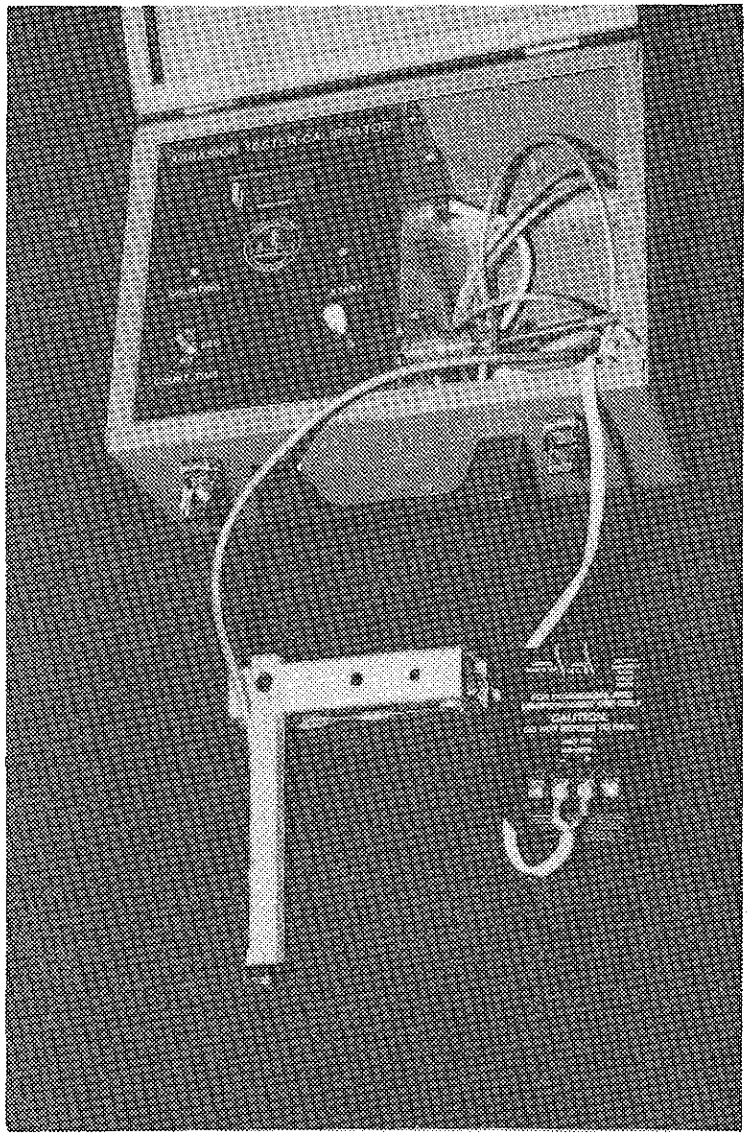

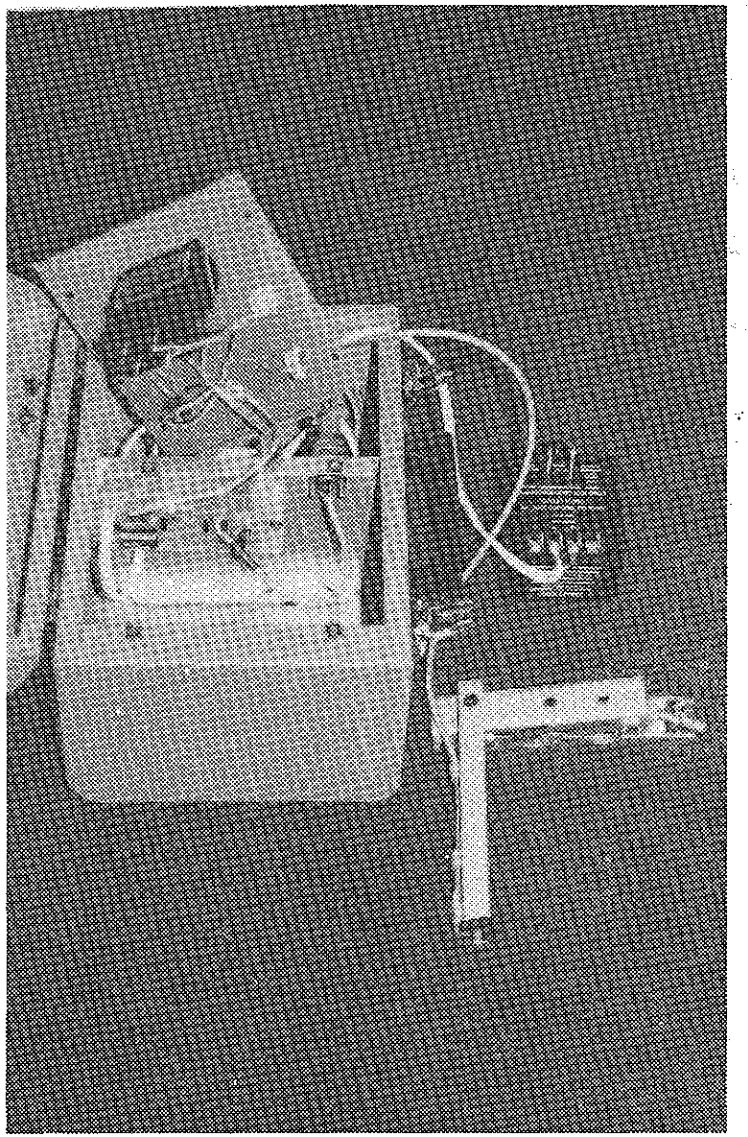

FIGURE B-1
SURFACE ABRASION MACHINE CALIBRATOR (SAMC)

ClibPDF - www.fastio.com

APPENDIX C
Surface Abrasion Mold Specifications and Drawings

ClibPDF - www.fastio.com

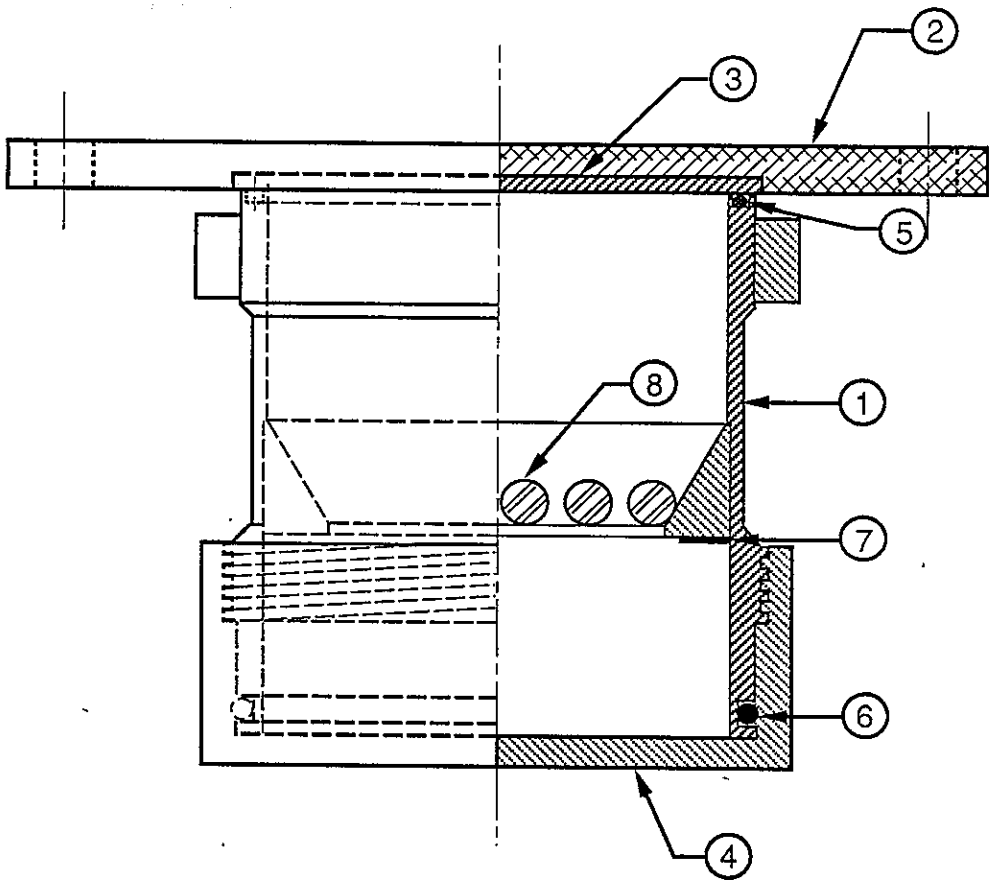

NOT TO SCALE

ASSEMBLY SECTION

LIST OF MATERIAL

No. REQ.	PART No.	DESCRIPTION	MATERIAL
1	1	BODY	NICKEL PLATED STEEL
1	2	COVER	ALUMINUM
1	3	WEAR PLATE	NEOPRENE 60 ±5 SHORE DUROMETER HARDNESS 4.5" DIA. 0.125" THICK
1	4	BASE	NICKEL PLATED STEEL
1	5	"O" RING	NEOPRENE 4.095" ID x 4.345" OD x 1/8" DIA. (FABRICATED)
1	6	"O" RING	NEOPRENE 4 1/8" ID x 4 1/2" OD x 3/16" DIA.
1	7	GASKET	NEOPRENE 60 ±5 SHORE DUROMETER HARDNESS
8	8	BALL BEARINGS	STEEL 13/32" DIA. x 4.5 GRAMS WEIGHT

ClibPDF - www.fastio.com

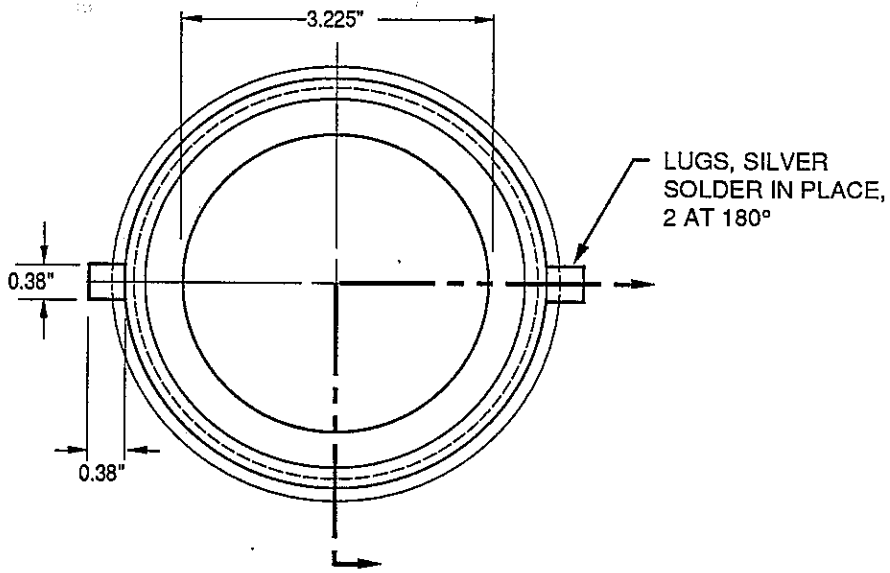

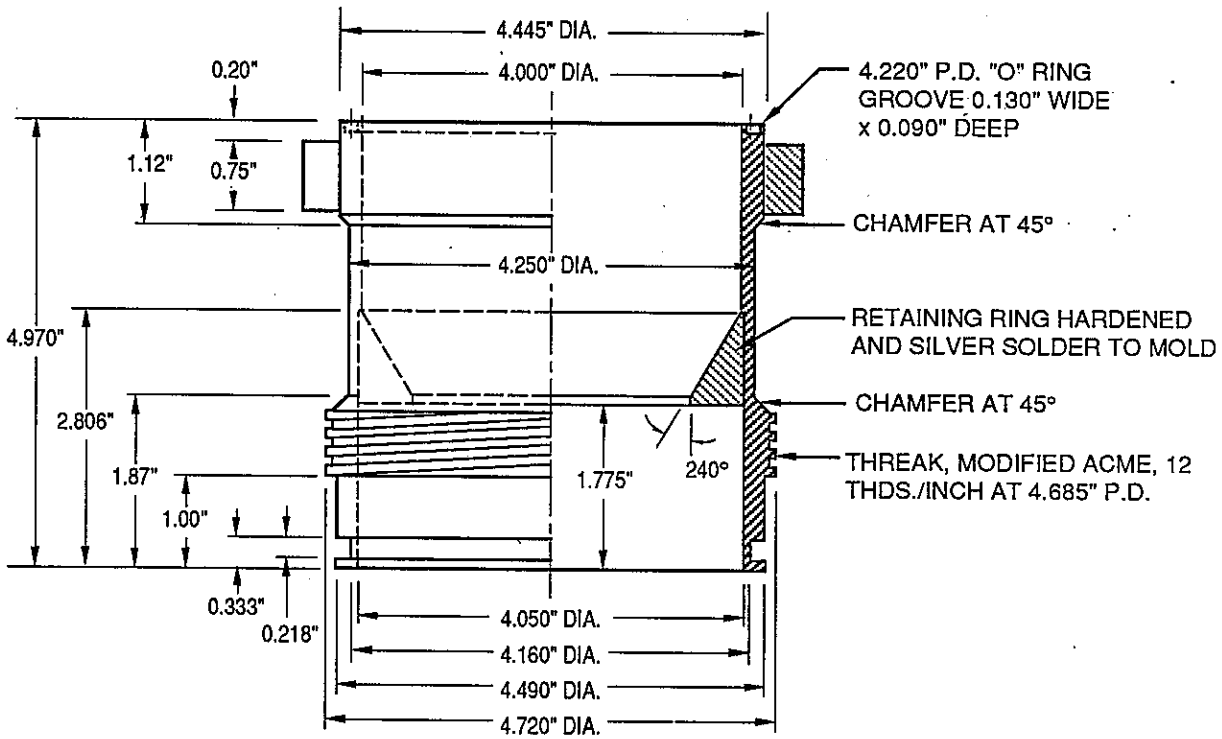

BODY

ClibPDF - www.fastio.com

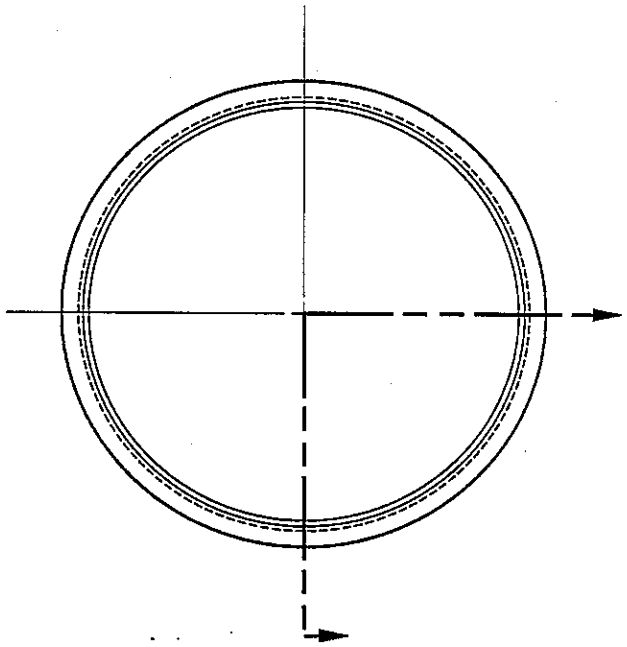

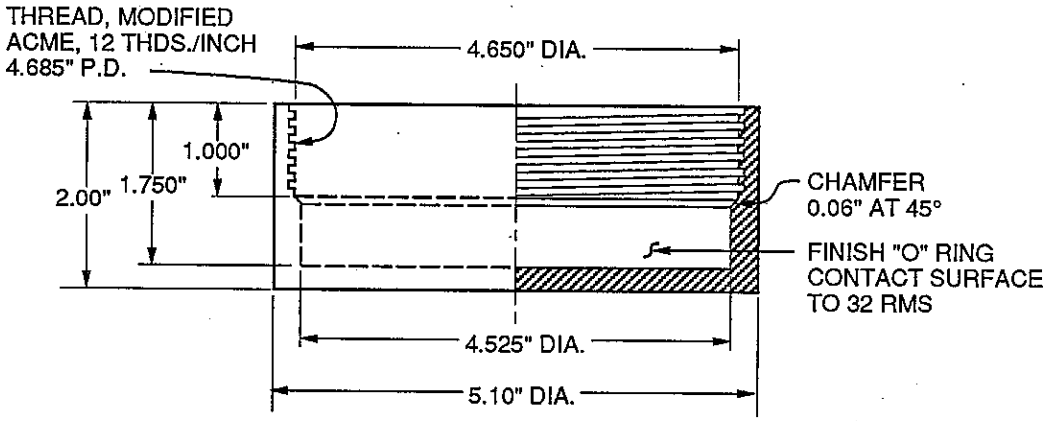

BASE

ClibPDF - www.fastio.com

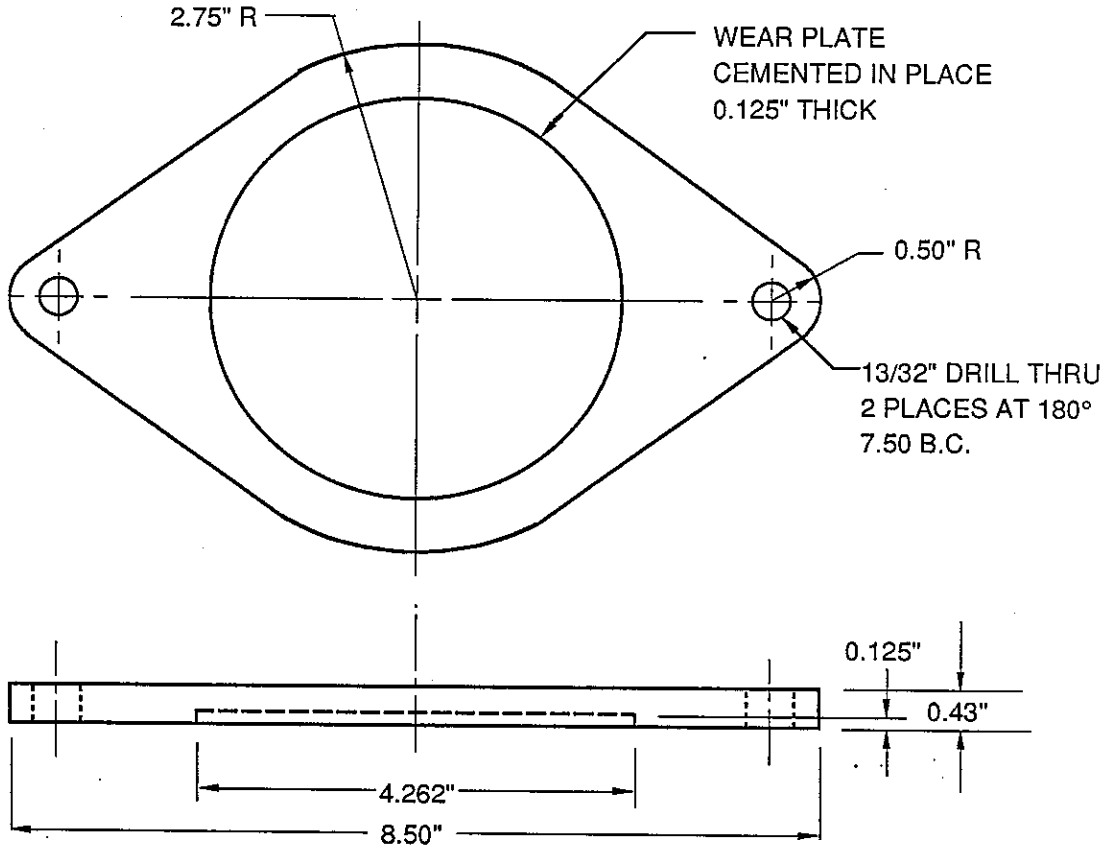

COVER

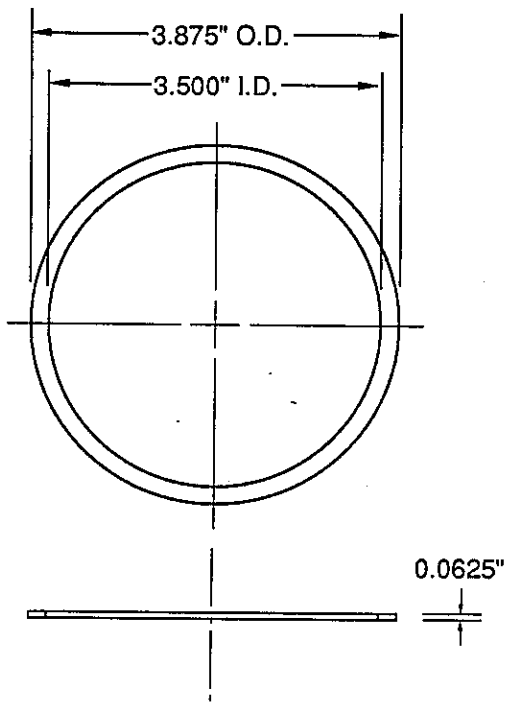

GASKET

ClibPDF - www.fastio.com

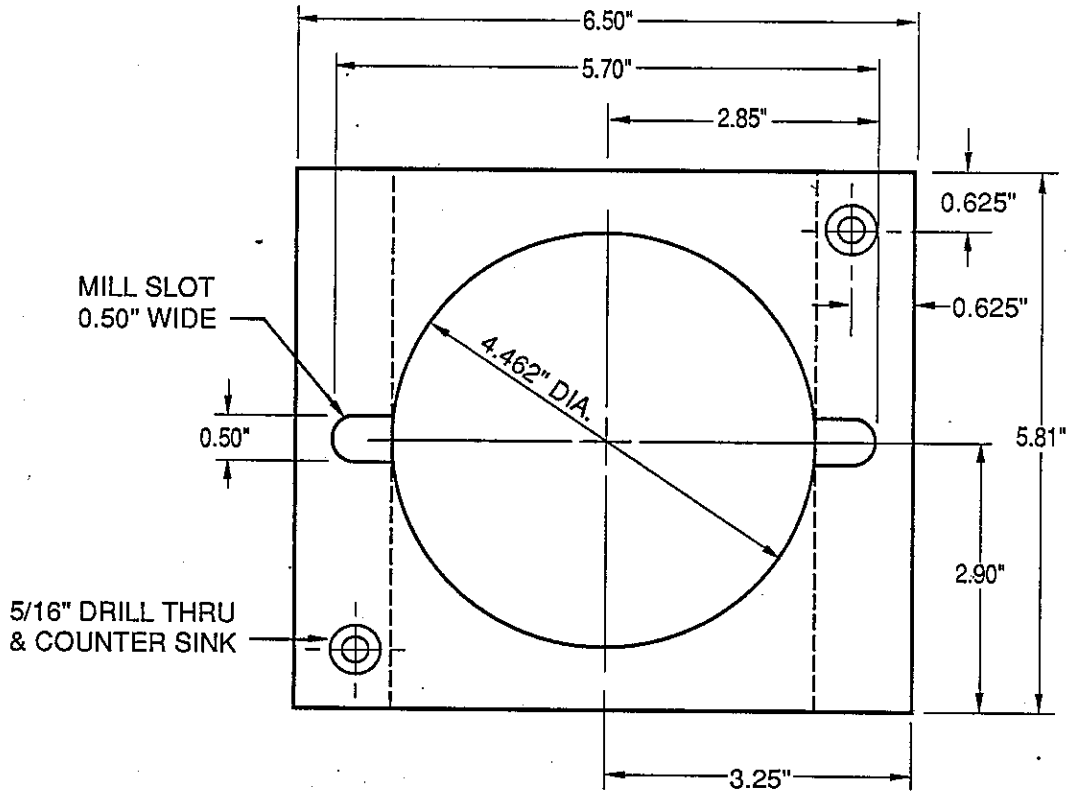

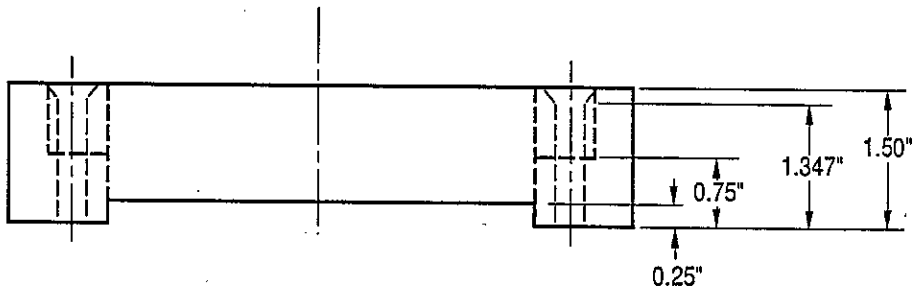

BASE ADJUSTMENT BLOCK

ClibPDF - www.fastio.com

ClibPDF - www.fastio.com