HIGHWAY RESEARCH REPORT

SLOTTED CORRUGATED METAL PIPE DRAINS

71-04

STATE OF CALIF

BUSINESS AND TRANSPORTATION AGENCY

DEPARTMENT OF PUBLIC WORKS

DIVISION OF HIGHWAYS

MATERIALS AND RESEARCH DEPARTMENT

RESEARCH REPORT

NO. M & R 636453

Prepared in Cooperation with the U.S. Department of Transportation, Federal Highway Administration August 1971

ClibPDF - www.fastio.com

August 1971
Final Report
636453

Mr. J. A. Legarra
State Highway Engineer

Dear Sir:

Submitted herewith is a research report titled:

SLOTTED CORRUGATED METAL PIPE DRAINS

Principal Investigator
Eric F. Nordlin

Co-Principal Investigator
J. R. Stoker

Assisted By
B. G. Page

Very truly yours,

JOHN L. BEATON
Materials and Research Engineer

ClibPDF - www.fastio.com

ABSTRACT

REFERENCE: Nordlin, E. F., Stoker, J. R., and Page, B. G., "Slotted Corrugated Metal Pipe Drains", State of California, Department of Public Works, Division of Highways, Materials and Research Department Research Report 636453, August 1971.

ABSTRACT: The application of a slotted pipe drain in some areas subject to occasional wheel loads is beneficial to effective drainage design. The ability of the slotted pipe to carry legal wheel loads is investigated in this project. Also, the development and performance of slotted corrugated metal pipe drains as used on California highways are discussed. Both 14 gage and 16 gage corrugated metal pipe, 18 inches in diameter, were investigated. Based upon pipe deflection data under heavy wheel loads, the slotted drain pipe fabricated to standards specified in California Standard Plans, January 1971, is capable of carrying occasional legal highway wheel loads. However, a series of fatigue endurance tests should be performed on slotted pipe drains if frequent repetitive loads are anticipated.

KEY WORDS: Corrugated metal pipe, drains, pipes, drainage, inlets, wheel loading, deflection test.

ClibPDF - www.fastio.com

ACKNOWLEDGEMENTS

The researchers are appreciative of the assistance and cooperation of district personnel on this project, particularly Mr. Tarbell Martin, Design, Mr. Hank Kreft, Construction, and Mr. T. D. Wells, Maintenance Superintendent, District 11, and Mr. Harvey Hopkins, Construction, District 07.

A special thanks goes to Mr. C. M. Simpson of the Materials and Research Department for his efforts in compiling and presenting the data for this project.

Slotted drain pipe incorporating special alternate designs for this project were furnished by the Metal Products Division of Armco Steel Corporation. Their cooperation in this effort is also gratefully acknowledged.

This work was accomplished with the cooperation of the U. S. Department of Transportation, Federal Highway Administration, as Item D-4-79 of the HPR program. The opinions, findings, and conclusions expressed in this publication are those of the authors and not necessarily those of the Federal Highway Administration.

ClibPDF - www.fastio.com

TABLE OF CONTENTS

	Page
INTRODUCTION	1
CONCLUSIONS	3
RECOMMENDATIONS	4
DISCUSSION	5
ANALYSIS OF RESULTS	18
REFERENCE	24
APPENDIX	25

ClibPDF - www.fastio.com

INTRODUCTION

The early collection and dissipation of all surface water on the traveled roadway is a requirement that faces all designers and hydraulic engineers. One method of intercepting surface water without the need for any form of a surface projecting inlet structure is the slotted corrugated metal pipe drain. This drain consists of 12, 18 or 24 inch diameter corrugated metal pipe with a continuous 1-5/8 inch wide longitudinal drain slot. Continuity of the pipe is provided by design as shown on Standard Plan Drawing D98-4, Drawing No. 1 in the Appendix.

Early installations of the slotted drain pipe were in the median where the median barriers generally precluded any wheel load applications and, therefore, after the paving operation few, if any, vehicle traffic induced stresses were applied to the pipe. The hydraulic potential of this type drain is such that placement in shoulder or ramp areas is often desirable where cost is not excessive. Since trucks occasionally park or stop in the shoulder areas, it is necessary to accommodate occasional heavy wheel loads in the slotted drain pipe design for such locations. Some examples of designs that may be replaced by slotted pipe drains are shown in Figure 1.

This research project was initiated to review the development and performance of slotted CMP drains and to perform full scale load tests to determine the feasibility of using these drains in occasional traffic bearing areas.

ClibPDF - www.fastio.com

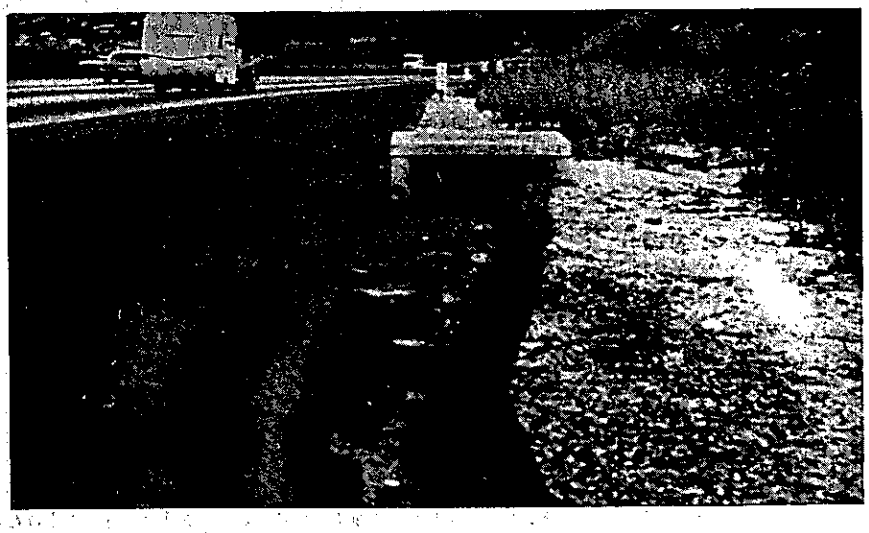

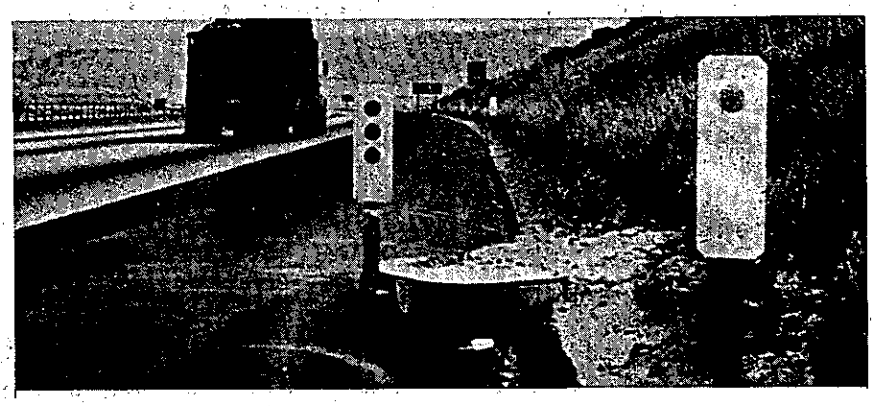

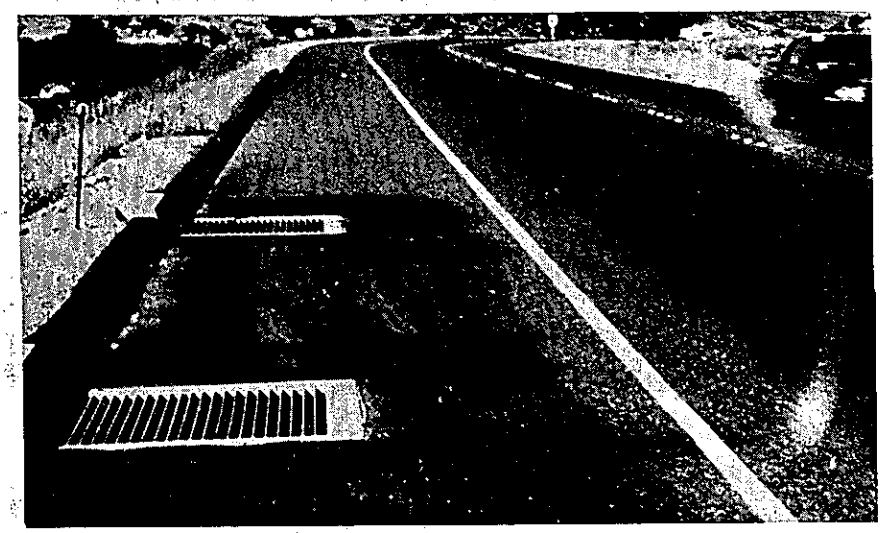

EXISTING DRAINAGE INLETS

Slotted drain pipe would improve the system.

FIGURE 1

ClibPDF - www.fastio.com

CONCLUSIONS

1. The current slotted drain pipe design is capable of withstanding occasional wheel loads with the longitudinal grate bar flush with the A.C. surface as shown in Drawing No. 3 in the Appendix. Therefore, the additional strength obtained from the alternate designs installed as part of this project could not be determined.

2. The slotted drain pipe intercepts surface sheet flow thereby precluding a ponding effect which tends to reduce clogging by runoff carried debris, especially redwood bark.

3. Backfill conditions or compactive effort influence the pipe deflections.

4. In areas that appear to be well compacted, the 16 gage pipe resists loads as well as the 14 gage pipe.

5. A modification to the angle slot type design was found necessary to prevent pipe closure at the slot.

6. The slotted drain pipe designs that are shown in the California Standard Plans dated January 1971 (D98-4) and the revised SD98-5 dated April 21, 1971 (see Drawing Nos. 1 and 2 in the Appendix) should not be used in areas subject to motorcycle or bicycle traffic. In such locations the details shown in Drawing No. 3 in the Appendix would be preferable.

ClibPDF - www.fastio.com

RECOMMENDATIONS

1. When slotted drains are used in an area subject to two wheel vehicular traffic (motorcycles and bicycles), the use of the grate slot type with bar spacers at top and bottom installed flush with the surface is recommended. This type is also considered easier to maintain. See Drawing No. 3 in Appendix.

2. Compaction effort around slotted drain pipe should be given special attention in vehicle traffic bearing areas.

3. It is recommended that slotted drain pipe be considered whenever the "sheet flow" interception of surface water will facilitate and promote traffic safety and where such an installation is economically feasible.

4. If numerous repetitive vehicle wheel loads are proposed for slotted drain pipe installations, further investigation on the fatigue life of the welded or bolted connections, and possibly the pipe itself, should be conducted.

ClibPDF - www.fastio.com

DISCUSSION

This project consisted of two parts. The first part involved the observation of in-place installations and the discussion of existing designs, construction procedures and problems, hydraulic performance, and maintenance with involved personnel. The installations observed were 18 inch diameter corrugated metal pipe in median areas. Generally these drains would not be subjected to wheel loads.

The most significant observations regarding design-fabrication-construction procedures were of an installation near Post Mile 13.5 on Route 60 in Los Angeles. This angle slot type slotted drain (similar to that shown in Drawing No. 1 of the Appendix) sustained approximately 15,000 vehicle loadings during a landslide repair detour operation. Few, if any, of these vehicles were trucks, however. Traffic related distress was not observed but an undesirable feature was found to exist at intermittent locations throughout the project. Slippage occurred between the angle and the flashing as shown in Figures 2 and 3. The slot width reduced to approximately 1 inch at several locations and

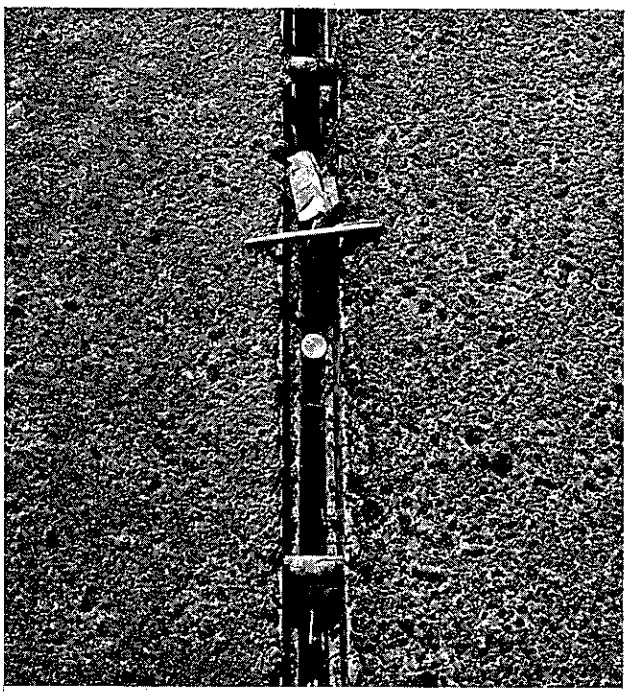

PIPE CLOSURE ON ANGLE SLOT TYPE SLOTTED DRAIN

FIGURE 2

ClibPDF - www.fastio.com

ANGLE SLOT DETAIL

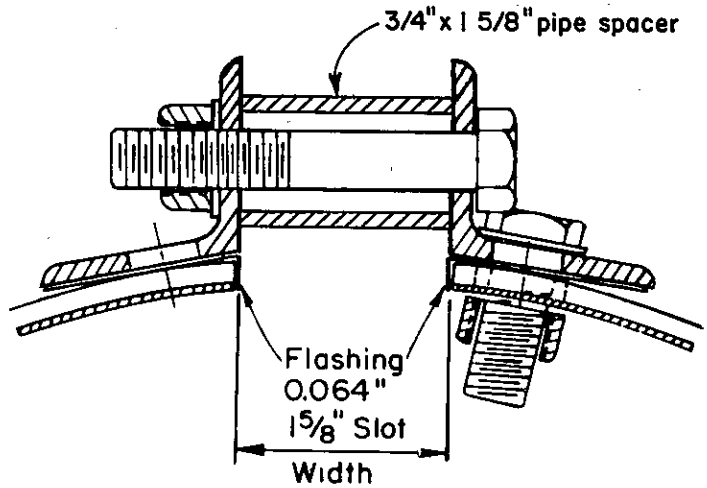

INITIAL DESIGN

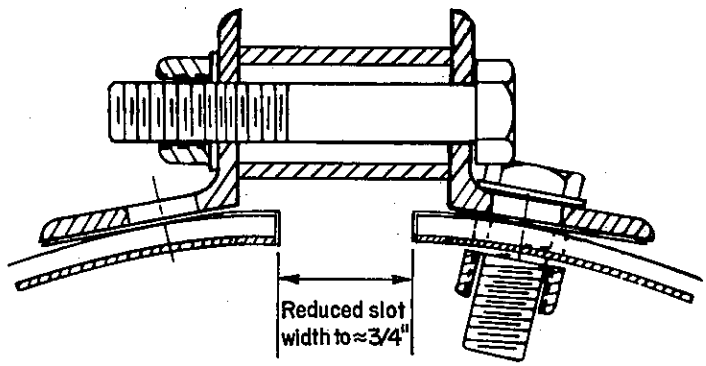

OBSERVED DISTORTION

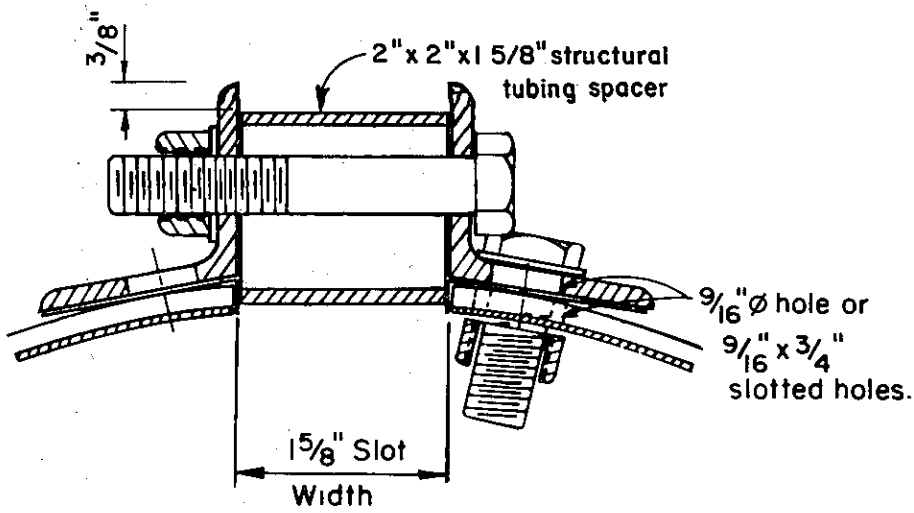

REVISED DESIGN

Figure 3

ClibPDF - www.fastio.com

in some places a quarter could be rested on the resulting ledge. This narrow opening reduces efficiency and establishes an undesirable hydraulic loss at the inlet. Also, the resulting shelf catches rocks and debris which will eventually clog the drain if not maintained periodically. To prevent this pipe slot closure, a recent design revision relocates the structural tubing spacer 3/8 inch lower so that it will restrain the pipe and flashing. This revised detail is shown in Figure 3 and in Drawing No. 2 of the Appendix (SD98-5 dated April 21, 1971).

A very practical slotted drain pipe installation that intercepts runoff to an interchange ramp is shown in Figure 4. The AC surfacing adjacent to the drain inlet was observed to have several tire marks indicating that vehicles had crossed without any apparent distress to the pipe or the surfacing. It appears that most of these marks were made by passenger vehicles.

Figure 5 partially exhibits the twisting that occurred with an installation of slotted drain pipe utilizing the earlier flange slot type design. This design has been deleted from the Standard Plans because of the construction problems in maintaining alignment and for reasons of economy.

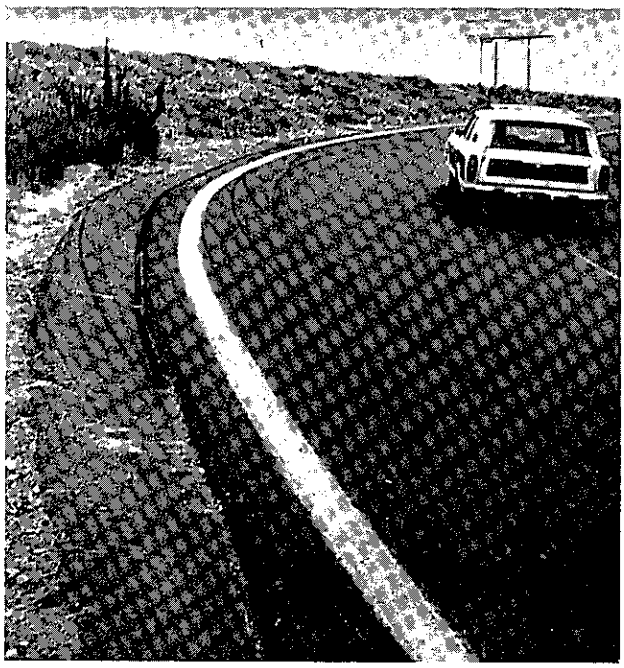

DRAIN INSTALLATION ON AN INTERCHANGE RAMP

FIGURE 4

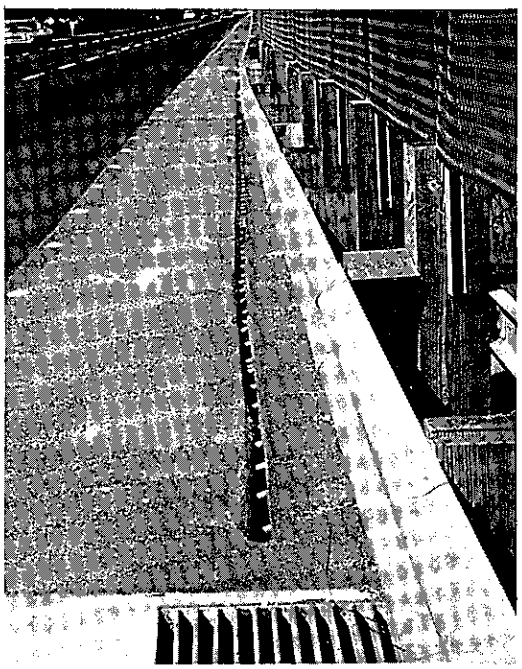

FLANGE SLOT TYPE SLOTTED DRAIN DESIGN

FIGURE 5

Several other applications of the slotted drain pipe that have been observed recently are presented in Figures 6 and 7.

ClibPDF - www.fastio.com

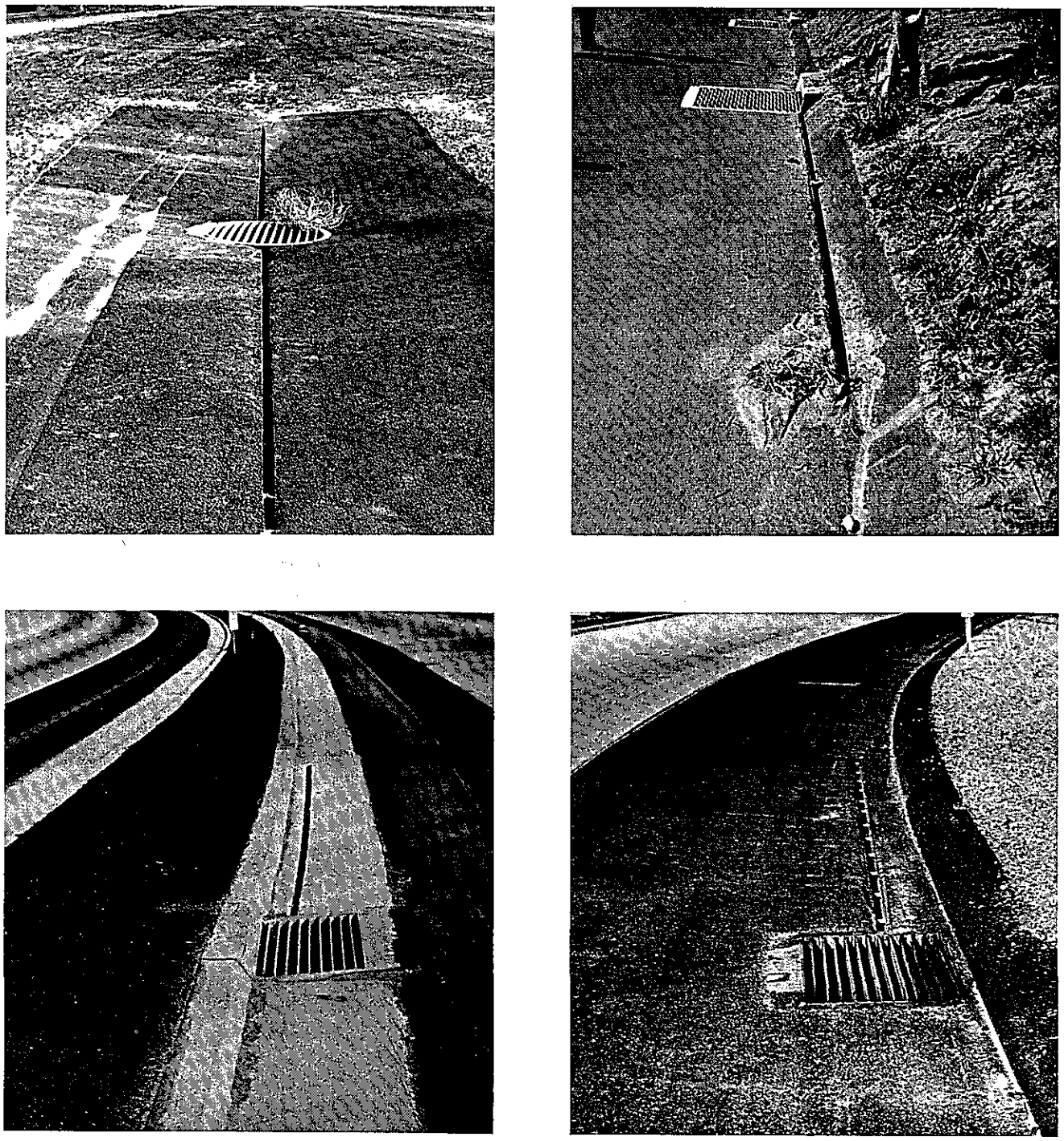

SLOTTED DRAINS SUPPLEMENTING OTHER DRAINAGE INLETS

FIGURE 6

ClibPDF - www.fastio.com

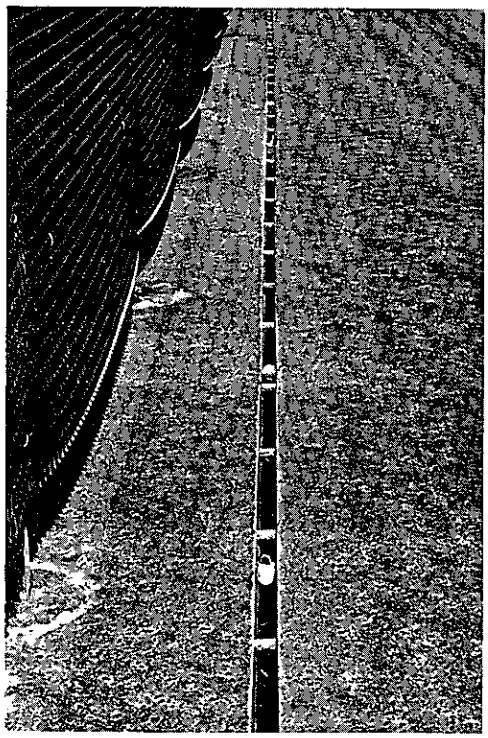

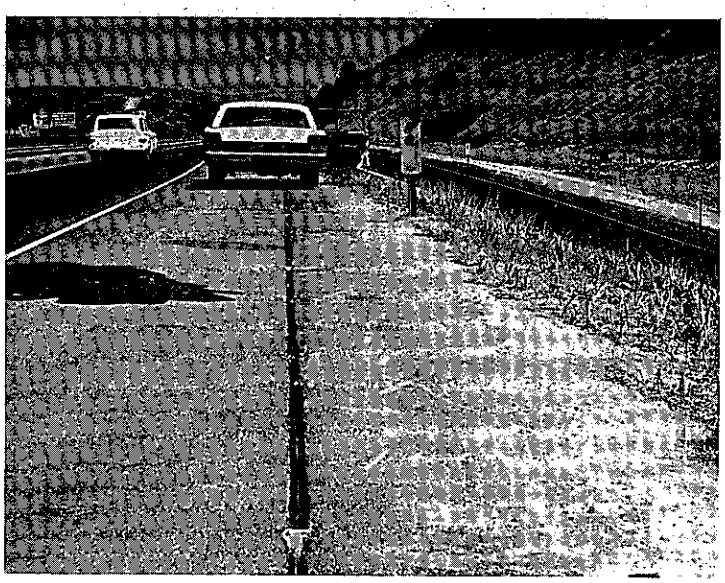

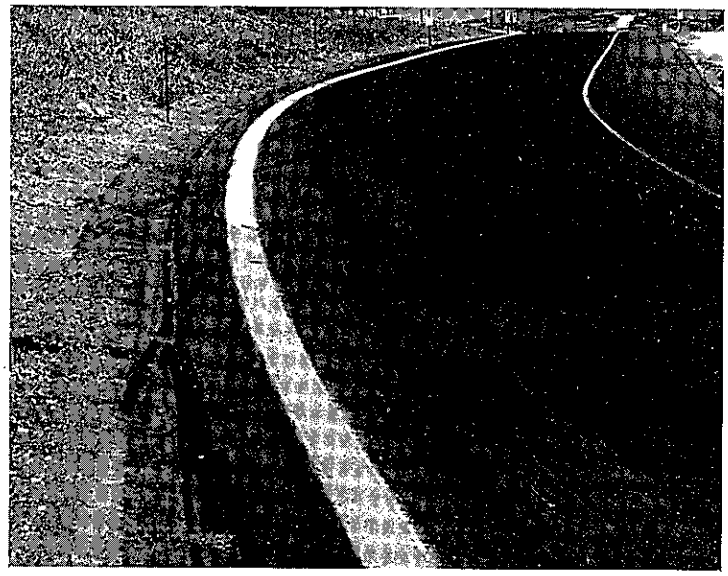

SLOTTED DRAIN WITHOUT DIKES OR CURBS

FIGURE 7

ClibPDF - www.fastio.com

in discussing the merits and shortcomings of the slotted drain pipe with district personnel, it was reported that redwood bark has not clogged the slotted drains in areas where this might have been a problem. It appears that the slotted pipe intercepts the water in such a manner that the bark is not easily transported to the slot. This "sheet flow" interception would also tend to preclude ponding in the collection of storm runoff.

To assist maintenance personnel in cleaning slotted drain pipe grates, consideration has been given to placing the grates flush with the surface rather than 3/4" below the pavement surface as shown in Drawings No. 1 and 2 in the Appendix. Also, this placement would facilitate motorcycle and bicycle traffic. Therefore the drain pipe was installed on a construction project on Route 11-SD-805-3.5/7.3 with the longitudinal bar flush with the AC surface. An alternate design incorporated in the above project provided a second row of cross bar spacers at the surface to accomplish the objectives of this relocation (see Drawing No. 3 in the Appendix).

The second part of this research project involved evaluating the load carrying ability of the most promising designs by comparing the deflection characteristics of the pipe under wheel loads. The first investigation was made using a Benkelman Beam to measure the deflection of an 18" diameter standard grate type slotted drain pipe under a 12.3 kip single axle load as shown in Figure 8. This installation was in the median of a project on Route 07-Ora-55-4.6/17.8. The trench was excavated to grade with a shaped bucket and a sand-cement grout was used for backfill material. This is a typical installation practice when several lengths of slotted pipe are placed.

Deflections were measured at several distances from the slot to determine the critical load location for pipe deflection. As expected, the maximum deflections were measured with the wheel load at or near the pipe slot. The maximum pipe deflection was 0.093 inch.

Considerable difficulty was encountered in positioning the beam-wheel load combination in the vicinity of the slot. Therefore, to perform the remaining investigations, deflection measuring equipment was designed to fit inside the slotted drain pipe. This eliminated the chance of probe damage by the truck tires and, also, provided a greater confidence in the deflection reading by reducing the chance of the probe slipping during the loading. The testing apparatus is shown in Figure 9.

This internal measuring device consists of a linear potentiometer capable of accommodating movements to 1.3 inches. The potentiometer was calibrated with a transducer/strain indicator to provide vertical movements in mils (one thousandth of an inch). The potentiometer was supported from the base by an adjustable leg that accommodated variations in pipe shape or diameter. An initial reference for each set of readings was obtained by an

ClibPDF - www.fastio.com

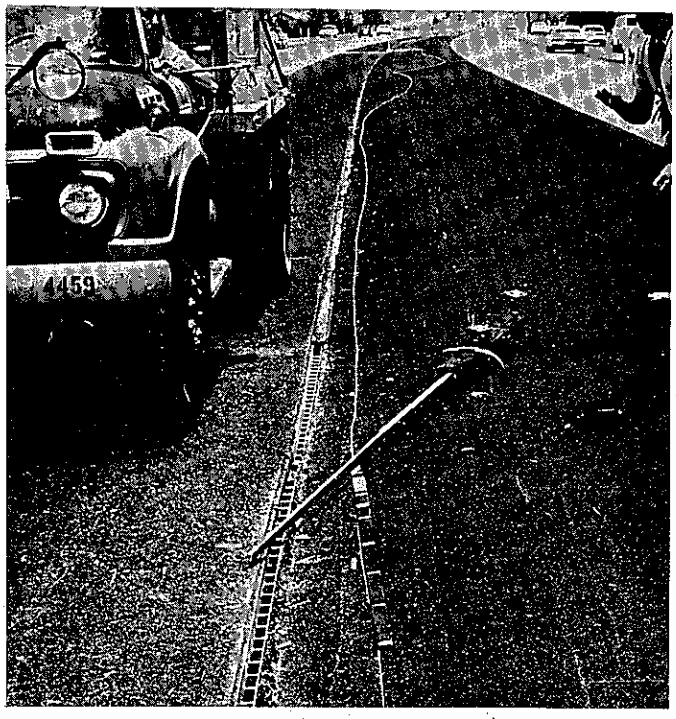

DEFLECTION MEASUREMENTS ON 07-ORA-55
WITH THE BENKELMAN BEAM

FIGURE 8

ClibPDF - www.fastio.com

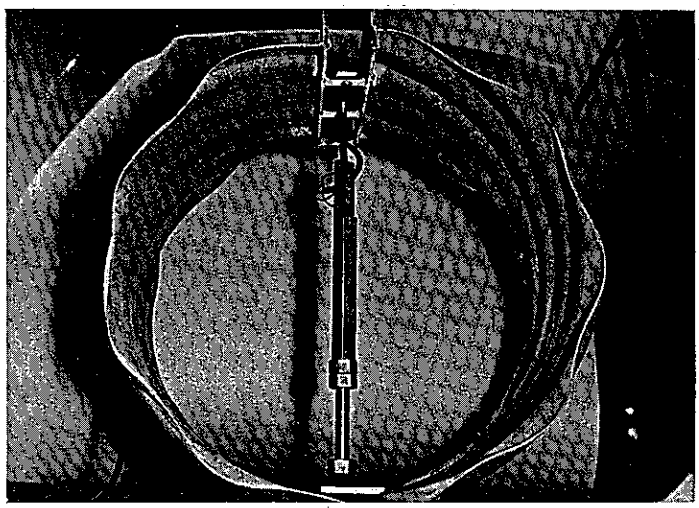

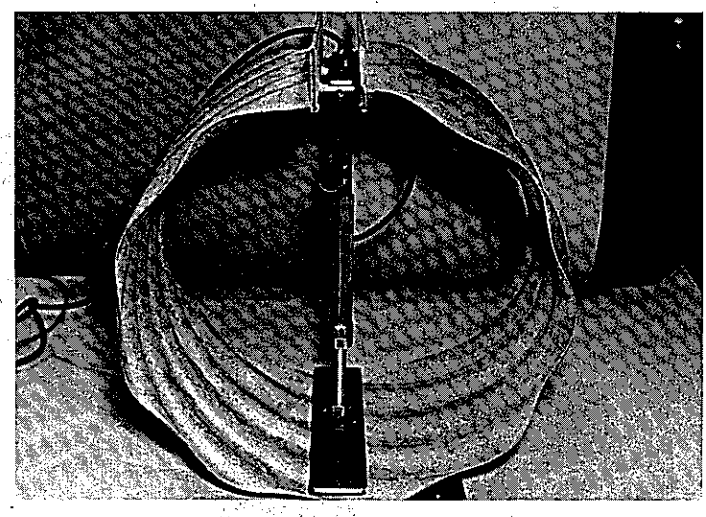

INTERNAL
INSTRUMENTATION
IN PLACE

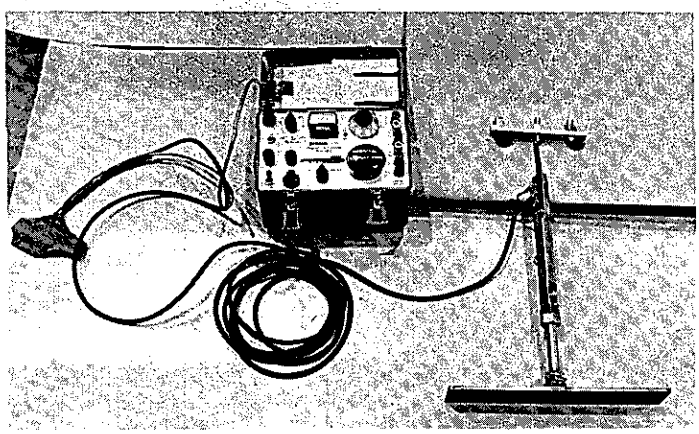

EQUIPMENT INCLUDING
TRANSDUCER/STRAIN
INDICATOR

FIGURE 9

ClibPDF - www.fastio.com

adjustable set screw in the grate clamp assembly. Movements between the grate or pavement surface and the pipe invert were measured.

The second and primary investigation was conducted on a going construction project on Route 11-SD-805-3.5/7.3. Three designs of grate slot pipe were installed at three locations on this project in both 14 gage and 16 gage corrugated metal pipe, 18 inches in diameter. These three grate slot designs are shown in Figure 10. At one of these locations a length of 14 gage 18" diameter unslotted standard CMP was also installed for comparison.

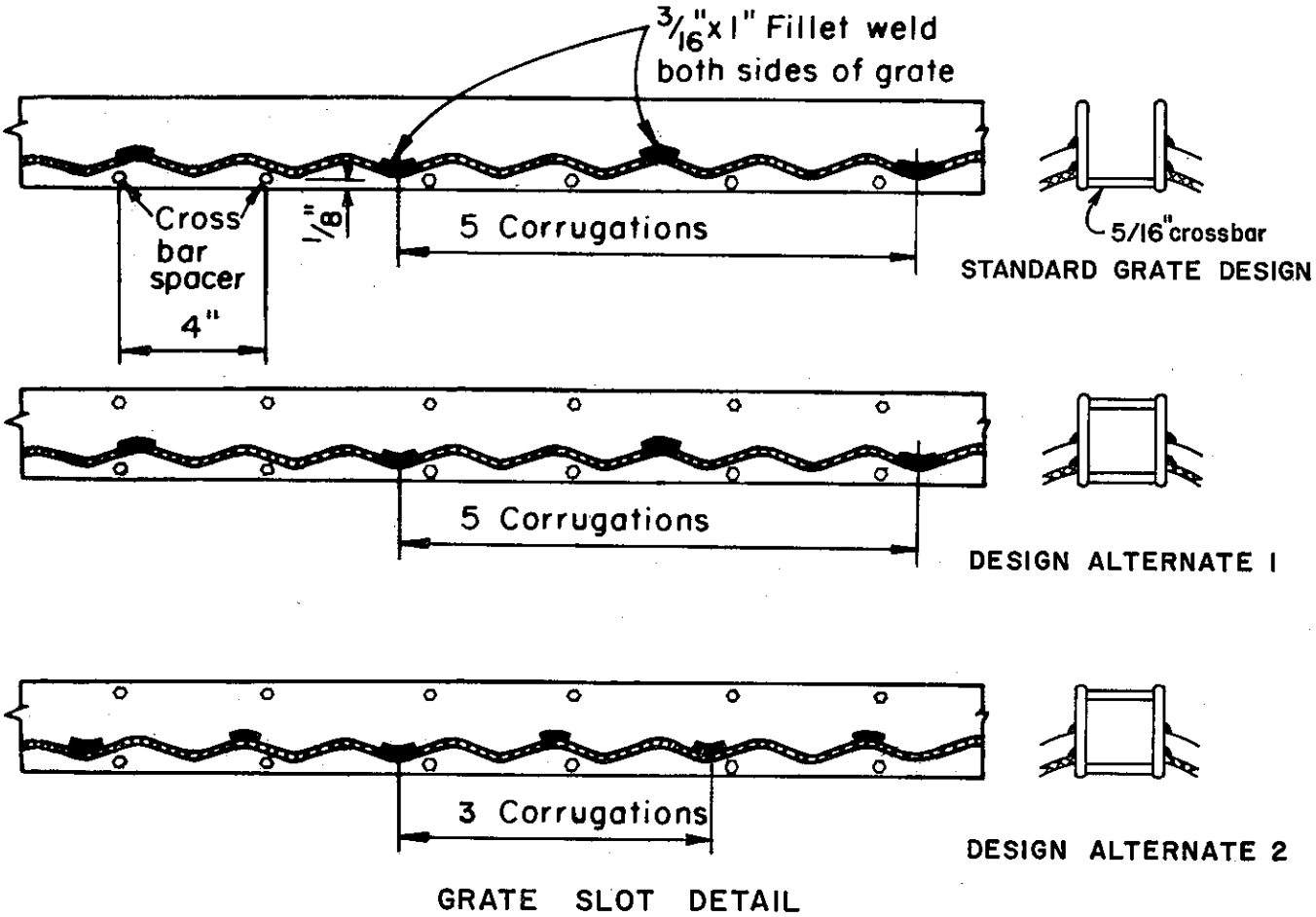

FIGURE 10

ClibPDF - www.fastio.com

An exact evaluation of the structural requirements of the drain was not determined; however, an analytical evaluation of the standard grate slot design indicated that the probable failure mode of the grate slot would be the single row of 5/16 inch cross bar spaces in bending. The second most probable failure mode was determined to be the fillet welds in shear. Therefore, Design Alternate 1 consisted of modifying the standard grate design by adding a second row of cross bar spacers at the top of the longitudinal bar. Design Alternate 1 was further modified resulting in Design Alternate 2 by increasing the number of fillet welds to 5/3 the original number. The alternate designs were expected to accommodate legal wheel loads if the current standard design could not.

Material from the trench excavation was used as pipe backfill on the 11-SD-805-3.5/7.3 project. This material was a sandy embankment soil combined with some Class 4 aggregate subbase and Class 2 aggregate base. Location #1 utilizing Design Alternate 1 was an exception to this as the structural section consisted of 0.50' CTB over the aggregate subbase in the shoulder. The backfill material around the drain pipe was compacted with two Master T-1000 portable compactors as shown in Figure 11. These installations were made with normal construction procedures, inspection, and controls.

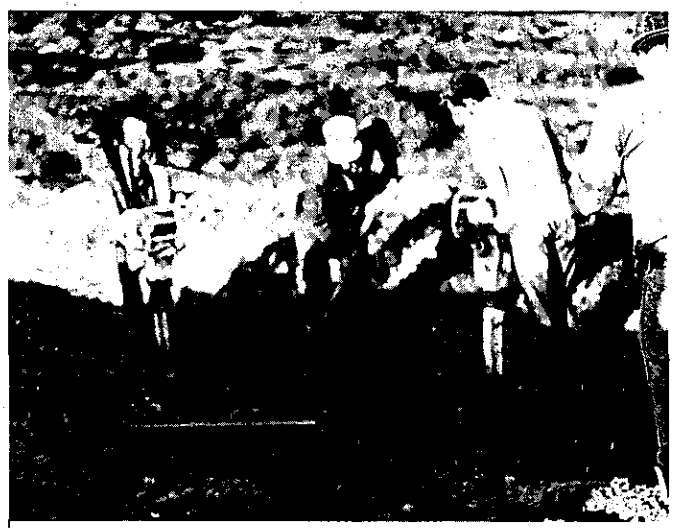

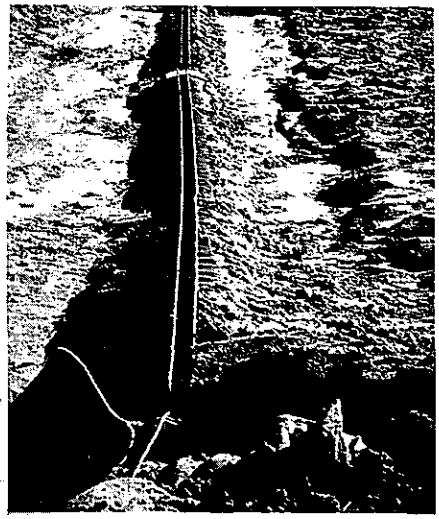

BACKFILL COMPACTION ON SLOTTED DRAIN PIPE FOR
11-SD-805-3.5/7.3

FIGURE 11

ClibPDF - www.fastio.com

The asphalt concrete in the shoulder areas at all three locations on Route 11-SD-805-3.5/7.3 had a 0.25' design thickness and was placed about one week prior to the deflection measurements which were made with the internal pipe deflection measuring instruments as shown in Figure 12.

DEFLECTION MEASUREMENTS ON
11-SD-805
WITH INTERNAL INSTRUMENTATION

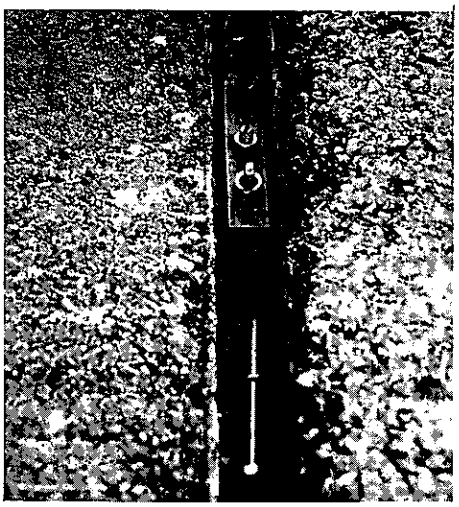

DEFLECTION APPARATUS
IN PLACE

FIGURE 12

The third investigation was made on a construction project on Route 11-SD-805-17.1. This installation utilized a shaped trench and an asphaltic concrete backfill and surfacing material. A picture of the excavation bucket used to shape the trench is shown in Figure 13. This project was not open to traffic at the time of this investigation, but the asphalt concrete surfacing had been placed for several weeks.

FIGURE 13

ClibPDF - www.fastio.com

Deflection of the drain pipe under a wheel load was utilized to evaluate the performance and capability of the tested slot designs and pipe gages to carry applied wheel loads. A distinction should be made between the results measured with the linear potentiometer-strainsert (internal) instrumentation that used the pipe invert for a reference and the results of the Benkelman Beam that uses an adjacent surface area as reference. Because the pipe invert probably deflects under load, it was expected that the Benkelman Beam deflection readings would be slightly higher for a given pipe-wheel load situation. This apparent discrepancy was reduced somewhat because the internal measurements were made with a static load whereas the Benkelman Beam readings are taken with a transient or slow moving load. Deflections under a moving load are generally less than under a longer held static load. Based upon a very few deflection observations on the standard CMP installation, the internal measurements are approximately 70 percent of the Benkelman Beam measurements. However, a valid, reliable comparison cannot be made because of the few deflection values.

The internal pipe deflection measuring device was considered more desirable for this application because it was (1) easier to position, (2) much easier to repeat a reading, (3) not subject to surface slipping, (4) less susceptible to varying surface irregularities, and (5) not subject to damage by the truck tire.

Internal deflection measurements were made on all of the slotted drain pipe installations investigated except for the initial measurements on the project on Route 07-Ora-55. The Benkelman Beam was used for measuring deflections of slotted drain pipe under a 12.3 Kip single axle load on project 07-Ora-55 and also for determining the deflections of shoulders and the deflection of standard corrugated metal pipe on the projects on Route 11-SD-805. Deflection measurements were taken on the Route 11-SD-805 projects with the center of the dual straddled over the slot. These positions are shown pictorially in Figures 14a and 14b.

LOAD ORIENTATIONS AS APPLIED TO THE SLOTTED DRAIN PIPE

(a) Load 10" from center line. (b) Load on center line.

FIGURE 14

ClibPDF - www.fastio.com

Additional tests were made on the Route 11-SD-805 projects at Locations 2 and 3 between P.M. 3.5/7.3 and at Location 4 at P.M. 17.1 with the wheel perpendicular to the slot as shown in Figure 15. This orientation placed all of the applied load directly on the pipe, and therefore resulted in greater pipe deflections. It was assumed that trucks using a flotation* tire would apply a direct load to the pipe in a similar manner.

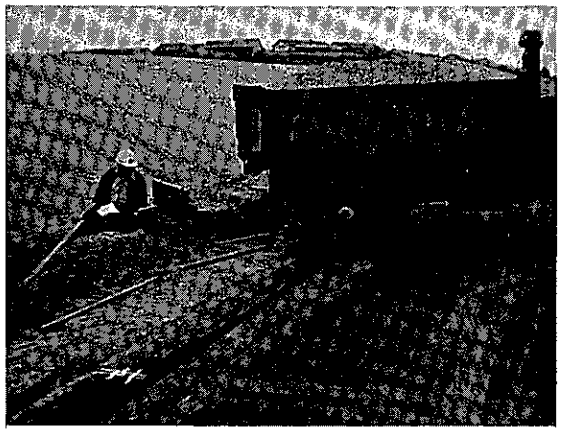

LOAD PERPENDICULAR TO SLOT

FIGURE 15

On the Route 11-SD-805 projects, 14 Kip, 16 Kip, and 21 Kip single axle loads were applied to the slotted pipe, shoulder areas, and a length of corrugated metal pipe extending from the slotted pipe. The resultant measurements are tabulated in Table 1. The negative readings shown in this table indicate that the position of the load and the soil conditions were such that the lateral pressures influenced the pipe distortion more than the vertical pressures. This resulted in a small upward movement of the pipe slot.

The existing cross slope of the pavement shoulder at Location 2 on Route 11-SD-805 was approximately 6% greater than at the other locations, and, therefore, the applied wheel loads are larger here than at the other locations since the lower side wheels were used in the tests. Theoretically (considering this larger slope) the dual wheels used in the test carried 56% of the total axle load. Therefore, the measured deflections shown on Figure 16 are plotted against adjusted axle loads of 15.6 Kip (14 x 0.56 x 2) to provide relative comparisons with other loads at 14 Kip.

While loading the slotted drain installation to obtain deflection values, considerable movement was observed at the upstream terminal end of the slotted pipe. This movement resulted because

* The flotation tire is a very wide tire that is sometimes considered an alternate to the standard dual tires.

ClibPDF - www.fastio.com

the slot in the last six inches of the pipe was not supported by the grate, thus allowing some closure of the slot when the load was applied. A subsequent revision of the metal end cap provides circumferential support to the pipe end which will reduce the stress at the end connections. The revised design is shown in Drawing No. 2 of the Appendix.

The deflection data obtained by this investigation is considered to be typical for slotted drain pipe in shoulder installations. Variations in the measured values are expected to be rather large because of the segregation and variation in the backfill material, the applied compactive effort, the location of the applied load with respect to the measuring instrument, and to a lesser degree variations inherent in the testing equipment and operator skills.

Neither visual observations nor test data indicated any failure of grate components or welds during the testing.

ClibPDF - www.fastio.com

ANALYSIS OF RESULTS

Relatively high deflection values were measured on Route 11-SD-805 at Location 2 between P.M. 3.5/7.3 and Location 4 at P.M. 17.1. When the data from Table 1 for Location 2 is compared to that for Locations 1 and 3, it appears that the soil is more resilient or that a lesser degree of compaction was attained at Location 2. This is shown by the measured pipe deflections and by the Benkelman Beam deflections in the shoulder. The comparatively high permanent set values indicate that a lower relative compaction existed at Location 2.

The comparatively high deflections measured at Location 4 at P.M. 17.1 are attributed to voids resulting from the physical dimensions of the shaped trench, the pipe diameter, and the AC backfill material. The creep rate under load was such that up to three minutes was necessary to obtain a stabilized deflection value. The comparative high deflections suggest that for traffic bearing areas, dense graded asphaltic concrete is not an effective pipe backfill material when used with the shaped trench.

Just as the flotation tire applies more stress to a flexible pavement[1], it will also induce greater stresses in the slot connection and pipe than the dual wheel load. In typical load orientations the dual wheel load applies more of a "balanced" load (lateral and vertical) on the pipe than the single flotation tire that is sometimes used as an alternate. As the pipe deflects under a dual wheel, more of the load will be carried by the portions of the dual wheel not over the pipe. Thus more lateral soil support will be provided to enable the pipe to withstand larger vertical wheel loads. Only a few trucks have been observed to use the flotation tire at this time, and the percentage to the total truck volume is assumed to be very small. Therefore, the typical maximum values imposed on the slotted drain are applied by the dual wheel load at the center line, parallel to the pipe. An occasional maximum value will be imposed by a flotation tire (represented by test data obtained with the dual perpendicular to the slot).

The deflection data in Table 1 indicates that the slotted pipe is capable of toleration deflections up to at least 0.380 inch. It appears that for a well compacted installation, legal loads applied by dual wheels would cause deflections less than 0.100 inch. Also, legal loads applied by flotation tires would cause deflections less than 0.200 inch.

Therefore, it is concluded that the existing slotted drain design is capable of supporting heavy wheel loads that may be occasionally applied in the highway shoulder or interchange ramp areas.

For the purpose of comparing variables, deflection data for the applied wheel loads as shown in Table 1 was proportioned to

ClibPDF - www.fastio.com

deflections for equivalent 14 Kip single axle loads. This proportioning is a direct ratio for the Benkelman Beam deflections measured in the shoulder. The average values are projected from zero in Figure 16 to show the relative shoulder deflection values at Locations 1, 2, and 3 on Route 11-SD-805-3.5/7.3. However, the internal measurement of pipe deflections requires additional considerations for proportioning. Since some "set" usually resulted from a previous load, this was considered when proportioning the pipe deflections. It is believed that pipe deflections will not be linear until a uniform lateral support is provided for the pipe and, therefore, only points are plotted.

The resultant averages are presented in Table 2 and Figure 16. The tabulated average set values in Table 2 are the difference between the average deflection and the average rebound for the listed loading position.

In addition to supporting the observations made from the individual measurements, the average values indicate that very little benefit can be realized from the 14 gage pipe <u>if</u> the bedding and backfill material is not resilient and is well compacted. This is exhibited in Figure 16 at Locations 1 and 3 where the average pipe deflections were very close for 14 and 16 gage pipe. However, unless special attention is applied to the compaction effort, the 14 gage drainage pipe is probably justified in traffic bearing areas.

Because the average deflections of the slotted drain pipe for dual wheel loads (the most prominent type on the highway) do not exceed the average deflections measured in the shoulder area, it appears that the existing designs are adequate in traffic bearing areas. However, if numerous wheel load applications are anticipated for the slotted drain pipe installations, an investigation to determine the traffic fatigue life of the slotted drain pipe and its connections should be conducted. The data measured during this investigation can be used to establish reasonable test limits for such an investigation.

ClibPDF - www.fastio.com

TABLE 1

(Deflection, Mils)

Location	Pipe Gage	Run	Single Axle Load, Kip: Truck Parallel to Pipe, 10" from CL† 14	16	21	At CL† 14	16	21	Truck Perpendicular To Pipe 14	16	21	Permanent Set After Testing With All Loads
11-SD-805-3.5/7.3												
1.	14	1	3	8	10	18	18	31				
	16	1	15	12	15	16	36	47				
	Shoulder*		38	45	56							
2.	14	1	-14	9	8	19	62	90	119	130	101	16
		2	--	--	--	24	55	56	73	114	150	35
	16	1	-12	76	105	87	149	171	183	241	325	112
		2	--	--	--	55	52	101	161	159	237	14
	Standard CMP		--	--	--	95	90	125				
	Shoulder*		65	45	93							
3.	14	1	3	9	24	24	34	11	70	80	97	17
		2	3	-16	-9	28	38	65	104	108	170	9
	16	1	14	38	45	25	42	65	93	102	154	43
		2	24	9	23	30	25	45	90	81	121	2
	Shoulder*		29	33	42							
11-SD-805-17.1												
4.	14	1	17	57	97	63	94	137	182	171	282	57
		2	19	68	112	95	104	167	194	250	380	48
07-Ora-55												
5.	16	1								121**		0**
	Shoulder*		39-74 Avg.			=	56**					

* Measurements were taken several feet from the pipe.

** Values are adjusted to 16 Kip from the applied 12.3 Kip single axle load measured with the Benkelman Beam.

† Location of centerline of dual wheels.

ClibPDF - www.fastio.com

TABLE 2

Average* Deflections, Mils

Location	Equivalent 14 Kip Single Axle Wheel Loads: Parallel Loading Average at CL Pipe — Deflection	Parallel Loading Average at CL Pipe — Set	Perpendicular Loading Average at CL Pipe — Deflection	Perpendicular Loading Average at CL Pipe — Set
11-SD-805-3.5/7.3				
1. 14 gage	18	0	--	--
16 gage	26	0	--	--
Shoulder	38			
2. 14 gage	23	7	77	3
16 gage	56	17	142	6
Shoulder	55			
3. 14 gage	24	6	76	3
16 gage	32	13	76	0
Shoulder	29			
11-SD-805-17.1				
4. 14 gage	97	28	208	64
07-Ora-55				
5. 16 gage	--	--	106**	--

* The 16 Kip and the 21 Kip single axle loads have been proportioned to equivalent 14 Kip axle loads.

** Measured with the Benkelman Beam for 12.3 Kip single axle loads.

ClibPDF - www.fastio.com

LOAD - DEFLECTION RELATIONSHIPS

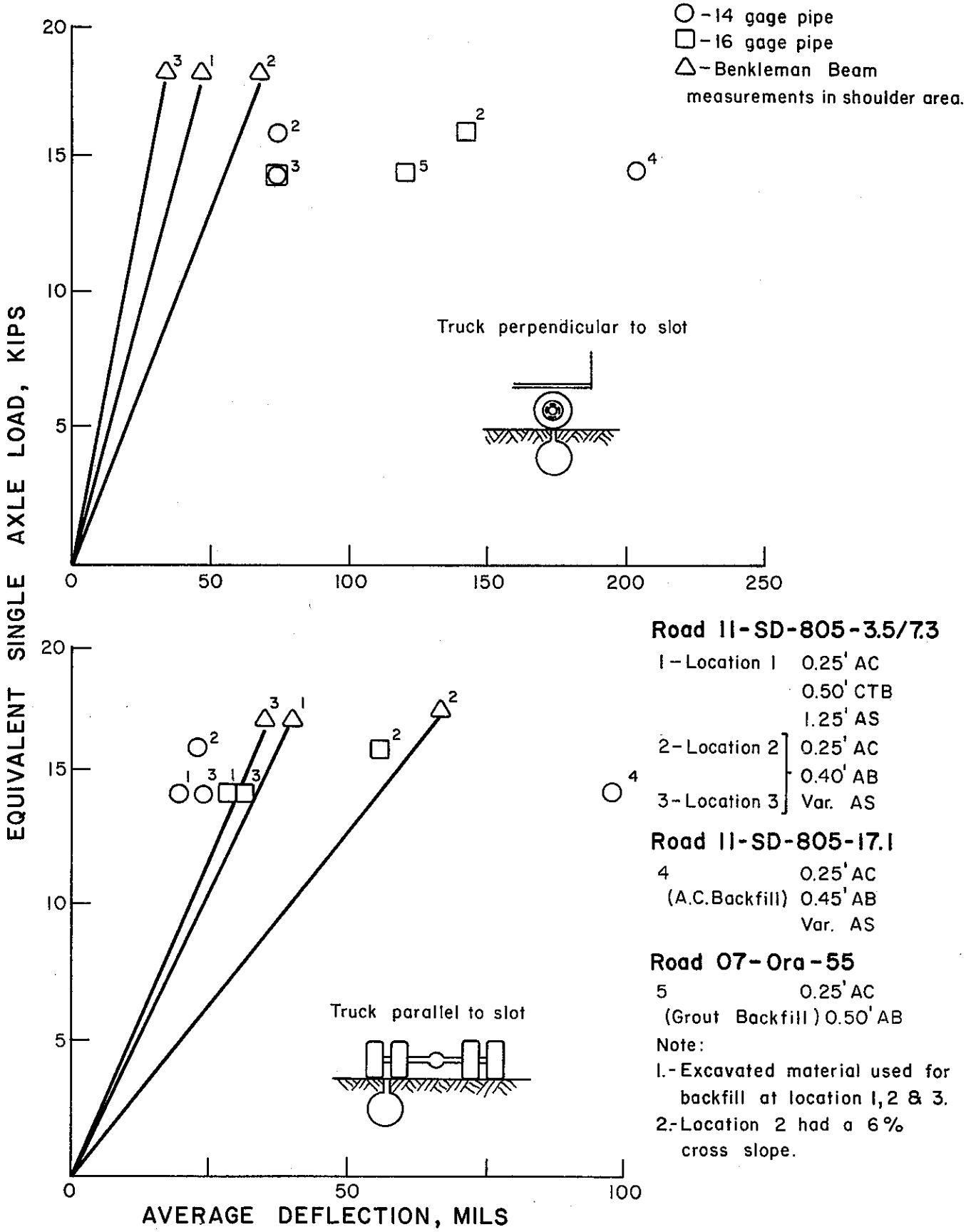

FIGURE 16

ClibPDF - www.fastio.com

ClibPDF - www.fastio.com

REFERENCE

1. "Investigation of the Destructive Effect of Flotation Tires on Flexible Pavements", E. Zube and R. Forsyth, January 1965.

ClibPDF - www.fastio.com

ClibPDF - www.fastio.com

APPENDIX

DRAWING NO. 1	12" thru 24" Slotted C.S.P. Drain Details D98-4 dated June 4, 1970.
DRAWING NO. 2	12" thru 24" Slotted C.S.P. Drain Details SD98-5 dated April 21, 1971.
DRAWING NO. 3	Special Grate Slot Detail

ClibPDF - www.fastio.com

ClibPDF - www.fastio.com

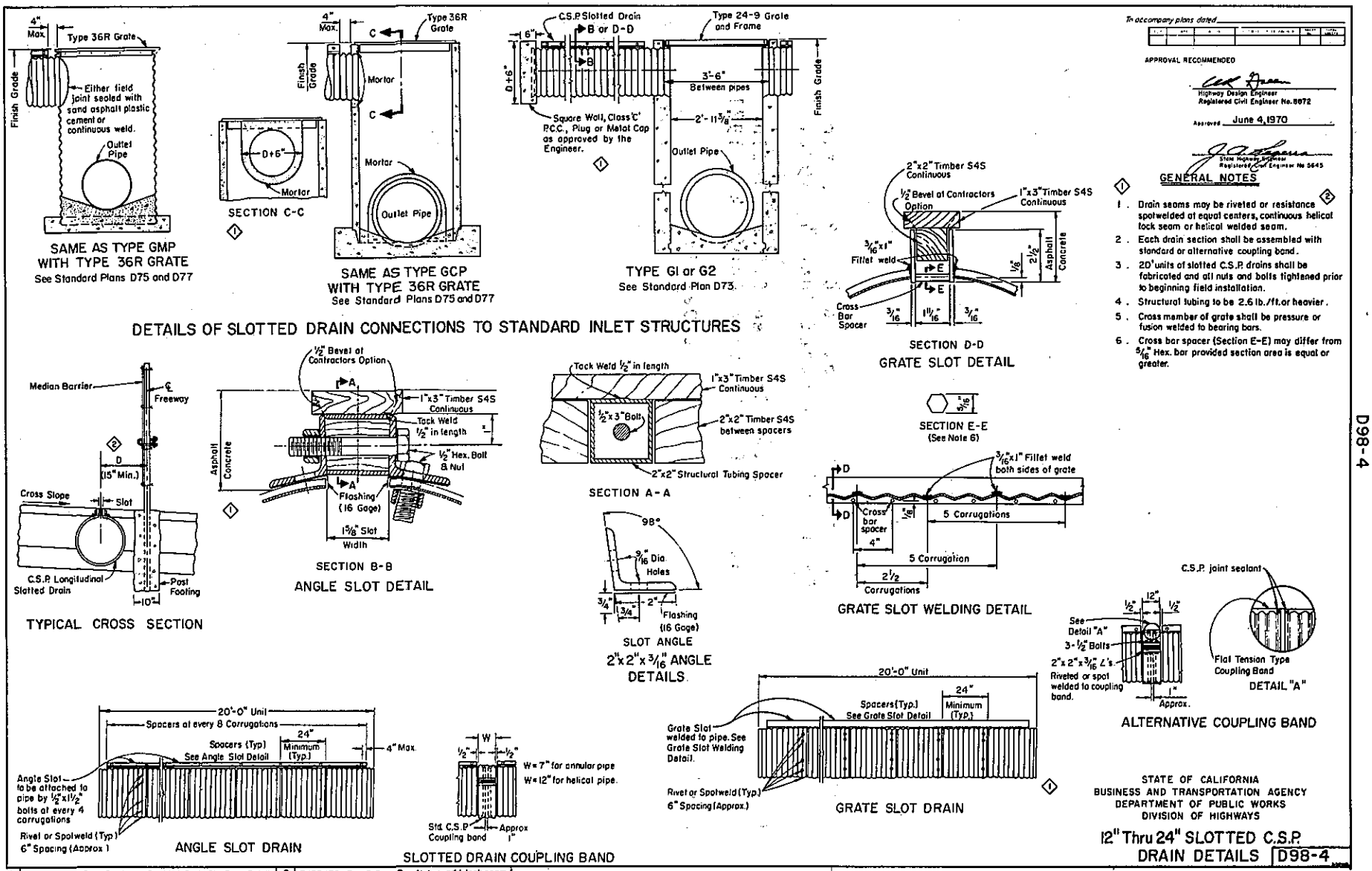

DRAWING NO. 1

ClibPDF - www.fastio.com

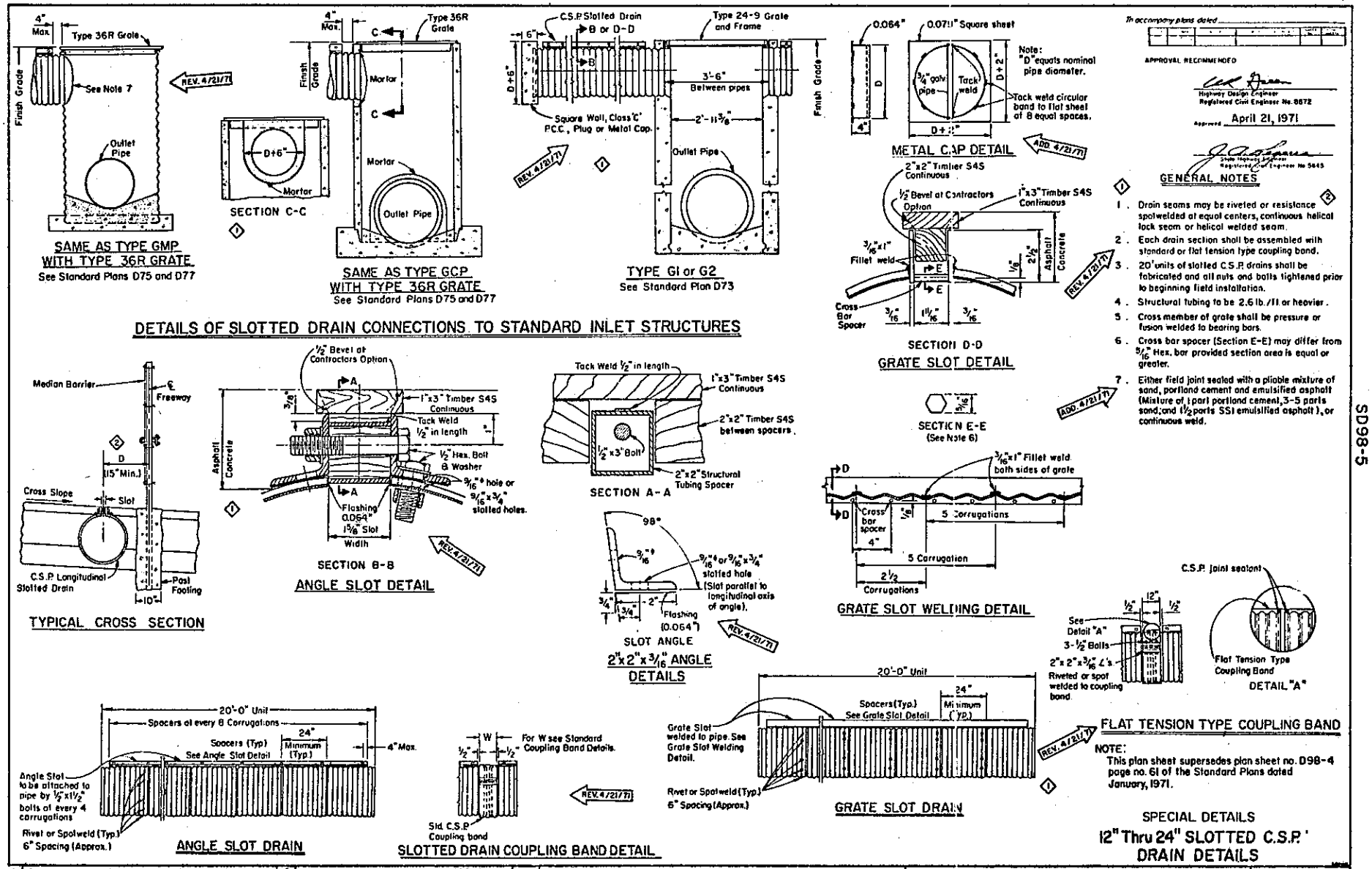

DRAWING NO. 2

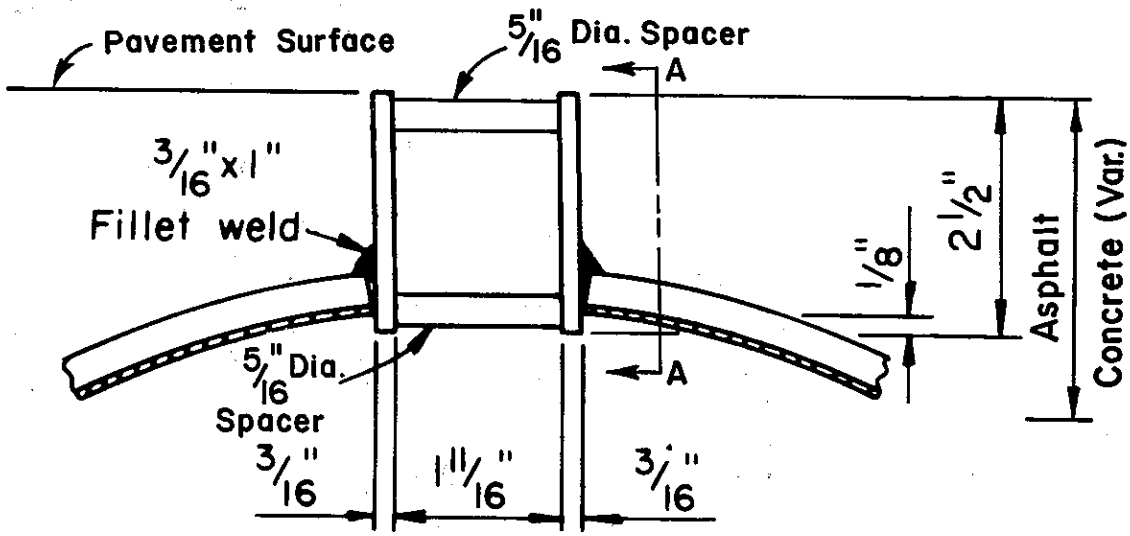

SPECIAL GRATE SLOT DETAIL

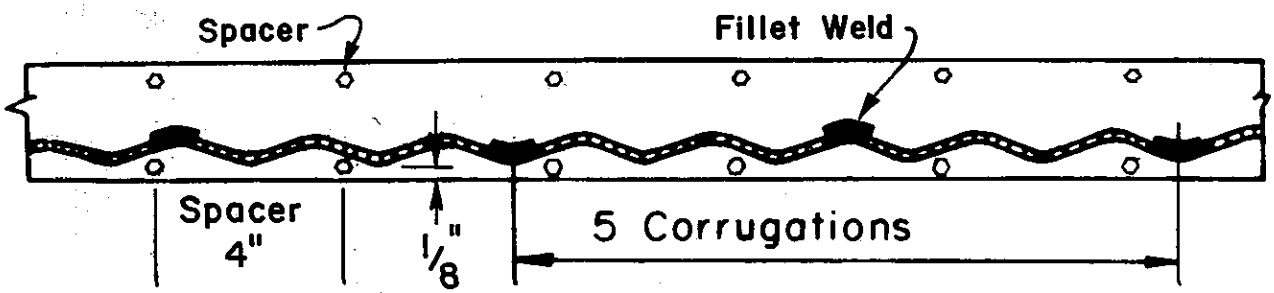

SECTION A-A

DRAWING NO. 3

ClibPDF - www.fastio.com