3849
C.2

LIBRARY COPY
Materials & Research Dept.

68-55

ClibPDF - www.fastio.com

3849

Steel, Reinforcing

HIGHWAY RESEARCH REPORT

METHOD TO DETERMINE THE AXIAL TENSILE FORCE IN HIGH STRENGTH PRESTRESSING STRAND

April, 1968

STATE OF CALIFORNIA

TRANSPORTATION AGENCY

DEPARTMENT OF PUBLIC WORKS

DIVISION OF HIGHWAYS

MATERIALS AND RESEARCH DEPARTMENT

RESEARCH REPORT

NO. M & R 646322

ClibPDF - www.fastio.com

STATE OF CALIFORNIA—TRANSPORTATION AGENCY

RONALD REAGAN, Governor

DEPARTMENT OF PUBLIC WORKS
DIVISION OF HIGHWAYS
MATERIALS AND RESEARCH DEPARTMENT
5900 FOLSOM BLVD., SACRAMENTO 95819

April 1968

Report M & R No. 646322

Mr. J. A. Legarra
State Highway Engineer

Dear Sir:

Submitted herewith is a research project titled:

METHOD TO DETERMINE

THE AXIAL TENSILE FORCE IN HIGH STRENGTH

PRESTRESSING STRAND

ERIC F. NORDLIN
Principal Investigator

W. H. Ames and E. R. Post
Co-Investigators

Assisted By

E. A. Davis
R. Elliott
W. E. Faist
M. H. Johnson
R. R. Trimble

Yours very truly,

JOHN L. BEATON
Materials and Research Engineer

ClibPDF - www.fastio.com

ABSTRACT

REFERENCE: Nordlin, E. F., W. H. Ames, and E. R. Post, "Method to Determine the Axial Tensile Force in High Strength Prestressing Strand", State of California, Department of Public Works, Division of Highways, Materials and Research Department, Research Report 646322, April 1968.

ABSTRACT: This is a report of the theoretical and practical development of an instrument which can be used to determine the magnitude of the axial tensile force existing at any point along a prestressing strand of the type commonly employed in prestressed pretensioned concrete structural units. The instrument, in addition, can be used to determine (1) the friction losses that occur at intermediate alignment and harping points, (2) the variation in strand force in multiple strand structural units as the result of single tensioning operations, and (3) the creep losses that occur. The use of this instrument will aid in the elimination of many of the differential camber problems currently encountered in construction due to non-uniform force in the strands. This instrument may also be used to insure that the stressing forces are in accord with the engineer's design. From a statistical study of the instrument based on five random test observations along a strand, it was determined that the strand force within the design range can be predicted to $\pm$ 0.4 kips or 1.5 percent with 95 percent confidence limits.

KEY WORDS: Prestressing, prestressed concrete, tensile stress, tension, force, steel wire, testing equipment, friction tests, creep, statistical analysis.

ClibPDF - www.fastio.com

ACKNOWLEDGEMENTS

1. Kuhlman, H. F. (retired), the pioneer of the beam concept. The ground work laid by Kuhlman was a contributing factor which led to the successful development of the beam.

2. Barton, J. E., Supervisor of the Electrical Instrumentation Unit of the Structural Materials Section, Materials and Research Department, California Division of Highways, for suggestions in regard to the electrical aspects of the beam, electronic instrumentation and computer programming, particularly to W. Chow, R. Donner, and D. Gans of his staff.

3. Perry, D. C., PhD, Associate Professor of Civil Engineering, Sacramento State College, for his constructive criticism on the function of the beam "cross" strain gages.

ClibPDF - www.fastio.com

TABLE OF CONTENTS

SECTION		PAGE
I.	INTRODUCTION AND BACKGROUND	1
II.	SUMMARY AND CONCLUSIONS	2
III.	DISCUSSION	3
	A. Determination of a Definite Strain Reading Point	3
	B. Theoretical Analysis	5
	1. Beam	5
	2. Strand	6
	3. Beam Strain as a Function of Strand Force	8
	C. Beam Design	9
	D. Beam Calibration	11
	1. 1/2-inch Diameter 270 ksi Prestressing Strand	11
	2. 7/16-inch Diameter 270 ksi Prestressing Strand	12
	E. Statistical Study	13
	F. Correlation	16
	REFERENCES	19
	FIGURES	
	TABLES	

ClibPDF - www.fastio.com

Figure No.	Figure Title
1	Original California Beam Design.
2	Anderson's Beam Design.
3	Strand Stress Beam No. 2 and Digital Strain Indicator.
4	Disassembled View of Strand Stress Beam No. 1.
5	Strain Gage Location and Circuitry.
6	Beam Strain Analysis Prior to and at the Instant of Contact of Beam and Strand Digital Strain Indicator.
7	Digital Strain Indicator.
8	Free Body Diagrams of Forces on Loading Yoke, Beam, and Strand.
9	Theoretical Section Properties of Beam No. 1.
10	Schematic of Laboratory Calibration Setup.
11	Calibration Curve of Beam No. 1 using 1/2-inch Bethlehem Strand.
12	Calibration Curve of Beam No. 1 using 1/2-inch Union Strand.
13	Calibration Curve of Beam No. 1 using 1/2-inch U. S. S. Strand.
14	Calibration Curve of Beam No. 1 using 1/2-inch C. F. & I. Strand.
15	Comparison of Calibration Curves for Beam No. 1 (1/2-inch Strand).
16	Comparison of Calibration Curves for Beam No. 1 (7/16-inch Strand).
17 - 19	Calibration Curves (95% Confidence Limits).
20	Theoretical Section Properties of Beam No. 2.
21	IBM 360 Fortran Flow Chart.
22	Computer Program.
23	Theoretical Curves with Strand Moment of Inertia as a Variable.
24	Theoretical Curves with Beam Moment of Inertia as a Variable.
25	Correlation between Calibration and Theoretical Curves for 1/2-inch Strand.
26	Correlation between Calibration and Theoretical Curves for 7/16-inch Strand.

ClibPDF - www.fastio.com

Table No.	Table Designation
1 (4 sheets)	Laboratory and Field Calibration Data for Beam No. 1.
2	Theoretical Section Properties of 1/2-inch Strand.
3	Readings on Harped 1/2-inch Strand.
4 (2 sheets)	Laboratory Calibration of 7/16-inch Strand.
5	Statistical Comparison between Beam No. 1 and Beam No. 2.
6 (14 sheets)	Data for the Statistical Comparison of Beams No. 1 and No. 2.
7	Laboratory Test on Beam No. 2 with the Transverse Strain Gages Disconnected.
8	Modulus of Elasticity for 1/2-inch Strand.
9	Section Properties of Beams No. 1 and No. 2 as determined from Laboratory Tests.

ClibPDF - www.fastio.com

ClibPDF - www.fastio.com

I. INTRODUCTION AND BACKGROUND

In prestressed pretensioned concrete construction, there is a need for a versatile instrument which can be utilized any time prior to placement of the concrete to determine the magnitude of axial tensile force existing in the high strength prestressing strands in the areas of critical stress. By use of such an instrument, it would be possible to eliminate many of the camber problems currently encountered due to non-uniform force in the strands, and it would help to insure that the actual stressing forces are in accord with the engineer's design.

Currently, a compressive load cell instrument is used to determine the magnitude of axial tensile force in high strength prestressing strands. This type instrument, which has a center hole, is placed over the strand and located between the anchoring strand bulkhead and a strand cone friction anchor. The compressive load cell instrument has many inherent shortcomings which include: (1) the instrument can only be used to determine the magnitude of the axial tensile force at an end of a strand and hence it is not suitable to determine the friction losses that occur at intermediate alignment or harping points, (2) once a strand is tensioned, the instrument cannot be conveniently removed and used on other strands, and unless other instruments are available it is not practicable to obtain more than one measurement for any one structural unit, (3) the instrument is not reliable for obatining measurements during any extended period of time if the ambient temperature is changing, because the initial no-load reading point of the instrument will drift, and (4) the instrument is not reliable for obtaining measurements on harped strands because of the eccentric loading conditions.

Therefore, the purpose of this project was to develop a versatile instrument, which is called the STRAND STRESS BEAM, to replace the ineffective compressive load cell instrument currently being used.

Figure 1 shows the original California Strand Stress Beam which was developed in this laboratory to determine the magnitude of the axial tensile force in prestressing strands in the areas of critical stress. This instrument was developed by a tedious trial and error process. Due to several factors, such as an inefficient geometrical beam section, improper location of the strain gages to obtain the maximum sensitivity, and failure to utilize "cross" strain gages to determine a definite strain reading point, the beam was only partially successful.

Utilizing the beam principle, an instrument was developed (Ref. 1) as shown in Figure 2 for measuring the axial tensile force in high strength prestressing wires. However, a study of this approach indicated that such an instrument would not function if it were to be used on high strength prestressing strands in place of wire, because it would be practically impossible by use of a micrometer to apply a force of the magnitude necessary to deflect the strand.

ClibPDF - www.fastio.com

II. SUMMARY AND CONCLUSIONS

The Strand Stress Beam was developed as shown in Figures 3 and 4. It is readily portable and operative by one man. Essentially it functions as a beam simply supported upon the strand. A midspan concentrated force is applied by means of a screw through a rectangular yoke to both the beam and strand. The midspan deflections of the beam and strand move through a controlled distance. Strain gages are positioned on the beam so as to (1) always obtain a definite strain reading point at the instant the beam and strand come in contact, and (2) provide beam strain readings, at the location of the strain gages, which can be correlated to the axial tensile force existing in the strand.

Within the design range of both the 1/2 and 7/16 inch diameter 270 ksi prestressing strand, an extremely good correlation was obtained between the laboratory and field calibrated curves and the theoretical curve as shown in Figures 25 and 26. The theoretical equation relating beam strain (ϵ) to strand force (T_o) and the values for the variables are shown in each Figure. The beam moment of inertia (I_B) and the distance (y) from the beam's (Beam No. 1) neutral axis to the two SR4 Baldwin Cross Strain Gages were accurately determined by laboratory tests. The other variables are also readily obtainable.

From a statistical study of the beam based on five random test observations along a strand, it was determined that for any magnification of beam strain (ϵ) the strand force (T_o) within the design range can be predicted to $\pm$ 0.4 kips or 1.5 percent with 95 percent confidence limits. This error can be attributed primarily to a varying moment of inertia (I_S) of the strand caused by (1) the lay of the strand, (2) the individual wires of the strand not being perfectly round, and (3) the diameter of the individual wires which may vary from manufacturer to manufacturer and may vary with a given manufacturer for strands made at different times and plants.

It was also determined from the statistical study that the testing error of the beam, at the design range of strand force, was less than 0.2 percent. This was possible because of the unique design of the beam, which was of such a geometrical shape that cross strain gages were utilized to obtain a definite (maximum) strain reading the instant the deflected beam and strand came in contact.

It is therefore concluded that a curve relating beam strain (ϵ) to strain force (T_o) can be obtained from a theoretical solution and readily verified by several laboratory tests. By obtaining the curve in this manner, it is estimated that 80 to 100 man hours of calibration time per beam can be saved.

ClibPDF - www.fastio.com

III. DISCUSSION

The instrument developed, which can be utilized any time prior to placement of the concrete, assuming forms or other obstructions do not prevent access to prestressing tendons, to determine the magnitude of axial tensile force in high strength prestressing strands in the areas of critical stress, is shown in Figure 3. A disassembled view of the instrument is shown in Figure 4.

The design of the Strand Stress Beam, herein outlined, is unique because of two features, (1) the geometrical shape of the beam and (2) the utilization and location of two SR4 "cross" strain gages to determine the strain in the beam at the instant of contact between the beam and strand.

A. Determination of a Definite Strain Reading Point.

After an intensive study of the partially successful beam design, it was concluded that a method had to be devised to obtain a definite strain reading point the instant the deflected beam and strand come in contact. To achieve this, two SR4 Baldwin Cross Strain Gages (Type AFX-7-S6) were recessed in a slot and symmetrically located with respect to the midspan axis of the beam as shown in Figure 5.

The two "cross" strain gages (two longitudinal and two transverse) are connected as the four arms of the Wheatstone Bridge which in turn is connected to a Budd Digital Strain Indicator (Model P-350). As shown in Figure 5, the Wheatstone Bridge will algebraically add the strain readings of the longitudinal and transverse strain gages when they are in tension and compression, respectively. As a result, the output of the Wheatstone Bridge will increase in accordance with Poisson's Ratio to a value of 2.58 times as large as the strain output from a single longitudinal strain gage*.

A free-body diagram of the forces acting on the beam and strand just prior to contact between the two units is shown in Figure 6. The magnitude of strain (ϵ) existing at the location of the strain gages for this condition can be expressed as:

$$\epsilon = 2(1+0.29)\,\epsilon_1$$
$$\epsilon = 2.58\,\epsilon_1 \qquad (1)$$

---

* Due to the effect of Poisson's Ratio (P_r), the strain magnification factor 2.58 is computed from the relationship $2(1 + P_r) = 2(1 + 0.29)$.

ClibPDF - www.fastio.com

A free-body diagram of the forces acting on the beam and strand at the instant of contact between the two units is also shown in Figure 6. The differential increase in the midspan concentrated force (ΔP_1) required to obtain this condition will be distributed between the point of contact ($\eta \Delta P_1$) and the end supports ($\xi \Delta P_1$). The forces ($\frac{1}{2}\eta \Delta P_1$) will induce bending moments (M) at the interface of the two lower flanges and the web of the beam cross section. As a result, the strains in both the longitudinal and transverse strain gages change in direction as opposed to the condition prior to contact.

In addition, the strain gages are influenced by the radial tensile strain components which occur due to the compressive forces ($\frac{1}{2}\tau \Delta P_1$). As a result, the longitudinal and transverse strain gages are subjected to tensile strains.

Therefore, the magnitude of the strain (ϵ) existing at the location of the strain gages for this condition can be expressed as:

$$\epsilon = 2.58\,\epsilon_1 + \{2.(1.29\,\epsilon_{12} - [2(1.29)\,\epsilon_{11} + 2(1.29)\,\epsilon_{12}]\}$$

$$\epsilon = 2.58\,\epsilon_1 - 2.58\,[(\epsilon_{11} + \epsilon_2) - \epsilon_{12}] \qquad (2)$$

Where:

$$\epsilon_{11} + \epsilon_2 \gg \epsilon_{12}$$

It is now apparent from Equation 2 that at the instant of contact between the beam and strand the magnitude of the strain (ϵ) at the location of the strain gages will become less positive.

Referring to Figure 7, the magnitude of strain (ϵ) in microinches per inch, is read on the Budd Indicator's Strain Counter. This is accomplished by use of the Rebalancing Knob to bring the galvanometer needle to a zero position on the Null Meter. As the beam is deflected under the midspan concentrated force (P), the galvanometer needle rotates in a counterclockwise direction; whereas, at the instant of contact between the beam and strand, the galvanometer needle immediately responds to the strain (ϵ) becoming less positive by rotating in a clockwise direction. This is a definite strain reading point.

In addition to increasing the output of the Wheatstone Bridge, the 2 transverse gages compensate for temperature changes and are therefore independent of temperature changes as long as these take place uniformly throughout the material.

The recessed slot in the bottom of the beam also serves the purpose of protecting the two SR-4 cross strain gages and their connections with the lead out wire to the Wheatstone Bridge against physical damage. After the strain gages have been placed and the circuitry tested, the slot was filled with an elastic epoxy to protect the gages against moisture.

ClibPDF - www.fastio.com

B. Theoretical Analysis

The Strand Stress Beam Instrument functions as a beam simply supported on the strand. A midspan concentrated force is applied, by means of a screw, through a rectangular loading yoke to both the Strand Stress Beam Instrument and strand. The Strand Stress Beam Instrument, hereinafter referred to as the "beam", is subjected to transverse loading, whereas the strand is subjected simultaneously to axial tension and transverse loading. In the case of the strand, a solution is not possible by superposition methods but must be arrived at by methods that take into account the change in deflection produced by the axial tensile forces. Free-body diagrams of the loading yoke, beam, and strand are shown in Figure 8. The following assumptions were employed:

(1) The deformations of the beam and strand are small, hence the approximate formula for curvature

$$\frac{1}{R} = -EI \frac{d^2 w}{dx^2} = M(x)$$

will be used.

(2) Assuming small end rotations, the vertical component of the strand tensile force and the horizontal component of the end reaction will be neglected.

(3) Neglect any increase in the strand tensile force due to the deflection of the strand.

(4) Neglect the effect of any frictional constraints that may develop at the end supports.

1. Beam

The midspan concentrated force (P) and the midspan deflection (δ) of the beam can be expressed as a function of the strain occurring at a distance (y) below the neutral axis of the beam at the location of the strain gages as follows:

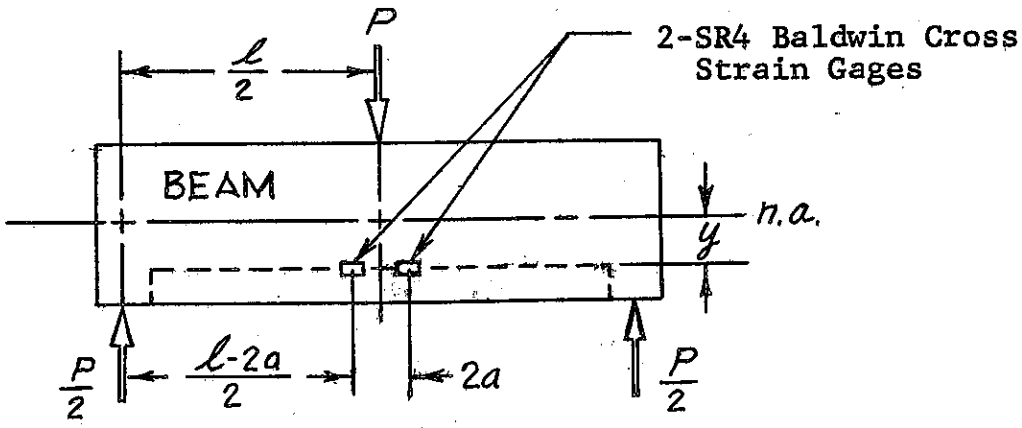

FREE-BODY DIAGRAM OF BEAM

ClibPDF - www.fastio.com

The midspan concentrated force (P) as a function of the strain is

$$M\,(\text{Strain Gages})(y) = EI\epsilon$$
$$P(\ell - 2a)(y) = 4EI\,\epsilon$$
$$P = \frac{4EI\epsilon}{y(\ell - 2a)} \tag{3}$$

The midspan deflection (δ) as a function of the strain is

$$\delta = \frac{P\ell^3}{48\,EI}$$

Substituting into Equation (3), we obtain

$$\delta = \frac{\ell^3\epsilon}{12\,y(\ell - 2a)} \tag{4}$$

2. Strand

The midspan deflection (w) of the strand can be expressed as a function of the axial tensile force in the strand for various boundary conditions as follows:

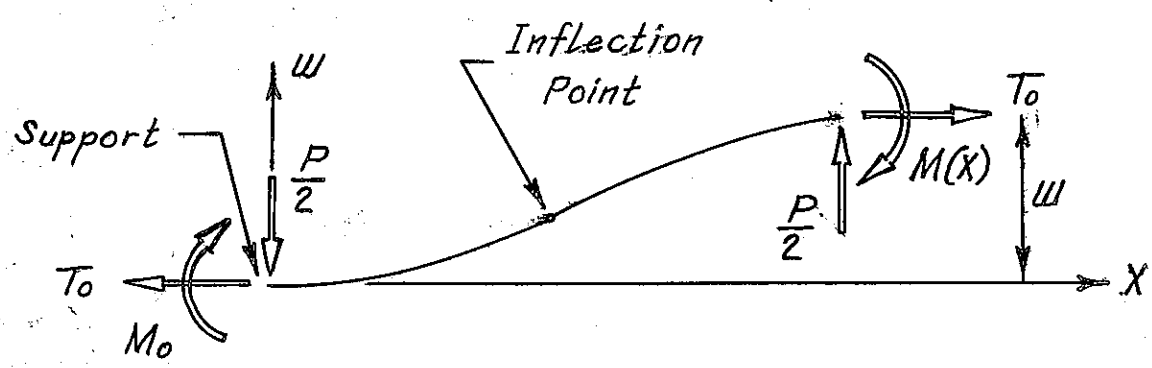

FREE-BODY DIAGRAM OF STRAND

Summing forces equal to zero, we obtain

$$M(x) + T_o w = \frac{P}{2}X - M_o$$

However, as stated in the assumptions

$$M(x) = -EI\frac{d^2w}{dx^2}$$

ClibPDF - www.fastio.com

Therefore

$$\frac{d^2w}{dx^2} - \frac{T_o}{EI} w = -\frac{P}{2EI} x + \frac{M_o}{EI} \tag{5}$$

Introducing the notation

$$K^2 = \frac{T_o}{EI}$$

Equation (5) becomes

$$\frac{d^2w}{dx^2} - K^2 w = -\frac{K^2 P}{2T_o} x + \frac{K^2 M_o}{T_o} \tag{6}$$

Equation (6) can be classified as a second order, nonhomogeneous, linear, ordinary differential equation with constant coefficients.

The complete solution to the differential equation is

$$w = C_1 e^{kx} + C_2 e^{-kx} + \frac{P}{2T_o} x - \frac{M_o}{T_o} \tag{7}$$

The two arbitrary constants can be determined for the necessary boundary conditions (BC)

BC 1. at $x = 0, \quad w = 0$

BC 2. at $x = \frac{\ell}{2}, \frac{dw}{dx} = 0$

Thus

$$C_1 = -\frac{P - 2KM_o e^{-A}}{4T_o K \cosh A} \tag{8}$$

$$C_2 = \frac{P + 2KM_o e^{A}}{4T_o K \cosh A}$$

$$A = K\frac{\ell}{2} \tag{9}$$

ClibPDF - www.fastio.com

Substituting Equations (8) and (9) into Equation (7) and letting $X = \frac{\ell}{2}$, we obtain the deflection of the strand at midspan:

$$W = \frac{P}{2T_0K}\left[A - \tanh A - \frac{2KM_0}{P}\,\frac{(\cosh A - 1)}{\cosh A}\right] \tag{10}$$

If the strand is not restrained at the supports and is free to rotate ($M_0 = 0$), the midspan deflection will be

$$W = \frac{P}{2T_0K}(A - \tanh A) \tag{11}$$

If the strand is completely restrained against rotation at the supports, the end restraining moment (M_0) can be found as follows:

The necessary boundary condition for a fixed end is that $\frac{dw}{dX} = 0$, hence differentiating Equation (7) and setting $X = 0$, we obtain

$$M_0 = \frac{P}{2K}\,\frac{(\cosh A - 1)}{\sinh A} \tag{12}$$

Substituting Equation (12) into Equation (10), we obtain the midspan deflection of the strand when the supports are completely restrained against rotation

$$W = \frac{P}{2T_0K}\left[A - \tanh A - \frac{(\cosh A - 1)^2}{\sinh A \cosh A}\right] \tag{13}$$

Beam Strain as a Function of Strand Force

3. The total midspan deflection that the beam and strand will move through is a known controllable distance, say Δ, hence the following relationship must hold true:

Δ = Midspan Beam Deflection (δ) + Midspan Strand Deflection (W)

$$\Delta = \delta + W \tag{14}$$

ClibPDF - www.fastio.com

Substituting Equations (3), (4), (11), and (13) into Equation (14) and rearranging terms, the following expressions relating beam strain (ϵ) to the axial tensile force in the strands (T_o) are:

$$\epsilon = \left[\begin{array}{ll} \dfrac{12y(\ell-2a)\Delta}{\ell^3\left[1+\dfrac{24}{k^3\ell^3}\dfrac{E_B I_B}{E_S I_S}(A-\tanh A)\right]} & \begin{array}{r}(15)\\ \text{SIMPLE}\\ \text{SUPPORTS}\end{array} \\ \\ \dfrac{12y(\ell-2a)\Delta}{\ell^3\left\{1+\dfrac{24}{k^3\ell^3}\dfrac{E_B I_B}{E_S I_S}\left[A-\tanh A-\dfrac{(\cosh A-1)^2}{\sinh A\cosh A}\right]\right\}} & \begin{array}{r}(16)\\ \text{FIXED}\\ \text{SUPPORTS}\end{array} \end{array} \right]$$

Where: $A = k\dfrac{\ell}{2}$, $k^2 = \dfrac{T_o}{E_S I_S}$

C. Beam Design

In the development of the original beam it was determined that to obtain a reasonably good calibration curve (beam strain versus strand force), the midspan deflections of the beam and strand should be approximately 0.070 and 0.130 inches, respectively, when the axial tensile force in a 1/2 inch diameter prestressing strand was in the range of 30 to 35 kips. As mentioned previously, the midspan load (P) is applied to both the beam and strand, by means of a screw, through a loading yoke. Selecting a 5/8-inch diameter Number 8 Acme threaded screw, it was determined that the load (P) should not exceed 1600 pounds. Using the classical beam formula

$$I = \frac{P\ell^3}{48E\delta}$$

and setting

P = 1600 lbs.
ℓ = 16 in.
δ = 0.070 in.
$E = 29.5 \times 10^6$ psi

a required moment of inertia (I) equal to 0.0580 is obtained.

ClibPDF - www.fastio.com

It was also determined from the sensitivity of the SR4 Baldwin Cross Strain Gages (Type AFX-7-S6) that to obtain good results the longitudinal strain gages should have a range of approximately 1100 to 1300 x 10^{-6} in/in. Therefore, using the Equation (4)

$$y = \frac{\ell^3 \epsilon}{12 \delta (\ell - 2a)}$$

and upon setting

ℓ = 16 in.
ϵ = 1100 x 10^{-6}
δ = 0.070 in.
2a = 0.30 in. (distance between strain gages)

a required distance (y) from the neutral axis of the beam to the strain gages equal to 0.35 inches is obtained.

To satisfy all the conditions previously outlined, in addition to providing a minimum size slot to accommodate the cross strain gages and their lead out wire to the Wheatstone Bridge, a beam of geometrical shape of dimensions as shown in Figure 9 was determined by a trial and error process. The maximum fiber stress (f) in the beam is calculated using the formula

$$f = \frac{P\ell}{4I} y$$

and upon setting

P = 1600 lbs.
ℓ = 16 in.
y = 0.547 in.
I = 0.0585 in^4

a fiber stress (f) equal to 44,880 psi is obtained. Therefore, to keep the stress level in the beam below the proportional limit of the material, a high strength, heat treated AISI 4140 (leaded) alloy steel, which has a yield strength of 130 ksi as determined by the 2% offset method and a tensile strength of 150 ksi, was selected. Other advantages in using this type of steel are its excellent fatigue life and good machinability.

To check that the beam strain (ϵ) is within the desired range of the strain gages, Equations (15) and (16) are used. Beam strain values of 1080 and 1240 x 10^{-6} in/in, respectively, are obtained with the following values:

T_o = 35 kips
ℓ = 16 in.
y = 0.347 in.
2a = 0.30 in.
Δ = 0.200 in.
I_B = 0.0585 in^4
I_S = 0.00217 in^4 (1/2-inch diameter strand)
E_B = 29.5 x 10^6 psi
E_S = 26.5 x 10^6 psi

Therefore, with dimensions as shown in Figure 9, the beam (Beam No. 1) meets all the requirements specified.

ClibPDF - www.fastio.com

The beam length of approximately 16 inches center to center between the simple supports was selected both for ease of handling and to facilitate its use between the vertical stirrups of prestressed pretensioned concrete beams. The stirrups in the areas of critical bending stress are commonly spaced at 24-inch centers in California practice.

D. Beam Calibration

The strand stress beam (Beam No. 1) was calibrated in both the laboratory and field on 1/2-inch diameter 270 ksi prestressing strand of various lengths and manufacture. In addition, Beam No. 1 was calibrated in the laboratory on 7/16-inch diameter 270 ksi prestressing strand of various manufacture. These two diameters of strand were selected because they represent a large percentage of strand used, particularly in highway structures.

The laboratory test setup for calibrating the beam is shown in Figure 10. The axial tensile force in the strand was accurately determined by the two tensile splice load cells. The two tensile load cells were calibrated in series against a National Bureau of Standards (NBS) load cell which has an accuracy of 0.1 percent. The compressive load cell which has an indicator counter that can be read directly in kips, was used only during the tensioning of the strand as a rapid method of obtaining the approximate desired strand force.

The field test setup was similar to that used in the laboratory except that the strand length was increased from 13 to 71 feet. To minimize the effects of a varying ambient temperature on the strand force, the field tests were conducted at night when the temperature was essentially constant.

Tensile load cells were used at each end to determine tensioning forces. After obtaining a desired strand force, test observations were made with the beam at 5 random points along the strand. This procedure was repeated for various magnitudes of strand force until sufficient data were available to plot a calibration curve of beam strain versus strand force*. For purposes of this report only, the actual strain in the beam was used to facilitate direct correlation between the calibrated and theoretical curves.

1. 1/2-inch Diameter 270 ksi Prestressing Strand

The test data obtained by use of Beam No. 1 is shown in Table 1. The laboratory and field calibration curves of beam strain versus strand force for various brands of 1/2-inch strands are shown in Figures 11 through 14. The

---

* Beam Strain = $\frac{\text{Strain Reading}}{2\,(1 + 0.29)} \; \frac{(\text{GF Set on Budd Ind.})}{(\text{GF of Strain Gages})}$

GF = Gage Factor

ClibPDF - www.fastio.com

strand manufacturers, Bethlehem (Beth.), Union, United States Steel (USS), and Colorado Fuel and Iron (CF&I), were selected to be tested because they represent the bulk of the strand used in prestressed pretensioned structural units in California highway work.

It is apparent from Figures 11 through 14 that the beam calibration curve for any strand manufacture is independent of the length of the strand. A comparison of the beam calibration curves for the four different brands of strand is shown in Figure 15. For all practical purposes, the calibration curves for Beth. and Union strand are identical, and those for USS and CF&I strand are essentially identical. The minor difference that exists between the paired beam calibration curves can be attributed to the moment of Inertia (I_s) and the lay length (pitch) of the strand. It is apparent from Equation (15) that (1) as I_s increases the beam strain (ϵ) will increase and (2) as the lay length of the strand increases the bending stiffness $E_s I_s$ of the strand increases, and hence the beam strain (ϵ) will increase.

The moment of inertia, for each brand, calculated about the two axes 1-1 and 2-2 is shown in Table 2. Beth. strand has a moment of inertia nearly equal to CF&I strand; however, it has the shortest lay length of any of the four different brands considered which is most likely the reason for the beam calibration curve lying to the left of the USS and CF&I curves. Union has a lay length approximately equal to CF&I strand; however, it has the smallest moment of inertia of any of the four brands which is most likely the reason for the beam calibration curve being nearly the same as the Beth. curve. Finally, the USS strand has a smaller moment of inertia but a slightly longer lay length than CF&I strand which explains why these two beam calibration curves are nearly identical.

A field study was also conducted on harped prestressing strands to determine if the beam's calibration would be affected if readings were taken near a harped strand point. As shown in Table 3, the variation between the arithmetic mean of five repeat beam test observations at four points along the strand is 92×10^{-6} in/in. This variation can be attributed to the varying moment of inertia of the strand. From the statistical study it was determined that the strain readings could be expected to vary $\pm 110 \times 10^{-6}$ in/in for a gage factor of 0.55 set on the Budd Strain Indicator. Therefore, it is concluded that the Strand Stress Beam reading is not affected for test observations as close as 12 inches to a harping point.

2. 7/16-inch Diameter 270 ksi Prestressing Strand

The test data obtained by use of Beam No. 1 is shown in Table 4. The laboratory calibration curves of beam strain versus strand force for various brands of 7/16-inch strand are shown in Figure 16. As apparent, the curves of the three manufacturers exhibit the same pattern obtained for the 1/2-inch diameter

ClibPDF - www.fastio.com

strand. It is therefore reasonable to assume that the mechanical properties of the 1/2 and 7/16-inch strand are the same.

E. Statistical Study

A statistical study was conducted to determine the inherent testing error of the Strand Stress Beam and the sampling error along prestressing strands made by various manufacturers when subjected to design axial tensile forces.

The sampling error along a strand can be attributed to a varying moment of inertia caused by (1) the lay of the strand, (2) the individual wires of the strand not being perfectly round, and (3) the diameter of the individual wires which may vary from manufacturer to manufacturer and also may vary within a given manufacturer for strands made at different times and plants.

It was previously hypothesized that the sensitivity of the Strand Stress Beam, to indicate the instant the beam and strand come in contact, was dependent on the geometrical shape of the beam. To quantitatively verify that an optimum beam design had been achieved, a second beam (Beam No. 2) of slightly different geometrical shape as shown in Figure 20 was statistically compared to Beam No. 1.

To perform the laboratory tests, a strand was subjected to an axial tensile force and then allowed to stand until the creep losses became negligible. The strand was then marked off in 20-1-inch increments and five (n) repeat observations were made with each beam (Beam No. 1 and Beam No. 2) at ten (k) alternate marks, each mark being referred to as a sample. To eliminate operator error, all tests were performed by one individual.

Denoting an observation by Y, the means of the sample and the strand to which it belongs by Y_s and Y_b respectively, the standard deviation (σ_B) of a beam between repeat tests about sample means, and the standard deviation (σ_S) between means of samples about the mean of a strand were determined from the following two formulas (Ref. 2):

Beam Testing Error

$$\sigma_B = \sqrt{\frac{\Sigma (Y - \bar{Y}_S)^2}{K(n-1)}}$$

Sampling Error Along A Strand

$$\sigma_S = \sqrt{\frac{\sigma_B}{n} + \frac{\Sigma(\bar{Y}_S - \bar{Y}_b)^2}{(K-1)}}$$

Where: n = 5, k = 10

The testing error of each beam and the sampling error along a strand for each of the various brands and for the extreme

ClibPDF - www.fastio.com

limits of strand force encountered in field applications, as determined by the standard deviation, are shown in Table 5. This Table is a summary of Table 6 which contains all the data for each beam and the calculated standard deviations for both type errors.

It is apparent from Table 5 that the sampling error (σ_S) along a strand is independent of the strand manufacture and the strand force. Therefore, the arithmetic mean of the standard deviation (σ_S) of all the tests conducted, which is equal to 10.0, is considered to be representative of any 1/2-inch dia. 270 ksi prestressing strand.

Data from the statistical study was then utilized to determine the precision of the Strand Stress Beam Instrument (Beam No. 1) to yield 95 percent confidence limits by use of formula (Ref. 3):

$$\bar{\bar{Y}} = \left[\bar{Y} \pm \frac{t}{\sqrt{n}}\,\sigma\right] 10^{-6}\ in/in$$

Where:

$\bar{\bar{Y}}$ = Precision of the strain reading

$\bar{Y}$ = Arithmetic mean beam strain of (n) random observations along the strand

t = 2.776 (student's "t")

n = 5

σ = Sampling error along a strand

$\sigma = (\sigma_S)\ (N)\ \dfrac{\text{(Gage factor of strain gages)}}{\text{(Gage factor set on Budd Indicator)}}$

N = (1 + 0.29) (No. of cross strain gages)

Applying this statistical formula to the calibration curves obtained, and recalling that the actual beam strain was used in plotting the curves, the precision of the beam strain (Y) of random observations along the strands is equal to:

$$\bar{\bar{Y}} = \left[\bar{Y} \pm \frac{2.776}{\sqrt{5}}(10.0)\right] 10^{-6}\ in/in$$

$$\bar{\bar{Y}} = \left[\bar{Y} \pm 12\right] 10^{-6}\ in/in$$

Now combining the calibration curves obtained with Beam No. 1 (as shown in Figure 15) into two curves, one of Beth. and Union strand and the other of USS and CF&I strand, the precision of the strain (Y) will 95 out of 100 times lie within the limits (dashed lines) as shown in Figures 17 and 18.

ClibPDF - www.fastio.com

This facilitates relatively accurate estimation of the unknown strand forces. For example, a strand that has in reality a force of 28.0 kips will 95 out of 100 times be determined to be within the limits of 28.0 ± 0.4 kips which is 1.5 percent.

This variation of ± 0.4 kips in determining the strand force in the design range (25 to 30 kips) of 1/2-inch diameter 270 ksi prestressing strand will hold true for any magnification of the beam strain. For example, using two "cross" strain gages with a gage factor of 1.94 and a gage factor of 0.55 on the Budd Indicator, the precision of the strain reading (Y) is equal to:

$$\bar{\bar{Y}} = \left[\bar{Y} \pm \frac{2.776}{\sqrt{5}} (10.0)(2.58) \frac{(1.94)}{(0.55)} \right] 10^{-6} \text{in/in}$$

$$\bar{\bar{Y}} = (\bar{Y} \pm 110)\ 10^{-6} \text{in/in}$$

Now magnifying the beam strain to the strain readings* that would be obtained on the Budd Indicator Strain Counter, the calibration curve for the Beth.-Union strand as shown in Figure 19 will be obtained. Thus it is apparent that the unknown strand force at 28.0 kips will 95 out of 100 times be within the limits (dashed lines) of ± 0.4 kips or 1.5 percent.

Returning now to the discussion on the sensitivity of the Strand Stress Beam, Beam No. 2 was designed to increase the sensitivity of the beam by increasing the bending stresses (see Figure 6) at the interface of the two lower flanges and web. This was accomplished as shown in Figure 20 by reducing the interface area approximately 24 percent.

It is apparent from Table 5 that the testing error for each beam (Beam No. 1 or Beam No. 2) is approximately of the same order of magnitude. This indicates that either (1) the response of the individual operating the beam instrument and Budd Indicator was too slow to detect any change in the sensitivity of the transverse strain gages which existed between the two beams of slightly different geometrical shape, or (2) the sensitivities of the two SR-4 Baldwin Cross Strain Gages (Type AFX-7-S6) and the beam (Beam No. 1) were already or nearly compatible. It seems reasonable to assume that the beam could be designed to be too sensitive as well as being too insensitive for any one type of "cross" strain gage.

After completion of the tests for the statistical study, the two transverse strain gages of Beam No. 2 were disconnected from

---

$$* \text{ Strain Reading} = (\text{Beam Strain})\ (2.58)\ \frac{(1.94)}{(0.55)}$$

$$= (\text{Beam Strain})\ (9.10)$$

ClibPDF - www.fastio.com

the strain gage circuitry. It was then demonstrated that without the transverse strain gages a definite strain reading point no longer existed at the instant of contact between the beam and strand. At a strand force of 29.0 kips, five repeat beam test observations were made at two random points along the strand by two individuals. The beam strain readings obtained for a "soft touch" and a "hard touch" are shown in Table 7. The soft touch is that point when one just feels the initial contact between the beam and strand. After the beam and strand are in contact, it is still possible to apply a firm additional load which will then deform the beam and strand. This load is referred to as the hard touch. As previously discussed, the two longitudinal strain gages are elongated from the radial tensile strain components which occur due to the compressive forces. As shown in Table 7, a beam strain difference of 50 and 68 x 10^{-6} in/in was obtained by two operators between a soft and hard touch. In the design range of the strand, a beam strain difference of 50 and 68 x 10^{-6} in/in is approximately a difference in strand force of 2 and 3 kips respectively. The primary reason why the original stress beam could not be relied upon for any degree of accuracy was because no provision was made to obtain a definite strain reading point which as demonstrated varies significantly from a soft touch to a hard touch and from operator to operator.

It is therefore concluded that the basic principle of utilizing cross strain gages to determine a definite strain reading point the instant the deflected beam and strand come in contact is quite sound.

F. Correlation

A correlation was obtained between the calibrated and theoretical curves of the strain in the Strand Stress Beam (Beam No. 1) versus the axial tensile force in 1/2 and 7/16-inch diameter 270 ksi prestressing strands.

The theoretical equations, previously derived, for the solution to the Strand Stress Beam are as follows:

$$\epsilon = \left[\begin{array}{l} \dfrac{12y(\ell-2a)\Delta}{\ell^3\left[1+\dfrac{24}{K^3\ell^3}\dfrac{E_B I_B}{E_S I_S}(A-\tanh A)\right]} \quad \text{(15) SIMPLE SUPPORTS} \\[2ex] \dfrac{12y(\ell-2a)\Delta}{\ell^3\left\{1+\dfrac{24}{K^3\ell^3}\dfrac{E_B I_B}{E_S I_S}\left[A-\tanh A-\dfrac{(\cosh A-1)^2}{\sinh A\cosh A}\right]\right\}} \quad \text{(16) FIXED SUPPORTS} \end{array} \right]$$

Where: $A = K\frac{\ell}{2}$, $K^2 = \frac{T_o}{E_S I_S}$

ClibPDF - www.fastio.com

Due to the number and combinations of variables involved, an IBM 360 Computer was used to facilitate obtaining the data needed to construct the theoretical curves. The Fortran flow diagram and program that were used are shown in Figures 21 and 22.

A strand modulus of elasticity (E_S) of 26.5×10^6 psi was used in the theoretical solutions. This value was determined from a statistical study conducted on three strand manufactures as shown in Table 8.

The beam moment of inertia (I_B) and the distance (y) from the beam's neutral axis to the cross strain gages was determined theoretically and by laboratory tests as shown in Figure 9 and Table 9 respectively.

THEORETICAL	LABORATORY
$I_B = 0.0585$ in^4	$I_B = 0.0560$ in^4
	$E_B = 29.5 \times 10^6$ psi
$y = 0.347$ in	$y = 0.352$ in

As apparent, a difference of 4.3 percent for the moment of inertia and 1.9 percent for the distance (y) exist between the two methods. However, this difference can be attributed to (1) the three small holes at the midspan of the beam needed to maintain the top and bottom bearing blocks in position and alignment, (2) the beam dimensions, measured by a micrometer, may vary $\pm$ 0.001 of an inch, (3) the cross section of the beam may vary along its length due to the quality of machining finish, and (4) the end constraints are not accurately known.

In the first group of theoretical curves relating beam strain to strand force, Figure 23, the strand moment of inertia (I_S) was treated as a variable with the other parameters listed being held constant. The points taken from the two combined calibrated curves (Beth.-Union and USS-CF&I strand) are shown to demonstrate the relative agreement between the theoretical curves and the calibration points. It is apparent that the strand cannot be considered to be fixed at the beam supports (Equation 16), as the theoretical curves, shown as dashed lines, indicate much higher strains than those determined from the actual stress beam calibrations. However, a good correlation was obtained when the strand was considered as being simply supported (Equation 15). Therefore, it is hypothesized that a point of contraflexure occurs in the strand at or near each support. This condition was verified by visual observation in the laboratory.

In the second group of theoretical curves relating beam strain to strand force, Figure 24, the beam moment of inertia (I_B) was treated as the variable, the moment of inertia of the strand was taken as 0.00217 in^4, and the other parameters are listed. The I_B's of 0.0585 in^4 and 0.0560 in^4 are, as previously mentioned, the theoretical and laboratory determined values,

ClibPDF - www.fastio.com

respectively. As apparent, a good correlation was obtained between the calibrated curves and the theoretical curve for the laboratory determined value of I_B.

Finally, as shown in Figure 25, an excellent correlation was obtained between the calibrated and theoretical curves for the 1/2-inch diameter 270 ksi prestressing strand in the design range of 25 to 30 kips. The value of the strand moment of inertia (I_s = 0.00215 in^4) used was the theoretical arithmetic mean of the four strand manufacturers taken about the 1-1 axis as shown in Table 2. As previously mentioned, the beam moment of inertia (I_B = 0.0560 in^4) and the distance (y = 0.352 in) from the beam's neutral axis to the strain gages were determined from laboratory tests. The calibrated curve was that curve which falls approximately on the lower limits of the Beth.-Union strand and the upper limits of the USS-CF&I strand as discussed in the Statistical Study Section and shown in Figures 17 and 18. Therefore, the calibrated curve will still be accurate within $\pm$ 1.5 percent with 95 percent confidence limits.

An excellent correlation was also obtained between the calibrated and theoretical curves for 7/16-inch diameter 270 ksi prestressing strands in the design range of 16 to 20 kips as shown in Figure 26.

It is therefore concluded that if the moment of inertia of the beam (I_B) and the distance (y) from the beam's neutral axis to the "cross" strain gages are first determined by laboratory tests the theoretical curve established by using those values will be as accurate as a laboratory calibrated curve within the design range of the strand. Thereby an instrument is provided that can be readily used as an accurate inspection tool on most pretensioning operations that utilize high strength strand as the stressing medium.

ClibPDF - www.fastio.com

REFERENCES

1. Anderson, Arthur R., Testing Topics, Vol. 8, No. 2, (Baldwin-Lima-Hamilton Corp., Philadelphia, Pa.), April, May, June 1953.

2. Cox, E. P. George and others, The Design and Analysis of Industrial Experiments, (New York: Hafner Publishing Company, 1954).

3. Freund, John E., Modern Elementary Statistics, (New York: Prentice-Hall, Inc., 1952).

ClibPDF - www.fastio.com

ClibPDF - www.fastio.com

ORIGINAL CALIFORNIA BEAM DESIGN

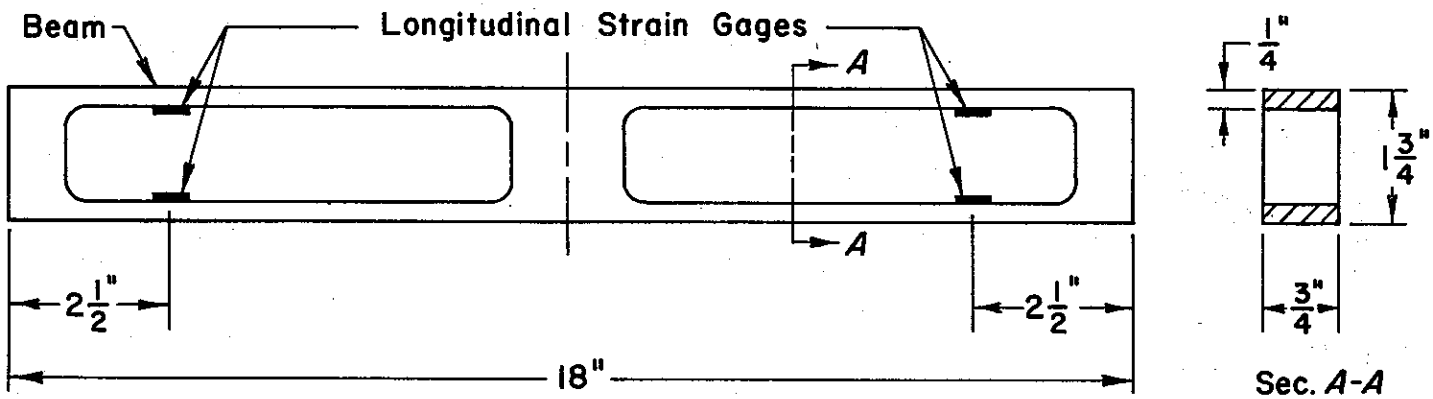

Figure 1

ANDERSON'S BEAM DESIGN

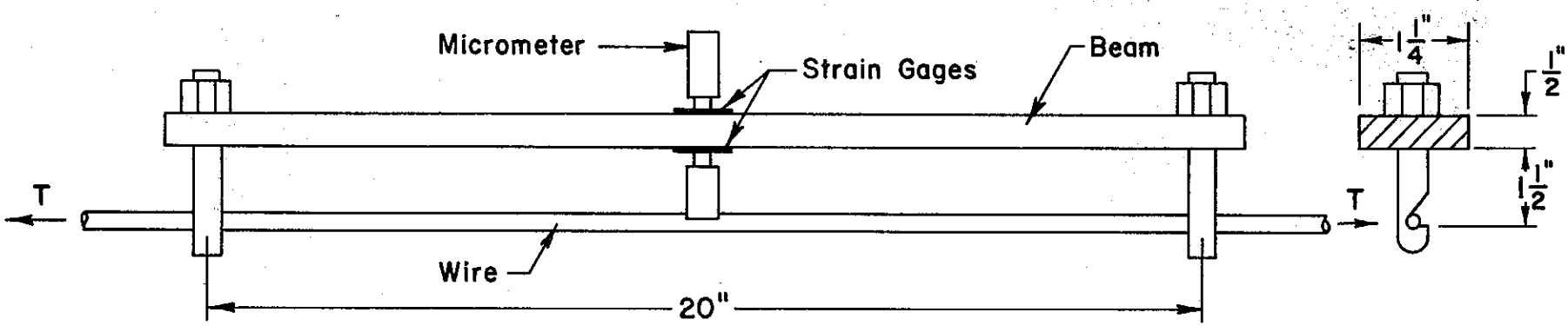

Figure 2

ClibPDF - www.fastio.com

Figure 3

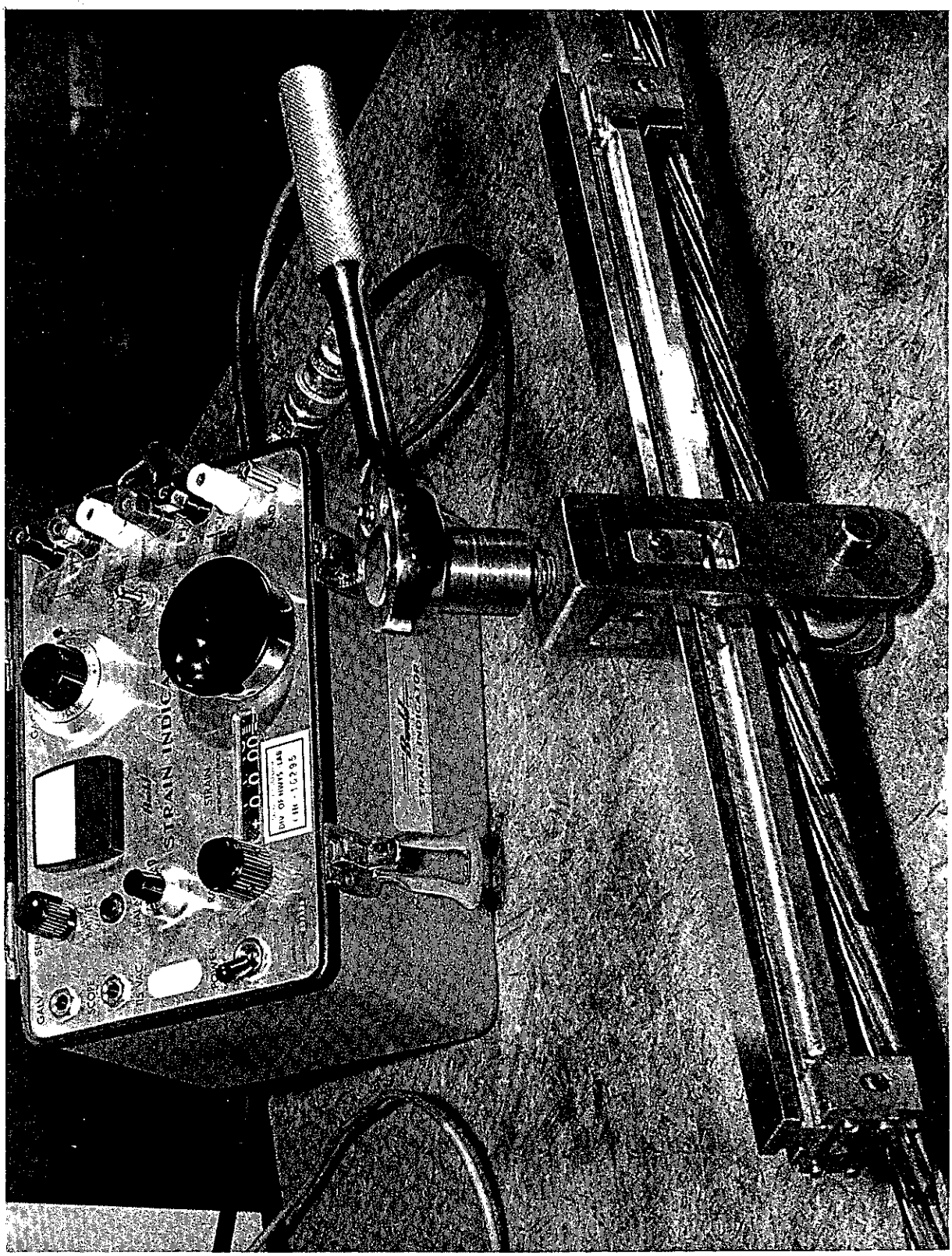

STRAND STRESS BEAM NO. 2 AND BUDD STRAIN INDICATOR

ClibPDF - www.fastio.com

Figure 8

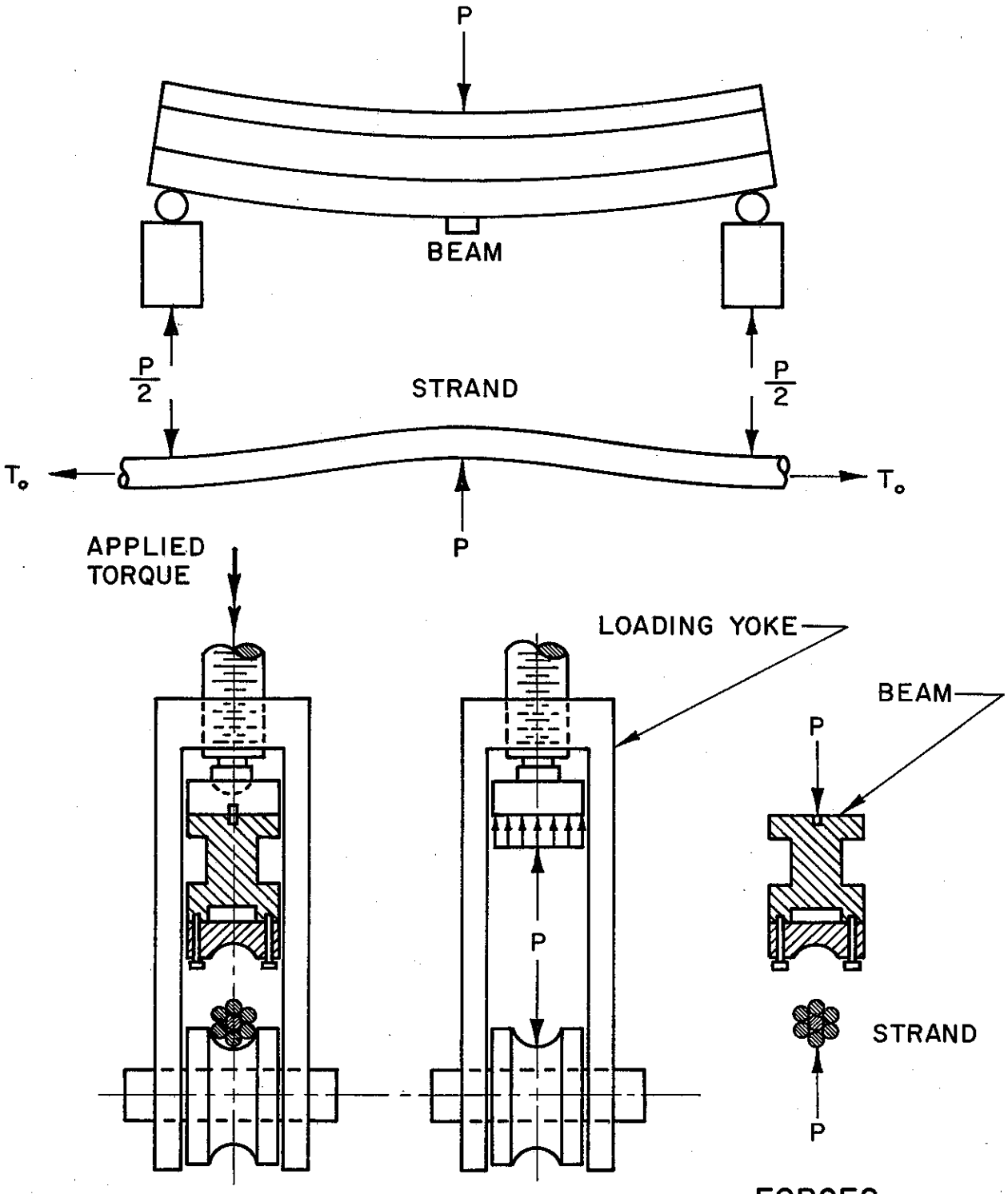

FORCES ON LOADING YOKE, BEAM AND STRAND

ClibPDF - www.fastio.com

Figure 9

STRAND BEAM NO. 1

NEUTRAL AXIS AND MOMENT OF INERTIA
(THEORETICAL CALCULATIONS)

BEAM DIMENSIONS

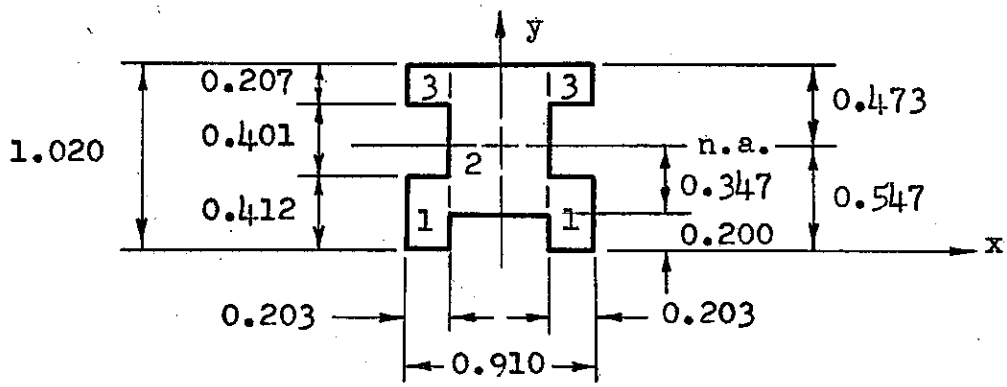

NEUTRAL AXIS

Section	y (in)	A (in^2)	yA (in^3)
1	0.206	0.1672	0.0344
2	0.610	0.4141	0.2526
3	0.917	0.0840	0.0770
		0.6653	0.3640

$Y = 0.547$ in
$A = 0.665$ in^2

MOMENT of INERTIA

Section	I_{cg} (in^4)	A (in^2)	d^2 (in^2)	Ad^2 (in^4)
1	0.00236	0.1672	0.1163	0.01944
2	0.02319	0.4141	0.0040	0.00166
3	0.00030	0.0840	0.2738	0.01150
	0.02585			0.03260

$I = 0.0585$ in^4

ClibPDF - www.fastio.com

Figure 11

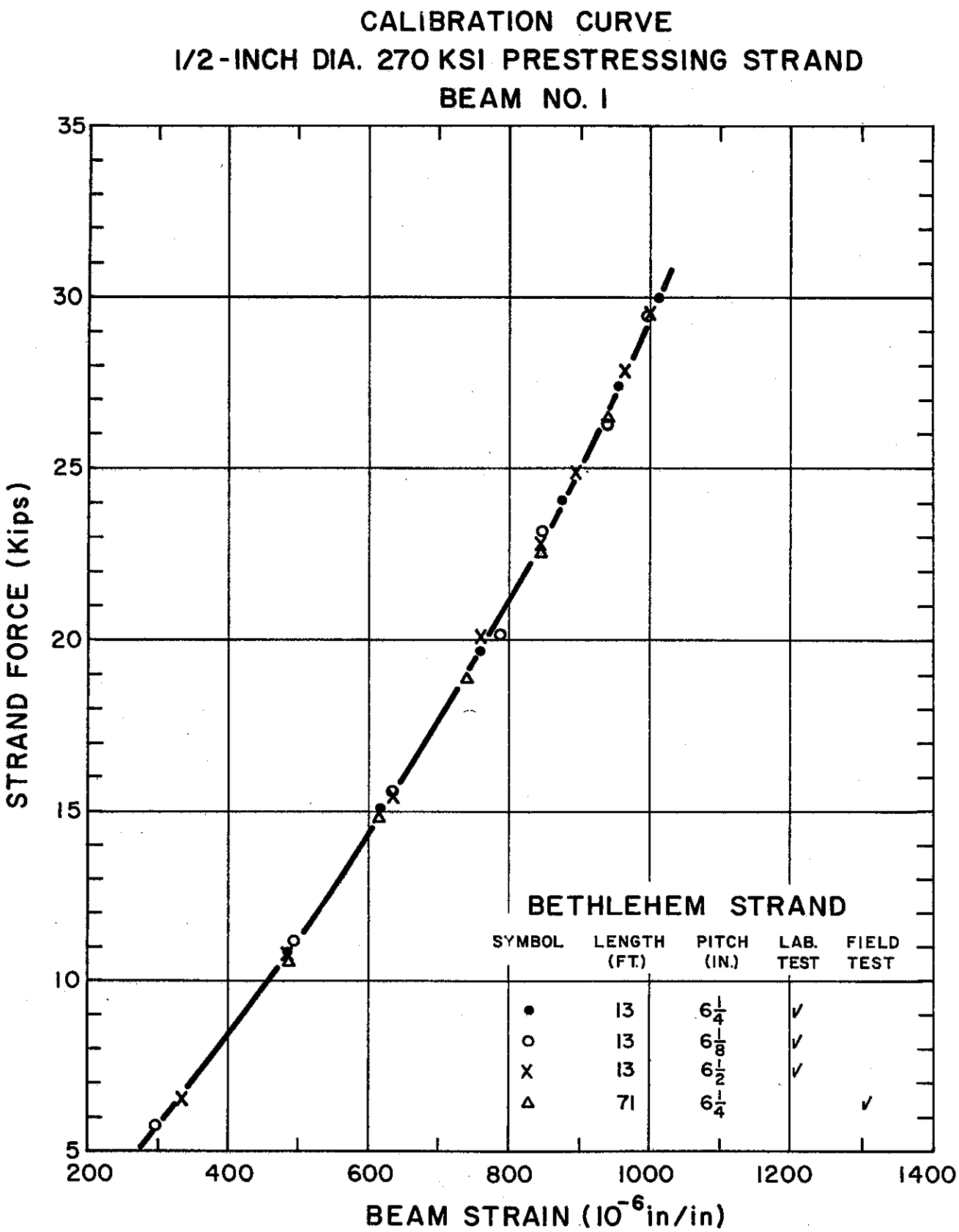
CALIBRATION CURVE
1/2-INCH DIA. 270 KSI PRESTRESSING STRAND
BEAM NO. 1
STRAND FORCE (Kips)
BEAM STRAIN (10^{-6} in/in)
35
30
25
20
15
10
5
200
400
600
800
1000
1200
1400
BETHLEHEM STRAND
SYMBOL
LENGTH (FT.)
PITCH (IN.)
LAB. TEST
FIELD TEST
● 13 $6\frac{1}{4}$ ✓
○ 13 $6\frac{1}{8}$ ✓
X 13 $6\frac{1}{2}$ ✓
△ 71 $6\frac{1}{4}$ ✓

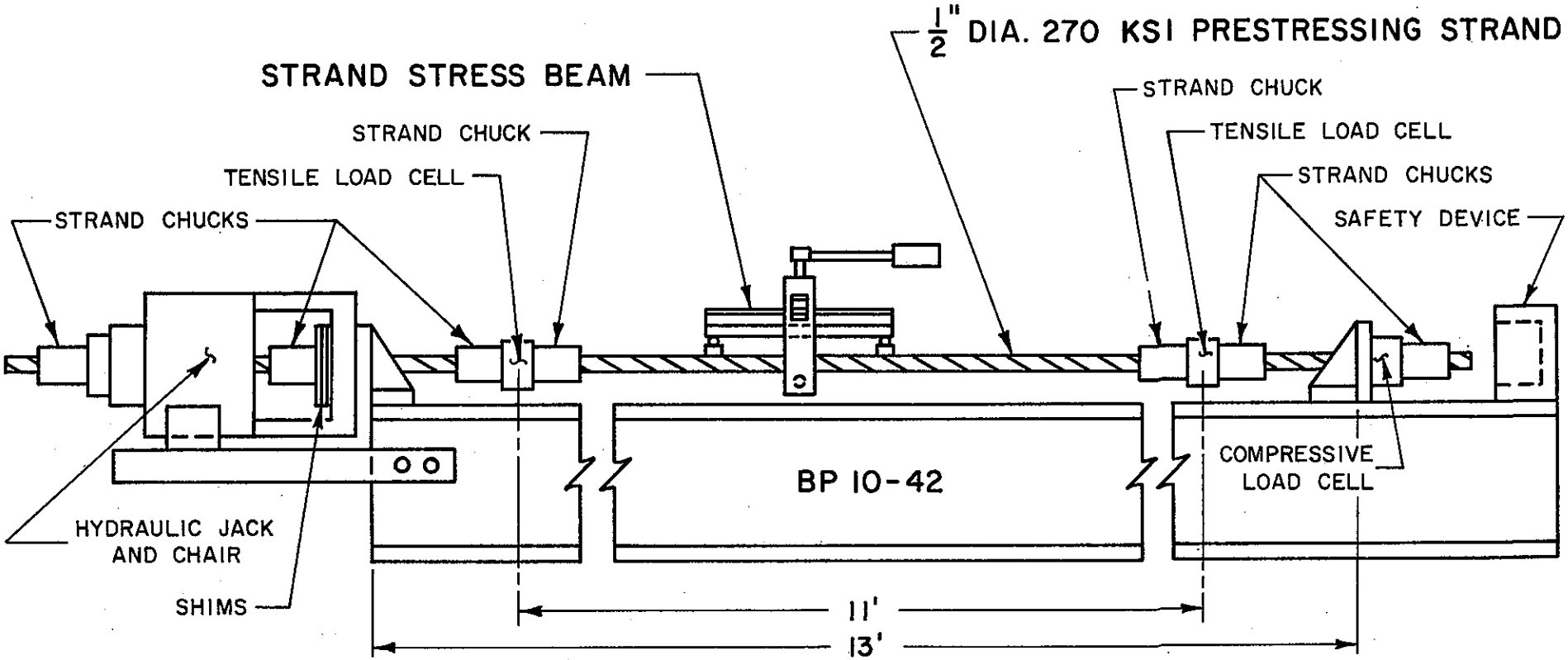

Note: Safety devices along the stand to protect personnal against a strand failure are not shown

Figure 10

LABORATORY TEST SETUP FOR CALIBRATING STRAND STRESS BEAM

NOT TO SCALE

ClibPDF - www.fastio.com

Figure 12

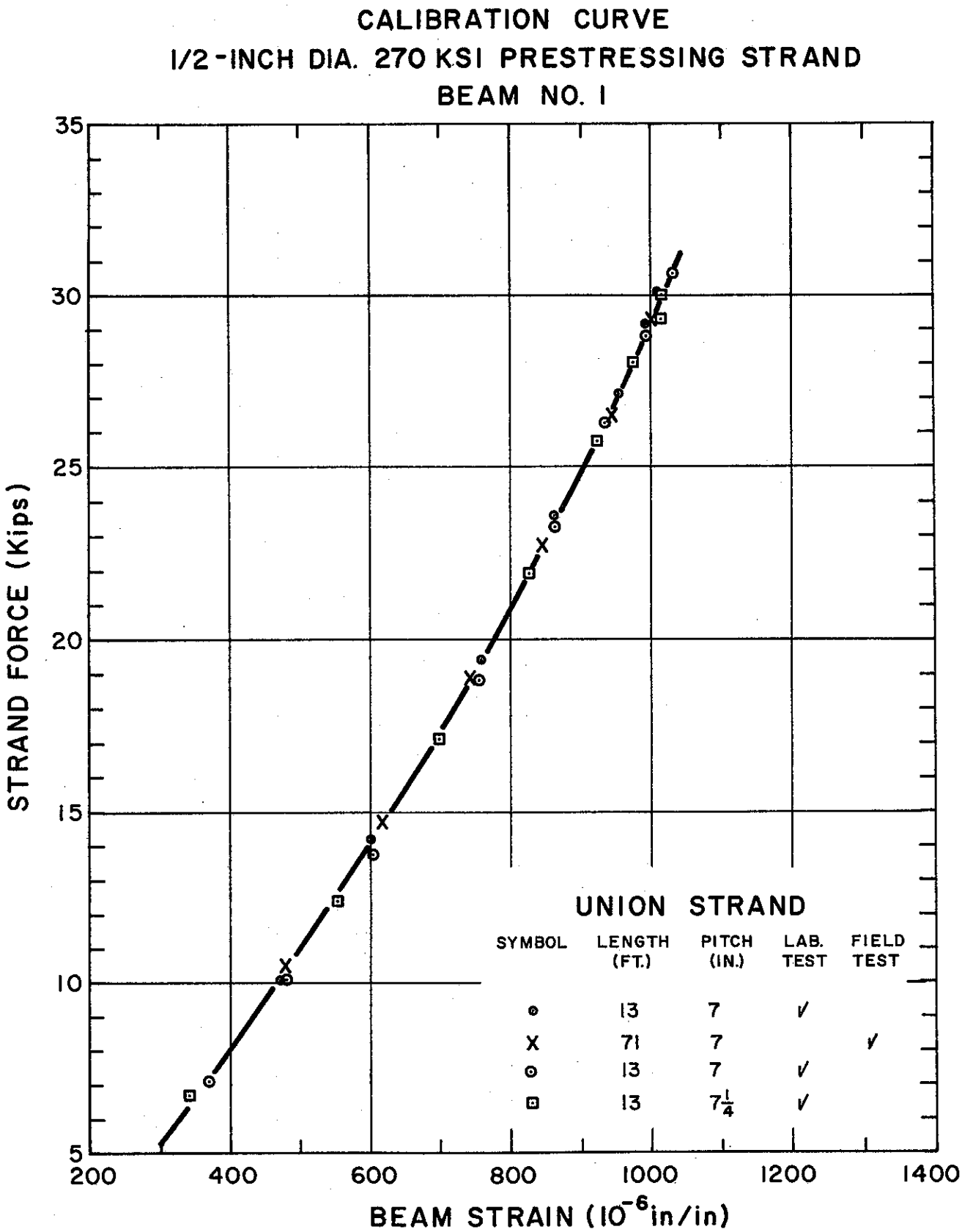

ClibPDF - www.fastio.com

Figure 13

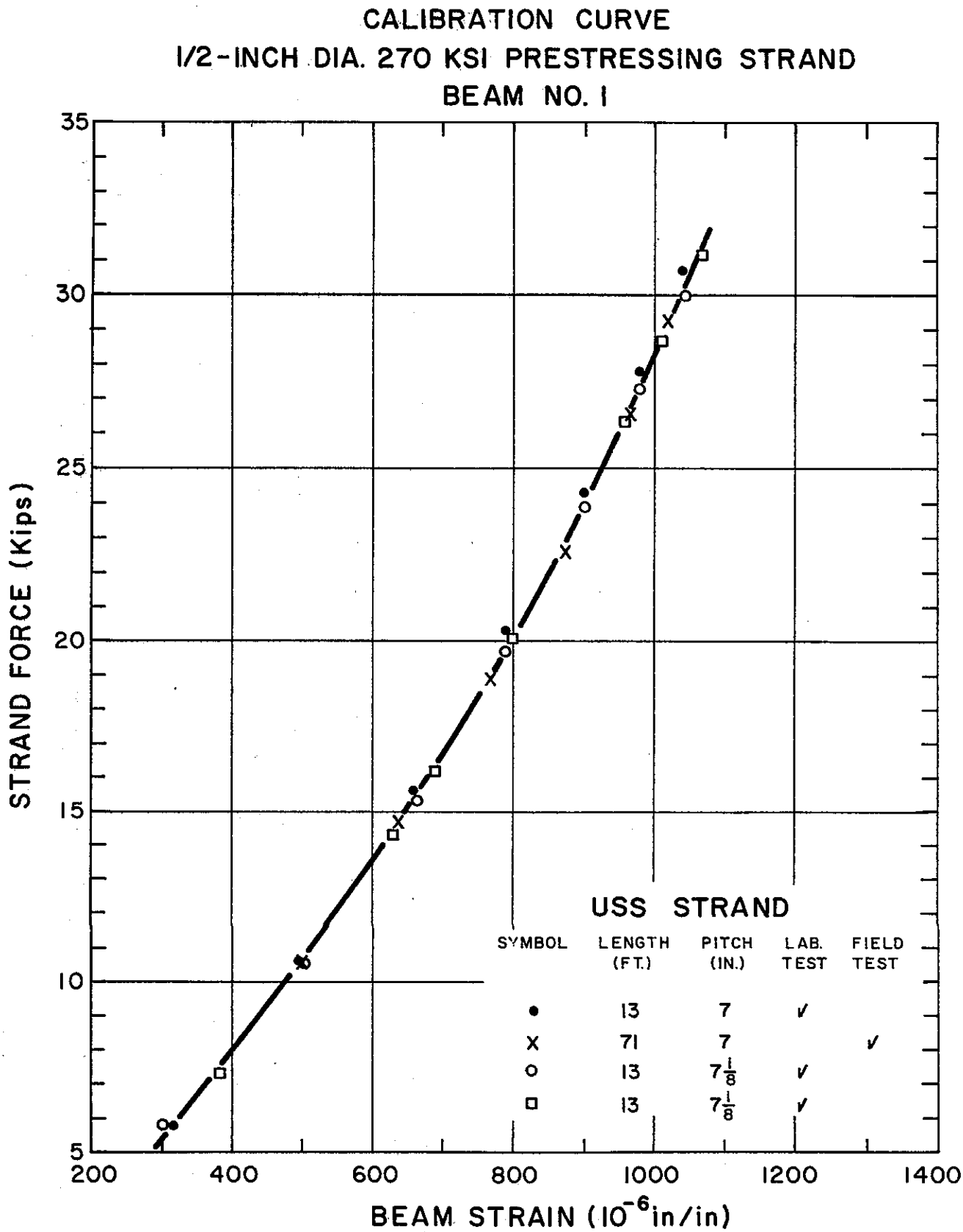

ClibPDF - www.fastio.com

Figure 14

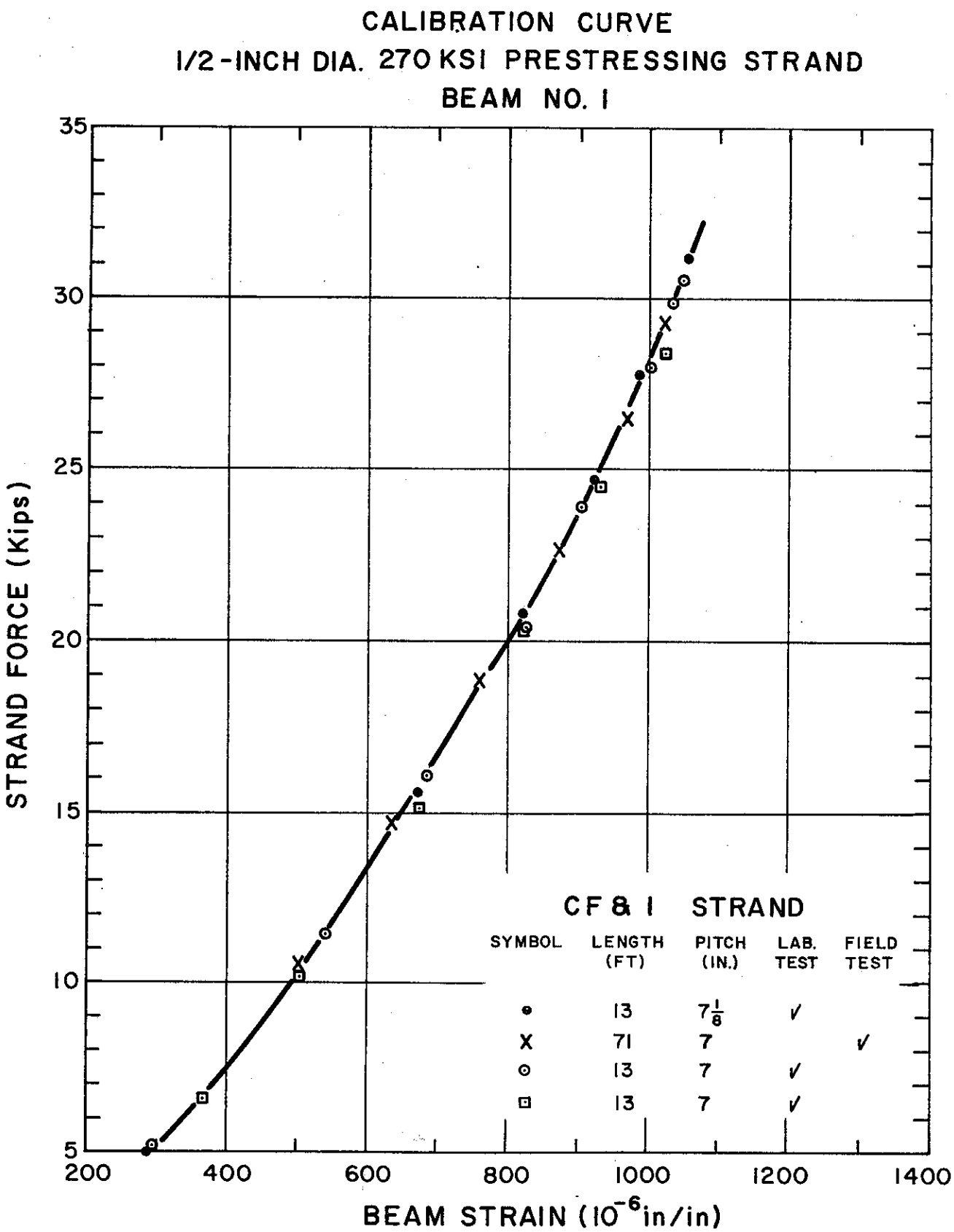

ClibPDF - www.fastio.com

Figure 15

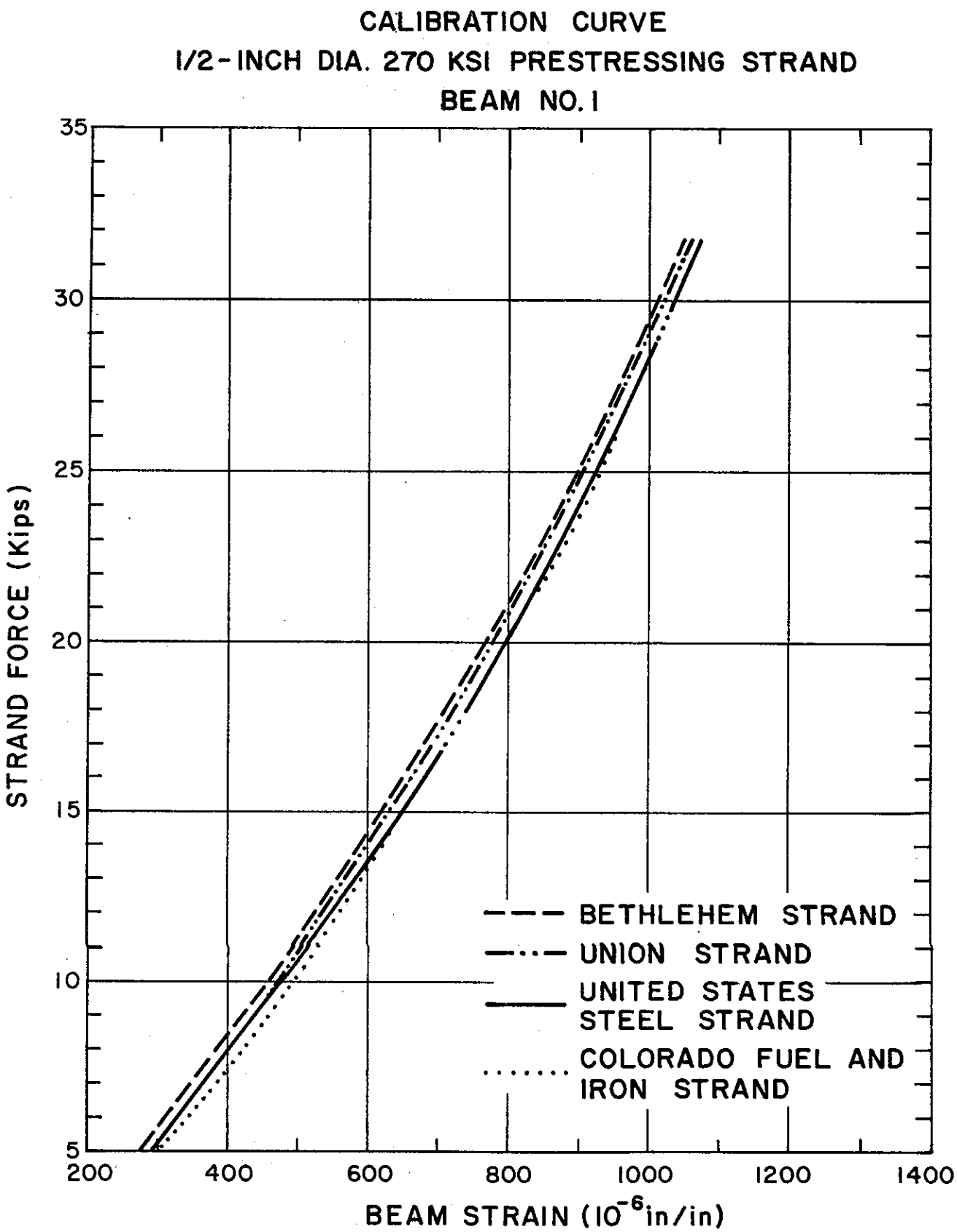

ClibPDF - www.fastio.com

Figure 16

CALIBRATION CURVE
7/16-INCH DIA. 270 KSI PRESTRESSING STRAND
BEAM NO. 1

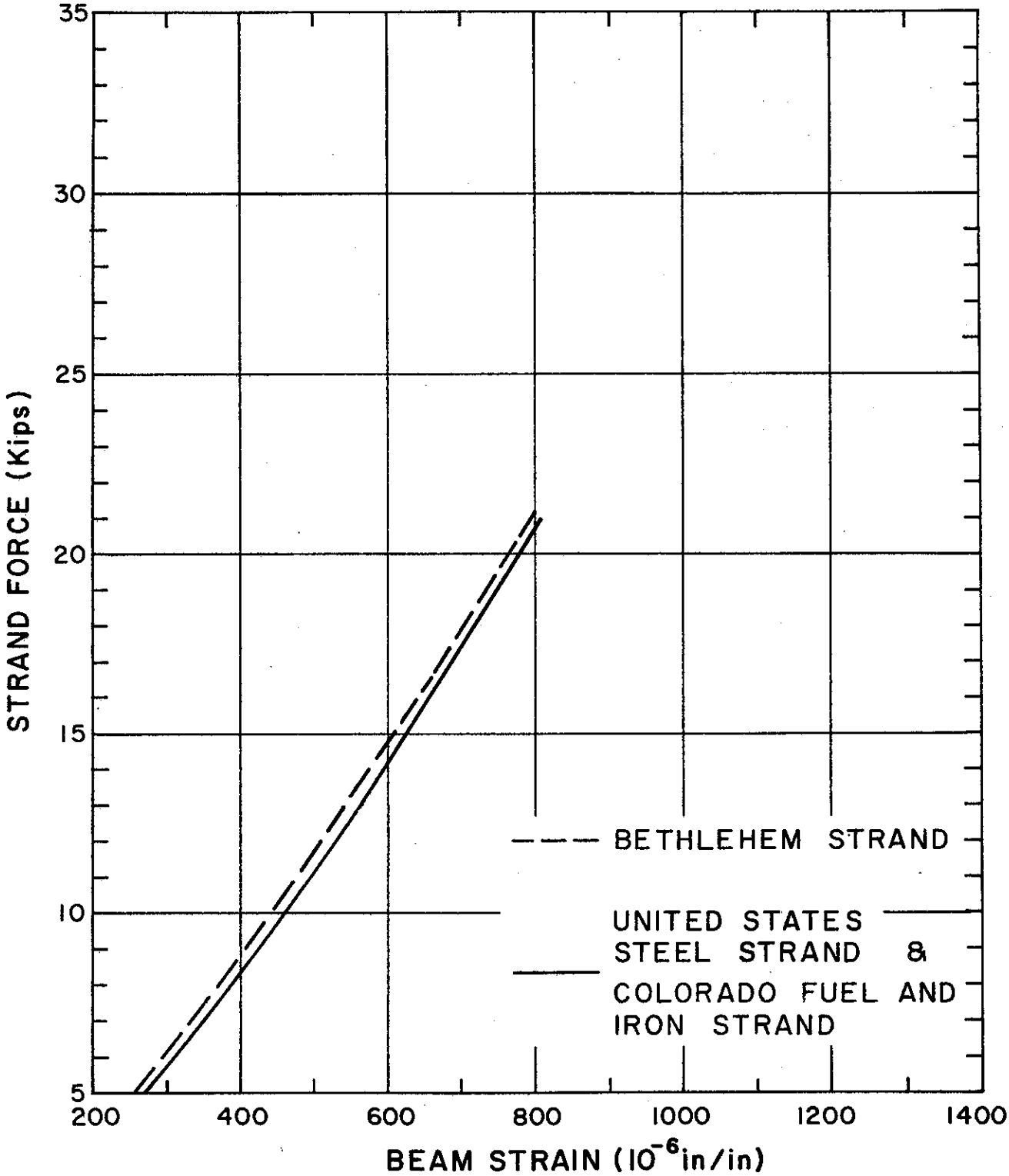

ClibPDF - www.fastio.com

Figure 17

CALIBRATION CURVE
1/2-INCH DIA. 270 KSI PRESTRESSING STRAND
BEAM NO. 1

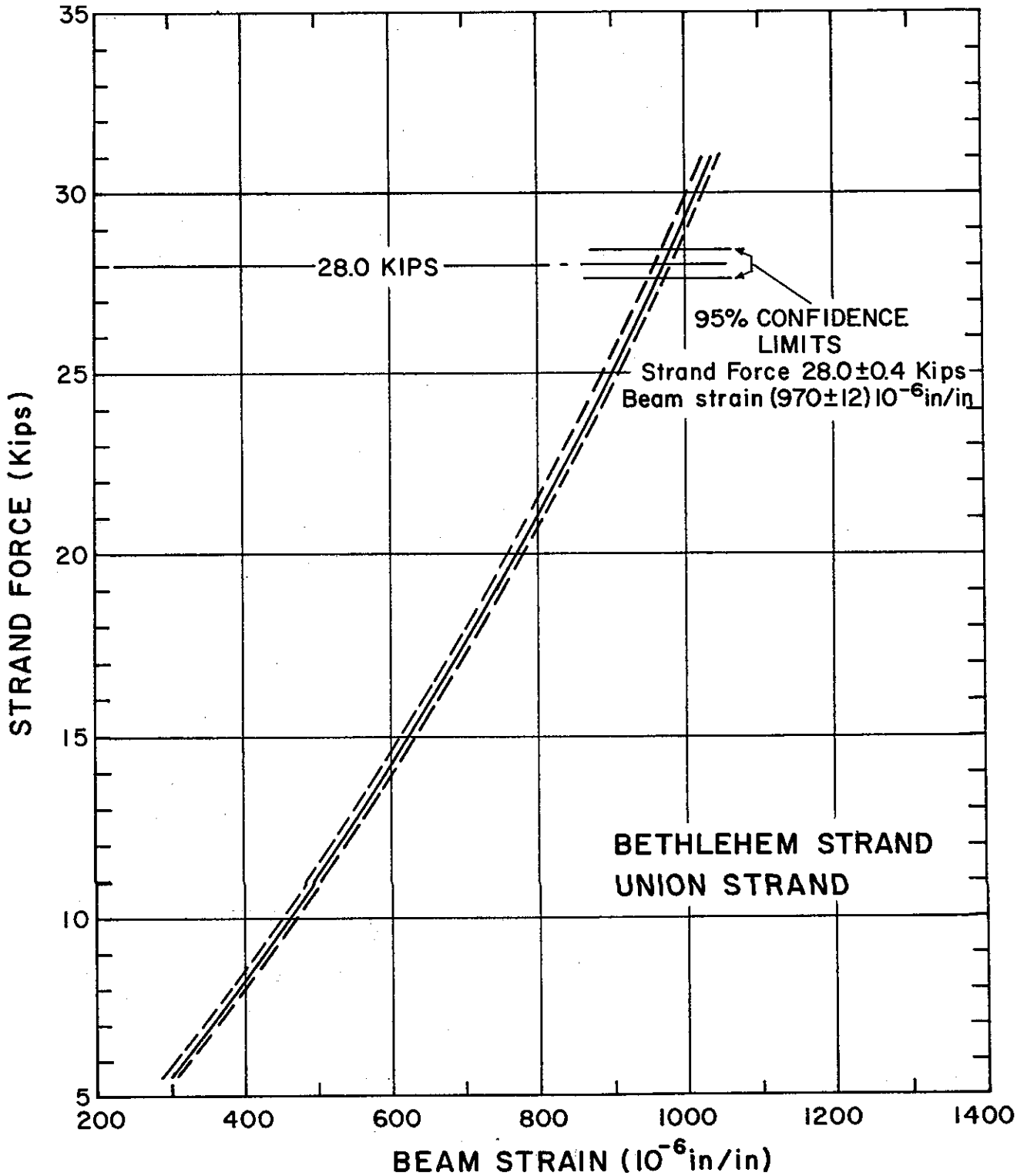

ClibPDF - www.fastio.com

Figure 18

CALIBRATION CURVE
1/2-INCH DIA. 270 KSI PRESTRESSING STRAND
BEAM NO. 1

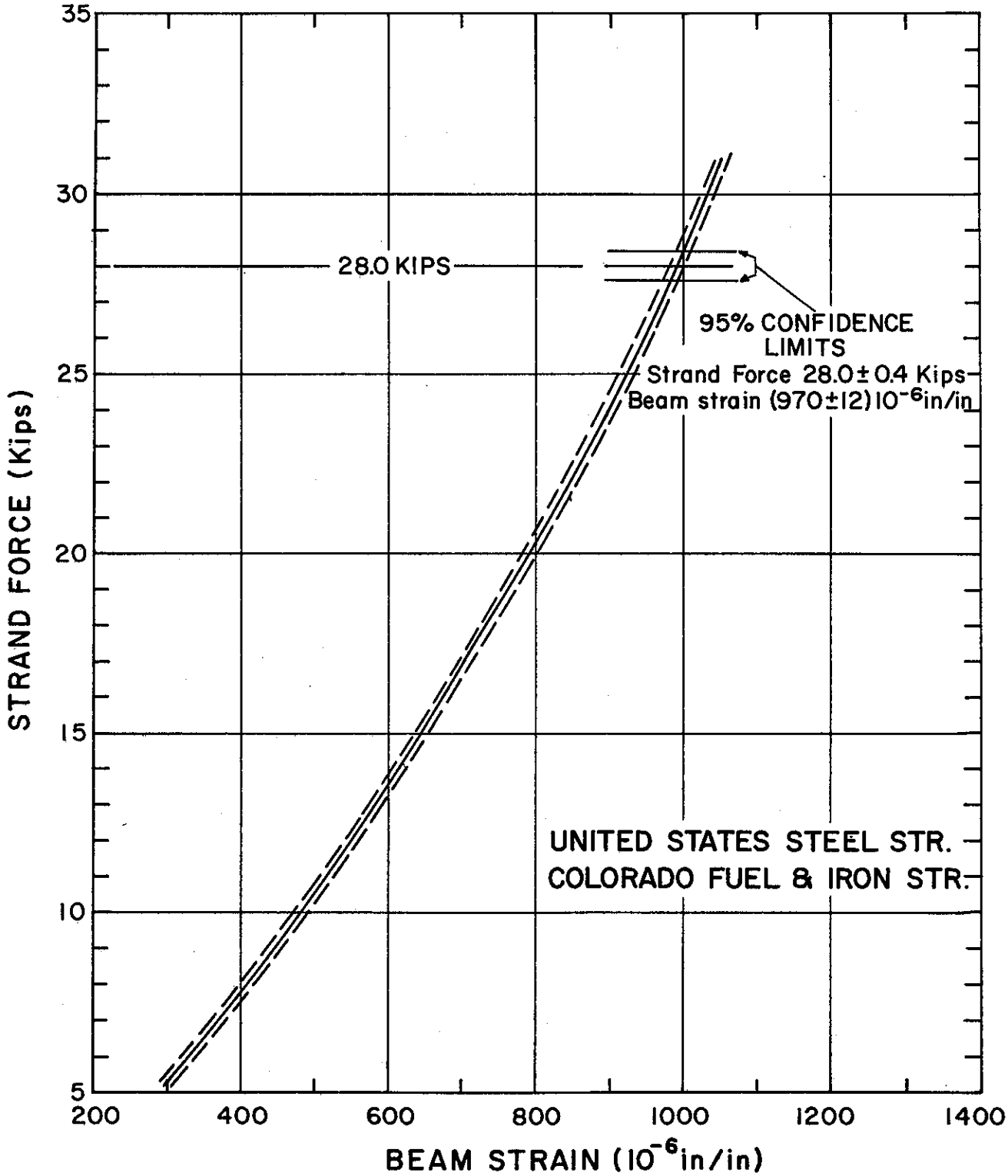

ClibPDF - www.fastio.com

Figure 19

CALIBRATION CURVE
1/2-INCH DIA. 270 KSI PRESTRESSING STRAND
BEAM NO. 1

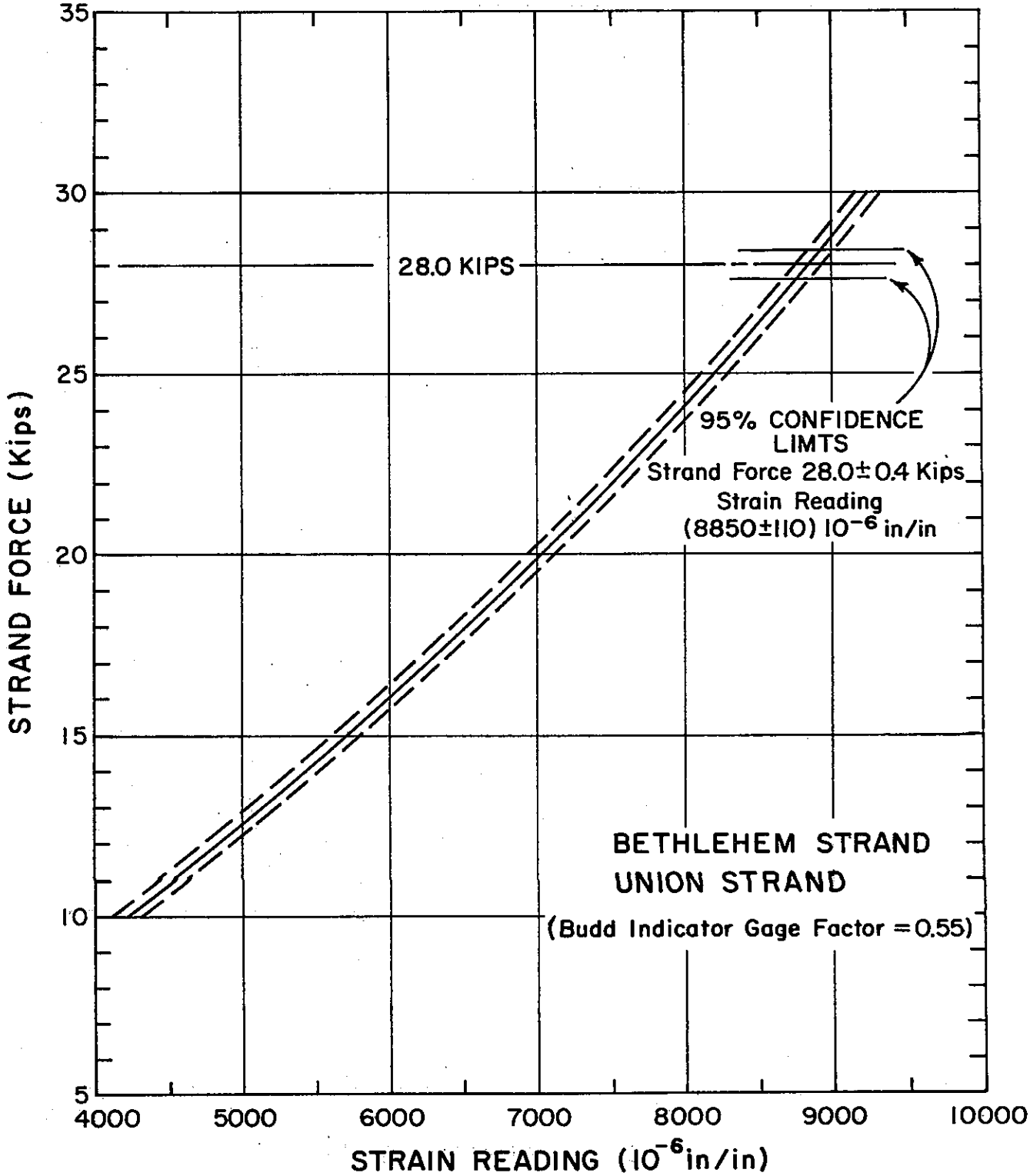

ClibPDF - www.fastio.com

Figure 20

STRAND BEAM NO. 2

NEUTRAL AXIS AND MOMENT OF INERTIA
(THEORETICAL CALCULATIONS)

BEAM DIMENSIONS

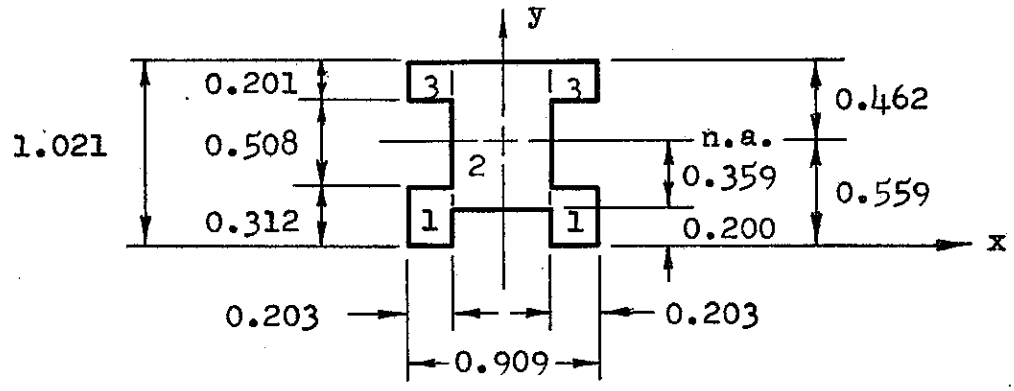

NEUTRAL AXIS

Section	y (in)	A (in^2)	yA (in^3)
1	0.156	0.1266	0.0198
2	0.611	0.4130	0.2523
3	0.921	0.0820	0.0756
		0.6216	0.3477

Y = 0.559 in.
A = 0.622 $in.^2$

MOMENT of INERTIA

Section	I_{cg} (in^4)	A (in^2)	d^2 (in^2)	Ad^2 (in^4)
1	0.00102	0.1266	0.1624	0.02056
2	0.02319	0.4130	0.0027	0.00112
3	0.00028	0.0820	0.1310	0.01074
	0.02449			0.03242

$I = 0.0569\ in^4$

ClibPDF - www.fastio.com

Figure 21

IBM360 FORTRAN FLOW CHART FOR STRAND STRESS BEAM THEORETICAL EQUATIONS

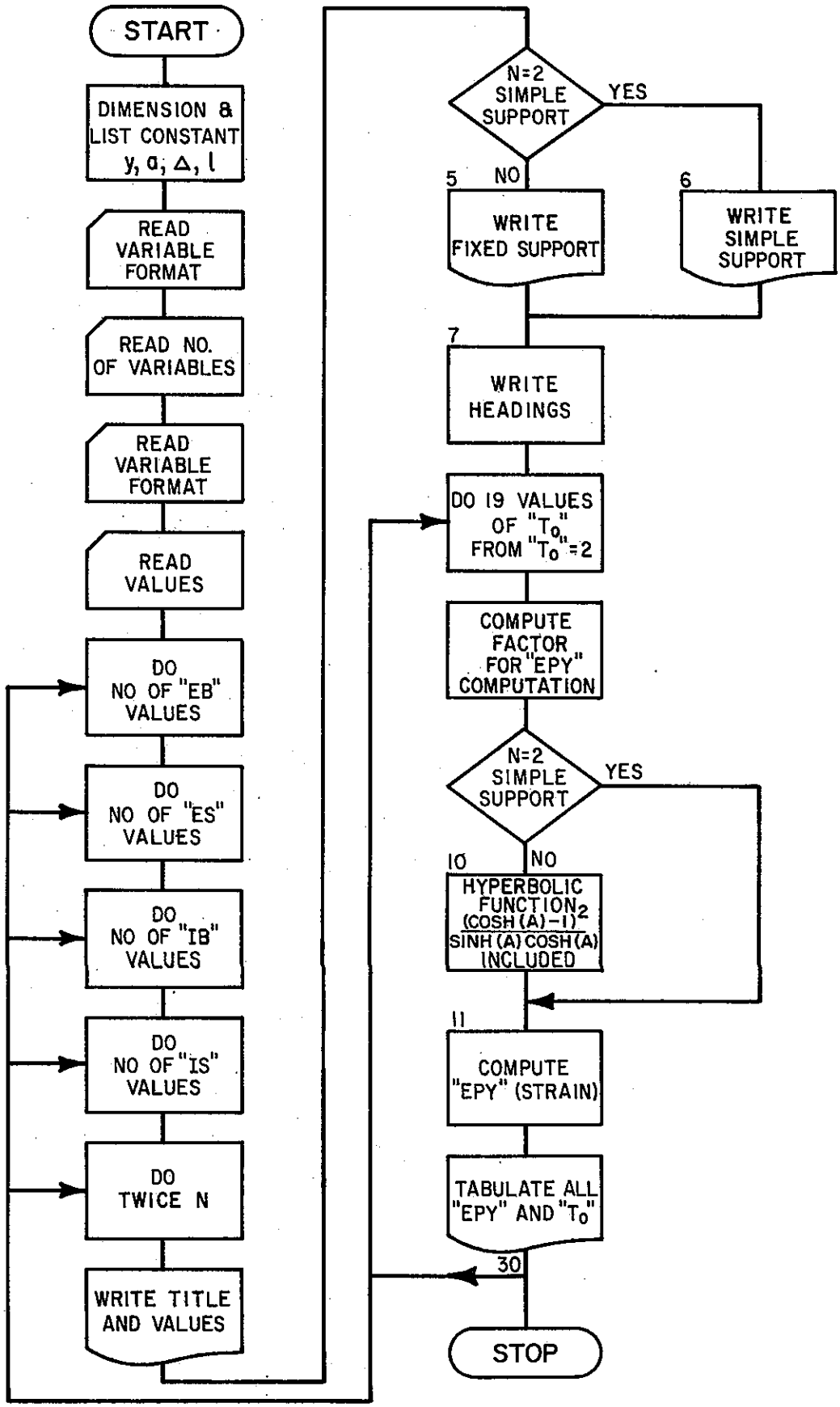

ClibPDF - www.fastio.com

```
C     STRESS BEAM THEORETICAL CALCULATION
      DIMENSION  FMT(2),EB(12),ES(12),FMU(2)
      REAL LT,IB(12),IS(12),HYP
      NCARD=1
      NPNT=6
      Y= .347
      AA=0.140
      DELTA=.200
      LT=16.008
      READ (NCARD,51) FMU
      READ (NCARD,50) NEB,NIB,NES,NIS
      READ (NCARD,51) FMT
      READ (NCARD,FMU) (EB(I),I=1,NEB)
      READ (NCARD,FMT) (IB(I),I=1,NIB)
      READ (NCARD,FMU) (ES(I),I=1,NES)
      READ (NCARD,FMT) (IS(I),I=1,NIS)
      KOUNT=0
      DO 30 J=1,NEB
      DO 30 L=1,NIB
      DO 30 K=1,NES
      DO 30 M=1,NIS
      DO 30 N=1,2
      KOUNT=KOUNT+1
      WRITE(NPNT,52)
      WRITE(NPNT,53) EB(J),IB(L),ES(K),IS(M)
      IF (N-2)5,6,6
    5 WRITE(NPNT,58)
      GO TO 7
    6 WRITE (NPNT,59)
    7 WRITE (NPNT,55)
      TO=0.0
      DO 30 NO=1,19
      TO=TO+2.0
      OK=(TO*10.0**3)/(ES(K)*IS(M))
      PK= SQRT (OK)
      A=PK*LT/2.0
```

Figure 22

ClibPDF - www.fastio.com

```
0036          HYP= A-TANH(A)                                                  39000
0037          IF (N-2) 10,11,11                                               40000
0038       10 HYP=HYP-(((COSH(A)-1.0)**2)/(SINH(A)*COSH(A)))                  41000
0039       11 UPPER=12.0*Y*(LT-2.0*AA)*DELTA                                  42000
0040          FAC=(24.0*EB(J)*IB(L))/(OK*PK*LT**3*ES(K)*IS(M))                43000
0041          EPY=UPPER/(LT**3*(1.0+FAC*HYP))                                 44000
0042          EPY=EPY*10.0**6                                                 44100
0043          WRITE (NPNT,56) TO,EPY,KOUNT                                    45000
0044       30 CONTINUE                                                        47000
0045       50 FORMAT (4I2)                                                    48000
0046       51 FORMAT (2A4)                                                    49000
0047       52 FORMAT (1H1,20X,35HSTRESS BEAM THEORETICAL CALCULATION/18X,41HMATE 50000
             1RIALS AND RESEARCH DEPT. OCTOBER 1967//)                        51000
0048       53 FORMAT ( 9X,14HBEAM MODULUS= ,F9.0,18X,24HBEAM MOMENT OF INERTIA= 52000
             1,F6.5/ 9X,16HSTRAND MODULUS= ,F9.0,16X,26HSTRAND MOMENT OF INERTIA 53000
             1= ,F6.5//)                                                      54000
0049       55 FORMAT (15X19HSTRAND FORCE (KIPS),9X,25HBEAM STRAIN (MICROINCHES)) 56000
0050       56 FORMAT (23X,F3.0,25X,F8.2,20XI4)                                57000
0051       58 FORMAT (15X44HCOMPUTED WITH STRAND FIXED AT BEARING POINTS///)  59000
0052       59 FORMAT (15X55HCOMPUTED WITH STRAND SIMPLY SUPPORTED AT BEARING POI 60000
             1NTS///)                                                         61000
0053          STOP
0054          END
```

Figure 22 (Continued)

ClibPDF - www.fastio.com

Figure 23

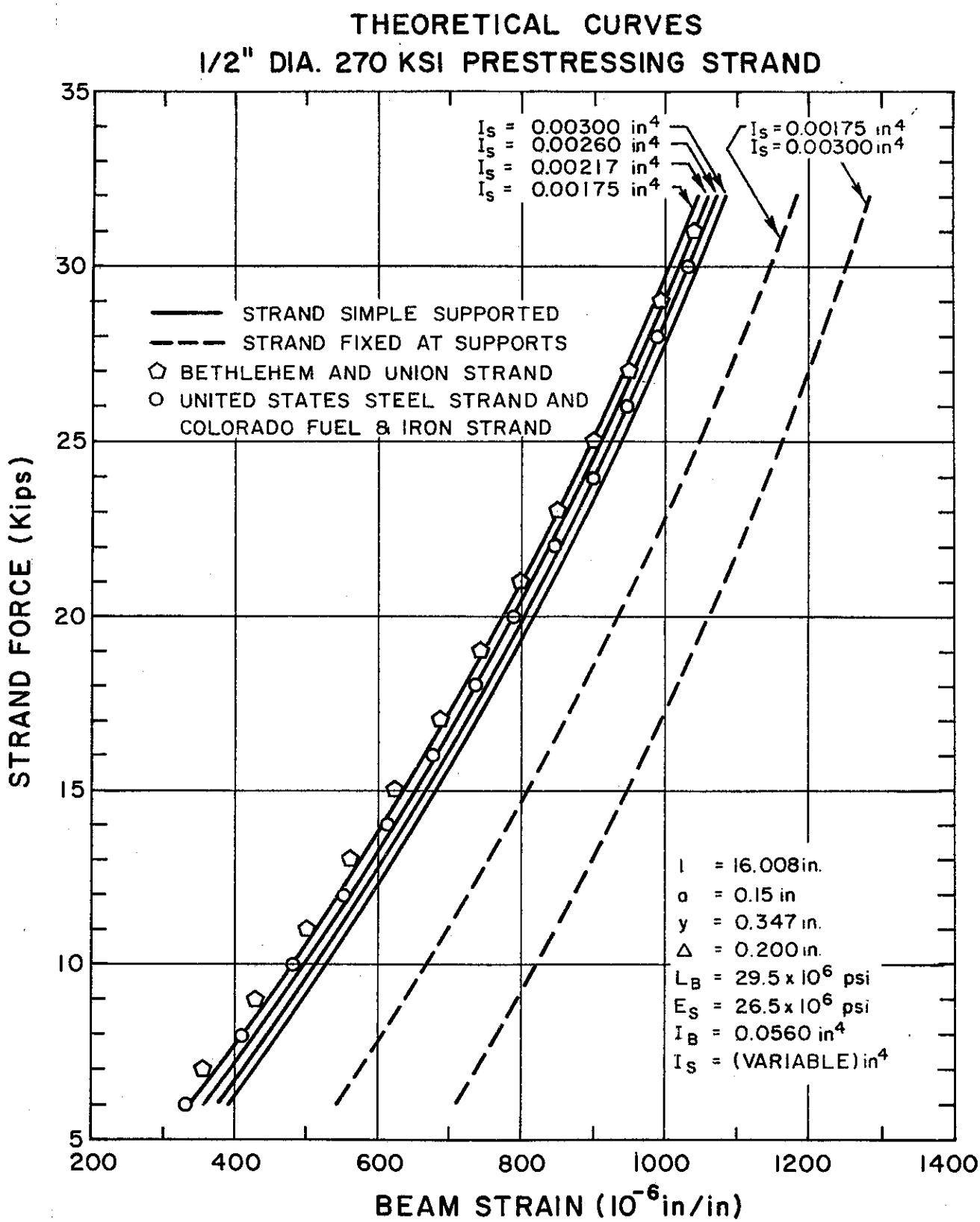

ClibPDF - www.fastio.com

Figure 24

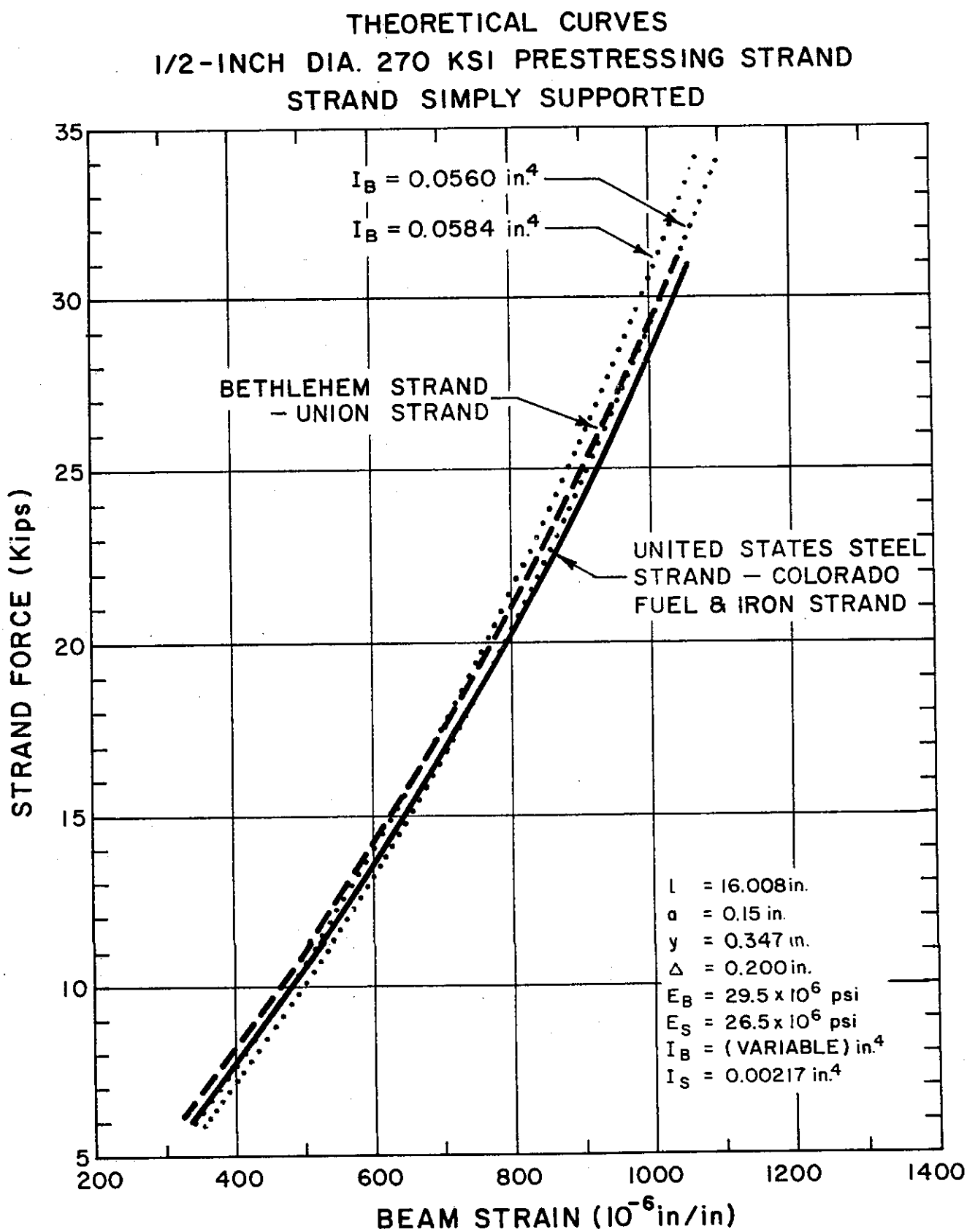

ClibPDF - www.fastio.com

Figure 25

CORRELATION OF CALIBRATED AND THEORETICAL CURVES 1/2 INCH DIA. 270 KSI PRESTRESSING STRAND BEAM NO. 1

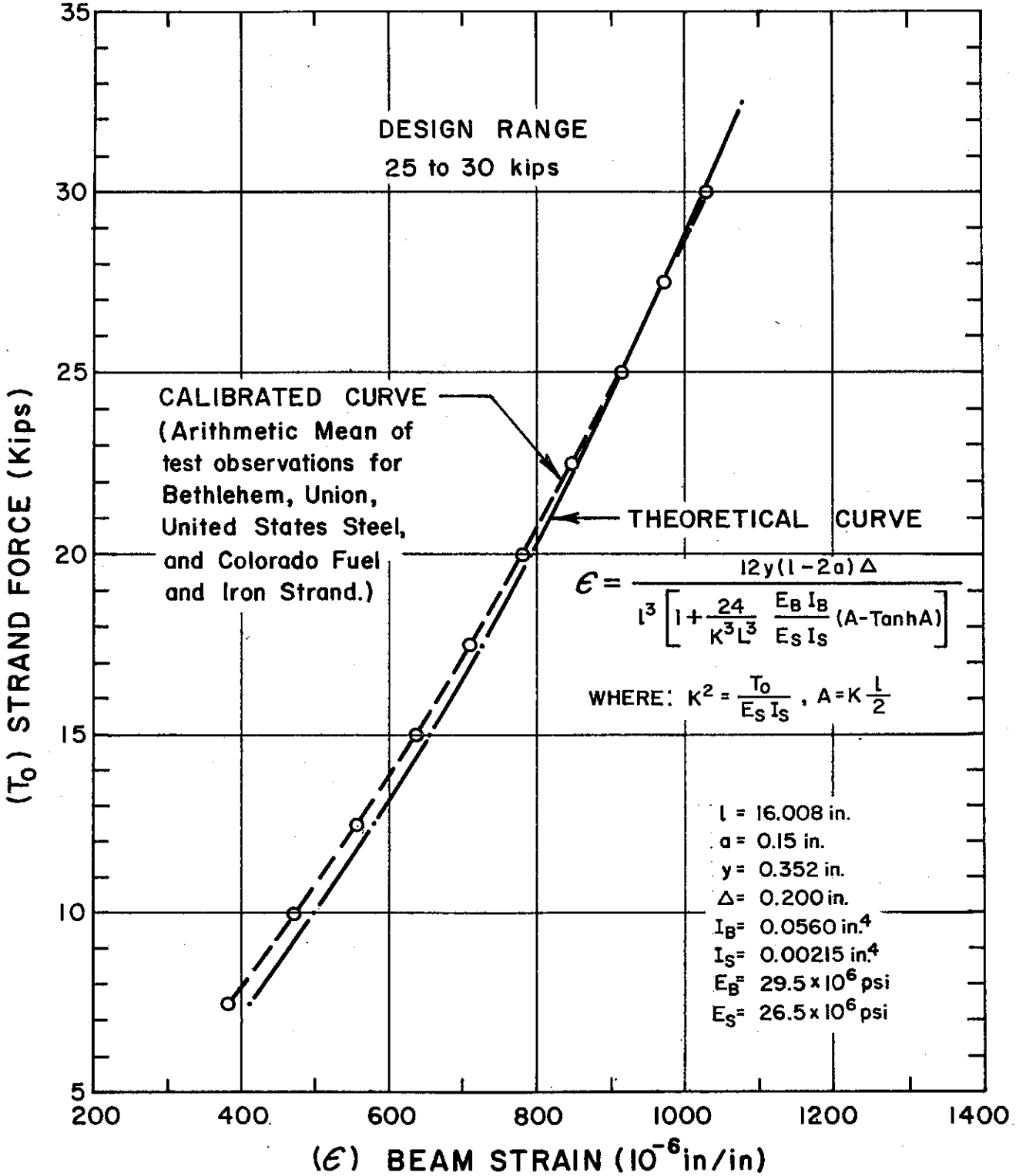

ClibPDF - www.fastio.com

Figure 26

CORRELATION OF CALIBRATED AND THEORETICAL CURVES 7/16 INCH DIA. 270 KSI PRESTRESSING STRAND BEAM NO. 1

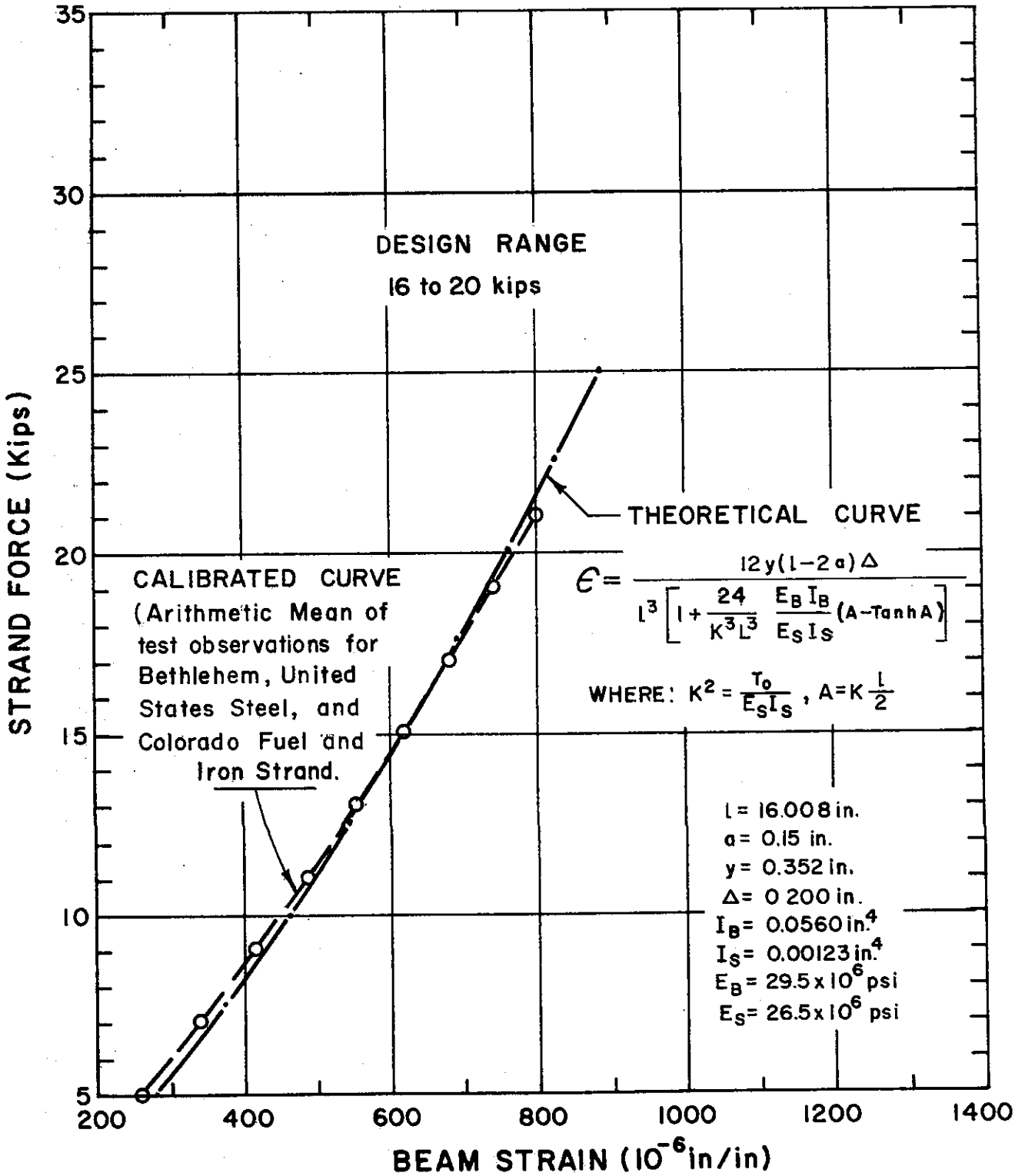

ClibPDF - www.fastio.com

TABLE 1

LABORATORY AND FIELD CALIBRATION DATA FOR BEAM NO.1
1/2" DIA. 270 KSI PRESTRESSING STRAND

USS STRAND

Laboratory Test •

Strand Lgth 13' Lay Lgth 7"

Strand Force (kips)	Strain Reading (10^{-6} in/in) GF=0.55	Beam
5.8	2839	312
10.6	4486	493
15.6	5951	654
20.3	7153	786
24.3	8172	898
27.8	8863	974
30.7	9455	1039

Laboratory Test ○

Strand Lgth 13' Lay Lgth 7-1/8"

Strand Force (kips)	Strain Reading (10^{-6} in/in) GF=0.55	Beam
5.4	2712	298
10.5	4565	502
15.3	6027	662
19.7	7178	789
23.9	8192	900
27.3	8896	978
30.0	9484	1042

Laboratory Test □

Strand Lgth 13' Lay Lgth 7-1/8"

Strand Force (kips)	Strain Reading (10^{-6} in/in) GF=0.55	Beam
7.3	3463	381
14.2	5720	629
14.2	5697	626
16.2	6265	689
20.1	7251	797
23.8	8102	890
26.4	8688	955
28.7	9183	1009
31.2	9699	1066

Field Test X

Strand Lgth 71' Lay Lgth 7"

Strand Force (kips)	Strain Reading (10^{-6} in/in) GF=0.55	Beam
10.6	4534	498
14.7	5777	635
19.0	6940	763
22.6	7921	871
26.5	8777	964
29.3	9276	1019

ClibPDF - www.fastio.com

TABLE 1

LABORATORY AND FIELD CALIBRATION DATA FOR BEAM NO.1
1/2" DIA. 270 KSI PRESTRESSING STRAND

BETHLEHEM STRAND

Laboratory Test •

Strand Lgth 13' Lay Lgth 6-1/4"

Strand Force (kips)	Strain Reading (10^{-6} in/in) GF=0.55	Beam
4.6	2321	255
10.9	4432	487
15.1	5633	619
19.7	6919	760
24.1	7963	875
27.4	8681	954
30.0	9218	1013

Laboratory Test ⊙

Strand Lgth 13' Lay Lgth 6-1/8"

Strand Force (kips)	Strain Reading (10^{-6} in/in) GF=0.55	Beam
5.8	2694	296
11.2	4495	494
15.6	5769	634
20.2	7189	790
23.2	7708	847
26.3	8563	941
29.5	8991	988

Laboratory Test X

Strand Lgth 13' Lay Lgth 6-1/2"

Strand Force (kips)	Strain Reading (10^{-6} in/in) GF=0.55	Beam
6.6	3060	336
10.8	4429	486
15.4	5815	638
20.1	6923	760
24.9	8131	893
27.9	8768	963
29.6	9098	1000
22.8	7704	847

Field Test Δ

Strand Lgth 71' Lay Lgth 6-1/4"

Strand Force (kips)	Strain Reading (10^{-6} in/in) GF=0.55	Beam
10.5	4433	487
14.8	5636	619
18.9	6773	744
22.6	7703	847
26.5	8571	942
29.3	8993	988

ClibPDF - www.fastio.com

TABLE 1

LABORATORY AND FIELD CALIBRATION DATA FOR BEAM NO.1
1/2" DIA. 270 KSI PRESTRESSING STRAND

UNION STRAND

Laboratory Test •

Strand Lgth 13' Lay Lgth 7"

Strand Force (kips)	Strain Reading (10^{-6}in/in) GF=0.55	Beam
4.5	2366	260
10.1	4277	470
14.2	5460	600
19.4	6907	759
23.6	7853	863
27.1	8700	956
29.1	9037	993
30.1	9194	1010

Laboratory Test ○

Strand Lgth 13' Lay Lgth 7"

Strand Force (kips)	Strain Reading (10^{-6}in/in) GF=0.55	Beam
7.1	3355	369
10.1	4370	480
13.7	5488	603
18.8	6876	756
23.2	7870	865
26.3	8506	935
28.8	9064	996
30.7	9414	1035

Laboratory Test □

Strand Lgth 13' Lay Lgth 7½"

Strand Force (kips)	Strain Reading (10^{-6}in/in) GF=0.55	Beam
6.7	3115	342
12.4	5033	553
17.1	6356	699
21.9	7533	828
25.7	8400	923
28.0	8876	975
29.9	9250	1017
29.7	9273	1019

Field Test X

Strand Lgth 71' Lay Lgth 7"

Strand Force (kips)	Strain Reading (10^{-6}in/in) GF=0.55	Beam
10.5	4422	480
14.7	5641	620
18.9	6767	744
22.7	7627	845
26.4	8603	945
29.3	9096	1000

ClibPDF - www.fastio.com

TABLE 1

LABORATORY AND FIELD CALIBRATION DATA FOR BEAM NO.1
1/2" DIA. 270 KSI PRESTRESSING STRAND

CF&I STRAND

Laboratory Test •

Strand Lgth 13' Lay Lgth 7-1/8"

Strand Force (kips)	Strain Reading (10^{-6} in/in) GF=0.55	Beam
5.0	2630	289
10.5	4614	507
15.6	6124	673
20.8	7471	821
24.7	8399	923
27.7	8991	988
31.2	9619	1057
26.6	8800	967

Laboratory Test □

Strand Lgth 13' Lay Lgth 7"

Strand Force (kips)	Strain Reading (10^{-6} in/in) GF=0.55	Beam
6.6	3362	369
10.2	4594	505
15.1	6149	676
20.3	7529	827
24.5	8470	931
28.4	9337	1026

Laboratory Test ○

Strand Lgth 13' Lay Lgth 7"

Strand Force (kips)	Strain Reading (10^{-6} in/in) GF=0.55	Beam
5.2	2662	293
11.4	4923	541
16.1	6252	687
20.4	7528	827
23.9	8230	904
28.0	9194	1005
30.6	9551	1050
29.9	9427	1036

Field Test X

Strand Lgth 71' Lay Lgth 7"

Strand Force (kips)	Strain Reading (10^{-6} in/in) GF=0.55	Beam
10.6	4599	505
14.7	5802	638
18.9	6918	760
22.7	7959	875
26.4	8836	971
29.3	9319	1024

ClibPDF - www.fastio.com

TABLE 2

MOMENT OF INERTIA
1/2 INCH DIAMETER 270 KSI PRESTRESSING STRAND
(THEORETICAL)

Manufacturer	d_i (in)	d_o (in)	I_{11} (10^{-5} in^4)	I_{22}
Beth.	0.1717	0.1667	217	205
	0.1722	0.1667	215	205
Union	0.1710	0.1658	210	201
	0.1713	0.1656	210	200
USS	0.1732	0.1657	214	203
	0.1737	0.1657	214	204
CF&I	0.1732	0.1675	219	207
	0.1728	0.1661	218	205

d_i is an average of 12 measurements (2 per wire)

d_o is an average of 2 measurements

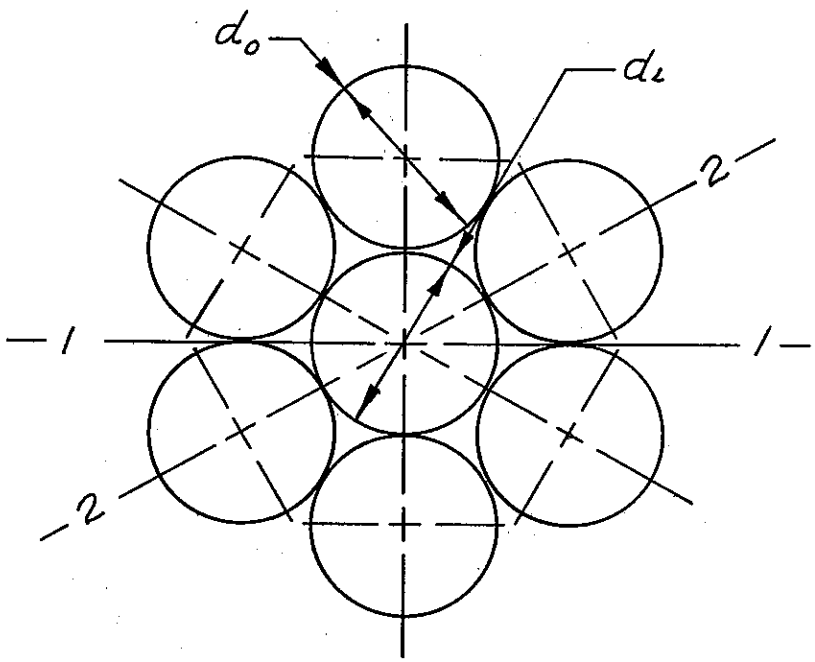

ClibPDF - www.fastio.com

TABLE 3

BEAM (NO. 1) TEST ON HARPED

1/2" DIA. 270 KSI PRESTRESSING STRAND

BETHLEHEM STRAND

STRAND FORCE 27.4 KIPS
STRAND ANGLE 4°

Distance From Harping Point (ft)	Strain Reading (GF = 0.55) (10^{-6} in/in)
1	8710
	8730
	8720
	8730
	8810
	8740
2	8700
	8720
	8650
	8690
	8680
	8688
3	8720
	8810
	8810
	8810
	8750
	8780
4	8720
	8700
	8720
	8690
	8690
	8704

ClibPDF - www.fastio.com

TABLE 4

LABORATORY CALIBRATION DATA FOR BEAM NO. 1
7/16" DIA. 270 KSI PRESTRESSING STRAND

C.F.& I. STRAND

Strand Force (kips)	Strain Reading (10^{-6} in/in) GF=0.55	Beam
5.2	2513	276
8.0	3513	386
10.2	4306	473
12.8	5087	559
15.5	5850	643
18.2	6635	729
20.5	7263	798

C.F.& I. STRAND

Strand Force (kips	Strain Reading (10^{-6} in/in) GF=0.55	Beam
5.5	2597	285
10.3	4253	467
12.7	5008	550
15.3	5770	634
18.8	6728	739
21.5	7313	804

C.F.& I. STRAND

Strand Force (kips)	Strain Reading (10^{-6} in/in) GF=0.55	Beam
5.6	2691	296
7.6	3433	377
10.4	4318	475
12.7	5140	565
15.4	5931	652
18.8	6735	740
20.5	7233	795

U.S.S. STRAND

Strand Force (kips)	Strain Reading (10^{-6} in/in) GF=0.55	Beam
5.5	2701	297
10.2	4331	476
12.7	5100	560
15.1	5860	644
17.1	6360	699
18.8	6838	751
20.8	7337	806

ClibPDF - www.fastio.com

TABLE 4

LABORATORY CALIBRATION DATA FOR BEAM NO. 1
7/16" DIA. 270 KSI PRESTRESSING STRAND

BETHLEHEM STRAND

Strand Force (kips)	Strain Reading (10^{-6} in/in) GF=0.55	Beam
5.3	2465	271
7.6	3200	352
10.0	4064	447
12.9	4890	537
15.9	5846	642
18.8	6610	726
20.9	7235	795

BETHLEHEM STRAND

Strand Force (kips)	Strain Reading (10^{-6} in/in) GF=0.55	Beam
5.1	2335	257
7.4	3164	348
10.4	4180	459
12.9	4960	545
14.8	5541	609
17.4	6285	691
20.3	7023	772

ClibPDF - www.fastio.com

TABLE 5

STATISTICAL STUDY

1/2" DIA. 270 KSI PRESTRESSING STRAND

Strand Manufacturer	Strand Force (kips)	Standard Deviation (10^{-6} in/in)			
		Testing Error		Sampling Error	
		Beam No. 1	Beam No. 2	Beam No. 1	Beam No. 2
USS	22.8	1.8	1.9	17.3	17.3
USS	29.5	1.8	1.8	15.4	16.5
USS	30.1	1.8	---	6.2	---
BETH.	26.5	1.9	2.0	7.7	6.4
CF&I	24.9	2.0	2.1	8.7	10.6
CF&I	29.9	1.8	1.9	5.9	4.3
UNION	22.2	1.2	---	3.7	---
UNION	29.2	1.5	---	14.3	---
UNION	29.4	1.9	---	4.6	---

ClibPDF - www.fastio.com

TABLE 6

STATISTICAL ANALYSIS OF BEAM 1

$\frac{1}{2}$" DIA 270 KSI STRAND FORCE 22.8 KIPS

STRAND MANUFACTURER USS

Yi	$(Yi-\bar{Y}s)^2$	$(\bar{Y}s-\bar{Y}b)^2$	Yi	$(Yi-\bar{Y}s)^2$	$(\bar{Y}s-\bar{Y}b)^2$
849	4		867	4	
849	4		872	9	
846	1		871	4	
845	4		869	0	
844	9	0	867	4	484
850	1		855	4	
849	4		852	1	
849	4		853	0	
851	0		853	0	
856	25	16	854	1	36
847	0		871	0	
846	1		871	0	
845	4		869	4	
847	0		872	1	
848	1	0	871	0	576
818	4		845	4	
820	0		843	0	
822	4		843	0	
821	1		844	1	
821	1	729	729	1	16
848	1		819	1	
848	1		819	1	
846	1		820	4	
846	1		817	1	
845	4	0	817	1	841
				$\sum 126$	$\sum 2698$

$$\sigma_{BEAM} = \sqrt{\frac{\sum (Yi-\bar{Y}s)^2}{40}} = \pm 1.8 \quad X\,10^{-6} \text{ in/in}$$

$$\sigma_{SAMPLE} = \sqrt{\frac{\sigma}{5}_{BEAM} + \frac{\sum (\bar{Y}s-\bar{Y}b)^2}{9}} = \pm 17.3 \quad X\,10^{-6} \text{ in/in}$$

ClibPDF - www.fastio.com

TABLE 6

STATISTICAL ANALYSIS OF BEAM 1

½" DIA 270 KSI STRAND FORCE 29.5 KIPS

STRAND MANUFACTURER USS

Yi	$(Yi-\bar{Y}s)^2$	$(\bar{Y}s-\bar{Y}b)^2$	Yi	$(Yi-\bar{Y}s)^2$	$(\bar{Y}s-\bar{Y}b)^2$
1000	1		981	1	
1000	1		980	0	
1000	1		978	4	
999	0		980	0	
998	1	0	980	0	361
1010	1		1008	1	
1010	1		1009	4	
1010	1		1011	16	
1008	1		1002	25	
1007	4	100	1006	1	64
974	0		1013	0	
975	1		1013	0	
975	1		1015	4	
974	0		1012	1	
974	0	625	1013	0	196
1005	1		995	9	
1007	1		998	0	
1007	1		998	0	
1004	4		998	0	
1006	0	49	998	0	1
1026	16		983	9	
1024	4		982	4	
1022	0		980	0	
1021	1		978	4	
1019	9	525	979	1	361
				$\sum$ 135	$\sum$ 2282

$$\sigma_{BEAM} = \sqrt{\frac{\sum (Yi-\bar{Y}s)^2}{40}} = \pm 1.8 \quad X\,10^{-6} \text{ in/in}$$

$$\sigma_{SAMPLE} = \sqrt{\frac{\sigma}{5}_{BEAM} + \frac{\sum (\bar{Y}s-\bar{Y}b)^2}{9}} = \pm 15.4 \quad X\,10^{-6} \text{ in/in}$$

ClibPDF - www.fastio.com

TABLE 6

STATISTICAL ANALYSIS OF BEAM 1

$\frac{1}{2}$" DIA 270 KSI STRAND FORCE 30.1 KIPS

STRAND MANUFACTURER USS

Yi	$(Yi-\bar{Y}s)^2$	$(\bar{Y}s-\bar{Y}b)^2$	Yi	$(Yi-\bar{Y}s)^2$	$(\bar{Y}s-\bar{Y}b)^2$
1032	16		1044	4	
1029	1		1042	0	
1028	0		1042	0	
1028	0		1040	4	
1025	9	100	1040	4	16
1037	1		1044	1	
1037	1		1043	0	
1035	1		1043	0	
1037	1		1043	0	
1034	4	4	1040	9	25
1044	0		1044	0	
1045	1		1049	25	
1045	1		1043	1	
1045	1		1042	4	
1043	1	36	1041	9	36
1028	0		1037	1	
1029	1		1036	0	
1028	0		1037	1	
1028	0		1033	9	
1028	0	100	1035	1	4
1042	0		1042	1	
1043	1		1041	0	
1042	0		1040	1	
1042	0		1039	4	
1040	4	16	1038	9	0
				$\sum$ 132	$\sum$ 337

$$\sigma_{BEAM} = \sqrt{\frac{\sum (Yi-\bar{Y}s)^2}{40}} = \pm\ 1.8 \quad X\,10^{-6}\ in/in$$

$$\sigma_{SAMPLE} = \sqrt{\frac{\sigma}{5}_{BEAM} + \frac{\sum (\bar{Y}s-\bar{Y}b)^2}{9}} = \pm\ 6.2 \quad X\,10^{-6}\ in/in$$

ClibPDF - www.fastio.com

TABLE 6

STATISTICAL ANALYSIS OF BEAM 2

$\frac{1}{2}$" DIA 270 KSI STRAND FORCE 22.8 KIPS

STRAND MANUFACTURER USS

Yi	$(Yi-\bar{Y}s)^2$	$(\bar{Y}s-\bar{Y}b)^2$	Yi	$(Yi-\bar{Y}s)^2$	$(\bar{Y}s-\bar{Y}b)^2$
920	9		872	9	
914	9		875	0	
917	0		876	1	
916	1		877	4	
917	0	484	873	4	400
901	9		901	1	
900	4		901	1	
899	1		902	0	
896	4		902	0	
896	4	9	902	0	49
861	1		904	1	
863	1		902	1	
861	1		905	4	
864	4		903	0	
863	1	961	903	0	64
907	9		875	1	
912	4		877	1	
913	9		877	1	
913	9		877	1	
907	9	225	878	4	361
906	9		903	1	
903	0		906	4	
902	1		905	1	
901	4		903	1	
902	1	64	904	0	81
				$\sum$ 145	$\sum$ 2698

$$\sigma_{BEAM} = \sqrt{\frac{\sum (Yi-\bar{Y}s)^2}{40}} = \pm\ 1.9 \quad X\,10^{-6}\ in/in$$

$$\sigma_{SAMPLE} = \sqrt{\frac{\sigma}{5}_{BEAM} + \frac{\sum (\bar{Y}s-\bar{Y}b)^2}{9}} = \pm\ 17.3 \quad X\,10^{-6}\ in/in$$

ClibPDF - www.fastio.com

TABLE 6

STATISTICAL ANALYSIS OF BEAM 2

½" DIA 270 KSI STRAND FORCE 29.5 KIPS

STRAND MANUFACTURER USS

Yi	$(Yi-\bar{Y}s)^2$	$(\bar{Y}s-\bar{Y}b)^2$	Yi	$(Yi-\bar{Y}s)^2$	$(\bar{Y}s-\bar{Y}b)^2$
1083	4		1067	0	
1079	4		1069	4	
1081	0		1069	4	
1079	4		1069	4	
1082	1	361	1064	9	25
1053	1		1066	1	
1053	1		1066	1	
1054	4		1066	1	
1050	4		1064	1	
1050	4	100	1064	1	9
1034	9		1078	16	
1031	0		1074	0	
1028	9		1071	9	
1030	1		1073	1	
1031	0	961	1073	1	144
1071	0		1038	0	
1071	0		1038	0	
1072	1		1038	0	
1071	0		1038	0	
1070	1	81	1036	4	576
1073	1		1075	9	
1073	1		1070	4	
1073	1		1072	0	
1070	4		1072	0	
1071	1	100	1070	4	100
				$\sum$ 130	$\sum$ 2457

$$\sigma_{BEAM} = \sqrt{\frac{\sum (Yi-\bar{Y}s)^2}{40}} = \pm\ 1.8 \quad X\,10^{-6}\ in/in$$

$$\sigma_{SAMPLE} = \sqrt{\frac{\sigma}{5}_{BEAM} + \frac{\sum (\bar{Y}s-\bar{Y}b)^2}{9}} = \pm\ 16.5 \quad X\,10^{-6}\ in/in$$

ClibPDF - www.fastio.com

TABLE 6

STATISTICAL ANALYSIS OF BEAM 1

$\frac{1}{2}$" DIA 270 KSI STRAND FORCE 26.5 KIPS

STRAND MANUFACTURER BETHLEHEM

Yi	$(Yi-\bar{Y}s)^2$	$(\bar{Y}s-\bar{Y}b)^2$	Yi	$(Yi-\bar{Y}s)^2$	$(\bar{Y}s-\bar{Y}b)^2$
944	0		947	9	
944	0		950	0	
944	0		950	0	
944	0		951	1	
944	0	36	951	1	0
938	1		949	0	
937	0		949	0	
938	1		949	0	
935	4		949	0	
936	1	169	949	0	1
951	0		962	4	
953	4		958	4	
951	0		962	4	
950	1		959	1	
950	1	1	961	1	100
953	9		940	1	
949	1		939	4	
947	9		938	9	
949	1		943	4	
951	1	0	943	4	81
963	4		956	4	
959	4		956	4	
959	4		952	4	
962	1		952	4	
964	4	121	952	4	16
				$\sum$ 118	$\sum$ 525

$$\sigma_{BEAM} = \sqrt{\frac{\sum (Yi-\bar{Y}s)^2}{40}} = \pm 1.7 \quad X\,10^{-6} \text{ in/in}$$

$$\sigma_{SAMPLE} = \sqrt{\frac{\sigma}{5}_{BEAM} + \frac{\sum (\bar{Y}s-\bar{Y}b)^2}{9}} = \pm 7.7 \quad X\,10^{-6} \text{ in/in}$$

ClibPDF - www.fastio.com

TABLE 6

STATISTICAL ANALYSIS OF BEAM 2

½" DIA 270 KSI STRAND FORCE 26.5 KIPS

STRAND MANUFACTURER BETHLEHEM

Yi	$(Yi-\bar{Y}s)^2$	$(\bar{Y}s-\bar{Y}b)^2$	Yi	$(Yi-\bar{Y}s)^2$	$(\bar{Y}s-\bar{Y}b)^2$
1009	1		1015	1	
1008	4		1016	0	
1011	1		1017	16	
1013	9		1020	1	
1008	4	4	1012	16	16
1009	1		1010	16	
1011	9		1015	1	
1009	1		1015	1	
1007	1		1014	0	
1006	4	16	1014	0	4
1019	1		1006	1	
1020	0		1005	4	
1019	1		1008	1	
1021	1		1007	0	
1019	1	64	1010	9	25
1001	1		1005	16	
1001	1		1010	1	
1002	0		1010	1	
1001	1		1010	1	
1004	4	100	1010	1	9
1022	0		1006	1	
1022	0		1005	4	
1024	4		1008	1	
1024	4		1007	0	
1019	9	100	1010	9	25
				$\sum$ 165	$\sum$ 363

$$\sigma_{BEAM} = \sqrt{\frac{\sum (Yi-\bar{Y}s)^2}{40}} = \pm\ 2.0 \quad X\,10^{-6}\ in/in$$

$$\sigma_{SAMPLE} = \sqrt{\frac{\sigma}{5}_{BEAM} + \frac{\sum (\bar{Y}s-\bar{Y}b)^2}{9}} = \pm\ 6.4 \quad X\,10^{-6}\ in/in$$

ClibPDF - www.fastio.com

TABLE 6

STATISTICAL ANALYSIS OF BEAM 1

$\frac{1}{2}$" DIA 270 KSI STRAND FORCE 29.2 KIPS

STRAND MANUFACTURER UNION

Yi	$(Yi-\bar{Y}s)^2$	$(\bar{Y}s-\bar{Y}b)^2$	Yi	$(Yi-\bar{Y}s)^2$	$(\bar{Y}s-\bar{Y}b)^2$
999	0		1017	1	
999	0		1018	4	
999	0		1015	1	
999	0		1014	4	
997	4	49	1015	1	100
990	1		1009	1	
989	0		1009	1	
989	0		1006	4	
990	1		1006	4	
987	4	289	1009	1	4
988	9		1016	9	
985	0		1014	1	
985	0		1013	0	
985	0		1012	1	
986	1	441	1010	9	49
997	1		1026	1	
997	1		1024	1	
996	0		1025	0	
994	4		1025	0	
994	4	100	1026	1	361
1007	4		1026	1	
1006	1		1026	1	
1005	0		1025	0	
1005	0		1024	1	
1003	4	1	1025	1	361
				$\sum$ 88	$\sum$ 1755

$$\sigma_{BEAM} = \sqrt{\frac{\sum (Yi-\bar{Y}s)^2}{40}} = \pm 1.5 \quad X\,10^{-6} \text{ in/in}$$

$$\sigma_{SAMPLE} = \sqrt{\frac{\sigma}{5}_{BEAM} + \frac{\sum (\bar{Y}s-\bar{Y}b)^2}{9}} = \pm 14.3 \quad X\,10^{-6} \text{ in/in}$$

ClibPDF - www.fastio.com

TABLE 6

STATISTICAL ANALYSIS OF BEAM 1

$\frac{1}{2}$" DIA 270 KSI STRAND FORCE 22.2 KIPS

STRAND MANUFACTURER UNION

Yi	$(Yi-\bar{Y}s)^2$	$(\bar{Y}s-\bar{Y}b)^2$	Yi	$(Yi-\bar{Y}s)^2$	$(\bar{Y}s-\bar{Y}b)^2$
839	0		844	0	
839	0		844	0	
836	9		843	1	
839	0		843	1	
840	1	1	844	0	36
830	4		840	4	
833	1		840	4	
833	1		836	4	
832	0		836	4	
832	0	36	836	4	0
834	1		838	0	
833	0		837	1	
832	1		839	1	
833	0		838	0	
833	0	25	838	0	0
839	1		840	1	
839	1		841	0	
837	1		841	0	
838	0		840	1	
839	1	0	842	1	9
843	1		839	0	
842	0		839	0	
842	0		838	1	
842	0		840	1	
840	4	16	839	0	1
				$\sum$ 60	$\sum$ 124

$$\sigma_{BEAM} = \sqrt{\frac{\sum (Yi-\bar{Y}s)^2}{40}} = \pm\ 1.2 \quad X\,10^{-6}\ in/in$$

$$\sigma_{SAMPLE} = \sqrt{\frac{\sigma}{5}_{BEAM} + \frac{\sum (\bar{Y}s-\bar{Y}b)^2}{9}} = \pm\ 3.7 \quad X\,10^{-6}\ in/in$$

ClibPDF - www.fastio.com

TABLE 6

STATISTICAL ANALYSIS OF BEAM 1

½" DIA 270 KSI STRAND FORCE 29.4 KIPS

STRAND MANUFACTURER UNION

Yi	$(Yi-\bar{Y}s)^2$	$(\bar{Y}s-\bar{Y}b)^2$	Yi	$(Yi-\bar{Y}s)^2$	$(\bar{Y}s-\bar{Y}b)^2$
1013	49		1015	4	
1007	1		1014	1	
1006	0		1015	4	
1004	4		1012	1	
1004	4	4	1009	16	25
1002	1		1008	9	
1002	1		1004	1	
1000	1		1004	1	
1000	1		1005	0	
1001	0	49	1005	0	9
1008	4		1010	1	
1008	4		1012	1	
1002	16		1011	0	
1006	0		1010	1	
1004	4	4	1010	1	9
1008	0		1017	0	
1008	0		1017	0	
1007	1		1017	1	
1008	0		1018	1	
1008	0	0	1017	0	81
1009	0		1005	0	
1009	0		1007	4	
1008	1		1007	1	
1009	0		1005	0	
1008	1	1	1004	1	9
				$\sum$ 142	$\sum$ 191

$$\sigma_{BEAM} = \sqrt{\frac{\sum (Yi-\bar{Y}s)^2}{40}} = \pm 1.9 \quad X\,10^{-6} \text{ in/in}$$

$$\sigma_{SAMPLE} = \sqrt{\frac{\sigma}{5}_{BEAM} + \frac{\sum (\bar{Y}s-\bar{Y}b)^2}{9}} = \pm 4.6 \quad X10^{-6} \text{ in/in}$$

ClibPDF - www.fastio.com

TABLE 6

STATISTICAL ANALYSIS OF BEAM 1

$\frac{1}{2}$" DIA 270 KSI STRAND FORCE 24.9 KIPS

STRAND MANUFACTURER CF&I

Yi	$(Yi-\bar{Y}s)^2$	$(\bar{Y}s-\bar{Y}b)^2$	Yi	$(Yi-\bar{Y}s)^2$	$(\bar{Y}s-\bar{Y}b)^2$
941	1		951	9	
943	9		954	0	
938	4		954	0	
940	0		956	4	
939	1	25	953	1	81
931	0		951	1	
933	4		952	0	
931	0		954	4	
930	1		951	1	
928	9	196	954	4	49
952	4		941	0	
954	0		942	1	
951	9		940	1	
957	9		939	4	
954	0	81	944	9	16
947	0		932	1	
943	16		932	1	
948	1		934	1	
947	0		933	0	
949	4	4	933	0	144
954	0		947	0	
949	25		947	0	
954	0		950	9	
953	1		947	0	
951	9	81	946	1	4
				$\sum$ 159	$\sum$ 681

$$\sigma_{BEAM} = \sqrt{\frac{\sum (Yi-\bar{Y}s)^2}{40}} = \pm\ 2.0 \quad X\,10^{-6}\ in/in$$

$$\sigma_{SAMPLE} = \sqrt{\frac{\sigma}{5}_{BEAM} + \frac{\sum (\bar{Y}s-\bar{Y}b)^2}{9}} = \pm\ 8.7 \quad X\,10^{-6}\ in/in$$

ClibPDF - www.fastio.com

TABLE 6

STATISTICAL ANALYSIS OF BEAM 1

$\frac{1}{2}$" DIA 270 KSI STRAND FORCE 29.9 KIPS

STRAND MANUFACTURER CF&I

Yi	$(Yi-\bar{Y}s)^2$	$(\bar{Y}s-\bar{Y}b)^2$	Yi	$(Yi-\bar{Y}s)^2$	$(\bar{Y}s-\bar{Y}b)^2$
1051	1		1061	16	
1048	4		1058	1	
1051	1		1054	9	
1048	4		1057	0	
1051	1	36	1057	0	1
1050	9		1060	1	
1048	1		1062	1	
1046	1		1064	9	
1047	1		1060	1	
1045	4	81	1063	4	25
1063	4		1062	9	
1061	0		1059	0	
1061	0		1058	1	
1061	0		1059	0	
1059	4	25	1060	1	9
1053	1		1049	1	
1053	1		1048	0	
1052	0		1048	0	
1050	4		1048	0	
1053	1	16	1050	4	64
1054	9		1064	1	
1058	1		1065	4	
1059	4		1064	1	
1058	1		1064	1	
1057	0	1	1062	1	49
				$\sum$ 123	$\sum$ 307

$$\sigma_{BEAM} = \sqrt{\frac{\sum (Yi-\bar{Y}s)^2}{40}} = \pm\ 1.8 \quad X\,10^{-6}\ in/in$$

$$\sigma_{SAMPLE} = \sqrt{\frac{\sigma}{5}_{BEAM} + \frac{\sum (\bar{Y}s-\bar{Y}b)^2}{9}} = \pm\ 5.9 \quad X\,10^{-6}\ in/in$$

ClibPDF - www.fastio.com

TABLE 6

STATISTICAL ANALYSIS OF BEAM 2

$\frac{1}{2}$" DIA 270 KSI STRAND FORCE 24.9 KIPS

STRAND MANUFACTURER CF&I

Y_i	$(Y_i - \bar{Y}_s)^2$	$(\bar{Y}_s - \bar{Y}_b)^2$
996	9	
998	1	
999	0	
999	0	
999	0	49
994	1	
994	1	
993	4	
996	1	
999	16	9
1006	1	
1008	1	
1008	1	
1009	4	
1013	36	225
996	1	
996	1	
995	0	
994	1	
996	1	9
999	4	
996	1	
995	4	
1000	9	
997	0	25

Y_i	$(Y_i - \bar{Y}_s)^2$	$(\bar{Y}_s - \bar{Y}_b)^2$
1000	0	
999	1	
1000	0	
1000	0	
999	1	64
993	0	
994	1	
993	0	
993	0	
991	4	1
991	4	
989	0	
987	4	
989	0	
989	0	9
970	4	
972	0	
974	4	
975	9	
971	1	400
973	16	
981	16	
977	0	
975	4	
979	4	225
	$\sum$ 171	$\sum$ 1016

$$\sigma_{BEAM} = \sqrt{\frac{\sum (Y_i - \bar{Y}_s)^2}{40}} = \pm 2.1 \quad \times 10^{-6} \text{ in/in}$$

$$\sigma_{SAMPLE} = \sqrt{\frac{\sigma}{5}_{BEAM} + \frac{\sum (\bar{Y}_s - \bar{Y}_b)^2}{9}} = \pm 10.6 \quad \times 10^{-6} \text{ in/in}$$

ClibPDF - www.fastio.com

TABLE 6

STATISTICAL ANALYSIS OF BEAM 2

½" DIA 270 KSI STRAND FORCE 29.8 KIPS

STRAND MANUFACTURER CF&I

Yi	$(Yi-\bar{Y}s)^2$	$(\bar{Y}s-\bar{Y}b)^2$
1108	0	
1107	1	
1109	1	
1110	4	
1107	1	64
1124	4	
1119	9	
1124	4	
1121	1	
1122	0	36
1118	0	
1119	1	
1115	9	
1119	1	
1118	0	4
1122	9	
1119	0	
1120	1	
1120	1	
1116	9	9
1112	0	
1110	4	
1110	4	
1112	0	
1114	4	16

Yi	$(Yi-\bar{Y}s)^2$	$(\bar{Y}s-\bar{Y}b)^2$
1119	4	
1118	1	
1116	1	
1116	1	
1116	1	1
1110	1	
1111	0	
1109	4	
1110	1	
1114	9	25
1116	0	
1115	1	
1115	1	
1120	16	
1114	4	0
1117	0	
1117	0	
1115	4	
1117	0	
1119	4	1
1115	4	
1114	1	
1110	9	
1112	1	
1115	4	9
	$\sum$ 149	$\sum$ 164

$$\sigma_{BEAM} = \sqrt{\frac{\sum (Yi-\bar{Y}s)^2}{40}} = \pm\ 1.9 \quad X\,10^{-6}\ in/in$$

$$\sigma_{SAMPLE} = \sqrt{\frac{\sigma}{5}_{BEAM} + \frac{\sum (\bar{Y}s-\bar{Y}b)^2}{9}} = \pm\ 4.3 \quad X\,10^{-6}\ in/in$$

ClibPDF - www.fastio.com

TABLE 7

LABORATORY TEST ON BEAM NO. 2
WITH TRANSVERSE STRAIN GAGES DISCONNECTED

USS STRAND

STRAND FORCE 29.0 KIPS

Operator No. 1		Operator No. 2	
Soft Touch	Hard Touch	Soft Touch	Hard Touch
(10^{-6} in/in)		(10^{-6} in/in)	
1064	1113	1063	1129
1070	1115	1063	1127
1071	1113	1065	1146
1065	1112	1071	1144
1064	1125	1078	1149
1073	1130	1063	1132
1063	1113	1073	1129
1073	1120	1063	1139
1078	1134	1072	1126
1073	1118	1064	1130

ClibPDF - www.fastio.com

TABLE 8

MODULUS OF ELASTICITY

1/2" DIA. 7-WIRE 270 KSI PRESTRESSING STRAND
(LABORATORY TESTS)

Manufacturer	Heat No.	Date Tested	Modulus (E_s) (10^6psi)	Standard Deviation (σ) (lbs.)
USS	47286	8-22-67	26.9	
	47287	8-28-67	26.5	
	47033	9-13-67	27.2	
	47424	9-25-67	26.1	
	47370	9-28-67	25.8	
			26.5	0.3
BETH.	516	8-30-67	27.2	
	548	8-30-67	26.6	
	570	8-30-67	26.4	
	613	8-30-67	26.7	
	866	8-30-67	26.7	
			26.7	0.1
CF&I	7E7K	8-08-67	26.6	
	8D7K	8-18-67	25.6	
	8D7K	8-18-67	25.2	
	8C7K	9-14-67	27.5	
	7D7K	10-02-67	26.6	
			26.3	0.8

where:

$$\sigma = \sqrt{\frac{\sum_{i=1}^{5} (X_i - \overline{X})^2}{(n-1)}}$$

$$\overline{X} = \frac{\sum_{i=1}^{5} X_i}{n}$$

ClibPDF - www.fastio.com

TABLE 9

NEUTRAL AXIS AND MOMENT OF INERTIA
(LABORATORY CALIBRATION)

BEAM NO. 1

P (lbs)	Δ (in)	ϵ (10^{-6} in/in)	EI (lb-in^2)	y (in)
400	0.0212	343	1613212	0.346
600	0.0310	509	1654843	0.350
800	0.0414	681	1652178	0.350
1000	0.0516	853	1656982	0.353
1200	0.0620	1027	1654843	0.355
1400	0.0722	1202	1657899	0.355
1600	0.0826	1378	1656178	0.357
			1649448	0.352

E (10 psi)	I (in^4)
29.0	0.0569
29.5	0.0560
30.0	0.0550

BEAM NO. 2

P (lbs)	Δ (in)	ϵ (10^{-6} in/in)	EI (lb-in^2)	y (in)
400	0.0212	374	1612448	0.384
600	0.0314	555	1633847	0.385
800	0.0424	738	1613240	0.379
1000	0.0526	920	1625220	0.381
1200	0.0632	1103	1623077	0.380
1400	0.0734	1287	1630756	0.382
1580	0.0826	1451	1635260	0.382
			1624836	0.382

E (10 psi)	I (in^4)
29.0	0.0560
29.5	0.0551
30.0	0.0541

ClibPDF - www.fastio.com