REPORT NO. FHWA-CA-TL-78-26

An Investigation Of The Effectiveness Of Asphalt Durablity Tests-Initial Phase

INTERIM REPORT

AUG 1978

Caltrans

CALIFORNIA DEPARTMENT OF TRANSPORTATION

ClibPDF - www.fastio.com

NOTICE

The contents of this report reflect the views of the Office of Transportation Laboratory which is responsible for the facts and the accuracy of the data presented herein. The contents do not necessarily reflect the official views or policies of the State of California or the Federal Highway Administration. This report does not constitute a standard, specification, or regulation.

Neither the State of California nor the United States Government endorse products or manufacturers. Trade or manufacturers' names appear herein only because they are considered essential to the object of this document.

ClibPDF - www.fastio.com

TECHNICAL REPORT STANDARD TITLE PAGE

1. REPORT NO.	2. GOVERNMENT ACCESSION NO.	3. RECIPIENT'S CATALOG NO
FHWA-CA-TL-78-26		

4. TITLE AND SUBTITLE	5. REPORT DATE
AN INVESTIGATION OF THE EFFECTIVENESS OF ASPHALT DURABILITY TESTS - INITIAL PHASE	August 1978
	6. PERFORMING ORGANIZATION CODE
7. AUTHOR(S) N. H. Predoehl and G. R. Kemp	8. PERFORMING ORGANIZATION REPORT NO. 19301-633133
9. PERFORMING ORGANIZATION NAME AND ADDRESS Office of Transportation Laboratory California Department of Transportation Sacramento, California 95819	10. WORK UNIT NO
	11. CONTRACT OR GRANT NO. D-3-54
12. SPONSORING AGENCY NAME AND ADDRESS California Department of Transportation Sacramento, California 95807	13. TYPE OF REPORT & PERIOD COVERED Interim
	14. SPONSORING AGENCY CODE

15. SUPPLEMENTARY NOTES

This is the first report for a research project entitled "An Investigation of the Effectiveness of Asphalt Durability Tests".

16. ABSTRACT

This is the initial report for a study of asphalt durability by the use of laboratory-manufactured briquettes controlling as many variables as possible, viz. asphalt source and grade, aggregate source and grading, mixing temperature, mixing duration, compaction, and void content.

The report details the design, mixing, compaction, and field installation of the briquettes which were prepared at three void content ranges using three asphalts and two different aggregates and then weathered at four different climatic sites. Approximately 900 briquettes were placed in special weathering trays at sites located in coastal, desert, valley and mountain environments.

Also included are test results obtained using various laboratory procedures on the three asphalts used in the study. Testing of the briquettes is being done after one, two, and four years of field weathering. Comparisons between the laboratory weathering test results and field test results are being made as test results become available.

17. KEY WORDS	18. DISTRIBUTION STATEMENT
Accelerated weathering, asphalt tests, briquetts, climatic conditions, compaction control, control conditions, field, laboratory, recovery, test specimens.	No restrictions. This document is available to the public through the National Technical Information Service, Springfield, VA 22161

19. SECURITY CLASSIF. (OF THIS REPORT)	20. SECURITY CLASSIF. (OF THIS PAGE)	21. NO. OF PAGES	22. PRICE
Unclassified	Unclassified	43	

DS-TL-1242 (Rev.6/76)

ClibPDF - www.fastio.com

ClibPDF - www.fastio.com

STATE OF CALIFORNIA
DEPARTMENT OF TRANSPORTATION
DIVISION OF CONSTRUCTION
OFFICE OF TRANSPORTATION LABORATORY

August 1978

FHWA No. D-3-54
TL No. 633133

Chief Engineer

Dear Sir:

I have approved and now submit for your information this interim research project report titled:

AN INVESTIGATION OF THE EFFECTIVENESS OF
ASPHALT DURABILITY TESTS - INITIAL PHASE

Study made by . . . . . Roadbed & Concrete Branch

Under the Supervision of . . . . . D. L. Spellman, P.E.

Principal Investigator . . . . . R. N. Doty, P.E.

Co-Investigator . . . . . G. R. Kemp, P.E.

Report Prepared by . . . . . N. H. Predoehl and
G. R. Kemp

Very truly yours,

George A Hill

GEORGE A. HILL
Chief, Office of Transportation Laboratory

Attachment

NHP/GRK:lb

ClibPDF - www.fastio.com

ClibPDF - www.fastio.com

ACKNOWLEDGEMENT

This work was done in cooperation with the U.S. Department of Transportation, Federal Highway Administration, under Item No. D-3-54.

Acknowledgement is made of the efforts of several individuals who participated greatly in starting this project, viz., James Henderson - laboratory testing; Alojzy Rybicki, Ronald Morrison, and Kenneth Iwasaki - mix design, mixing, and compaction; and to the Maintenance Station personnel in South Lake Tahoe, Fort Bragg, and Indio for providing field weathering site security.

In addition, appreciation is extended to Ms. Lydia Burgin and Eileen Howe who provided typing and editorial assistance during the preparation of this report.

ClibPDF - www.fastio.com

ClibPDF - www.fastio.com

TABLE OF CONTENTS

	Page
INTRODUCTION	1
FINDINGS AND IMPLEMENTATION	2
OBJECTIVES	2
RESEARCH PLAN	3
I. Test Specimen Fabrication and Weathering	3
II. Laboratory Correlation Studies	4
III. Evaluation	5
DESIGN, MIXING, FABRICATION, AND INSTALLATION	5
INITIAL ASPHALT TESTING	13
I. Original Asphalt Properties	13
II. Special Compositional Tests	13
III. Accelerated Weathering Procedures for Predicting Asphalt Durability	18
IV. Initial Weathering Specimen Results	24
REFERENCES	29
APPENDIX A and B	

ClibPDF - www.fastio.com

ClibPDF - www.fastio.com

INTRODUCTION

Since the start of the use of asphalt as a road building material years ago in California, much time and effort has been expended to improve its quality as an effective binder of mineral aggregates. The California Department of Transportation has for years been engaged in developing tests and procedures to measure the durability of asphalts in order to write a specification necessary to obtain a superior product.

The most recent California studies (1) of asphalt durability employed the use of several test sections using asphalts from different sources in highway pavements at various locations around the state. At the same time, samples of the test section asphalts were being artificially weathered using various laboratory methods. At the end of the weathering period the field and laboratory results were compared. Although the study was lengthy (it covered from 4 to 8 years of field weathering) and was quite complex, the results were somewhat inconclusive because of the large number of uncontrolled variables. The study did, however, confirm that oxidation is one of the most important detrimental reactions affecting asphalt in a pavement. The project also showed that to properly study the effects of oxidation and compare field and laboratory results, it would be necessary to have greater control over the compaction of the test pavements than was possible when using normal field compaction control.

This report introduces a new approach to the study of asphalt durability. In this study the asphalt is weathered in laboratory-fabricated briquettes which have had several essential variables controlled more rigidly than was attained during normal construction. These include aggregate source and grading, mixing temperature, mixing duration, compaction procedure,

ClibPDF - www.fastio.com

void content, and uniformity of weathering medium. This Interim report contains a description of the design, mixing, fabrication, and placement of the briquettes in their weathering medium, the initial testing of the briquettes, and the initial testing of the study asphalts using various laboratory procedures proposed for predicting asphalt durability.

FINDINGS AND IMPLEMENTATION

No findings or recommendations for implementation will be presented in this report since this report only details the beginning of this study. The long term results will be forthcoming in the final report which will contain correlation results between field weathering and laboratory test procedures.

OBJECTIVES

The objectives of this study are to determine the relationship, if any, between asphalt properties as measured by various laboratory tests and the degree of compaction of the asphalt concrete on the weathering (oxidation) of asphalts when subjected to various climatic exposures in California (field weathered). This was done by creating "controlled" conditions (asphalt source, mixing time and temperature, voids, etc.) in which the desired objectives could be achieved with as little interference from extraneous variables as possible.

ClibPDF - www.fastio.com

RESEARCH PLAN

I. Test Specimen Fabrication and Weathering

A. Materials

(1) Asphalt - Three AR-4000 grade asphalts representing high, moderate, and low temperature-susceptible crude sources were selected.

(2) Aggregates - Two aggregate sources were used. One represented a nonabsorbent and the other an absorbent type of aggregate.

B. Design - The asphalt concrete generally conformed to standard California Type B, 3/4 inch (19 mm) maximum, medium grading specifications. A separate design for each source of aggregate was made to determine the optimum percent asphalt to use with each aggregate.

C. Mixing - Mixing was done in batches; each batch was mixed in an identical manner as to asphalt content (respective of design optimum for each aggregate), grading, mixing time, and mixing temperature.

D. Fabrication - As one of the primary objectives of this study was to evaluate the effect of different void contents upon asphalt weathering in different climatic conditions, the fabrication of the weathering specimens was controlled to obtain three void ranges (3 to 5%, 7 to 9%, and 10 to 12%).

1. Sample size, shape and number -

(a) 1500 grams each (maximum amount of mix which could be incorporated in a 4-inch (101.6 mm) diameter briquette for weathering purposes and keep approximate 3-1/2 inch (88.9 mm) height).

ClibPDF - www.fastio.com

(b) Two briquettes per sample - (this provides sufficient material for the Abson recovery process).

2. Statistical needs - To aid in the statistical evaluation, the complete sets were produced in duplicate.

E. Weathering - The field work consisted of weathering and testing these specimens as follows:

1. Four climatic areas (Coastal, Valley, High Mountain, and Desert).

2. Weathering periods; initial, 1 year, 2 years, and 4 years.

3. Placement - The specimens were placed in wooden trays and surrounded with sand with only the top surfaces of the specimens exposed. The trays were then placed at the selected weathering sites representing valley climate (hot summers - cool wet winters), coastal climate (mild humid summers - mild wet winters), high mountain climate (mild dry summers - severe cold and wet winters), and low desert climate (mild to warm dry winters - very hot and dry summers) and left undisturbed for the various selected weathering periods.

II. Laboratory Correlation Studies

Laboratory studies consisted of subjecting all of the asphalts used for the study to a number of different procedures that might enable predicting asphalt durability. To determine if there is any correlation between these lab tests and field weathering, asphalts recovered from the field-exposed specimens are being tested and compared to the results of tests performed on the original asphalts.

ClibPDF - www.fastio.com

III. Evaluation

The evaluation will generally involve comparison of the test results from the field-weathered specimens with the results from the various laboratory procedures. Hopefully, good correlations regarding the ability of some of the laboratory procedures to predict asphalt durability will be obtained.

DESIGN, MIXING, FABRICATION AND INSTALLATION

Weathering specimens were prepared using a standard California Type B, 3/4 inch (19 mm) maximum, medium grading mix design (2). Individual designs were made for each aggregate used in the study to determine optimum asphalt content. Table 1 shows the properties of the two aggregates used while Table 2 shows the properties of the bituminous mixes for each aggregate. Table 3 (page 15) shows the properties of the asphalts used in the study.

The mixing was performed in a "Hobart" mixer and, except as noted in Table 2, involved using a batch size of 4500 grams and a mixing time of 90 seconds at a temperature of 300°F (149°C). Each 4500 gram batch was then split into three 1500 gram portions, covered, and allowed to cool to room temperature. The portions were then heated for 90 minutes at 230°F (110°C) prior to fabrication into the weathering briquettes. The compaction effort required was dependent upon the amount of voids desired. During the design phase, various compaction procedures were tried until the desired ranges were obtained. Table 2 details the procedures used for each void range and the resulting success of each procedure as indicated by the void results obtained per random specific gravities. The void ranges all fell within the desired amount except for the 10-12% void range for the non-absorbent aggregate that

ClibPDF - www.fastio.com

TABLE 1

AGGREGATE PROPERTIES

Tests		Spec	Sample No. 74-1041 Non-Absorbent	Sample No. 74-1384 Absorbent
	% passing			
Grading (by wt.)	3/4"	95-100	100	100
	1/2"		83	83
	3/8"	65-80	72	73
	#4	45-60	52	53
	#8	30-45	35	38
	#16		27	30
	#30	15-25	21	16
	#50		14	7
	#100		9	3
	#200	3-7	6	3
Specific Gravity (as received)	Fine		2.77	2.61
	Coarse		2.73	2.39
Surface Area	Factors			
	2		1.04	1.06
	4		1.40	1.56
	8		2.16	2.40
	14		2.94	2.24
	30		4.20	2.10
	60		5.40	1.80
	160		9.60	4.80
Surface Area	$ft^2/lb.$		28.74	17.96
CKE (Calif. TM 303)	Kc		1.1	1.4
	Kf		1.0	1.8
	Km		1.0	1.7
Film Stripping (Calif. TM 302)			None	None

1 inch = 25.4 mm

1 ft^2/lb = 0.20 m^2/kg

ClibPDF - www.fastio.com

TABLE 2

BITUMINOUS MIX PROPERTIES

Test or Property		Sample Designation 74-1041 Non-Absorb. Agg.		Sample Designation 74-1384 Absorb. Agg.	
Calif. Type Mix		Type B		Type B	
Size		3/4" Max.		3/4" Max.	
Type Grading		Medium		Medium	
Asphalt Content Used (Calif. TM 310)		5%		6%	
Stabilometer Value (Calif. TM 366)		43		44	
Swell (Calif. TM 305)		0		0.2	
Moisture Vapor Susceptibility (Calif. TM 307)	%Moist.Absorb.	1%		1%	
	Stabilometer	43		36	
Loads used to obtain desired void contents	Range 3 to 5%	Kneading compacted at 500 psi 150 tamps.	+ 25000 lb Static load for 1 min.	Kneading compacted at 500 psi for 200 tamps.	+ 50000 lb Static load for 1 min.
	7-9%	Kneading compacted at 290 psi for 150 tamps.	+ 1000 lb Static load for 1 min.	Kneading compacted at 320 psi for 150 tamps.	+ 2000 lb Static load for 1 min.
	10-12%	Kneading compacted at 160 psi for 150 tamps.	+ 2000 lb Static load for 1 min.	Only static load of 35000 lb. for 30 seconds.	
Sp.Gravity(Ca TM 308) (Waxed Bulk Sp.Gr.) (Avg.of 2 to 6 randomly selected briquettes)	Target Voids	Sp.Gravity	Voids	Sp.Gravity	Voids
	3-5	2.42	5.1	2.20	4.8
	7-9	2.33	8.6	2.15	6.9
	10-12	2.32	9.0	2.08	10.0
Mix Temperature °F (asphalt & aggregate)		300°F		300°F	
Size of batches		4500 grams		4500 grams	
Samples size (briquettes)		1500 grams		1500 grams except 10-12% void range are 1250 grams	
Mixing time		90 seconds		90 seconds	
Compaction temperature		230°F		230°F	
Heating period before Compaction		90 minutes		90 minutes	
Theo. Max. S.G.		2.55		2.31	

1 psi = 6.8948 kPa 1 lb = 0.4536 kg °F to °C = 5/9(°F-32)

ClibPDF - www.fastio.com

ended up being 9%. It is believed that these void ranges will be adequate to determine if there is a critical point at which the percent voids significantly influence asphalt oxidation and the resultant hardening of the asphalt. All of the briquettes were fabricated and compacted as rapidly as possible. Except as noted in Table 2 for one of the absorptive aggregates, 1500 grams were used for each specimen. Approximately 450 briquettes were fabricated for each aggregate with the mixing and fabrication requiring approximately two weeks. The whole mixing and fabrication operation for both aggregates required approximately one month. The briquettes were placed in weathering trays immediately after compaction each day. They remained in the laboratory at approximately 77°F (25°C) until they were transported to the field weathering sites. The elapsed time from the beginning of mixing until being placed at the weathering sites was approximately two months. Figures 1 and 2 illustrate the tray and how the briquettes were placed in it. Each tray was designed to hold a "set" of briquettes fabricated at the three void ranges from one aggregate source, for each weathering period. This facilitates easy recovery of the weathering specimen in that the recovery of two trays from the weathering site completes the field sampling. Six trays or "sets" were required for the weathering specimens at each of the four weathering sites. Figure 3 details the layout of the trays at the weathering sites. They were placed on 4 by 4 redwood fence posts to make sure they were not in contact with "standing" water and to ensure that rain water would readily flow out of the boxes. The trays were installed over approximately a two week period during October and November, 1974 at the four selected weathering sites. Figure 4 shows the location of the four weathering sites. [Sacramento (valley), Fort Bragg (coastal), South Lake Tahoe

ClibPDF - www.fastio.com

Figure 1

Weathering Tray

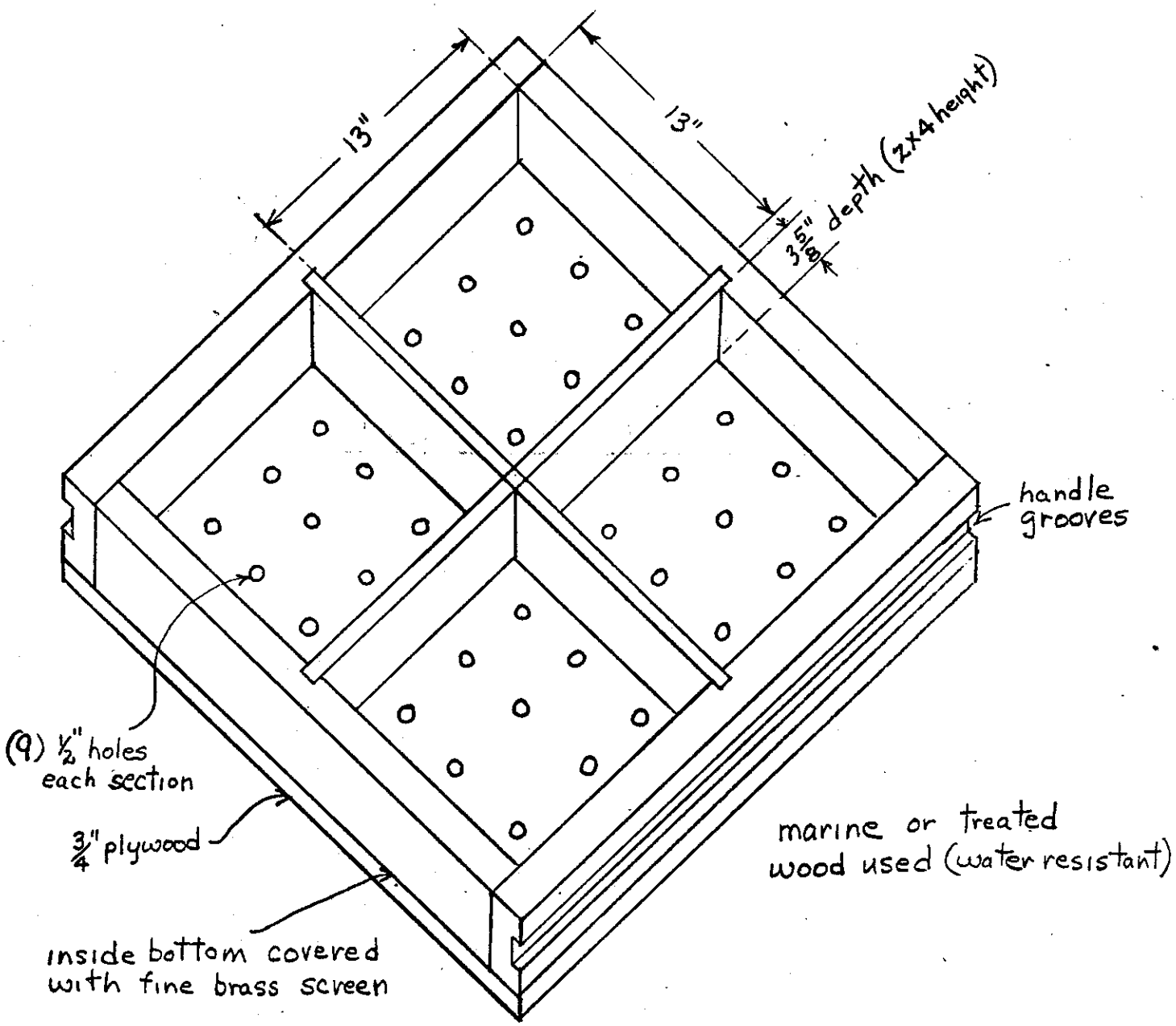

1" = 25.4 mm

ClibPDF - www.fastio.com

Figure 2

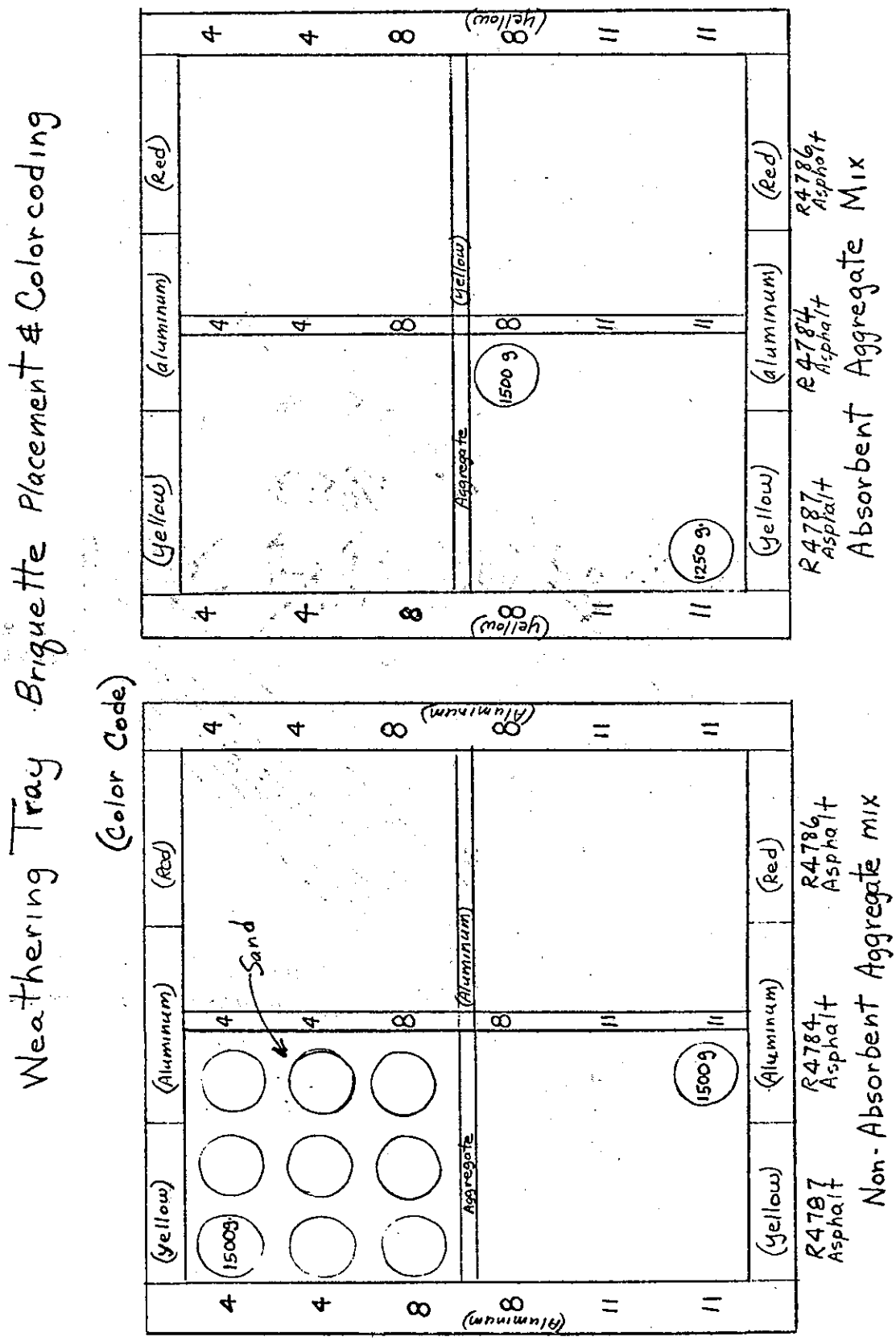

ClibPDF - www.fastio.com

Figure 3

TYPICAL INSTALLATION LAYOUT

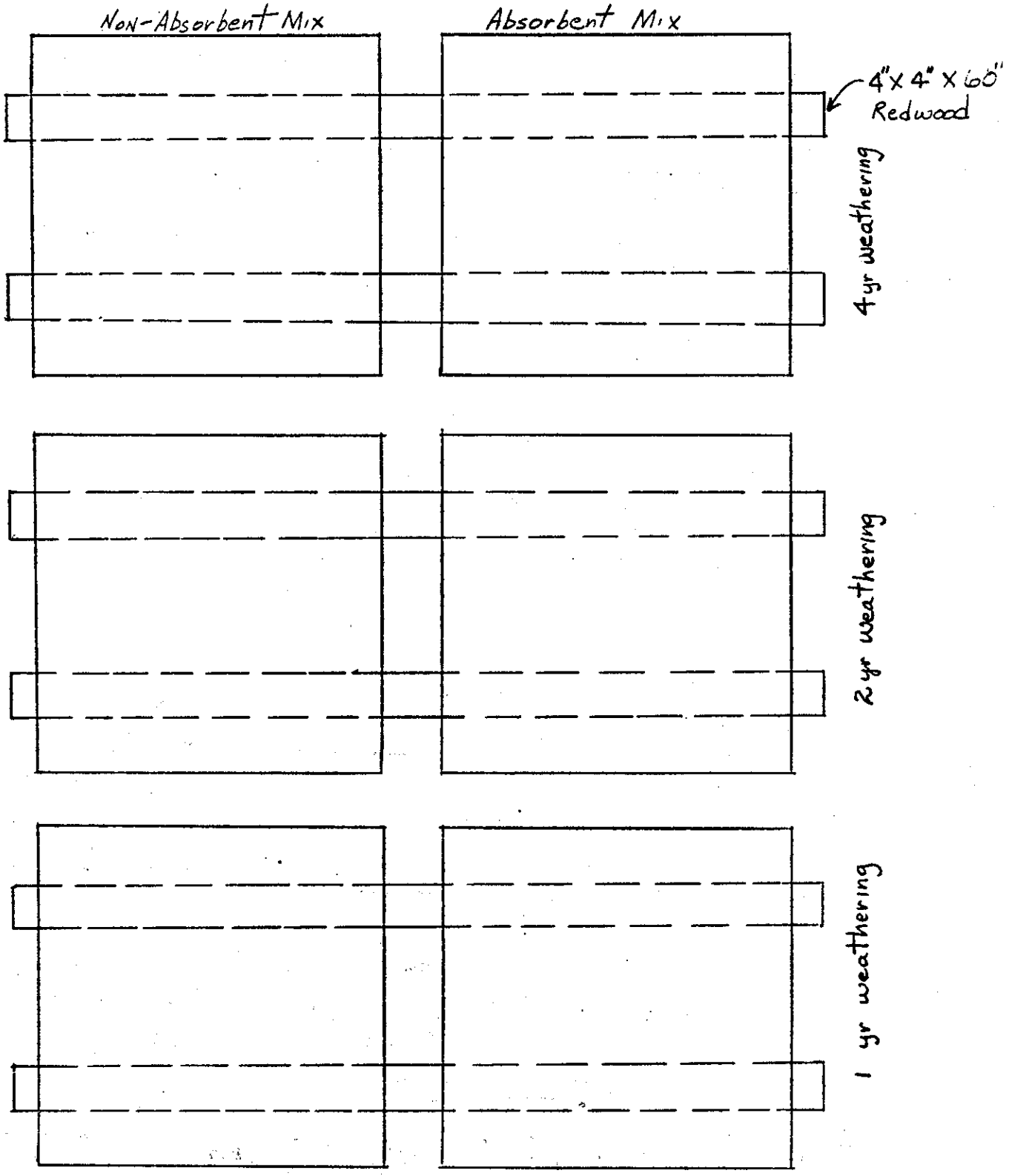

1" = 25.4 mm

ClibPDF - www.fastio.com

Figure 4

Sites of Weathering Trays

① Valley - Sacramento - Translab roof placed 10-23-74

② Mountain - South Lake Tahoe - Maintenance yard placed 10-24-74

③ Coast - Fort Bragg - Maintenance yard placed 10-29-74

④ Desert - Indio - Maintenance yard placed 11-7-74

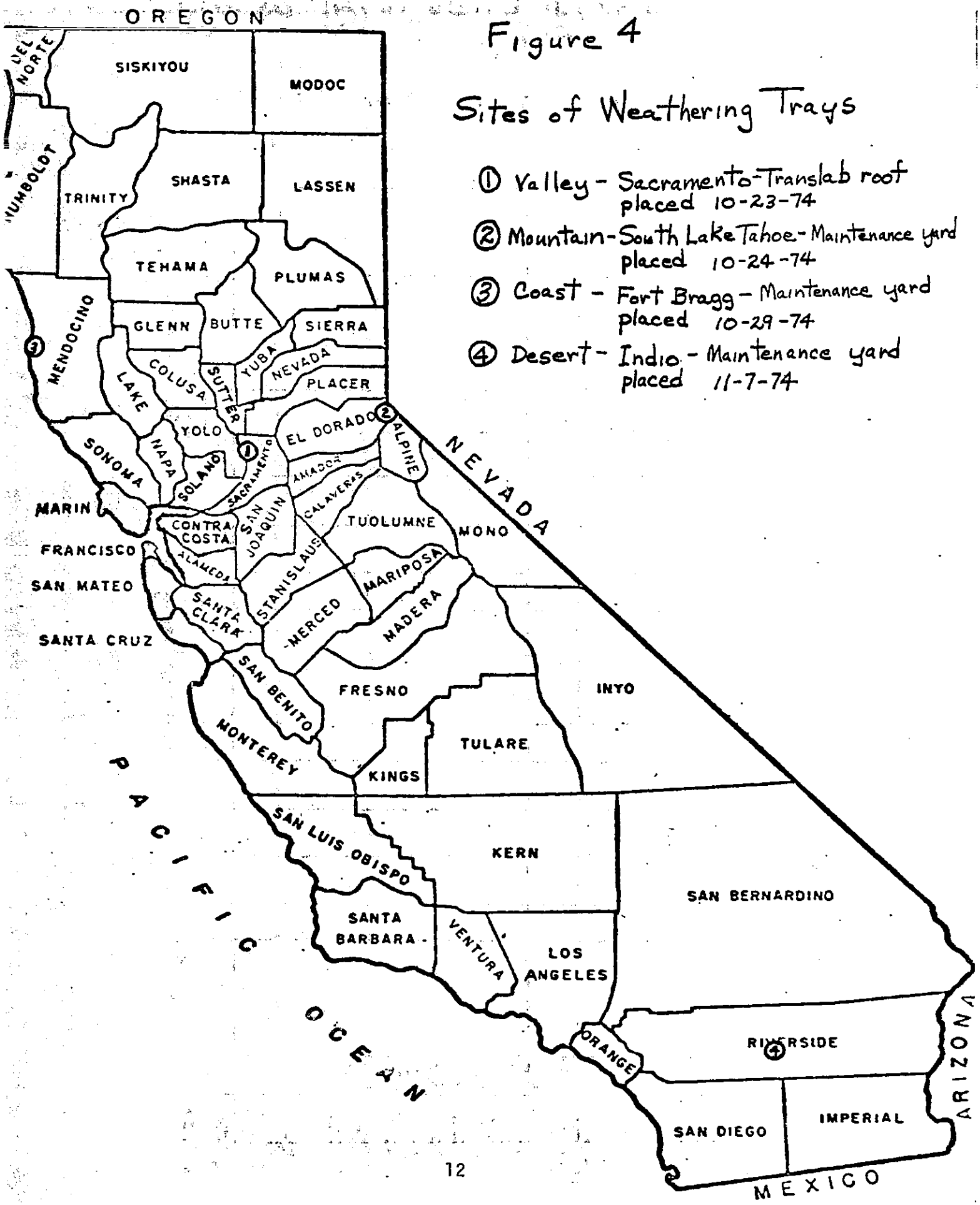

ClibPDF - www.fastio.com

(high mountain), and Indio (low desert).] The trays were placed in highway maintenance yards except for the valley location which is located on the roof of the Transportation Laboratory in Sacramento (see Figure 5).

INITIAL ASPHALT TESTING

I. Original Asphalt Properties - Original asphalt identification tests were performed on the three asphalts used in the study. The tests consisted of the AASHTO and ASTM procedures normally used in asphalt identification. Table 3 shows the test results.

II. Special Compositional Tests - To learn how the original asphalt compositional properties might affect asphalt weathering, several special procedures were employed to determine some of these properties. The procedures were as follow:

A. Rostler Fingerprinting Procedure - This procedure separates the asphalt into different fractions, thus enabling a study of their relationship to each other as well as tests upon the fractions or combinations of the fractions. The "Fingerprint Data" is presented in Table 4 and was determined by Matrecon, Inc.

B. Characterization of Asphaltene Dispersions (Heithaus Method) - This method uses the "Flocculation Ratio - Dilution Method" as described by Heithaus (3,4) to characterize the asphalts by the peptizability (solvability) of their asphaltenes and the peptizing (solvating) power of their maltenes. Also determined is the state of peptization (solution) of the asphaltenes. The results of this determination on both the original asphalt and on the residue from the Rolling Thin Film test are presented in Table 5.

ClibPDF - www.fastio.com

Figure 5
Weathering Sites

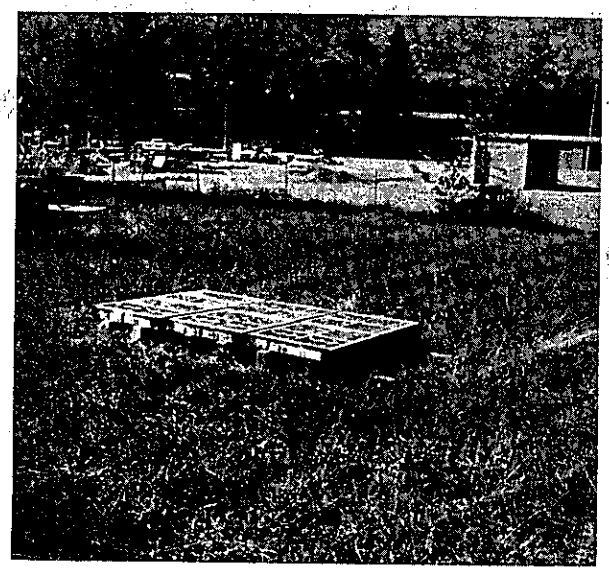

Mountain
South Lake Tahoe, CA

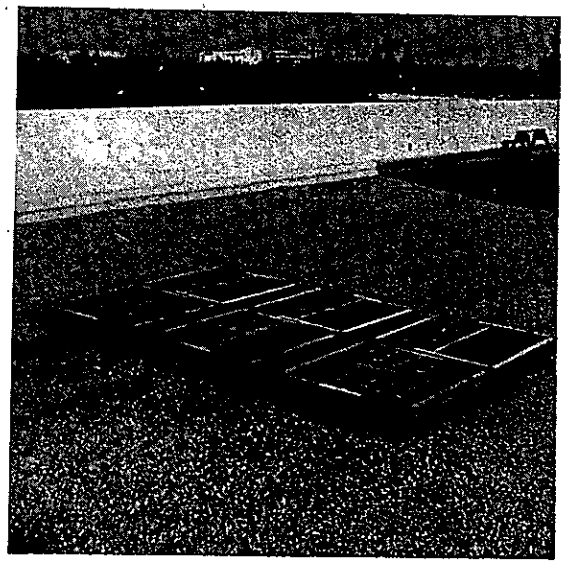

Valley
Roof-TransLab
Sacramento, CA

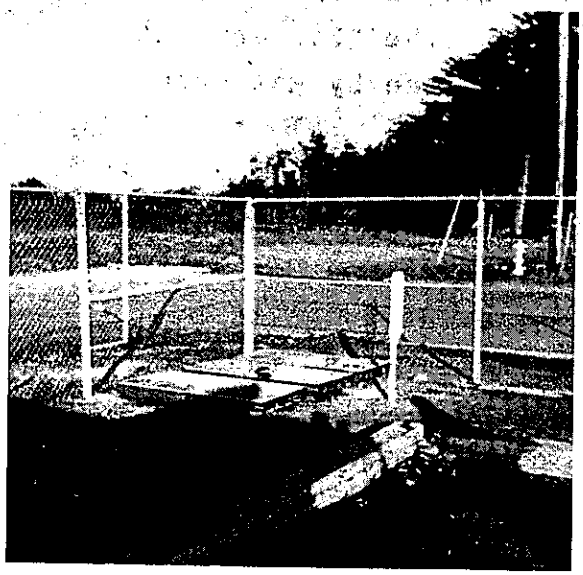

Coastal
Fort Bragg, CA

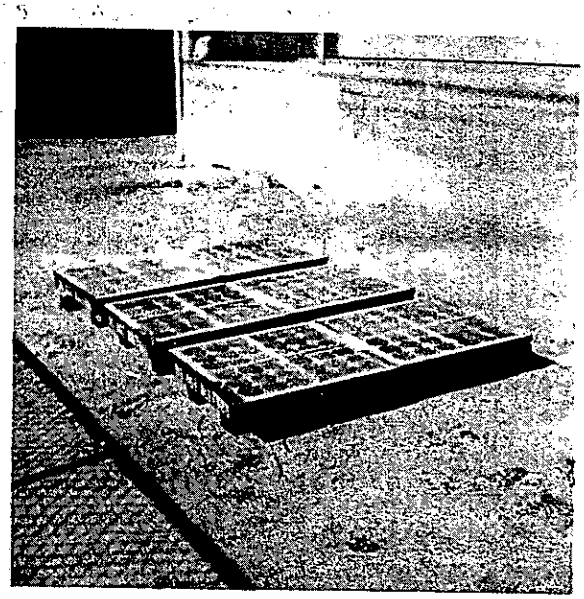

Desert
Indio, CA

ClibPDF - www.fastio.com

TABLE 3

ORIGINAL ASPHALT PROPERTIES

Tests	Test Method AASHTO	Results R4784 Wilmington Crude	R4786 Santa Maria Crude	R4787 San Joaquin Valley Crude
Test on Original Asphalt				
Flash point, Cl.O.C., °F	T48	525	445	545
,P.M.C.T., °F	T73	505	440	515
Absolute Vis.@140°F, poise	T202	1816	862	2166
Kinematic Vis.@275°F, cSt	T201	249	276	270
Penetration at 77°F, °	T49	58	153	52
Solubility in Trichloroethylene, %	T44	99.96	99.99	99.92
Specific Gravity	T228	1.019	1.024	1.021
Test on Residue from R.T.F.C. Procedure AASHTO T240				
Absolute Vis.@140°F, poise	T202	3509	3516	3739
Kinematic Vis.@275°F, cSt	T201	339	492	346
Penetration @77°F, °	T49	41	73	38
% Original Penetration, %	T49	71	48	73
Ductility @77°F 5cm/min, cm	T51	150+	150+	150+

77°F = 25°C

140°F = 60°C

275°F = 135°C

ClibPDF - www.fastio.com

ClibPDF - www.fastio.com

TABLE 4

ORIGINAL ASPHALT PROPERTIES

Fingerprint Data*	Wilmington Card M-16 R-4784	Santa Maria Valley Card M-17 R-4786	Santa Maria Valley Card M-18 R-4787
Composition, % of asphalt			
Fraction A (asphaltenes)	15.4	26.2	12.2
Fraction N (nitrogen bases)	40.6	26.8	42.0
Fraction A_1 (first acidaffins)	13.7	19.2	12.5
Fraction A_2 (second acidaffins)	18.1	15.8	21.0
Fraction P (paraffins)	12.2	12.0	12.3
Wax	0.9	1.0	1.4
$(N+A_1)/(P+A_2)$	1.78	1.65	1.64
N/P	3.29	2.28	3.41
Refractive index of Fraction P(N_D^{25})	1.4884	1.4804	1.4855
Asphalt viscosity at 140°F (60°C), P	2084	963	2527
Penetration at 77°F (25°C), 100g, 5 sec	59	150	49
Maltenes viscosity at 77°F (25°C), P	100,600	845.3	220,800
at 140°F (60°C), P	256.9	13.85	394.8
at 275°F (135°C), cS	92.3	28.94	145.1
Molecular weight of Fraction A	3810	5550	3580
Weight change in Thin Film Oven Test, %	-0.08	-0.94	-0.12
Pellet abrasion loss, average of unaged and 7-day aged, mg/revolution	6.79	0.88	4.37

*Fingerprinting data obtained by MATRECON, INC., Oakland, Calif.

77°F = 25°C
140°F = 60°C
275°F = 135°C

ClibPDF - www.fastio.com

ClibPDF - www.fastio.com

TABLE 5

CHARACTERIZATION OF ASPHALTENE DISPERSIONS
(Heithaus Method)

Sample ID	*Orig. Asphalt Values			After RTF Procedure		
	Pa	Po	P	Pa	Po	P
R4784 (Wilmington Crude)	.698	1.312	4.38	.690	1.358	4.38
R4786 (Santa Maria Crude)	.642	1.180	3.29	.630	1.292	3.49
R4787 (Valley Crude)	.773	1.307	5.76	.771	1.227	5.37

*Pa = Peptizability of Asphaltenes

Po = Peptizing Power of Maltenes

P = State of Peptization of the Asphaltenes

ClibPDF - www.fastio.com

C. Vanadium Content Determination - Studies by Traxler, et al (5,6) have indicated that the presence of vanadium in an asphalt will stimulate a chemical hardening of the asphalt when subjected to solar (actinic) radiation. Traxler determined the quantity of vanadium by a method known as "Neutron Activation Analysis" (5, page 29). This method requires highly specialized and expensive equipment which was unavailable in the California Transportation Laboratory; therefore, an alternate method was sought. The method selected was a method utilizing ion-exchange X-ray fluorescence as described by Bergmann, et al (8) except that there were some equipment modifications. The results are shown on Table 6 which also shows the results which Traxler (5,6) obtained with other asphalts from the same sources. The Traxler results are shown to compare and verify the results obtained by the ion-exchange X-ray fluorescence.

It is hoped that the relationships presented by the compositional test procedures will also relate to the changes which occur when an asphalt is weathered in a field setting and that eventually some significant correlations with original asphalt properties will be discovered.

III. Accelerated Weathering Procedures for Predicting Asphalt Durability - The weathering procedures for predicting asphalt durability which are being used in this study generally include the same procedures used in the former study (1). While there was poor correlation between the predicted results and the actual field data from that study, it was felt that construction and other variables were the cause of the poor correlation, and that, by closer control of variables designed for this study, a better correlation would be achieved. The procedures used are as follows:

ClibPDF - www.fastio.com

TABLE 6

VANADIUM CONTENT DETERMINATION

*Samples provided to Traxler for his project by Calif. Translab.

Sample No.	Source	Calif. Translab Ion-Exchange X-Ray Fluorenscence (PPM)	Traxler, et.al. (5)(Table VIII P.41-43) Neutron Act. Ana. **(PPM)
R4784	Wilmington (L.A. Basin) (AR-4000)	81	
*R4319	Calif. L.A. Basin (85-100)		74.0
R4786	Santa Maria (AR-4000)	110	
*R4316	Calif. Santa Maria (85-100)		230
R4787	Valley Crude (AR-4000)	41	
*R4255	Calif. Valley (60-70)		28.5
*R4310	Calif. Valley (85-100)		34.0

**These sample results from the same general sources are shown to substantiate the ion-exchange X-Ray Fluorescence test method.

ClibPDF - www.fastio.com

TABLE 8

OTTAWA SAND MIX AT 140°F
(2% Ottawa Sand Mix at 325°F)

Curing Period			Samples R4784 Wilmington	R4786 Santa Maria	R4787 Valley
0 hours	Microviscosity* at 77°F (megapoise)	at $0.05\bar{s}^{1}$	6.8	1.7	6.1
		at $0.001\bar{s}^{1}$	7.9	3.1	7.2
	Shear Susceptibility**		.04	.15	.04
	Microductility at 77°F(mm)***		85	33	39
200 hours	Microviscosity at 77°F (megapoise)	at $0.05\bar{s}^{1}$	22.9	8.4	20.3
		at $0.001\bar{s}^{1}$	26.7	16.8	21.8
	Shear Susceptibility		.04	.18	.02
	Microductility at 77°F		52	12	62
400 hours	Microviscosity at 77°F (megapoise)	at $0.05\bar{s}^{1}$	39.6	19.6	34.0
		at $0.001\bar{s}^{1}$	57.3	75.8	46.5
	Shear Susceptibility		.10	.31	.08
	Microductility at 77°F(mm)		26	5	21
600 hours	Microviscosity at 77°F (megapoise)	at $0.05\bar{s}^{1}$	73.0	27.9	49.0
		at $0.001\bar{s}^{1}$	121.0	101.0	66.8
	Shear Susceptibility		.13	.33	.08
	Microductility at 77°F(mm)		2	2	2
800 hours	Microviscosity at 77°F (megapoise)	at $0.05\bar{s}^{1}$	98.3	40.3	68.3
		at $0.001\bar{s}^{1}$	158.0	197.5	99.3
	Shear Susceptibility		.12	.40	.09
	Microductility at 77°F(mm)		3	1	4
1000 hours	Microviscosity at 77°F (megapoise)	at $0.05\bar{s}^{1}$	136.0	58.0	76.0
		at $0.001\bar{s}^{1}$	222.0	336.0	125.5
	Shear Susceptibility		.12	.44	.13
	Microductility at 77°F(mm)		1	0	1
1200 hours	Microviscosity at 77°F (megapoise)	at $0.05\bar{s}^{1}$	165.0	83.0	96.0
		at $0.001\bar{s}^{1}$	251.0	595.0	181.0
	Shear Susceptibility		.11	.50	.16
	Microductility at 77°F(mm)		1	0	2

*Calif. T.M. 347
**Calif. T.M. 347
***Calif. T.M. 349

°F to °C = 5/9(°F-32)

77°F = 25°C
140°F = 60°C
325°F = 163°C

ClibPDF - www.fastio.com

TABLE 9

WEATHERING PLATE TEST RESULTS

Tests	Method	Samples R4784 Wilmington	R4786 Santa Maria	R4787 Valley
Orig. Penetration at 77°F	AASHTO T49	55	147	48
Conditioning-RTF 75 min.	AASHTO T240			
Test on Residue 325°F				
Penetration at 77°F	AASHTO T49	37	66	34
Microviscosity at 77°F	Calif. 348			
at 0.05 sec^{-1} S.R.		5.8	2.6	6.3
at 0.001 sec^{-1} S.R.		7.0	3.9	6.3
Shear Susceptibility (slope of MV Lne)		.05	.11	0
Microductility at 77°F	Calif. 349	75	24	119
Weathering Plate Test 210°F, 20μ, 24 hours	Calif. 347			
Tests on Weathered Residue				
Microviscosity at 77°F	Calif. 348			
at 0.05 sec^{-1} S.R.		55.0	20.7	38.7
at 0.001 sec^{-1} S.R.		79.3	57.0	50.9
Shear Susceptibility (slope)		.10	.26	.08
Microductility 77°F	Calif. 349	13	5	10

77°F = 25°C
210°F = 98.9°C
325°F = 163°C

ClibPDF - www.fastio.com

E. Actinic Light Weathering Test (95°F (35°C)-18 hrs.-1000mw/cm^2 of 3660 angstrom (m^{1}x10^{-10}) Actinic Radiation) - This procedure, developed by Traxler, et al (5,6) of the Texas Transportation Institute, utilizes a special weathering chamber of black light which provides actinic radiation of approximately 3600 angstroms (m^{1}x10^{-10}). Appendix B, which is an excerpt of a report by Traxler, et al (6) describes the equipment and its use. The results of tests upon the residue from this weathering procedure are presented in Table 10.

IV. Initial Weathering Specimen Results - Abson recoveries were performed on samples from each of the groups of briquettes fabricated at the various void ranges at the time of their placement at their weathering sites. The results of tests upon the residue from these Abson recoveries are presented in Tables 11 and 12. A comparison of the test results on the residue from the Abson recovered test briquettes with the results on the residue from the Rolling Thin Film Test (AASHTO T240) (see Table 13) shows that the RTF-C procedure provided a good simulation of the asphalt hardening that occurred during the lab mixing for the Wilmington and Valley crudes and fair simulation for the Santa Maria crude.

ClibPDF - www.fastio.com

TABLE 10

ACTINIC LIGHT HARDENING

*Weathering Chamber - Ultraviolet Light - 95±5°F (35±3°C)

Sample No.	Source	Weathering Conditions* Film Thickness (microns)	Curing Period(hrs)	Tests on Recovered Asphalt Micro Vis(megapoise) at 0.05sec^{-1}SR	at 0.001sec^{-1}SR	Shear Susp.	Micro-Duct.(mm)
R4784	Wilmington	Orig	0	2.45	2.48	.0	90
"	"	RTF 325°F (163°C) 75 min.	0	6.35	7.6	.05	79
"	"	5 (RTF)	7	158.0	395.0	.23	0
"	"	5 (RTF)	7	218.0	570.0	.25	0
"	"	20 (RTF)	7	23.5	35.0	.10	55
"	"	20 (RTF)	7	26.8	32.8	.05	43
"	"	20 (Orig)	18	40.5	71.0	.14	0
"	"	20 (Orig)	7	8.75	8.75	.0	59
"	"	5 (Orig)	7	160.0	325.0	.18	0
R4786	Santa Maria	Orig	0	0.495	0.575	.04	45
"	" "	RTF 325°F (163°C) 75 min.	0	2.9	3.9	.08	29
"	" "	(RTF) 5	7	1380.0	5300.0	.34	0
"	" "	(RTF) 5	7	1700.0	4520.0	.25	0
"	" "	(RTF) 20	7	19.0	46.7	.23	3
"	" "	(RTF) 20	7	22.7	70.5	.29	5
"	" "	(Orig) 20	18	50.0	227.0	.39	0
"	" "	(Orig) 20	7	11.6	24.7	.19	1
"	" "	(Orig) 5	7	293.0	1670.0	.44	0
R4787	Valley	Orig	0	3.2	3.2	.0	98
"	"	RTF 325°F (163°C) 75 min.	0	3.2	3.2	.0	98
"	"	(RTF) 5	7	119.0	208.0	.14	1
"	"	(RTF) 5	7	151.0	272.0	.15	0
	"	(RTF) 20	7	21.1	39.0	.16	28
	"	(RTF) 20	7	16.0	17.0	.02	51
"	"	(Orig) 20	18	23.5	31.6	.08	0
"	"	(Orig) 5	18	885.0	1700.0	.17	0
"	"	(Orig) 20	7	11.7	12.5	.02	16
"	"	(Orig) 5	7	79.0	79.0	.0	1

ClibPDF - www.fastio.com

TABLE 11

RESULTS ON ABSON RECOVERED ASPHALT -(ORIGINAL MIX BRIQUETTES)

Sample No.	Asph. Ref. (% voids)		Non-absorbent Aggregate Pen. @77°F °	S.P. °F	Duct. @77°F cm	A.Vis. @140°F poise	K.Vis. @275°F cs	Absorbent Aggregate Pen. @77°F °	S.P. °F	Duct. @77°F cm	A.Vis. @140°F poise	K.Vis. @275°F cs
R-4784	Wilmington	A	38	127	150+	3330	333	40	130	150+	3201	333
	3-5%	B	35	125	150+	3632	342	35	132	150+	4024	375
		Av.	37	126	150+	3481	338	38	131	150+	3613	354
R-4784	Wilmington	A	40	124	150+	3257	318	38	130	150+	3466	345
	7-9%	B	34	125	150+	3630	345	36	134	150+	3806	405
		Av.	37	125	150+	3444	332	37	132	150+	3636	375
R-4784	Wilmington	A	41	123	150+	3263	333	41	129	150+	3142	333
	10-12%	B	39	124	150+	3511	342	41	131	150+	3208	336
		Av.	40	124	150+	3387	338	41	130	150+	3175	335
R-4786	Santa Maria	A	86	115	150+	2132	411	76	128	134	2922	495
	3-5%	B	82	120	150+	2314	414	71	130	150+	3089	495
		Av.	84	118	150+	2223	413	74	129	141	3006	495
R-4786	Santa Maria	A	86	117	150+	2157	444	80	128	150+	3095	495
	7-9%	B	91	118	150+	2053	402	71	131	150+	3219	498
		Av.	89	118	150+	2105	423	76	130	150+	3157	497
R-4786	Santa Maria	A	86	118	150+	2129	408	82	124	150+	2558	447
	10-12%	B	87	119	150+	2300	414	77	127	150+	2736	480
		Av.	87	119	150+	2215	411	80	126	150+	2647	464
R-4787	Valley	A	36	125	150+	3574	327	38	132	150+	3449	342
	3-5%	B	36	126	150+	3729	327	36	132	150+	3762	354
		Av.	36	126	150+	3652	327	37	132	150+	3606	348
R-4787	Valley	A	35	125	150+	3645	327	34	133	150+	3709	408
	7-9%	B	32	127	150+	4247	339	35	133	150+	4074	333
		Av.	34	126	150+	3946	333	35	133	150+	3892	371
R-4787	Valley	A	35	122	150+	3579	339	34	133	150+	3550	330
	10-12%	B	33	130	150+	3996	327	35	132	150+	3942	339
		Av.	34	126	150+	3788	333	35	133	150+	3746	335
			(Laboratory Mix-Abson Rec.)					(Original Asphalt-RTF Test.)				
R-4784	Wilmington		38	128	150+	3456	345	41		150+	3322	342
R-4786	Santa Maria		82	123	149	2559	451	74		150+	3261	495
R-4787	Valley		35	129	150+	3772	341	37		150+	3707	345

77°F = 25°C
140°F = 60°C
275°F = 135°C

ClibPDF - www.fastio.com

TABLE 12

TEST RESULTS ON ABSON RECOVERED ASPHALT
(Original Mix Briquettes)

Lab. No.	Asphalt (%voids)	Non-absorbent Aggregate: Micro-Viscosity (poise) at $0.05\bar{s}^{1}$S.R.	Non-absorbent Aggregate: Micro-Viscosity (poise) at $0.001\bar{s}^{1}$S.R.	Non-absorbent Aggregate: Shear Suscpt.	Non-absorbent Aggregate: Micro-Duct. (mm)	Absorbent Aggregate: Micro-Viscosity at 77°F(25°C) (poise) at $0.05\bar{s}^{1}$S.R.	Absorbent Aggregate: Micro-Viscosity (poise) at $0.001\bar{s}^{1}$S.R.	Absorbent Aggregate: Shear Suscpt.	Absorbent Aggregate: Micro-Duct. (mm)
R-4784	Wilmington	8.05	8.05	.0	134	7.1	7.9	.03	117
	3-5%	9.25	9.25	.0	115	9.1	9.1	.0	130
	Average	8.65	8.65	.0	125	8.1	8.1	.02	124
	Wilmington	9.45	9.45	.0	117	7.2	7.2	.0	123
	7-9%	9.7	9.7	.0	134	8.8	8.8	.0	119
	Average	9.58	9.58	.0	126	8.0	8.0	.0	121
	Wilmington	10.8	10.8	.0	128	7.15	7.15	.0	125
	10-12%	-	-	-	-	7.0	7.0	.0	122
	Average	10.8	10.8	.0	128	7.07	7.07	.0	123
R-4786	Santa Maria	2.21	3.65	.13	68	2.98	4.75	.12	43
	3-5%	2.17	3.05	.09	59	2.67	4.22	.12	46
	Average	2.19	3.35	.11	63	2.83	4.49	.12	44
	Santa Maria	2.5	3.95	.12	58	4.3	7.6	.14	46
	7-9%	2.55	3.85	.10	41	2.42	4.7	.17	45
	Average	2.52	3.9	.11	49	3.36	6.1	.15	45
	Santa Maria	1.80	2.9	.12	47	3.25	5.9	.15	51
	10-12%	1.84	2.85	.11	45	3.05	4.05	.07	37
	Average	1.82	2.87	.11	46	3.15	4.98	.11	44
R-4787	Valley	12.9	12.9	.0	90	7.4	7.4	.0	129
	3-5%	11.3	11.3	.0	135	8.4	8.4	.0	106
	Average	12.1	12.1	.0	113	7.9	7.9	.0	118
	Valley	12.5	12.5	.0	96	9.3	10.5	.03	131
	7-9%	-	-	-	-	9.8	9.8	.0	89
	Average	12.5	12.5	.0	96	9.5	10.2	.02	110
	Valley	11.0	11.0	.0	85	8.8	8.8	.0	125
	10-12%	10.0	10.0	.0	126	9.5	9.5	.0	118
	Average	10.5	10.5	.0	106	9.2	9.2	.0	121

ClibPDF - www.fastio.com

TABLE 13

COMPARISON OF TEST RESULTS OF ABSON RECOVERED TEST BRIQUETTES (HOBART MIXED) TO RTF-C TEST RESULTS

Sample I.D.	Test Briquettes-Abson Rec.			After RTF-C Test (Simulates Mixing)		
	Pen at 77°F	Absolute Vis 140°F (poise)	Kinematic Vis at 275°F (cSt)	Pen at 77°F	Absolute Vis at 140°F (poise)	Kinematic Vis at 275°F (cSt)
R4784 (Wilmington Crude)	38	3456	345	41	3322	342
R4786 (Santa Maria Crude)	82	2559	451	74	3261	495
R4787 (Valley Crude)	35	3772	341	37	3707	345

77°F = 25°C
140°F = 60°C
275°F = 135°C

ClibPDF - www.fastio.com

REFERENCES

1. Predoehl, N. H., and Kemp, G. R., "Durability of Paving Asphalts, Laboratory Test and Field Data Comparison," State of California, Department of Transportation, Division of Highways, Transportation Laboratory, Research Report CA-DOT-TL-3134-17-74-11, March 1974.

2. California Standard Specifications, January 1974, Section 39, State of California Department of Transportation.

3. Heithaus, J. J., "Measurement and Significance of Asphaltene Peptization," Symposium on Fundamental Nature of Asphalt, sponsored by Division of Petroleum Chemistry of the American Chemical Society, New York, Vol. 5, No. 4-A, September 1960.

4. Skog, J., "Durability of Paving Asphalt, Part II, A Study of the Rostler and Heithaus Test Methods for Paving Grade Asphalts," State of California, Department of Public Works, Division of Highways, Materials and Research Department, M&R 633134-2, July 1966.

5. Traxler, R. N., Scrivner, F. H., and Kuykendall, W. E., Jr., "Loss of Durability in Bituminous Pavement Surface-Importance of Chemically Active Solar Radiation," Research Study 2-8-69-127, Research Report 127-3, Texas Transportation Institute (November 1971).

6. Traxler, R. N., and Shelby, M. D., "Reduction of Asphalt Hardening in Surface Courses of Bituminous Pavements," Proceedings of the Association of Asphalt Paving Technologists, Houston, 1973

ClibPDF - www.fastio.com

7. Skog, J. B., "The Operation, Control, and Application of the Infrared Weathering Machine - California Design," ASTM Special Technical Publication No. 212, 1957.

8. Bergmann, J. G., Ehrhardt, C. H., Granatelli, L., and Janik, J. L., "Determination of Sub-PPM Nickel and Vanadium in Petroleum by Ion Exchange Concentration and X-Ray Fluorescence," Analytical Chemistry, Vol 39, No. 11, September 1967, pages 1258 thru 1261.

ClibPDF - www.fastio.com

A P P E N D I X A

ROLLING MICROFILM CIRCULATING OVEN (RMF-C) DURABILITY TEST

1. Weigh 0.500 gram of the asphalt into a 150-ml beaker using an analytical balance. Dissolve the sample with approximately 10 g of benzene (reagent grade). Filter the dissolved sample through a 10-15 micron sintered glass filter directly into an RTF bottle. Use a small pressure bulb to force solution through filter. Rinse the beaker and filter clean with additional benzene. The dissolved, filtered asphalt is now in the RTF bottle dissolved in approximately 15-20 g of benzene.

2. Place the RMF-C bottle (from this point forward, the RTF bottle containing benzene and 0.5-gram sample is referred to as an RMF-C bottle) into the RTF-C oven.[16] See Figures A-2 and A-3. The oven was previously set at 210°F. A 210°F thermometer, similar to a 275°F ASTM C-13 thermometer,* is hung from the center of the oven one inch from the side. Turn on vacuum to top vents in oven. (See Figure A-3.) Turn the power to the oven off when adding the benzene-diluted samples. Rotate for 15 minutes to evaporate the benzene; turn oven power "on," and run evaporation cycle an additional 15 minutes with heat to achieve a positive benzene evaporation. Without turning power off, remove bottles (in pairs), and insert aluminum foil covered cork stoppers through which

Encl. - Figure A-1 (RE 681561-3)
Figure A-2 (PM 710164-1)
Figure A-3 (RD 710550-1)

extend 2-inch long, 0.041-inch I.D. glass tubes. Turn power on and run for 48 hours. The 0.5-gram residue gives a film thickness on the inside of the RMF bottle of approximately 20 microns. The oven should be equipped with an electronic proportional controller instead of a simple on-off control.

3. At the conclusion of the 48-hour RMF-C exposure, remove the bottle and allow to cool. Scrape out all residue (by means of a razor blade attached to a handle) from the wall (ignore the asphalt on the ends), and place in one of the wells of a porcelain spot plate using spatula to clean residue from scraper (Coors Size 00 Van Waters and Rogers Catalog No. 53636). Heat the spot plate on a steam or hot plate until the asphalt is fluid (approximately 250°F) and mix well with the spatula.

*These thermometers can be ordered from The Brooklyn Thermometer Company.

ClibPDF - www.fastio.com

4. Make up microvicosity plates. Use metal plates supplied by Hallikainen or Cannon. We have incorporated several new procedures in the preparation of microviscosity plates. They include:

a. Use numbered paired plates - measure the thickness at each end of the pair set together without shims over the central part with a metric micrometer capable of measuring to 1 micron.

b. Prepare a duplicate set of plates from the residuum in the spot plate.

c. Dab small amounts of sample with the same spatula used above onto the metal test surfaces on both the top and bottom microviscosity plates. The plates should be warm so the sample can flow and "wet" the entire test surface. Do not touch the sample or plate with your fingers.

d. Move coated plates to a flat, cool surface. Position shims, invert, and locate top metal plate. See Sketch A in Figure A-1.

e. Place a spacer over top metal plate that clears the tops of side spacers. (A glass microviscosity plate works fine.)

f. Transfer entire assembly on flat surface such as a 1/8-inch thick, 3-inch by 6-inch aluminum plate to 275°F oven. Leave in oven for 15 minutes; then place a 500-gram weight, which has been preheated in the oven on top of the spacer, and leave for another 15 minutes. See Sketch B, Figure A-1.

g. Remove assembly. Replace hot 500-gram weight with a cold weight. Place assembly on flat metal surface, check shim drag to be sure of seating, and allow to cool in the air for one hour.

h. As soon as the plates have cooled to room temperature, recheck shim drag by sliding them back and forth. If the shims move freely with no drag, the plates were not properly seated against the shims. If this is the case, prepare another plate immediately. After the plates have stood for one hour in air (with the weight still in place), remove the weight and spacer and measure the thickness of the plates (at each end) containing the shims and sample with the metric micrometer. Subtract the thickness at each end from the corresponding thickness of the bare plates. If the difference is more than a few microns from the shim thickness, prepare another plate immediately. If the thickness is close, place the plates and shims in the 77°F water bath. The asphalt film thickness used in calculating the viscosity is the difference between the measurements taken at Step a and Step h. <u>Do not assume thickness is equal to shim thickness.</u>

5. After a period of five minutes in the water bath, remove the shims, place the plates in the microviscometer, and proceed with the measurement as follows:

a. Apply a load of 1000 grams. Allow a movement of exactly four large divisions (high speed) on the Varian recorder. This represents approximately 0.20-mm movement on the plates. By using the same movement on each sample, a consistent shear history on the sample is established.

ClibPDF - www.fastio.com

b. Remove 1000-gram weight. Apply a 200-gram weight. Allow the measurement to proceed until a study rate of shear is obtained - usually at least two large divisions across the chart. If the slope with the 1000-gram load was >25 degrees, use the slow chart speed with the 200-gram loading.

c. Calculate viscosities at the two load levels (1000 grams and 200 grams) by using the angle of the recorded line and the average thickness as measured by difference between the bare plates and the plates containing the specimen. If the viscosities on duplicate plates differ by more than 10%, prepare another duplicate set of plates from the same residuum in the spot plate and repeat the viscosity measurement.

ClibPDF - www.fastio.com

FIGURE A-1

SAMPLE PREPARATION WITH
METAL MICROVISCOSITY PLATES

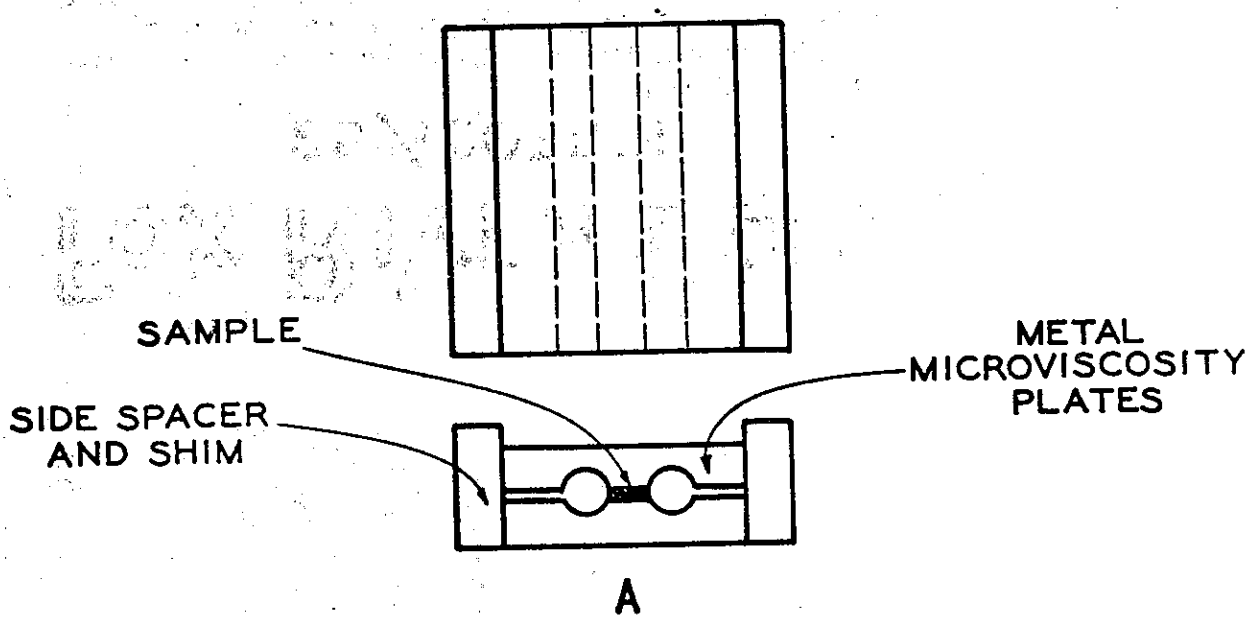

A

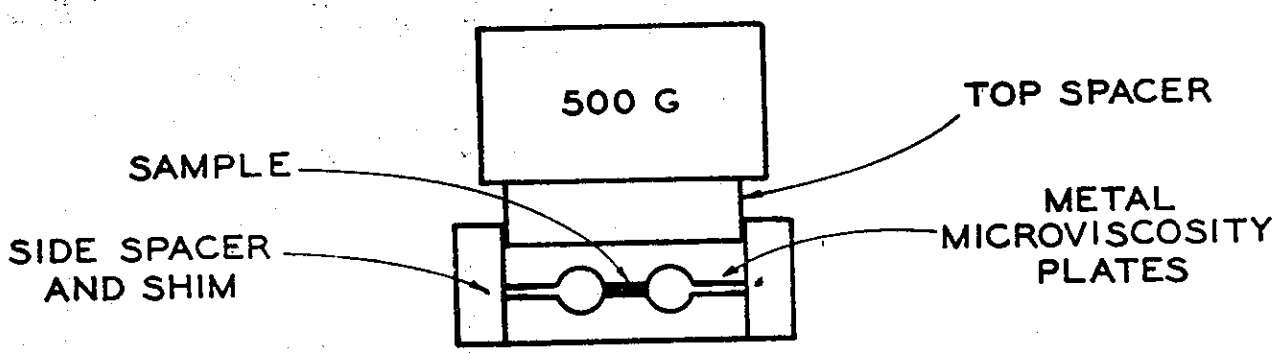

B

CHEVRON RESEARCH
COMPANY
RICHMOND, CALIFORNIA
RJS RE 681561-3

ClibPDF - www.fastio.com

FIGURE A-2

RTF - CIRCULATING OVEN

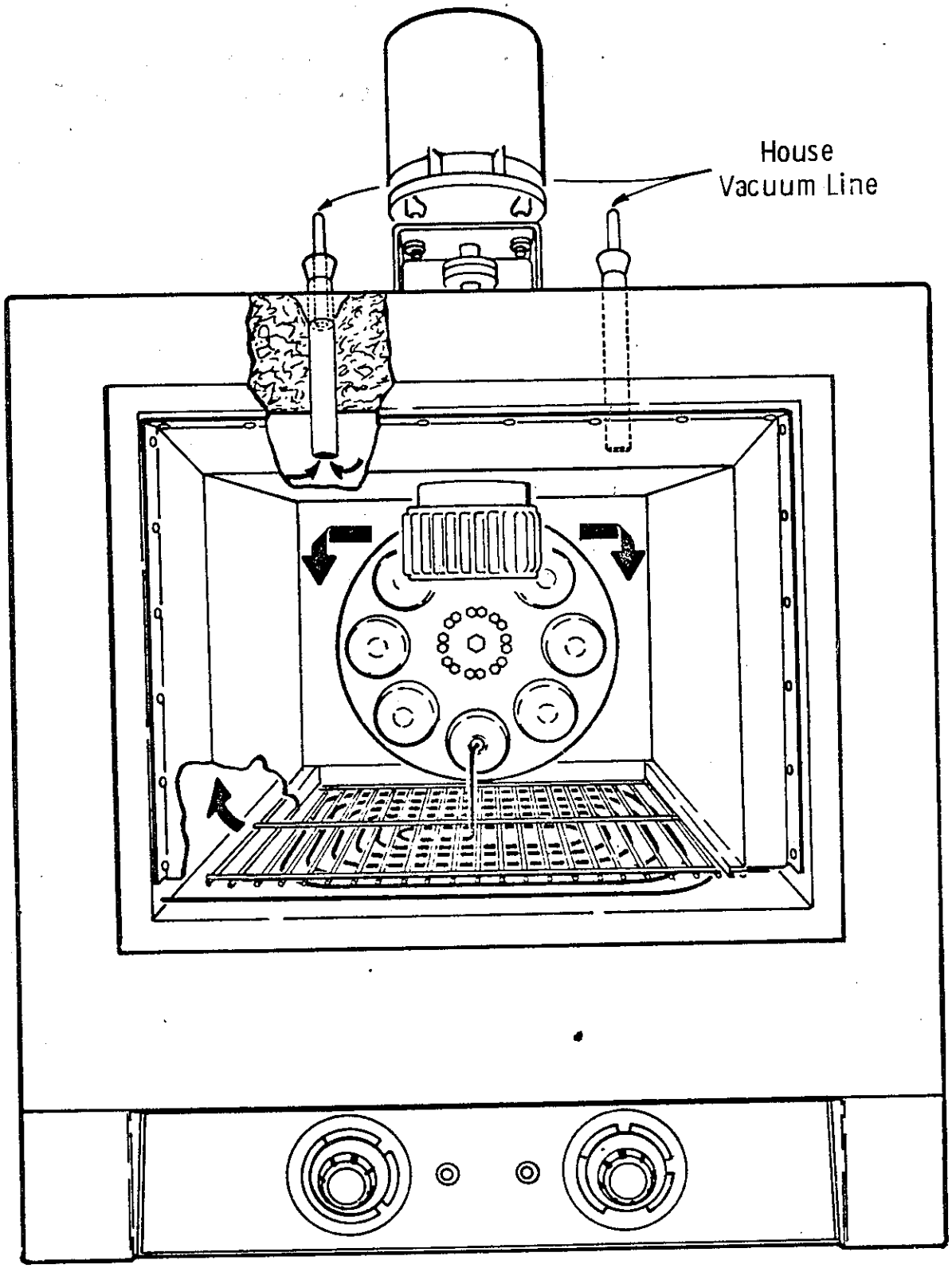

CHEVRON RESEARCH COMPANY
RICHMOND, CALIFORNIA

RJS RD 71052

ClibPDF - www.fastio.com

ClibPDF - www.fastio.com

APPENDIX B

(Excerpt from Vol. 42, AAPT 1973 - "Reduction of Asphalt Hardening in Surface Courses of Bituminous Pavements," R. N. Traxler and M. D. Shelby.)

TRAXLER AND SHELBY

DEVELOPMENT OF A NEW TEST FOR ASPHALT DURABILITY

Experience gained in recent years, and reviewed above, points to the need for a reasonably rapid, convenient and informative laboratory test that can be used as a control test in the specifications for road building asphalts used in pavement surfaces. The test should incorporate the effects of time, air, moderate ambient temperature, and actinic radiation, such as the ultraviolet and probably some of the short visible solar radiation. Results should be expressed in numerical values that can be used to classify the asphalt cements in reference to their serviceability.

In the development of a satisfactory test it was necessary to consider the asphalt film thickness to be used, concentration of the actinic radiation (power per cm.^{2}), a standard time of exposure and a reasonably constant temperature of the asphalt film. The establishment of the most discriminatory and convenient combination of the four variables turned out to be involved and time consuming. The units used are presented below.

Film Thickness

Thickness of the asphalt film was varied from 10 to 2700 microns and it was found that thin films were essential for a reasonably rapid test. Ten microns were selected as the film thickness to be used in the exploratory work discussed in this paper because it approximates the average film thickness generally encountered in practical use.

ClibPDF - www.fastio.com

Source and Intensity of Radiant Energy

Five Sylvania Black Light 15-watt Lamps (F15T8-B1) each 18 in. long were mounted as a block to irradiate an area of 18 in. x 18 in. This block of lights was supported in an adjustable cabinet open on all sides with a loose aluminum coated cloth curtain, which could be raised or lowered. The curtain was used to protect the operator against excessive radiation. The lamps could be located at a maximum of 14.5 in. from the bottom of the cabinet or at any lesser desired distance from the source of radiation. Wavelengths emitted by these lamps ranged from 3200 to 4200 Angstroms with a maximum intensity at 3600 A. The center of the cabinet floor was marked off with a square 10 in. x 10 in. Samples were always placed in this area in order for them to receive uniform and maximum radiation from the bank of lamps.

A Black-Ray Ultraviolet Intensity Meter with a 3660 Angstrom Sensor was used to determine the intensity of radiation over the area covered by the samples. The meter used measures radiation intensity in microwatts per square centimeter ($mw/cm.^2$).

The films were exposed at various distances from the source of radiation to give 500, 750 and 1000 microwatts (5,000, 7,500 and 10,000 ergs per sec.) per $cm.^2$ of exposed sample. One thousand $mw/cm.^2$ was found to be the most satisfactory concentration of radiation and was used in obtaining the data presented in the followin pages. Asphalt films were located 3 in. from the lamps to obtain this quality of radiant energy.

Exposure Time

Exposure time varied from 3 to 18 hours. Continuous exposure during a normal work day (8 hours) was not sufficiently severe

ClibPDF - www.fastio.com

for many of the asphalts investigated. Thus, 18 hours was established as an adequate time of exposure for most of the asphalts studied and a convenient time for a one-shift laboratory. A test started at 3 p.m. was terminated the next day at 9 a.m.

Air Flow

The loose curtain allowed slow circulation of air past the film of asphalt.

Temperature of Sample

With the bank of lights operating in the cabinet, which was located in an air conditioned room held at 75 $\pm$ 2 F., the temperature of the glass plates coated with the film of asphalt was maintained at 95 $\pm$ 5 F.

Details of the Final New Test

Ten-micron thick films of asphalt are applied to 4 cm. x 4 cm. glass plates by the technique given in ASTM Book of Standards (17) and the asphalt film is exposed in air to 1000 mw/cm.^{2} of 3660 Angstrom actinic radiation at 95 F. for 18 hours. The glass plates are taken from the cabinet and allowed to cool. A razor blade is used to remove the hardened asphalt from the 4 cm. x 4 cm. plates prior to placing on the 3 cm. x 2 cm. glass plates used in the thin film, sliding place viscometer. Viscosities of the original and hardened asphalt are determined at 77 F. and calculated at 5 x 10^{-2}sec.$^{-1}$ rate of shear. The Hardening Index (X_2) of an asphalt is its viscosity at 77 F. after exposure to the new test divided by its original viscosity determined at the same temperature and rate of shear.

ClibPDF - www.fastio.com

Appendix B

Drawing of ACTINIC LIGHT Weathering Cabinet built by Calif. Transportation Laboratory

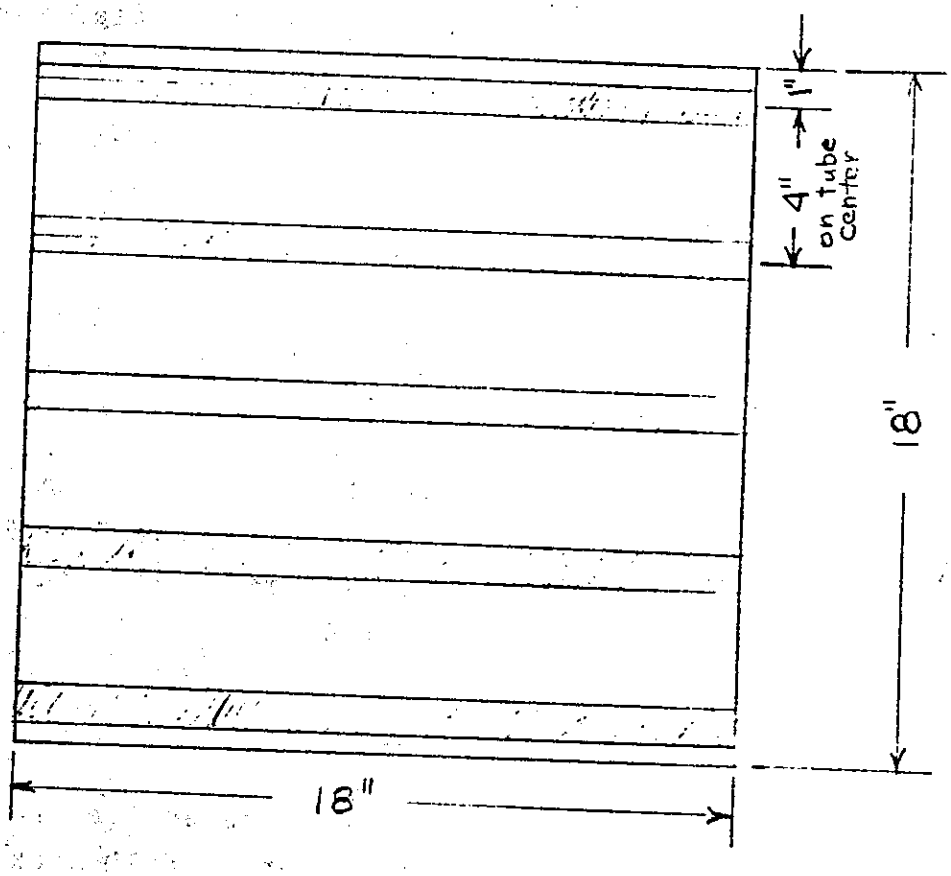

Sylvania Black Light
15 Watt Lamp (F15T8-BL)
Tubes 18" Long (5 required)

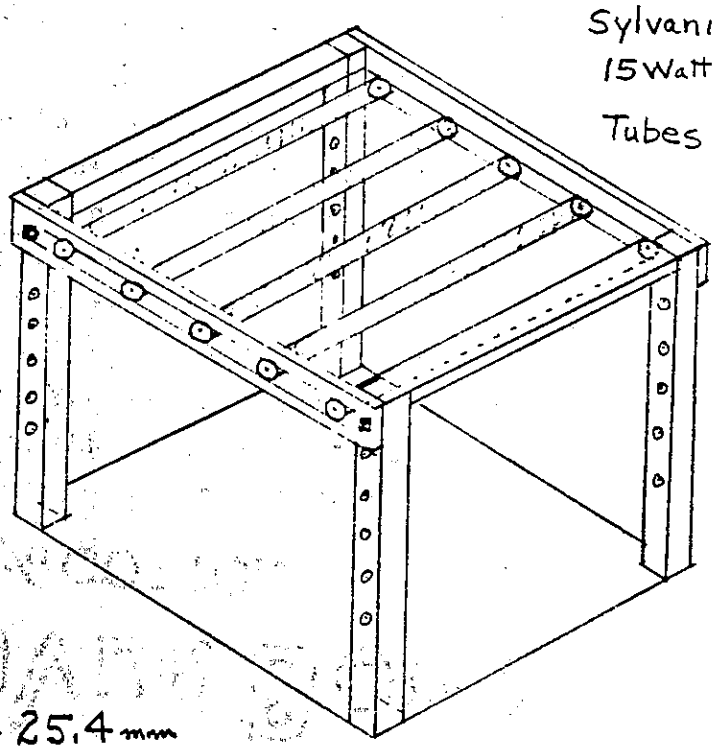

Foil curtains used on Sides

1" = 25.4 mm

ClibPDF - www.fastio.com