ClibPDF - www.fastio.com

ClibPDF - www.fastio.com

TECHNICAL REPORT STANDARD TITLE PAGE

1. REPORT NO.	2. GOVERNMENT ACCESSION NO.	3. RECIPIENT'S CATALOG NO.
4. TITLE AND SUBTITLE TRAFFIC CONGESTION MONITOR		5. REPORT DATE November 1973 6. PERFORMING ORGANIZATION CODE 19103-762503-636346
7. AUTHOR(S) Donner, Robert L. and Welsh, Lawrence E.		8. PERFORMING ORGANIZATION REPORT NO. CA-DOT-TL-6346-3-73-42
9. PERFORMING ORGANIZATION NAME AND ADDRESS Transportation Laboratory California Division of Highways Sacramento, California 95819		10. WORK UNIT NO. 11. CONTRACT OR GRANT NO. C-1-2
12. SPONSORING AGENCY NAME AND ADDRESS California Division of Highways Sacramento, California 95807		13. TYPE OF REPORT & PERIOD COVERED Interim Dec. 1970 to July 1972 14. SPONSORING AGENCY CODE

15. SUPPLEMENTARY NOTES

This study was conducted in cooperation with the U. S. Department of Transportation, Federal Highway Administration, "Evaluation and Development of Traffic Data Acquisition Equipment."

16. ABSTRACT

This research was directed at designing, developing and implementing a device to monitor vehicle speed and actuate a warning device when critical conditions of low speed and volume were attained. An initial device was developed and field tested by the Transportation Laboratory. A modified standard product was obtained from a manufacturer and field tested. Both versions of the Traffic Congestion Monitor operated successfully.

It was concluded that the placing into operation of the Traffic Congestion Monitor is feasible and desirable.

17. KEY WORDS	18. DISTRIBUTION STATEMENT
Loop detectors, magnetometers, traffic congestion, traffic safety, accident reduction	Unlimited

19. SECURITY CLASSIF. (OF THIS REPORT)	20. SECURITY CLASSIF. (OF THIS PAGE)	21. NO. OF PAGES	22. PRICE
Unclassified	Unclassified	12	

HMRT – 1242 (ORIG. 9/72)

ClibPDF - www.fastio.com

ClibPDF - www.fastio.com

STATE OF CALIFORNIA—BUSINESS AND TRANSPORTATION AGENCY

RONALD REAGAN, Governor

DEPARTMENT OF TRANSPORTATION
DIVISION OF HIGHWAYS
TRANSPORTATION LABORATORY
5900 FOLSOM BLVD., SACRAMENTO 95819

November 1973
Trans. Lab No. 636346-3
C-1-2

Mr. R. J. Datel
State Highway Engineer

Dear Sir:

Submitted herewith is an interim research project report titled:

TRAFFIC CONGESTION MONITOR

Lawrence E. Welsh, P. E.
Principal Investigator

Report Prepared By
Lawrence E. Welsh, P. E.

Assisted By
L. B. Alsop

Under the Supervision of
Robert L. Donner, P. E.
Wallace H. Ames, P. E.

Very truly yours,

JOHN E. BEATON
Chief, Transportation Laboratory

Attachment

ClibPDF - www.fastio.com

ClibPDF - www.fastio.com

ACKNOWLEDGMENTS

We wish to express our appreciation to the District 05, District 10 and Headquarters Traffic Branches of the California Department of Transportation for their assistance and cooperation.

The contents of this report reflect the views of the Transportation Laboratory which is responsible for the accuracy of the data presented herein. The contents do not necessarily reflect the official views or policies of the State of California or the Federal Highway Administration. This report does not constitute a standard, specification or regulation.

ClibPDF - www.fastio.com

ClibPDF - www.fastio.com

TABLE OF CONTENTS

	Page
INTRODUCTION	1
CONCLUSIONS AND RECOMMENDATIONS	2
IMPLEMENTATION	3
THEORY OF OPERATION	4
APPENDICES, 1 and 2	6

ClibPDF - www.fastio.com

ClibPDF - www.fastio.com

INTRODUCTION

Traffic engineers are continually challenged to provide warnings which will reduce hazard and delay to the traveling public. Warning signs or flashers have been widely used in the past in hazardous areas to warn motorists of possible danger. These non-traffic-responsive devices have been ignored too often by commuters who travel the route daily, and they then become involved in an accident when the hazardous situation occurs.

Our research into this problem was directed towards overpasses on freeways or expressways where a signalized diamond or other intersection causes a line of vehicles to back up onto the overpass. High speed traffic cresting the overpass cannot see the line of vehicles in time to safely stop and another rearend collision happens. The same situation occurs on underpasses or blind curves where visibility ahead is restricted and speeds are in excess of approximately 45 miles per hour.

Our objective was to design and develop a device that would continuously monitor some traffic parameter and alert the motoring public to a possible hazard. The specific parameter we chose to monitor was vehicle speed. We also decided to count vehicles in order to correlate the number of vehicles at some speed to hazardous situations.

One of our main concerns was to develop a device which would be actuated by a switch (transistor) closure to ground. Using that principle, a loop detector, a magnetometer amplifier or even tape switches could be used as the sensing devices.

The Traffic Congestion Monitor operates in the following manner: A "low" speed (10 - 50 mph) is selected by a rotary switch. Then another rotary switch is set to a selected "Number of Vehicles". The turn on condition is met if the selected number of vehicles are detected going through the detection zone at the selected speed or slower. A relay is then activated. This relay could be used to control a warning sign or flasher. The relay will remain activated until the conditions for de-activating it are met. These conditions are similar to the "turn-on" criteria. A "high" speed (20 - 60 mph) is selected by a rotary switch, then a selection is made of the "number of vehicles". If the selected number of vehicles are detected passing through the detection zone at the selected speed or faster, the "turn-off" condition is met and the relay is de-activated. The process then repeats itself, looking for the slow vehicles that could indicate a hazardous situation.

ClibPDF - www.fastio.com

CONCLUSIONS AND RECOMMENDATIONS

The Traffic Congestion Monitor developed under this project for incident detection and warning is highly desirable for upgrading safety. The unit can be adjusted for various speeds and numbers of vehicles so that it can be applied to many different situations. It is traffic responsive and will not cause an indication of a hazardous condition unless the pre-set criteria are met.

We recommend that installations using the Traffic Congestion Monitor be considered where hazardous congestion conditions are known to exist.

ClibPDF - www.fastio.com

IMPLEMENTATION

The results of this phase of the research project have been applied at three different locations. In May of 1971 the Traffic Congestion Monitor was demonstrated to Traffic Engineers from Districts 03, 04, 10 and Headquarters. The first installation was made on I-80 (E.B.) at the "B" Street overcrossing in Sacramento.

The equipment used was designed and developed at the California Transportation Laboratory.

After this demonstration, Traffic Data Systems (TDS) of Colorado Springs, Colorado, contacted the California Transportation Laboratory regarding the Traffic Congestion Monitor. We discussed modifying one of their products, the VM83, so that it would functionally accomplish the task.

The modified VM83 and two LDR356 loop detectors were loaned to the Transportation Laboratory for evaluation. An installation using the TDS equipment was made by District 10 personnel in Stockton on Charter Way (E.B.) at Airport Way. The equipment, after performing satisfactorily, was returned to the Transportation Laboratory.

A request was received from District 05 to demonstrate the TDS equipment. Laboratory personnel demonstrated the TDS equipment in Santa Barbara in July, 1972 and the equipment performed very well.

District 05 Traffic Department is designing an installation utilizing the Traffic Congestion Monitor. Purchase specifications for this installation were developed under this research project.

ClibPDF - www.fastio.com

THEORY OF OPERATION

When a vehicle enters the area of influence of loop 1 (Figure 1) it opens a gate. This gate allows pulses to enter a counter or accumulator, at the rate of 60 pulses per second. These pulses are totalized over the period of time required for the vehicle to travel from loop 1 until it reaches the area of influence of loop 2. When the vehicle is detected by loop 2 the gate is closed, preventing any additional pulses from entering the counter.

The number of pulses in the counter is inversely proportional to vehicle speed. A relatively large count indicates the vehicle was moving rather slowly. Conversely a small count indicates a high speed vehicle. If the count accumulated is equal to or larger than the pre-selected, low-speed threshold, one count will be entered in the "slow-speed vehicles" counter. If a predetermined number of slow vehicles pass through the detection zone consecutively, the output relay will be energized and remain "locked-in". If one vehicle passes through the detection zone at a speed higher than the pre-selected, high-speed threshold, before the output relay is energized, the "slow vehicle counter" will be reset to zero and the search for consecutive slow moving vehicles will start again. If a vehicle passes through the detection zone at a speed above the low limit but less than the high limit, it will be ignored. This is a hysteresis or dead band. Once the output relay is energized, it will remain in that condition until a pre-selected number of vehicles traveling at or above the upper speed threshold pass through the two loops. The Traffic Congestion Monitor will then de-energize the output relay, reset the vehicle counters and begin a search for slow moving vehicles.

ClibPDF - www.fastio.com

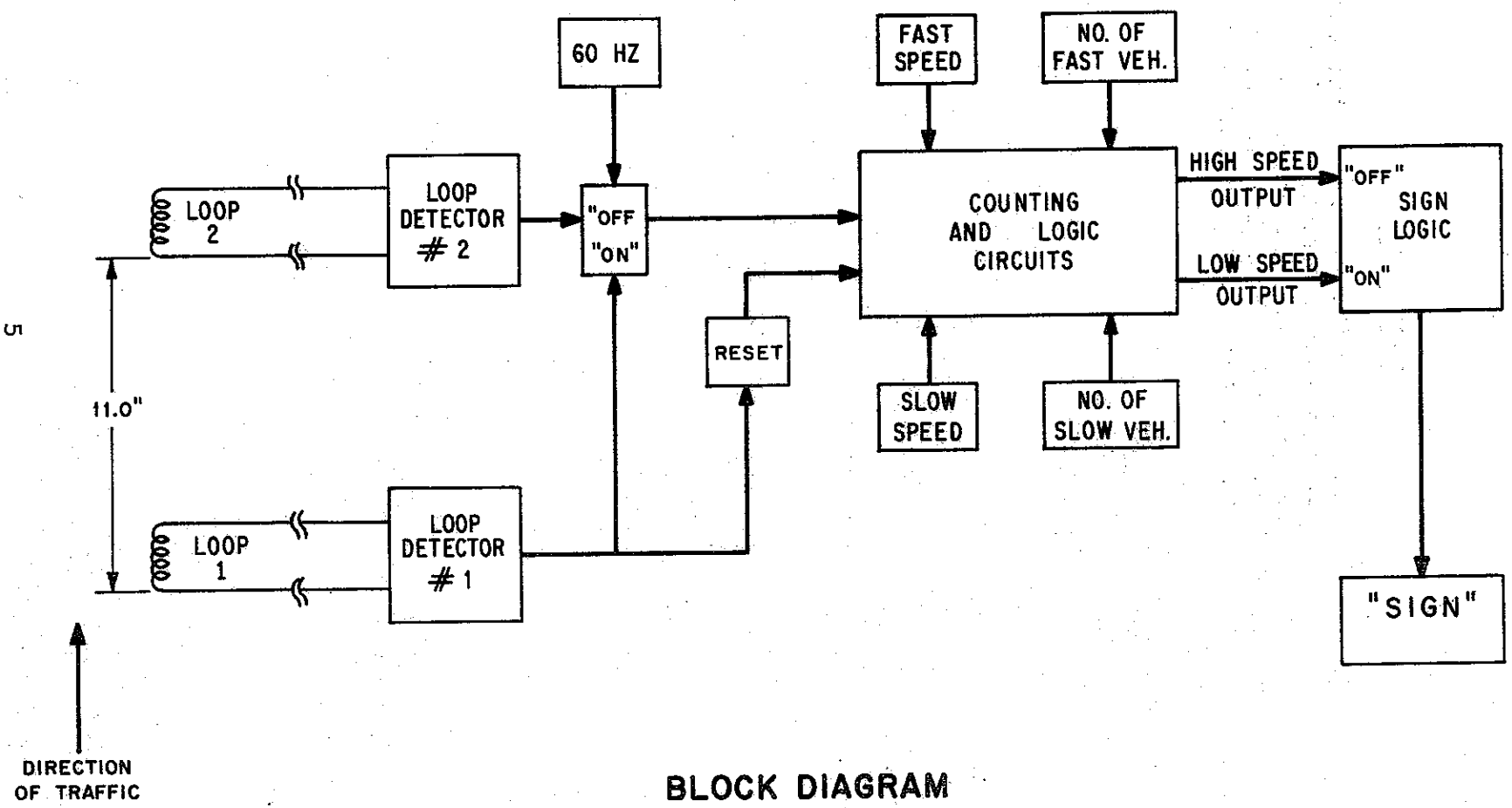

BLOCK DIAGRAM

TRAFFIC CONGESTION MONITOR

Figure 1

ClibPDF - www.fastio.com

APPENDIX 1

The following logic schematic (Figure 2) is the detailed circuit diagram of the Traffic Congestion Monitor designed and developed at the California Transportation Laboratory in Sacramento. Solid state integrated circuits using both DTL (diode-transistor logic) and TTL (transistor-transistor logic) devices were chosen to implement our design.

ClibPDF - www.fastio.com

TYPE	I.C.#	VCC	GND	FUNCTION
839	1, 2, 8, 7	PIN 14	PIN 7	÷ 16
SN7473	3, 4	4	11	DUAL J-K FF
849	6, 9	14	7	QUAD 2 INPUT
861	11	14	7	DUAL 4 INPUT
837	5	14	7	HEX INVERTER
SN7430N	10	14	7	8 INPUT

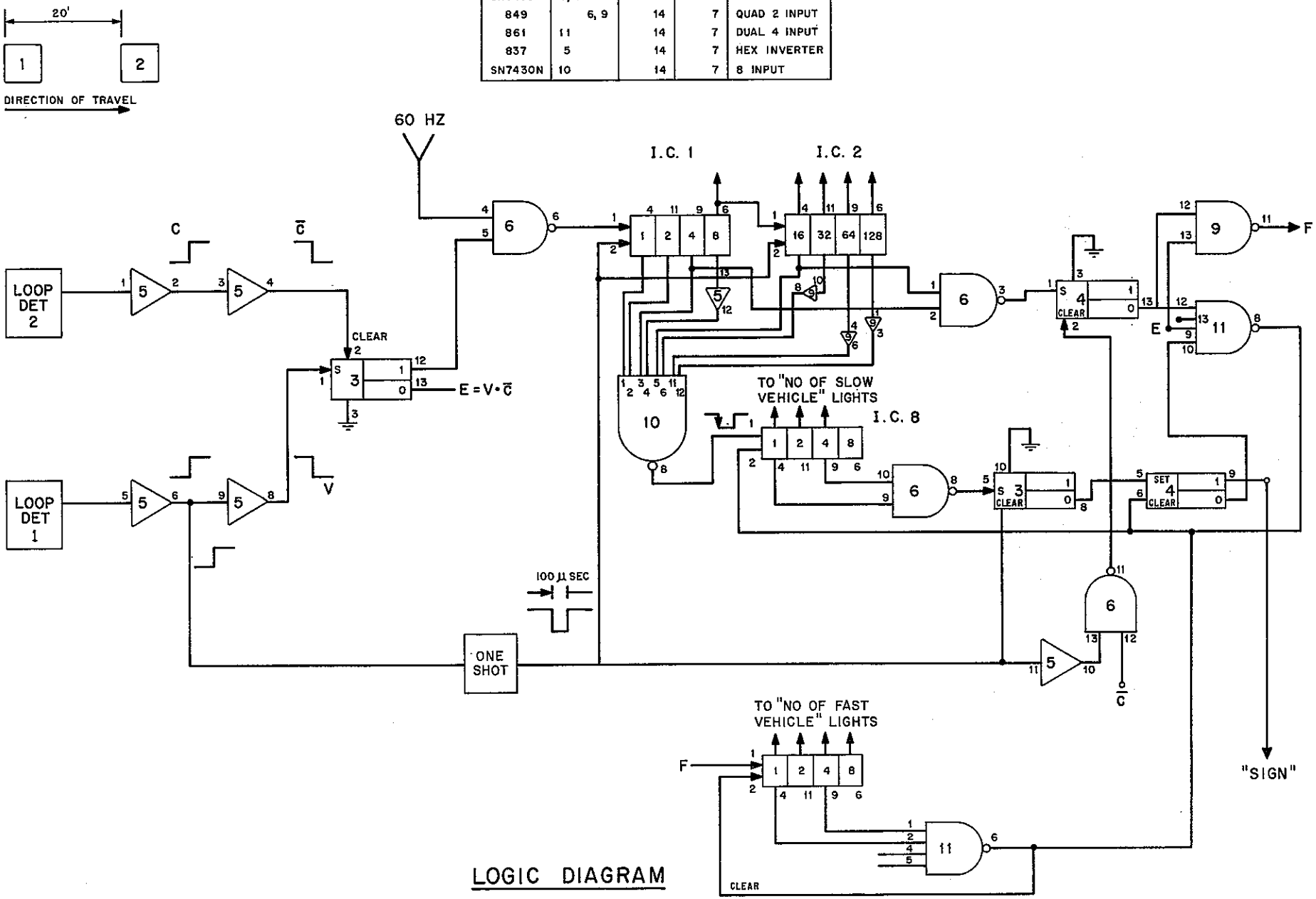

LOGIC DIAGRAM

Figure 2

ClibPDF - www.fastio.com

APPENDIX 2

The following pages contain a picture of the TDS equipment supplied for our evaluation and the specification for their equipment. The TDS equipment is capable of monitoring two lanes of traffic in one direction simultaneously.

ClibPDF - www.fastio.com

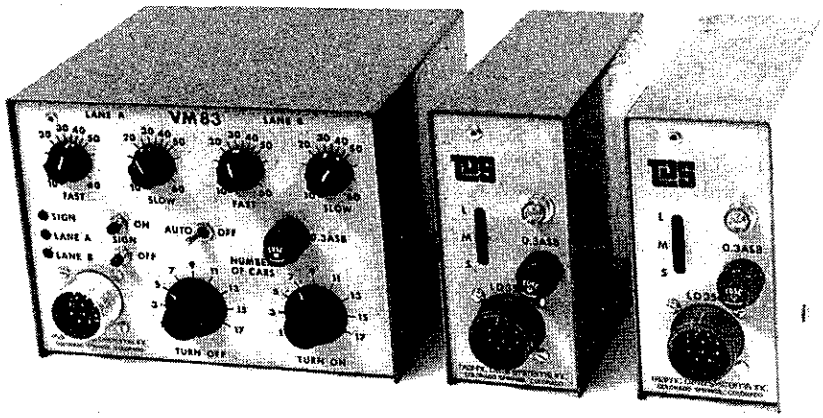

TRAFFIC DATA SYSTEMS VELOCITY MONITOR
AND TWO MODEL LD 356 LOOP DETECTORS

ClibPDF - www.fastio.com

P. O. BOX 3337, 100 EAST COMMERCE STREET
COLORADO SPRINGS, COLO. 80907 (303) 473-5210

SPECIFICATION

Velocity Monitor
Model VM 83

I. GENERAL

The VM 83 monitors vehicle velocity in one or two lanes. When a preselected number of slow vehicles pass through the detection zone, an output relay will close. This closure is normally used to illuminate a sign warning motorists of slow traffic ahead. Conversely, when a preselected number of fast vehicles pass through the detection zone, the output relay closure will be opened.

II. INPUTS

One or two pairs of loop detectors such as TDS LD356R-4 are used, depending upon whether one or two are instrumented. The turn-on characteristics of the detectors must match within 10 milliseconds. Detectors may be operated in either presence or pulse mode. A recommended loop is six feet by six feet by four turns of #12 AWG wire. The loops for each pair of detectors are spaced eleven feet from leading edge to leading edge. There is no restriction on the placement of the Lane A loops with respect to the Lane B loops.

III. OUTPUT

The relay output is a normally open, five ampere, 28 VDC or two ampere, 117 VAC contact which has a 500 VDC transient pulse rating. The contacts have a 0.1 microfarad capacitor in series with a 100 ohm resistor connected across them for transient load protection.

IV. SPEED SELECTION

Every car traversing a pair of loops will be classified as a slow, intermediate, or fast car. A car is slow if it is going less than the slow setting. It is fast if it is going faster than the fast setting. All other cars are intermediate. The speed selection is marked in miles per hour and is continuously variable between 10 and 60 mph. This allows errors in loop placement of up to one foot to be compensated. The speed selected will remain within ±2% throughout the temperature range. Independent fast and slow speed selections are provided for Lane A and for Lane B.

ClibPDF - www.fastio.com

V. NUMBER OF CARS.

The number of cars required to turn the output on and off are independently selectable. Any odd integer from 1 to 17, inclusive, may be selected.

VI. OPERATION LOGIC

All fast cars and slow cars from both lanes are counted in their respective fast and slow count registers. Intermediate cars are ignored. No coincident decoding is provided; however, each car is represented by a pulse only a few microseconds wide so the coincident error rate will be less than .001%. Each slow car resets the fast counter to zero and each fast car resets the slow counter to zero. The output turns on when the slow counter matches the number selected on the "turn on" switch. It remains on until the fast counter matches the number selected by the "turn off" switch.

VII. INDICATORS

Three indicators are provided to assist in setting up and checking out the VM 83. The one labeled "Sign" is illuminated whenever the logic indicates the sign should be on. The one labeled "Lane A" turns on when the first loop detector in Lane A places a call and turns off when the second detector in Lane A places a call. The Lane B indicator works in a similar manner.

VIII. CONTROLS

Pushbuttons are provided to force the sign control logic into the on or off state. After using a pushbutton, the VM 83 will follow its normal logic with no reset required. A toggle switch is provided to disable the output. With the toggle in the off position, the sign will remain off regardless of inputs. When the toggle is returned to the automatic position, the state of the sign is controlled by the VM 83 sign logic.

IX. CHARACTERISTICS

A. Electrical:	Voltage -- 117 ±22 VAC, 50/60 Hz Power -- 5 watts
B. Physical:	Dimensions -- 7.3"W x 5.25"H x 6.5"D Weight -- 6 lbs Temperature range -- -30°F to +160°F

ClibPDF - www.fastio.com

C. Inputs: Relay or NPN solid state switch closure from one or two pairs of loop detectors. The turn-on delay difference between the two detectors in a lane shall be less than 10 milliseconds.

D. Outputs: Relay contact rating -- 5 ampere, 28 VDC
-- or 2 ampere, 117 VAC

E. Connector: MS 3102A-18-1P
Mating connector (MS 3106A-18-1S) with cabling prewired for loop detectors, six feet long.

F. Ranges: Speed selection -- 10-60 mph continuously variable. Independently selectable for fast and slow for each of two lanes.
Number of Cars -- 1, 3, 5, ...17 cars. Independently selectable for turn-on and turn-off.

G. Indicators: Light emitting diodes -- indicates status of inputs and output.

H. Controls: Front panel switches to force the output on, off, or to disable the output.

All active components are solid state devices, with the exception of the output relay. All electronic components are mounted on a G-10 epoxy glass printed circuit board. The board is coated to prevent oxidation and best commercial production practices are used throughout. Only standard, commercially available components are used. A one-year warranty on parts and workmanship is provided.

Trans Lab Sacto 2-74 200

ClibPDF - www.fastio.com