ClibPDF - www.fastio.com

ClibPDF - www.fastio.com

TECHNICAL REPORT STANDARD TITLE PAGE

1. REPORT NO.	2. GOVERNMENT ACCESSION NO.	3. RECIPIENT'S CATALOG NO.

4. TITLE AND SUBTITLE	5. REPORT DATE
Application of Computer Data Processing Through Automated Data Collection	May 1973
	6. PERFORMING ORGANIZATION CODE 19103-762503-636394
7. AUTHOR(S) Donner, Robert L.; Welsh, Lawrence E.	8. PERFORMING ORGANIZATION REPORT NO. CA-HY-MR-6394-2-73-08
9. PERFORMING ORGANIZATION NAME AND ADDRESS Materials and Research Department California Division of Highways Sacramento, California 95819	10. WORK UNIT NO.
	11. CONTRACT OR GRANT NO. F-7-86
12. SPONSORING AGENCY NAME AND ADDRESS California Division of Highways Sacramento, California 95807	13. TYPE OF REPORT & PERIOD COVERED Final 1967-71
	14. SPONSORING AGENCY CODE

15. SUPPLEMENTARY NOTES

16. ABSTRACT

This is a report concerning the design, development and installation of an automatic data collection system. The system was developed at the Materials and Research Department to record data from 24 Terzaghi Consolidometers. The data is permanently recorded on digital magnetic tape for subsequent computer analysis. The system has been in operation for 14 months.

17. KEY WORDS	18. DISTRIBUTION STATEMENT
Computer, data processing, computer programming, automated data collection, data acquisition, Terzaghi consolidometer, digital magnetic tape, magnetic tape.	Unlimited

19. SECURITY CLASSIF. (OF THIS REPORT)	20. SECURITY CLASSIF. (OF THIS PAGE)	21. NO. OF PAGES	22. PRICE
Unclassified	Unclassified	29	

HMRT – 1242 (ORIG. 9/72)

ClibPDF - www.fastio.com

ClibPDF - www.fastio.com

STATE OF CALIFORNIA—BUSINESS AND TRANSPORTATION AGENCY

RONALD REAGAN, Governor

DEPARTMENT OF PUBLIC WORKS
DIVISION OF HIGHWAYS
MATERIALS AND RESEARCH DEPARTMENT
5900 FOLSOM BLVD., SACRAMENTO 95819

May 1973
F-7-86

Mr. R. J. Datel
State Highway Engineer

Dear Sir:

Submitted herewith is a research report titled:

APPLICATION OF COMPUTER DATA PROCESSING THROUGH

AUTOMATED DATA COLLECTION

R. L. Donner and L. G. Kubel
Co-Investigators

L. E. Welsh
Author

Assisted By
L. B. Alsop, J. E. Butts and L. Miller

Under the Supervision of
Wallace H. Ames, Principal Investigator

Very truly yours,

JOHN L. BEATON
Materials and Research Engineer

ClibPDF - www.fastio.com

ClibPDF - www.fastio.com

ACKNOWLEDGMENT

This research was performed under Research Project F-7-86 conducted in cooperation with the U.S. Department of Transportation, Federal Highway Administration.

The contents of this report reflect the views of the Transportation Laboratory which is responsible for the facts and the accuracy of the data presented herein. The contents do not necessarily reflect the official views or policies of the State of California or the Federal Highway Administration. This report does not constitute a standard, specification, or regulation.

The authors would like to acknowledge the excellent technical support of Leonard B. Alsop and Leslie Miller who contributed significantly to the success of this project.

ClibPDF - www.fastio.com

ClibPDF - www.fastio.com

TABLE OF CONTENTS

		Page
I.	INTRODUCTION	1
II.	CONCLUSIONS AND RECOMMENDATIONS	2
III.	IMPLEMENTATION	3
IV.	CENTRAL DATA RECORDING SYSTEM	4
V.	DISCUSSION	6

APPENDICES

A.	DETAILED CIRCUIT DESCRIPTION	A-1
B.	SUMMARY OF COSTS	B-1
C.	DATA SYSTEM RELIABILITY	C-1
D.	BENEFITS FROM IMPLEMENTATION OF CENTRALIZE DATA SYSTEM	D-1
E.	DIGITAL MAGNETIC TAPE FORMAT AND COMPUTER PRINT OUT	E-1
F.	COMPUTER PROGRAM	F-1
G.	TRANSDUCER DETAILS	G-1
H	OPERATING INSTRUCTIONS	H-1
I	FIGURES	I-1
J.	METHOD OF TEST FOR CONSOLIDATION OF SOILS	J-1

ClibPDF - www.fastio.com

ClibPDF - www.fastio.com

I. INTRODUCTION

The acquisition of data by manual means has become more expensive and less accurate than performing the same tasks by modern electronic techniques. This disparity will continually increase as the state-of-the-art in data acquisition continues to reduce costs by innovations in the data conversion and recording methods.

Recognizing the benefits to be derived from automatic reading and recording of data, the Materials and Research Department instigated this project to develop a central data acquisition system which could be of benefit to the laboratory as a whole rather than one subsection of the laboratory. All the sections in the laboratory are involved in performing routine testing of some sort. Many of these tests are of a quality control nature to assure continuing acceptability of materials used in highway maintenance and construction. Others are concerned with more basic investigations such as the corrosive effect of salt, used in de-icing, on bridge deck reinforcing bars or the compressibility of soils to be used as fill in a certain section of a freeway or highway.

The area we first chose to investigate was the consolidation area of our soils laboratory (ref. Appendix I). Traditionally, at least three men have been required to start and to carry to completion the consolidation tests on a group of samples of soil. The end result of their efforts would be a record of soil compaction vs. time. With this data at hand, a qualified individual (usually an engineer) would then take up to an hour to plot a curve of soil compressibility vs. time. From this curve a judgment would be made as to when total compaction occurred by observing the rate of change of slope of the curve with respect to time.

Using automatic data acquisition and recording techniques, it is quite easy to obtain higher data rates (meaning more data points) and thus achieve higher accuracy by being able to plot more points on a curve. The tedious job of plotting the curve can now be done automatically using the computer and a high-speed plotter.

ClibPDF - www.fastio.com

II. CONCLUSIONS AND RECOMMENDATIONS

The use of a Centralized System for Data Acquisition both in research and in routine testing is highly desirable. One advantage of a centralized system for data acquisition is the elimination of similar costly equipment in more than one area of the laboratory. Another is the reduction of the number of personnel needed to perform routine and research tests. Still another advantage is the capability of gathering much more data in less time with more accuracy and of storing the data permanently in digital form on magnetic tape.

ClibPDF - www.fastio.com

III. IMPLEMENTATION

Implementation of the results of this phase of the research project has been accomplished by the design, development, and installation of a central data acquisition and recording system.

This system could also record data from other areas in the Laboratory. An additional slow-speed scanner would utilize one of the available channels of the high speed scanner to record data. Other areas of the Laboratory to which the system could be applied include the corrosion group and the Chemistry Lab.

ClibPDF - www.fastio.com

IV. CENTRAL DATA RECORDING SYSTEM

The Central Data Recording System (CDRS) is comprised of a Digital Clock, High Speed Scanner, Frequency Counter, Incremental Magnetic Tape Unit, and System Control Electronics. The portion of the system that resides in the consolidation area consists of a Low Speed Data Scanner, Scan Control Electronics, Power Supply for the transducers, Voltage to frequency converter, and a frequency line driver (see block diagram, Figure 1).

Overall System Operation

The initiation of data taking, or a "scan", occurs when the digital clock sends a pulse through the scan control to the high speed scanner. The scan rate is selectable by a rotary switch on the scan control front panel. We can scan one channel only at one scan per second or up to 25 channels at either one scan per minute or one scan per hour. When a pulse from the scan control is received by the high speed scanner, it begins to scan its input channels. The first channel is time information from the digital clock; the second channel is the slow speed scanner and the third channel is manual data. The slow-speed scanner has the capability of scanning up to twenty-five data channels. Twenty-four of these data channels are used by the consolidation stations. The twenty-fifth channel is used to sample the transducer power supply and thus provides a means to monitor system accuracy and stability. If the output from channel 25 is found to be in excess of predetermined limits, the computer program will act to modify the data so that the resultant calculations and data plot are essentially correct.

The information from the digital clock and the manual data panel is sent to the high speed scanner as BCD (binary-coded decimal). The information from the slow speed scanner is in analog (d.c.) form. It is converted from analog to digital form in the V to F (voltage to frequency) converter. This frequency is then amplified and shaped in the frequency line-driver and transmitted to the frequency counter. Here the frequency is counted for a specified time (0.1 second). This counting of the frequency over a preselected time gives an average count of the input frequency; however, counting this frequency over some pre-selected time gives the integral of the input voltage to the V-F converter. By using the integral (or average) of the input voltage, any extraneous noise can be integrated (or averaged) out and thus a true reading can be obtained*.

*To convert the visual reading on the counter display to displacement in inches, use the formula: $d = \frac{(\text{Reading})}{10{,}000} \times 0.2''$

ClibPDF - www.fastio.com

From the counter a parallel BCD output representing the displacement of the consolidation sample is presented to the high speed scanner along with the appropriate channel identification information from the slow speed scanner. This information is then sent to the incremental digital magnetic tape recorder for permanent recording.

ClibPDF - www.fastio.com

V. DISCUSSION

The Central Data Recording System (CDRS) installation in the consolidation area of our soils laboratory is a successful demonstration of modern data acquisition and recording techniques. When this project was first conceived in 1967, it was an application of state-of-the-art electronics to relieve the tedium of routine, manual data recording.

In 1971 when the system was first placed into full-scale operation, it was no longer "state-of-the-art". Many newer refinements and more modern techniques have combined to make our CDRS rather mundane.

However, the fact remains that we have developed an accurate, reliable data acquisition and recording system. The CDRS gives our soils laboratory many more data points at a reduced cost plus the ability to do all data manipulation and plotting on a large-scale computer.

If we were to initiate this program now we would likely design the system with a mini-computer as the control unit. This would give us much greater flexibility in manipulating the data before recording on digital magnetic tape. We would be able to correct for zero drift or full scale drift plus the ability to convert the displacement into engineering units for easier analysis on the large computer.

ClibPDF - www.fastio.com

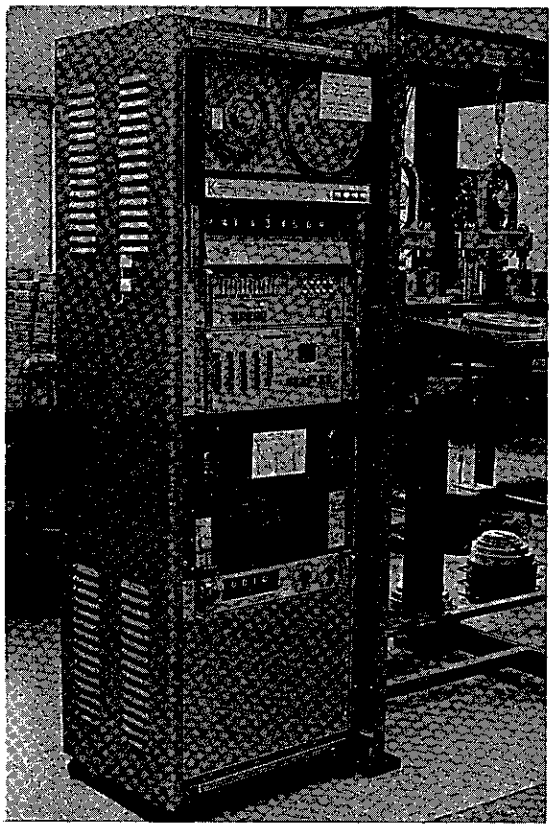

Data Acquisition System

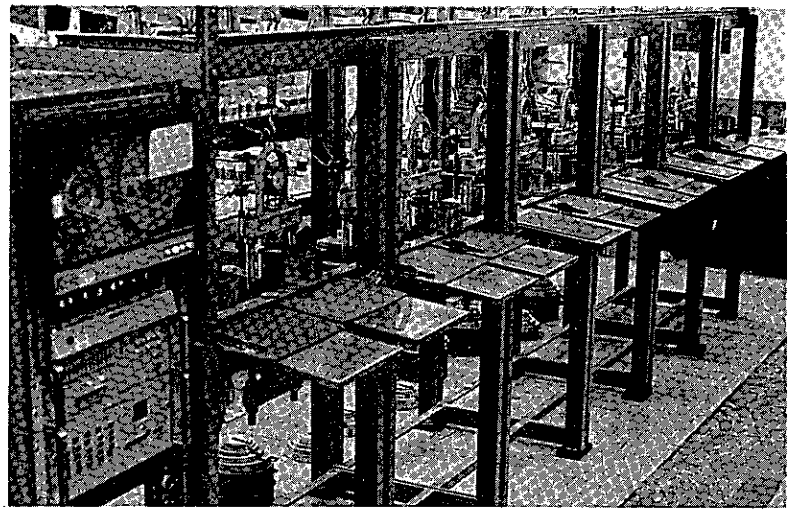

Installation in Foundation Section

ClibPDF - www.fastio.com

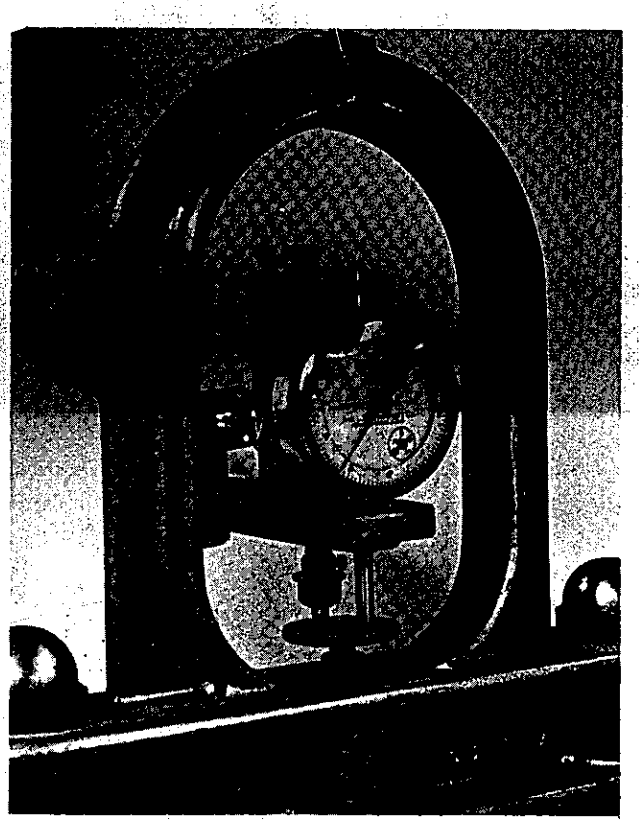

Front View of Dial Indicator with Transducer Behind

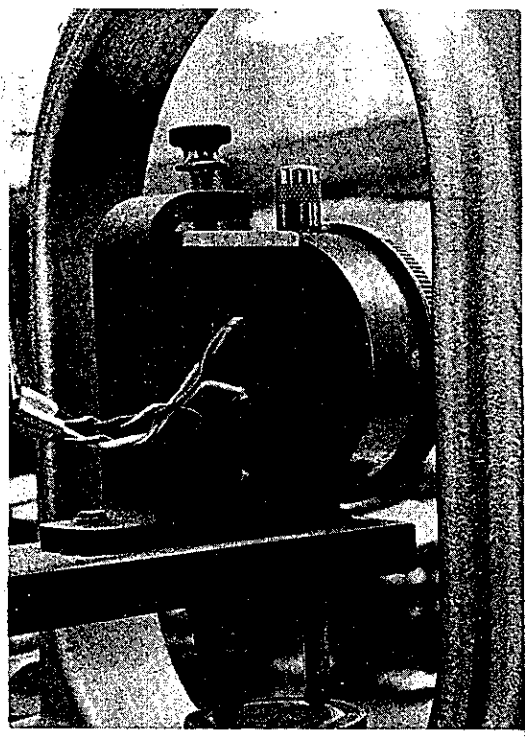

Side View Showing Transducer with Dial Indicator to the Right

ClibPDF - www.fastio.com

APPENDIX A

DETAILED CIRCUIT DESCRIPTION

1. Scan Control

a. The Scan Control Interface

A card (Figs. 2 and 3) controls the normally free running high speed scanner when data is available from any of the three sources*, and also controls the stepping of the slow speed scanner. The sequence is initiated by a pulse from the clock and proceeds until the operation is complete.

A 5 position manual selector switch controls the time period of each operation. This switch selects 3 types of operation: (1) "Hold" stops the system entirely, (2) "1 per second" is used in conjunction with the slow speed scanner in a manual operation mode as the scanner is advanced manually to one of its 25 channels. The 1/sec. clock pulse now initiates data readings from the clock and the selected slow speed scanner channel once each second, (3) 1/10 sec.,*** 1/min. and 1/hr. positions are used to record the clock data and then take a complete scan on the slow speed scanner, reading all selected channels. The 1/10 sec.*** position is not normally used for data acquisition but only for maintenance personnel to use for troubleshooting purposes.

2. Frequency Line Driver

(Physically located on scan control board.)

The purpose of this amplifier (Fig. 4) is to power the signal between the V-F converter and the frequency counter over long coaxial lines without significant line losses or degradation of the signal.

3. Automatic End-of-Record (EOR)

This interface board (Fig. 6) provides a means of generating an End-of-Record signal to the Kennedy magnetic tape drive**. The board contains a 4 state binary up counter (initially reset)

---

*0 - clock
1 - slow speed, 25 position scanner
2 - manual data entry panel

**The tape drive has a built-in circuit which, upon receiving a signal, automatically write 3/4" of blank tape which constitutes an "End-of-Record" gap.

***One reading every ten seconds.

ClibPDF - www.fastio.com

which counts once for every scan position recorded (12 characters) and generates a one-shot signal to the magnetic tape recorder after 16 scan positions have been recorded. This signal causes the tape recorder to generate an End-of-Record on tape. Thus each record on magnetic tape contains 192 characters (16 x 12 = 192).

This board also has a two stage amplifier which amplifies a tape drive "Gap in Progress" signal on its way to the coupler control board (Fig. 14) where it is an input to the "System Hold" circuit (Fig. 17).

4. End-of-Tape/Broken Tape

(Physically located on EOR Board.)

The purpose of this circuit (Fig. 7) is to alert the systems operator to two conditions which need operator intervention. The first is that the magnetic tape is approaching the end of the reel and will need a new reel of tape. The other is any condition which causes a lack of tape passing across the write head such as a broken tape or running off the end of the reel.

The input to this circuit is provided by the Kennedy magnetic tape drive circuitry.

5. Character Select Board

This board (Fig. 9) provides a means of varying the number of characters scanned and written on magnetic tape from each of the scanner positions*. On this system, all scanner positions provide 12 characters (some of which are blanks).

The board is merely 4 single pole double throw switches, each with a binary weighting (1, 2, 4, 8), such that when 12 characters are desired, the "one" and "two" switches will be in the off position and the "four" and "eight" switches will be on.

The board provides a path for both states of the outputs of the coupler control board's character counter. The board's output feeds a 4 input "and" gate which will only have an output when the counter has stepped the number of times represented by this board's switch setting. At that time the counter is reset and character transmission to the magnetic tape driver is stopped.

*Scanning of each character is necessary since there are nominally 12 characters available from each scanner position, and the magnetic tape must write these characters serially.

ClibPDF - www.fastio.com

6. Driver 1

This card (Fig. 10) contains a four input amplifier and level setter. It receives pulses from the binary character up-counter (4 lines), sets their levels, and outputs true and false levels to the "BCD to 12-line converter" card.

7. Driver 2

This card (Fig. 11) contains a four input amplifier and level setter. It receives the four BCD lines from the "Data Gate" output and drives the Write Amplifier of the Kennedy tape drive.

8. Data Gate

This card (Fig. 12) (2 required) is used to sample the 12 characters of data (48 lines) from the High Speed Scanner output. It utilizes the twelve (BCD→ 12 line) pulses to sequentially sample the 4 lines of BCD information from each character. Thus there are a total of 48 AND gates, 4 of which are sampled simultaneously. (These four lines are the 1, 2, 4, and 8 lines for each BCD character.)

9. BCD to 12 Line

The purpose of this board (Fig. 13) is to translate the output of the coupler control's character counter from binary (4 Positions, 1, 2, 4, and 8) to twelve lines, each of which becomes activated in sequence. These twelve lines then activate the twelve positions of the data gates in sequence.

10. Coupler Control Board

The purpose of the magnetic tape coupler control board (Fig. 14) is to:

1. Provide the record command signal to the Kennedy recorder.
2. Count the number of characters in each recorded word.
3. Provide a count pulse to the EOR counter.
4. Provide a system hold command to the high speed scanner.

The Kennedy record command is a train of pulses, the number of pulses determined by the number of characters to be recorded at one reading. The number of characters and thus the number of pulses is selectable from zero to fifteen by the switches on the "Character Select" board. The system is usually set to record 12 characters per word.

ClibPDF - www.fastio.com

The record command pulse train is generated by a gated free running multivibrator. The multivibrator triggers a "one shot" whose output is buffered by several inverter stages to provide the pulse train which is finally used to time data into the write amplifiers of the Kennedy recorder.
The gate of the free running multi is a two input "NOR" gate. One input is controlled by a flip-flop and the other by a reset pulse which occurs after the desired number of characters have been recorded. The free running multi is turned off by either of these two inputs. Both inputs must be at the proper state for the free running multi to be turned on.

The input flip-flop is triggered by a print command from the high speed scanner. One output turns on the free running multi as stated above. The other output sends a system hold to the high speed scanner to stop the high speed scanner while data is being recorded.

In addition to providing the print command pulse train to the Kennedy recorder, the gated free running multi also provides input pulses to a counter which determines the number of characters in each word. The output of this counter is controlled by the character select board switches. As the counter reaches the desired number of characters, the counter output is used to provide a reset pulse to the "NOR" gate controlling the free running multi, thus shutting off the free running multi until another print command is received.

ClibPDF - www.fastio.com

APPENDIX B

SUMMARY OF COSTS

Purchased Equipment

EECO	915A	Digital Clock	$ 2,800
Hewlett/Packard	801C	D.C. Power Supply	151
	2212A	Voltage to Frequency Converter	1,200
	2515A	High Speed Digital Scanner	5,405
	2901A	Input Scanner	2,575
	5512A	Electronic Counter	1,050
Kennedy	1400H	Incremental Digital Magnetic Tape Recorder	3,750
Linear Potentiometers			1,632
Fixtures to support the potentiometers			2,400
Electrical Connectors			240
TOTAL			$21,203

Interface equipment designed and developed by the Materials and Research Department personnel. These prices reflect component and assembly costs only. They do not include any engineering design costs.

Power Supply	$ 54
Scan Control and Frequency-Line Driver	31
Hold Amplifier	12
DAS Control (Mag. Tape Coupler and Control)	35
Automatic EOR and EOT/Broken Tape Sensor	38
Driver 1 (Control to B.C.D. Converter)	27
Driver 2	14
B.C.D. to 12 Line Converter	18
Data Gates (2 required)	23
Character Select	8
TOTAL	$ 260

ClibPDF - www.fastio.com

APPENDIX C

DATA SYSTEM RELIABILITY

The use of silicon transistors and diodes in the discrete circuitry designed by the Materials and Research Laboratory together with adequate design margins assures a long trouble-free life for the interface components. Where we found it desirable, integrated circuits were used to implement the desired functions in place of discrete components. The integrated circuits, when used within their temperature and loading specifications are highly reliable components and provide years of trouble-free life.

The purchased instruments are all well-designed systems components from reputable manufacturers who have been in the instrument and system design market for many years.

The MTBF data from the manufacturer's data sheets are listed below. From the data given the estimated MTBF should be at least 10,000 hours. The complete system has been operational for almost three years although it has not been in use full time as the data reduction program was not completed. At the present time we have been in continuous operation for 20 months (over 14,000 hours) without any system problems.

MTBF of counter	10,000 hours
MTBF of Lo speed scanner 2901A	17,000 hours
MTBF of Hi speed scanner 2515A	13,000 hours
MTBF of Clock	15,000 hours
MTBF V→ F converter	10,000 hours
MTBF of Pur. supply	20,000 hours

ClibPDF - www.fastio.com

APPENDIX D

BENEFITS FROM IMPLEMENTATION OF CENTRALIZED DATA SYSTEM

With the ability to sample and record data and time at one second intervals the accuracy of the graphic plots of consolidation has increased manyfold. The "time-to-consolidation" can be determined more accurately from both the plot and the data recorded on digital magnetic tape. In addition a number of technicians and/or engineers have been relieved of the tedious task of plotting the curves by manual methods. These indeed are significant benefits and in addition the central data acquisition system does not require as many personnel to perform the tests as were needed previously.

The use of the CDRS has resulted in a savings of 32 man hours per week in a normal work week. This is a dollar savings of $534.08 per week. Under a heavy work load situation, the CDS saves 42 man hours per week, resulting in a savings of $700.98 per week.

ClibPDF - www.fastio.com

APPENDIX E

DIGITAL MAGNETIC TAPE FORMAT AND COMPUTER PRINT-OUT

There are four General Word Formats (a word refers to 12 numeric BCD characters. With the exception of "end of file," all entries on magnetic tape are in word format).

1. Beginning of test entry (manually entered data)

1	2	3	4	5	6	7	8	9	10	11	12
Channel or Cons. Mach. No. (1 - 24)		Load No.		Job No.		Boring No.		Sample No.		Tube No.	

2. End of test entry (manually entered data)

1	2	3	4	5	6	7	8	9	10	11	12
End of Test ID. No. = 44 (always)		Channel or Cons. Mach. No.		bl	bl	bl	bl	bl	bl	bl	bl

Blanks

3. Time entry (automatically entered at appropriate times)

1	2	3	4	5	6	7	8	9	10	11	12
Time ID. = 77 (always)		bl		Julian Day		Hour		Minute		Second	

Blank

4. Consolidation Data Entry

1	2	3	4	5	6	7	8	9	10	11	12
Data Entry ID. (always =33)		bl	Channel or Mach. No. (1-24)		bl		5 digits of data				

A normal tape consists of a quantity of tape records, each consisting of 16 of the various words described above. Each record is followed by a 3/4 inch inter-record gap.

The last data record on tape will consist of from one to sixteen words since the number of samples varies. This last record will be followed by 2 "end of file" marks to signify the end of information on this tape.

There is no necessary sequence of record types except that a beginning of test word always preceeds data for a particular test; "end of test" on a particular unit must preceed further tests on that unit; and 2 "end of files" must end the tape.

ClibPDF - www.fastio.com

The following page E-3 is a "dump" of the information written on magnetic tape. The information was read from magnetic tape and printed out to show the manner in which data is recorded on the digital magnetic tape.

Page E-4 is the form in which the data from a completed test is sent back to the Foundation Section.

Page E-5 is a plot of the data for a complete test.

ClibPDF - www.fastio.com

```
770243081258330040006863770243081259330040006862770243081300330040006862770243081301
330040006863770243081302330040006862770243081303330040006862770243081304330040006863
770243081305330040006862

770243081306330040006863770243081307330040006863770243081308330040006863770243081309
330040006863770243081310330040006863770243081311330040006863770243081312330040006863
770243081313330040006863

770243081314330040006863770243081315330040006863770243081316330040006862770243081317
330040006862770243081318330040006863770243081319330040006863770243081320330040006862
770243081321330040006863

770243081322330040006863770243081323330040006862770243081324330040006862770243081325
330040006862770243081326330040006863770243081327330040006862770243081328330040006862
770243081329330040006862

770243081330330040006863770243081331330040006863770243081332330040006863770243081333
330040006863770243081400330010004134330020005054330030008536330040006862330250010004
770243081500330010004134

330020005055330030008537330040006862330250010003770243081600330010004135330020005056
330030008538330040006863330250010004770243081700330010004136330020005057330030008537
330040006862330250010004

770243081800330010004137330020005059330030008537330040006862330250010004330010004137
330010004138330030008537330050003727330050003727330050003727051451415011330050003727
051451415011770243081900

330050003728770243081901330050003729770243081902330050003729770243081903330050003729
770243081904330050003729770243081905330050003728770243081906330050003728770243081907
330050003728770243081908

330050003729770243081909330050003728770243081910330050003729770243081911330050003729
770243081912330050003728770243081913330050003729770243081914330050003729770243081915
330050003729770243081916

330050003729770243081917330050003729770243081918330050003729770243081919330050003729
770243081920330050003728770243081921330050003729770243081922330050003729770243081923
330050003729770243081924

330050003729770243081925330050003729770243081926330050003729770243081927330050003729
770243081928330050003729770243081929330050003729770243081930330050003729770243081931
330050003729770243081932

330050003729770243081933330050003729770243081934330050003729770243081935330050003729
770243081936330050003729770243081937330050003729770243081938330050003729770243081939
330050003729770243081940

330050003729770243081941330050003729770243081942330050003730770243081943330050003729
770243081944330050003729770243081945330050003729770243081946330050003729770243081947
330050003729770243081948

330050003729770243081949330050003730770243081950330050003729770243081951330050003729
770243081952330050003729770243081953330050003729770243081954330050003729770243081955
330050003730770243081956

330050003730770243081957330050003729770243081958330050003730770243081959330050003729
770243082000330050003729770243082001330050003729770243082002330050003729770243082003
330050003729770243082004

330050003729770243082005330050003730770243082006330050003729770243082007330050003730
770243082008330050003729770243082009330050003729770243082010330050003729770243082011
330050003729770243082012

330050003729770243082013330050003729770243082014330050003730770243082015330050003730
```


ClibPDF - www.fastio.com

AUG. 31, 1972 *** CONSOLIDATION-TEST REPORT ***

TEST IDENTIFICATION :	MACH.	LOAD	JOB	BORING	SAMPLE	TUBE	BASE TIME: DAY	HR	MIN	SEC
	17	28	495	09	05	2	230	09	06	00

TIME HRS	MIN	SEC	DIAL ADJUSTED	DIAL INCHES	VOLTAGE READING
00	00	00	15198	.3039	10011
00	00	01	15199	.3039	10011
00	00	02	15298	.3059	10011
00	00	03	15315	.3063	10011
00	00	04	15335	.3067	10011
00	00	05	15350	.3070	10011
00	00	06	15362	.3072	10011
00	00	07	15369	.3073	10011
00	00	08	15373	.3074	10011
00	00	09	15383	.3076	10011
00	00	12	15407	.3081	10011
00	00	18	15443	.3088	10011
00	00	24	15478	.3095	10011
00	00	30	15519	.3103	10011
00	00	40	15551	.3110	10011
00	00	48	15582	.3116	10011
00	01	00	15617	.3123	10011
00	01	12	15655	.3131	10011
00	01	30	15721	.3144	10011
00	02	00	15802	.3160	10011
00	03	00	15928	.3185	10012
00	04	00	16029	.3205	10012
00	06	00	16199	.3239	10011
00	08	00	16323	.3264	10011

TIME HRS	MIN	SEC	DIAL ADJUSTED	DIAL INCHES	VOLTAGE READING
00	10	00	16429	.3285	10011
00	15	00	16611	.3322	10011
00	20	00	16736	.3347	10011
00	25	00	16844	.3368	10011
00	30	00	16894	.3378	10011
00	35	00	16950	.3390	10010
00	40	00	17003	.3400	10011
00	45	00	17033	.3406	10011
00	50	00	17062	.3412	10010
00	55	00	17086	.3417	10011
01	00	00	17102	.3420	10010
02	54	00	17317	.3463	10011
03	54	00	17372	.3474	10011
04	54	00	17412	.3482	10012
05	54	00	17447	.3489	10013
06	54	00	17474	.3494	10014
07	54	00	17492	.3498	10014
22	31	00	17587	.3517	10011

	INITIAL	24-HOUR	TOT. CONSL.
DIAL READINGS :	.3039	.3517	.0477

END CONSOLIDATION TEST REPORT.

ClibPDF - www.fastio.com

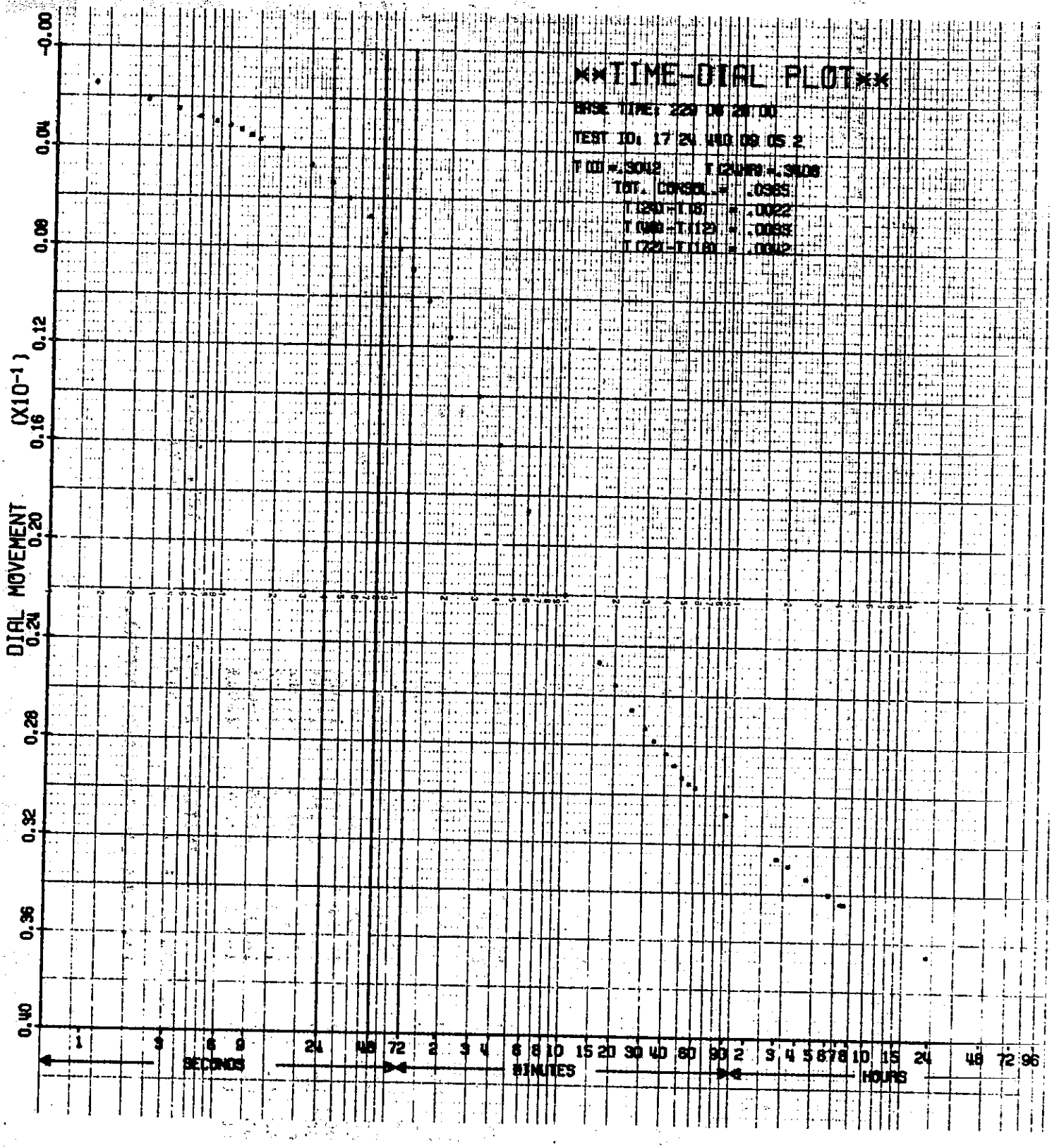

ClibPDF - www.fastio.com

APPENDIX F

COMPUTER PROGRAM

The flow charts on the next two pages show how the IBM 360/65 is programmed to handle the consolidation data. The flow chart titled "Soil Consolidation-Normal Processing" shows how the data is handled when no errors are detected in the data or due to faulty magnetic tape. The flow chart title "Soil Consolidation-Error Correction Processing" shows how the data is handled when errors are detected.

The programming language used is COBOL.

The flow charts and the source listing of the ENG040 program are lengthy and quite voluminous. These items are available upon request and we will be happy to provide assistance as needed.

ClibPDF - www.fastio.com

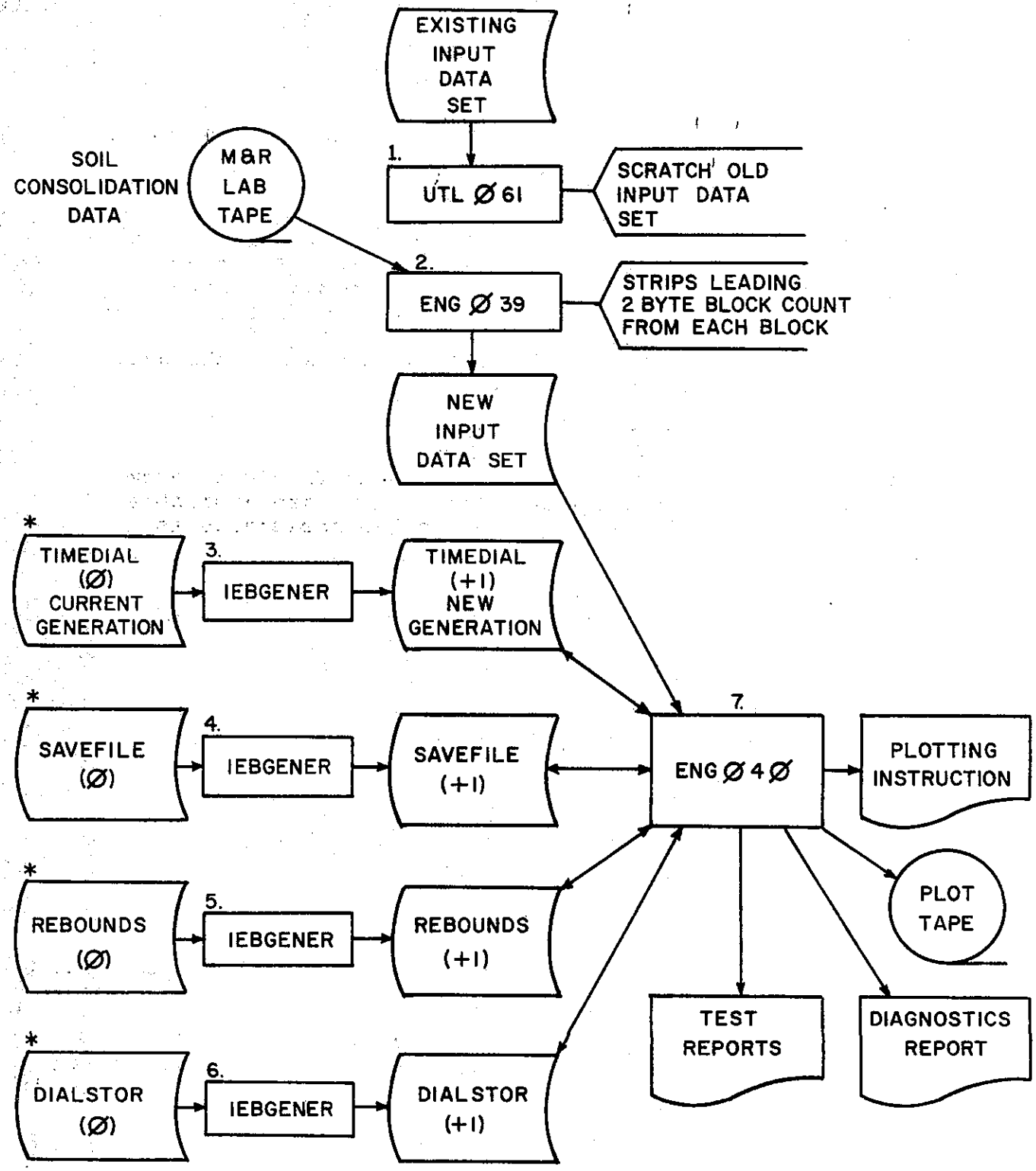

*GENERATION DATA SETS OF MASTER FILES

NOTE: AFTER SUCCESSFUL PROCESSING THE (+1) GENERATIONS BECOME (Ø) AND THE (Ø) BECOMES (−1).

SOIL CONSOLIDATION - NORMAL PROCESSING

ClibPDF - www.fastio.com

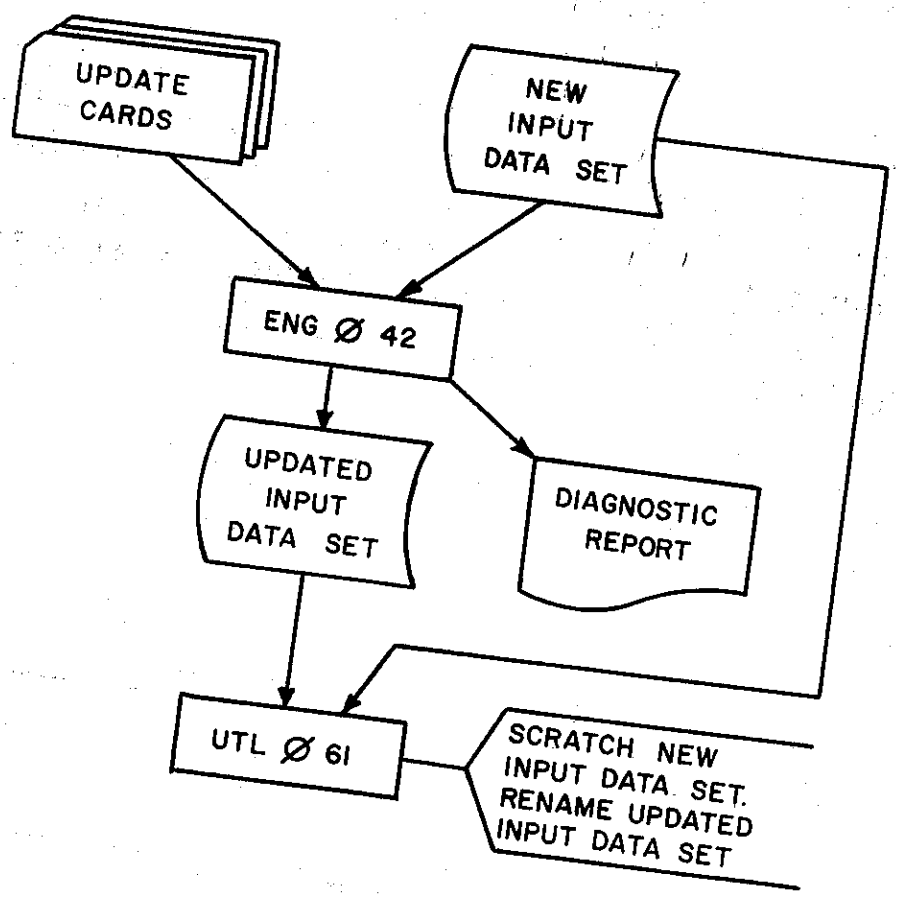

NOTE: STEP 3 THRU 7 ARE THE SAME AS NORMAL PROCESSING, EXCEPT THE UPDATED INPUT DATA SET IS USED AS INPUT DATA SET.

SOIL CONSOLIDATION - ERROR CORRECTION PROCESSING

ClibPDF - www.fastio.com

TRANSDUCER DETAILS

THE TRANSDUCER SHOWN SCHEMATICALLY BELOW IS A LINEAR MOTION FILM POTENTIOMETER. IT HAS A 1/2 INCH STROKE, A TOTAL RESISTANCE OF 5,000 OHMS, AND A NON-LINEARITY OF ONLY 1%. PHOTOGRAPHS OF THE TRANSDUCER, AS INSTALLED, ARE SHOWN ON THE NEXT PAGE.

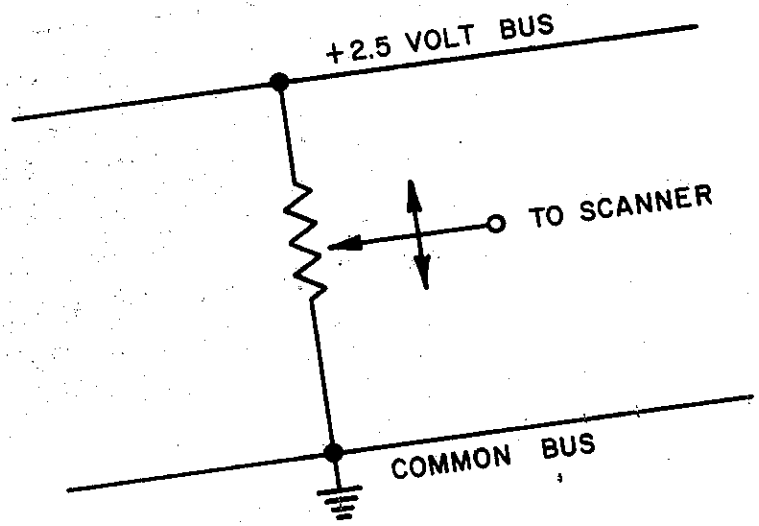

TYPICAL TRANSDUCER

ClibPDF - www.fastio.com

APPENDIX H

System Component	OPERATING INSTRUCTIONS (Cold Start)
	1. Before applying power to system:
Cons.	A. Place consolidation switch in "HOLD"
Tape Recorder	B. Turn tape drive power "OFF".
Tape Recorder	C. Load tape.
Power Plug	2. Apply power to system. Make sure the following components have power on:
	A. Digital clock.
	B. DAS control box.
	C. High speed scanner.
	D. Slow speed scanner.
	E. Cons. control box.
	F. Frequency counter.
Tape Recorder	Tape drive power should be "OFF".
Tape Recorder	3. Turn "ON" tape drive power.
Tape Recorder	4. Briefly push "LOAD FORWARD" to start reel drive motors.
DAS	5. Turn "ON" End/Broken tape sensor.
DAS	6. Push EOR reset.
Tape Recorder	7. Push and hold "LOAD FORWARD". Release when "FILE GAP" light comes on.
Digital Clock	8. Reset "POWER FAILURE" light.
Digital Clock	9. Set "ARM-PRESET" to PRESET".
Digital Clock	10. Push "ACCUMULATOR".
Digital Clock	11. Set time 15 seconds ahead of actual time.
Digital Clock	12. Set "ARM-PRESET" to "ARM".
Digital Clock	13. Press "START" when actual time agrees with set time.
High Speed Spanner	14. Push "START/ADVANCE". Let system warm up for 24 hours.

ClibPDF - www.fastio.com

System Component	OPERATING INSTRUCTIONS (Calibration)
Cons.	15. After 24 hour warm up, switch V/F converter to "ZERO".
Cons.	16. Make zero adjustment on V/F converter so that frequency counter reads 000.00 KHz.
Cons.	17. Switch V/F converter to "+ CAL".
Cons.	18. Make "+ CAL" adjustment on V/F converter so that frequency counter reads 100.00 KHz.
Cons.	19. Switch V/F converter to "1".
Low Speed Scanner	20. Push "MANUAL".
Low Speed Scanner	21. Push channel 25 switch.
Low Speed Scanner	22. Advance to channel 25 by pressing "STEP".
Cons.	23. Make power supply "FINE" adjustment so that frequency counter reads 100.00 KHz.

ClibPDF - www.fastio.com

System Component	OPERATING INSTRUCTIONS (To Take Readings on Samples)
Cons.	1. Place consolidation switch in "HOLD".
	2. Set sample in consolidometer.
Low Speed Scanner	3. Press channel number corresponding to consolidometer number.
Low Speed Scanner	4. Press "MANUAL".
Low Speed Scanner	5. Advance to channel selected by pressing "STEP".
	6. Adjust zeroing screw on consolidometer so that frequency counter reads 200 Hz.
High Speed Scanner	7. Set manual data switches (refer to data format page).

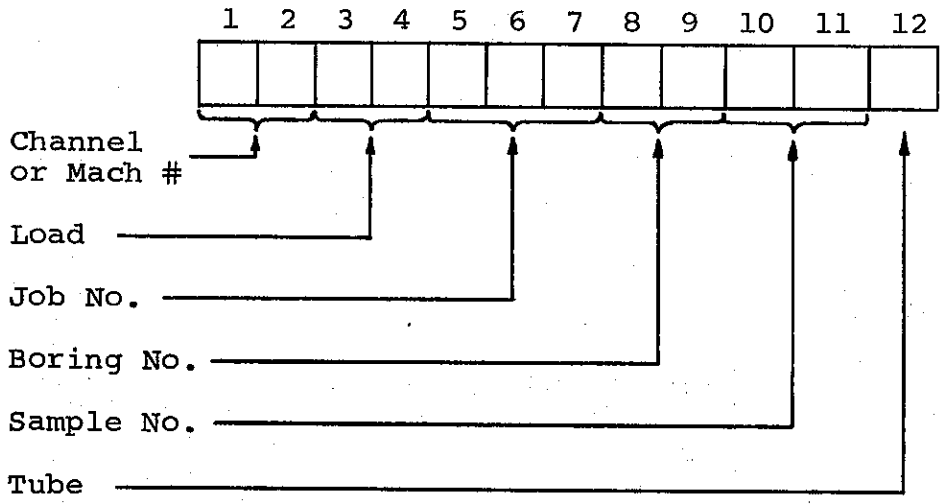

High Speed Scanner	8. Push "MANUAL ENABLE" to write data on tape.
High Speed Scanner	9. Release "MANUAL ENABLE".
High Speed Scanner	10. Push "START ADVANCE".
Cons.	11. When ready to apply initial load, turn consolidation switch to "1/Sec.".

ClibPDF - www.fastio.com

12. After several seconds as required apply initial load.

Cons.

13. After several minutes as required, turn consolidation switch to "HOLD".

Low Speed Scanner

14. Push "RESET" until no channel numbers are indicated.

Low Speed Scanner

15. Push "SINGLE SCAN".

Cons.

16. Turn consolidation switch to "1/MIN". Take as many readings as required.

Cons.

17. If no other samples are to be tested, turn consolidation switch to "1/HR" for as long as required.

18. If additional samples are to be tested, repeat Steps 1 through 16 for each sample before going to Step 17.

19. To end a test, enter:

Manual data:

1	2	3	4	5	6	7	8	9	10	11	12
4	4			b	b	b	b	b	b	b	b

Blanks - not read

Channel or Machine No.

End of Test Ident.

ClibPDF - www.fastio.com

System Component	OPERATING INSTRUCTIONS (To Install Another Tape to Continue Readings)
Cons.	1. Place consolidation switch in "HOLD".
	2. Load tape.
	3. Repeat cold start instructions 4 through 7
Cons.	4. Return consolidation switch to appropriate position.

System Component	OPERATING INSTRUCTIONS (To End a Tape)
Cons.	1. Place consolidation switch in "HOLD".
Tape Recorder	2. Depress "FILE CAP".
	2A. Turn off End/Broken tape sensor.
Tape Recorder	3. Depress "REWIND".
Tape Recorder	4. Remove tape.
	5. LABEL TAPE.

ClibPDF - www.fastio.com

Figure I

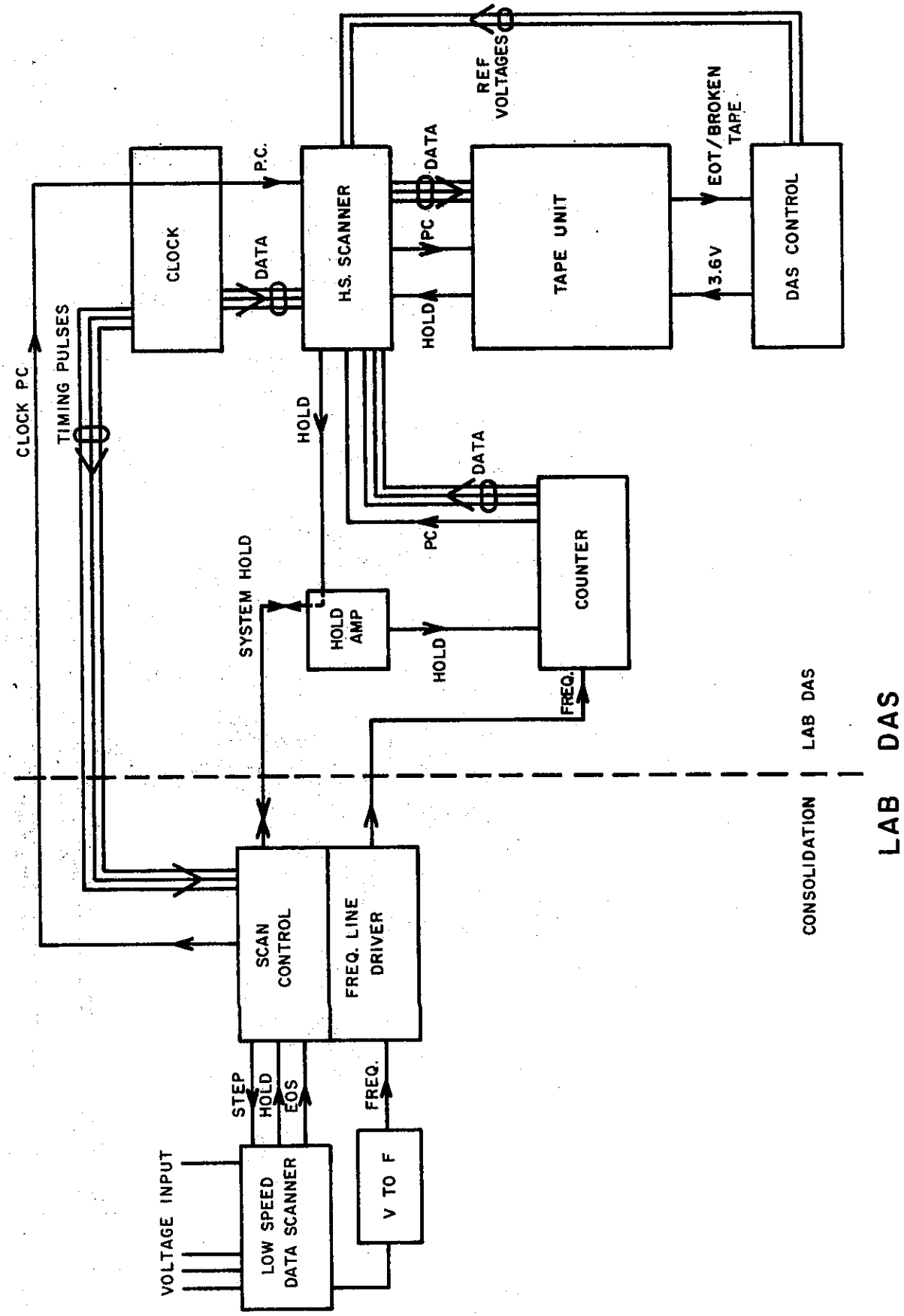

ClibPDF - www.fastio.com

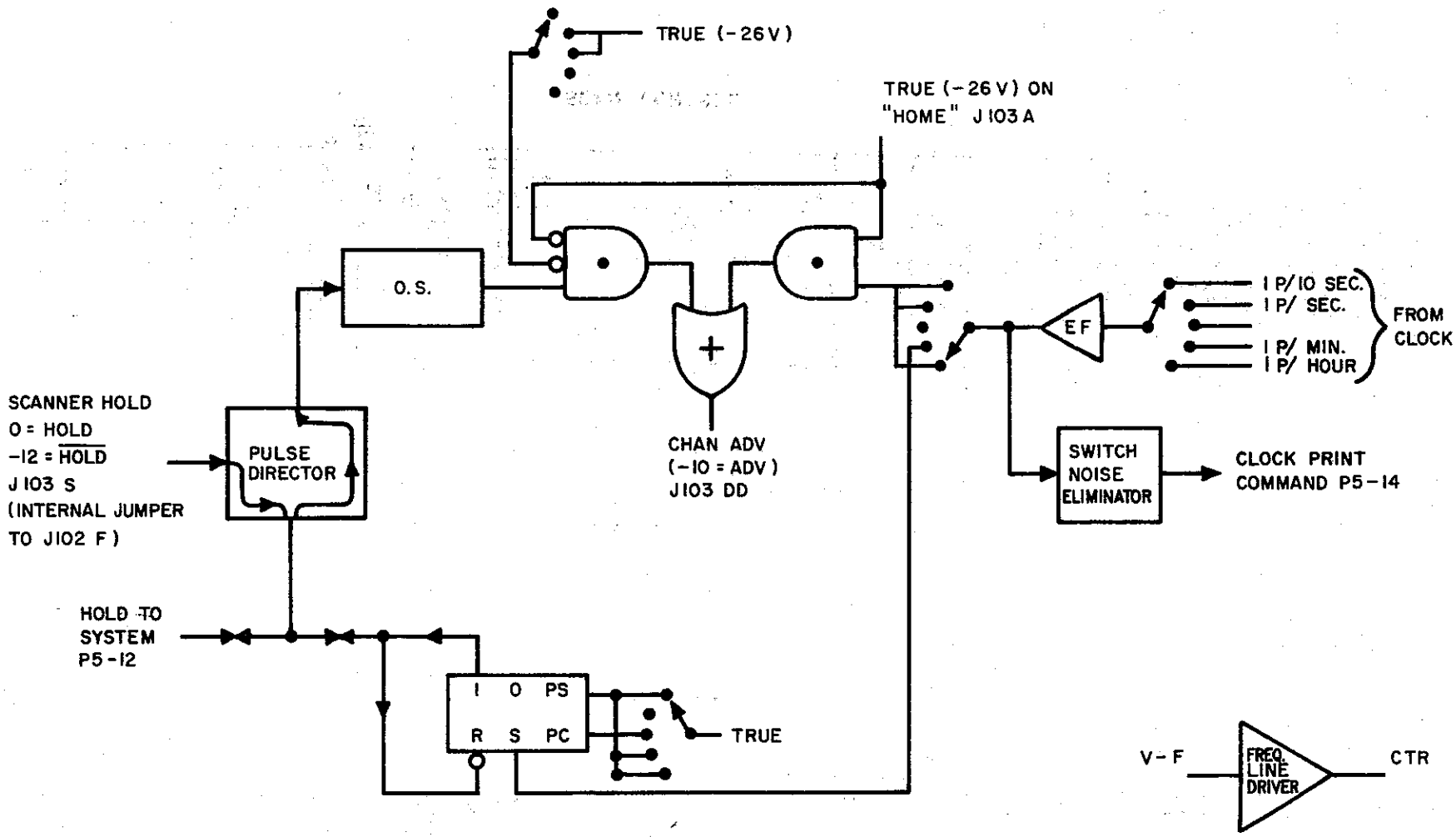

SCAN CONTROL

Figure 2

ClibPDF - www.fastio.com

Figure 3

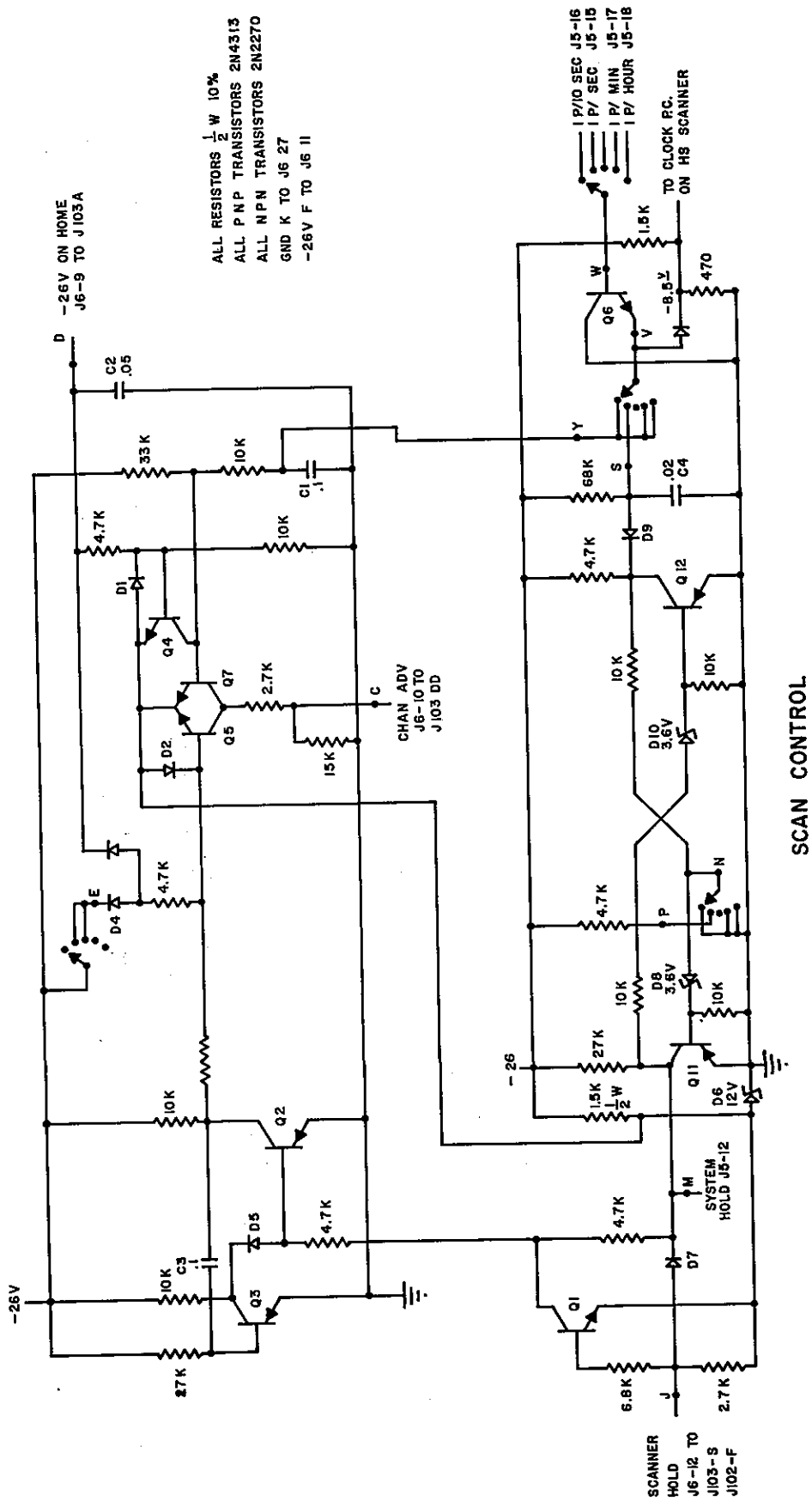

ClibPDF - www.fastio.com

Figure 4

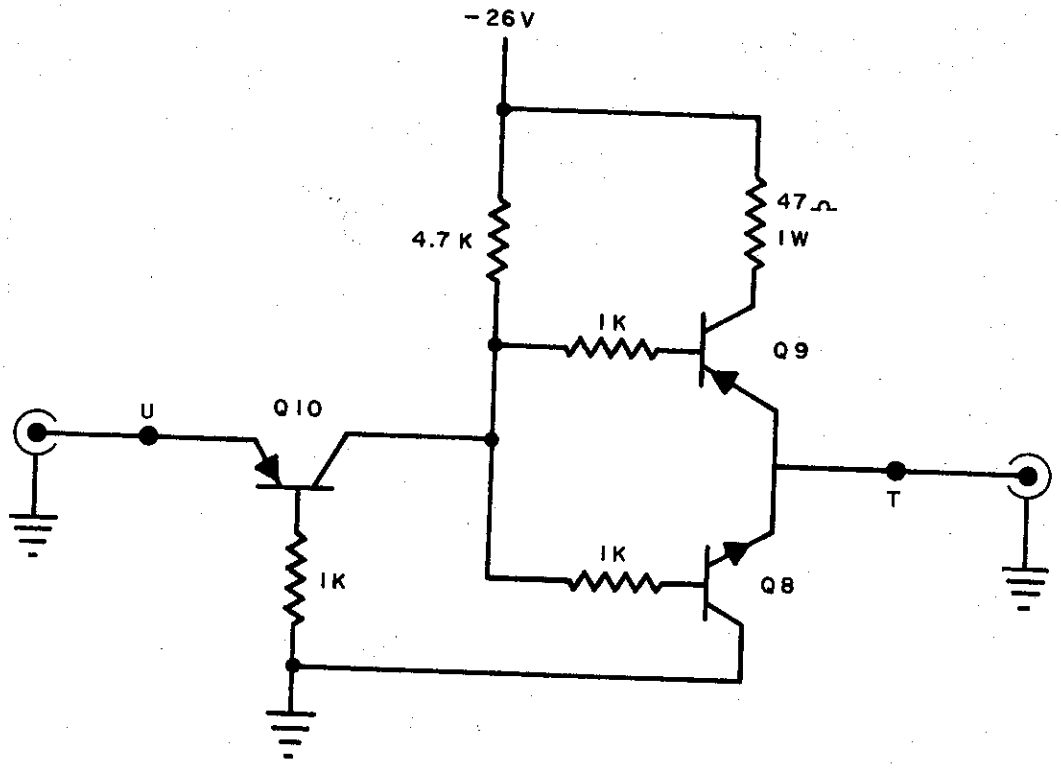

ALL RESISTORS $\frac{1}{4}$W 10% EXCEPT AS NOTED
PNP TRANSISTORS 2N4314
NPN TRANSISTORS 2N2270

FREQUENCY LINE DRIVER
(ON SCAN CONTROL BOARD)

ClibPDF - www.fastio.com

Figure 5

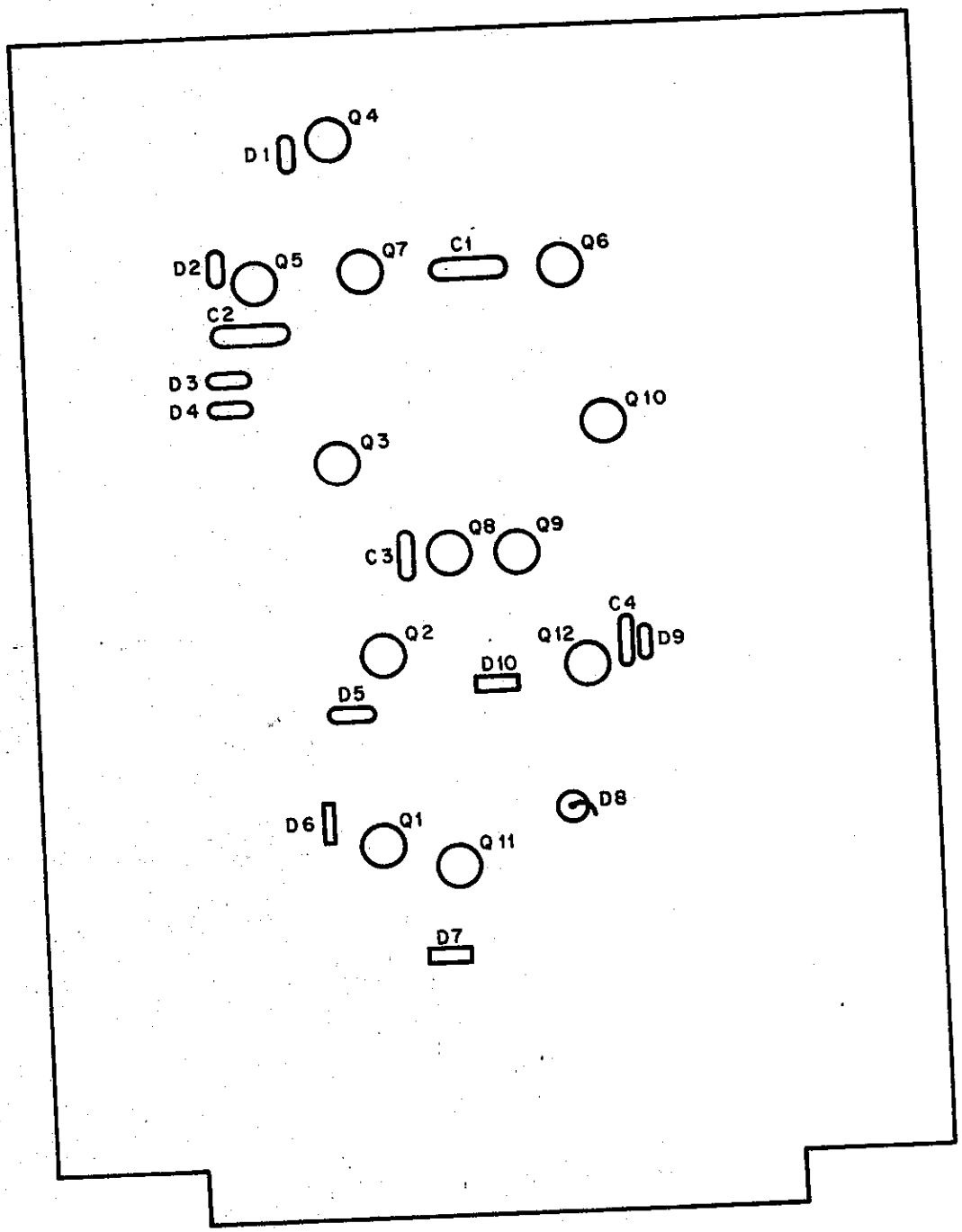

SCAN CONTROL &
FREQUENCY LINE DRIVER

ClibPDF - www.fastio.com

ClibPDF - www.fastio.com

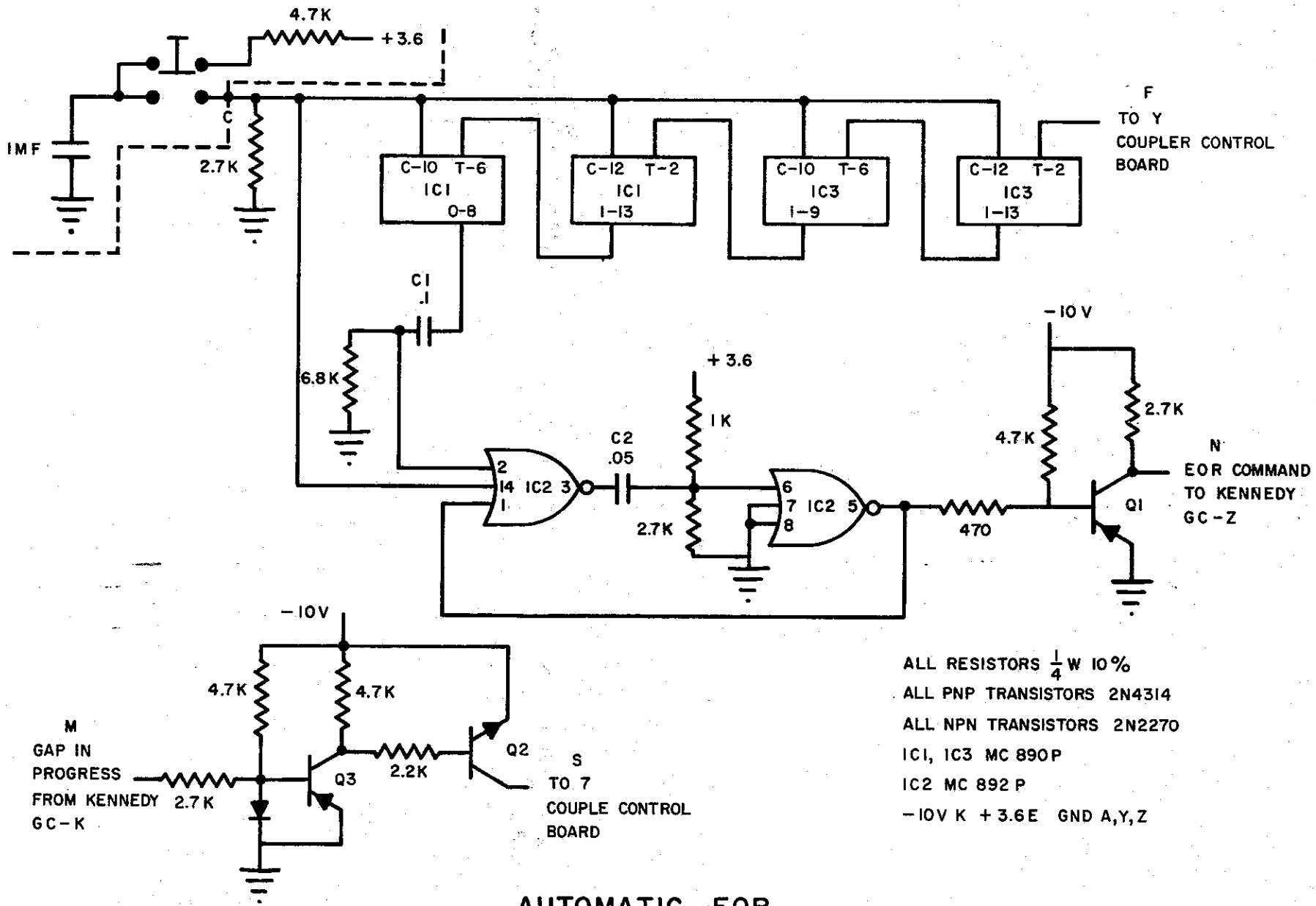

AUTOMATIC EOR

Figure 6

Figure 7

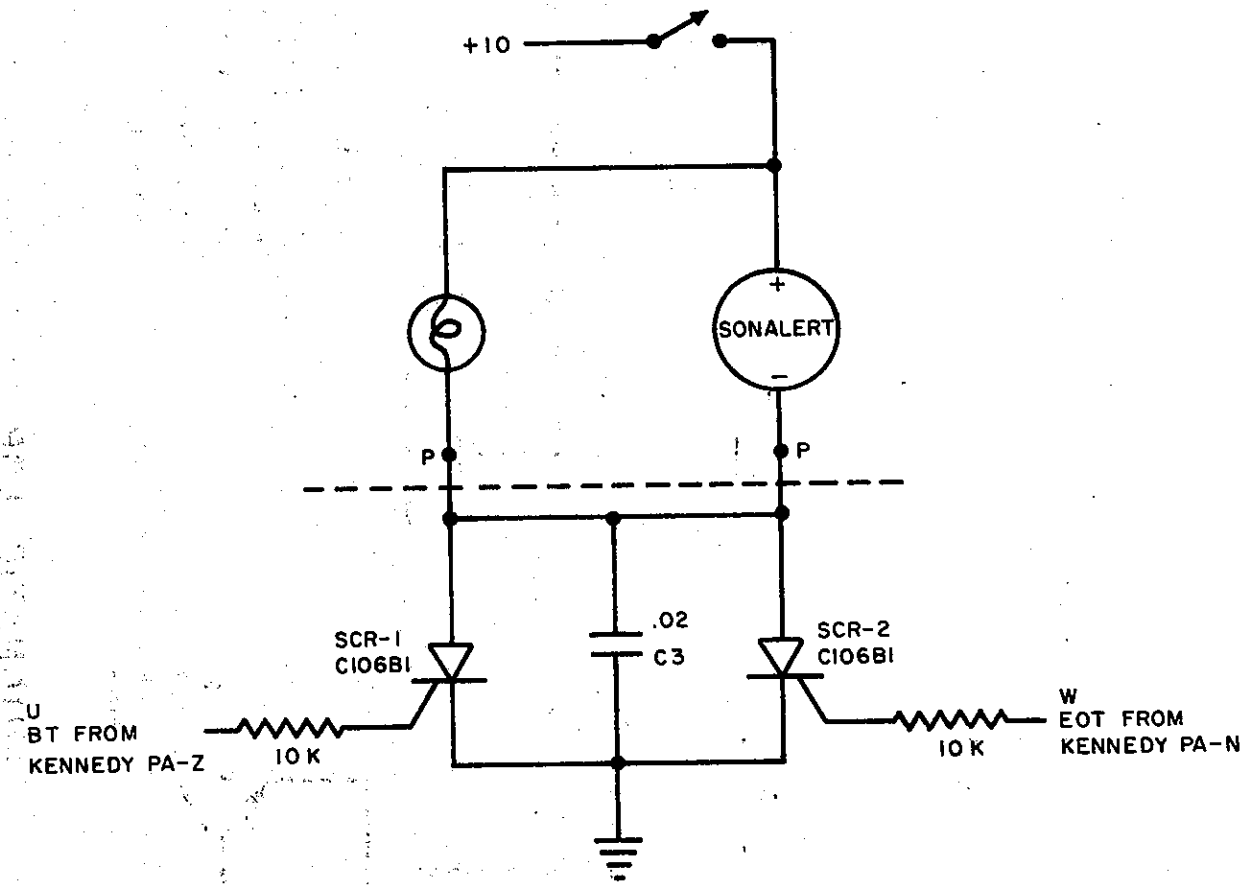

EOT / BROKEN TAPE SENSOR
(ON EOR BOARD)

ClibPDF - www.fastio.com

Figure 8

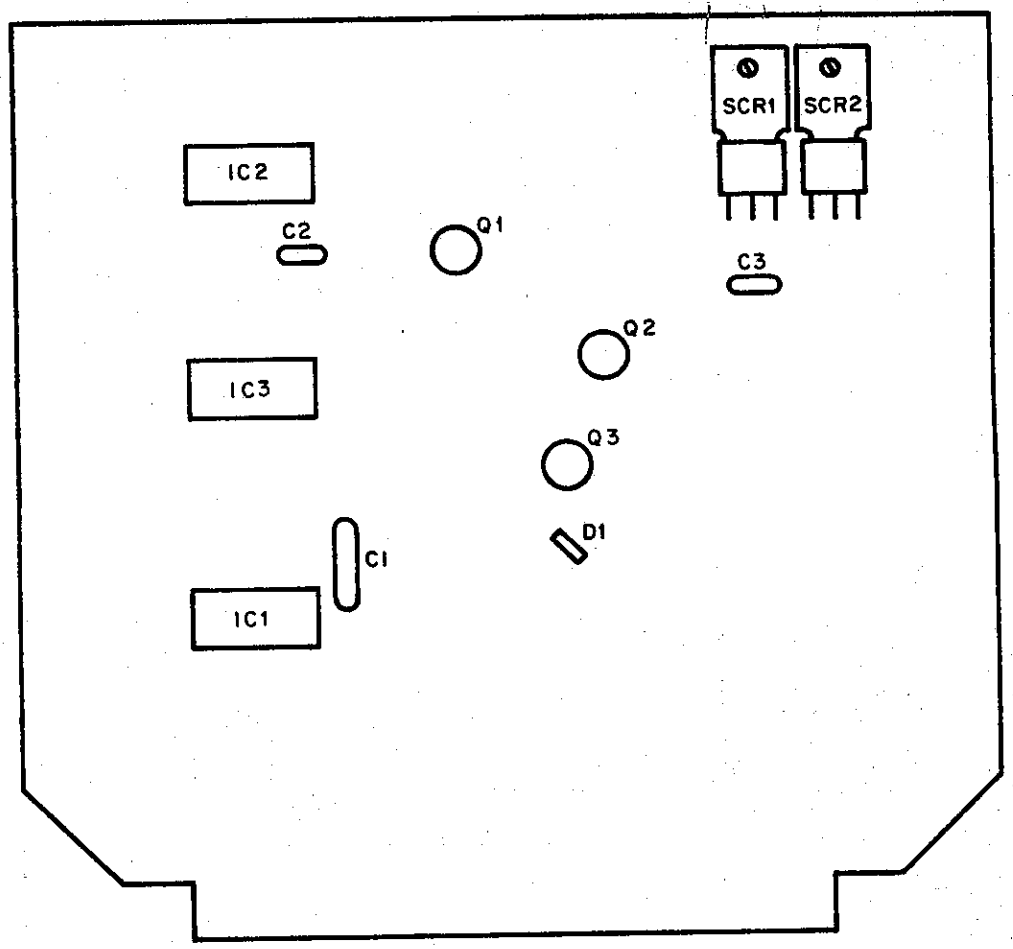

EOR BOARD

ClibPDF - www.fastio.com

Figure 9

CHARACTER SELECT

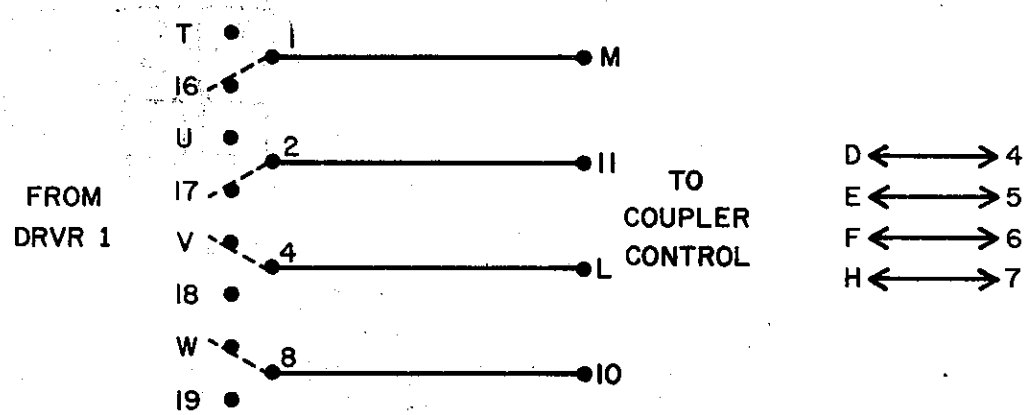

ELECTRICAL LAYOUT

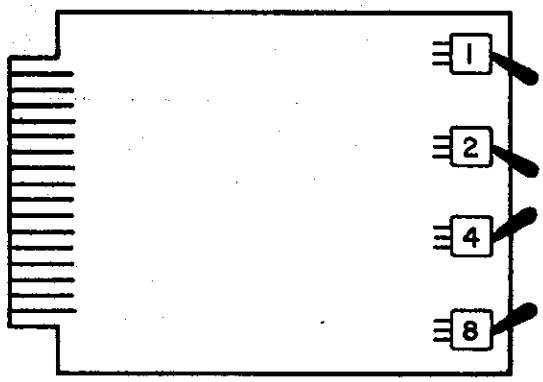

MECHANICAL LAYOUT

ClibPDF - www.fastio.com

Figure 10

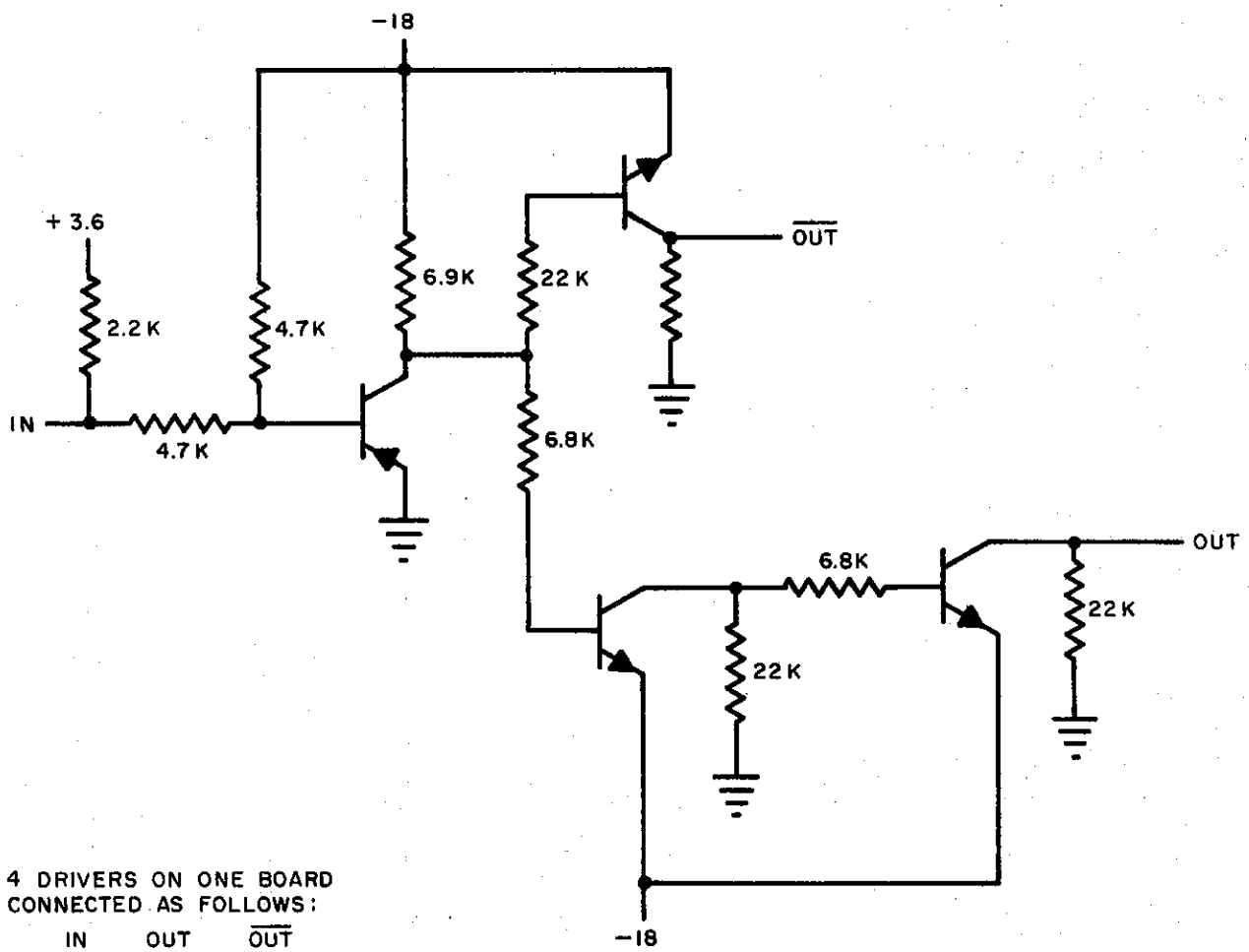

4 DRIVERS ON ONE BOARD
CONNECTED AS FOLLOWS:

IN	OUT	$\overline{\text{OUT}}$
A	C	B
E	H	F
P	S	R
X	Z	Y

+ 3.6 J, - 18 M, GND W.

ALL RESISTORS $\frac{1}{4}$ W 10%
PNP TRANSISTORS 2N4314
NPN TRANSISTORS 2N2270

DRIVER I
(CONTROL TO BCD CONVERTER)

ClibPDF - www.fastio.com

Figure 11

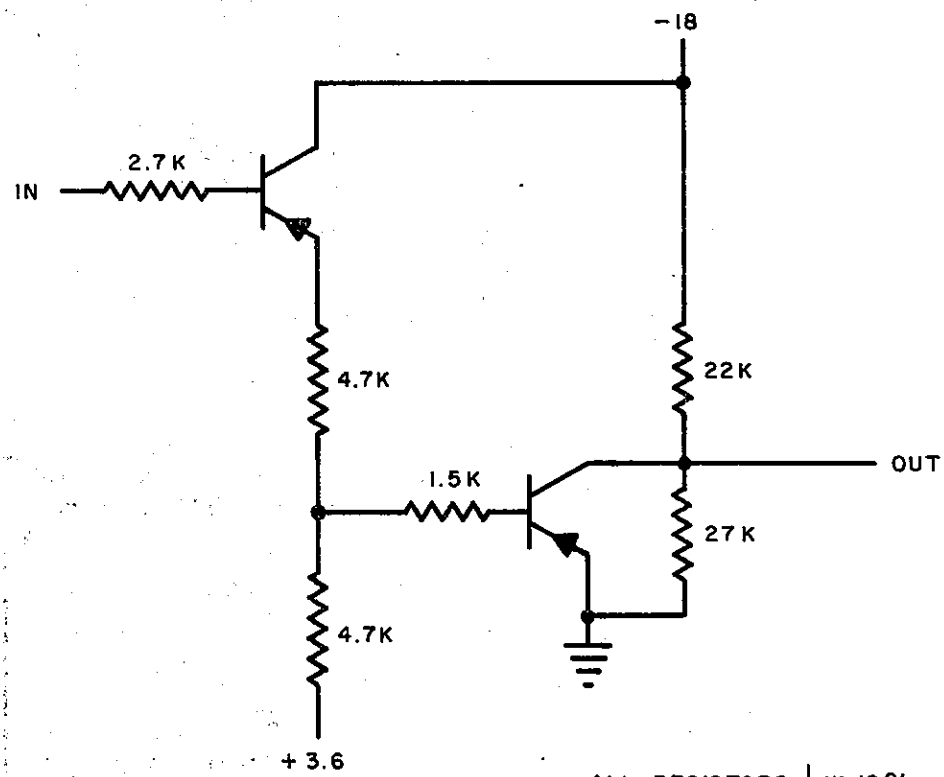

ALL RESISTORS $\frac{1}{4}$ W 10%
ALL TRANSISTORS 2N4314

4 DRIVERS ON ONE BOARD
CONNECTED AS FOLLOWS:

IN	OUT
A	B
F	H
R	S
X	Y

+3.6 N, 18 M, GND D.

DRIVER 2
(DATA GATES TO OUTPUT)

ClibPDF - www.fastio.com

Figure 12

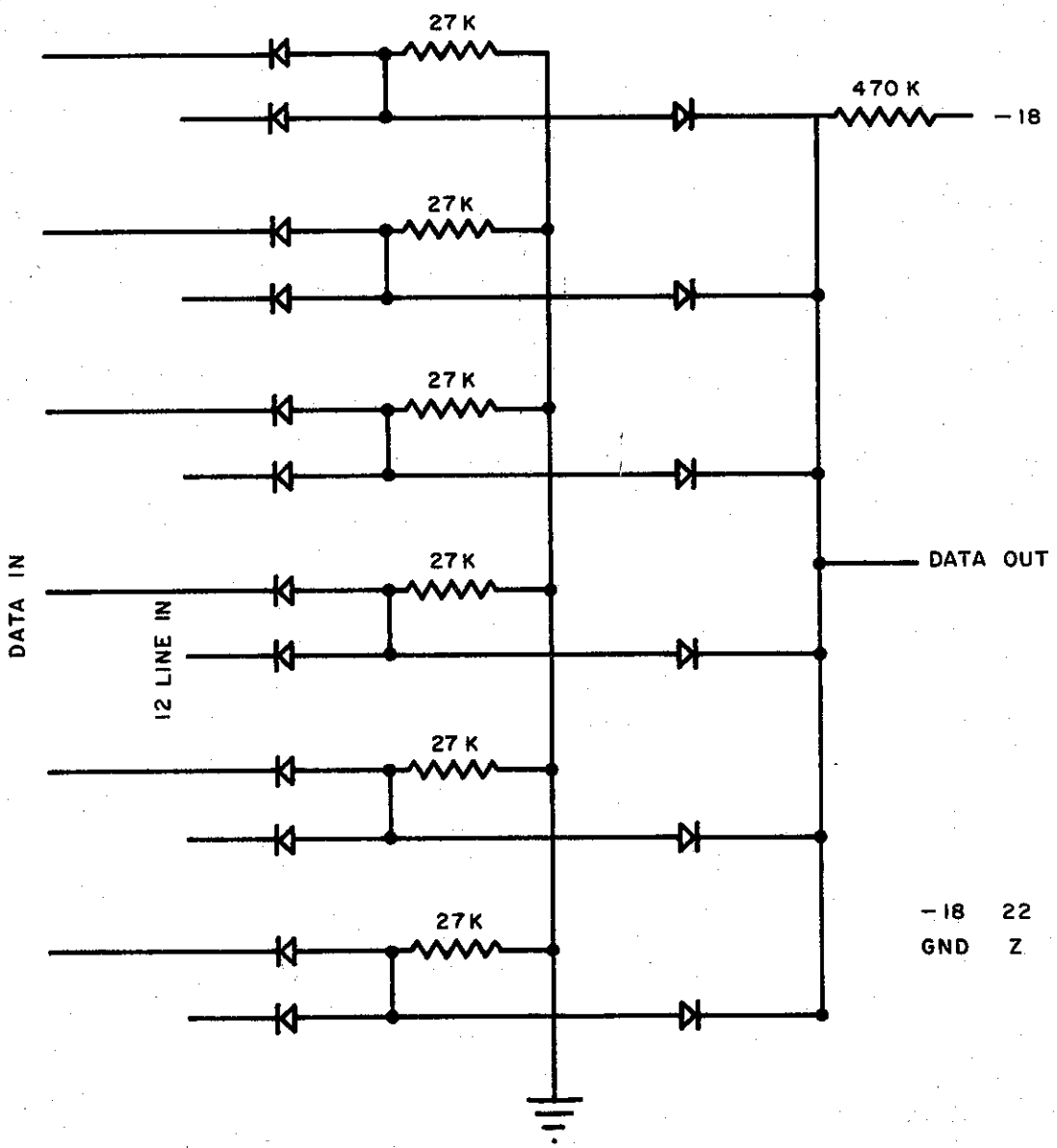

4 GATES ON ONE BOARD CONNECTED AS FOLLOWS

12 LINE	INPUT SET 1	INPUT SET 2	INPUT SET 4	INPUT SET 8
J	A	4	11	S
K	B	5	12	T
L	C	6	13	U
M	D	7	14	V
N	E	8	15	W
P	F	9	16	X
OUTPUTS	1	2	18	19

DATA GATES

(2 BOARDS REQUIRED)

ClibPDF - www.fastio.com

Figure 13

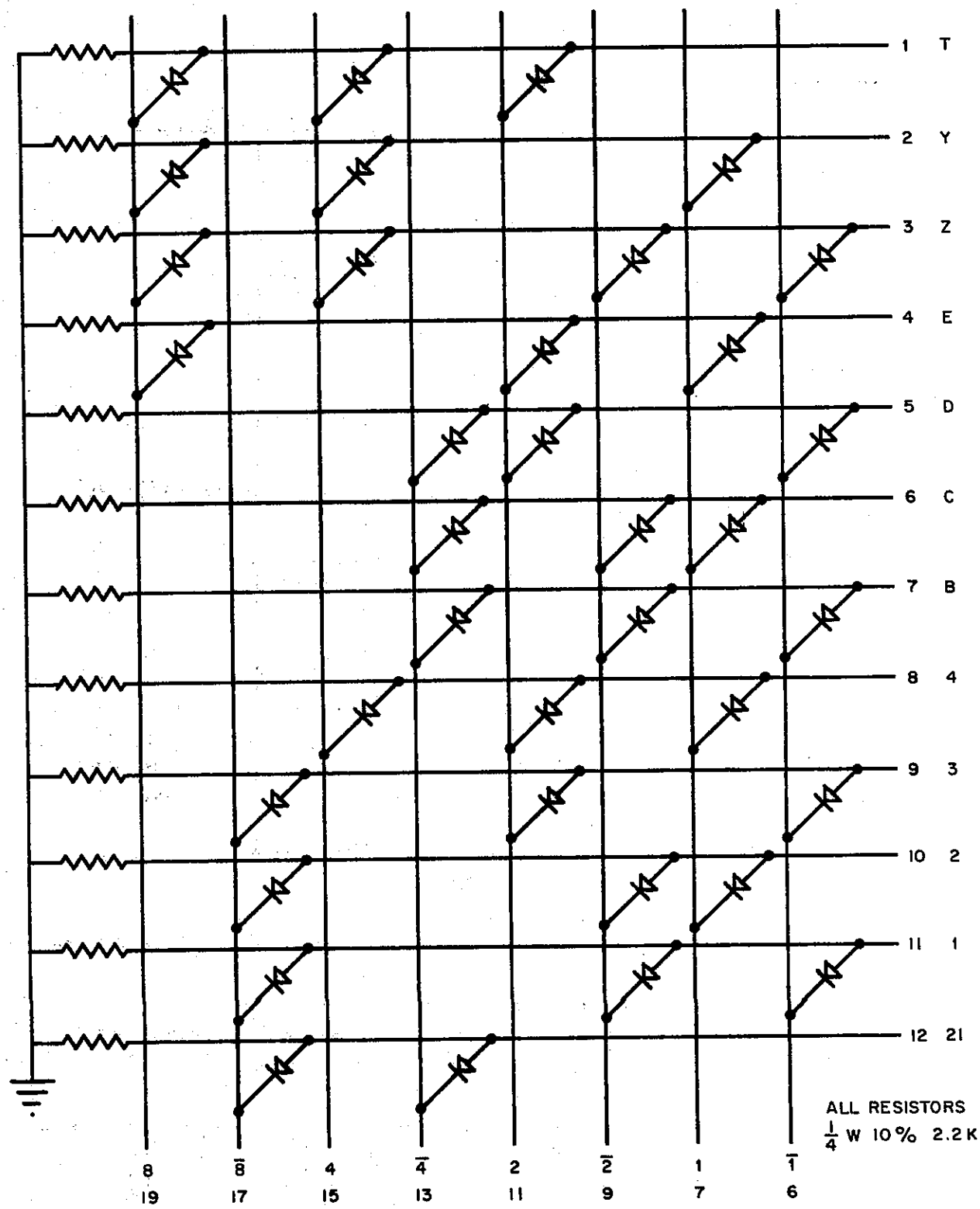

BCD - 12 LINE CONVERTER

ClibPDF - www.fastio.com

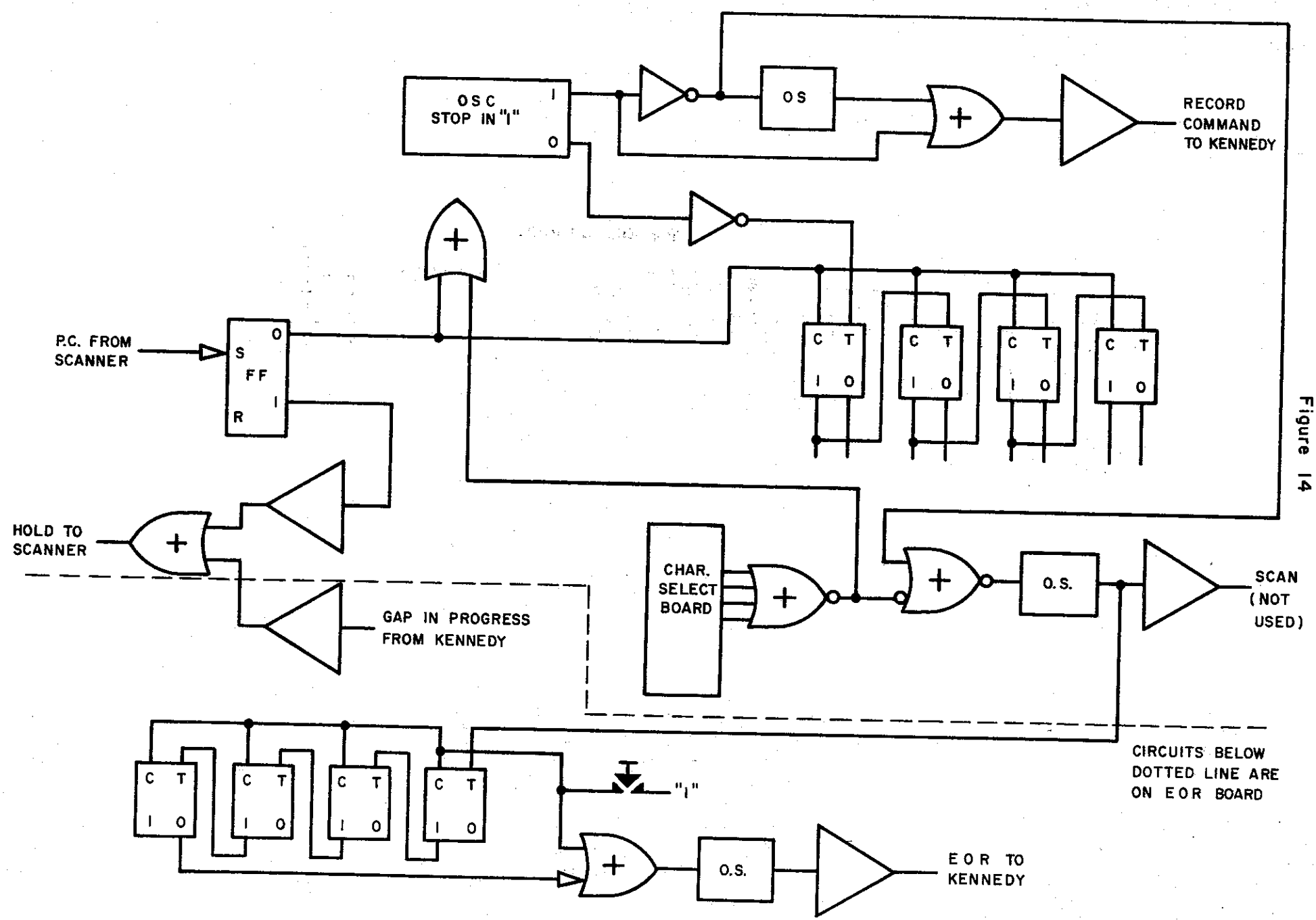

Figure 14

COUPLER CONTROL

ClibPDF - www.fastio.com

Figure 15

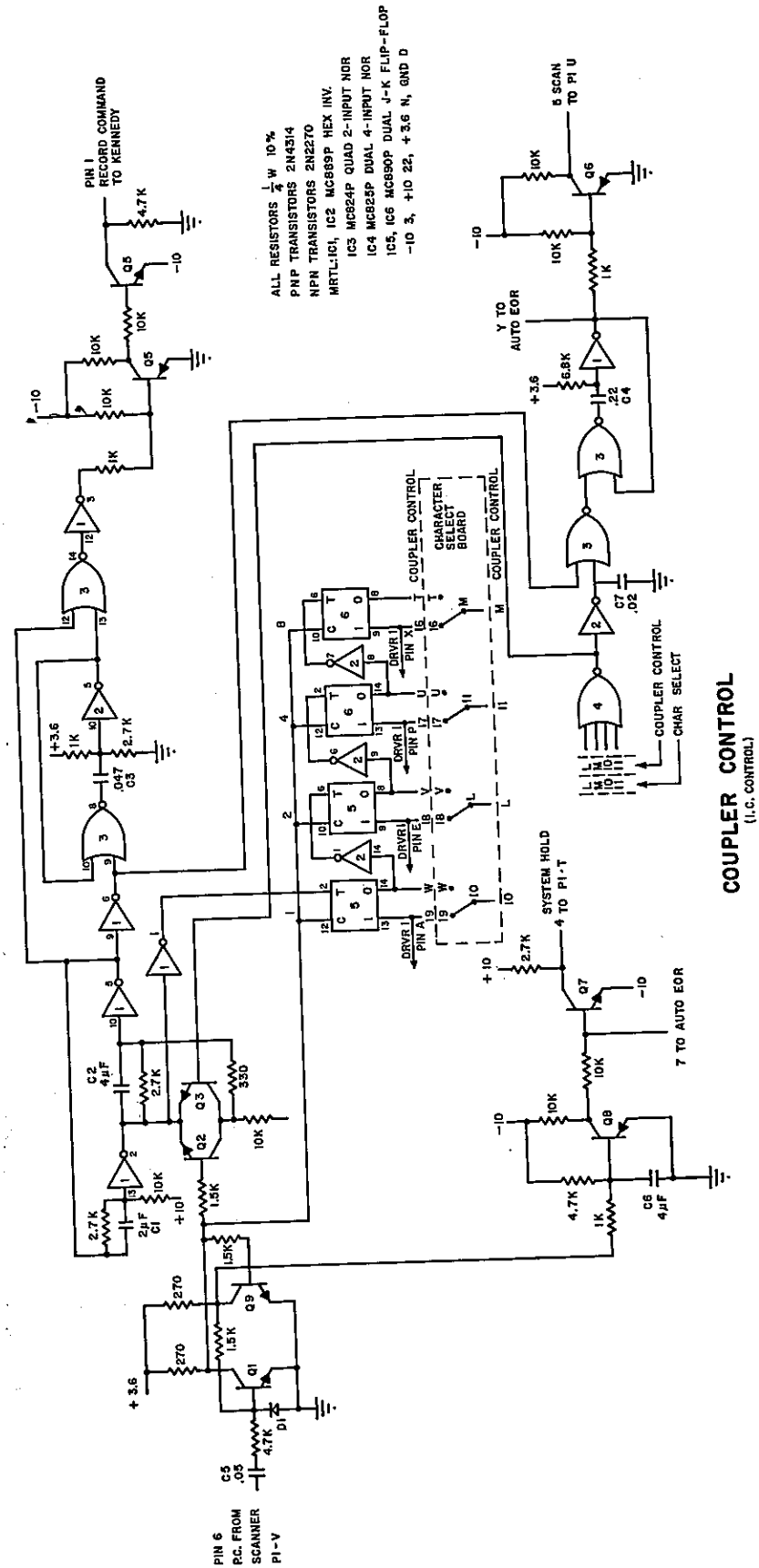

ClibPDF - www.fastio.com

Figure 16

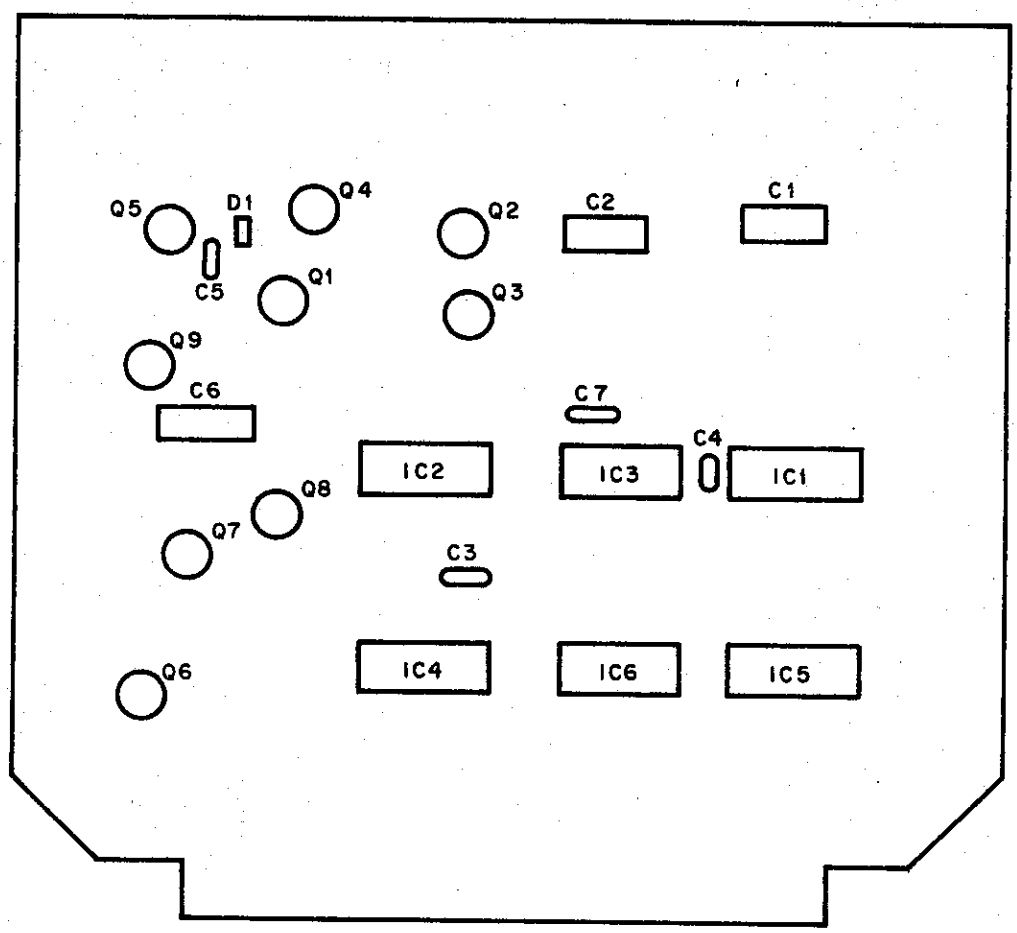

COUPLER CONTROL BOARD

ClibPDF - www.fastio.com

Figure 17

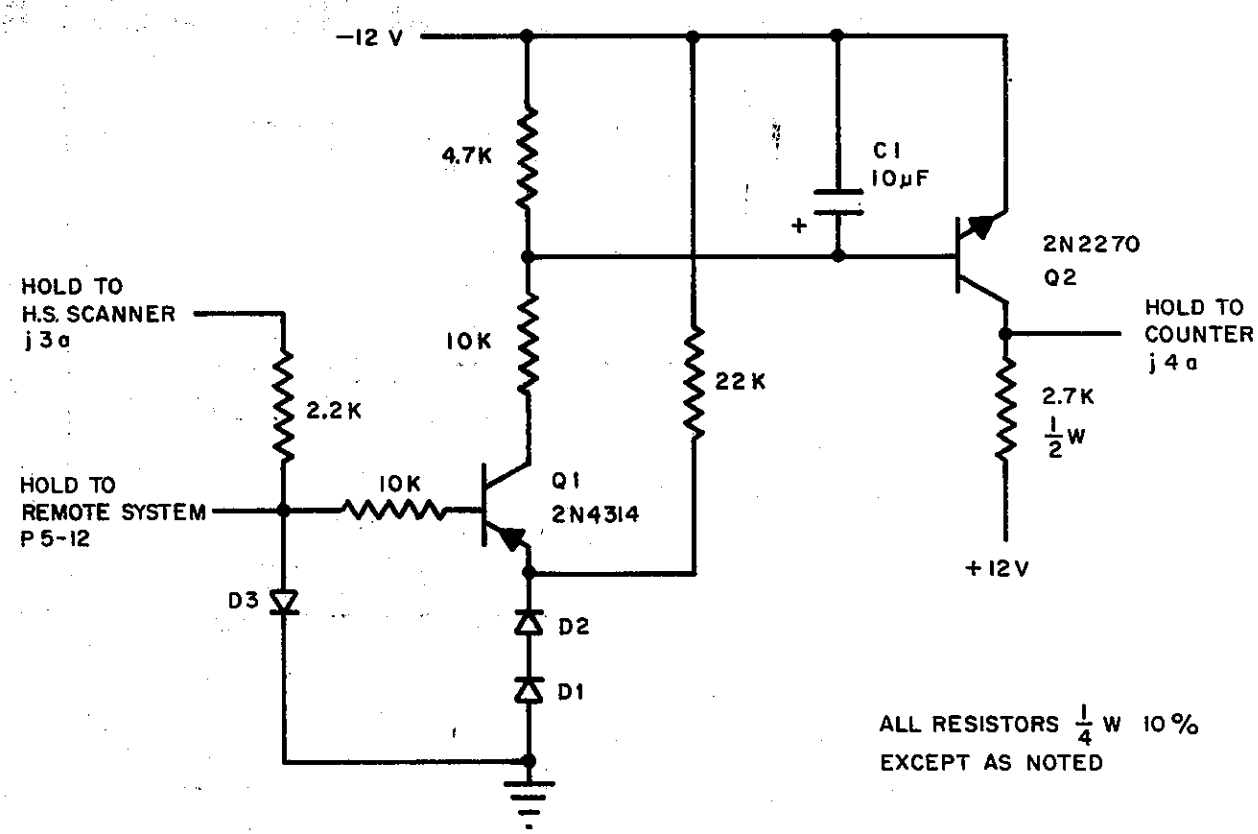

HOLD AMPLIFIER & SHORT PULSE FILTER

ClibPDF - www.fastio.com

Figure 18

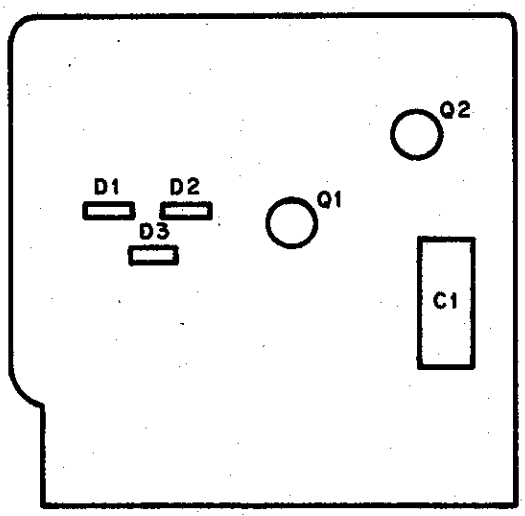

HOLD AMPLIFIER BOARD

ClibPDF - www.fastio.com

Figure 19

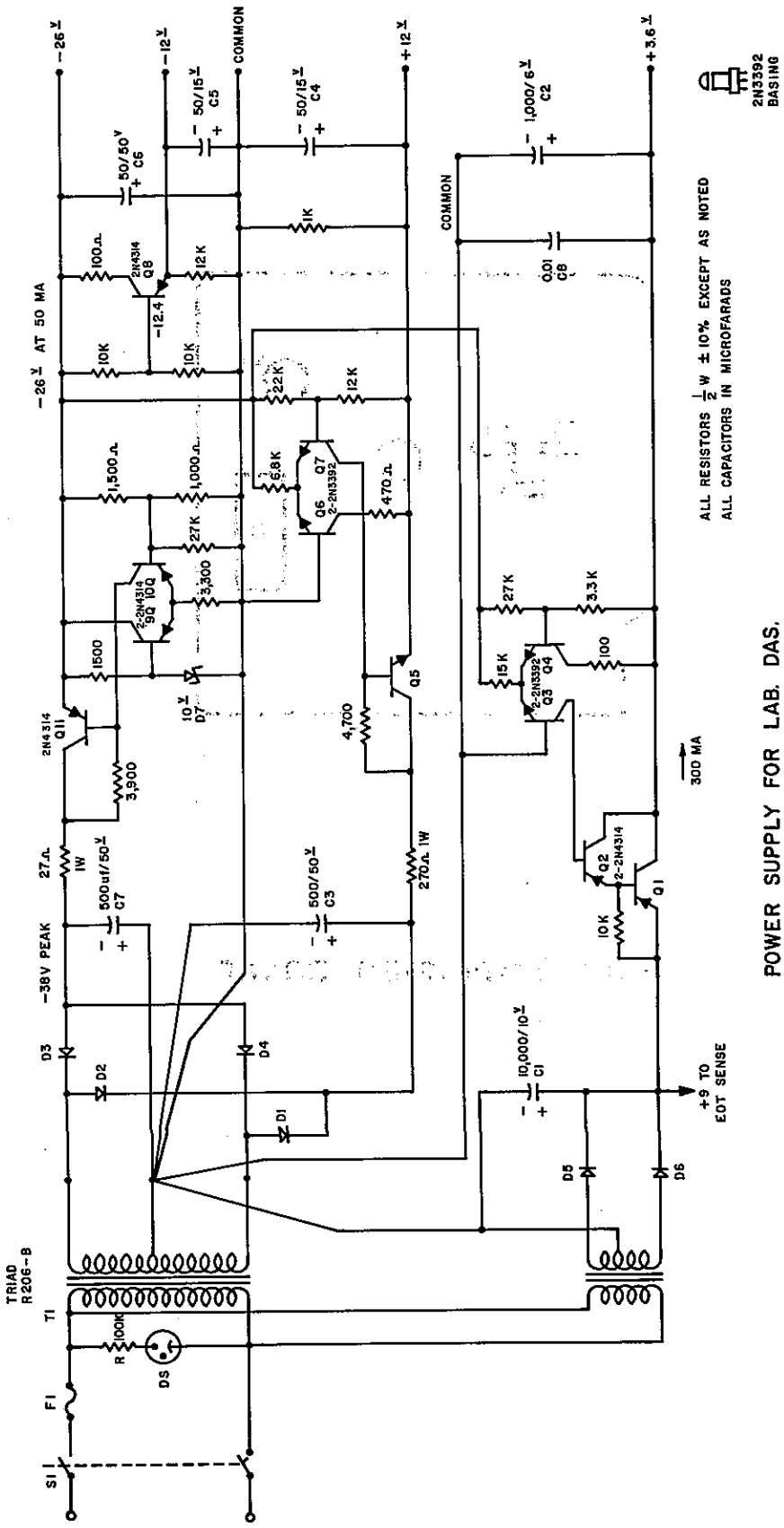

POWER SUPPLY FOR LAB. DAS.

ClibPDF - www.fastio.com

Figure 20

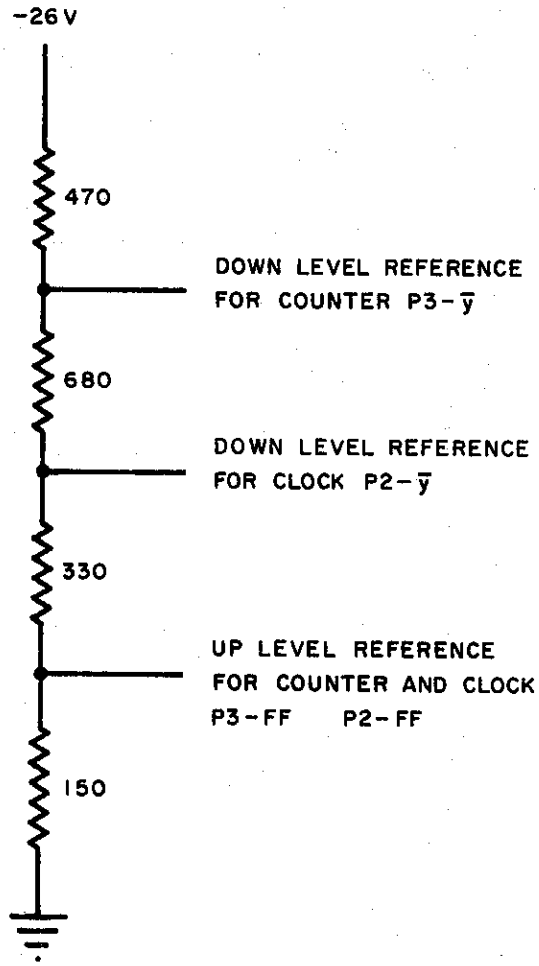

NOTE: CONNECT UNUSED CLOCK DATA LINES
(P2-$\overline{j}$, T, AA, EE, $\overline{x}$, BB, C, H, M, S) TO -12V
CONNECT UNUSED COUNTER DATA LINES
(P3-$\overline{s}$, $\overline{w}$, AA, EE, A, E, K, P, $\overline{x}$, BB, FF, C, H, M, S) TO -26 V

REFERENCE VOLTAGES
(ON POWER SUPPLY BOARD)

ClibPDF - www.fastio.com

Figure 21

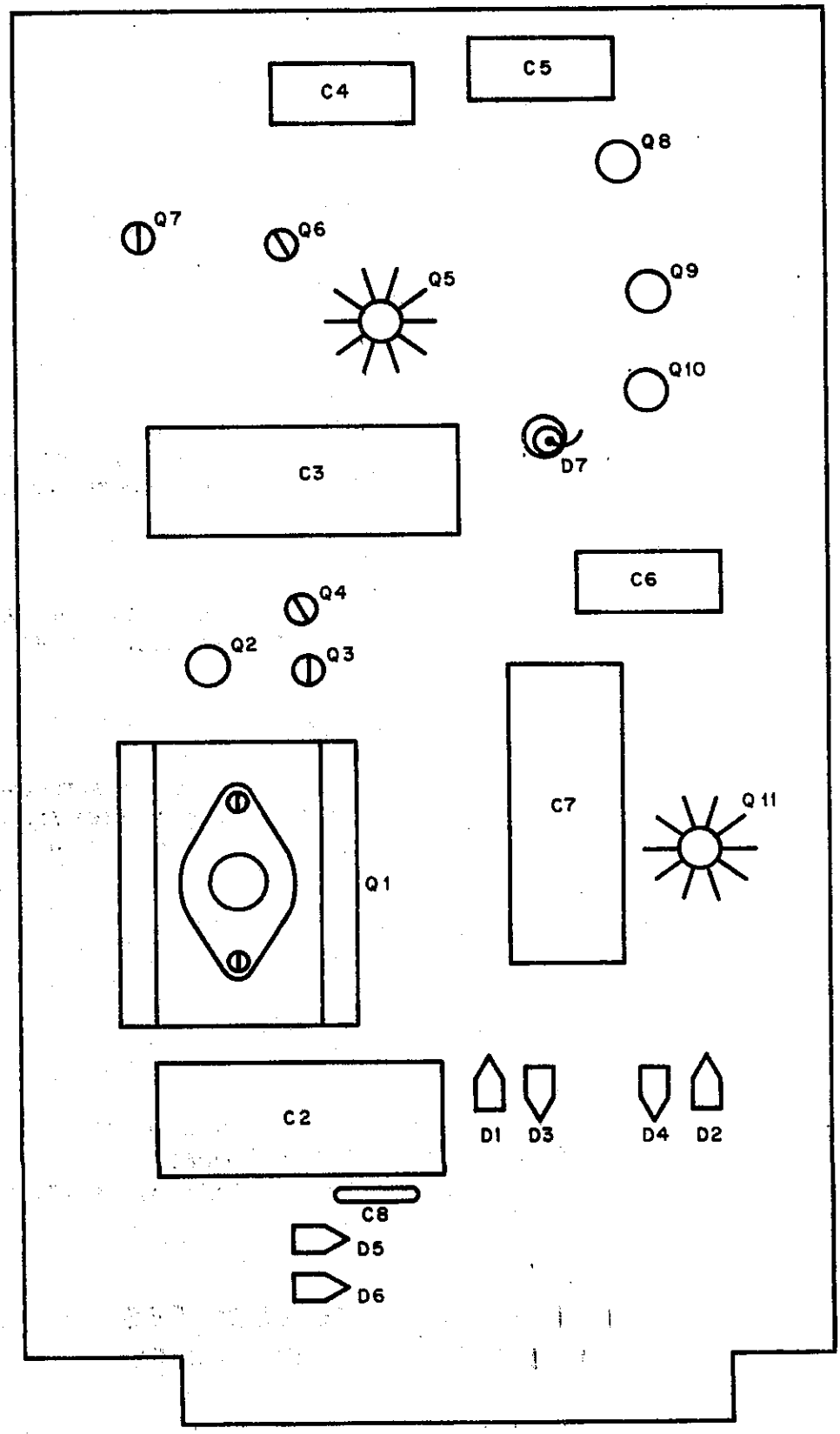

POWER SUPPLY BOARD

ClibPDF - www.fastio.com

Figure 22

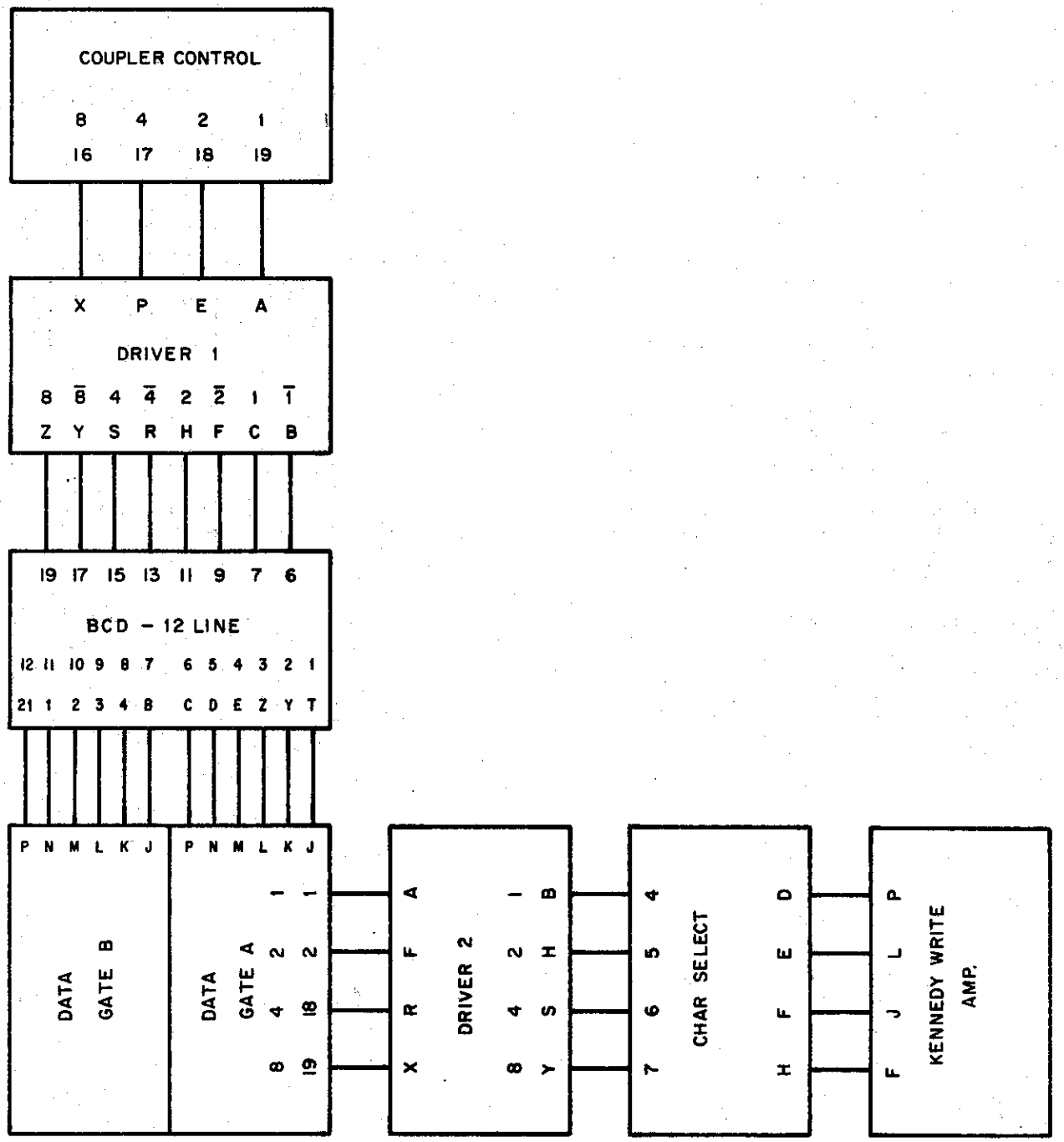

TAPE COUPLER

ClibPDF - www.fastio.com

ClibPDF - www.fastio.com

State of California
Department of Public Works
Division of Highways

MATERIALS AND RESEARCH DEPARTMENT

Test Method No. Calif. 219-C
April 3, 1972
(10 pages)

METHOD OF TEST FOR CONSOLIDATION OF SOILS

Scope

The consolidation test is designed to measure the compressibility of soils. In this test a laterally confined soil specimen is subjected to a series of constant axial loads. The results of the test are used to compute the quantity of settlement and the rate at which the settlement will occur in foundation soils under imposed loads. While application of consolidation test results for computing settlement is somewhat complex, the actual mechanics of the test are ordinarily routine. The test is, in reality, a model test and as such should simulate conditions as they will exist in the field.

A. Apparatus

1. Consolidometer; see Figures I, II, III and IV. In this device, loads of ⅛ ton/sq. ft. to 8 tons/sq. ft. are normally applied by use of a counter-balanced lever system and calibrated weights. Loads up to 64 tons/sq. ft. can be applied on request. A load of 1/16 ton/sq. ft. is applied by the weight of the piston only. The compression of the specimen is measured by a dial indicator which contacts the loading yoke. The loading yoke transmits the load to the piston containing the upper porous stone.

2. A dial indicator capable of measuring to 0.0001 in. and/or an electronic readout device (linear potentiometer).

3. Fine wire saw.

B. Calibration of Apparatus

Adjust the indicator dial with the adjusting plate to show an initial reading of about 0.0500 in. when the soil specimen is in place under no load. Make this setting by inserting a brass dummy specimen which is one inch high. Adjust the linear potentiometer with the adjusting plate so that nearly all of its travel length is taken up (at least 0.05 inches should remain to allow for possible swell of the specimen).

C. Test Record Forms

1. Record test data and results of calculations on test data sheet Form No. T-247 (Figure VII). Record sample identification and a description of the sample in terms of moisture, color, strength, grain size, and plasticity or any other appropriate terms on the test data sheet.

2. Record the void ratio, percent saturation, and when applicable, permeability calculations on Form T-2060 (Figure VIII); or

3. If calculations are to be done with the use of the computer, submit data from Form No. T-247 (Figure VII) to the Computer Section to be input into a computer program called "VRATO*", "VRATO*" outputs the initial void ratio, the void ratio and associated applied load or rebound load, the dry unit weight, and the percent saturation before and after test. "VRATO*" is included in Appendix I.

4. Plot time-consolidation curves on Form T-248 (Figure X), if they are not automatically plotted

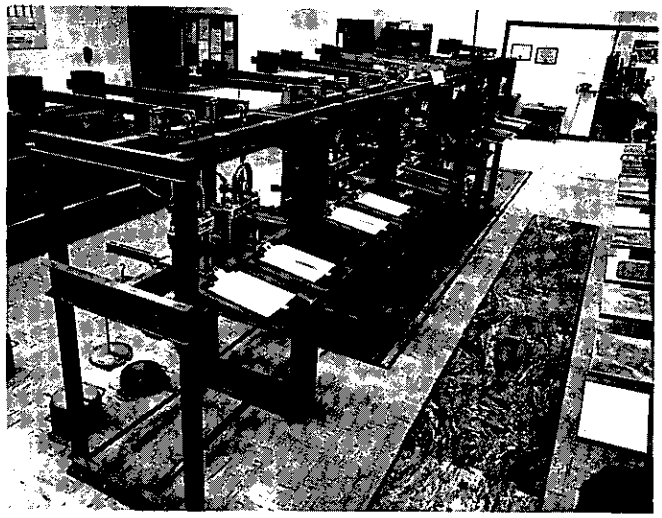

FIGURE I
CONSOLIDATION TEST APPARATUS WITH COUNTER-BALANCE LEVER SYSTEM. THE LEVER RATIO IS 8:1.

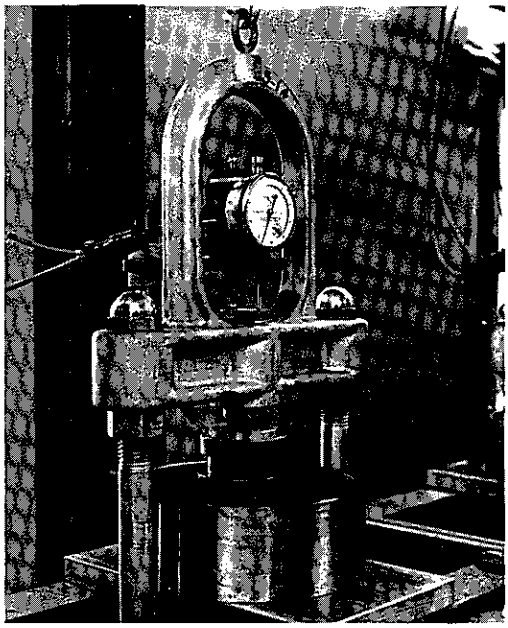

FIGURE II
CLOSE-UP VIEW OF CONSOLIDOMETER

ClibPDF - www.fastio.com

ClibPDF - www.fastio.com

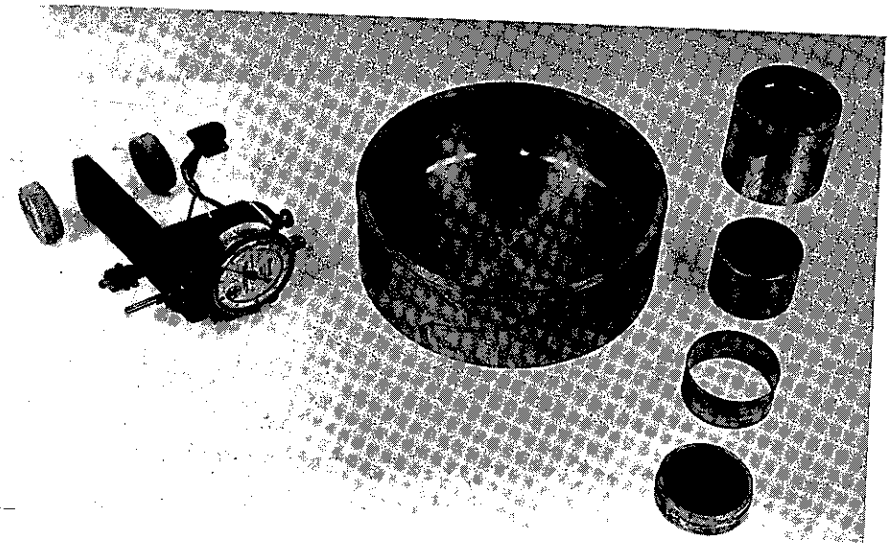

FIGURE III

COMPONENT PARTS OF ONE-DIMENSIONAL CONSOLIDOMETER

(see Section E, Paragraph 4 and Section G, Paragraph 3).

5. Plot void ratio versus pressure (P-e curve) on two cycle semi-logarithmic graph paper (See Figure IX).

D. Preparation of Sample

1. The soil samples are received in the laboratory in the 2-in. diameter by 4-in. brass tubes as obtained by the California Sampler, or in larger containers from which specimens must be trimmed.

2. The 2 in. x 4 in. tubes are relatively thin-walled and flexible; therefore, handle with care so that the soil is not deformed inside the tube.

3. Line the hollow steel cylinder, shown in Figures V and VI, with four 1-in. high segments of sampler tubing. Extrude the soil from the sample tube into the 1-in. high consolidometer rings by pushing the piston into the sample tube. This extrusion should move the sample in the same direction with reference to the tube as it moved during the sampling operation, in order to minimize disturbance of the soil structure.

4. Select one of the four specimens and trim carefully to the exact height of the ring by means of a fine wire saw as shown in Figure VI. Exercise care in these operations so as to disturb the sample as little as possible and to maintain a tight fit of the specimen in the brass ring. Do all the work swiftly to prevent excessive drying of the soil.

5. If the first specimen is damaged in some manner, trim one of the remaining specimens for the test. After a satisfactory specimen is obtained, retain the remainder of the soil for a moisture determination, specific gravity, and other soil classification tests as required. After trimming is complete, weigh the specimen and ring and record on the data sheet; also, record the tare weight of the ring. The specimen is now ready for testing.

E. Testing Procedure

1. Put the specimen base in the center of an empty saturation reservoir; place the soil specimen and retainer ring on the base; center the specimen loading piston on the specimen; and then place the loading piston guide over the piston, specimen, and base. See Figure IV. Special care should be given to specimen set-up so as to disturb the specimen as little as possible. Place the consolidometer on the consolidation frame, lower the loading yoke gently onto the specimen loading piston, and record the initial dial reading. Place an initial seating load on the specimen and fill the saturation reservoir to a level sufficiently high to insure saturation of the specimen. For average specimens use an initial seating load of $\frac{1}{8}$ ton/sq. ft., for very soft specimens use 1/16 ton/sq. ft. (the piston only), and for very firm specimens use $\frac{1}{4}$ ton/sq.ft.

2. Double the load on the specimen at the end of each 24-hour period until the highest desired load is obtained (usually 8 tons/sq. ft.). Then allow the specimen to swell under successively decreasing loads during a final 24-hour period. The final load will usually equal 1/16 ton/sq. ft.

3. Record dial readings at the time intervals indicated on data sheet, Form No. T-247 (Figure VII). Take the first reading six seconds after the application of the load increment. Take subsequent readings at gradually increasing time intervals as shown on Figure VII.

4. The linear potentiometer is read by an electronic tape recorder system. If readings are to be made using

ClibPDF - www.fastio.com

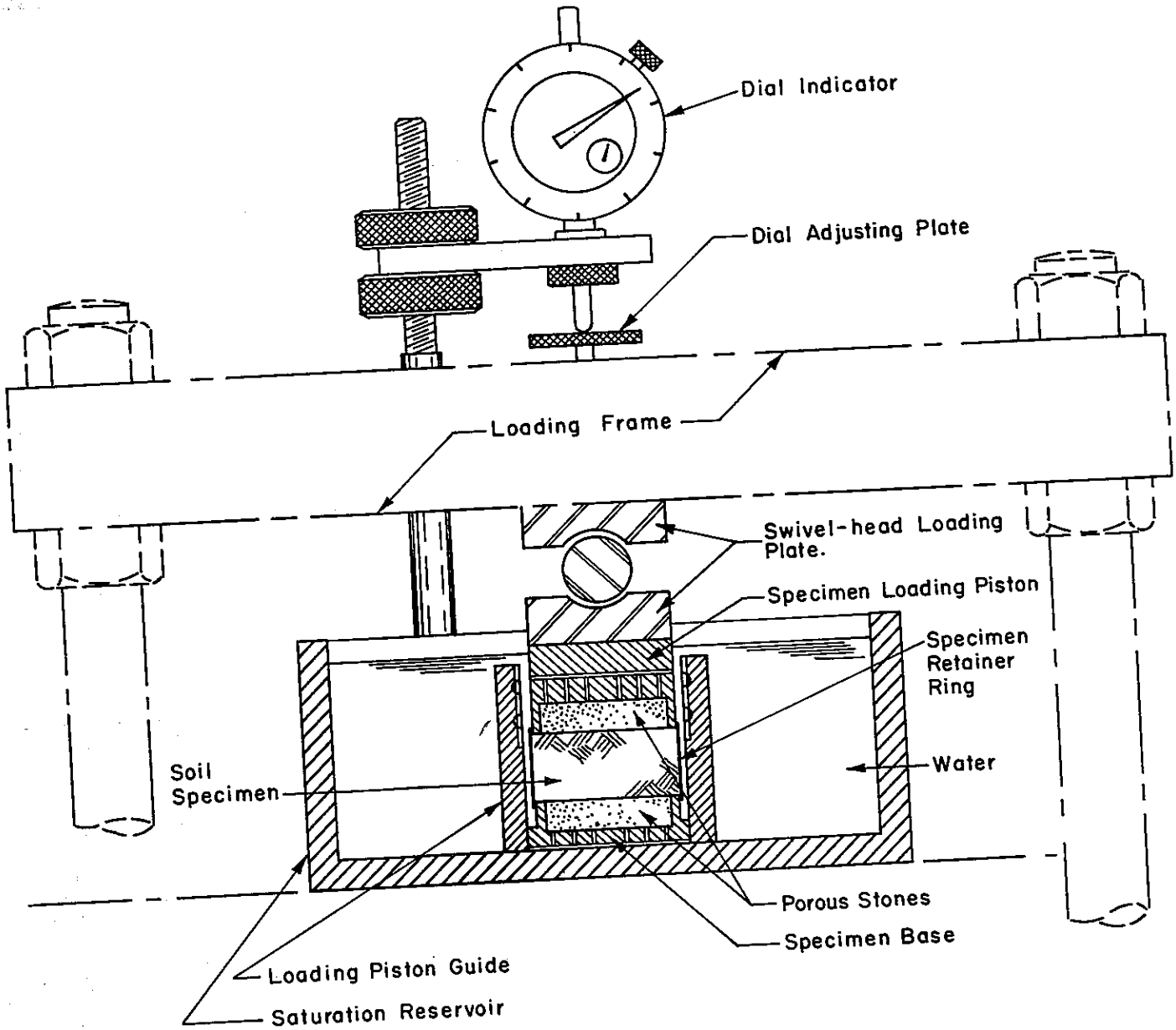

SCHEMATIC DIAGRAM OF ONE-DIMENSIONAL CONSOLIDOMETER

ClibPDF - www.fastio.com

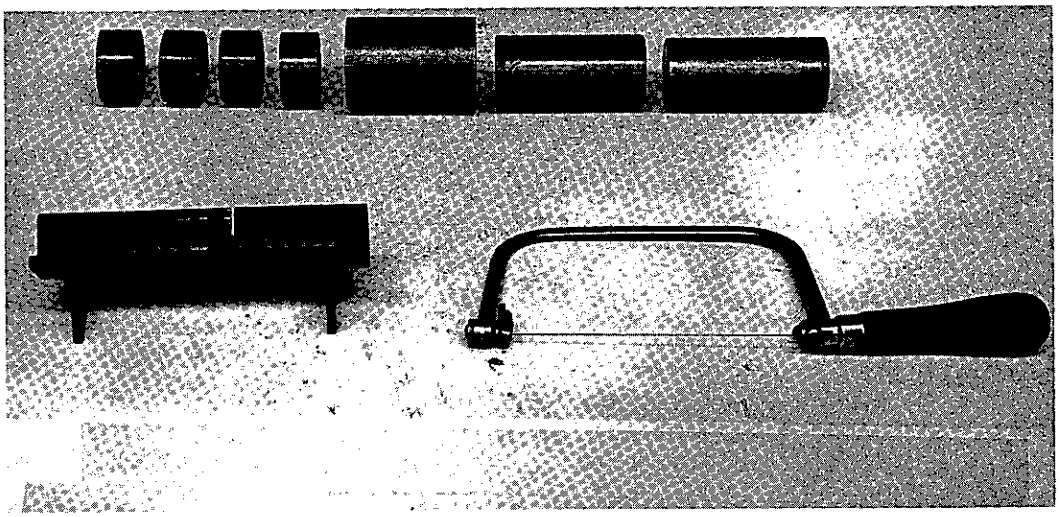

FIGURE V
EXTRUSION EQUIPMENT

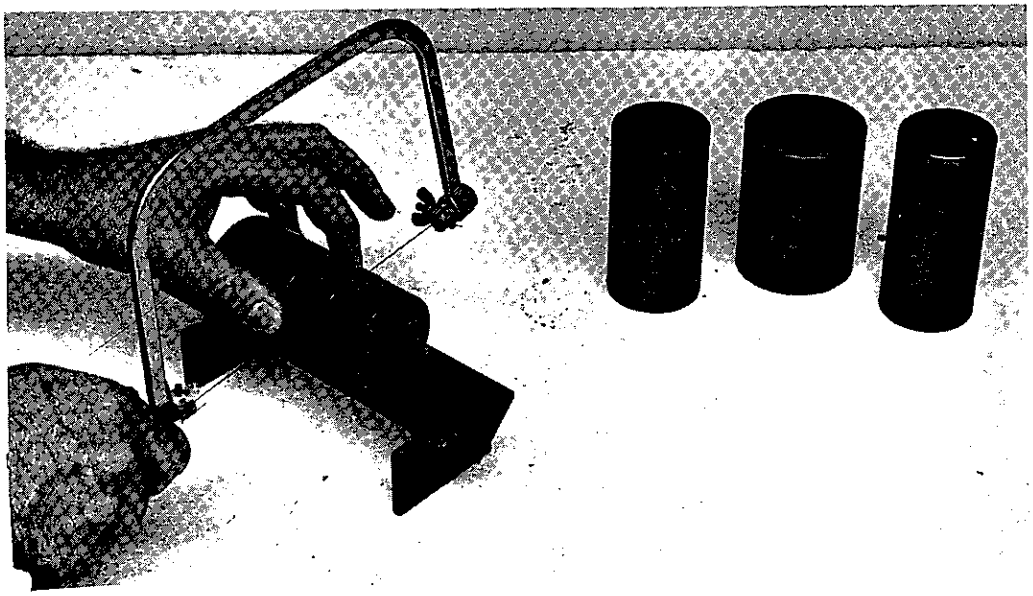

FIGURE VI
TRIMMING EQUIPMENT

ClibPDF - www.fastio.com

STATE OF CALIFORNIA DIVISION OF HIGHWAYS
MATERIALS & RESEARCH DEPARTMENT

CONSOLIDATION TEST DATA

DESCRIPTION _____ JOB NO. _____
LOCATION _____
SAMPLE NO _____
ELEV. _____ DEPTH. _____

GROSS DRY CALC. SHEET _____ MACHINE _____ DATE STARTED _____ TEST BY _____ CALC _____ CHKD _____

MOISTURE CONTENT DATA	WEIGHTS GROSS WET	WEIGHTS GROSS DRY	WEIGHTS TARE	WEIGHTS NET WET	WEIGHTS NET DRY	MOISTURE GMS	MOISTURE %	UNIT WT. WET	UNIT WT. DRY	% SATURATION
BEFORE TEST										BEFORE
AFTER TEST										AFTER

LOAD T/FT.²	0	1/16	1/8	1/4	1/2	1	2	4	8	REBOUND 2	REBOUND 1/4	REBOUND 1/16
TOTAL CONSOL %												
VOIDS RATIO												

LOAD T/FT.²		1/16		1/8		1/4		1/2		1		2		4		8		REBOUND 2	
TIME	SEC. MIN. HRS.	DATE	DIAL READ	DATE	DIAL READ	DATE	DIAL READ	DATE	DIAL READ	DATE	DIAL READ	DATE	DIAL READ	DATE	DIAL READ	DATE	DIAL READ	DATE	DIAL READ
INITIAL																			
SECONDS	0																		
	6S																		
	12																		
	18																		
	30																		
	42																		
MINUTES	1M																	INCHES	%
	1½																		
	2																		
	3																	1/4	
	4																		
	6																		
	8																		
	10																		
	15																		
	25																		
	35																		
	45																	INCHES	%
	60																		
	90																		
HOURS	2H																	1/16	
	3																		
	4																		
	5																		
	6																		
	7																		
	8																		
	24																		
	48																		
	72																		
	96																		
TOTAL CONSOL.		INCHES	%	INCHES	%	INCHES	%	INCHES	%	INCHES	%	INCHES	%	INCHES	%	INCHES	%	INCHES	%

HMR T-247 (Rev. 3-62)

FIGURE VII

ClibPDF - www.fastio.com

the tape recorder system, manually enter into the system the consolidometer number, the loading code, the job number, the boring number, the sample number, and the tube number. By manipulation of the recorder system, vertical movements are then recorded on the tape for the applied load at 1-second intervals up to 90 seconds, at 1-minute intervals as required, and at 1-hour intervals up to 24 hours or until the next load is to be applied. Vertical movement on rebound (unloading) can also be recorded. The recorder system has the capability of reading 24 consolidation tests consecutively.

5. After the test is complete, disassemble the consolidometer and remove the specimen. Blot all free water off the specimen and the ring before weighing for a final water content determination.

F. Data Required for Computations

The data required are:

1. The initial wet weight of the specimen.
2. The initial and final water content of the specimen.
3. The dry weight of the specimen.
4. The cumulative reduction in height for each time interval for each load increment in inches.
5. The total cumulative reduction in height after each successive load increment in inches, and in percent of original height.
6. Specific Gravity.

G. Calculations and Plotting

1. Record the cumulative reduction in height after each successive load increment in inches and percent of original height on Form T-247 (Figure VII).

2. Record the calculations of void ratio for each load on Form T-2060 (Figure VIII), and transfer the results to form T-247 (Figure VII). Also record the calculations for percent saturation before test and after test and the calculations, when applicable, for permeability "K" in feet per hour on Form T-2060 (Figure VIII).

3. The time-consolidation curves (Section C, Paragraph 4) are plotted automatically by computer from linear potentiometer measurement. If calculations are done utilizing the computer program "VRATO*" enter the results on Form T-247 (Figure VII).

4. Plot the void ratio versus pressure curve on two-cycle semilogarithmic graph paper. This curve is the basis for calculating the amount of ultimate settlement in a given foundation layer. A pressure-void ratio curve, representative of a firm silty clay, is shown on Figure IX.

5. Plot dial readings versus the logarithm of time for the load increments of $\frac{1}{4}$ to $\frac{1}{2}$, $\frac{1}{2}$ to 1 and 1 to 2 tons per square foot on Form No. T-248 (Figure X). Plots of dial reading versus time for the higher load increments may sometimes be necessary, dependent upon the proposed field loads. The readings for theoretical zero and 100 percent primary consolidation are determined in accordance with methods by A. Casagrande.[1] The time for 50 percent consolidation, "t_{50}," is located on the time curve half-way between the theoretical zero point and the 100 percent primary consolidation point.

An example of dial movement versus time curves representative of a firm silty clay is shown on Figure X.

6. Other data necessary in the computation of settlement are: (1) an accurate soil profile including drainage conditions, (2) the loading history of the soil to date and (3) the load that will be added during construction.

End of Text on Calif. 219-C

[1] Taylor, D. W., Fundamentals of Soil Mechanics, John Wiley and Sons, New York, 1948.

ClibPDF - www.fastio.com

MATERIALS & RESEARCH DEPARTMENT

JOB NO. 2432 - 20 - Q

BORING NO. (61 - 38) - 5 - I

VOID RATIO CALCULATIONS

CALC. BY R.E.S. DATE 11. 2. 61

CHECKED BY R.A.H. DATE 11 - 3 - 61

γ_s = 62.4 x 2.76 = 172.5 #/ft.^{3}

γ_d = 1.284 x 69.6 = 89.4 #/ft.^{3}

$e_o = \frac{\gamma_s - \gamma_d}{d}$ = $\frac{83.1}{89.4}$ = 0.930

$e_{1/8}$ =	0.93	-(0.001	x 1.93	) =	0.93	- 0.002	=	0.928
1/4 =		-(0.0045	x	) =		- 0.009	=	0.921
1/2 =		-(0.0124	x	) =		- 0.024	=	0.906
1 =		-(0.0251	x	) =		- 0.048	=	0.882
2 =		-(0.0451	x	) =		- 0.087	=	0.843
4 =		-(0.0779	x	) =		- 0.150	=	0.780
8 =		-(0.1326	x	) =		- 0.256	=	0.674
2 =		-(0.1223	x	) =		- 0.236	=	0.694
1/4 =		-(0.0978	x	) =		- 0.189	=	0.741
1/8 =		-(—	x	) =		- —	=	—
1/16 =		-(0.0791	x	) =		- 0.153	=	0.777 *

% SATURATION

BEFORE TEST	$S_{\%} = \frac{\text{Sp.Gr.} \times \%M}{e_o} = \frac{2.76 \times 34.1}{0.930} = 101\ \%$
AFTER TEST	$S_{\%} = \frac{\text{Sp.Gr.} \times \%M}{*\ e_{1/16}} = \frac{2.76 \times 29.1}{0.777} = 103\ \%$

PERMEABILITY "K"

$$K(\text{ft/hr}) = 2.561 \times 10^{-3} \times \frac{\Delta e \cdot H^2}{\Delta p\ (1 + e_m)t}$$

WHEN:

- Δe = Change in void ratio
- H = Length of drainage path
- Δp = Change in pressure (T.S.F.)
- e_m = Average void ratio.
- t = Time in minutes for 50% consolidation

FORM T-2060 (Rev. 3-62)

Sample Void Ratio and % Saturation Calculations Sheet

Fig. VIII

ClibPDF - www.fastio.com

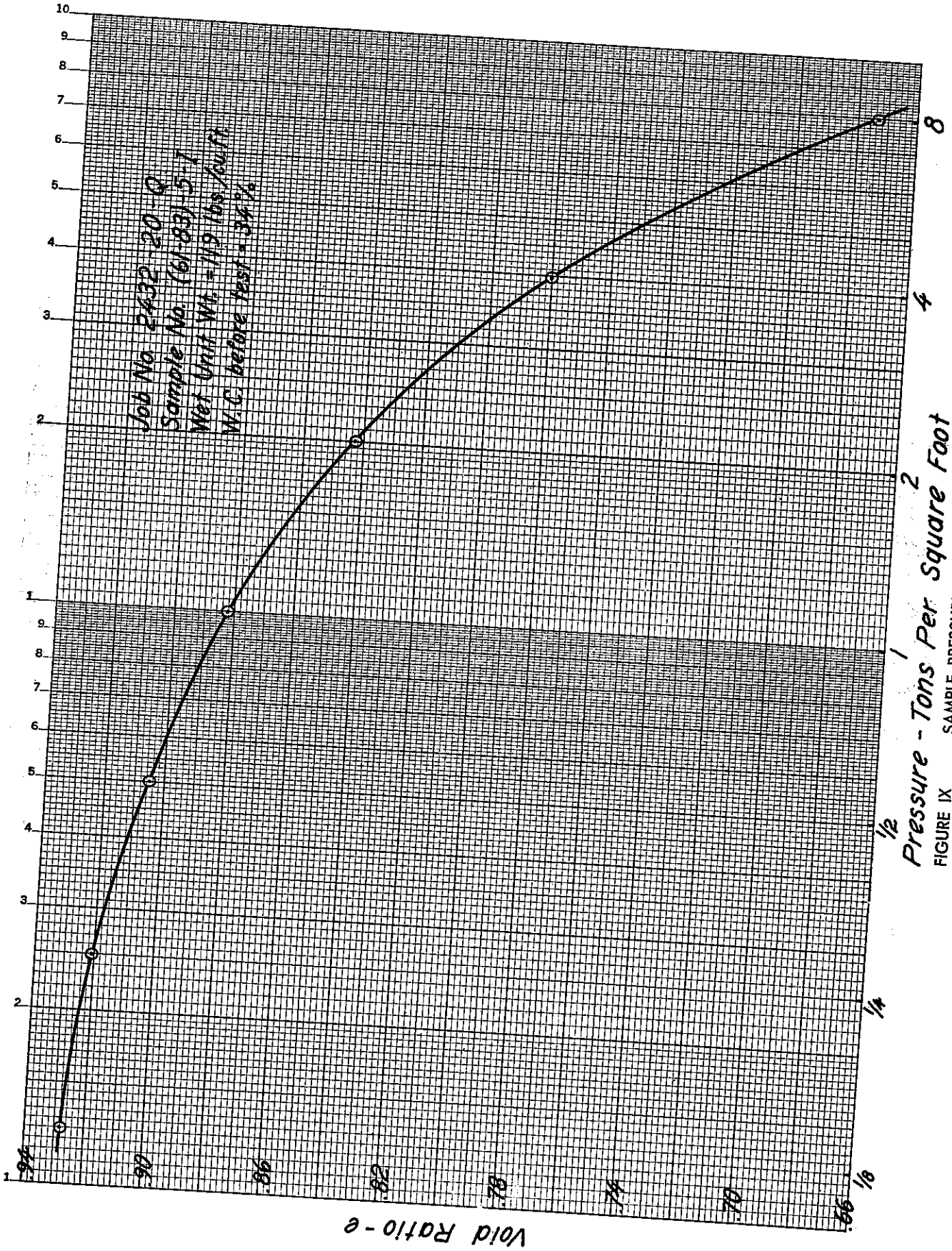

FIGURE IX
SAMPLE PRESSURE-VOID RATIO CURVE

ClibPDF - www.fastio.com

STATE OF CALIFORNIA
DEPARTMENT OF TRANSPORTATION
DIVISION OF HIGHWAYS
TRANSPORTATION LABORATORY

TIME-CONSOLIDATION CURVES

FORM T-248 (REV. 10-58)

LOCATION So. of Greenlaw		JOB NO. 2432-20-Q	
ELEVATION	DEPTH	SAMPLE NO. (61-83)-5-I	
DIST. I	CO. Hum.	RTE. 1	SEC. E
SAND 3	SILT 61	CLAY 36	COLLOIDS 20
WET UNIT WEIGHT BEFORE TEST 119 LBS./CU. FT.			
WATER CONTENT BEFORE TEST 34.1 % OF DRY WT.			

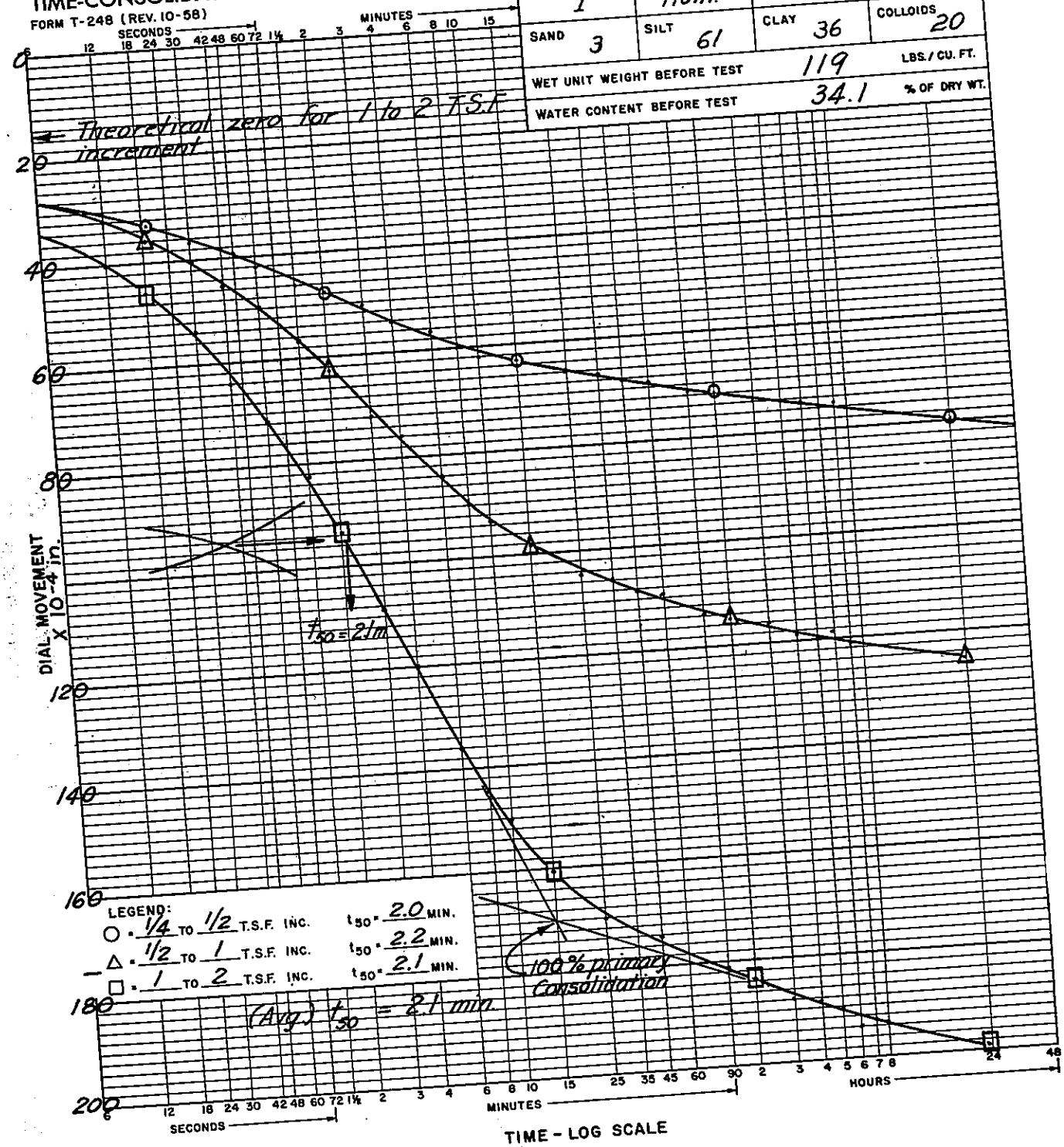

TIME - LOG SCALE

FIGURE X

SAMPLE DIAL MOVEMENT-TIME CURVES

ClibPDF - www.fastio.com

```
100 PRINT'DATA FILENAME':
110 INPUT F1$
120 OPEN F1$,1,INPUT,OLD
130 ON ENDFILE (1) GOTO 560
140 A$1="        LOAD (TSF)        VOID RATIO"
150 DATA .125,.25,.5,1,2,4,8,2,.25,.0625,0,0,0,0,0
160 DATA 1,2,4,8,4,2,4,8,16,32,64,16,4,1,0
170 DATA 1,2,4,8,16,8,4,8,16,32,64,16,4,1,0
180 DATA 1,2,4,8,16,4,8,16,32,64,16,4,1,0,0
190 DIM A(4,15)
200 MAT READ A
210 INPUT FROM 1:A$,B$,Z,H,D,G,W,M1,M2
220 R=(PI*D^2)/4
230 V=R*H
240 W1=G*62.4
250 W2=(W/453.59)/(V/1728)
260 E1=(W1-W2)/W2
270 S1=G*M1/E1
280 PRINT IN FORM'%/////':CHAR(12)
290 PRINT TAB(18):"JOB NUMBER : ":A$
300 PRINT TAB(18):"SAMPLE IDENT : ":B$
310 PRINT
320 PRINT
330 PRINT
340 PRINT
350 PRINT TAB(15):"VOID RATIO AND SATURATION DATA"
360 PRINT
370 PRINT
380 PRINT
390 PRINT A$1
400 PRINT
410 FOR I=1 TO 15
420 IF A(Z,I)=0 THEN 480
430 INPUT FROM 1:H1
440 H1=H1*10^-4
450 E=E1-(H1*(1+E1)/H)
460 PRINT IN FORM '2(11%.4%)/':A(Z,I),E
470 NEXT I
480 PRINT
490 S2=G*M2/E
500 PRINT
510 PRINT "INITIAL VOID RATIO = ":TAB(31):INT(E1*1E3)*1E-3
520 PRINT "DRY UNIT WEIGHT = ":TAB(31):INT(10*W2)/10
530 PRINT "PCT. SATURATION BEFORE TEST =":TAB(31):INT(S1*10)/10
540 PRINT "PCT. SATURATION AFTER TEST = ":TAB(31):INT(10*S2)/10
550 GOTO 210
560 PRINT CHAR(12)
570 END
```


ClibPDF - www.fastio.com

ClibPDF - www.fastio.com