72-43a

ClibPDF - www.fastio.com

ClibPDF - www.fastio.com

TECHNICAL REPORT STANDARD TITLE PAGE

1. REPORT NO.	2. GOVERNMENT ACCESSION NO.	3. RECIPIENT'S CATALOG NO.
4. TITLE AND SUBTITLE Traffic Noise Near Highways, Testing and Evaluation		5. REPORT DATE January 1973 6. PERFORMING ORGANIZATION CODE 19702-954107-656316
7. AUTHOR(S) John L. Beaton and Louis Bourget		8. PERFORMING ORGANIZATION REPORT CA-HY-MR-6316-2-72-43
9. PERFORMING ORGANIZATION NAME AND ADDRESS California Division of Highways Materials and Research Department 5900 Folsom Blvd.,Sacramento, Calif. 95819		10. WORK UNIT NO. 11. CONTRACT OR GRANT NO. A-9-2
12. SPONSORING AGENCY NAME AND ADDRESS U.S.Department of Transportation Federal Highway Administration Washington, D. C. 20590		13. TYPE OF REPORT & PERIOD COVERED Interim; 1965-1972 14. SPONSORING AGENCY CODE

15. SUPPLEMENTARY NOTES

16. ABSTRACT

A test method for measuring and evaluating noise at properties adjacent to highways is described. Also presented is a quick and simple method for determining the noise reduction offered by noise barriers of varying height, from a cross section and the use of a noise nomograph, as an aid in barrier design. Empirical verification is cited under precise field conditions.

17. KEY WORDS	18. DISTRIBUTION STATEMENT
Noise, test procedure, sound barrier, nomograph, traffic noise.	Unlimited

19. SECURITY CLASSIF. (OF THIS REPORT)	20. SECURITY CLASSIF. (OF THIS PAGE)	21. NO OF PAGES	22. PRICE
Unclassified	Unclassified	29	

HMRT – 1242 (ORIG. 9/72)

ClibPDF - www.fastio.com

ClibPDF - www.fastio.com

STATE OF CALIFORNIA—BUSINESS AND TRANSPORTATION AGENCY

RONALD REAGAN, Governor

DEPARTMENT OF PUBLIC WORKS
DIVISION OF HIGHWAYS
MATERIALS AND RESEARCH DEPARTMENT
5900 FOLSOM BLVD., SACRAMENTO 95819

January 1973

Interim Report
A-8-2

Mr. R. J. Datel
State Highway Engineer

Dear Sir:

Submitted herewith is a research report titled:

TRAFFIC NOISE NEAR HIGHWAYS

TESTING AND EVALUATION

Principal Investigator

Louis Bourget

Under the Supervision of

John L. Beaton

Very truly yours,

JOHN L. BEATON
Materials and Research Engineer

ClibPDF - www.fastio.com

ClibPDF - www.fastio.com

TABLE OF CONTENTS

	Page
ACKNOWLEDGEMENTS	ii
INTRODUCTION	1
DEVELOPMENT OF TEST PROCEDURE	2
IMPLEMENTATION	7
WHAT SHOULD THE NOISE GOALS BE?	7
WHAT ARE THE MOST EFFECTIVE CONTROLS AVAILABLE TO THE HIGHWAY DESIGNER?	9
CONCLUSIONS	11
REFERENCES	12
APPENDIX	23

ClibPDF - www.fastio.com

ClibPDF - www.fastio.com

ACKNOWLEDGMENTS

This work was accomplished in cooperation with the United States Department of Transportation, Federal Highway Administration.

The contents of this report reflect the views of the authors who are responsible for the facts and the accuracy of the data presented herein. The contents do not necessarily reflect the official views or policies of the State of California or the Federal Highway Administration. This report does not constitute a standard, specification or regulation.

ClibPDF - www.fastio.com

ClibPDF - www.fastio.com

INTRODUCTION

The public is aroused and is demanding better laws to protect mankind from pollution of the environment, least we all perish from progress. There is a growing awareness in the world that most of the environmental contamination can be prevented through better engineering practices and that these better engineering practices can be employed without undue loss of progress and without returning to a primitive way of life.

Some industrialists have long insisted that noise and pollution of the water and air was the price that must be paid for industrial progress and jobs. This traditional view is crumbling, as evidenced by the new image being presented in the advertisements and news releases.

Noise is a problem of growing concern and many rules and regulations for control are being formulated and adopted at local, state and national levels. A most important problem is the noise that emanates from vehicles traveling on highways.

The disturbing effects on people, during the daylight hours, are mainly from the highest peak levels reaching and penetrating the nearest dwellings. The disturbance increases with the occurrence rate. The highest transient peaks result from diesel powered trucks but there are also other important factors to be recognized. The peak levels reached by trucks are the same at any hour, day or night, and even though the nighttime occurrence rate may be only five percent or less of that in the daytime, the lower night rate does not automatically reduce the disturbance. The sleeping hours are a vastly more sensitive period and are characterized by a tremendous drop in level from all other noise sources that help to mask highway noise sources. The combined effects of the greater need for quiet and the lack of daytime masking noise sources, tends to magnify the disturbance to people. This more than offsets the disparity in occurrence rate.

The California Division of Highways has been engaged in studies on transportation noise for a number of years. These studies led to the development of a simple test method and procedure for preparing a quantitative noise report together with necessary information on possible mitigation measures. The noise report provides the following information:

ClibPDF - www.fastio.com

1. The present noise levels in the immediate area of the proposed project and their typical occurrence rate.

2. The projected noise levels in the immediate area after the project is built and their occurrence rate.

3. Identification of the adjacent areas that will require noise reduction in highway design considerations.

The purpose of this report is to present a discussion of the development and use of a test procedure by the California Division of Highways and the results of our continuing studies on design and field testing of attenuation devices.

DEVELOPMENT OF TEST PROCEDURE

The State of California has been and continues to be a leader in the adoption of laws for regulating transportation noise.

All of the laws are based on standards which use the A-weighted sound level and on methods which require the actual measurement of sound levels in the field with approved instruments. Therefore, in conformance with our legislative policy expressed in the laws we adopted the A-weighted sound level which, in our opinion, provides the most sensible measure of noise intensity in terms of human response.

It was many years ago that we first encountered discussions on noise at our public hearings on proposed projects. Over the years questions most often asked in these community discussions have been:

1. What is the present noise level in my neighborhood?

2. What will the noise level be when the project is constructed?

Therefore, the first objective in the development of our method to answer these questions, was to adopt an instrument that would provide a direct reading of the noise level in decibels, A-weighted (dBA). This provides interested people with a test reading that is understandable in terms of existing noise laws. We were also interested in an instrument that could be checked with calibration standards, be relatively inexpensive and simple enough to be operated by field personnel after a short training period.

ClibPDF - www.fastio.com

The second question was nore difficult to answer. At the time of the development of our method, and even today, models for predicting noise levels from transportation vehicles are still being developed and very little validation of such models is in evidence. We, therefore, began a measurement program of determining sound levels from many different highways in California. These measurements were made near all types of highways and both outside and inside of the nearest sensitive buildings. We observed that diesel powered transports produced the highest readings in comparison to other vehicle types. Measurements were made at various distances to determine the rate of decay. This provided information on noise levels from the loudest noise source to individuals who had full visual exposure to the roadway[1 and 2]. Noise charts were developed which employed truck noises as the basic "worst case" reference. In our opinion the peak noise range from diesel trucks provides the best key for answering the second question. We again wish to stress that the charts are based entirely on field measurements near existing highways and are periodically verified by checking "chart predicted" noise levels for future highways against the actual levels attained after the highways are completed and reach normal traffic conditions.

The chart marked Figure 1 (in reference 2) also permits plotting the noise contours, for worst case conditions, directly on a map of the proposed highway.

Highways and Freeways

The unshielded and fully exposed highway truck noise contours can be accurately predicted from the standard noise chart shown on the last page of Test Method No. Calif. 701-A. All such noise contour lines should be identified with the normal range of ± 6 dBA from the mean truck level; i.e., include the ± 6 after the base figure: 70± 6 dBA or 80 ± 6 dBA, etc. Do not use a mean figure without stating ± 6. There is no such thing as a single noise level for all trucks. The ± 6 dB represents the normal range of noise peaks for all legally muffled trucks in California at the present time.

Wherever existing highways carry no diesel trucks but do carry gasoline powered trucks you may subtract 6 dB from the chart figures in plotting the contour lines (± 6, as before stated) (Ref. 1, Fig. 2). Legally muffled motorcycles are generally in a noise class similar to the gasoline powered trucks.

Wherever existing highways carry virtually no trucks at all and no cross country buses, you may safely subtract 10 decibels from the chart figures to arrive at the automobile levels (± 6, as before stated).

ClibPDF - www.fastio.com

City Streets and Highways, 35 mph Maximum

Noise contour lines may be predicted at lower speeds within cities from the (701-A) chart by subtracting an additional 7 dBA from the chart value, i.e., the 80 ± 6 dBA for highway diesel trucks at 100 feet from the EP will become 73 ± 6 dBA at the lower city speed limits (25 to 35 mph). Statements by others to the effect that diesel trucks make the same noise output regardless of speed have not been borne out by our tests. The 7 dBA correction has been verified by tests made within cities by the Materials and Research Department.

The same 7 dBA correction also applies to the noise from gasoline powered trucks or family type automobiles. Note: automobiles may be nearer to a minus 10 dB (below city diesel trucks) when they are traveling at one-half of freeway speeds but the 7 dB figure allows for the frequent sports car or speeders. This is a conservative engineering practice.

The Effects of Solid Screening (Simple Approximation)

Wherever the residences will be completely shielded from a view of the trucks by intervening earth contours or commercial frontage buildings, you may subtract an additional 15 dB from the highway chart levels or the lower derived city levels (where 25 to 35 mph speeds prevail).

Where the residences will be only partly shielded from a view of the trucks, the noise reduction will vary from 3 to 7 dB from the chart values, Depending on the amount of visual shielding (up the side of a truck) from the observer's position. You obtain about 1 dB of noise reduction for each foot of optical screening up the side of a diesel truck for the first six feet of screening. Each additional foot of screening yields about 1.4 dB of noise reduction. A more sophisticated method employing a noise nomograph is presented later in this text.

The present method (701A) is presented in detail in Appendix 1. The key points in the test method are:

1. A careful calibration of the equipment in the field before every test.

2. A clear description of the location including the distance from the nearest highway edge of pavement (if built) and the distance(s) to other local noise sources of interest. The reference point being the nearest residences, schools or other inhabited properties adjacent to the highway.

ClibPDF - www.fastio.com

3.a. A "before construction" graphic level recording of the noise at the same distance and height as the nearest residential windows, for a future construction project.

b. A "before modification" graphic level recording of the noise near existing highways that will be widened or otherwise changed so as to bring the noise sources closer to the local inhabitants of adjacent properties.

4.a. A descriptive evaluation of the highest range of noise levels encountered (from the loudest vehicles) and a comparison with the future highest levels anticipated after the construction or changes are completed.

b. As previously noted the projected noise levels are derived from charts prepared from thousands of noise recordings made near existing highways in California. These charts are periodically checked for any required changes, by making new noise tests in the field. The changes have not been significant for the various classes of vehicles, in the past ten years, because most of the improvements in muffling have been largely offset by larger engines and the trend toward higher vehicle speeds on freeways.

5. The approximate number of peak noise events per hour are reported. The term employed is "occurrence rate" rather than frequency because the term frequency has another meaning in acoustics. Ambiguity is thereby avoided.

6. An evaluation is made of the noise impact. This is based on the highest decibel range anticipated from legally muffled diesel trucks, at the nearest properties and the occurrence rate of these noise peaks.

Diesel trucks are the preferred noise reference because they produce the highest noise peaks of all highway vehicles. Our long term experience with public complaints verifies that diesel trucks are the prime source of public disturbance and annoyance acording to public protests both verbal and by letter. There is no evidence from our past experience that justifies some other forms of evaluation that either "averages" the loud peaks with weaker background noises, or allows for a certain percentage of "free time" where noise may exceed any limit and be ignored (L10 for example). The public record does <u>not</u> indicate that the human ear performs an integration so that loud noises are mitigated by periods of quiet,

ClibPDF - www.fastio.com

no matter how long the quiet periods between loud noise peaks. It has also been observed that an increase in the number of noise peaks per hour are not interpreted by the public as a louder noise. The public (by voice and letter) correctly assesses a higher occurrence rate of peak noise as a more frequent disturbance, not as a louder disturbance. The two are not the same thing.

A similar response has been noted in the case of sonic boom versus normal jet aircraft noise. One sonic boom will cause more complaint than a host of lesser aircraft noises spaced randomly over a period of time.

About eighteen months ago we furnished all eleven of our Districts with noise measuring equipment, as described in the test method. We also trained our personnel in the use of the equipment and the preparation of quantitative noise reports. The method has proven to be simple and workable by actual field experience and in our judgement has furnished the necessary information for making decisions on the need for noise attenuation devices. As an example of the simple and direct approach of the test procedure, we note the following:

1. Recently the California Legislature passed a noise control bill for schools near highways. This bill states that highway traffic noise penetrations into the classroom shall not be permitted to rise above 50 dBA due to the construction of a highway in the vicinity of the school [3].

   The employment of the method (701-A) in all of our Districts has permitted a rapid evalu-tion of before and after conditions and, through the use of our charts, identifying the need for attenuation devices. In response to requests for noise surveys, the District Environmental Units produce comprehensive studies in a short period of time. Since all existing and projected values in our method are in dBA levels a direct comparison with the requirements of the law are immediately available for management decisions. Since all measurements are either directly determined in the field by approved and fully calibrated instruments or taken from charts based on actual field studies, the results have been fully accepted by school authorities and other interested parties. The noise prognosis is always checked by measurement after the highway is fully activated.

2. Recent legislation requires California counties to place noise contours on their land use plans. The simple method

ClibPDF - www.fastio.com

described herein permits contours to be drawn from the charts and with correction already noted, application may be made to city streets and other situations encountered by local engineering staffs.

3. A recent request was made for a noise attenuation survey of the State Highway System with an estimate of cost of barrier construction for various possible management or legislative decisions. This information was rapidly assembled by District Environmental units using the California method.

4. Numerous individual complaints may be handled with the test method. The procedure is easily explained and understood when measurements are made in the presence of the complaining party. The party may directly read the instrument and from a noise chart can quickly understand the magnitude of the noise.

IMPLEMENTATION

The information from the field noise report and evaluation is given to the highway design engineers. The highway designer has the task of determining the method of attenuation to achieve the desired limit for maximum peak noise exposure from leagally muffled trucks. The goal for the maximum permissible residential exposure has been rather loosely defined in the past, although a 70 dBA maximum is our goal.

WHAT SHOULD THE NOISE GOALS BE?

There continues to be a critical need for more information on people's reaction to transportation noise, as indicated by the different approaches to the problem of measurement and setting of standards[4,5,6].

From our studies the first objective or short term goal should be to limit the noise peaks that reach the nearest residences to 70 dBA or less from all legally muffled diesel trucks.

> Note: This requires that the windows be closed in the nearest residence to achieve a peak limitation at the interior of 45 dBA[1]. This is no panacea but it will be a tremendous improvement over the existing situation.

ClibPDF - www.fastio.com

Many experts in the field are not advocating a residential exterior limit of 60 dBA for peaks from legally muffled trucks. This is especially desirable where the bedrooms of residences face the noise source. It would also lessen the disturbances within family patio areas which are an intimate part of home living in California.

The long term goals expressed by some are to reduce noise penetrations to acceptable speech interference levels in family patios. This is on the order of 50 dBA for maximum peak levels where the people are six feet apart (Ref. 6, Webster).

The attainment of these goals is of course not the sole responsibility of a State Highway Department. We are convinced from our noise research to date that to materially reduce freeway traffic noise to the proposed values requires a concerted three-prolonged attack involving:

1. Reduction of noise from motor vehicles.

2. Adequate land-use zoning adjacent to highways by local government.

3. Proper highway design and location.

The most direct and effective approach to minimize traffic noise is to reduce the legally allowable noise emissions from motor vehicles and enforce these lower limits. The State of California has adopted a scale of required noise reductions for all new vehicles over a period of years and since 1968 the California Highway Patrol has had measurement and enforcement teams checking on noise levels during drivebys on our highways.

Another approach is through better control of the use of property adjacent to highways. The Department is strongly encouraging local jurisdictions having control of land use and structures that are to be built adjacent to freeways, to adopt land use plans, zoning, building and housing regulations that will be more compatible with the anticipated traffic noise. Good examples are air conditioned stores or office buildings, service stations, drive-ins and all businesses that depend on visibility to the passing motorist.

ClibPDF - www.fastio.com

WHAT ARE THE MOST EFFECTIVE CONTROLS AVAILABLE TO THE HIGHWAY DESIGNER?

The most effective controls are various forms of barriers. These may be any stout solid form that hides the vehicles from view when looking out of the nearest residential windows. The mass and stiffness should be sufficient to prevent bending or buckling in the strongest windstorms. There is no point in testing various materials for transmission loss because the leakage over the top of the barrier determines the net result. Any solid panel or form that can withstand the greatest anticipated wind load, without buckling, will make an effective bound barrier, if tall enough to intercept the noise path.

The most economical and visually acceptable barrier is a greenery covered earth berm. These are especially desirable along the crest of the cut slopes of depressed highways. The usual height required in this situation is only about six feet. Taller berns are needed for highways in flat terrain.

Another relatively inexpensive form of barrier is possible by converting the standard chain link fence (along the R/W) into a stucco wall (or by building a wall in lieu of the chain link fence during original construction). This has been done experimentally by attaching metal lath to the wire mesh and applying a scratch coat. This is followed by the spraying of two coats of concrete plaster (gunite) on each side of the structure. There are many other ways to construct such barriers.

Barrier Effectiveness

The most frequent question asked is how to estimate the noise reduction of a barrier. A Noise Nomograph (Figures 1 and 2) has been developed considering the theoretical approach of Michael Rettinger[7] and the later version of Rene Foss[8]. A cross section must be drawn to scale. A straight line is then drawn from the noise source epicenter to the nearest windows at ear height indoors.

The fundamental equation (from Michael Rettinger[7] is:

$$SLR = 3+10 \log [(1/2-x)^2 + (1/2-y)^2]$$

x and y are derived from a table of Fresnel Integrals offered by Rettinger[7].

For the convenience of the reader, we have reduced the complicated routine to a convenient Noise Nomograph. The required information on the cross section is:

ClibPDF - www.fastio.com

1. Distance A from source to barrier.

2. Distance B from barrier to receiver.

3. Height of noise source epicenter (given as 8 feet above pavement for a diesel truck).

4. Ear height of the receiver (typical 7 feet above ground at the nearest residential window).

5. Optical height (which is acoustical height) of the barrier, relative to a straight line between the "Noise epicenter" and the receiver ear height above ground.

Using the Noise Nomograph

The relationship V/H is determined by Distance A versus Distance B (on left chart). The "acoustical height" of the barrier will either be above (+) or below (-) the line between the source height and the receiver height. If the barrier is higher than the "acoustical path line" then H is greater than zero (H>0) so use the center chart on the nomograph. If the barrier is below the level of the acoustical path line, then H is less than zero (H<0) and you should use the right chart of the nomograph.

Sample diagrams are shown for three types of highways, Figures 3, 4, and 5, at grade in flat terrain; elevated; and depressed. Both unshielded and shielded examples are offered. The use of the Noise Nomograph should be obvious from the coding on the sample diagrams.

The Noise Nomograph provides an accurate figure for the Sound Level Reduction (SLR) of truck peak noise because it has been adjusted to agree with empirical noise measurements made in the field. The basic requirement for field proof testing demands strict site conditions near the barrier; i.e., the local noise background from all other sources must be more than 10 dB under the truck noise you are trying to measure at the shielded microphone position behind the barrier. If this condition is not met, you cannot measure the noise reduction of the barrier. You will be measuring in a sea of unwanted noises. Failure to observe this site requirement will result in false conclusions that barrier(s) do not perform up to expectations. This may be the reason for some of the apparent disparities found in recently presented papers by other investigators.

The now well known experimental Milpitas noise barrier (Route I680) offered nearly ideal conditions for testing before the

ClibPDF - www.fastio.com

one mile shielded section was opened to traffic. Figure 6 is the test site. The results of twenty runs (ten in each direction) with simultaneous measurements on the unshielded and the shielded sides, and with both microphones at 80 feet from a fully loaded diesel truck are shown in Figure 7. A chart of the 20 test runs is shown as Figure 8. The average noise reduction was 15.65 dB on the shielded side of the highway.

The microphones were then moved twice as far away and ten more runs were made (five in each direction). The noise attenuation offered by the barrier (in addition to distance losses) was 15.4 dB. The decibel readings and chart of these runs are shown in Figures 9 and 10 respectively.

The results on this and other experiemental barriers tested by our organization indicate the definite reduction in noise levels attained by a barrier.

CONCLUSIONS

In conclusion, we believe that the California test method developed after some fifteen years of study, provides a simple, straight forward procedure for measuring existing and predicting future noise levels in measurable numerical terms. It does not require any complicated procedures, computations or a computer program. The only requirement is a simple sound level meter and an easy to use chart derived from hundreds of actual on-site noise level readings.

The approach of deciding on remedial measures based on measuring the range of truck peaks has proven to be the most nearly responsive to our most frequent complaint. The most frequent complaint emanates from the inability to sleep because of residential noise intrusions from bursts of high level noise from passing diesel powered trucks.

Our studies to date on actual field tests of experimental barriers clearly indicate the marked reduction in noise levels that may be attained by proper design and construction of this type of noise attenuation device.

ClibPDF - www.fastio.com

REFERENCES

1. Beaton, J. L. and Bourget, Louis, Can Noise Radiation from Highways be Reduced by Design? Highway Research Board 232, Publication 1619 (1968). Published by Highway Research Board, Washington, D.C. (Chart Fig. 3)

2. Test Method No. Calif. 701-A.

3. Section 216 of the California Streets and Highway Code.

4. Kryter, Karl, The Effects of Noise on Man, Academic Press, 1970. New York and London.

5. Welch, Bruce L. and Welch, Annemarie S., Physiological Effects of Noise, Plenum Press, New York, London, 1970.

6. ASHA Reports Number 4, Noise as a Public Health Hazard, Proceedings of the Conference. A publication of the American Speech and Hearing Association, Washington, D. C., February 1969.

7. Rettinger, M., Noise Level Reduction of Barriers, Noise Control (PER) September 1957. (Former publication of the Acoustical Society of America.)

8. Foss, Rene, NOISE, Western ITE, April - May 1971. (Official Publication of the Western Section, Institute of Traffic Engineers.)

ClibPDF - www.fastio.com

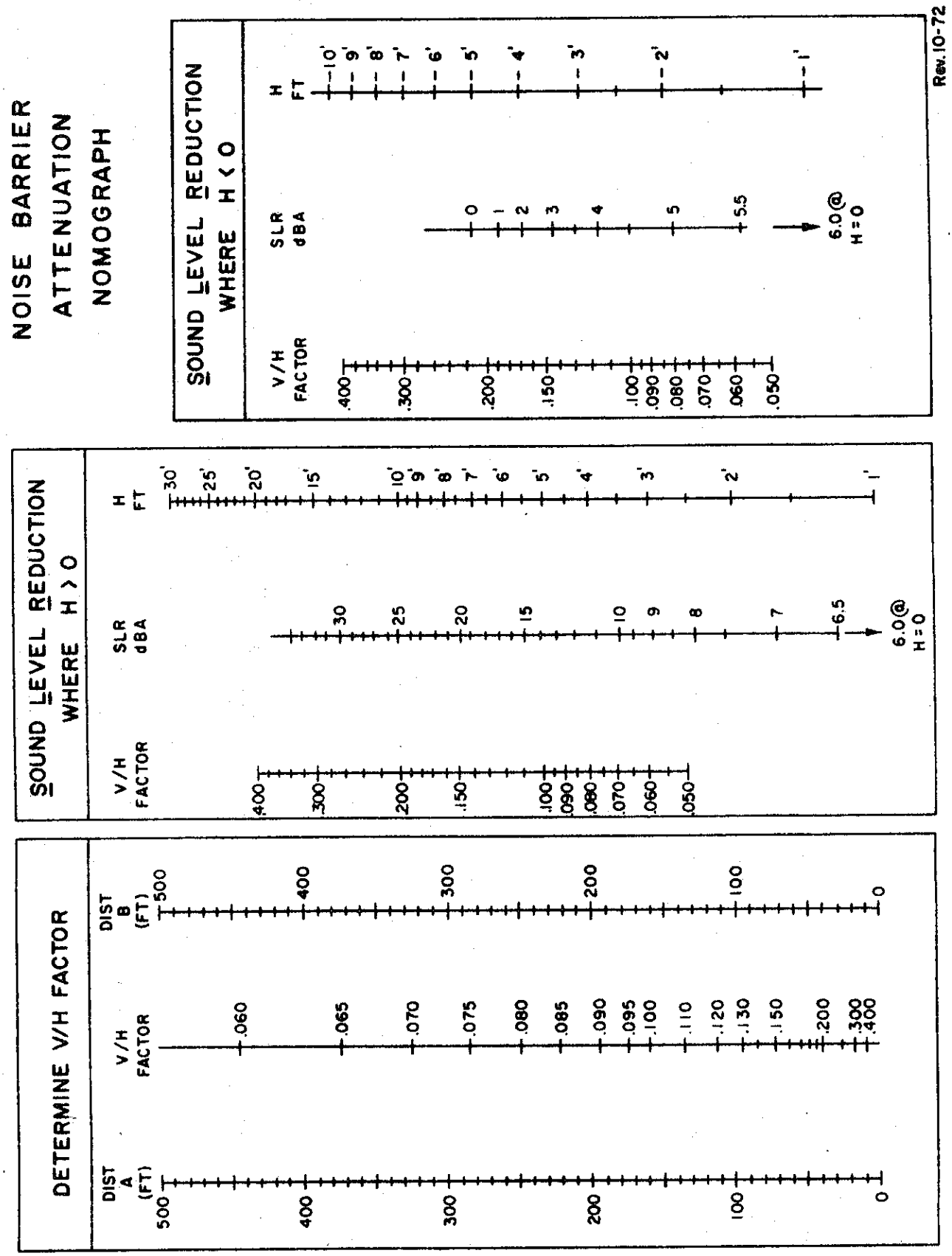

Figure I

ClibPDF - www.fastio.com

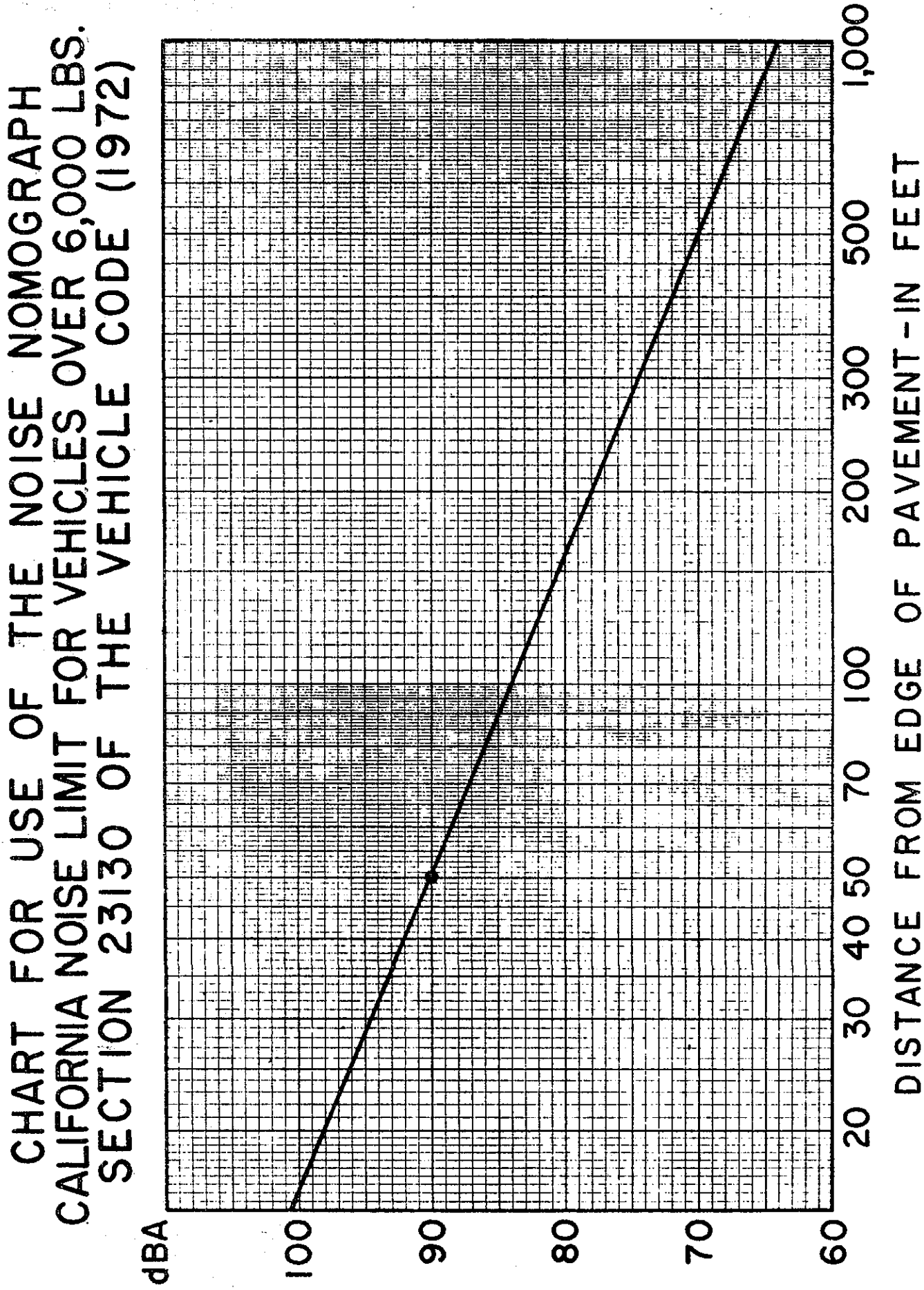

Figure 2

ClibPDF - www.fastio.com

USING THE NOISE NOMOGRAPH ON HIGHWAYS IN FLAT TERRAIN

CONVENTIONAL DESIGN

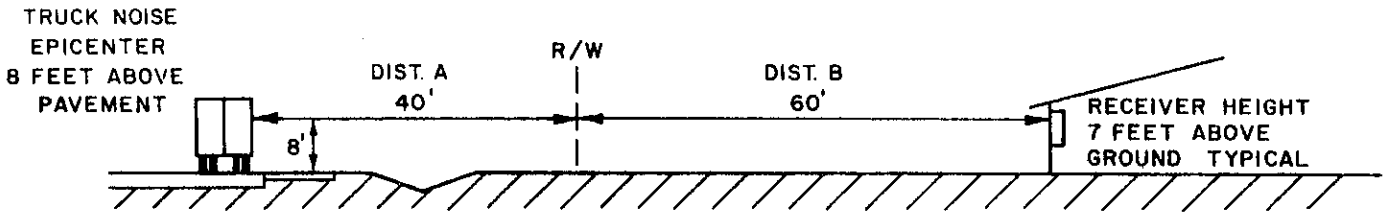

LEGAL MAX. FROM A FULLY EXPOSED TRUCK = 84 dBA (@ 100')
SOUND LEVEL REDUCTION 0
NOISE AT RESIDENCE = 84 dBA

SHIELDED DESIGN

V/H = .18
H = 3.5
SLR = 15.5 dBA

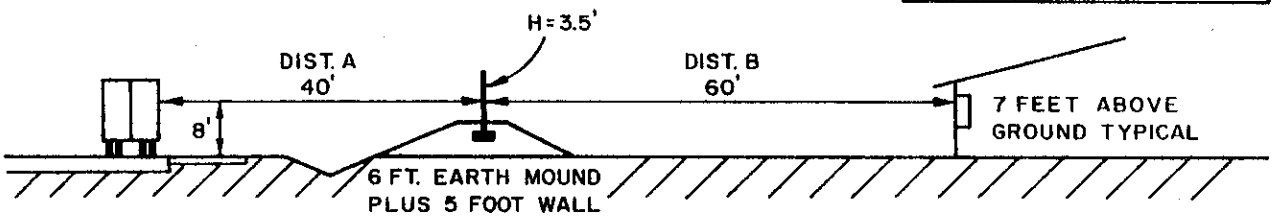

LEGAL MAX. FROM A FULLY EXPOSED TRUCK = 84.0 dBA
(SLR) SOUND LEVEL REDUCTION = -15.5
NOISE AT RESIDENCE = 68.5 dBA

NOTE:
THE NOISE BARRIER HEIGHT IS THE PORTION "H" ABOVE A LINE FROM THE SOURCE EPICENTER TO EAR HEIGHT AT THE RECEIVING POSITION.

Scale
0' 10'

Figure 3

ClibPDF - www.fastio.com

USING THE NOISE NOMOGRAPH ON ELEVATED HIGHWAYS

CONVENTIONAL DESIGN GUARD RAIL ONLY

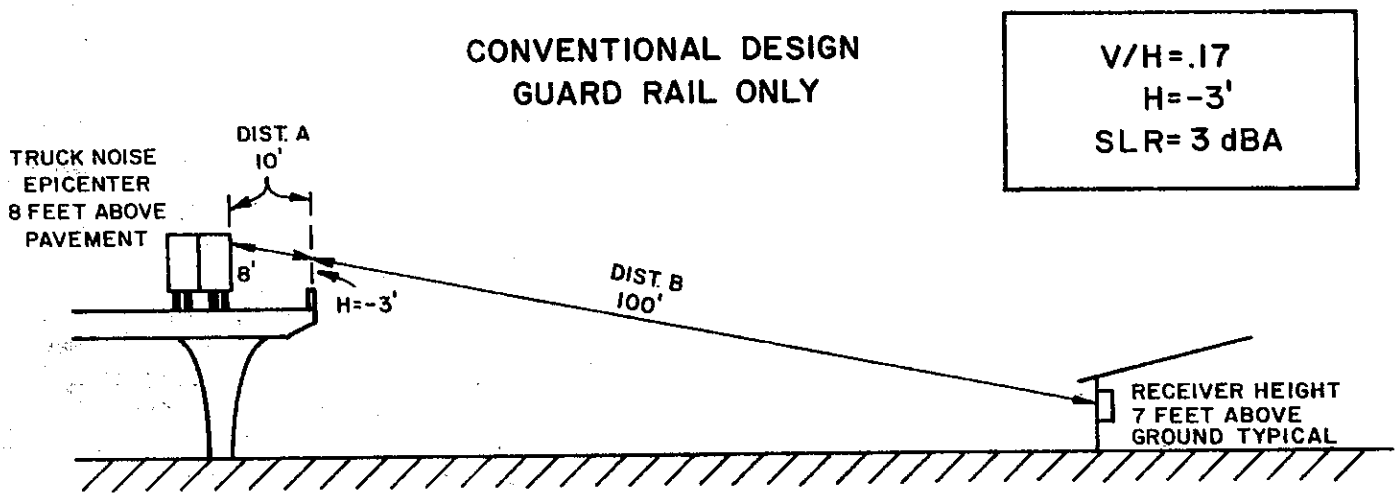

LEGAL MAX. FROM A FULLY EXPOSED TRUCK = 83 dBA(@ 110')
(SLR) SOUND LEVEL REDUCTION = - 3
NOISE AT RESIDENCE = 80 dBA

SHIELDED DESIGN WITH A 6 FOOT BARRIER ADDED ABOVE THE 2 FOOT GUARDRAIL (TOTAL 8')

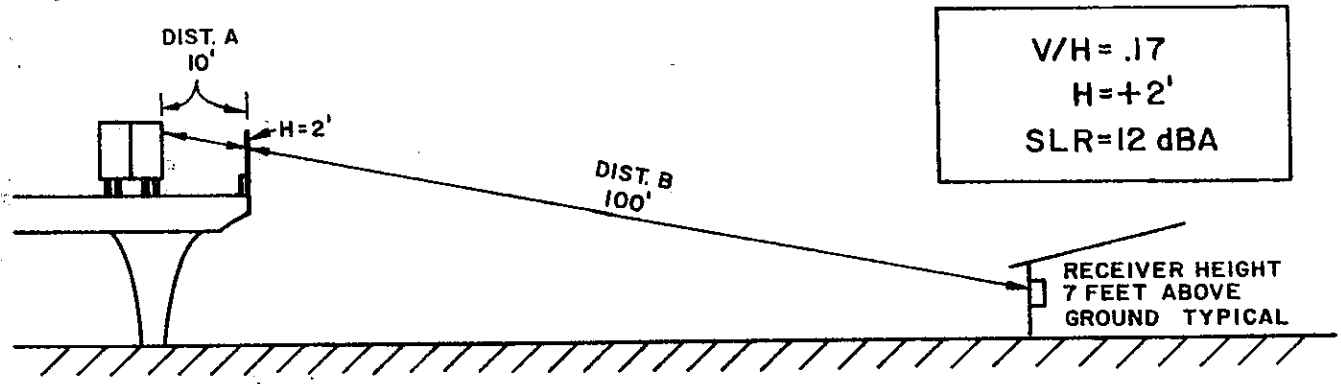

LEGAL MAX. FROM A FULLY EXPOSED TRUCK = 83 dBA
(SLR) SOUND LEVEL REDUCTION = -12
NOISE AT RESIDENCE = 71 dBA

Scale
0' 10'

Figure 4

ClibPDF - www.fastio.com

USING THE NOISE NOMOGRAPH ON DEPRESSED HIGHWAYS

CONVENTIONAL DESIGN

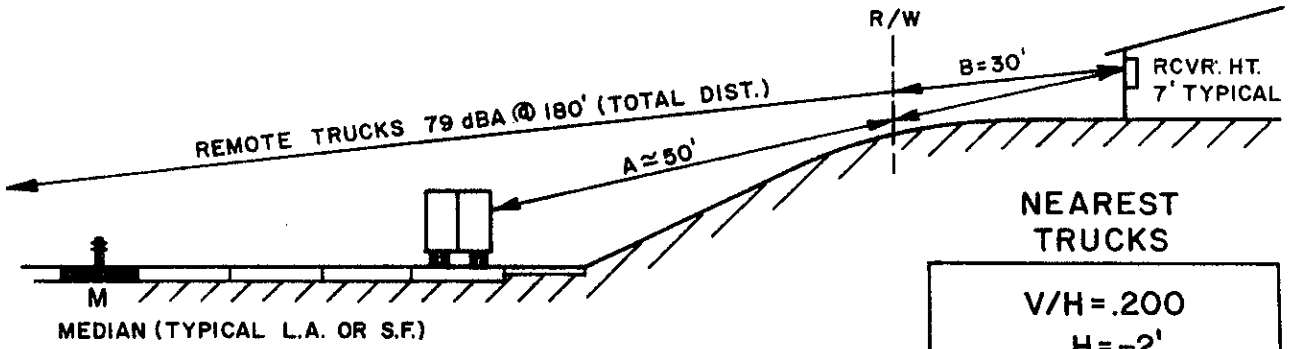

NEAREST TRUCKS

V/H=.200
H=-2'
SLR=3.5 dBA

LEGAL MAX. TRUCK NOISE @ 80' = 86.0 dBA
(SLR) SOUND LEVEL REDUCTION -3.5
NOISE AT RESIDENCE 82.5 dBA = NEAREST TRUCKS

SHIELDED DESIGN

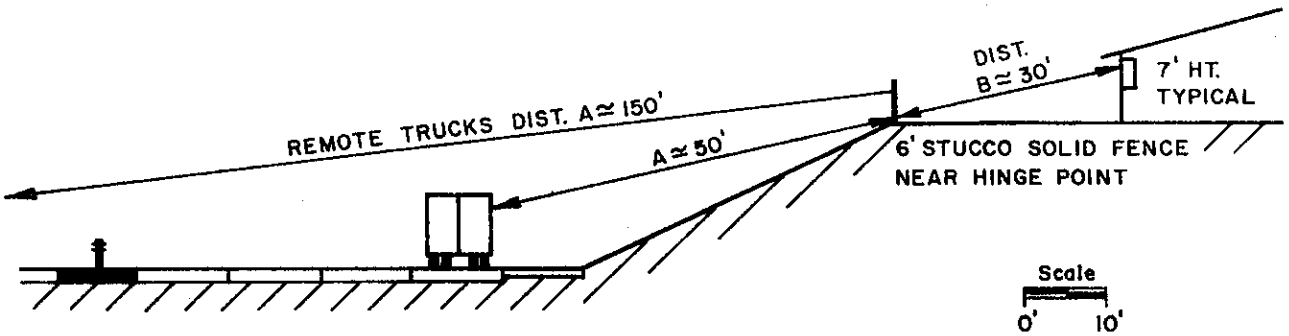

REMOTE TRUCKS

V/H=.135	79.0 dBA
H=2'	-10.5 SLR
SLR=10.5	68.5 dBA

NEAREST TRUCKS

86.0 dBA	V/H=.200
-18.7 SLR	H=5'
67.3 dBA	SLR=18.7dBA

Figure 5

ClibPDF - www.fastio.com

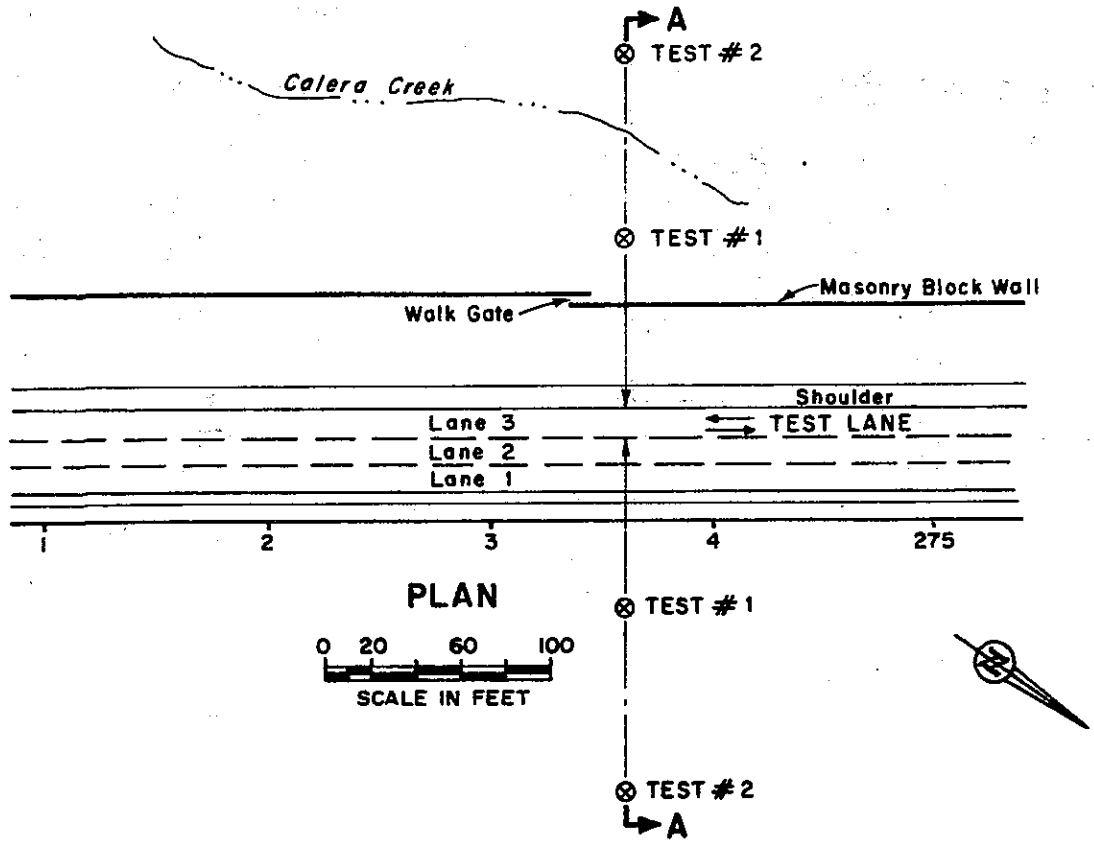

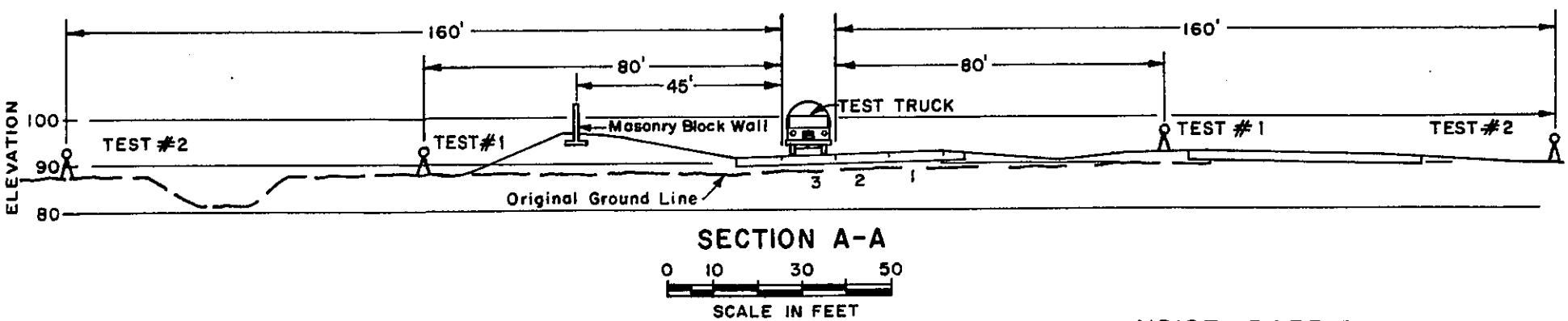

NOISE BARRIER
MILPITAS, CALIFORNIA
ROAD 04-SCI-680
PM 9.2

Figure 6

ClibPDF - www.fastio.com

FIGURE 7

NOISE BARRIER TESTS AT 80 FEET FROM

THE PATH OF AN UNMUFFLED DIESEL TRUCK

Run	Exposed Side	Shielded Side	Noise Reduction
N-1 North	92.0 dBA	74.5 dBA	17.5 dBA
S-1 South	90.0	75.0	15.0
N-2 North	93.0	76.0	15.5
S-2 South	92.0	76.5	15.5
N-3 North	91.0	74.0	17.0
S-3 South	90.5	75.5	15.0
N-4 North	92.0	75.0	17.0
S-4 South	91.5	78.0	13.5
N-5 North	93.5	75.0	18.5
S-5 South	89.0	75.0	14.0
N-6 North	92.0	76.0	16.0
S-6 South	90.5	77.5	13.0
N-7 North	92.0	76.5	15.5
S-7 South	91.0	77.0	14.0
N-8 North	93.0	74.0	19.0
S-8 South	91.5	77.0	14.5
N-9 North	93.5	77.0	16.5
S-9 South	86.5	72.5	14.0
N-10 North	92.5	77.0	15.5
S-10 South	90.0	75.0	15.0
Averages	91.35 dBA	75.70 dBA	15.65 dBA

ClibPDF - www.fastio.com

Figure 7 (Continued)

The average noise reduction was 15.65 dBA for the test truck, which was a large diesel tanker with no muffler and a high vertical exhaust pipe on right side. This is equal to moving the truck about 5 times further away and reducing loudness by about 3 to 1.

(End Figure 7)

ClibPDF - www.fastio.com

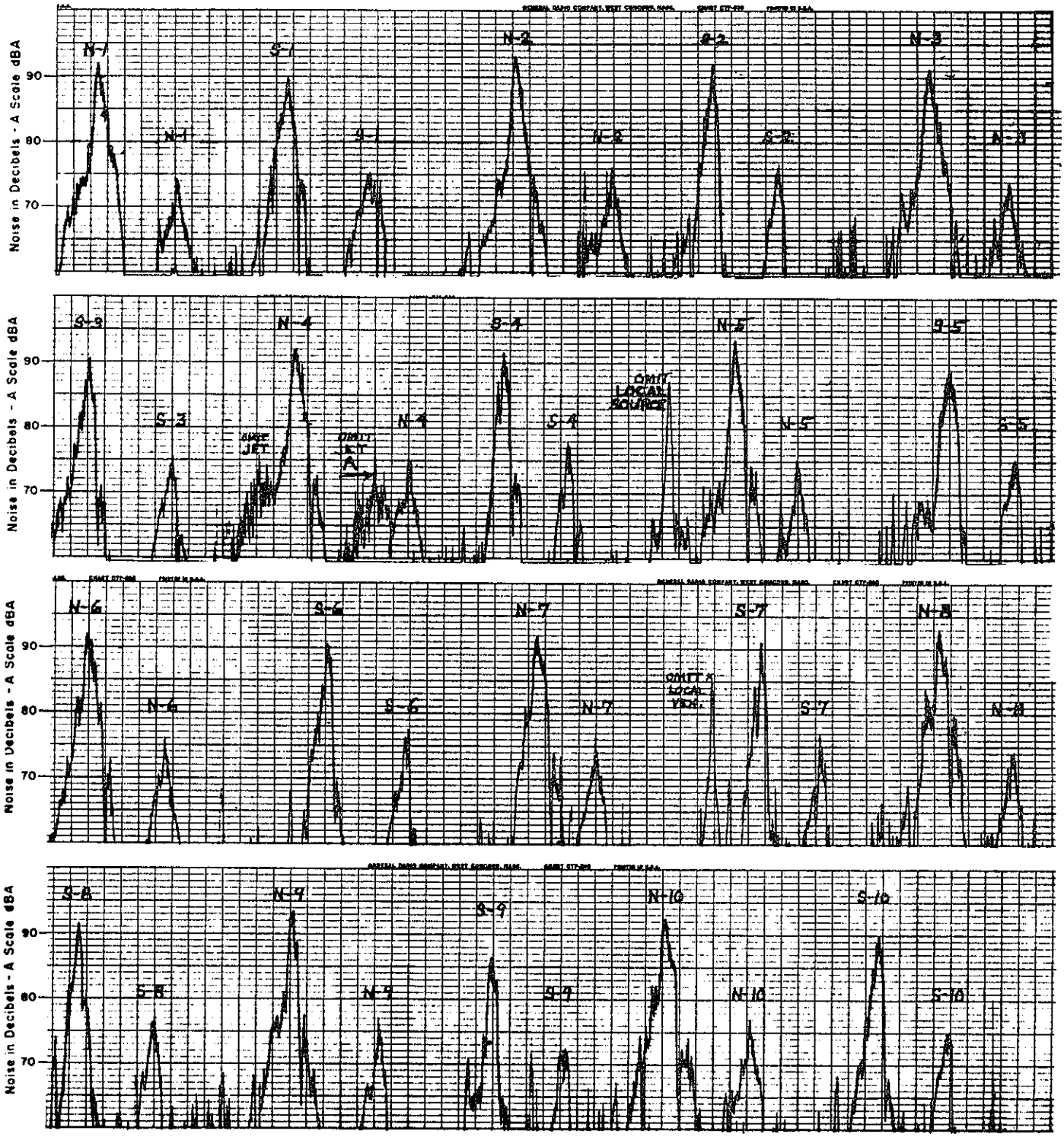

NOISE BARRIER TESTS AT 80 FEET FROM THE PATH OF UNMUFFLED DIESEL TRUCK

HIGHER PEAKS FROM EXPOSED SIDE.

LOWER PEAKS FROM SHIELDED SIDE.

Figure 8

ClibPDF - www.fastio.com

FIGURE 9

NOISE BARRIER TESTS AT 160 FEET FROM
THE PATH OF AN UNMUFFLED DIESEL TRUCK

Run	Exposed Side	Shielded Side	Noise Reduction
S-11 South	87.0 dBA	72.0 dBA	15.0 dBA
N-11 North	89.5	71.0	18.5
S-12 South	86.0	72.0	14.0
N-12 North	86.5	70.5	16.0
S-13 South	83.0	67.5	15.5
N-13 North	86.5	69.5	17.0
S-14 South	82.0	69.5	12.5 - Jet Air Interfer.
N-14 North	85.5	70.5	15.0
S-15 South	84.5	70.0	14.5
N-15 North	86.0	70.0	16.0
Averages	85.65	70.25	15.4

The truck noise is nearly 6 dBA less at this greater distance but the additional noise reduction offered by the barrier is 15.4 dBA. This is virtually the same as that measured at the 80 foot distance.

ClibPDF - www.fastio.com

APPENDIX

TEST METHOD NO. CALIF. 701-A

ClibPDF - www.fastio.com

METHOD FOR MEASURING NOISE LEVELS

Scope

The procedures for measuring noise levels in areas adjacent to proposed or existing highways are described in this test method. A procedure is also described for estimating future noise levels from either new construction or changes in existing roadways.

This test method is divided into three parts. Two methods of noise measurement are described in the first two parts.

Part I. Visually Observed dBA Levels on a Sound Level Meter (SLM)

Part II. Chart Recorded dBA Levels Obtained from a Sound Level Meter and Graphic Level Recorder

Part III. Noise Study Reports

General

Sound level meters measure the intensity level of sound in decibels (abbreviated "dB").

Sound intensities in highway work are normally measured on the A scale. This is chosen because it more nearly parallels human response for the noise studied than do the two other scales (B and C) in common use.

Both methods of noise measurement described in this test method use the same SLM and have the same inherent accuracy. The visual method permits the operator greater freedom in reaching difficult locations. It also permits conversing with an assistant when necessary without including this noise as part of the record. The chart method provides a permanent record but may restrict mobility in the field because an AC power source is required. The operator must also identify the source of noise peaks on the chart so that unrelated local sources are not counted as roadway noise. The chart method offers a wider dynamic range and eliminates the need for frequent changing of the decibel range switch on the Sound Level Meter.

The greatest noise exposure and changes in levels will occur at the nearest remaining frontage buildings after the construction of a roadway. Therefore, the most important measurements and noise projections will be at this distance from the roadway edge of pavement (EP), particularly near schools, residences, apartments, convalescent homes and hospitals.

The more remote dwellings, if protected by intervening buildings that obscure direct line of sight noise paths, may have from 5 to 15 dBA of extra noise shielding over that offered by distance alone. However, exposed buildings or parts of buildings will not have this extra noise protection.

Before and after noise measurements at public schools are particularly important in compliance with the requirements of Section 216 of the Streets and Highways Code.

Apparatus—for Visual Measurements

1. Sound Level Meter (abbrev. SLM) ANSI Specification S1.4-1961
2. Sound Level Calibrator designed for the SLM.
3. Supporting stand or tripod (a tripod adapter may be obtained for the SLM at any camera supply store).
4. Wind Screen, General Radio type 1560-9521; or a frame conforming to following requirements: A windscreen frame large enough to hold the entire SLM with the Sound Level Calibrator on the microphone. The open frame may be of wood or metal with the front, top and sides covered with metal window screen and open mesh plastic grille cloth. The base should have rubber feet and a tripod socket for ¼" bolt, 20 thread/inch. The wind screen must be a locally fabricated item. Noise measurements should not be made when winds exceed 15 mph. The wind screen is useful in winds from 10 to 15 mph. Wind flutter should be at least 10 dBA below the noises you are trying to measure.
5. Note pad and pencils.

Apparatus—for Graphic Level Recording

1. In addition to the five items listed under Apparatus for Visual Measurements the following additional equipment will be needed:

a. Graphic Level Recorder, designed for use with the Sound Level Meter.

b. A power inverter for operating the recorder from an automobile: Power inverter, 12 volts DC to 110/120 volts, 60 Hz AC rated at 75 to 100 watts, with adapter cord and plug for cigarette lighter socket. Examples:

ATR—Model 12 T-RME,
Terado—Model 50-127,
CDE—Model 12B-8 or equal

2. A 12-foot AC extension cord.
3. Cable: 30 feet of RG/62U (or RG 59/U) coaxial cable with a standard phone plug at one end and banana plugs at the opposite end; to connect the SLM to the Graphic Level Recorder. This must be locally fabricated.
4. Optional: A 100-foot cable and reel similar to Item 3, locally fabricated.

Preliminary Preparation

Before leaving for the field:

1. Test the SLM batteries.

Raise the microphone. Switch to each of the three battery test positions, FIL 1, 2 and PL. Good batteries will read above the center of the white band marked BAT on the meter.

2. Calibrate acoustically.

Set the SLM to 110 on the *C* scale. Check the acoustical calibrator battery (once briefly) and switch to 500 Hz. The calibrator supplies a 114 *dBC* level to the SLM microphone. Rotate the CAL control on the SLM to read 114 *dBC*. Switch the SLM to the A scale. The meter should read 111 dBA within 0.5 dBA. This completes the calibration. The 500 Hz setting is the most accurate factory setting on the calibrator.

ClibPDF - www.fastio.com

PART I. VISUAL SLM MEASUREMENTS

A. Procedure

1. Identify the location; the distance to predominant noise sources, highway or local street EP; and the environment; residential, school or other. Record the date and time of day.

2. Most measurements should be made at about 5 feet above ground or at window height.

3. Set the meter switches to the FAST position and the A scale.

4. Start with the meter range at 100 dBA and switch down to a lower scale until the meter yields visible readings.

5. Record all noise peak readings and typical background levels. A ten minute period will usually suffice where noise peaks are fairly persistent. Wide variations may require longer sampling. Highway noise peaks, if present, should be separately identified from local traffic or other noise sources.

B. Noise Evaluation

1. If the location is reasonably quiet, say 50 to 60 dBA or less, the automobiles are rare and no higher than 65 dBA, the background noise will determine the description of the noise environment.

2. If the location is exposed to frequent noise peaks from local or highway traffic the noise character will be determined by the range of the noise peaks. If the highest noise peaks exceed the background by 12 dBA or more, identify the range of these peaks and the mean of the highest 12 dBA region. For example: Peak range 70 to 82 dBA; mean peak value 76 ± 6 dBA.

3. If the peak noises are frequent but exceed the background by less than 12 dBA, identify the peak range and the mean peak level. For example: Peak range 76 to 84 dBA; mean peak value 80 ± 4 dBA.

PART II. CHART RECORDED dBA LEVELS OBTAINED FROM A SOUND LEVELMETER AND GRAPHIC LEVEL RECORDER

A. Procedure

General procedure is the same as for visual measurement.

With the sound meter and the recorder both turned off:

1. Plug the recorder into a 110 volt AC power source but leave it turned off at this time.

2. Connect the coaxial cable from the OUTPUT of the SLM, to the input of the recorder. Observe polarity. The shield (or ground) goes to the Black terminal, and the center lead goes to the Red terminal.

3. Set the INPUT ATTENUATOR to 30, the WRITING SPEED to 10, and the right hand chart drive to neutral "N". Roll out a few inches of chart paper. Note your location, date, distance from EP or local street, time of day and any other pertinent information: traffic exposed or shielded from view; outside or inside of building, windows partly open or closed.

4. Insert a pen in the recorder and turn on the power switch. The pen carriage will oscillate once or twice and come to rest. Turn on the SLM; switch to 110 dBC and acoustically calibrate at 500 Hz 114 dBC. The recorder pen should land four lines left of center. Adjust pen position with CAL button (at lower left of recorder panel). Switch to A scale on the SLM. The recorder pen should now be one line left of center (111 dBA). The recorder is now calibrated. From here on the dBA range selected on the SLM will become the chart centerline. If the SLM range is set to 70 dBA the center of the chart will be 70 dBA and the recorder will have a range of 50 to 90 dBA (20 divisions either side of center). *Always mark the chart center according to the dBA range selected on the SLM. If you change this setting, stop the chart, and change your marking.*

5. A 70 dBA center is usually adequate for exterior recordings at 100 feet or more from diesel trucks. An 80 dBA center may be needed at distances between 50 and 100 feet. Indoor noise measurements usually take a 60 dBA center. A 50 dBA center may be needed in very quiet locations.

6. The recorders are equipped with a medium speed motor, $\frac{1}{8}$ of the chart speed marked on the panel. Gear settings of 1 x 7.5 should give a chart speed of 1.5 inches per minute. This is the preferred chart speed. Set the gears and turn on the chart motor when you are ready to record. Avoid talking near the sound level meter. Peak noises should be coded on the chart: T for trucks, M—motorcycles, A—aircraft, C—cars. Local sources of noise peaks should be separately identified.

B. Noise Evaluation

Follow same procedure as for Noise Evaluation in Part I.

PART III. NOISE STUDY REPORTS

A. Procedure

1. The purpose of the noise report is to identify the existing preconstruction noise levels and the estimated future levels during roadway operation. A comparison of the following *before and after information* is most important:

a. Approximate distance to edge of pavement and other significant noise sources.

b. Typical background levels.

c. Range of peak noise levels and the approximate occurrence rate per hour.

2. The future typical noise range from trucks (± 6 dBA) can be estimated at any exposed distance from the EP of conventional roadways with the graph shown in Figure 1.

3. In using this chart, note that the full amount of noise reduction offered by a depressed freeway applies only where visible sight of the vehicles will be cut off at the residential windows according to the cross section employed. If the nearest residences are ex-

ClibPDF - www.fastio.com

posed, the noise will be equal to a flat section at a similar line of sight distance.

4. The noise advantage of an elevated highway applies only to adjacent single story structures 20 feet or more below the grade of the highway. It does not apply to the exposed upper levels of multi-story apartments nor to higher exposed slopes that equal or exceed the height of the highway. These exposures will also be equal to a flat section at a similar line of sight distance.

5. If the design of the future highway has not been determined, it is conservative engineering practice to estimate future noise on the basis of the most fully exposed and least favorable condition.

6. Realignment or widening that brings an exposed freeway EP closer to prior exposed frontage buildings will increase the noise as follows:

Percent Loss of Setback Distance	*Noise Increase*
20%	2.0 dBA
29	3.0
37	4.0
44	5.0
50	6.0
55	7.0
60	8.0
64	9.0
68	10.0
75	12.0

REFERENCE

ANSI Specification S 1.4-1961

End of Text on Calif. 701-A

ClibPDF - www.fastio.com

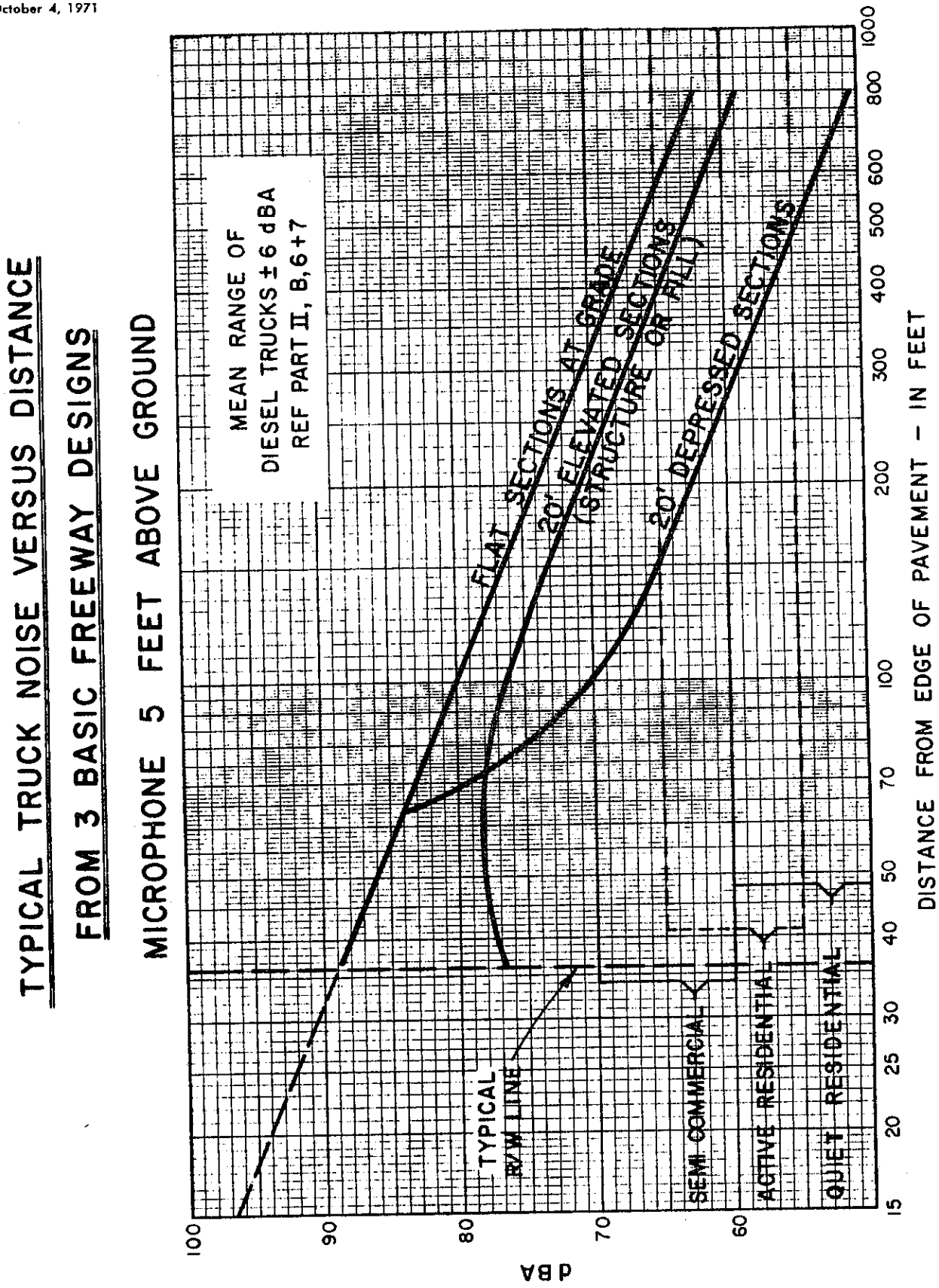

Figure 1

△82060—500 6-71 6,700

ClibPDF - www.fastio.com

ClibPDF - www.fastio.com