H34

NOT FOR PUBLICATION

265

HIGHWAY RESEARCH REPORT

DYNAMIC TESTS OF AN ENERGY ABSORBING BARRIER EMPLOYING STEEL DRUMS

By
Eric F. Nordlin, James H. Woodstrom
and Robert N. Doty

71-31
DVD

Presented at the 50th Annual Meeting
of the Highway Research Board
January, 1971

STATE OF CALIFORNIA

BUSINESS AND TRANSPORTATION AGENCY

DEPARTMENT OF PUBLIC WORKS

DIVISION OF HIGHWAYS

MATERIALS AND RESEARCH DEPARTMENT

RESEARCH REPORT

NO. M & R HRB 636405-2

Prepared in Cooperation with the U.S. Department of Transportation, Federal Highway Administration January, 1971

ClibPDF - www.fastio.com

71-31

DND

ClibPDF - www.fastio.com

METS 96-07

Large L crash

Gauthier X7260

Stoughton

last pg p 41

appendices E + bib

ClibPDF - www.fastio.com

Here's where we can help you. Our
years experience with our firm. Their
to 50% a year on document costs. No,
at what we do.

We can show you how to shop for a new
in the real acquisition and operating cost
you, we'll even tell you that too! SOS's
ships. Since our sales staff is tenured,
best for you.

Please call us today for a free product e

"What we are reall

STANDARD C

SACRAMENTO (916) 489-2679 • STOCKTC

THE COPY COP

ClibPDF - www.fastio.com

State of California
Department of Public Works
Division of Highways
Materials and Research Department

DYNAMIC TESTS OF AN ENERGY ABSORBING BARRIER EMPLOYING STEEL DRUMS

ERIC F. NORDLIN
Assistant Materials and Research Engineer

JAMES H. WOODSTROM
Senior Materials and Research Engineer

ROBERT N. DOTY
Associate Materials and Research Engineer

Presented at the 50th Annual Meeting

of the

Highway Research Board

January 1971

ClibPDF - www.fastio.com

ClibPDF - www.fastio.com

ABSTRACT

REFERENCE: Nordlin, E. F., Woodstrom, J. H., and Doty, R. N., "Dynamic Tests of an Energy Absorbing Barrier Employing Steel Drums", State of California, Department of Public Works, Division of Highways, Materials and Research Department. Research Report HRB 636405-2, October, 1970.

ABSTRACT: The results of three full scale vehicle impact tests of an energy absorbing barrier employing 55 gallon tight-head steel drums are reported. The 19.6' long test barriers were designed as gore installations. They were placed in front of a modified California Type 8 Bridge Approach Guardrail for the tests, which were conducted with 1968 sedans weighing approximately 4700 lbs. and traveling at speeds of from 54 to 64 mph. The tests were run head-on and at 9° with the barrier axis into the barrier nose and at 11° with the barrier axis midway along the side of the barrier.

The headon and angle impacts into the nose of the barrier resulted in vehicle passenger compartment decelerations less than the 12 G limit suggested by the Federal Highway Administration. Vehicle damage was moderate. The vehicle remained stable and upright during impact. During these high speed impacts, almost all the drums in the barriers were crushed to some extent. Extensive repairs were required to restore the barrier to a functional unit after each test.

The impact into the side of the barrier did not produce completely satisfactory results. The vehicle was redirected, but partially by the bridge approach guardrail behind the barrier.

The results of the three tests indicate that the barrier's effectiveness in reducing the severity of most impacts is such that it should be used operationally on an experimental basis. However, future refinements in the design need to be made, particularly with regard to redirection of vehicles that collide with the side of the barrier.

A study of accident statistics and human tolerance to deceleration is also summarized. This study indicated that the deceleration imparted to the impacting vehicle should be as low as possible - perhaps lower than in some current criteria.

KEY WORDS: Barriers, dynamic tests, impact tests, attenuation, bumpers, cushioning, energy absorbers, kinematics, vehicle dynamics

ClibPDF - www.fastio.com

ClibPDF - www.fastio.com

TABLE OF CONTENTS

		Page
	ABSTRACT	
I.	INTRODUCTION	1
II.	OBJECTIVE	3
III.	CONCLUSIONS	4
IV.	DESCRIPTION OF TEST BARRIER	5
V.	DESCRIPTION OF TESTING	
	Introduction	10
	Instrumentation	10
	Photography	13
VI.	TEST RESULTS	
	Summaries of Each Test	
	Test 221 (64 mph Headon)	14
	Test 222 (60 mph 11° Side)	18
	Test 223 (54 mph 9° Nose)	21
	Discussion	25
	Implementation	29
VII.	REFERENCES	30
	EXHIBITS	

ClibPDF - www.fastio.com

ClibPDF - www.fastio.com

I. INTRODUCTION

This research project was initiated because of a concern about the increasing incidence and the relative severity of accidents involving errant vehicles impacting fixed objects located adjacent to California's freeways. On the California freeway system in 1967 and 1968, about one-half of all the fatalities, an average of 430 a year, were caused by ran-off-the-road type accidents. Of this number, 225 fatalities (over 25% of all freeway fatalities) were the result of hitting a fixed object. The types struck most frequently were abutments and piers, bridge rails, guardrail at fixed objects, steel sign poles, light poles, and cable type median barriers.

In an attempt to decrease the frequency of these relatively severe ran-off-the-road accidents, the California Division of Highways is now striving to provide a minimum of 30 feet of recovery area alongside the traveled way into which an out-of-control vehicle can intrude without striking an immovable or unprotected fixed object. This area will provide the "forgiving quality" that allows the driver of the distressed vehicle a reasonable chance for recovery.

Within this program, every effort is first made to eliminate the fixed object. If it cannot be eliminated, an attempt is then made to incorporate breakaway features. In this regard, all lighting standards and roadside sign supports on new California freeways are now "breakaway". In cases where the fixed object can neither be eliminated nor made to yield, protection in the form of guardrail is now being provided.

Recent improvements in bridge approach guardrailing, confirmed by full scale tests[1,2], should minimize the probability of impact into the ends of bridge barrier rails. However, one of the remaining problems for which no satisfactory solution has been developed is protection from hazardous fixed objects located in the gore area at freeway off ramps. Collisions with the concrete wedge-shaped deflectors and/or large overhead sign supports often found in these gores are usually very severe. Consequently, the California Division of Highways has been involved in a research program to investigate and/or develop energy absorption barriers for use in gore areas for the last two years in an effort to alleviate this problem.

An energy absorbing barrier is a cushioning device that can be placed in front of or around a fixed object. The barrier will absorb a large portion of the energy involved in a high speed head-on or oblique angle impact, thereby reducing the deceleration force on the vehicle, and will usually decrease the severity of the injuries sustained by the vehicular occupants. Some of the

ClibPDF - www.fastio.com

variables that must be considered when designing these barriers include vehicle size, shape, speed, crushability, passenger compartment layout and construction; impact angle; occupant age, size, sex, physical condition, and use and type of restraint systems; and the physical limitations of space and, in some cases, anchorages on the freeway itself.

The California Division of Highways Materials and Research Department has tested three types of energy absorption barriers to date. These barriers employed (1) water-filled plastic cells, (2) 55-gallon tight-head steel drums, and (3) plastic drums containing sand. The results of eight tests of barriers employing water-filled plastic cells will be documented in a report entitled "Dynamic Tests of an Energy Absorbing Barrier Employing Water-Filled Cells" to be available about November, 1970. The testing of a barrier employing sand-filled plastic containers is still in progress. The three tests reported herein were of barriers containing 55 gallon tight-head steel drums as the primary energy absorbing mode.

The results of research at the Texas Transportation Institute (TTI) of Texas A & M University indicated that the resistance to deformation of modified 55 gallon tight-head steel drums could be effectively utilized to decelerate a standard size vehicle traveling 60 mph[3]. A series of tests at TTI consisted of three 50-60 mph headon tests and three 40-50 mph tests at angles of 20° (one test) and 30° (two tests) with the barrier axis. The weights of the test vehicles varied from 3200 to 4400 pounds. Although the results of these six TTI tests were generally favorable, additional testing using heavier vehicles (4700 lbs.±) impacting headon and at 10°-15° angles into the front and side of the barrier were felt to be more representative of the conditions encountered on California highways. The utilization of a fendering system similar to that employed for the water-filled cell barrier[4] was also considered advisable. Consequently, the series of three tests reported herein was conducted.

This work was accomplished in cooperation with the United States Department of Transportation, Federal Highway Administration, as Item D-4-69 of Work Program HPR-PR-1(8), Part 2, Research. The opinions, findings, and conclusions expressed in this publication are those of the authors and not necessarily those of the Federal Highway Administration.

ClibPDF - www.fastio.com

II. OBJECTIVE

The objective of this research was to conduct instrumented vehicular impact tests of energy absorbing barriers incorporating 55 gallon tight-head steel drums and, based upon the results of these tests, determine the degree to which these barriers would minimize the hazards created by many existing gore separation structures and other fixed objects. The criteria itemized below were used to evaluate the barrier design:

1. The impact severity for the occupants of errant vehicles involved in head-on collisions into fixed objects located in gores must be reduced to a survivable level at impact velocities of 60 mph and less.

2. The energy absorbing barrier should be at least as effective as California's current anchored "W" beam guardrail in redirecting vehicles impacting at oblique angles into the side of the barrier.

3. The barrier components should not be susceptible to dislodgement or ejection onto the traveled way such that they become a hazard to adjacent traffic when an impact occurs.

4. First cost and maintenance costs should be economically feasible.

5. On-site repair time should be minimal because of the safety hazards to maintenance personnel and adjacent traffic when field repairs are in progress.

ClibPDF - www.fastio.com

III. CONCLUSIONS

The results of the three full scale tests reported herein indicate that the hazards presented by many existing gore separation structures and other fixed objects can be significantly reduced by providing protection with energy absorbing barriers incorporating 55 gallon tight-head steel drums.

The electronically measured decelerations, confirmed by analysis of the photographic data, indicated that occupants of full size vehicles (4700 lbs. including occupants) impacting these barriers at 60 mph will, in most cases, sustain little or no injury if wearing a lap belt and shoulder harness, minor injuries if wearing only a lap belt, and moderate injuries if unrestrained.

The fendering system tested did not satisfactorily redirect a vehicle impacting midway along the side of the barrier at an 11° angle with the barrier axis. Also, the debris that resulted from this collision would definitely have been hazardous to adjacent traffic. Consequently, the fendering system included on the test barriers should not be used for an operational installation. Further developmental work on a fendering system is required. However, the test barrier's effectiveness if struck within 10° of headon is such that its inability to redirect vehicles colliding with its side should <u>not</u> preclude its use in trial installations.

The reported average first cost of each of three freeway installations of energy absorbing barriers incorporating 55 gallon drums near Houston, Texas, was $3,600. As would be the case with most barriers, some on-site preparation was included in this cost. These barriers contained no fendering systems. The drums themselves, as used for the tests reported herein, cost $9 each delivered to our test site. Thus, the total cost of the drums per <u>test</u> barrier was $369.

The maintenance costs for this barrier would probably be relatively high. Although no routine maintenance should be required, with the possible exception of checking the cable tension, relatively mild impacts will probably necessitate considerable repair work to restore the barrier's effectiveness. However, much of this work could be accomplished prior to proceeding to the barrier site by prefabricating barrier modules. On-site repair time could be relatively short if prefabricated modules were used.

ClibPDF - www.fastio.com

IV. DESCRIPTION OF TEST BARRIER

Reference 5 contains a discussion of the structural strength of the front of a vehicle in terms of crash survivability. The author concluded that this crush strength can be designed so that a passenger, restrained properly with lap and shoulder belts, can survive collisions at high impact velocities. However, unrestrained or lap-belt restrained passengers will be subjected to secondary collisions in the passenger compartment the severity of which is dependent on their velocity, relative to the vehicle's velocity, at impact. This relative velocity can vary widely depending on the passenger's size and position and the vehicle's fore-structure crushability. Therefore, the author concluded that a refined automobile design would not in itself be a satisfactory aid to passengers using lap belts or no restraint. In other words, a barrier, which can provide a long stopping distance relative to the crush distance provided by the vehicle, is the only effective means of decelerating a vehicle slowly enough to protect passengers that are not fully restrained.

As stated earlier, the records of the California Highway Patrol for the years 1967 and 1968 show that about 25% of all California's freeway fatalities occurred when vehicles ran off the road and collided with fixed objects. Another tabulation of California freeway fixed-object fatal accidents for the years 1965 through 1967 contains a total of 640 for this three year period. Of this number, 548 involved a vehicle traveling at an estimated speed of over 50 mph at impact with 171 of these 548 traveling over 70 mph. A further breakdown of this total of 640 accidents indicates that 376 standard sized cars, 159 compact cars, and 105 other miscellaneous vehicles were involved. These results indicate that energy absorbing barriers must be designed to cushion impacts of standard size cars traveling at high speeds.

In an effort to determine the most prevelent impact angle, forty-seven California Highway Patrol accident reports involving fatalities at gore installations during 1965-1967 were examined and classified (See Table 1, next page). This data was based on the sketches of the accident site included in the CHP officer's reports. In many cases, no barriers were present so the impact angle was estimated assuming an energy absorbing barrier was in place. Also, funds were not available to locate and examine all the police reports involving gores. Thus, the sample was small and the accuracy of the data definitely subject to question. In any event, the study indicated that a number of collisions were side angle impacts (most less than 10°); hence, energy absorbing barriers should be capable of redirecting vehicles impacting at oblique angles in addition to effectively decelerating vehicles impacting headon.

ClibPDF - www.fastio.com

Table No. 1

Analysis of 47 Freeway Fatal

Accidents Involving Gores

Category	1965	1966	1967	Total
Angle of Impact[1,2]				
Headon[3]	6	5	8	19
Flat Angle (≤ 10°)	4	8	6	18
Large Angle (> 10°)	3	4	1	8
Location[1]				
Nose	11	12	12	35
Side	2	6	4	12
Barrier or Object				
Concrete	2	11	5	18
Guardrail	8	6	8	22
Pole[4]	2	1	2	5
Concrete Curb	1	0	1	2

[1]When a pole was impacted, an imaginary barrier was assumed in front of it and the vehicle path was studied to determine the location and angle of a hypothetical barrier impact.

[2]No estimate was made on two accidents.

[3]Includes broadside impacts.

[4]Includes both sign posts and lighting standards.

Note: The 1966 and 1967 accidents all involved one fatality per accident.

ClibPDF - www.fastio.com

Thus, the test barrier was designed to decelerate a 4700 pound vehicle impacting headon or at an angle of 10° with the barrier axis at an impact velocity of 60 mph without subjecting the vehicular passenger compartment to an average deceleration greater than 10 G's. (This choice of a relatively shallow 10° angle has since been justified, at least to some extent, by reports from several other states indicating that in-service energy absorbing barriers are being impacted headon in almost all cases.) The construction details for the barrier are shown on Exhibit 1.

The primary energy absorbing media used for the test barrier were 55 gallon tight-head steel drums. Forty-one of these drums, which were approximately 24" in diameter and weighed 38 pounds each, were used for each barrier. The drums contained 18 gage tops and bottoms and 20 gage sides. The tops and bottoms each contained one 7" diameter hole to decrease the magnitude of the force required to crush the drum (see Figure 1 below). The barrier design procedure used was developed and reported by the Texas Transportation Institute[3]. The design calculations are included as Appendix A of Reference 6.

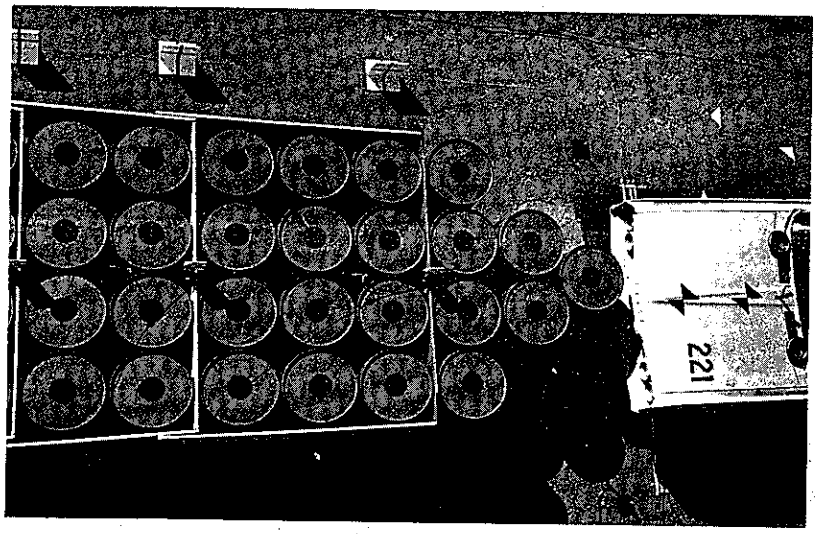

FIGURE 1

In an effort to provide an effective redirective capability, a system consisting of three one-inch thick plywood diaphragms and eight one-inch thick plywood fender panels was utilized for the first test barrier. The diaphragms were intended to provide support for the fender panels and to transmit the lateral component of the impact force to the cable system

ClibPDF - www.fastio.com

when oblique angle impacts occurred. Although not of primary importance, it was felt that the lateral distribution of the impact forces provided by the diaphragms during an offset headon impact would also be of some benefit.

The fender panels, attached to the diaphragms using steel hinges, were intended to act as beams when resisting the lateral component of the impact forces. The trailing edge of each fender panel overlapped the leading edge of the next rearward panel in a "fish scale" manner such that barrier crush would not be restricted during a headon impact. Light springs were used to maintain the fender panels in the "closed" position prior to activation of the barrier by an impacting vehicle.

The test barrier was placed in front of a California Type 8 Bridge Approach Guardrail (BAGR) to simulate a gore installation (Exhibit 2). Two concrete anchor blocks were cast in place in front of the barrier. Four 3/4 inch wire ropes were attached to fabricated steel "T" sections embedded in these concrete anchors (see Figure 2 below). The wire rope was threaded between the drums so that the drums would be free to slide backward during impact and then attached to the BAGR using swaged fittings. A slight pre-impact tensile force was placed on the cables. The cables were aligned in a straight line to minimize the cable slack, and subsequent lateral movement, that develops during an oblique angle impact. Figure 3 below shows the cables sloping up from the front anchor block. The anchor block and sloping cables were located such that the front drums would receive as much lateral support as possible while still keeping the cables low enough to minimize the possibility of snagging the impacting vehicle.

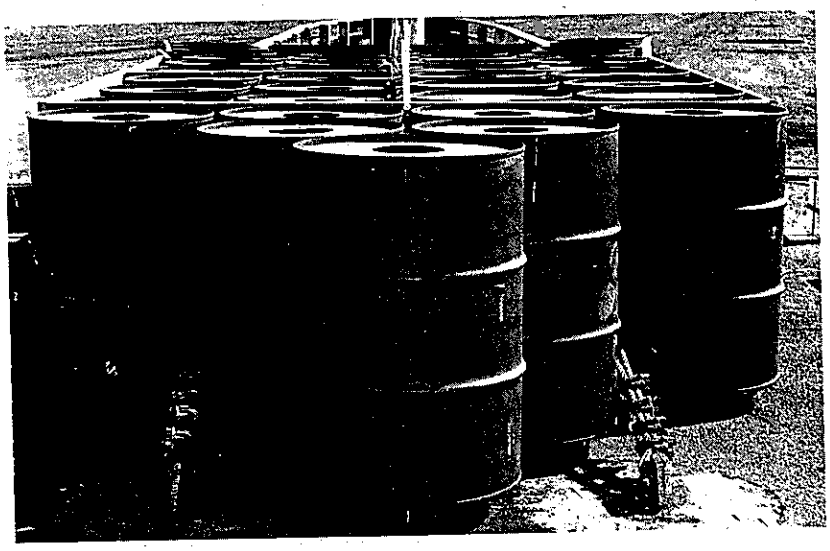

FIGURE 2

FIGURE 3

ClibPDF - www.fastio.com

The barrier was elevated four inches above the ground with one "U" bolt chair bolted to the bottom of each drum. The drums were attached together at all points of contact with 5/8 inch bolts and washers. For Test 221, bolts were placed 2" below the drum tops and 2" above the drum bottoms; wood spacer blocks were used between drums (see Figure 4 below). For Tests 222 and 223, the bolts were located at the two rolling hoops and a steel washer was placed between the drums so that the cable could be threaded between the drums more easily. Since the drums were bolted together, in a relatively rigid assembly, some of the "U" bolt chairs were not in contact with the slightly irregular ground surface at all times.

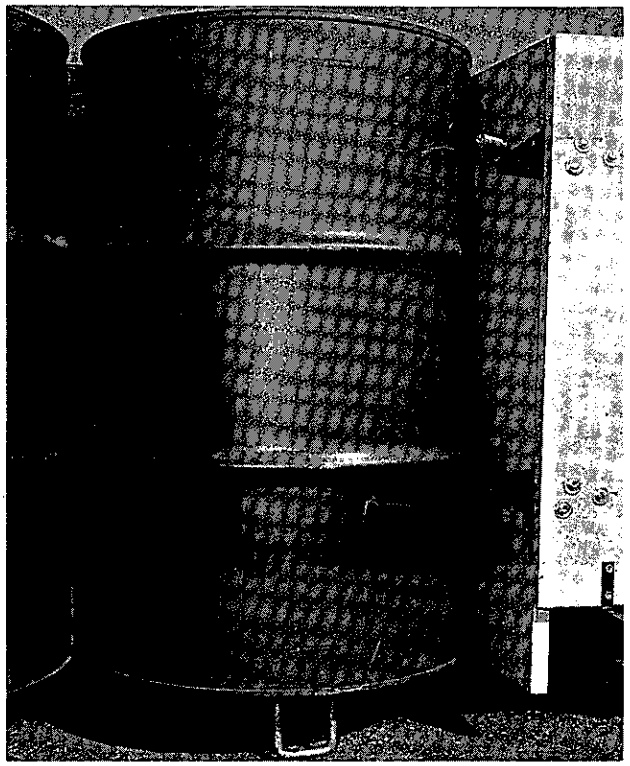

FIGURE 4

Bolts were used in lieu of the welded connections used in the TTI test barriers because, although slightly more expensive initially, it was felt that the bolted connections would simplify and accelerate barrier repairs.

ClibPDF - www.fastio.com

V. DESCRIPTION OF TESTING

Introduction

All of the tests reported herein were conducted on an unused portion of a runway at the Lincoln Municipal Airport, Lincoln, California. The test vehicles used for this series were 1968 Dodge sedans. Two anthropometric dummies were placed in the front seat of the vehicles and restrained with lap belts. The driver, Stan, weighs 165 lbs. and is a 50th percentile male. The passenger, Sam, weighs 210 lbs. and is a 95th percentile male. Targets were placed on the sides and top of the car for use in the analysis of the high speed data film obtained during each test. The vehicle was remotely operated from a control car which followed it in along the appraoch line until just before impact. A trip switch cut off the ignition in the test vehicle 10 feet prior to impact. A more complete description of the control system is given in Reference 7.

Instrumentation

For Tests 221 and 222, a telemetry instrumentation system on loan from the Federal Highway Administration was used[8]. It consisted of seven channels of FM telemetry for use in the crash vehicle and/or dummies and seven hardwire channels for use on the test barrier and back-up bridge approach guardrail. The system included seven accelerometers and two seat belt force transducers and all the necessary signal conditioning equipment. The dynamic data from these transducers was recorded on a 14 channel analog magnetic tape recorder. For Tests 222 (partial) and 223, data from instrumentation on the test vehicle was transmitted through an umbilical cord (hardwire) system. All the accelerometers in the test vehicle and the dummies were of the unbonded strain gage type. Those used with the telemetry system were Statham Model A514TC accelerometers. Those used with the hardwire system were Statham Model A400TC accelerometers. Additional data regarding the vehicular and barrier instrumentation is included on Plates 1 and 2, pages 11 and 12.

Impact-O-Graphs (mechanical stylus devices designed to measure acceleration) were placed in the chest cavity of the dummy located in the passenger position and also on the floor of the test vehicle. Even though the Impact-O-Graphs respond in a velocity mode rather than an acceleration mode if subjected to a frequency above 23 Hz, they were used for comparative evaluations of the severity of the three collisions.

ClibPDF - www.fastio.com

Plate 1

CALIFORNIA DIVISION OF HIGHWAYS

VEHICLE INSTRUMENTATION

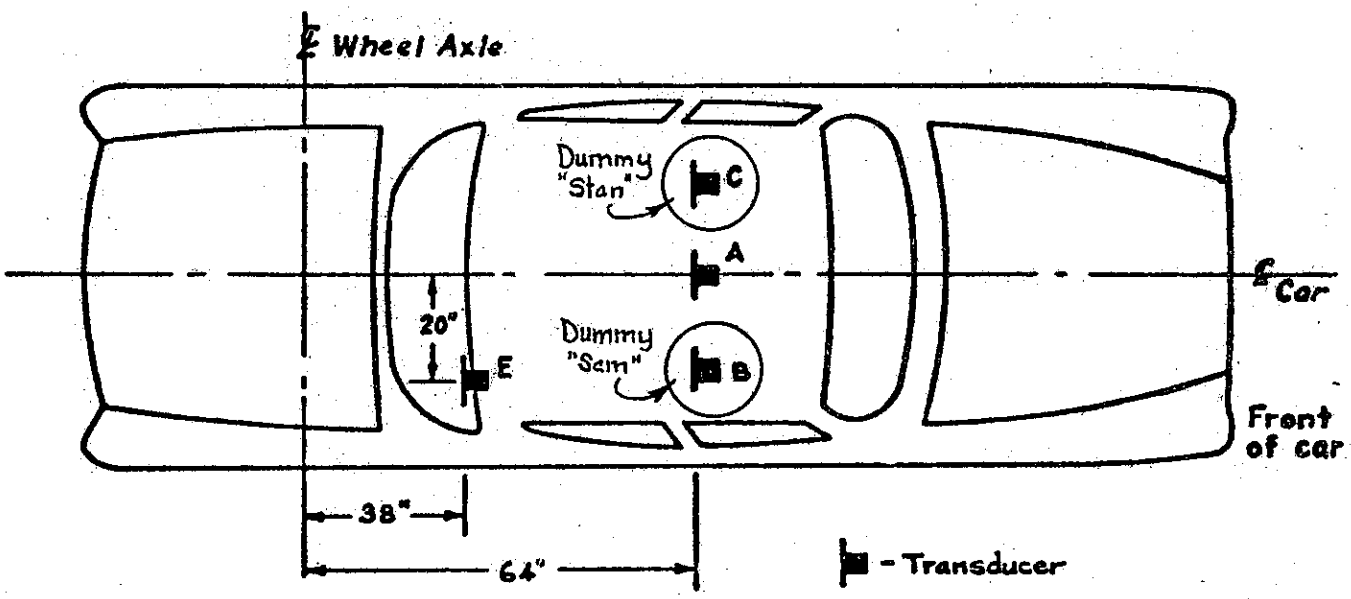

Test #221

CHANNEL NO.	LOCATION[1]	DESCRIPTION[2]
1	A	100 "G" longitudinal accelerometer (T)
2	E	100 "G" longitudinal accelerometer (T)
3	C	50 "G" longitudinal accelerometer (T)
4	C	50 "G" lateral accelerometer (T)
5	C	50 "G" vertical accelerometer (T)
6	C	Force meter in "Stan's" chest (T)
7	C	Lap belt tension transducer, "Stan" (T)

Test #222

1	A	100 "G" longitudinal accelerometer (T)
2	A	50 "G" lateral accelerometer (T)
3	E	100 "G" longitudinal accelerometer (T)
4	E	100 "G" lateral accelerometer (T)
5	C	50 "G" longitudinal accelerometer (T)
6	C	50 "G" lateral accelerometer (T)
7	C	50 "G" vertical accelerometer (T)
A	A	50 "G" lateral accelerometer (U)
B	E	100 "G" longitudinal accelerometer (U)
C	E	50 "G" lateral accelerometer (U)
D	B	50 "G" longitudinal accelerometer (U)

Test #223

1	A	100 "G" longitudinal accelerometer (U)
2	A	50 "G" lateral accelerometer (U)
3	C	50 "G" longitudinal accelerometer (U)
4	C	50 "G" lateral accelerometer (U)
5	E	50 "G" longitudinal accelerometer (U)

Notes:

[1] A and E on vehicle floor; B and C on back of dummy's chest cavity.

[2] (T) = FM telemetry, (U) = umbilical cord.

ClibPDF - www.fastio.com

Plate 2

CAMERA AND INSTRUMENTATION LOCATIONS AT BARRIER

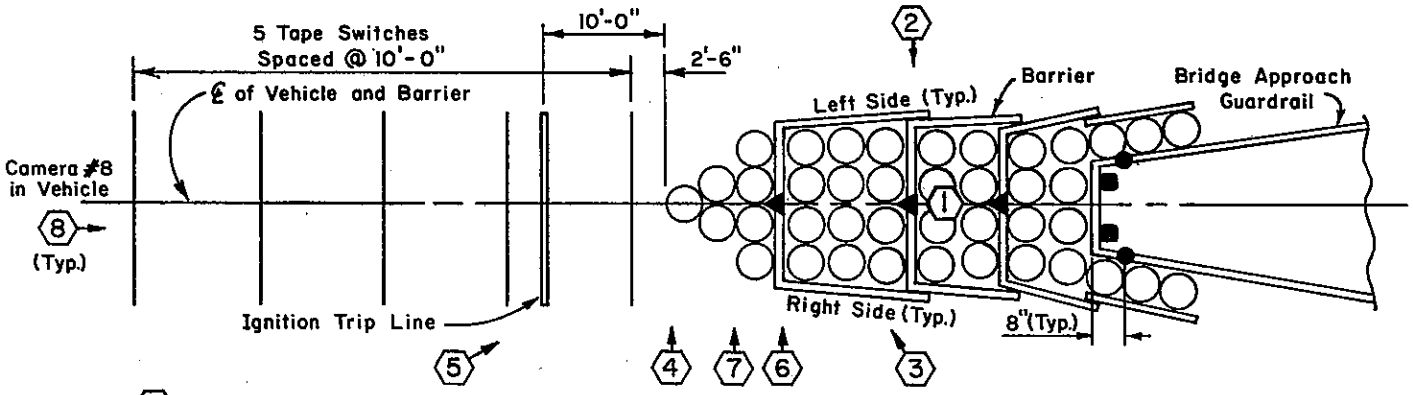

Cameras
- Accelerometer (200 G's) Total 3.
- Load cell (50 Kip min. capacity) Total 4.
- Strain gage (℄ top surface, upper & lower rails, ℄ 8" behind nose of steel barrier) Total 4.

TEST 221

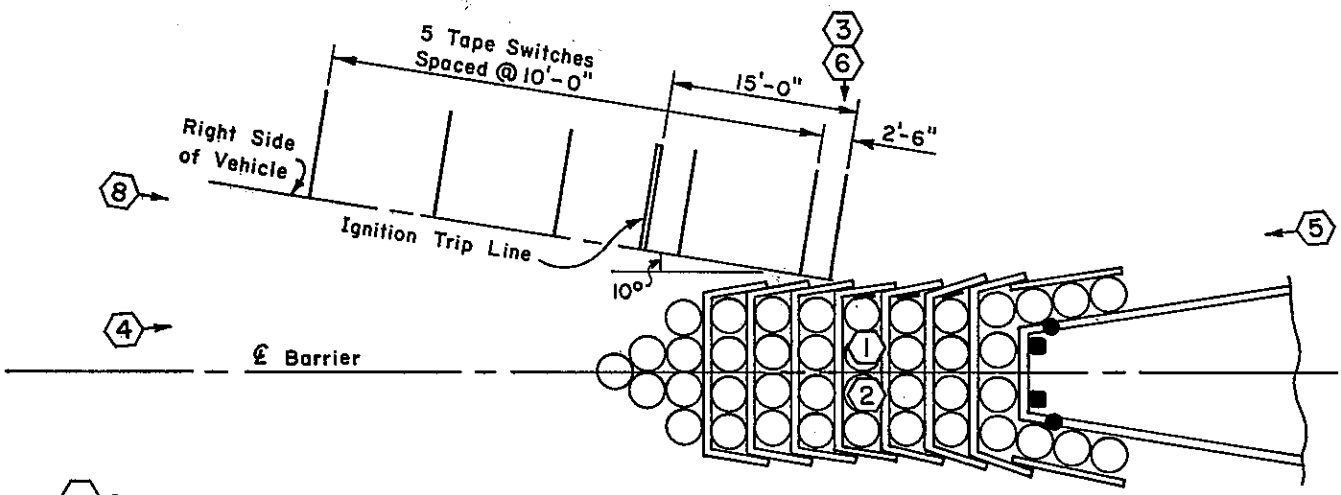

Cameras
- Load cell (50 Kip min. capacity) Total 4.
- Strain gage (℄ top surface, upper & lower rails. ℄ 8" behind nose of steel barrier) Total 4.
- Strain gage on Fender Panel, Total 3.

TEST 222

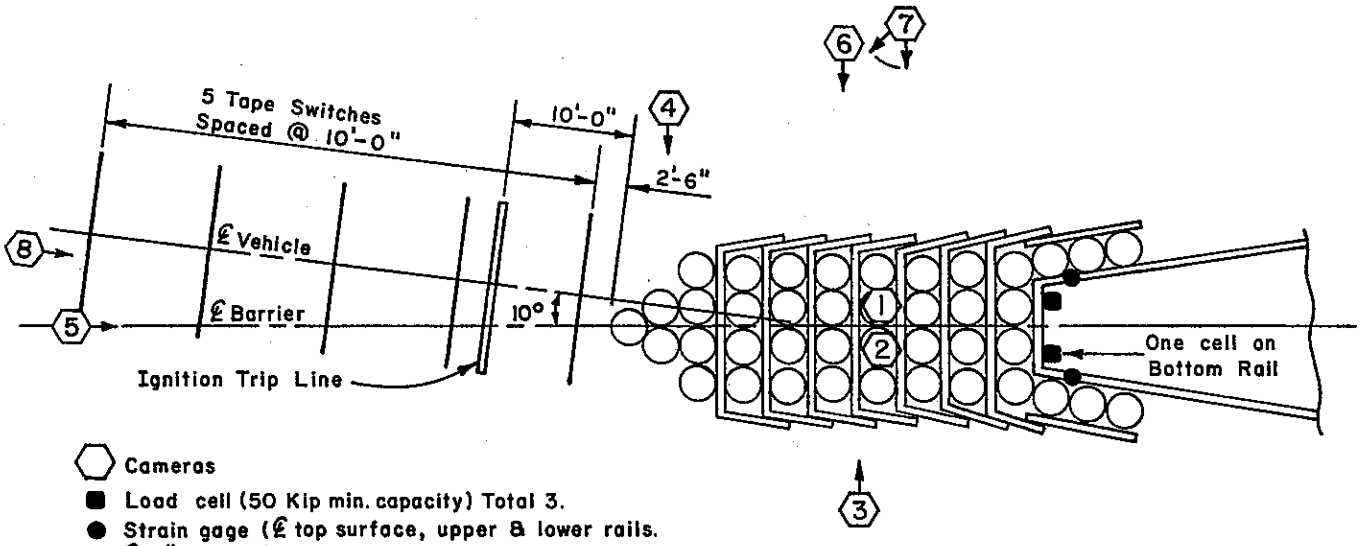

Cameras
- Load cell (50 Kip min. capacity) Total 3.
- Strain gage (℄ top surface, upper & lower rails. ℄ 8" behind nose of steel barrier) Total 4.

TEST 223

ClibPDF - www.fastio.com

Photography

High speed photography was used to study the vehicular, dummy, and barrier kinematics for all three tests. Eight photosonic cameras operating at frame rates of 200-400 frames per second were placed as shown on Plate 2, page 12. Cameras 1 and 2 were mounted overhead. Camera number 8 was placed in the crash car to record the movement of the dummies. Red-orange "pips" were placed on the edge of the film at a rate of 1000±5 per second, using Adtrol timing light generators, to provide a means of determining the frame rate of each camera.

As the test vehicle crossed the tape switches shown on Plate 2, flash bulbs in view of the cameras were triggered. In addition to providing a common time reference for all the cameras, these flashes were used to compute the impact speed of the test vehicle using the distance between the tape switches and the frame rates of the cameras. Additional tape switches were placed adjacent to these tape switches to reference the electronic data to impact and to the photographic data.

The ignition trip line was a taut cord placed approximately nine inches above the ground that tripped a switch mounted on the front bumper of the vehicle, hence shutting off the ignition.

Reference 6 contains a discussion of the data obtained with the photographic, mechanical, and electrical data acquisition systems described above.

ClibPDF - www.fastio.com

VI. TEST RESULTS

Summaries of Each Test

Test 221. A 4690 pound 1968 Dodge sedan impacted the barrier headon at a speed of 64.2 mph. The vehicle axis was offset 6" from the barrier axis at impact. Deceleration was relatively constant. The record of the accelerometers on the floor of the vehicle indicated that the barrier bottomed out to some degree because the peak recorded deceleration occured near the end of the event. The maximum average 50 millisecond (ms) vehicle passenger compartment deceleration, based on accelerometer data, was 10.3 G's. The average deceleration (based on impact velocity and the total passenger compartment stopping distance) was 8.4 G's.

This magnitude of deceleration exceeds the tolerable limits for unrestrained occupants (see Discussion, pages 25 to 29). Thus, unrestrained occupants probably would have sustained moderate to severe injuries. Occupants restrained by lap belts or lap belts and shoulder harnesses would probably have sustained no more than moderate injuries.

There was a noticeable vertical force imparted to the vehicle as shown by the vehicular rise in Figure 5, below. The rise was caused, at least in part, by the right front wheel riding up on the cable. There was virtually no vehicular "rebound".

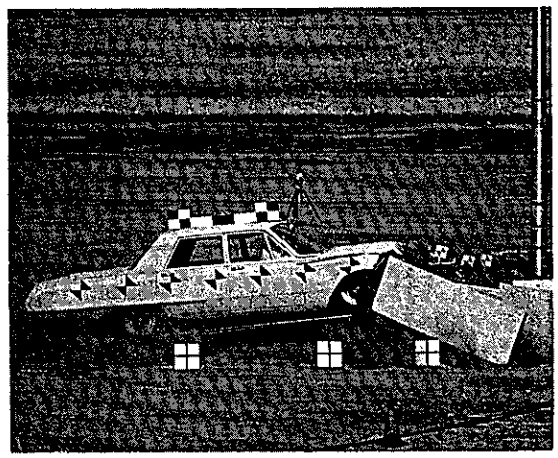

FIGURE 5

Vehicular damage consisted of some bumper deformation, a cracked windshield, a jammed door on the right front side, damage to both front quarter panels, 3.4 inches of steering column collapse

ClibPDF - www.fastio.com

(energy absorbing steering column), and some dashboard deformation (see Figures 6 and 7, below). Maximum vehicular crush was 16.5 inches.

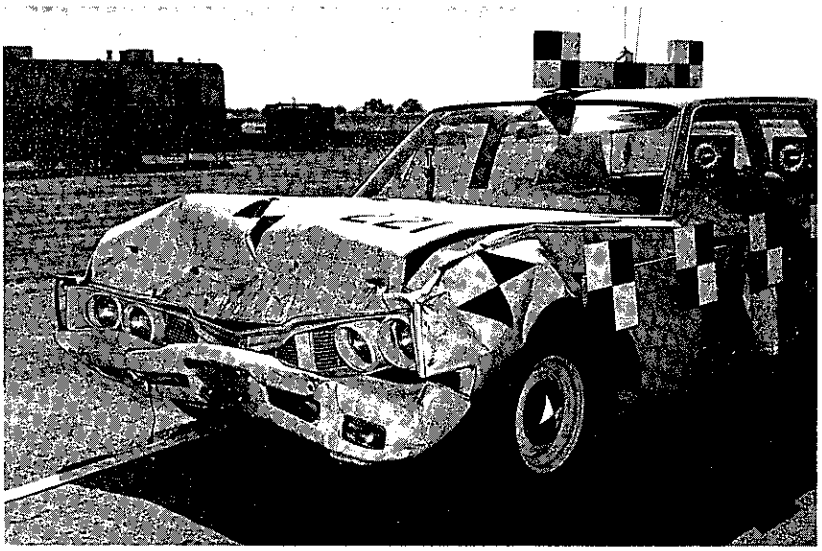

FIGURE 6

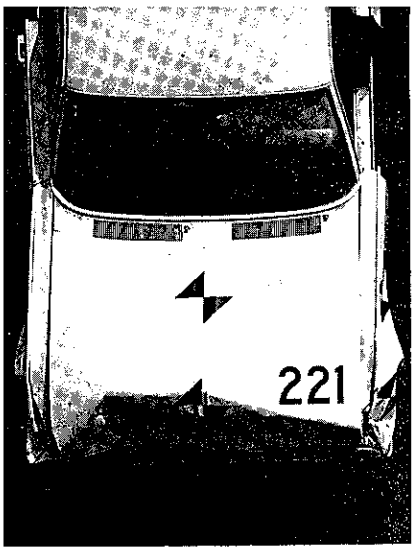

FIGURE 7

All the drums in the barrier were deformed (see Figures 8 and 9). The cables were slack but undamaged. The plywood fender panels were badly cracked and splintered but remained attached to the barrier as it was deformed around the nose of the bridge approach guardrail. The drums crushed one row at a time, in successive order, as had been assumed in the design procedure. See Plate 3 (following page) for additional test data.

ClibPDF - www.fastio.com

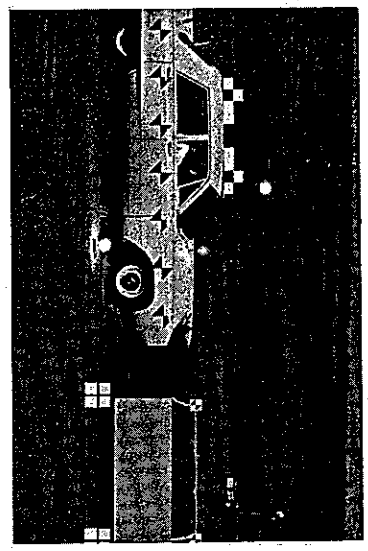

Impact + 0.04 Sec.

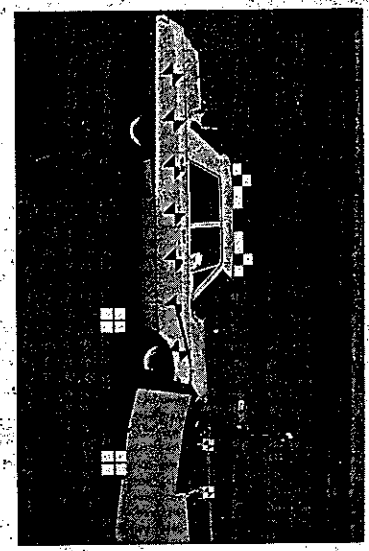

I + 0.13 Sec.

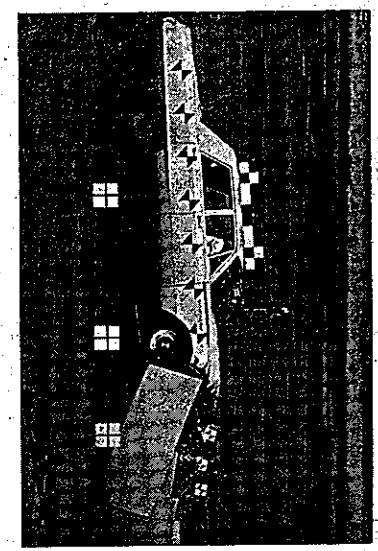

I + 0.50 Sec.

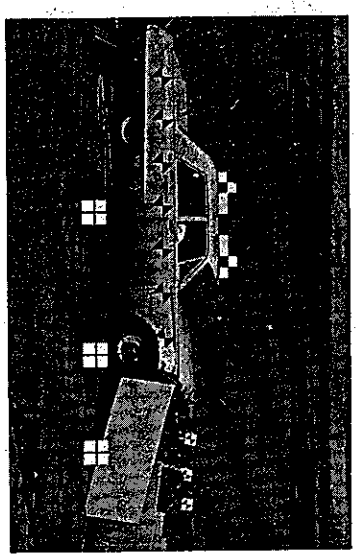

I + 3.10 Sec.

Barrier Depth	19.6 Ft.	Test No.	221
No. of Drums	41	Date	9-11-69
Permanent Displacement of Barrier Nose	10.7 Ft.	Vehicle	1968 Dodge
Deceleration Distance-Passenger Compartment	16.5 Ft.	Vehicle Weight (W/Dummy and Instrumentation)	4690 Lbs.[2]
Maximum Vehicular Deformation	16.5 In.		
Steering Column Collapse[1]	3.4 In.	Impact Velocity	64.2 MPH
Passenger Compartment Deceleration (Highest 50 ms avg.)	10.3 G's	Impact Angle	Head-On
		Dummy Restraint	Lap Belt
Vehicle Average Deceleration-Calculated	8.4 G's		

[1] Energy Absorbing Steering Column - 1500 lb. design axial force required to initiate collapse.

[2] Left front door removed.

ClibPDF - www.fastio.com

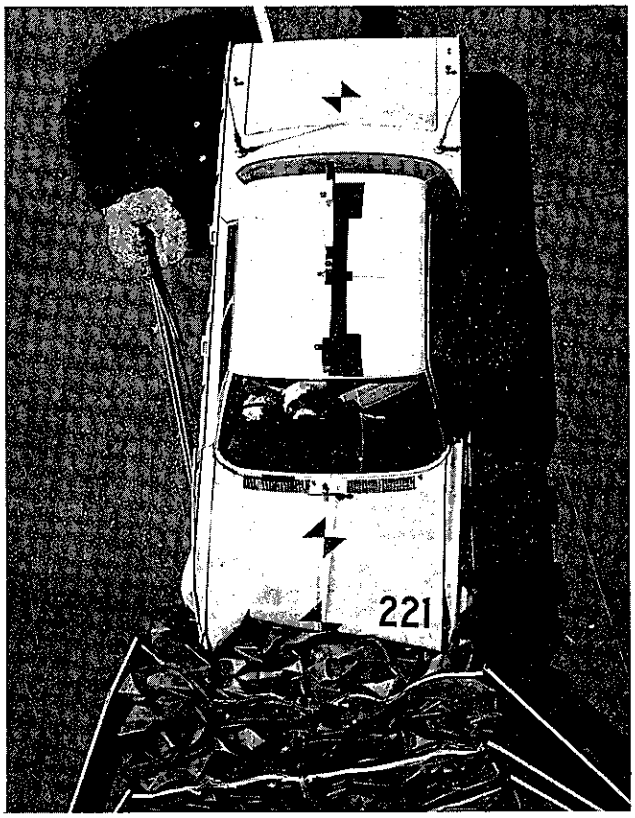

FIGURE 8

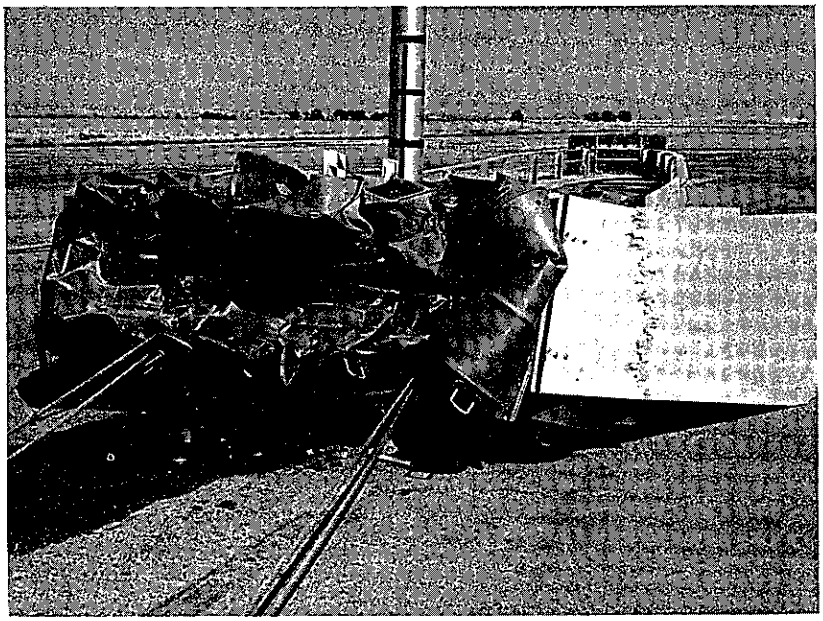

FIGURE 9

ClibPDF - www.fastio.com

Test 222

The barrier used for this test was identical to that used for the first test with the following exceptions: (1) the length of the fender panels was decreased to minimize contact of the bottom corner of the trailing edge of these panels with the ground surface (this required a proportionate increase in the number of diaphragms used) and (2) the drum-to-drum bolted connections were made at the rolling hoops to eliminate the need for wood spacers and make it easier to tighten the lower bolts from the top of the barrier.

The 4760 pound 1968 Dodge sedan impacted the left side of the barrier 10.2 feet in front of the bridge approach guardrail at a speed of 59.8 mph and an angle of 11 degrees with the barrier (see Figure 10, below, for approximate location at impact). The vehicle was redirected but minimal redirectional forces were provided by the drums. The vehicle axis was displaced 12 inches laterally from its location at impact before any redirection began (i.e., crabbing occurred). At this time, solid contact with the bridge approach guardrail had been established.

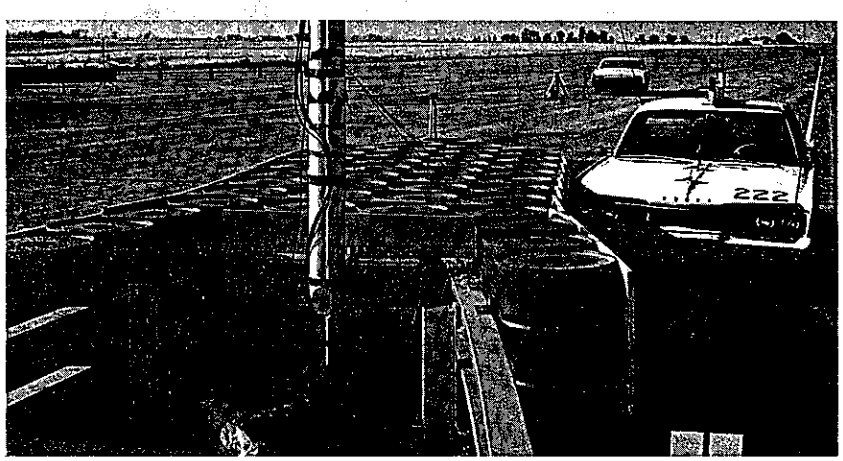

FIGURE 10

The force of the impact caused a clamping action to take place between the rear drums and the bridge approach guardrail, thus preventing drum ejection (see Figure 11).

ClibPDF - www.fastio.com

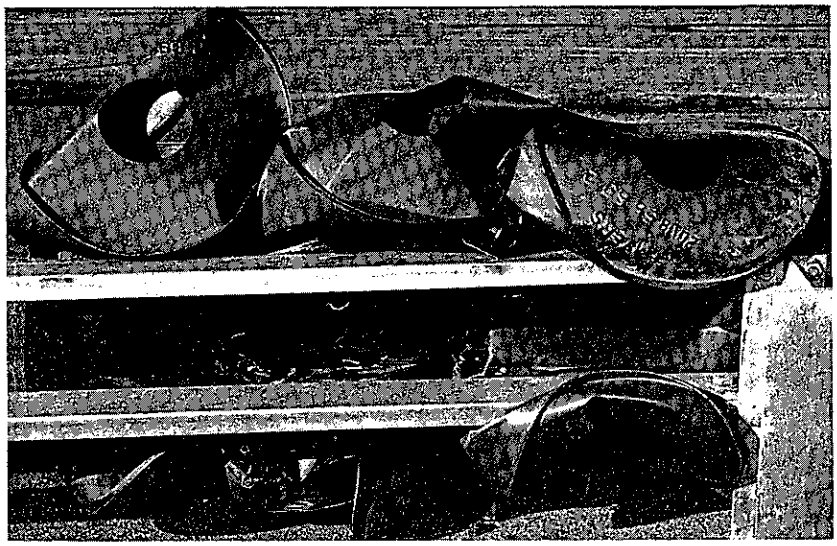

FIGURE 11

Additional barrier damage consisted of crushing of the outside drums in the back half of the barrier on the impacted side. All the fender panels beyond the point of impact were torn off the barrier. There were some failures at hinge pins; the ends of the last few diaphragms were broken off on the impact side. There was an unacceptable amount of debris deposited in what would be the adjacent traveled way. Some of the fender panel fragments were thrown 155± feet from the point of impact (see Figures 12 and 13).

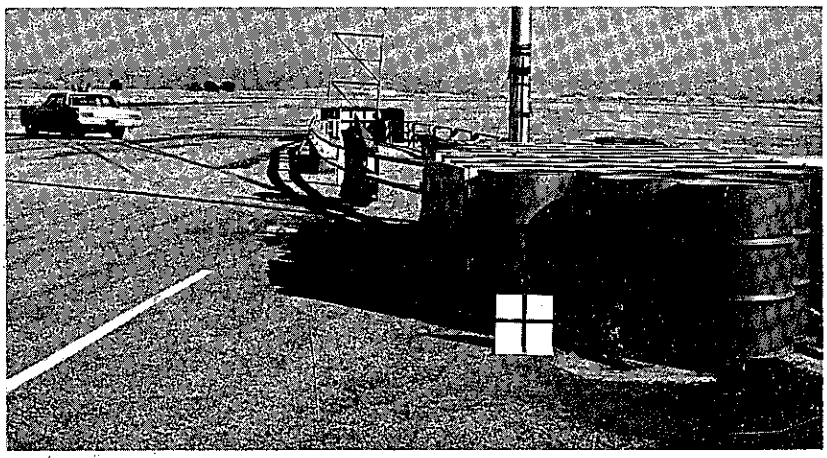

FIGURE 12

ClibPDF - www.fastio.com

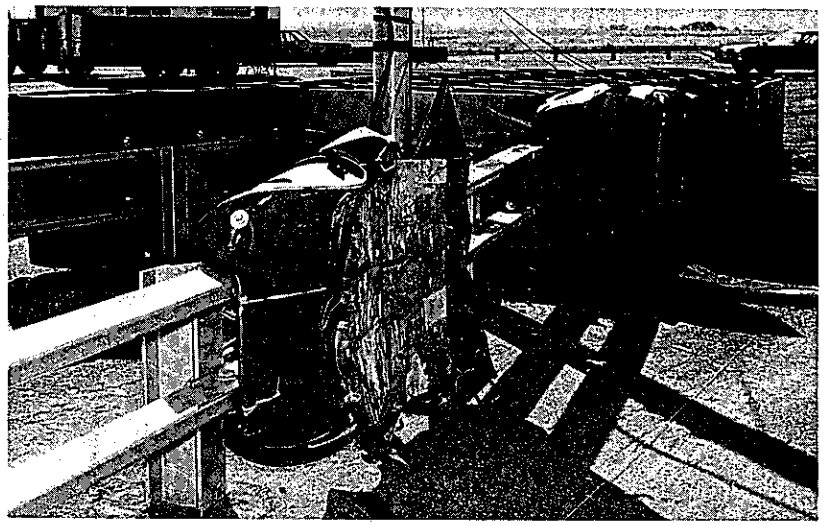

FIGURE 13

The maximum 50 ms average vehicular passenger compartment decelerations recorded were 5.3 G's lateral and 6.6 G's longitudinal. Thus, unrestrained occupants would probably have sustained moderate injuries (see Discussion, pages 25 to 29). Although the lateral deceleration was slightly in excess of the tolerance limits for lap belt restrained occupants, little or no injury would probably occur in most collisions of this severity if any occupant restraints were in use at the time of the collision.

Vehicle damage included severe crushing of the right front quarter panel, jamming of the right front door, scars on the right doors and right rear panel, and displacement of the radiator to the point of touching one fan blade (see Figure 14, below). See Plate 4 (following page) for additional test data.

FIGURE 14

ClibPDF - www.fastio.com

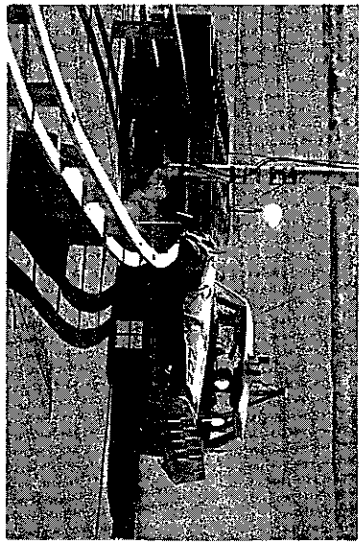

Impact + 0.14 Sec.

I + 0.32 Sec.

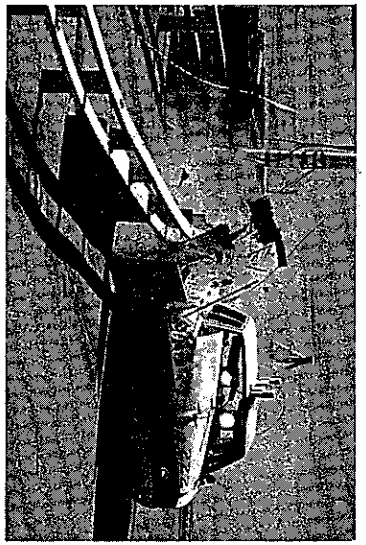

I + 0.50 Sec.

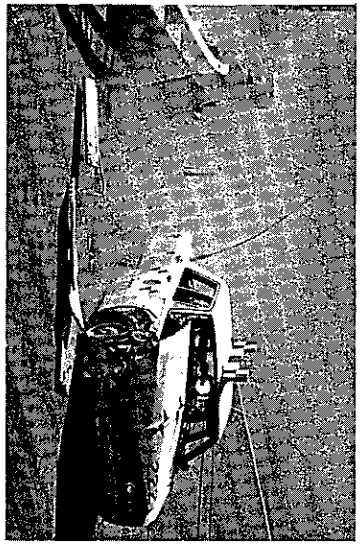

I + 1.05 Sec.

Barrier Depth	19.6 Ft.	Test No.	222
No. of Drums	41	Date	11-21-69
Permanent Displacement of Barrier Nose	None	Vehicle	1968 Dodge
Deceleration Distance-Passenger Compartment	Redirected	Vehicle Weight (W/Dummy and Instrumentation)	4760 Lbs.
Maximum Vehicular Deformation	27 In.		
Steering Column Collapse[1]	None	Impact Velocity	59.8 MPH
Passenger Compartment Deceleration (Highest 50 ms avg.)	6.6 G's Long. 5.3 G's Lat.	Impact Angle	11° (Side)
		Dummy Restraint	Lap Belt
Vehicle Average Deceleration-Calculated	-		

[1] Energy Absorbing Steering Column - 1500 lb. design axial force required to initiate collapse.

ClibPDF - www.fastio.com

Test 223. This test consisted of a 4740 pound 1968 Dodge sedan impacting the same barrier design used for the previous test. The vehicle impacted the left corner of the barrier nose at a speed of 53.6 mph and an angle of 9 degrees. At impact, the center of the front of the vehicle was offset 3.5 feet from the barrier axis. Significant elastic lateral deflection of the barrier took place as the vehicle penetrated 13.2 feet, rotated clockwise, and then rebounded 2.5 feet. The maximum 50 ms average vehicular passenger compartment deceleration, based on accelerometer data, was 10.9 G's (in the longitudinal direction). The average passenger compartment longitudinal deceleration was 7.2 G's. (The vehicular rotation was neglected because the longitudinal velocity was approximately zero before rotation began.) Deceleration of this magnitude would probably result in moderate to severe injury for an unrestrained occupant, minor to moderate injury for an occupant restrained by a lap belt, and little or no injury for an occupant using both a lap belt and a diagonal shoulder harness. The position of the vehicle after the collision was such that it would have been a hazard to adjacent traffic (see Figure 15, below).

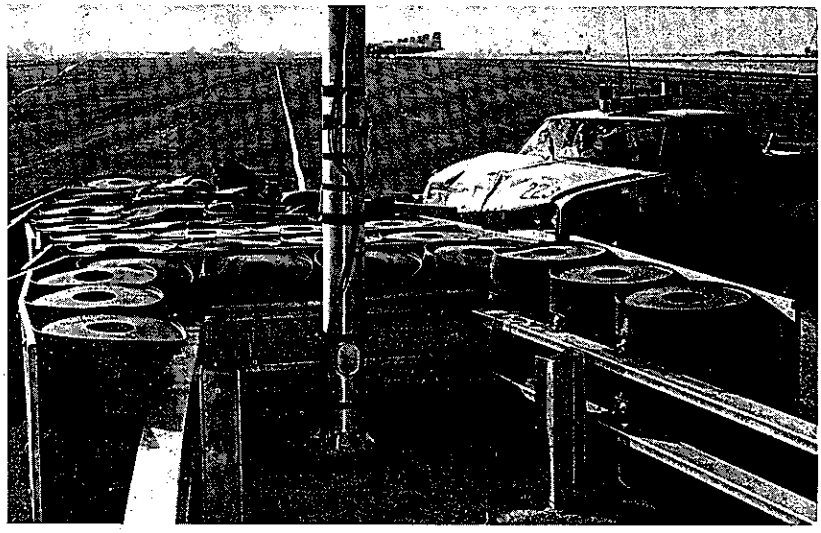

FIGURE 15

Vehicle damage consisted of a crimp in the roof on the passenger side, extensive hood deformation, slight displacement of the left front quarter panel, and 3.6 inches of (energy absorbing) steering column collapse (see Figures 16 and 17). There was a slash high on the cheek of the dummy driver and the windshield was broken in front of the dummy passenger. The dummy passenger was badly cut on the tip of the bridge of his nose, over his right eye and on his forehead, and on the right side of his face and cheek. This dummy's lower legs were removed before the crash; this may have contributed to some excessive movement of his upper body during the collision.

ClibPDF - www.fastio.com

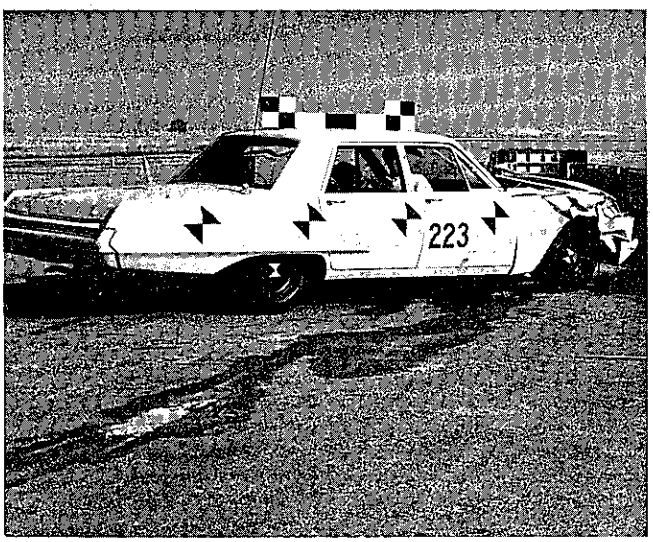

FIGURE 16

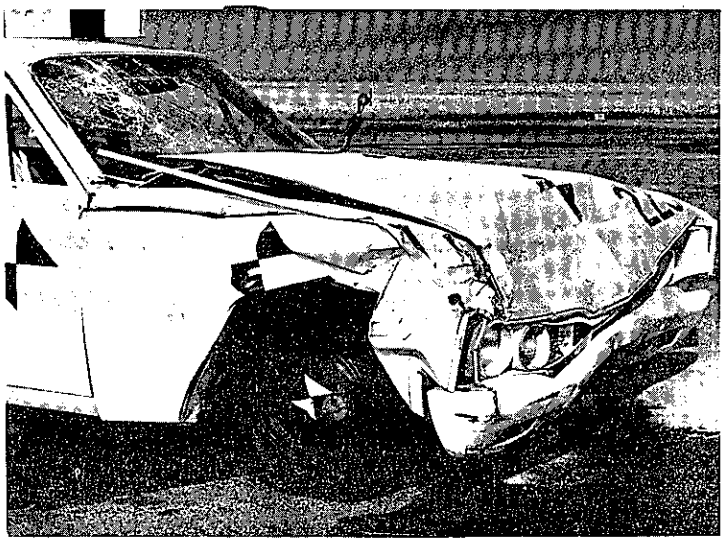

FIGURE 17

All but two drums were damaged. The left front and the right rear plywood fender panels were the only ones damaged. It appeared that the impact force was transmitted somewhat diagonally from the left front to the right rear of the barrier (see Figure 18, below). The left front portion of the barrier was crushed much more than the right front side. The film record shows the drums crushing one row at a time in successive order with the exception of the back row, which was deformed soon after impact. This was very similar to the dynamic barrier compression sequence observed during Test 221 and again verified the design assumptions. From a maintenance standpoint, all the drums would have required replacement.

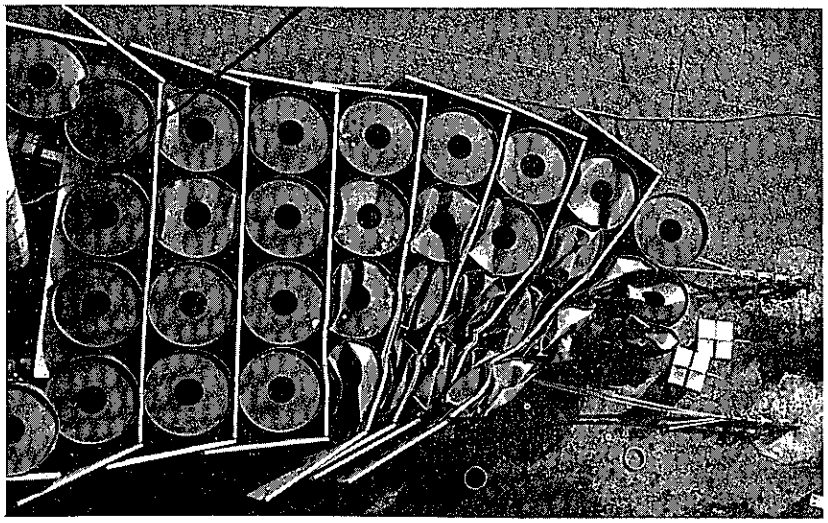

FIGURE 18

ClibPDF - www.fastio.com

The movies showed the car being ejected outward from the barrier due to the elastic energy stored within the barrier. The clockwise rotation of the car was probably caused by a moment couple consisting of the vehicular momentum, acting through the vehicle CG, and this "elastic" energy, acting through the centroid of the vehicle-barrier contact interface. See Plate 5 (following page) for additional test data.

ClibPDF - www.fastio.com

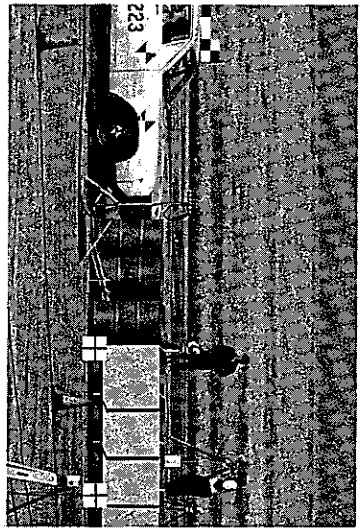

Impact

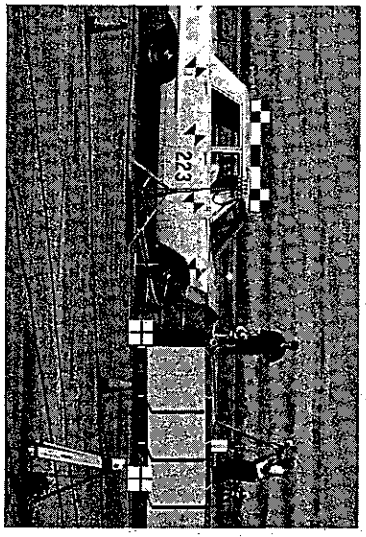

I + 0.09 Sec.

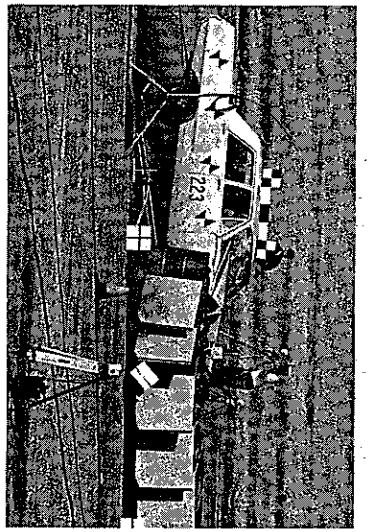

I + 0.46 Sec.

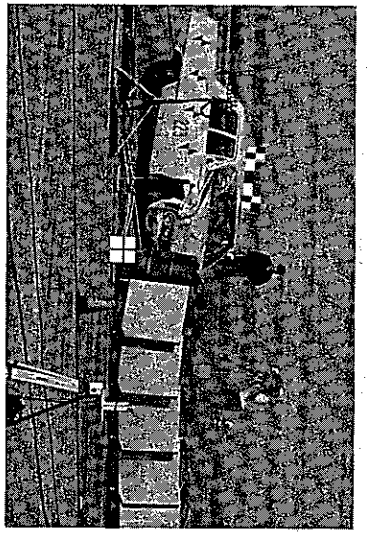

I + 1.69 Sec.

Barrier Depth	19.6 Ft.
No. of Drums	41
Permanent Displacement of Barrier Nose	5.5 Ft.
Deceleration Distance-Passenger Compartment	13.2 Ft.
Maximum Vehicular Deformation	14.5 In.
Steering Column Collapse[1]	3.6 In.
Passenger Compartment Deceleration (Highest 50 ms avg.)	10.9 G's Long.
Vehicle Average Deceleration-Calculated	7.2 G's[2]

Test No.	223
Date	12-5-69
Vehicle	1968 Dodge
Vehicle Weight (W/Dummy and Instrumentation)	4740 Lbs.[3]
Impact Velocity	53.6 MPH
Impact Angle	9° (Nose)
Dummy Restraint	Lap Belt

[1] Energy Absorbing Steering Column - 1500 lb. design axial force required to initiate collapse.

[2] Lateral components of deceleration not included.

[3] Lower legs removed from dummy placed in passenger location to facilitate handling of dummy.

ClibPDF - www.fastio.com

Discussion

In addition to studying accident records, it is necessary to investigate the various aspects of human and vehicle tolerance to deceleration before an energy absorbing barrier can be designed effectively. Numerous research studies have been conducted on this subject; some of the more pertinent findings will be outlined below.

It is useful to determine some general upper limits of deceleration tolerance. If a vehicle occupant is restrained with a lap belt and shoulder harness, then his body will decelerate at about the same rate as the car. Longitudinal decelerations as high as 40 G's have been tolerated by fully restrained healthy young male volunteers for up to 100 milliseconds with no ill effects[9] (see Plate 6, following page). Acceleration above this level caused extreme chest pain, difficulty in breathing, and visual malfunctions such as blurred vision, pain, headache, and retinal hemorrhage.

The deceleration of a 160 lbs. driver in a headon rigid barrier crash at 22 mph is about 25 G's[10]. The same reference reported that few serious injuries occurred in vehicle collisions at 20 mph. This would indicate that a tolerable occupant longitudinal deceleration of 25 G's would be appropriate. This does not appear to be compatible with the 12 G maximum deceleration permitted for devices classified as satisfactory when evaluated under the 4S program of the Federal Highway Administration. However, these 4S criteria are intended to provide a survivable environment and, as such, apply to the vehicular deceleration. The 12 G average deceleration limit corresponds to a 10 ft. stopping distance for a 60 mph impact. These criteria were based on tentative tolerable limits of deceleration proposed by the Cornell Aeronautical Laboratory in 1961[11]. These Cornell limits, shown in Table 2 below, are for a duration of impact less than 200 milliseconds and a rate of onset less than 500 G's per second.

TABLE NO. 2

Occupant Restraint	Maximum Deceleration (G's)		
	Lateral	Longitudinal	Total
Unrestrained	3	5	6
Lap Belt	5	10	12
Lap Belt & Shoulder Harness	15	25	25

ClibPDF - www.fastio.com

Plate 6

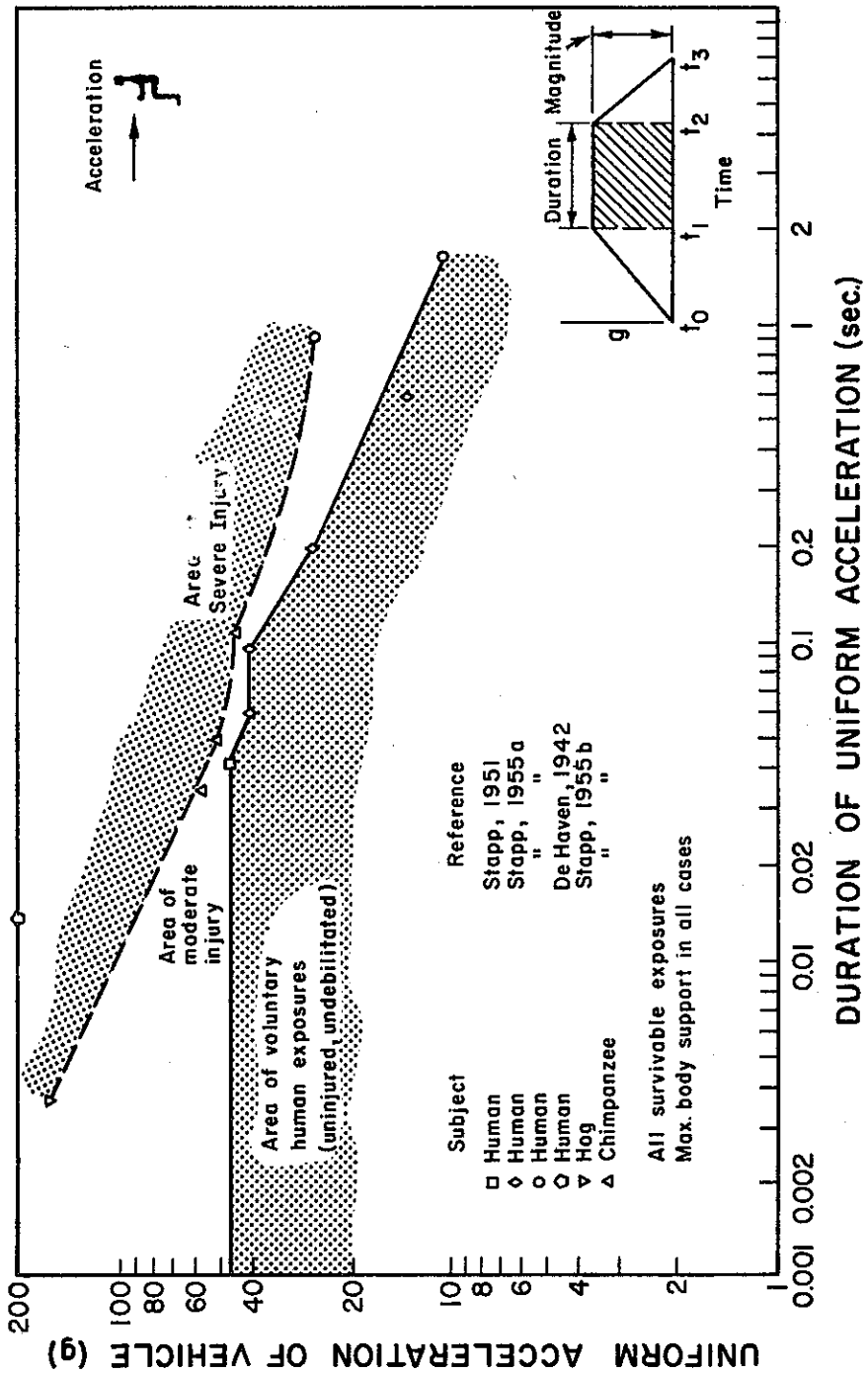

ClibPDF - www.fastio.com

The above table, although helpful as a rough guide for vehicle decelerations, does not define completely the shape of the deceleration pulse, which can vary considerably and still satisfy the 12 G average limitation.

A small study has been completed in which average longitudinal vehicular deceleration was related to the proportion of those vehicles in which unrestrained occupants sustained injuries[12]. This study indicated that a 12 G vehicular deceleration will result in occupant injuries in the majority of cases. When this study is tied to one regarding general use of seat belts[13] one can conclude that, even with energy absorbing barriers designed for maximum vehicle decelerations of 12 G's (60 mph impact velocity), the 65-70% of the public who disdain the use of seat belts will probably be injured in a major collision with these barriers.[15] The results of these studies involving actual automobile accidents indicate that the 12 "G" limit is anything but conservative. Consequently, for the purposes of this study, the deceleration limits established by Cornell (Table 2 above) were applied to the maximum average vehicle passenger compartment deceleration measured over a 50 millisecond (ms) period. It is acknowledged that higher decelerations could be safely tolerated for shorter time intervals.

An even more complex problem regarding deceleration tolerance is that of measuring and evaluating the impacts of occupants with the interior of the vehicle. Any given vehicle deceleration can result in a wide range of body decelerations depending on which body part is being investigated, whether seat belts are worn, whether a steering wheel, windshield or dashboard are impacted, and what the energy absorbing properties of each of these items is. Even when the actual values of deceleration are known, there is still very little information about the tolerance levels of different parts of the body, especially when consideration is given to differences in size, age, physical condition and so on.

An injury study by UCLA indicated that impact into the steering wheel and column is the most common and also most dangerous cause of injuries during non-fatal accidents. Therefore, it would be well to adjust the design of the energy absorbing barrier with due consideration given to the energy absorbing properties of steering columns in current vehicle models. A paper from a GM Seminar[5] includes information on energy absorption in steering columns. This type of column was first installed in 1967 in cars made by General Motors, American Motors, and Chrysler. This column was designed to collapse a maximum of 8-1/4" under loads no greater than 1,000 to 1,500 lbs. (The Federal Motor Vehicle Safety Standards limit the impact force of a simulated body traveling at a relative

ClibPDF - www.fastio.com

velocity of 15 mph to 2,500 lbs. when impacting the steering control system[14]). Accident statistics from 257 cases involving the steering column in 1967 model cars traveling at speeds of 10-125 mph show that the column collapsed more than 5 inches in only 6 cases. A more detailed study of 88 headon accidents out of the total of 257 cases revealed two fatalities. This study also indicated that, at 60 mph, the maximum column compression for all 88 cases was slightly less than 8 inches and the average compression was about 3-1/2 inches. There were numerous cases of steering column compression with closure speeds of 50-60 mph which resulted in no injury to the chest.

The main conclusions that can be drawn from this limited review of the effect of energy absorbing steering columns is that recent improvements to the steering column are probably reducing fatalities and serious injuries. The severity of those chest injuries being sustained will decrease even more if the vehicular passenger compartment longitudinal deceleration is decreased. (This conclusion is based on the assumption that no occupant ejection occurs.) The steering column collapse of 3.4 inches for Test #221 and 3.6 inches for Test #223 indicates that there would be a good possibility of little or no chest injuries being sustained during 60 mph headon or nearly headon collisions with the drum type energy attenuator. This correlates well with the predicted severity based on passenger compartment decelerations.

The Federal Motor Vehicle Safety Standards[14] now require lap belts in all permanent passenger positions and shoulder belts in the outboard, front seat positions. Lap belt anchorages must resist a 5000 lb. load applied in a dynamic test with a body block, and shoulder-lap anchorage combinations must resist a 3000 lb. load applied to the pelvic body block together with a 3000 lb. load on the upper torso body trunk. When the lap belt is securely fastened below the top of the pelvic structure, it can withstand a load of 5000 lbs.[13] It has been reported that occupants of vehicles impacting a rigid barrier at 30 mph can impart a 5000-6000 lb. load onseat belt systems[13]. The tests reported in this reference gave total harness loads of 4000-5000 lbs. for 30 mph impacts and lap-shoulder restraint systems. The peak vehicle decelerations were over 30 G's. In these tests, "submarining" occurred, a phenomenon mentioned in other references. (Submarining is the sliding under the lap-belt by a passenger during impact.) This tendency is increased with a lap-shoulder combination system. If the lap belt slips above the pelvic structure, then the passenger is much more vulnerable to abdominal injuries or possible spinal injuries. The strength of the chest and encased organs is less well defined; none of the references studied mentioned a maximum safe load that could be applied by a shoulder strap during impacts. Other variables

ClibPDF - www.fastio.com

mentioned by various references were the location of harness anchorages which can affect the chance of neck, shoulder, chest, abdominal injuries, etc., and the amount of slack in the harness system due to belt stretch, belt tightness, anchorage slip and so on.

A small but detailed accident study has been conducted at Cornell University to determine the benefits of lap belts other than to prevent ejection[13]. The study showed no significant reduction in the severity of injuries due to the wearing of lap belts. They did determine that the type of injury varied; viz, whereas unbelted occupants impacted the windshield, belted occupants jacknifed toward and hit the steering wheel or instrument panel and received head injuries in a slightly different manner.

The above data suggests that loads from seat belt transducers, if under 5000 lb. for the total loop load, would indicate no injury to passengers due to the belts assuming the belts were properly secured and that no contact with the dashboard occurred. On the other hand, deceleration of the vehicle by the protective barrier may need to be almost as low for lap belted passengers as for unrestrained passengers in order to minimize head injuries during a collision in which ejection would be quite unlikely even if no restraint was used. The lap belt maximum force measured during Test #221 (only test so instrumented) was 525 lbs. This low magnitude indicated that the measurement may well have been erroneous so the collision severity conclusions were not based on it.

Implementation

As a result of the tests reported herein, an experimental energy attenuator incorporating empty 55 gallon drums is now planned for a gore at a freeway intersection in the Los Angeles area. The installation of a remotely triggered camera to document any impacts into this barrier is also being considered.

ClibPDF - www.fastio.com

VII. REFERENCES

1. Nordlin, E. F., Ames, W. H., Hackett, R. P., and Folsom, J. J., "Dynamic Tests of Type 9 Bridge Barrier Rail and Type 8 Bridge Approach Guardrail", Series XVII, California Division of Highways, June, 1969.

2. Michie, J. D., Calcote, L. R., and Bronstad, M. E., "Guardrail Performance and Design", NCHRP Final Report, Project No. 15-1(2), Southwest Research Institute, January, 1970.

3. Hirsch, T. J., and Ivey, D. L., "Vehicle Impact Attenuation by Modular Crash Cushion", Research Report 146-1, Texas Transportation Institute of Texas A & M University, June, 1969.

4. Nordlin, E. F., Woodstrom, J. W., and Doty, R. N., "Dynamic Tests of an Energy Absorbing Barrier Employing Water-Filled Cells", Series XXI, California Division of Highways, November, 1970.

5. "Proceedings, General Motors Corporation Automotive Safety Seminar", General Motors Safety Research and Development Laboratory, July 11-17, 1968.

6. Nordlin, E. F., Woodstrom, J. H., and Doty, R. N., "Dynamic Tests of an Energy Absorbing Barrier Employing Steel Drums", Series XXI, California Division of Highways, October 1970.

7. Nordlin, E. F., Ames, W. H., and Hackett, R. P., "Dynamic Tests of the California Type 20 Bridge Barrier Rail", Series XXIII, California Division of Highways, September, 1970.

8. Nordlin, E. F., Ames, W. H., Kubel, L. G., and Chow, W., "Evaluation of a Telementry System for use in Vehicle-Barrier Impact Tests", California Division of Highways, July, 1969.

9. Damon, A., Stoudt, H. W., and MacFarland, R. A., "The Human Body in Equipment Design", Harvard University Press, 1966.

10. Vanderstempel, T. M., "A Device to Lessen Injuries in Fixed Object Collisions", Traffic Engineering, November, 1966.

11. "Highway Barrier Analysis and Test Program", Summary Report for period July, 1960 - July, 1961, Cornell Aeronautical Laboratory Report No. VJ-1472-V-3, July, 1969.

ClibPDF - www.fastio.com

12. Olson, R. M., Post, E. R., and MacFarland, W. F., "Tentative Service Requirements for Bridge Rail Systems", NCHRP Report 12-8, February, 1969.

13. "The Seventh Stapp Car Crash Conference Proceedings", Derwyn M. Severy, editor, Charles S. Thomas, publisher.

14. "Federal Motor Vehicle Safety Standards", National Safety Bureau, U. S. Department of Transportation, with amendments and interpretations through August 6, 1968.

15. Tamanini, F. J. and Viner, J. G., "Structural Systems in Support of Highway Safety", Office of Research and Development of the Bureau of Public Roads (now Federal Highway Administration); paper presented at the ASCE National Meeting on Transportation Engineering, Washington, D. C., July 21-25, 1969.

ClibPDF - www.fastio.com

ClibPDF - www.fastio.com

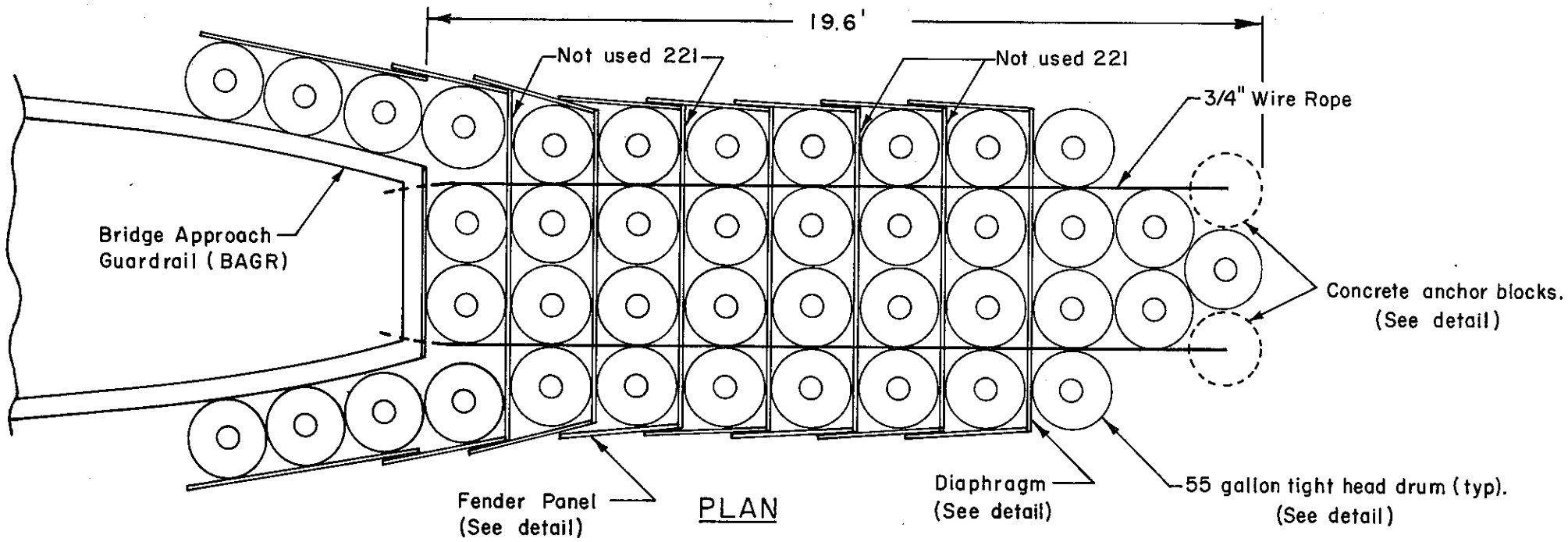

PLAN

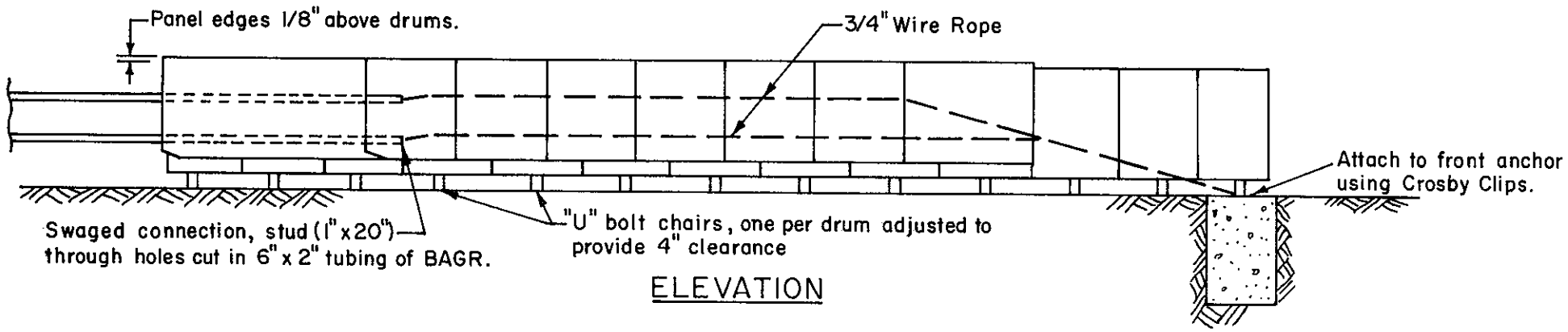

ELEVATION

TEST BARRIER

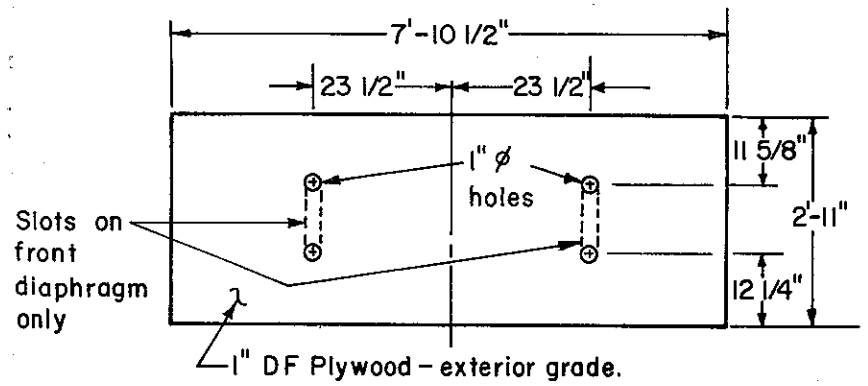

DIAPHRAGMS

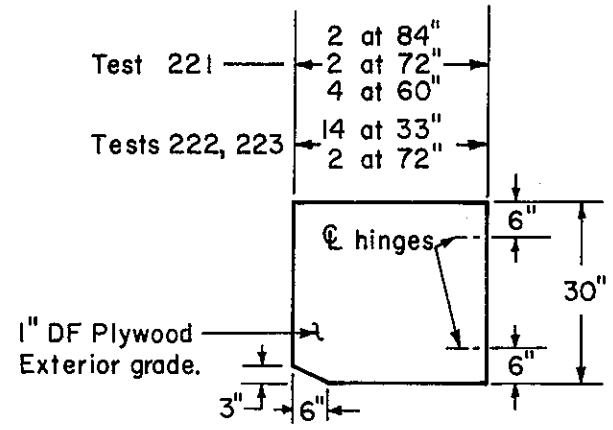

FENDER PANELS

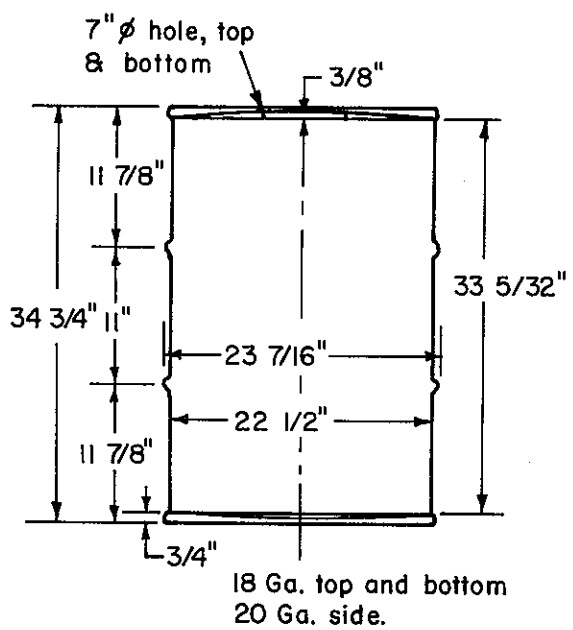

55 GALLON TIGHT HEAD DRUM

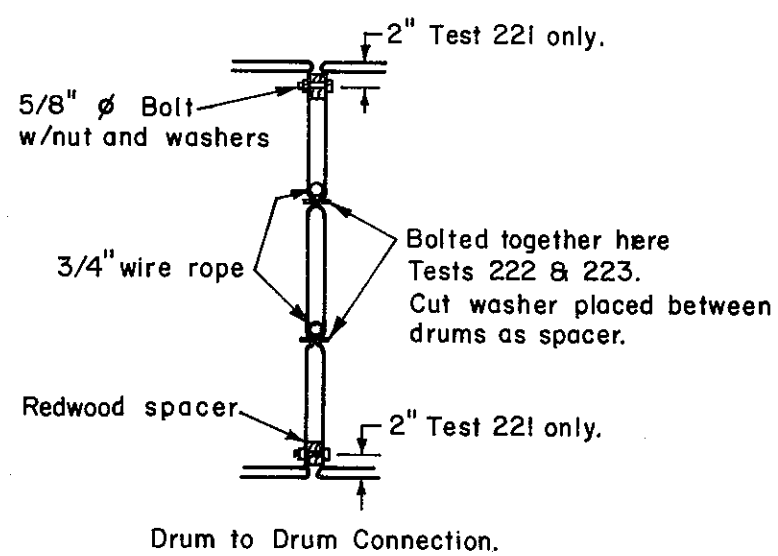

Drum to Drum Connection.

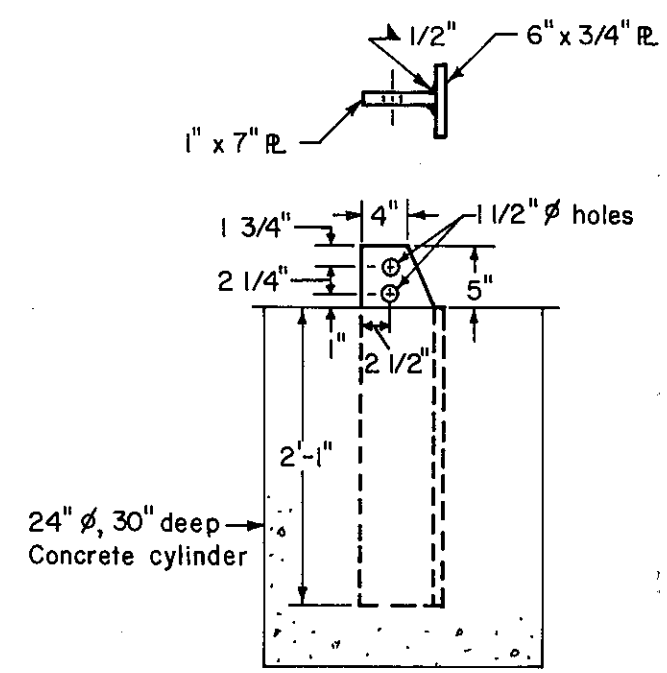

NOSE CABLE ANCHOR

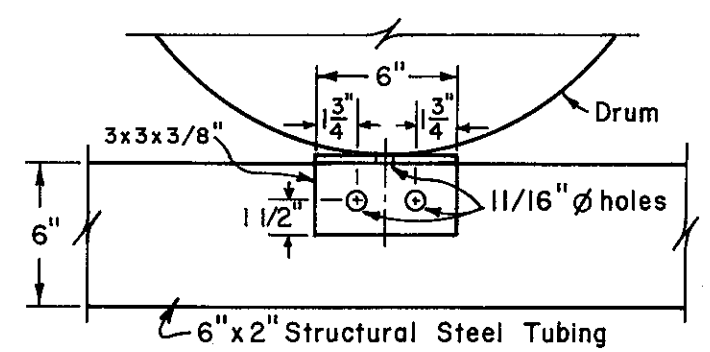

Attachment of rear drums to BAGR.

ENERGY ABSORBING BARRIER DETAILS

EXHIBIT 1

ClibPDF - www.fastio.com

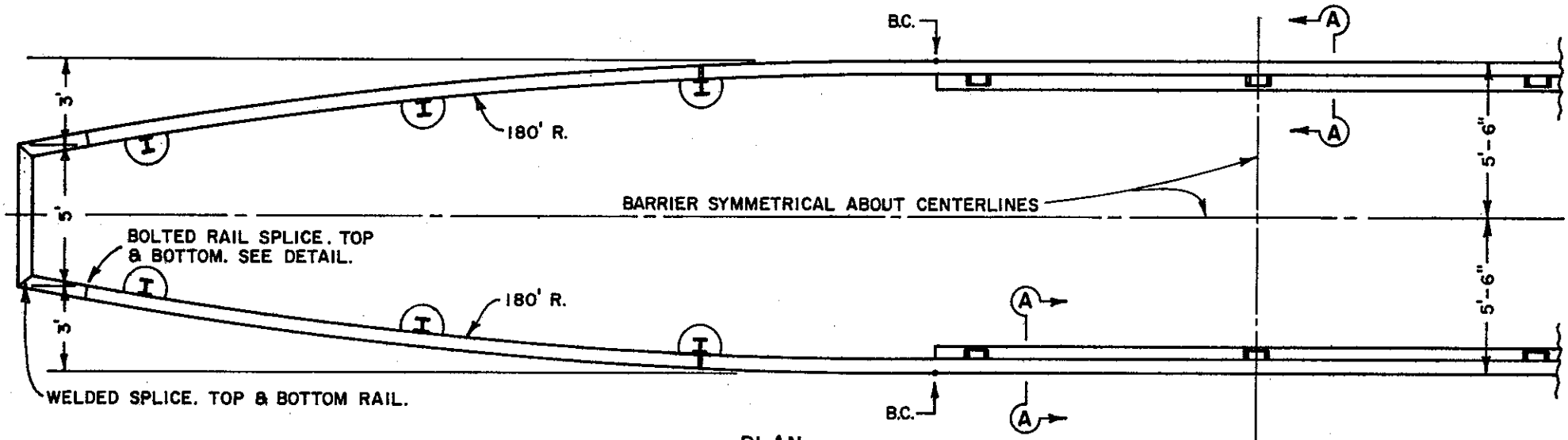

PLAN

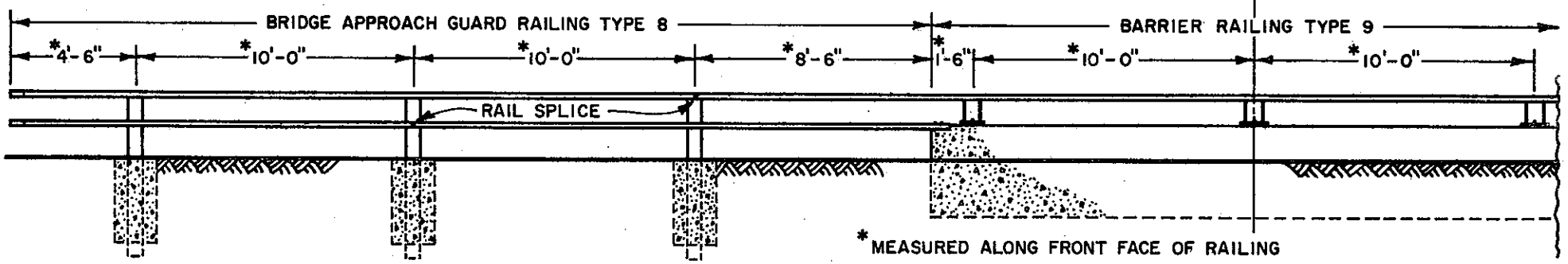

ELEVATION

SCALE: 3/16" = 1'-0"

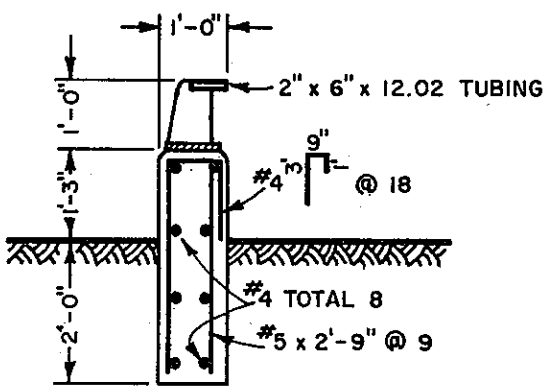

SECTION A-A

3/8" = 1'-0"

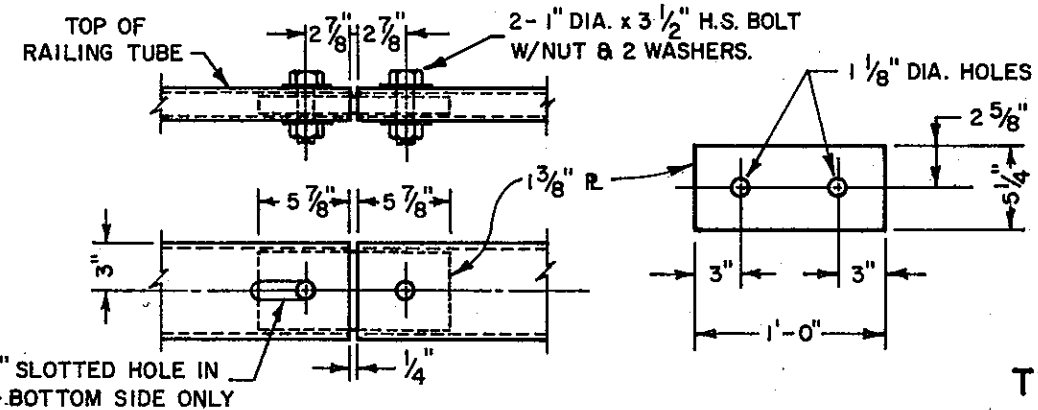

TUBE-BOLTED SPLICE DETAILS

1" = 1'-1"

TYPICAL GORE – ENERGY ABSORBER TESTS

Exhibit 2

ClibPDF - www.fastio.com

ClibPDF - www.fastio.com

ClibPDF - www.fastio.com

ClibPDF - www.fastio.com