HIGHWAY RESEARCH REPORT

FIELD PERFORMANCE EVALUATION OF SOIL PRESSURE CELLS

71-13

STATE OF CALIFORNIA

BUSINESS AND TRANSPORTATION AGENCY

DEPARTMENT OF PUBLIC WORKS

DIVISION OF HIGHWAYS

MATERIALS AND RESEARCH DEPARTMEN

RESEARCH REPORT

NO. M & R 632954-1

Prepared in Cooperation with the U.S. Department of Transportation, Federal Highway Administration May, 1971

ClibPDF - www.fastio.com

ClibPDF - www.fastio.com

STATE OF CALIFORNIA—TRANSPORTATION AGENCY

RONALD REAGAN, Governor

DEPARTMENT OF PUBLIC WORKS
DIVISION OF HIGHWAYS
MATERIALS AND RESEARCH DEPARTMENT
5900 FOLSOM BLVD., SACRAMENTO 95819

May 1971

Interim Report
M&R No. 632954-1
D-4-23

Mr. J. A. Legarra
State Highway Engineer

Dear Sir:

Submitted herewith is a research report titled:

FIELD PERFORMANCE EVALUATION

of

SOIL PRESSURE CELLS
(General Transducer Company)

TRAVIS SMITH
Principal Investigator

EARL SHIRLEY
Co-Investigator

Analysis and Report by
C. A. Frazier
J. F. Boss

Very truly yours,

JOHN L. BEATON
Materials and Research Engineer

ClibPDF - www.fastio.com

ClibPDF - www.fastio.com

REFERENCE: Smith, Travis, Shirley, Earl, Frazier, Charles, and Boss, John F., "Field Performance of Soil Pressure Cells (General Transducer Company)", State of California, Department of Public Works, Division of Highways, Materials and Research Department, Interim Research Report 632954-1, May 1971.

ABSTRACT: During the summer of 1968, a total of 81 soil pressure cells, manufactured by the General Transducer Company of Burlingame, California, were installed in two highway embankments located in Northern California. A description of the cell design, compliance tests performed on each cell, and methods of installing the cells in the embankments are described. Evaluation of cell performance, based on the cell data acquired during and subsequent to construction of each embankment, is presented. The methods used to indicate certain types of cell failure after installation and interpretation of cell data are discussed.

KEY WORDS: Soil pressure, pressure cells, measurements, evaluation, installation, in situ methods, instrumentation, field tests.

ClibPDF - www.fastio.com

ACKNOWLEDGMENTS

The researchers wish to express their appreciation to the personnel of District 01 (Eureka) and District 02 (Redding) Construction Departments, and particularly Mr. H. Benedict, Highway Resident Engineer; Mr. I. Schroeder, Bridge Resident Engineer; and Mr. L. Ferroni, Bridge Department Coordinator for their assistance at Cedar Creek Culvert and Embankment and to Mr. E. Poch and Mr. H. Mitchell, Resident Engineers, for their assistance at Jail Gulch Embankment.

This work was performed under the HPR Work Program in cooperation with the U.S. Department of Transportation, Federal Highway Administration.

The opinions, findings, and conclusions expressed in this publication are those of the authors and not necessarily those of the Federal Highway Administration.

ClibPDF - www.fastio.com

TABLE OF CONTENTS

	Page
ABSTRACT	i
ACKNOWLEDGMENTS	ii
LIST OF FIGURES	iv
INTRODUCTION	1
CONCLUSIONS AND RECOMMENDATIONS	2
DISCUSSION	3
A. CELL CONSTRUCTION	3
B. READOUT INSTRUMENTS	6
C. CELL COMPLIANCE TESTING AND CALIBRATION	6
1. Compliance Tests	6
2. Cell Calibration	7
3. Comments	7
D. CEDAR CREEK CULVERT AND EMBANKMENT	7
1. Site Description	7
2. Installation	10
3. Data Collection	12
4. Analysis	12
E. JAIL GULCH EMBANKMENT	25
1. Site Description	25
2. Installation	25
3. Data Collection	31
4. Analysis	31
F. GENERAL EVALUATION	36
BIBLIOGRAPHY	38
APPENDIX	
A. Specification No. 1 Soil Pressure Stress Meter Specifications	
B. Specification No. 2 Concrete-Soil Interface Pressure Stress Meter Specifications	

ClibPDF - www.fastio.com

LIST OF FIGURES

Figure No.	Title	Page
1	Soil Stress Cell GT-621	4
2	Concrete-Soil Interface Stress Cell GT-601	4
3	General Transducer Diaphragm Strain Gage	5
4	Pressure Cell Bridge and Readout Device Circuit Diagram	5
5	Location Map - Cedar Creek Culvert	8
6	Instrumentation Locations, Cedar Creek Embankment	9
7	View of Completed Cedar Creek Culvert	11
8	Soil pressure cell lead wires routed through culvert wall	11
9	Junction box with pressure cell lead wires	13
10	Bottom segment of telescoping pipe slip joint assembly cast into culvert crown	13
11	Strain gage indicator	14
12	Data collection point located inside culvert at crown	14
13	Cedar Creek - Cell & Overburden Pressure vs. Time-Cells above crown at Arch 4	15
14	Cedar Creek - Cell & Overburden Pressure vs. Time-Cells above crown at Arch 6	16
15	Cedar Creek - Cell & Overburden Pressure vs, Time-Cells above crown at Arch 8	17
16	Cedar Creek - Cell & Overburden Pressure vs. Time-Cells above crown at Arch 10	18
17	Cedar Creek - Cell & Overburden Pressure vs. Time-Cells near footings at Arch 10	19
18	Cedar Creek - Cell & Overburden Pressure vs. Time-Cells above crown at Arch 13	20
19	Cedar Creek - Cell & Overburden Pressure vs. Time-Cells near footings at Arch 13	21
20	Cedar Creek - Cell & Overburden Pressure vs. Time-Cells above crown at Arch 15	22

ClibPDF - www.fastio.com

LIST OF FIGURES (contd)

Figure No.	Title	Page
21	Cedar Creek - Cell & Overburden Pressure vs. Time-Cells above crown at Arch 17	23
22	Cedar Creek - Cell & Overburden Pressure vs. Time-Cells above crown at Arch 19	24
23	Location Map - Jail Gulch Embankment	26
24	Pressure Cell Cluster Locations - Jail Gulch Embankment	27
25	View of Jail Gulch prior to Embankment Construction	28
26	Soil Texture of Embankment Material at Pressure Cell Cluster 1	28
27	Soil Texture of Embankment in instrumentation Trench	29
28	Digging instrumentation pit	29
29	Instrumentation shelter	29
30	Jail Gulch Embankment - Fill Load and Indicated Principal Stresses v. Time at Pressure Cell Cluster 1	32
31	Jail Gulch Embankment - Fill Load and Indicated Principal Stresses vs. Time at Pressure Cell Cluster 2	33
32	Jail Gulch Embankment - Fill Load and Indicated Principal Stresses v. Time at Pressure Cell Cluster 8	34
33	Jail Gulch Enbankment - Effect of Backfill Type on Indicated Vertical Stress	35

ClibPDF - www.fastio.com

ClibPDF - www.fastio.com

INTRODUCTION

Over recent years, an increasing amount of attention has been given to the determination of stresses developed in large highway embankments. For many years, this department has initiated a number of projects involving the installation of soil pressure cells at selected sites within earth embankments for the purpose of collecting data on earth pressures during construction, and for a period of two to five years after completion of the embankment.

Currently two major types of studies are being conducted by the California Division of Highways in which soil stress data is collected and analyzed: (1) Those involving measurement of the magnitude and direction of the principal stresses within a high embankment, and (2) those involving measurement of the magnitude and distribution of earth pressures acting on culverts underneath high fills. Information developed from these studies will be used to check current design criteria for high fills and conduits underneath them. This has already been accomplished for several conduits[1] [2] [3]

Basically, two types of pressure cells are required. One is for use at the interface of soils and rigid to semirigid objects (i.e., soil-concrete interface) while the other type is installed within the soil mass. Usually, an installation of a considerable number of both types of cells is necessary.

Originally, earth pressure cells were purchased in small quantities, as needed, However, in 1966, it was felt that the number of cells to be purchased warranted competitive bidding. Accordingly, specifications were written and bids were solicited. It was anticipated that this change in purchasing procedure would not only reduce pressure cell cost but also insure greater reliability, since cells would have to meet rigid requirements.

In 1966 and 1967, approximately 900 pressure cells were purchased through competitive bidding. The unit cost was reduced approximately 22% from previous purchase prices. In October 1967, the successful bidder for a large order of these pressure cells was the General Transducer Company of Burlingame, California. A copy of the specifications for this purchase is included in the Appendix of this report. A number of these ("Gentran") pressure cells were used in high embankment studies at the Jail Gulch Embankment on Interstate Route 5 near Yreka, Siskiyou County, California, and at Cedar Creek Arch Culvert and Embankment on U.S. Highway 101 near Leggett, Mendocino County, California. Because of the somewhat erratic behavior of previous pressure cell installations experienced by this department and the expense of these devices, this project was initiated in 1965 to evaluate commercial soil pressure cells in terms of reliability, accuracy and long-term stability.

The first interim report [4] presented the results of a laboratory and field evaluation of commercial soil pressure cells. The following report presents the results of a similar evaluation of the General Transducer (Gentran) cells.

ClibPDF - www.fastio.com

CONCLUSIONS AND RECOMMENDATIONS

1. Earth pressure cell failure rates of 7% in one site and 36% in a second site were found. The failure rate at the second site is considered to be excessive, based on our previous experience with pressure cells of proven design and manufactured with good quality control. Most of the difference in the two failure rates can be attributed to two factors:

   a. The substantial difference in the nature of the embankment material at the two locations, and

   b. Better evaluation and selection of the cells prior to installation for one of the sites.

2. The specifications used for purchase of the Gentran cells were not sufficiently definitive to preclude acceptance of potentially bad cells. In particular, the sustained load test of 7 days was not of sufficient duration to determine long-range stability of a pressure cell. Cells placed under full rated load for an extended period of time have performed satisfactorily for as long as 45 days before a significant downward trend in indicated pressure was noted. Consequently, a more positive method should be employed to test the load sensing unit for leakage (i.e., pressurizing the cell cavity with helium gas prior to filling with oil).

3. Further investigation appears warranted, including the feasibility of testing the transducer assembly separately as a unit to insure against glue line creep, diaphragm malfunction or electrical failures.

4. One type of cell malfunction which cannot be detected is partial shorting between cell lead wires. If this partial short is of relatively low resistance, say 10 megohms or less, the cell may indicate a higher or lower pressure than is actually impressed on the load sensing unit. Although heavier gauge lead wire would be required, it would appear advantageous to require a 120 ohm bridge circuit be used in this type of cell thereby reducing the effect of partial shorts between lead wires.

5. Although it was specified that the pressure transducer housing shall be capable of withstanding a total shear force of 15 times the rated capacity of the cell, this was not enforced since it was not clearly stated how the shear force was to be applied. It is felt that local stresses developed in the Jail Gulch embankment may have been sufficient to shear the transducer housing from the pressure sensing element. A sudden drop in indicated stress to a negative value, as would be indicated if such a malfunction occurred, was recorded in a number of the "failed" cells at this location. It is concluded that a lower, more realistic shear force should be specified and that a suitable method be developed to test this specification requirement.

6. Additional investigation of means to protect cell lead wires, particularly at the readout terminal, and the effects of present methods on the accuracy of collected data would be productive. There is little doubt that

ClibPDF - www.fastio.com

the terminal plugs used at Cedar Creek provides a more convenient method for data collection and better protection of cell lead wires than the method used at Jail Gulch. Because of the infinitestimally small changes in resistances being measured, it is imperative that the best possible contact be made between lead wires and the readout device. The use of large terminal plugs and associated equipment increases the possibility of poor connections, hence, may not be the most satisfactory method.

On the other hand, the method used at Jail Gulch, where the lead terminals are connected directly to the readout device, presents a different type of problem. It is possible that low conductive shorts, caused by moisture condensation, are present between lead wires.

7. Normally, data are collected from pressure cells during a period of three to five years or longer. During this time, the readout device initially used on the project may be damaged or replaced. Even if the same readout device is used throughout the useful life of the cells, the characteristics of the readout device may change. For these reasons, a study should be initiated to determine the reliability of data collected by more than one reading device.

8. Different calibration techniques should be investigated. Those employing a known surface stress condition such as imposed by pneumatic or hydrostatically applied loads may be desirable.

DISCUSSION

A. Cell Construction

The Gentran pressure cell is a hydroelectrical device consisting of a hydraulic load sensing unit and an electrical pressure transducer. The construction of the soil pressure cell and the concrete-soil interface pressure cell differ only in the location of the pressure transducer and dimensions of the load sensing unit as shown in Figures 1 and 2.

The load sensing unit consists of two machined steel plate diaphragms welded together so as to form a central cavity. The cavity contains a lightweight machine oil which transmits applied pressures to the pressure transducer diaphragm. A flexure groove milled around the periphery of one of the plates minimizes dishing of the plate diaphragms.

The pressure transducer is a 350 ohm four-active-arm Wheatstone bridge strain gage assembly mounted on a thin diaphragm. This assembly is housed in a 1-3/4 inch length of 1/2-inch diameter pipe attached to the load sensing unit. Electrical current is transmitted to the transducer by a neoprene jacketed, four-conductor cable.

ClibPDF - www.fastio.com

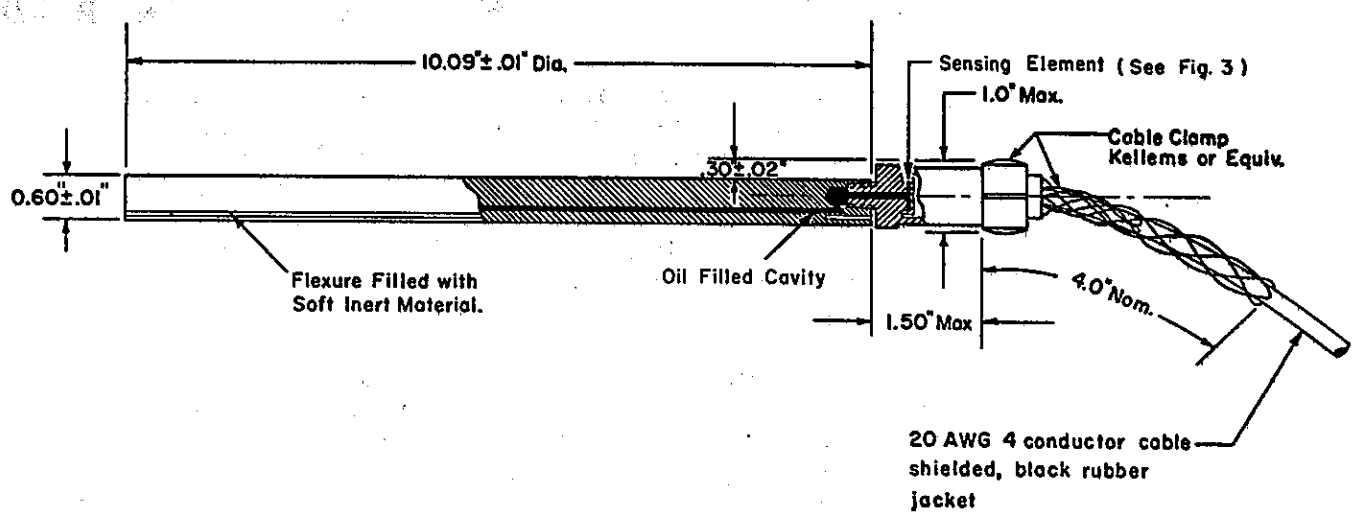

Figure 1. SOIL STRESS CELL GT-621

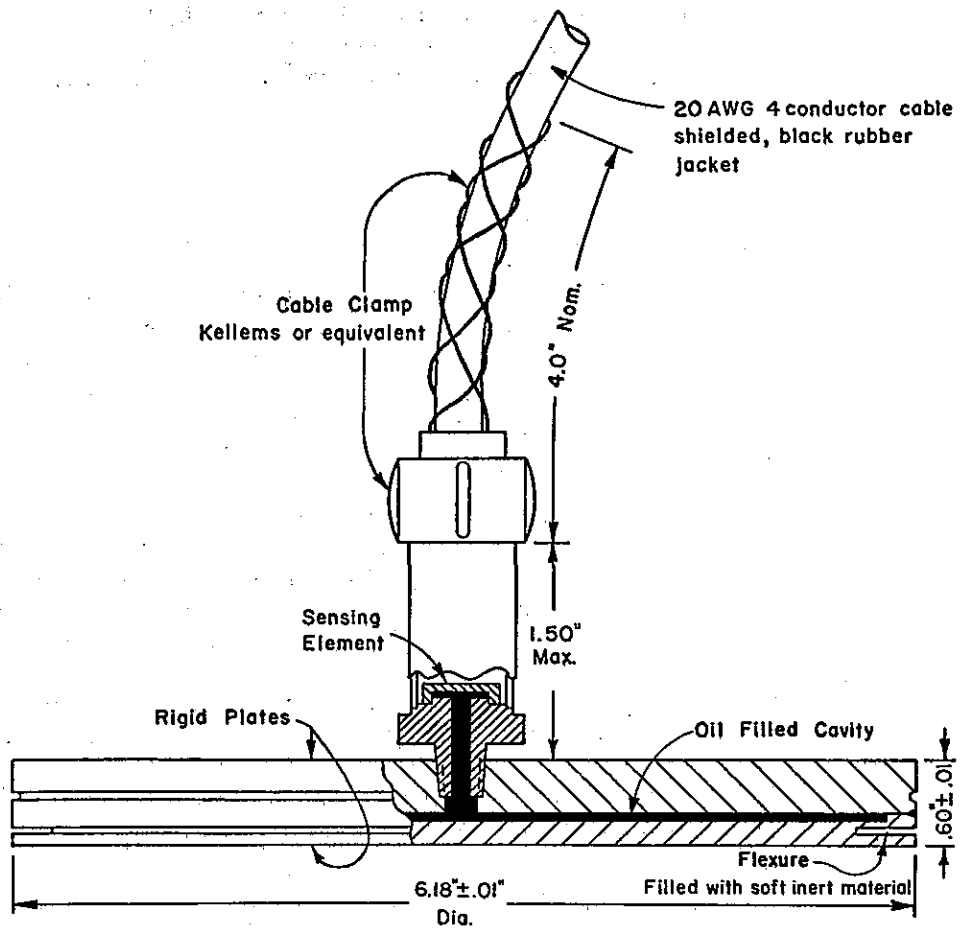

Figure 2. CONCRETE-SOIL INTERFACE STRESS CELL GT-601

ClibPDF - www.fastio.com

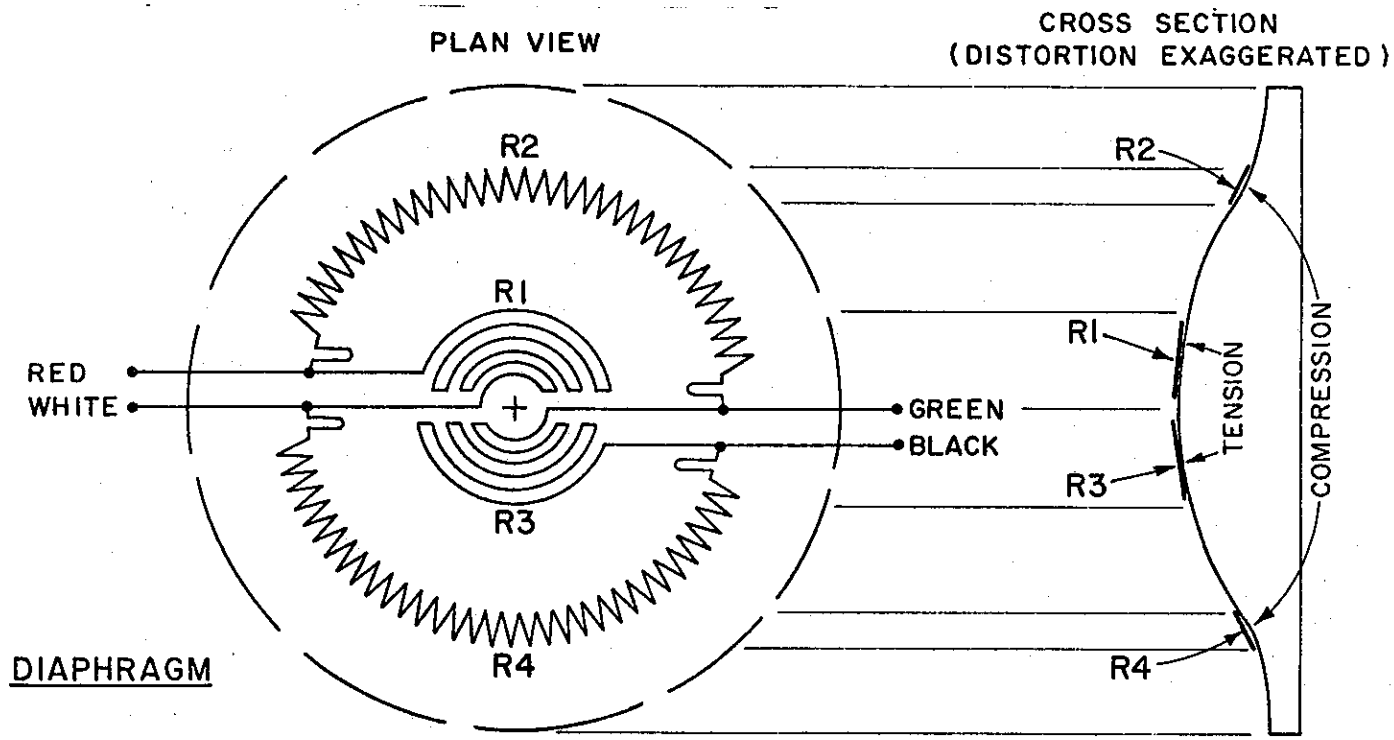

Figure 3. DIAPHRAGM TYPE STRAIN GAGE

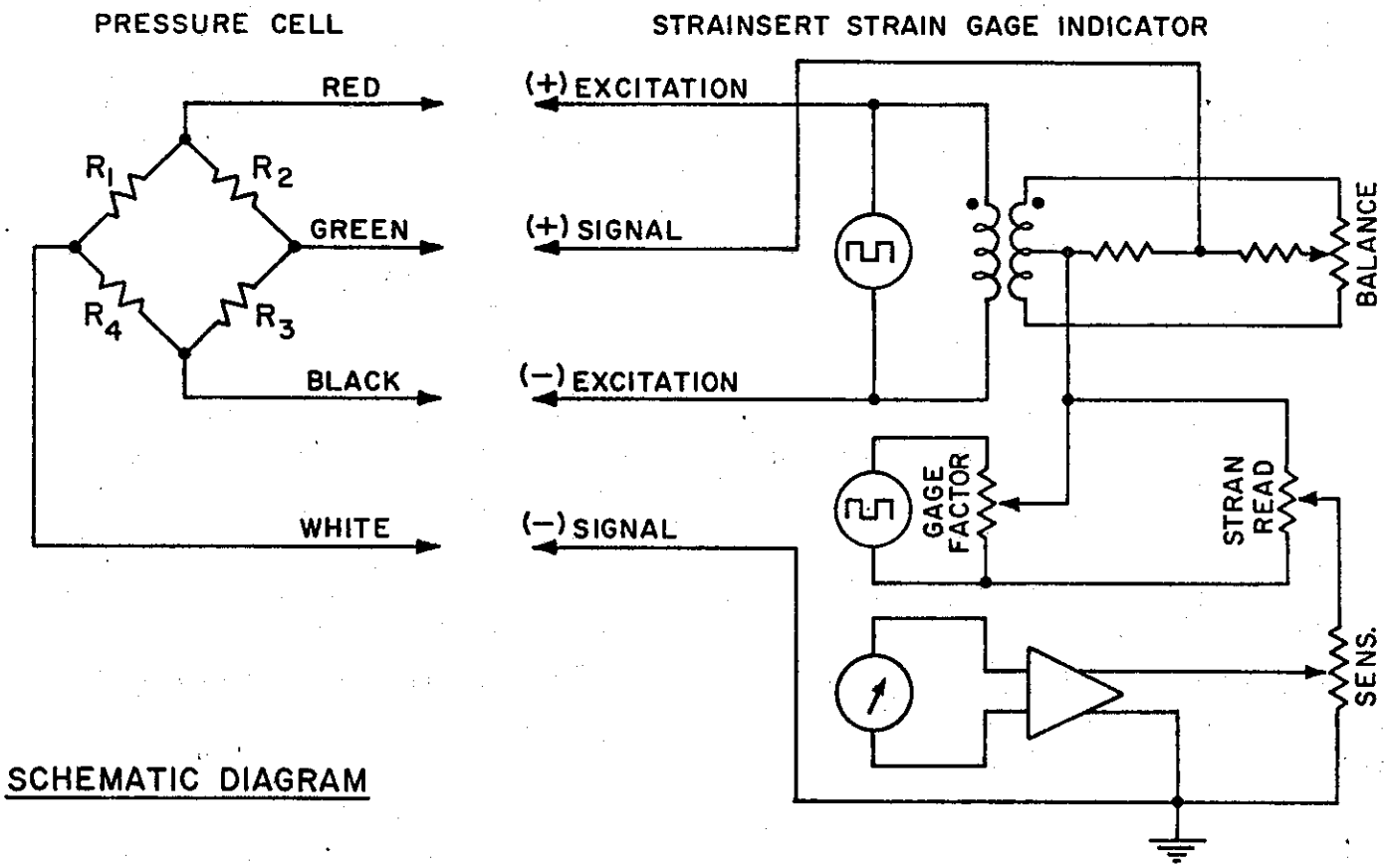

Figure 4. PRESSURE CELL BRIDGE AND READOUT DEVICE

ClibPDF - www.fastio.com

B. Readout Instruments

Three different readout devices have been used to calibrate and collect data from the pressure cells. The "Dymec Data Collection System," now being used at the Cedar Creek site, records the data directly on magnetic tape as millivolt output from the strain gage circuit when a known (10-volt) potential is applied to the input. At the Jail Gulch embankment a "Budd" dial reading strain gage indicator and a "Strainsert" digital reading strain gage indicator were used. Although there are some minor differences between the two strain gage indicators, both of these readout devices operate in essentially the same manner and the readings from each cell are recorded manually. Figure 4 is a generalized schematic diagram of the pressure cell strain gage bridge and Strainsert indicator.

C. Cell Compliance Testing and Calibration

1. Compliance Tests

Each of the pressure cells was tested for compliance to our purchase specifications. Lack of time and manpower precluded a complete compliance test program to the extent outlined in the specifications. Acceptance was therefore based on the following list of tests and procedures:

a. Load Deflection Tests: Excessive strain in the load sensing unit will, in almost every case, cause an underregistration of soil stress. For this reason, a maximum deflection of the load sensing unit was specified. Three dial indicators (.001" accuracy) in line across the face of the load sensing unit (one at each edge and one at the center) monitored the pressure cell face deflection at maximum load.

b. Water Immersion Test: Pressure cells are frequently installed in locations which will be either intermittently or continuously saturated. Therefore, to provide stress data over a period of several years, positive sealing of the pressure transducer is imperative. To test the integrity of this seal, the cells were submerged in a constant-temperature water bath for one week. Resistance to ground of the strain gage transducers was read prior to placing the cells in water and again at the completion of the test, while still submerged. Any reduction in resistance after being inundated for one week would indicate a short created by seal leakage in the pressure transducer unit.

c. Temperature Susceptibility Test: The temperature susceptibility test was performed in conjunction with the Water Immersion Test. Prior to submerging the cells in the water bath, no-load resistance readings were taken for each cell. At the end of a one week test period, the temperature of the water bath was increased 20° F and held at that temperature for one day. Resistance readings were then taken and the percent of zero shift calculated for each cell.

ClibPDF - www.fastio.com

d. Sustained Load Test: Since many earth-stress studies span over a period of several years, pressure cells must function properly for that period of time. Any leakage in the hydraulic system or malfunction of the transducer assembly will destroy the integrity of the cell and make further readings useless. Each pressure cell was loaded to its maximum rated load and held there for at least one week to test the integrity of the hydraulic system in the load sensing unit and the glue line creep of the transducer unit. Pressure readings were taken daily during this period and any oil leakage was noted. Oil leakage or a significant change in indicated stress was cause for rejection of the cell.

2. Cell Calibration

Cell calibration was conducted in a loading frame with the cell sandwiched between two hardwood blocks. Pressure was applied to one of the blocks with a hydraulic jack and the applied load monitored by a calibrated load cell placed in contact with the other hardwood block. Initially, readings were obtained on each cell at zero load andat each 20% increment of the cell capacity. This data and manufacturer's calibration data indicated nearly linear calibration curves. Consequently, calibration constants for the remainder of the cells were based only on the zero and maximum rated load readings.

Pressure cells used in Jail Gulch were also calibrated using rubber belting as a backing material. For this configuration, however, the curves obtained were not as reproducible nor as steep as those resulting from the hardwood block calibration. Output difference varied from 6 to 113% greater than the rigid calibration and resulted in indicated stresses deviating more sharply from the theoretical. For this reason, all plotted data was based solely on the calibration curve obtained using the hardwood blocks.

3. Comments

In all, about one-fourth of the pressure cells supplied by the manufacturer were returned for failure to meet compliance test requirements. Of those returned, most were rejected for failures when subjected to the sustained load test. These were mechanical failures due principally to leakage.

D. Cedar Creek Arch Culvert and Embankment

1. Site Description

Cedar Creek culvert is a 22-foot concrete arch structure located on U.S. Highway 101 in Mendocino County approximately two miles south of the town of Leggett (See location map, Figure 5). This 763-foot long culvert has a maximum of approximately 200 feet of embankment over the crown. The embankment material consists of a clayey, gravelly

ClibPDF - www.fastio.com

In Mendocino County
between 0.8 mile north of Cummings and 0.9 mile north of Cedar Creek

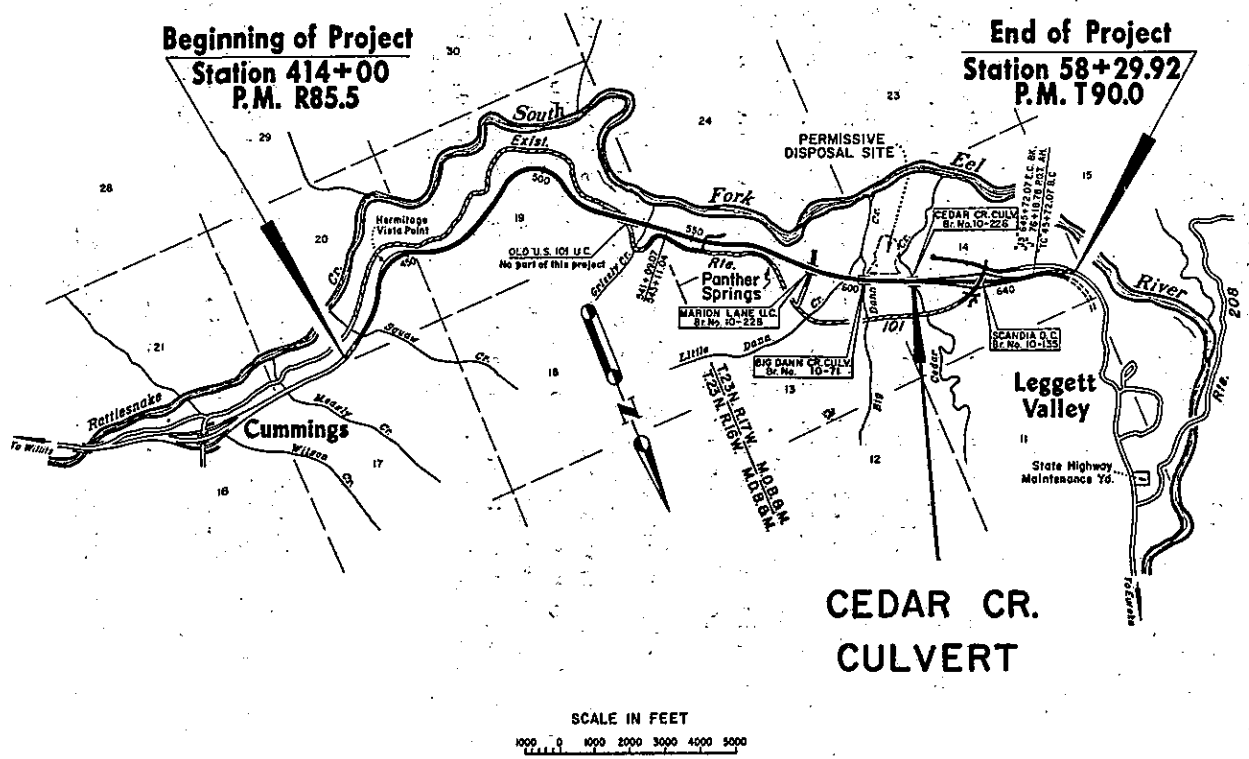

Length of Project = 4.5 miles

Figure 5

ClibPDF - www.fastio.com

CEDAR CREEK EMBANKMENT
INSTRUMENTATION LOCATIONS

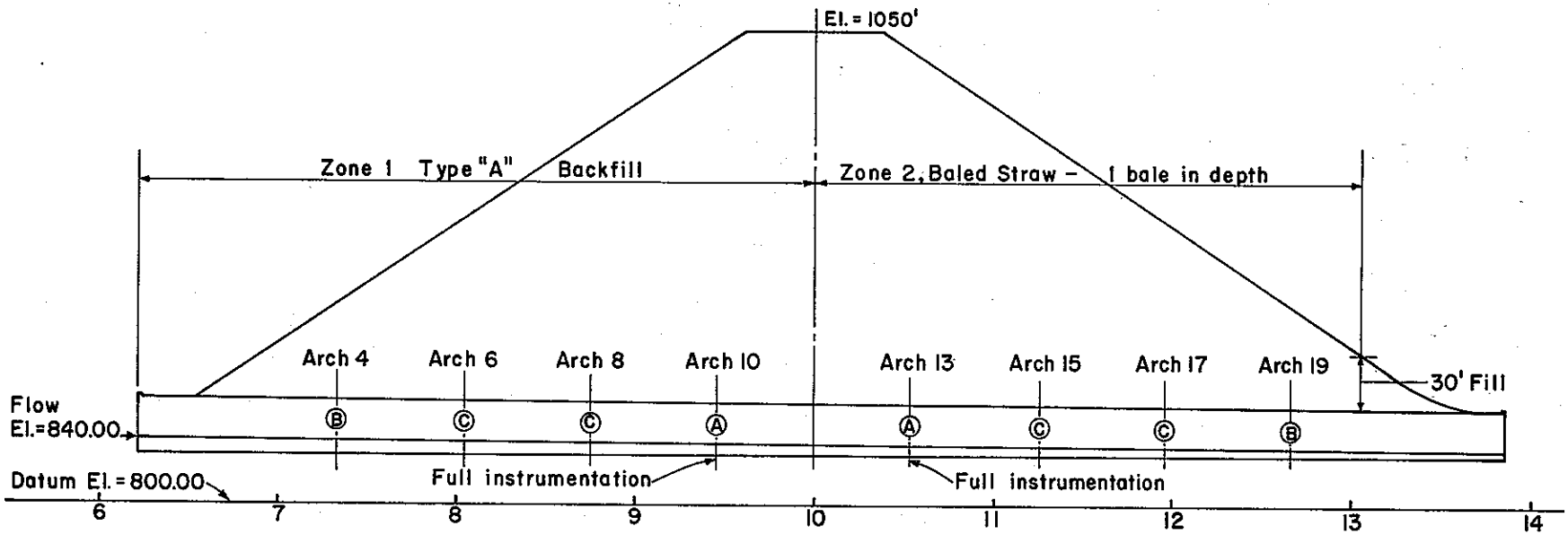

LONGITUDINAL SECTION

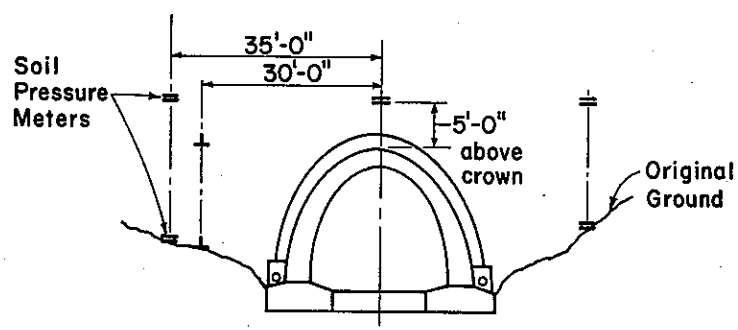

LAYOUT OF SOIL PRESSURE METERS
LOCATION A

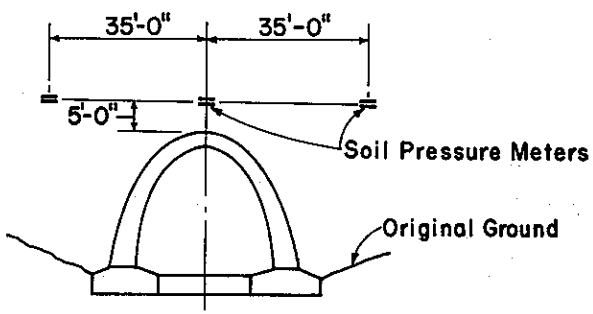

LAYOUT OF SOIL PRESSURE METERS
LOCATION B AND C

Figure 6

ClibPDF - www.fastio.com

sand of low to moderate plasticity. The view in Figure 7 is from the downstream end of the culvert prior to placing the backfill and embankment. The bridge shown in the background carries traffic on the existing highway and is approximately the same elevation as the top of embankment over the culvert. (Note the steep side slopes of 1:1 or steeper at the bottom of this V-shaped canyon.)

2. Installation

Figure 6 shows the locations of instrumentation placed in the embankment. (Note that arches 4-10 were covered with Method A backfill (3" max. aggregate) according to California Standard Specifications, Sec. 19-3.06 (1964), whereas arches 13-19 were covered with baled straw). Three Gentran soil pressure cells were installed five feet above the crown of the culvert at each of eight instrumentation planes. An additional cell was to be installed on original ground near each footing at the two "Type A" instrumentation planes (See Fig. 6). A total of 28 Gentran soil pressure cells were used on this project.

The four pressure cells near the culvert footings were installed late in July, 1968. Although these cells were to be placed on original ground, free water at the base of the left footing required placing these cells on approximately three feet of compacted material. The two pressure cells near the right footing were installed adjacent to a haul road used by the contractor during construction of the culvert.

These cells were installed in a pit, five by ten feet in dimension, with sloping sides approximately one foot deep. A two-foot square portion in the center of this area was prepared by removing all projecting rocks and planing the surface. A 2 to 3-inch layer of soil (passing No. 4 sieve) from the embankment material was then hand compacted on the prepared pressure cell site. After placing, the cells were covered by another three to four inches of the same material, also hand compacted. Six to 12 inches of selected material passing the 3/4" sieve was then hand compacted over the site, followed by two to three feet of embankment material, compacted with a hand guided impact compactor.

The lead wires from each pressure cell were encased in flexible metal conduit from the cell through an opening in the culvert wall as shown in photograph Figure 8. The leads were then routed through a junction box and associated cable raceway to a data collection point at the culvert crown.

Installation of the 24 cells above crown was accomplished during September, 1968. The embankment was allowed to reach a height of from two to seven feet above the planned elevation of the cells. Trenches parallel to roadway centerline were then excavated to the planned cell elevations at all instrumentation planes. Pressure cells installation procedures were similar to those installed near the footings.

ClibPDF - www.fastio.com

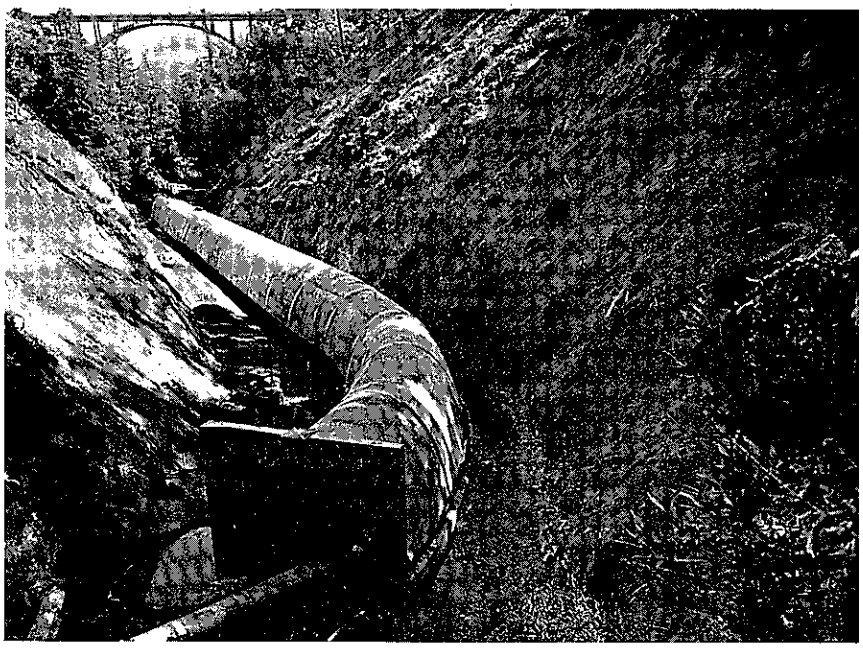

Figure 7. Cedar Creek Culvert - looking northeast from downstream end.

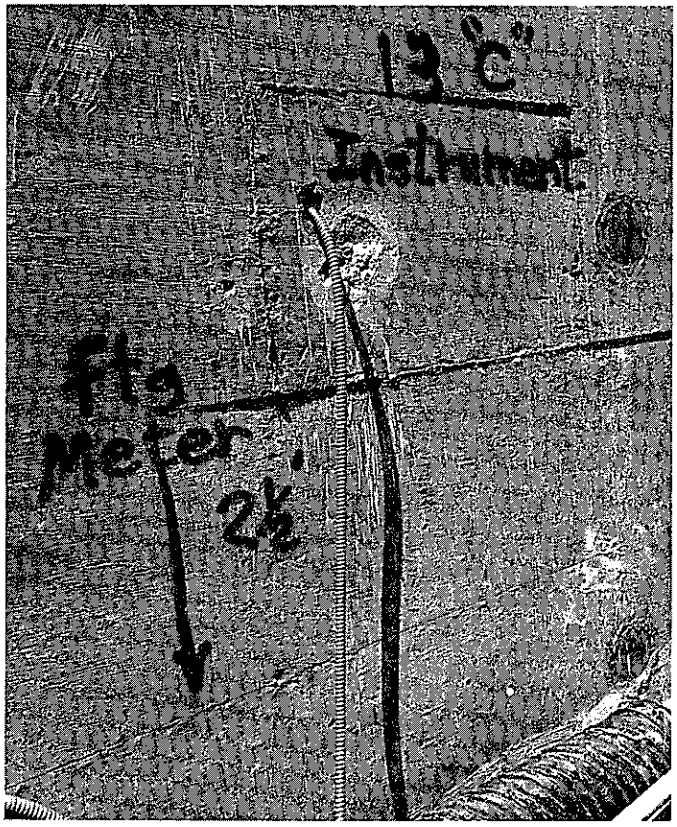

Figure 8. Soil pressure cell lead wires routed through culvert wall.

ClibPDF - www.fastio.com

Lead wires from these cells were encased in flexible metal conduit from the cell to a metal junction box attached to the top segment of a three-segment telescoping pipe slip-joint assembly. (Figure 9.) The bottom segment of this assembly was cast through the crown of the culvert (Figure 10). The cell leads were routed through the slip-joint assembly into the culvert and to a data collection point at the culvert crown. Immediately after installation, and before lead wires were connected to the data collection sockets, initial in-place readings were obtained for each cell, using a strain gauge indicator as shown in Figure 11. After the initial readings were obtained, the cell lead wires were connected to one of the sockets at a data collection point.

3. Data Collection

Two methods have been used for collecting data from all strain gage instrumentation, including the Gentran pressure cells, on this project. All soil pressure cell meter readings taken prior to October 25, 1968, were obtained using a "Strainsert" strain gage indicator. Since that date, data has been collected directly on magnetic tape for computer reduction using the "Dymec" data acquisition system.

The "Dymec" system records millivolt output from a strain gauge circuit when a known (10-volt) potential is applied to the input. An automatic switching system is included to allow data collection from up to 17 circuits at each data collection plug. In order to reduce lead wire length effects on the readings, a voltage to frequency converter was used in this system. Periodic "backup" readings, using the strain gauge indicator, indicate close agreement between the two methods.

4. Analysis

Four hundred days after installation 24 of the 28 cells were still providing reasonable data. Figures 13 to 22 illustrate the vertical pressure vs. long-time plots for various sections of the arch culvert. Of the four questionable cells, two (#510 and 511) may have developed small leaks in the hydraulic systems after 50 days, one (#3008) has developed a major hydraulic failure after 300 days and one (#3003) developed electrical problems after 35 days.

Cells 510 and 511 indicated pressures quite low in relation to the imposed overburden. Considerable arching could have existed in the vicinity of these cells but the consistently low and/or decreasing readings appears to be attributable to cell fluid leakage.

The rapid loss of pressure as shown for cell 3008 after 300 days is indicative of hydraulic leakage or circuit failure (generally from shorting by moisture). Since resistivity to ground was high in this case, it appears that this cell developed a failure in the hydraulic system.

The negative pressures indicated from cell 3003 were found to be caused by low resistance to ground either in the lead wires or moisture in the transducer housing. Response to fill loading was not expected at this instrumentation plane which is over 250 feet from roadway centerline.

ClibPDF - www.fastio.com

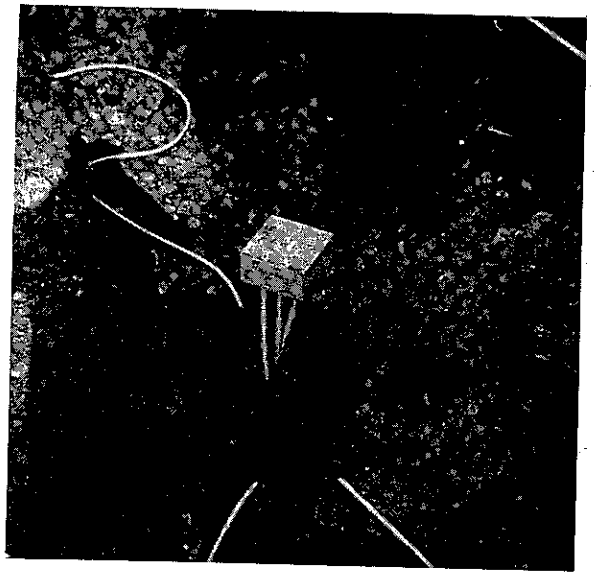

Figure 9. Junction Box with lead wires from soil pressure cells located above culvert crown.

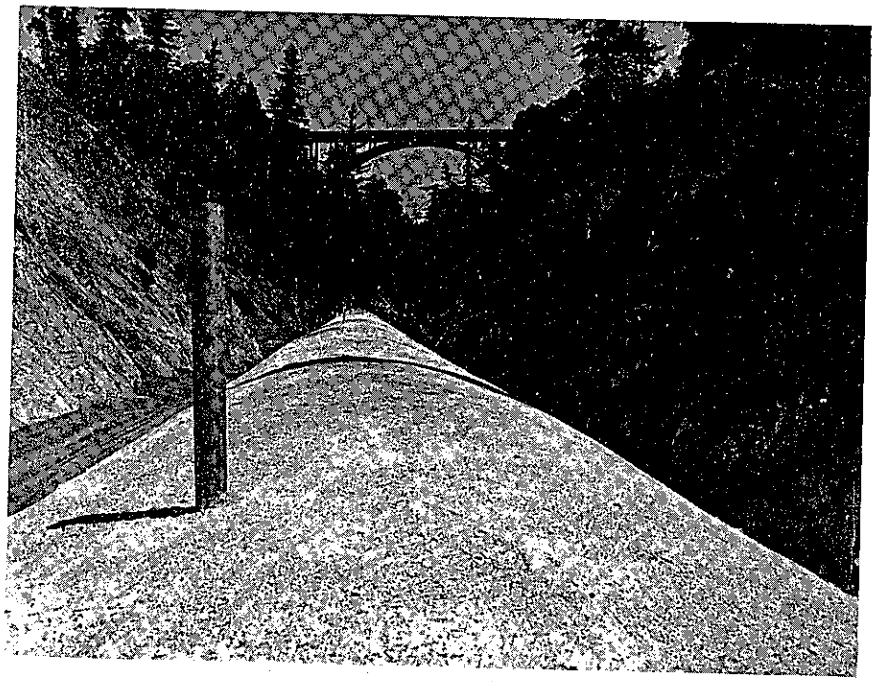

Figure 10. Bottom segment of telescoping pipe slip joint on which junction box of Fig. 9 is mounted.

ClibPDF - www.fastio.com

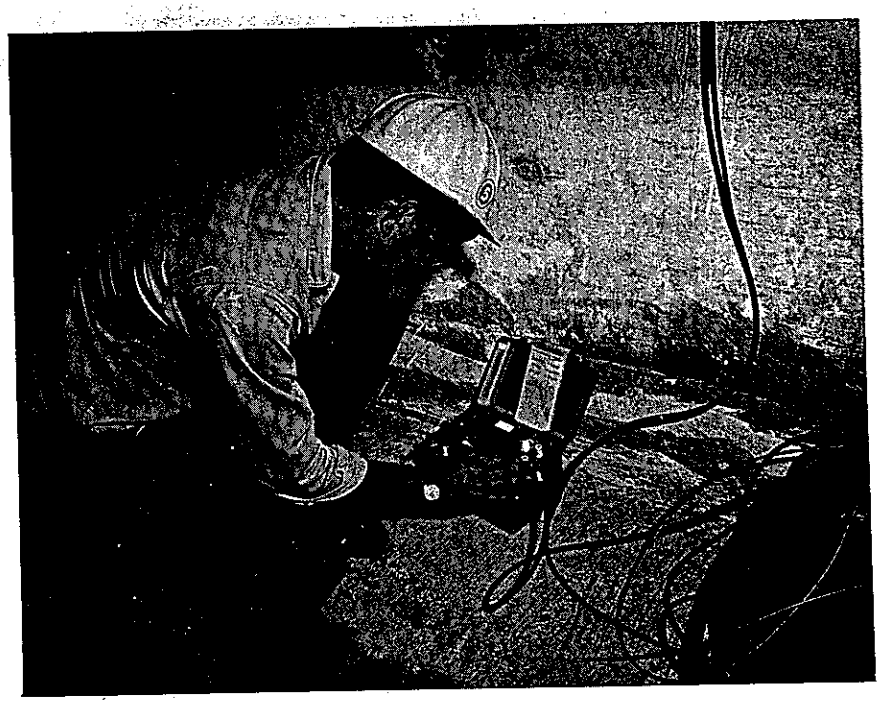

Figure 11. Strain gage indicator.

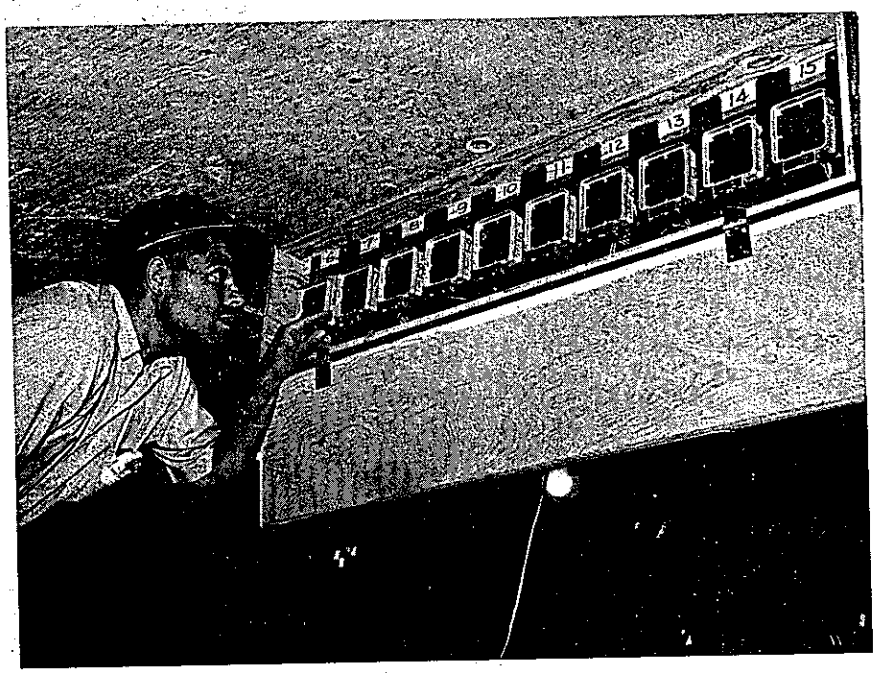

Figure 12. Data collection point located inside culvert at crown.

ClibPDF - www.fastio.com

Figure 13

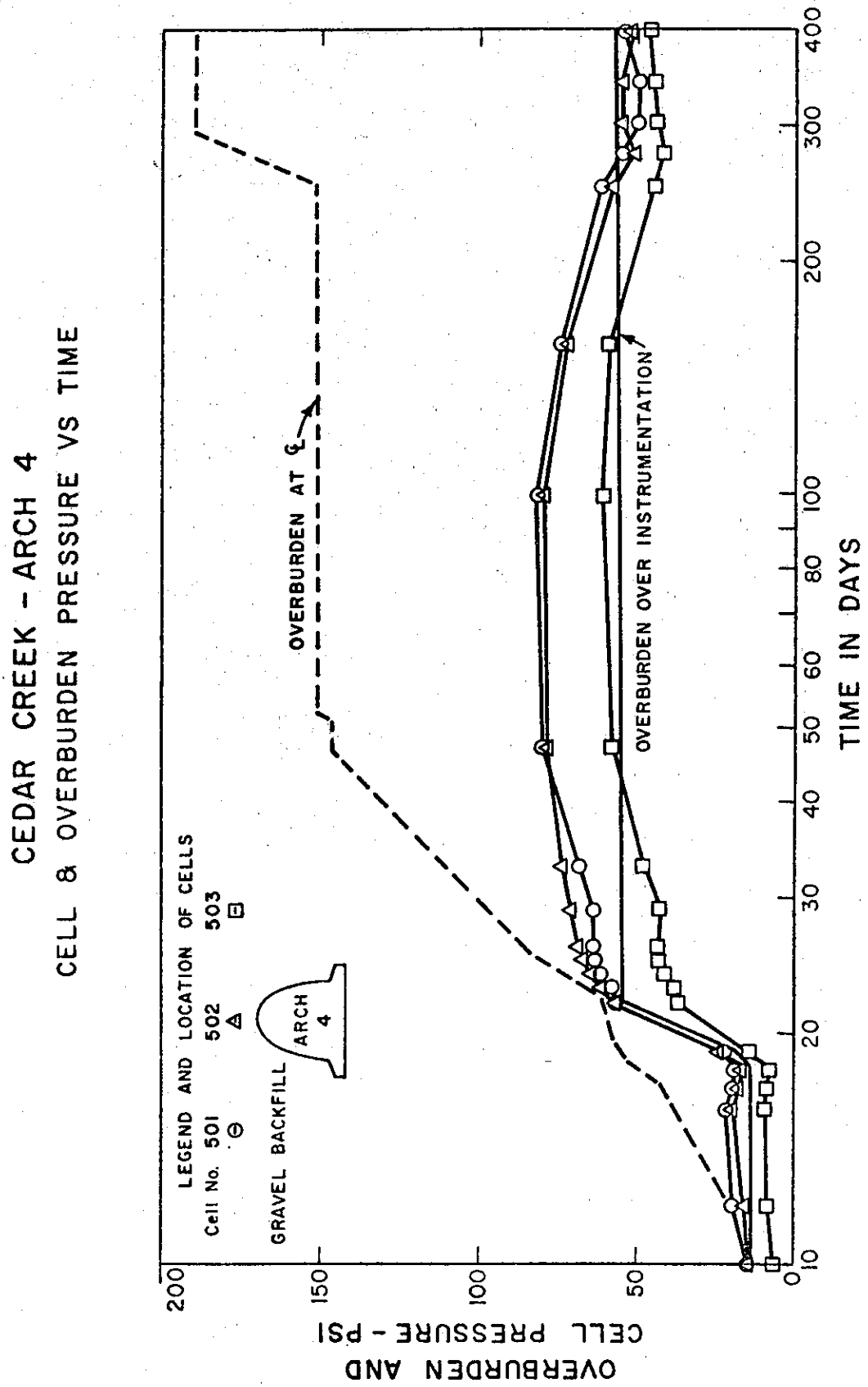

ClibPDF - www.fastio.com

Figure 14

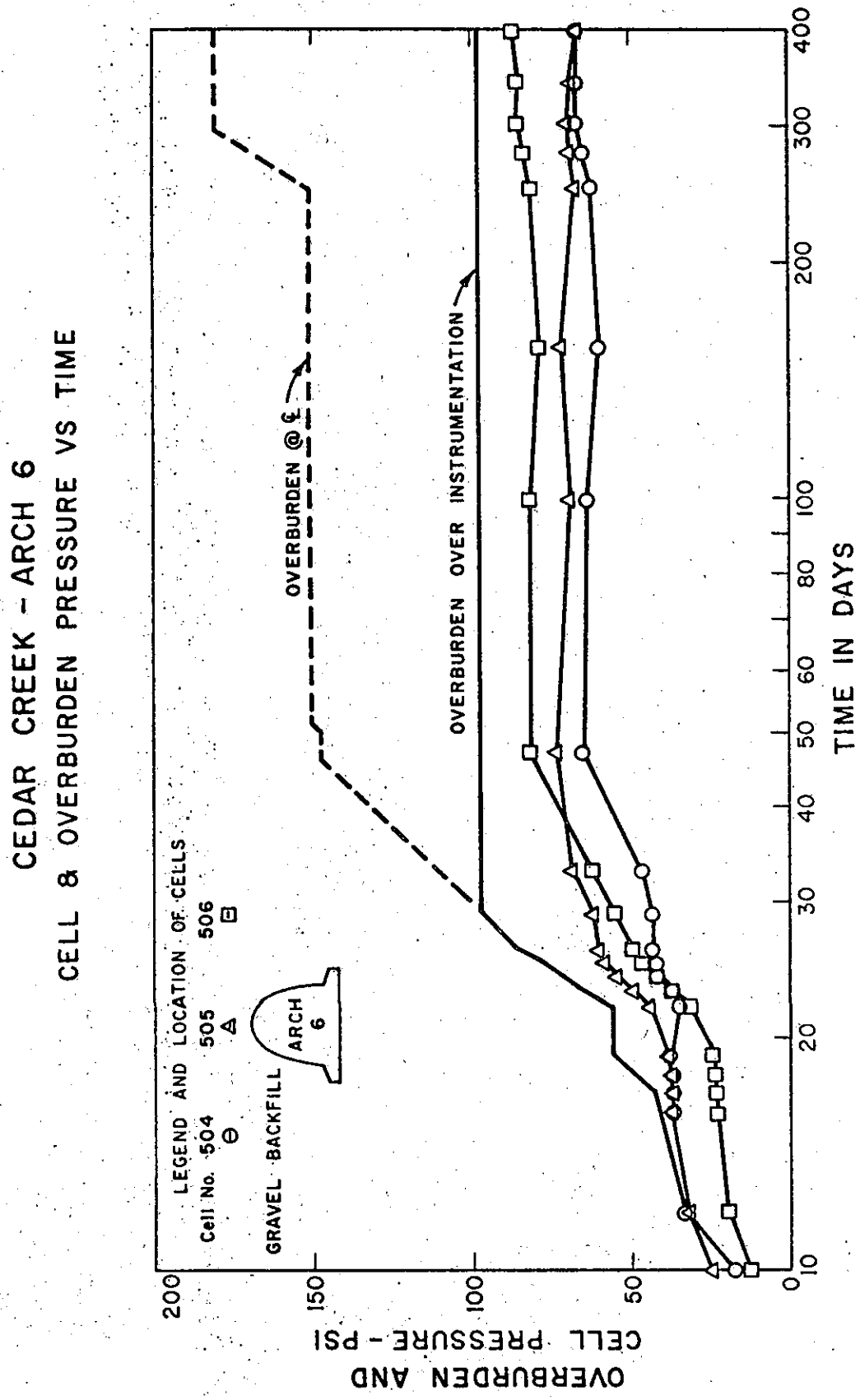

ClibPDF - www.fastio.com

Figure 15

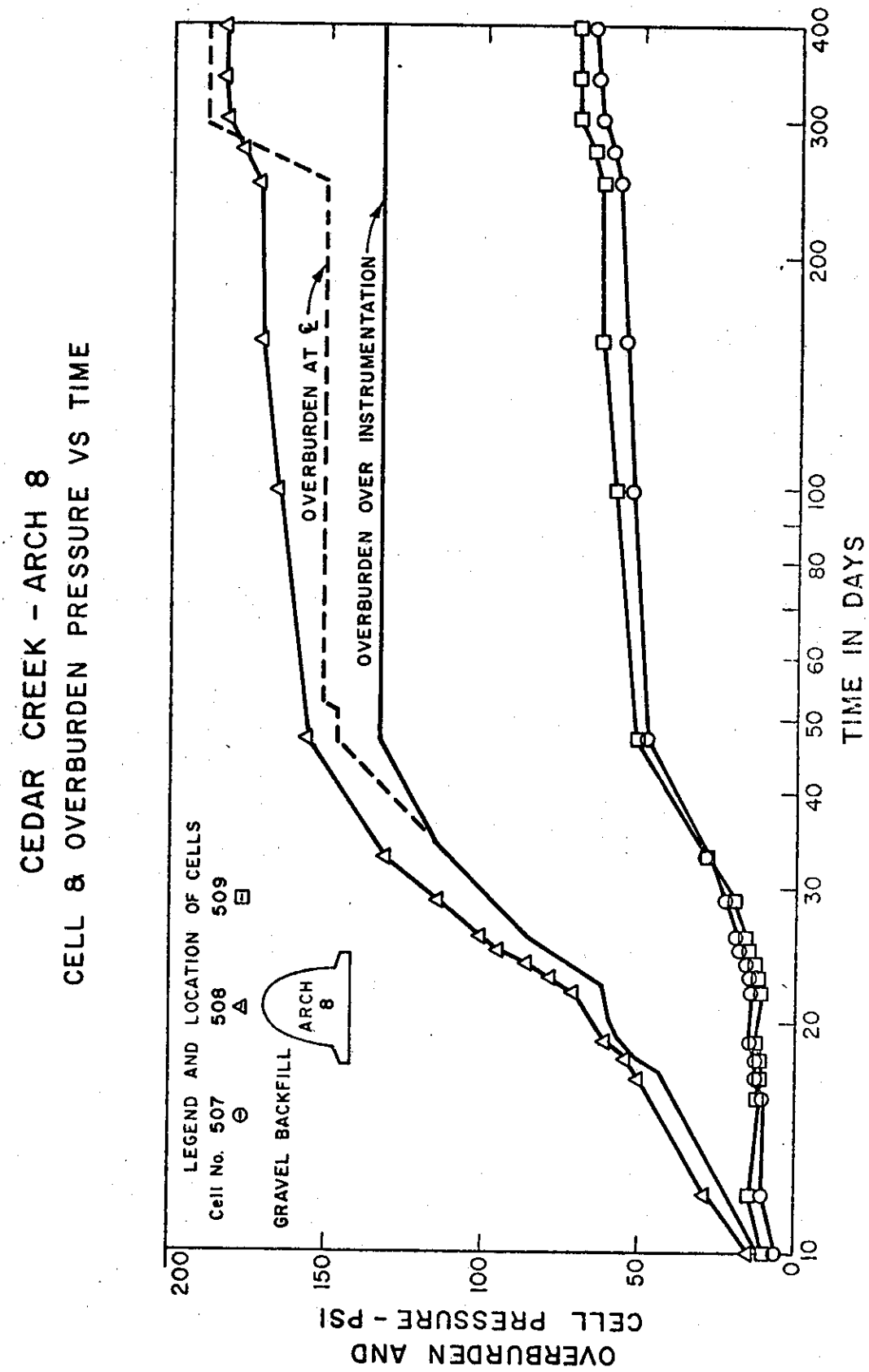

ClibPDF - www.fastio.com

Figure 16

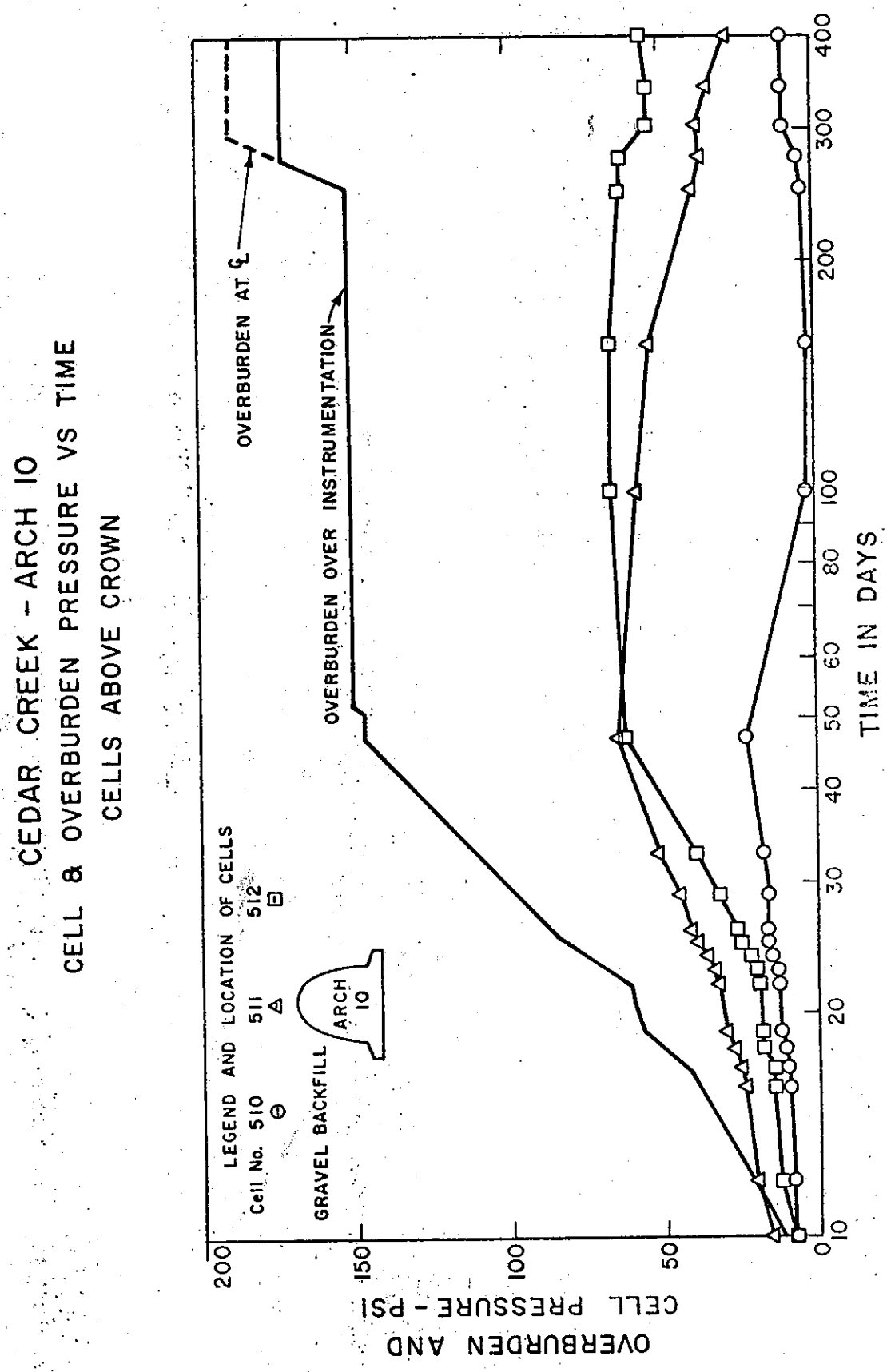

ClibPDF - www.fastio.com

Figure 17

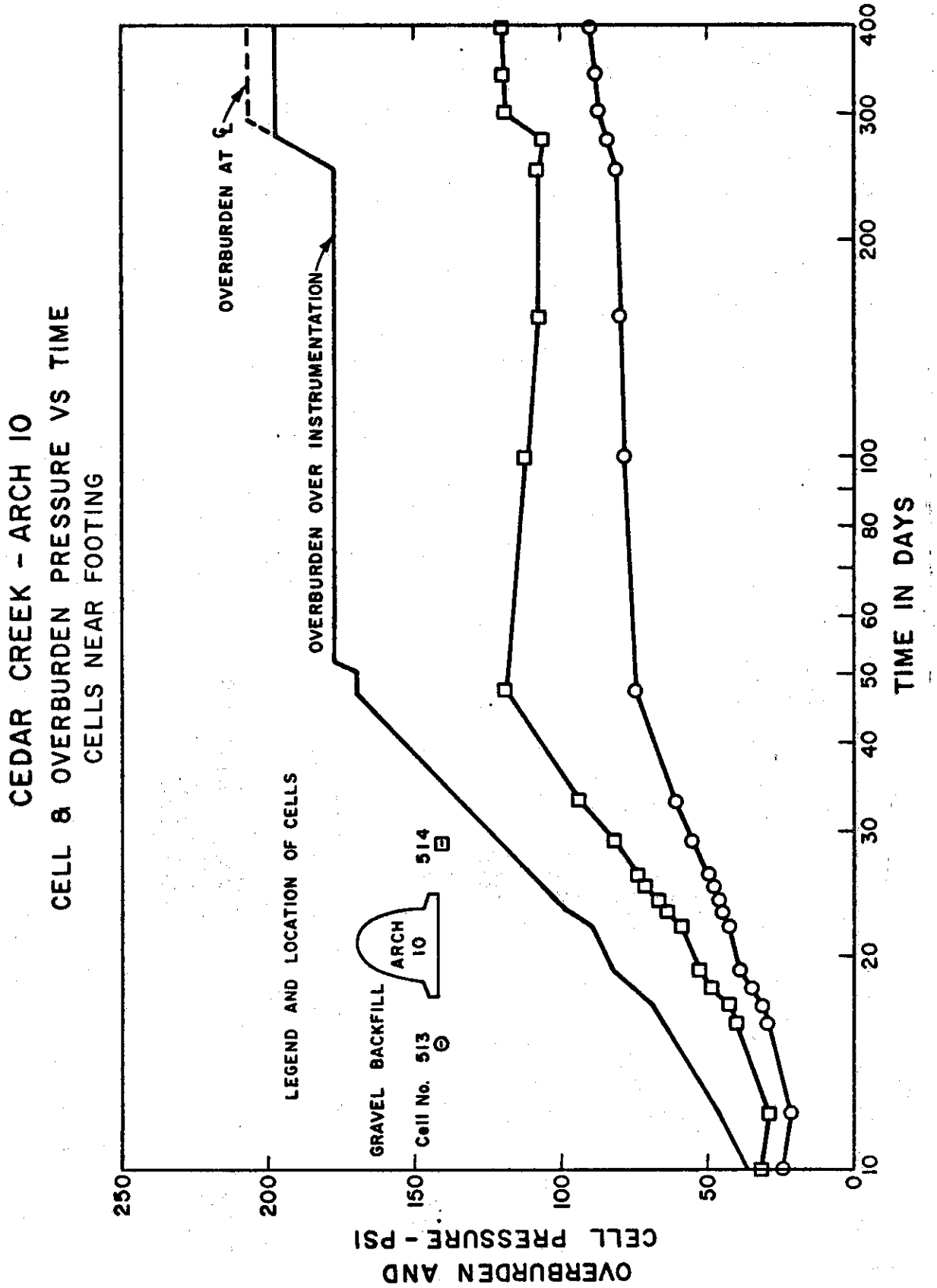

ClibPDF - www.fastio.com

Figure 18

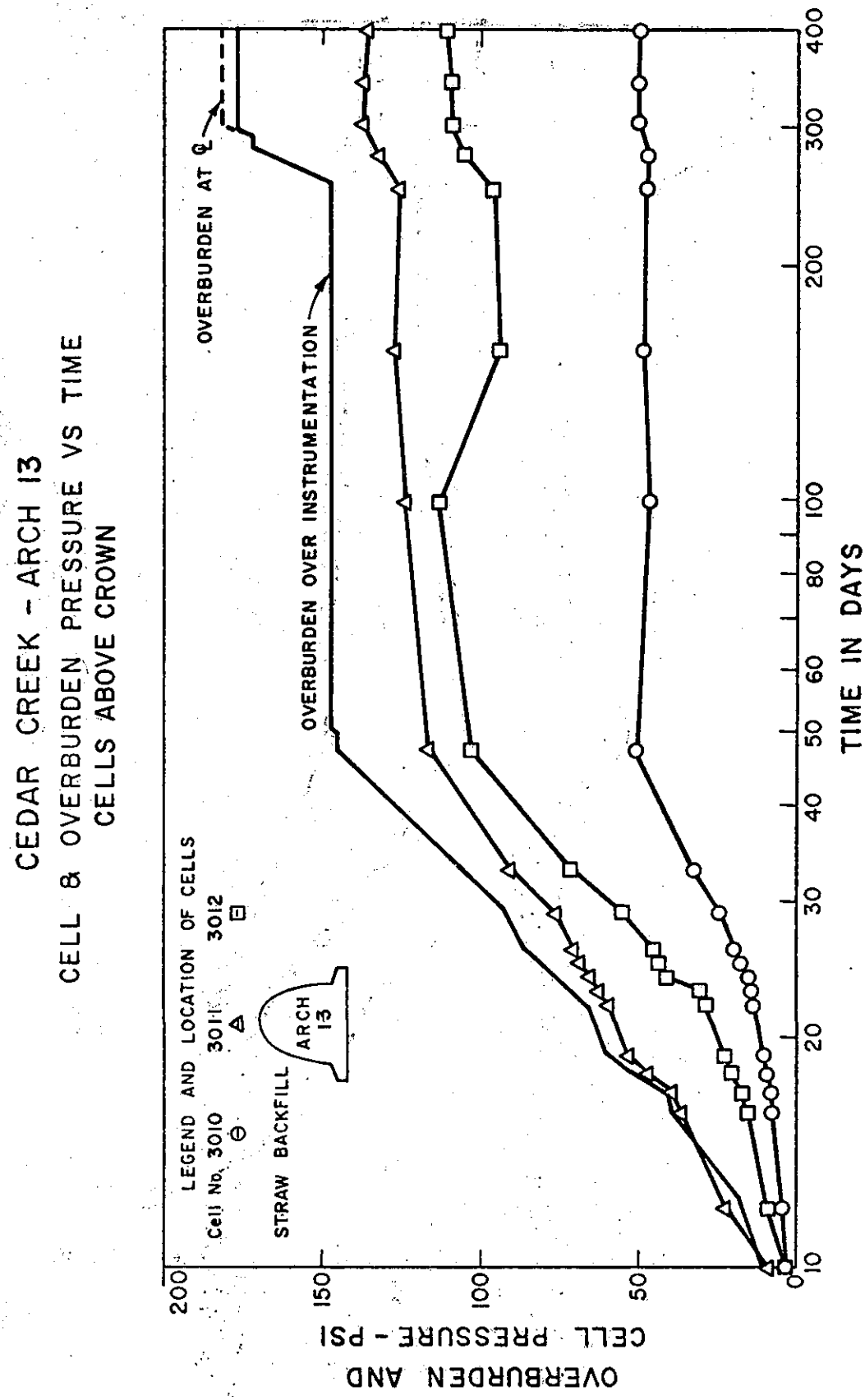

ClibPDF - www.fastio.com

Figure 19

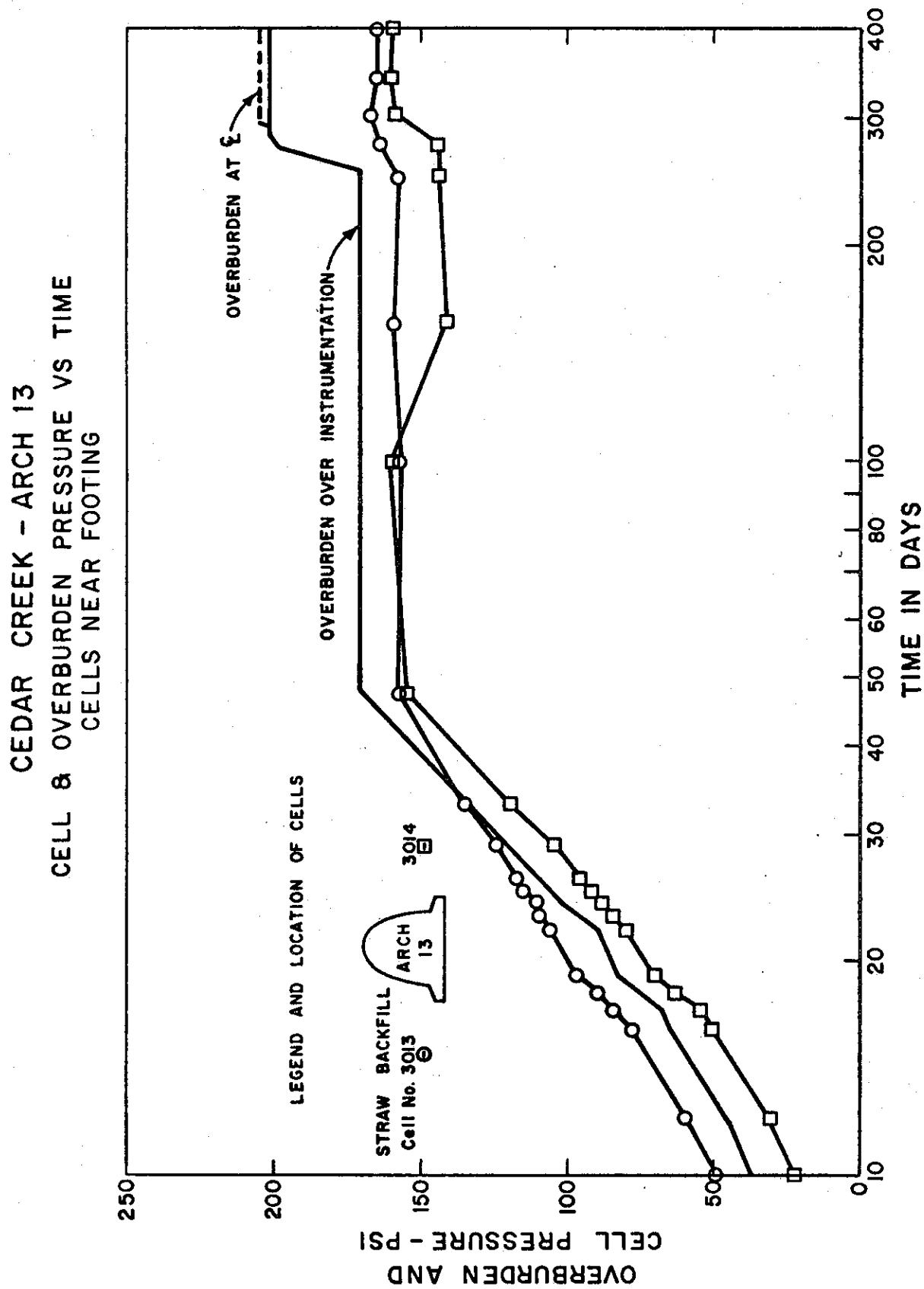

ClibPDF - www.fastio.com

Figure 20

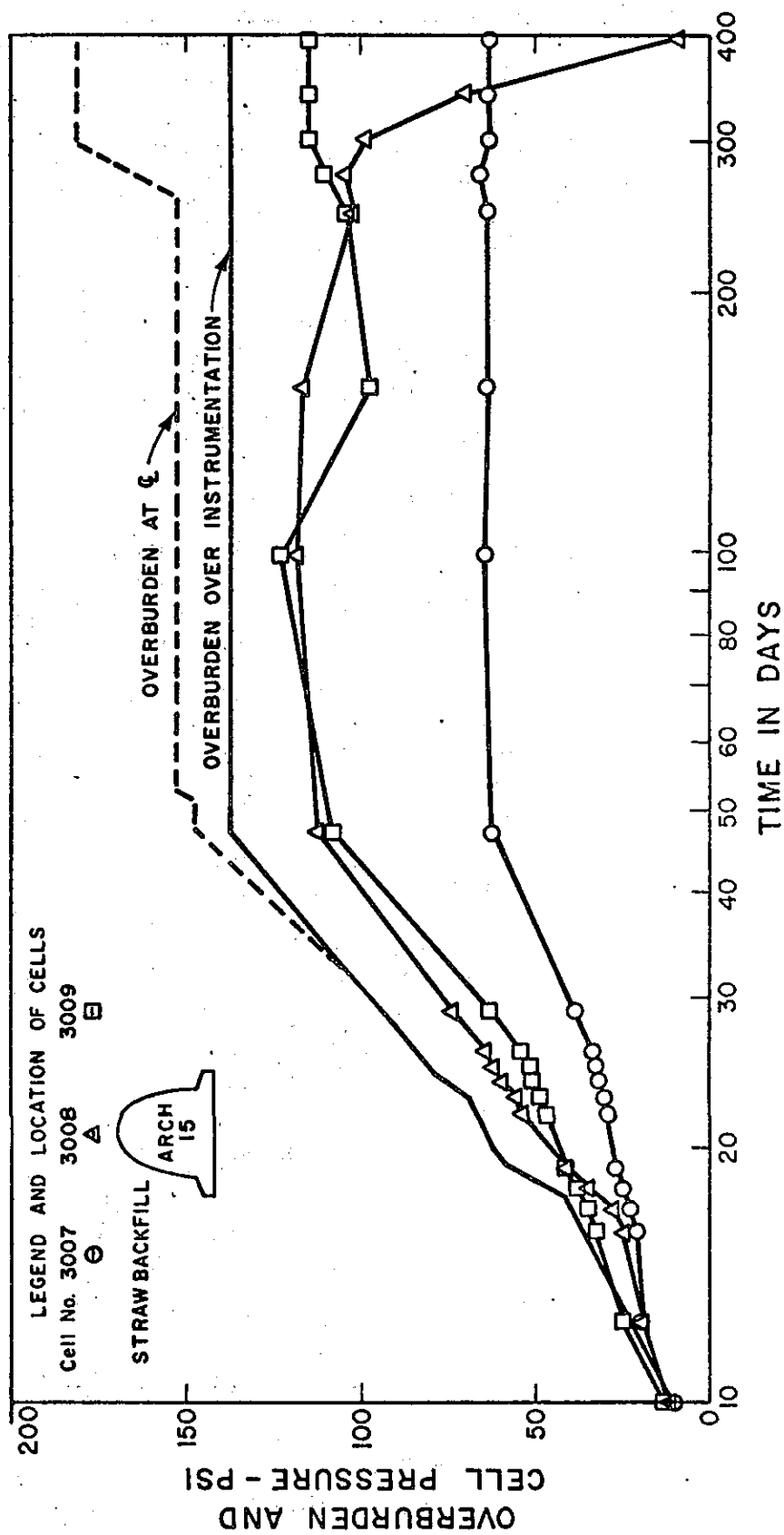

ClibPDF - www.fastio.com

Figure 21

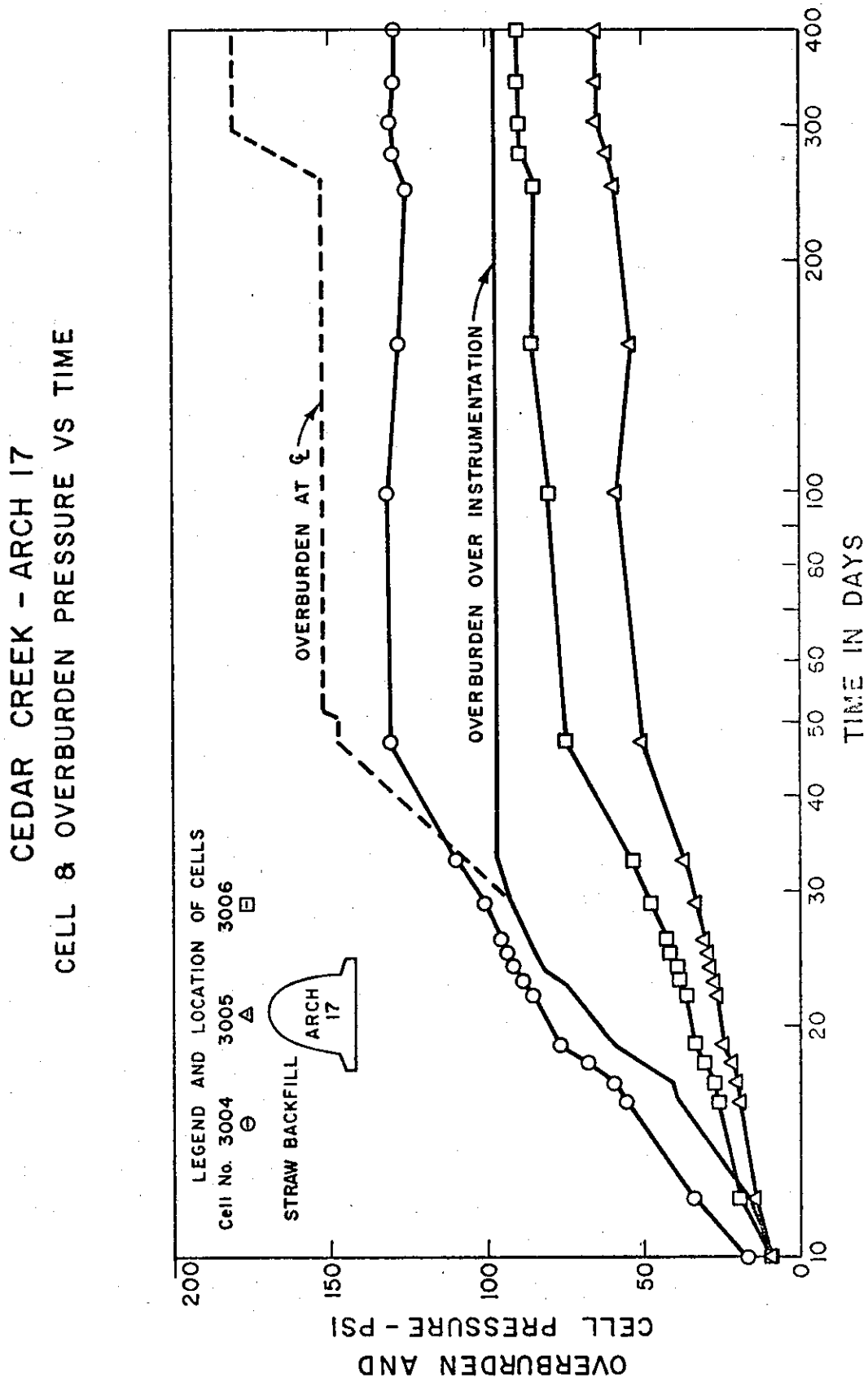

ClibPDF - www.fastio.com

Figure 22

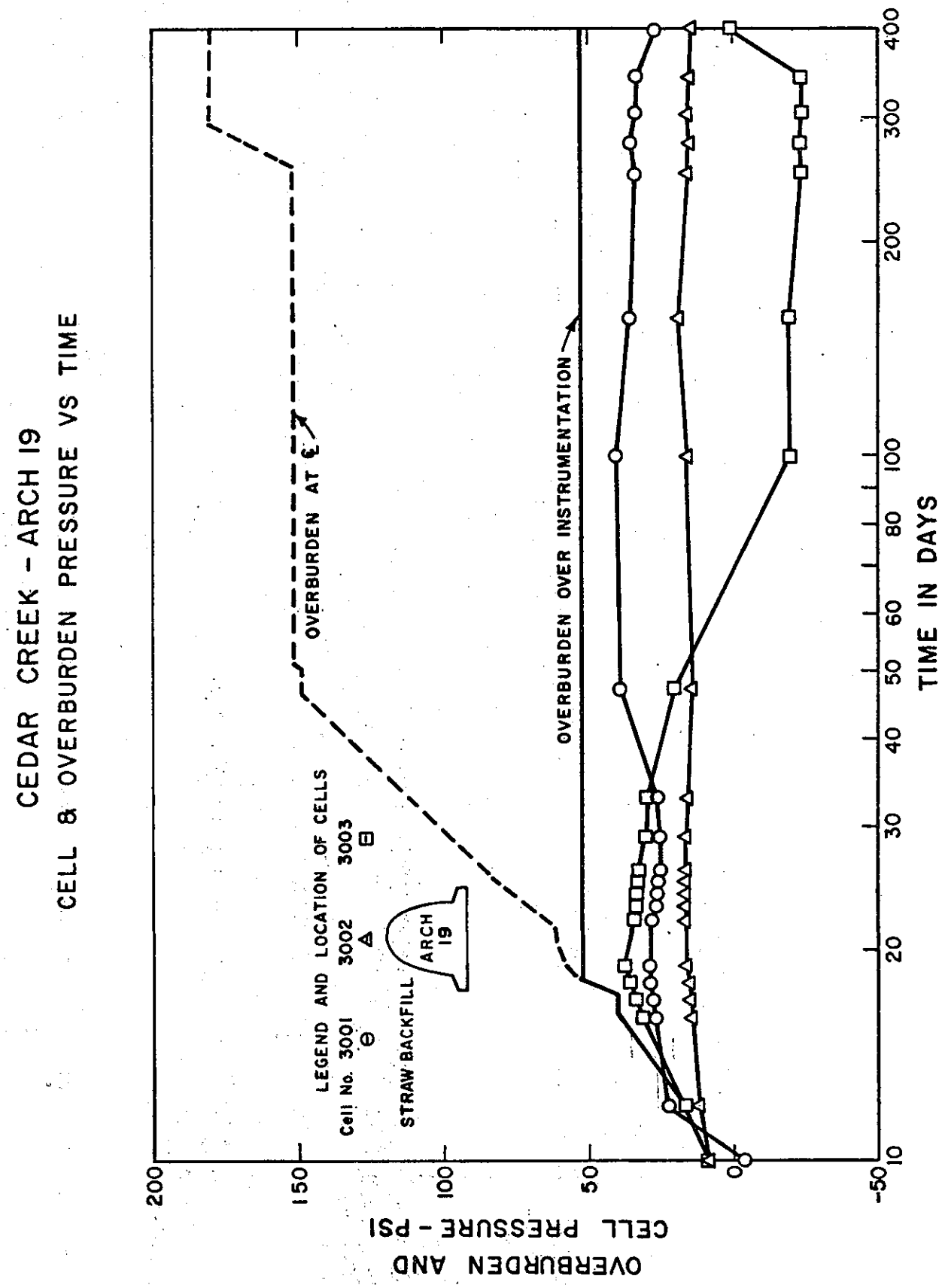

ClibPDF - www.fastio.com

Slightly erratic readings were obtained from several other cells, but results appear to reflect actual test conditions. As an example, pressure cell 508 (Fig. 15) indicates the soil stress at the crown of arch 8 to be significantly greater than the recorded soil stress immediately to the sides or at the crown of the adjacent arches 6 and 10. Since this cell responded quite well to the rise of the embankment, and transducer resistances were found to be normal, the readings are assumed to be accurate. Somewhat erratic readings were also evident with cells 3012 (Fig. 18), 3014 (Fig. 19) and 3009 (Fig. 20) after day 100. But due to similarity in the recorded data from these three adjacent cells, reliability in data was also assumed.

E. Jail Gulch Embankment

1. Site Description

Jail Gulch embankment was constructed as a portion of the realignment of Interstate Highway 5 in Siskiyou County about 8 miles North of Yreka, California (see Location Map, Figure 23). This embankment has a maximum centerline height of 200 feet and spans a V-shaped canyon. The lower toe of fill is approximately 270' below centerline. The floor of this canyon falls at grades varying from 10 to greater than 20 percent in a westerly direction (Fig. 24 and 25). A 60-inch x 788-foot long structural plate pipe (SPP) culvert, was constructed under this fill.

The embankment material consists of hard, metamorphic rock from adjacent cuts. Because of the blasting methods used to presplit the rock slopes, and the hardness of the materials encountered, the fill material was very coarse-graded with little fine material to act as a binder (Fig. 26 and 27).

2. Installation

Figure 24 is an elevation view showing the instrumentation plane in Jail Gulch embankment. The number in parentheses following the pressure cell cluster identification indicates the number of cells installed at that site. A total of four 4-cell clusters, four 5-cell clusters and one 17-cell cluster was installed.

Except for Pressure Cell Cluster 4 (PCC-4) containing the 17 cells, each cell was installed to measure a direct stress vector different from the other cells in that cluster. In a 4-cell cluster, one cell each was installed to measure vertical stress, horizontal stress parallel to the instrumentation plane, horizontal stress normal to the instrumentation plane, and stress 45 degrees clockwise from the horizontal, in a direction parallel to the instrumentation plane. The purpose of the cell placed 45 degrees from the horizontal was to obtain data for calculation of the stress vectors for the major and minor principal stresses.

In a 5-cell cluster, the cells were installed to measure the same direct stress vectors as in a 4-cell cluster. The fifth cell was installed to measure the direct pressure 45 degrees counterclockwise from the horizontal in a direction parallel to the instrumentation plane. The data from this fifth cell was intended to provide redundancy for the calculation of the measured stresses in that plane.

ClibPDF - www.fastio.com

In Siskiyou County about 6 miles north of Yreka
between 0.5 mile north of Dry Gulch and 2.5 miles north of Route 96

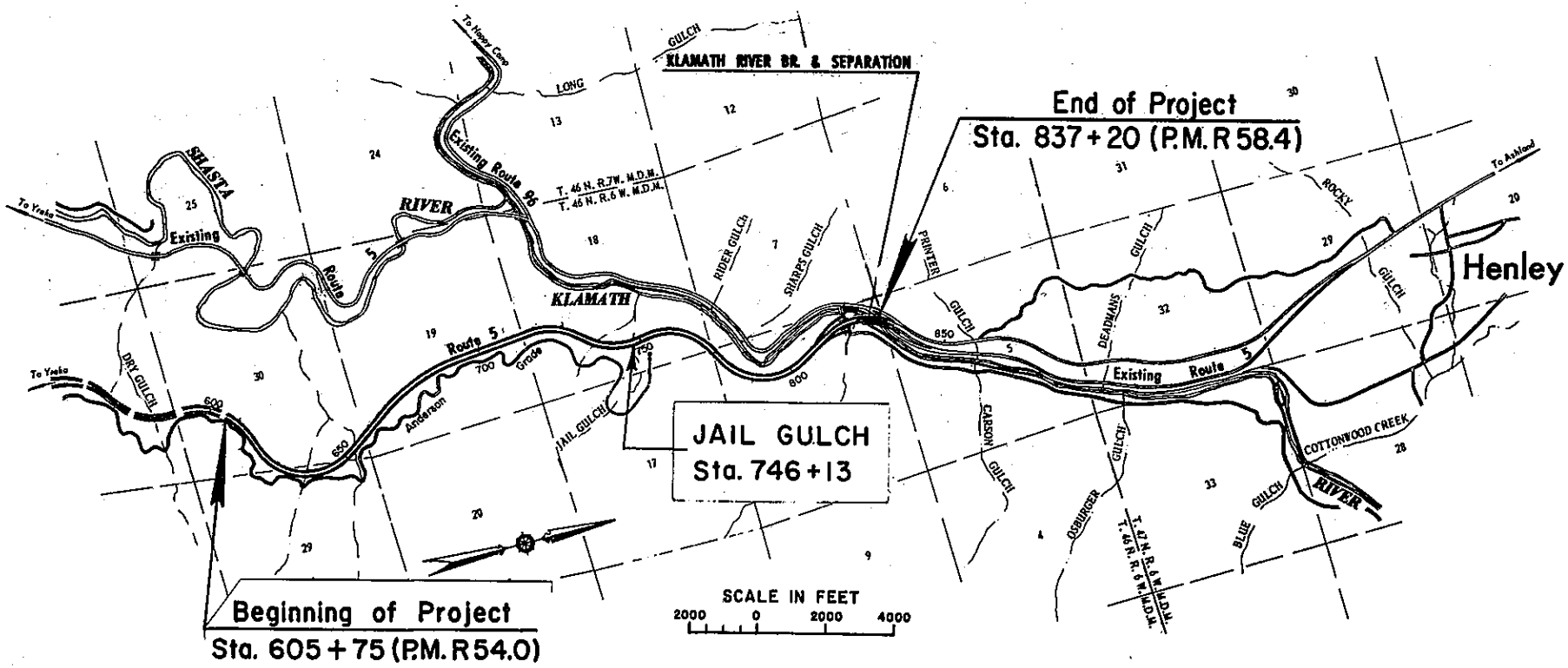

Figure 23

ClibPDF - www.fastio.com

Figure 24

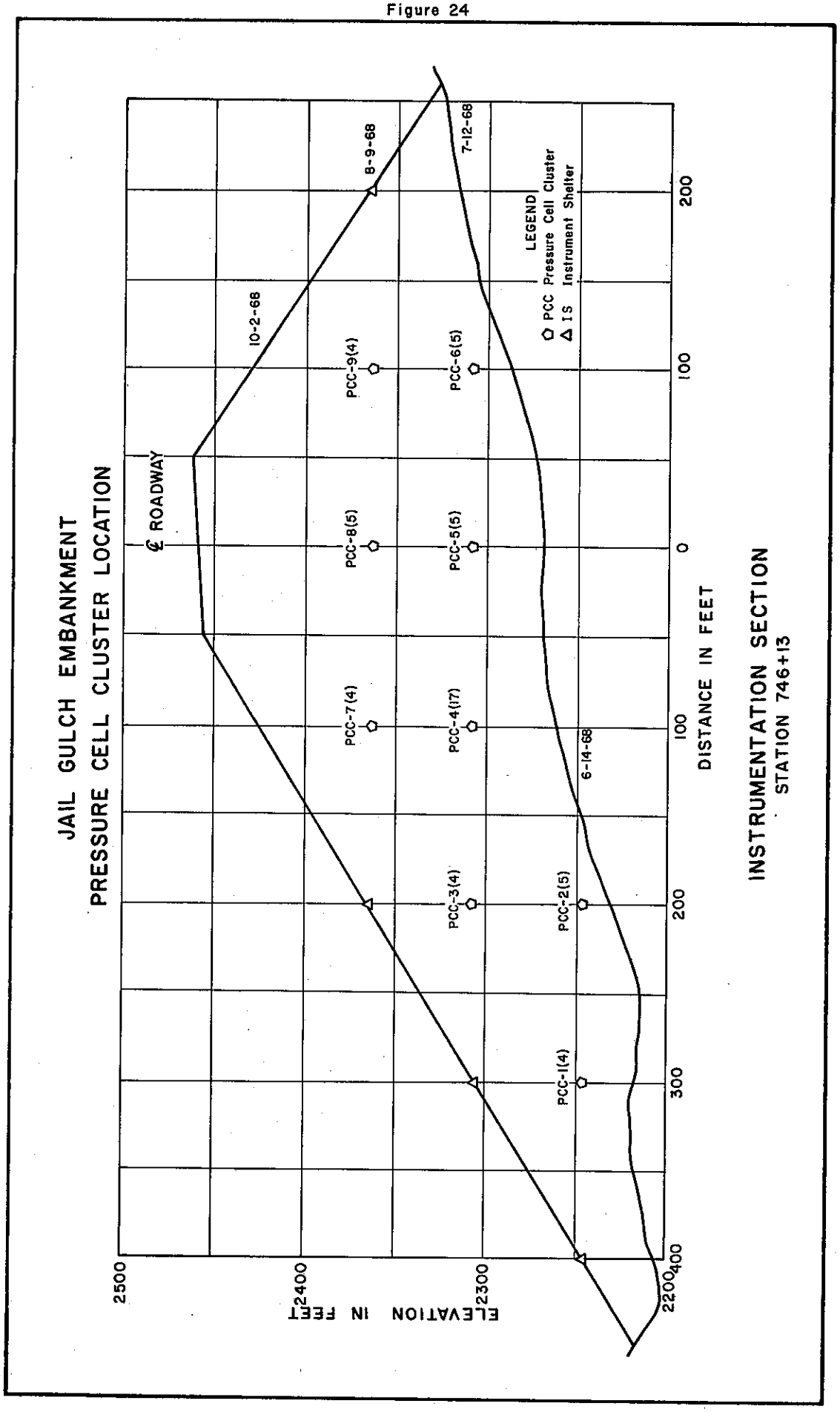

ClibPDF - www.fastio.com

Figure 25. View of Jail Gulch prior to embankment construction.

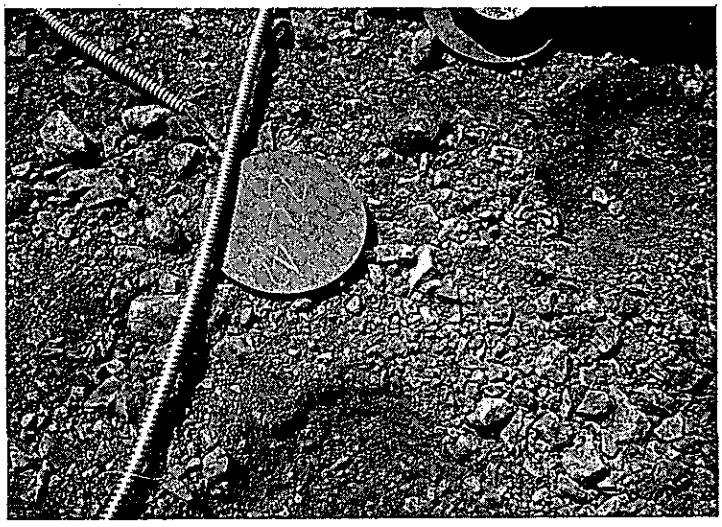

Figure 26. Soil texture of embankment material at Pressure Cell Cluster 1. Typical of material encountered at all instrumentation sites.

ClibPDF - www.fastio.com

Figure 27.
Instrumentation trench side wall. Note extremely rocky embankment material.

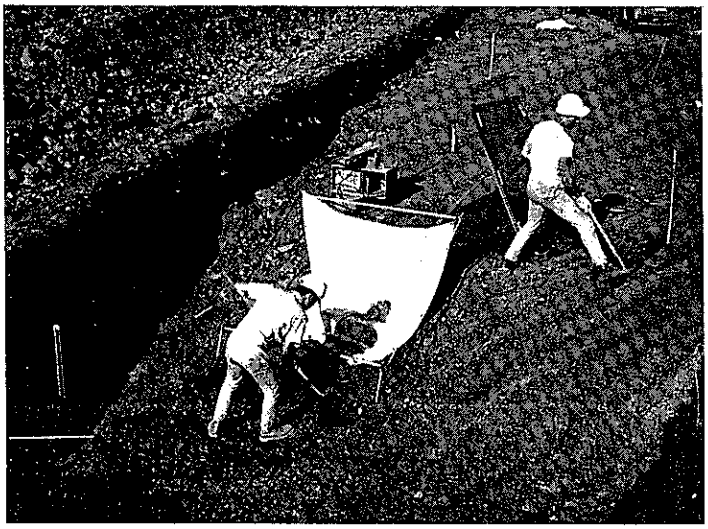

Figure 28.
Digging instrumentation pit.

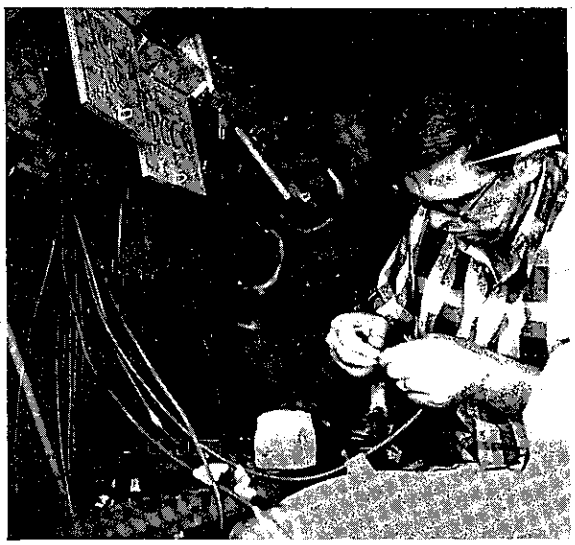

Figure 29.
Instrumentation shelter.

ClibPDF - www.fastio.com

In the 17 unit Pressure Cell Cluster Number 4, three different bedding materials were used around cells measuring the vertical stress and the horizontal stress. These bedding materials consisted of (1) embankment material passing the No. 4 sieve (same material that was used to bed all other pressure cells on this project), (2) concrete sand, and (3) clay obtained from a creek bed on the project. Duplicating cells were installed for each cell orientation for a total of 12 cells. The remaining five cells were installed to determine the direct stress vectors in planes parallel and normal to the instrumentation plane. The orientation of these cells was the same as that described for a 5-cell cluster.

Site preparation for each cell cluster was accomplished after a trench was excavated for the other instrumentation. A level area, large enough to accommodate all of the cells in the cluster when placed at 28 inches center to center, was excavated to a depth of three feet. The sides of this area were cut to a 6:1 slope, including the side adjacent to the edge of the trench. After the area was leveled and any projecting rocks removed, the surface was hand excavated to bed the 45° and vertically positioned cells. These excavations were made deep enough so that half the cell would be exposed after placing. Embankment fines (material passing the No. 4 sieve) were then compacted in place at the location of each pressure cell. After the cell was placed, additional embankment fines were hand compacted on and around each cell until the cell was encased with approximately one inch of material. Six inches of material passing a 3/4-inch sieve was then hand compacted around the cells, followed by placement of two feet of embankment material which was compacted using a hand-guided impact compactor. Because of the rocky nature of the embankment, it was necessary to compact a layer of selected material over some of the sites before preparing the site for the pressure cells. Photograph Figure 28 shows a typical pressure cell cluster being installed adjacent to the instrumentation line.

Lead wires from each of the pressure cells were encased in flexible metal conduit to the instrumentation trench. Within the trench to the instrument shelter located on the slope face of the embankment, the cables were encased in polyvinyl chloride pipe with slip joints every 40 feet. After installation of the pressure cell cluster, the wire leads were tinned and identified at the instrument shelter, as shown in Photograph Figure 29, and the initial readings were taken prior to backfilling the site.

Pressure cells at the 2250 elevation were installed on June 13 and 14, 1968, followed by installations at the 2300 and 2350 elevations during July and August, respectively, of the same year.

Other than tinning the pressure cell lead wires and encasing all leads of a cluster in a wooden box mounted in the instrument shelter, no other protection was provided to protect the lead wire terminals from ambient conditions. It has subsequently been found that excessive and prolonged humidity may have caused high resistance shorts across the lead wires, affecting the readings.

ClibPDF - www.fastio.com

3. Data Collection

Initially, all readings and calibrations of pressure cells on this project were obtained with a "Budd" strain gage indicator. Soon after the initial pressure cell installations were completed, however, the "Budd" indicator was urgently needed on another going project. It was necessary, therefore, to obtain several subsequent readings with a Strainsert strain gauge indicator. When the Budd indicator was again available, a set of readings was taken using both instruments and the "zero" reading for the Strainsert indicator was calculated,

To date, five sets of readings have been taken using both the "Budd" and "Strainsert" indicators. In general, comparisons of these readings revealed a difference of about 10%. Because the behavior patterns from these comparative readings were somewhat random in nature, it was concluded that the primary cause for these discrepancies may have been an interaction effect between the reading instruments and the pressure cells.

During the November, 1969, readings, the "Strainsert" indicator zero was determined by reversing the signal leads to the indicator for several of the pressure cells. The "indicator zero," which should remain constant regardless of indicated strain, is the average of the two readings obtained. It was found, however, that the "indicator zero," when determined on four cells on the 2300 elevation level averaged 20 micro inches less than the "indicator zero" when determined on seven cells on the 2250 and 2350 elevation levels.

4. Analysis

Because of the rocky nature of the embankment material used on this project, it was expected that arching would occur, leading to considerable differences between actual and theoretical pressures. Therefore, regardless of the magnitude of stress indicated, the performance of each cell was evaluated primarily on the consistency of data collected. On this basis, it appears that 19 of the 53 cells installed on this project are definitely not functioning properly, while 13 are indicating excessive pressure drop. This leaves 21 cells that are providing acceptable data. Failure of five of the defective cells was attributed to broken lead wires, poor electrical continuity, or low resistance to ground. The cause of failure for the other cells could not be determined. It is interesting to note that 13 of the malfunctioning cells that appeared to function properly for a short time after installation now indicate negative stress.

Because of incomplete or questionable stress data obtained from most of the pressure cell sites, complete data reduction for the determination of the magnitude and direction of major and minor principal stresses could be calculated for Sites 1, 2 and 8 only. Time plots of these values are shown in Figures 30 to 32. Because of probable malfunction of at least one cell at Site 2 (Figure 31), the reduced data after 300 days is questionable. It will be noted that the broken curves in these figures indicate discrepancies due to differences in readings between the Strainsert and Budd indicators. Generally, only data from the Strainsert readings were considered after day 100.

ClibPDF - www.fastio.com

Figure 30

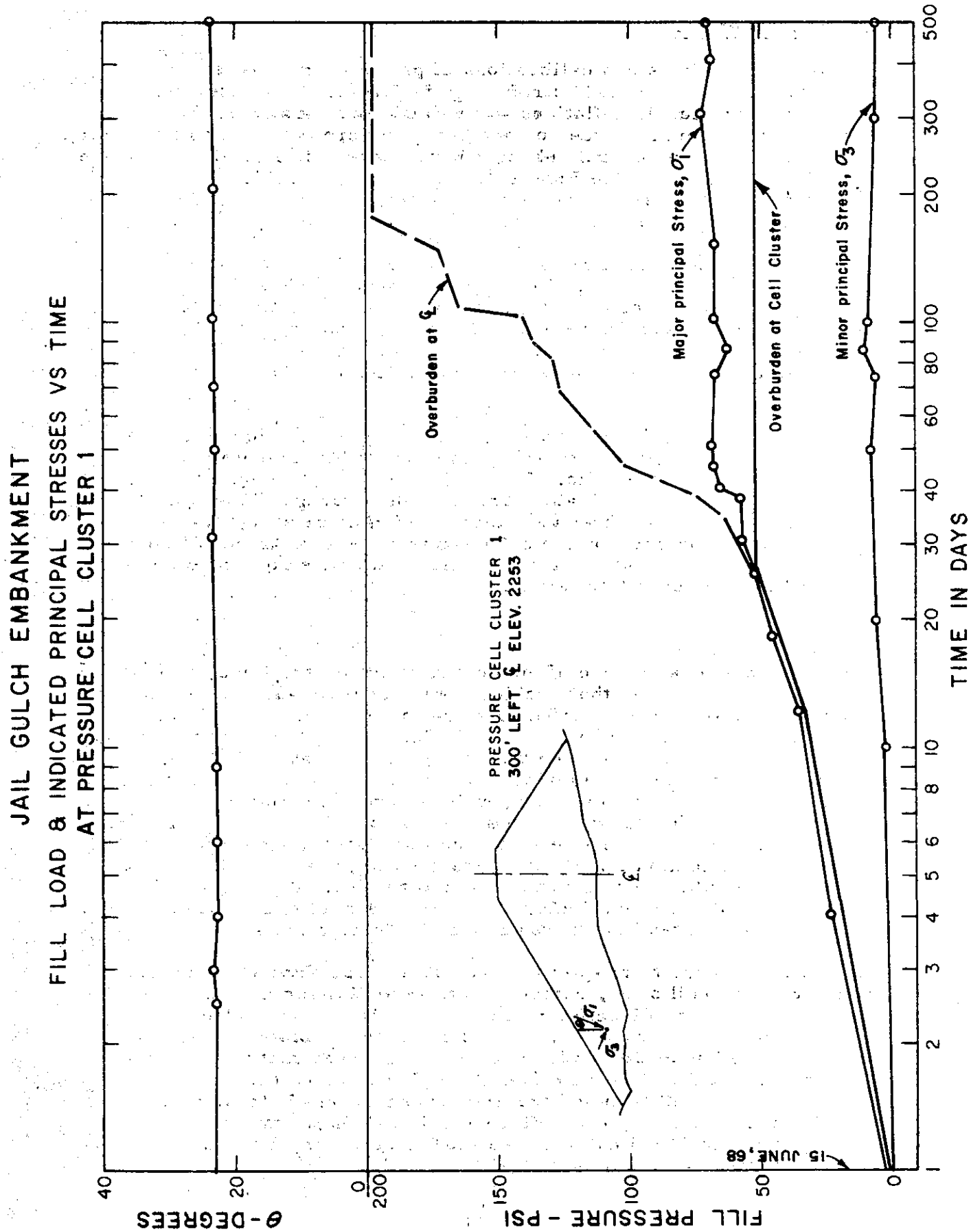

ClibPDF - www.fastio.com

Figure 31

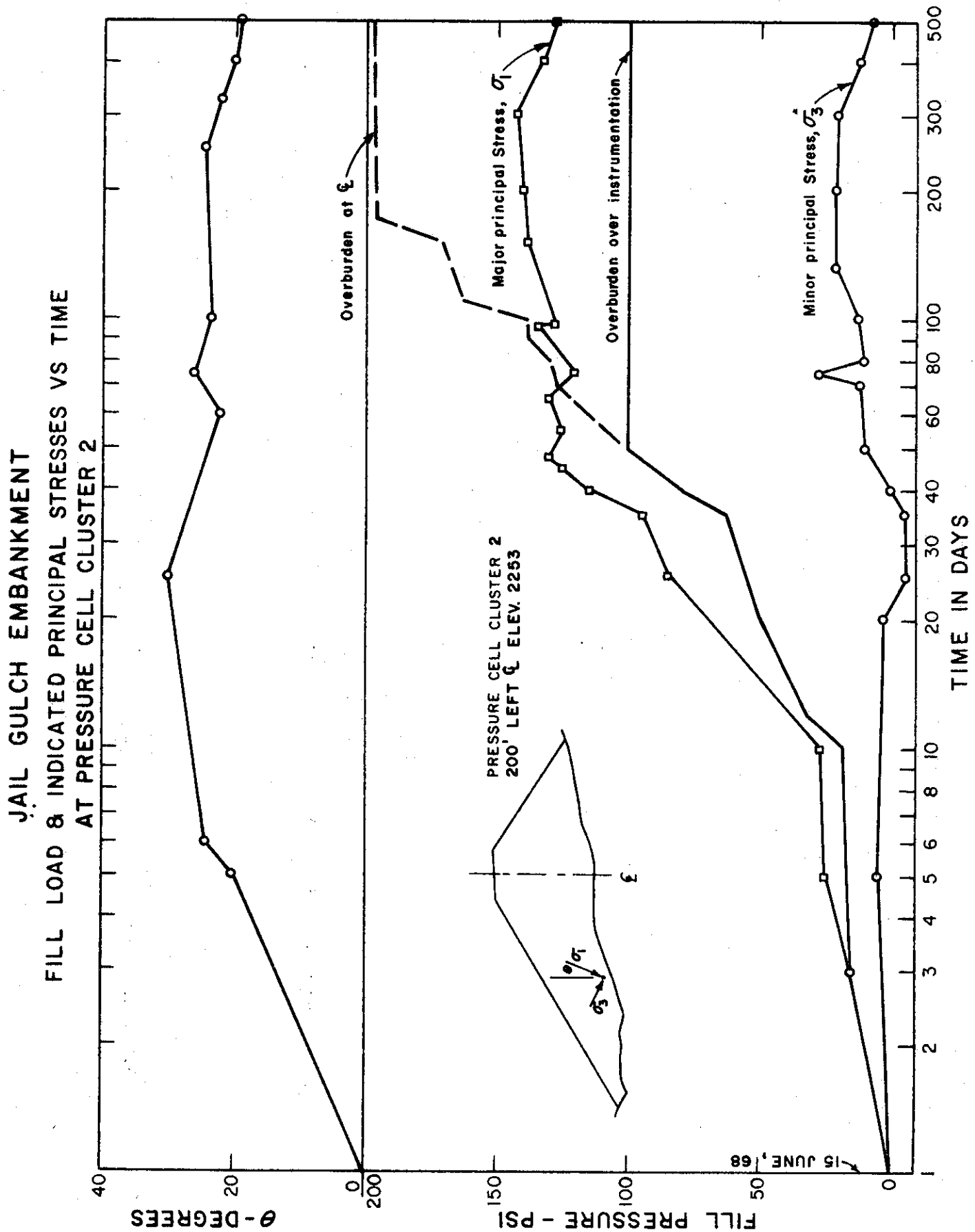

ClibPDF - www.fastio.com

Figure 32

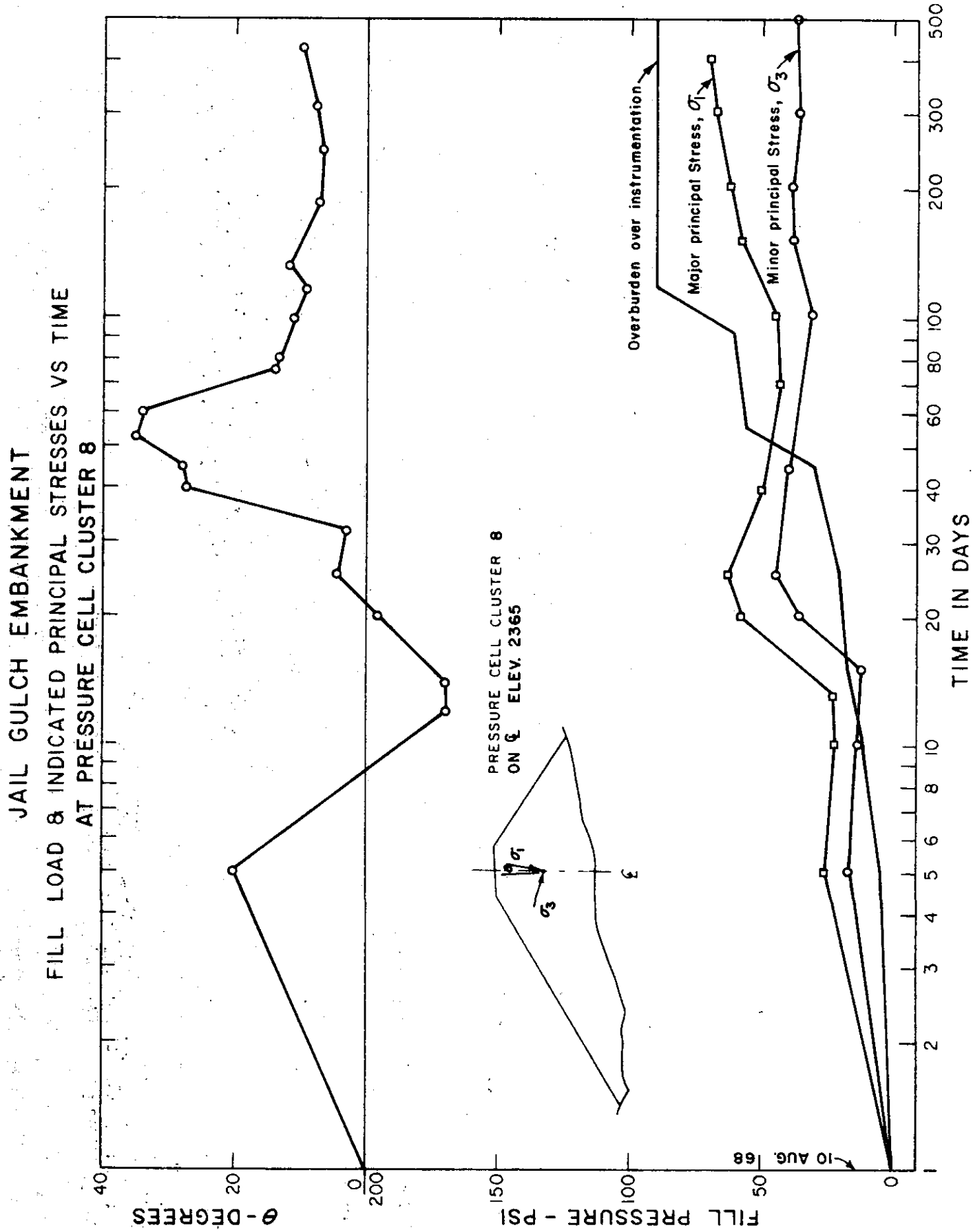

ClibPDF - www.fastio.com

Figure 33

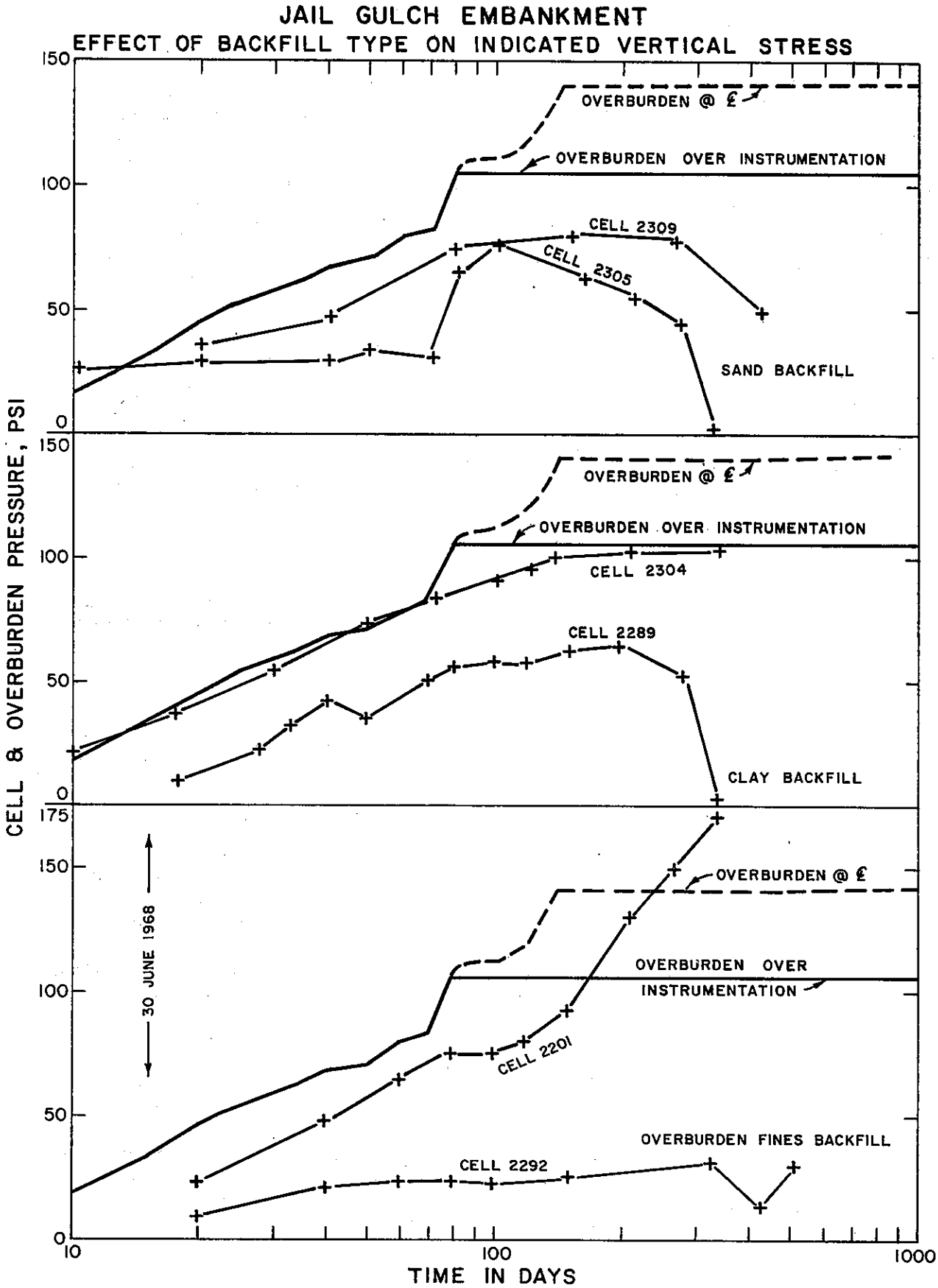

ClibPDF - www.fastio.com

With the exception noted previously, the data shown on these three figures appears reasonable, indicating that these soil cells are functioning properly. Unfortunately, the failure of one cell in a group could, and did, prevent reduction of data at the other sites.

Figure 33 shows the time plot of pressure cell response for each of the three types of bedding material. As can be seen from this figure, no conclusions can be made concerning the effect of backfill on the accuracy or reliability of data obtained. Of the two vertical cells installed in the sand backfill, one shows definite cell failure at approximately day 200, and the other cell appears to have developed a leak in the hydraulic system sometime after day 300.

Curves developed from the data of one cell in clay backfill and one in sand backfill were very similar. Both of these cells recorded approximately the same maximum stress before failing in almost identical patterns. Since these two cells were installed adjacent to each other, failure may have been caused by localized stresses in the embankment. It appears that accurate and consistent data are being obtained from the other pressure cells installed in clay backfill at this location.

The exceptionally high and increasing stress indicated by one of the cells in embankment fines backfill was caused by an electrical short between the lead wires and ground. It is assumed that arching action is the cause of the low stress readings obtained from the other cell in this backfill material.

F. General Evaluation

The amount of usable data compared to the number of pressure cells installed at Jail Gulch is somewhat disappointing. It is felt, however, that the harsh environment in which these cells were placed had considerable influence on the reliability and amount of data being obtained.

Several factors must be considered when comparing the performance of the pressure cells used at Jail Gulch and at Cedar Creek. The cells installed at these two locations were subject to considerably different environmental conditions. The hard, crushed rock encountered in Jail Gulch Embankment may have caused local stresses of such magnitude to either shear the transducer housing from the pressure sensing element or damage the cable containing the lead wires from the transducer element to the reading location.

The pressure cells used at Cedar Creek were subjected to 33 days of sustained full load prior to installation while those used at Jail Gulch were tested for only seven days. Of the 50 cells tested for Cedar Creek, 17 had excessive drift and were returned to the manufacturer for repair. It is felt that a smaller number of cell failures would have occurred if the pressure cells used at Jail Gulch had been tested similarly.

ClibPDF - www.fastio.com

The methods of protecting cell lead wires from adverse environment conditions (corrosion, moisture, and mechanical damage), particularly at the reading terminals may have had some bearing on the indicated performance of those pressure cells installed at Jail Gulch. Although there is no conclusive evidence that cell lead wire protection at Jail Gulch was inadequate or affected the accuracy of data collected, there is little doubt that the terminal plugs used at Cedar Creek provided better protection for the lead wires than the minimal protection provided at Jail Gulch.

The alternate usage or replacement of readout devices also may have had an undesirable affect on the value of data collected from pressure cells installed on this project. Comparisons of results obtained from simultaneous readings using the "Budd" and "Strainsert" strain gage indicators indicate small but unacceptable variations between the two units.

ClibPDF - www.fastio.com

BIBLIOGRAPHY

(1) Davis, R. E., "Structural Behavior of a Reinforced Concrete Arch Culvert", State of California, Department of Public Works, Division of Highways, Bridge Department, Research Report SSR 3-66, September 1966.

(2) Davis, R. E., and Patterson, L. R., "Structural Behavior of a Reinforced Concrete Arch Culvert: Phase 2 - Posey Canyon," State of California, Department of Public Works, Division of Highways, Bridge Department. Research Report SSR 2-68, September 1968.

(3) Davis, R. E., "Structural Behavior of a Flexible Metal Culvert Under a Deep Earth Embankment, Using Method B (Baled Straw) Backfill," State of California, Department of Public Works, Division of Highways, Bridge Department, Research Report R & D No. 4-69, October 1969.

(4) Smith, T. W., et al, "Evaluation of Commercial Soil Pressure Cells," State of California, Department of Public Works, Division of Highways, Materials and Research Department. Research Report 636342, May 1968.

(5) Standard Specifications, State of California, Department of Public Works, Division of Highways, July, 1964.

ClibPDF - www.fastio.com

APPENDIX A
SPECIFICATION NO. 1

SOIL PRESSURE STRESS METER

Specifications

The soil pressure stress meter shall consist of three parts: (1) the load sensing unit, (2) the pressure transducer unit and (3) pressure readout device.

The load sensing unit shall consist of two rigid metal plates separated by an incompressible fluid. The interior surfaces, of the plates making up the unit, shall be polished. The metal plates shall be of reduced section, where fastened together at the outer circumference. The space (or notch) left by the relieving operation shall be filled with a soft pliable material. The space between the plates shall be completely filled with the incompressible fluid. The criterion to be used to determine when this space is deaired will be that the maximum deflection of the load sensing unit under rated load shall be 0.003 inches. The fluid used shall be so constituted as to not retain any air and not be corrosive to the sensing or transducer unit elements. The load sensing unit shall have an effective diameter between 10 and 15 inches and a diameter-thickness ratio in excess of 15.

The pressure transducer unit shall be attached directly to one of the plates of the load sensing unit. If a pressure transducer housing is necessary, then it shall not be more than 2 inches in diameter and extend more than 2 inches beyond the surface of the plate. The pressure transducer housing shall be capable of withstanding a total shear force of 15 times the rated capacity in psi of the stress meter (15X rated psi). The pressure transducer unit shall be stable and moisture proof. It shall operate without zero drift exceeding two percent for a period of five years when the rated load is applied. The zero reading shall be stable to two (2) percent of the full cell range when loaded to full capacity and unloaded to no loading and the shift shall be of a random nature. The zero reading shall not change more than three (3) percent of full cell range with a temperature change of twenty (20) degrees Fahrenheit. The pressure transducer unit may be of either the electronic or fluid type. The pressure transducer unit shall be capable of measuring the pressure on the load sensing unit within one percent of rated load.

If the pressure transducer unit is of the electronic type, each cell shall come equipped with 50 feet of cable and so designed that up to 500 feet of cable can be added. The electrical cable used shall conform to the following: stranded copper, rubber or plastic insulated, cabled with fiber fillers, rubber or plastic jacket with fabric reinforcing and the cable ends must be water proofed. Stress relief devices (Kellems or equal) must be

ClibPDF - www.fastio.com

provided at the cable connection with the pressure transducer. The cable shall lead out the side of the cell.

If the pressure transducer is of the fluid type, tubing, of sufficient strength to withstand the rated load, shall be furnished in 500-foot rolls of equivalent length to two 50-foot lengths per cell. The connectors for the tubing shall lead out the side of the cell.

The following tests will be performed on the pressure cells prior to acceptance:

1. Calibrate the pressure cells by loading to full range three times to flex the cell; load the cell and take readings, at zero, three intermediate loads, and full rated load; repeat loading and readings three times. All repeat calibrations shall be within ± one (1) percent of the average at each load. The calibration will be performed with the pressure cell between wooden blocks, and with a load applied using a spherical bearing block.

2. Hold pressure cell, at zero load, at a given temperature for at least one hour and determine the zero reading. Change the cell temperature twenty (20) degrees Fahrenheit and hold at this temperature for at least one hour and determine zero reading. The zero reading shall not change in excess of three (3) percent of full load range.

3. Place the cell under full rated load for at least one week, at constant temperature ± three (3) degrees Fahrenheit, and read daily. Place cell under zero load for at least one week at constant temperature ± three (3) degrees Fahrenheit, and read daily. There shall not be a drift in readings in excess of one (1) percent of full load range.

4. Place pressure cells and cables in an outdoor water bath of sufficient depth that the cell is covered by at least six (6) inches of water. Read cell daily. There shall not be a drift in reading in excess of one (1) percent of full load range.

The readout device shall be of sufficiently rugged construction for field use and shall be contained in a portable instrument case. The instrument shall be capable of reading the measurement transmitted from the pressure cell within one (1) percent of the rated load of the cell and have a sensitivity of one-half (½) percent of the rated load of the cell. The readout device shall be stable and not show a zero shift of more than two (2) percent of the scale range over a temperature range of 40 to 110°F. The device shall be capable of reading pressure cell measurements with leads ranging in length from fifty (50) to five hundred (500) feet in length. The pressure readout device shall be provided with a self-contained power supply.

ClibPDF - www.fastio.com

The bid price is to include one complete soil pressure stress meter with 50 feet of cable, or fluid lines. A calibration is to be supplied with each stress meter, using 50 feet of cable or fluid lines. The calibration is to consist of at least five points relating pressure to the pressure transducer reading over the full range of the sensing unit. A set of drawings are to be submitted with the bid and will be used to determine if the stress meter is acceptable. The plans and related material, submitted with the bid, will be reviewed by the Materials and Research Department of the California Division of Highways. The lowest bidder, to furnish an acceptable stress meter will then be awarded the contract. Delivery date is to be on or before December 1, 1967.

ClibPDF - www.fastio.com

ClibPDF - www.fastio.com

APPENDIX B
SPECIFICATION NO. 2

CONCRETE-SOIL INTERFACE PRESSURE STRESS METER

Specifications

The soil pressure stress meter shall consist of three parts: (1) the load sensing unit, (2) the pressure transducer unit and (3) pressure readout device.

The load sensing unit shall consist of two rigid metal plates separated by an incompressible fluid. The interior surfaces, of the plates making up the unit, shall be polished. The metal plates shall be of reduced section, where fastened together at the outer circumference. The space (or notch) left by the relieving operation shall be filled with a soft pliable material. The space between the plates shall be completely filled with the incompressible fluid. The criterion to be used to determine when this space is deaired will be that the maximum deflection of the load sensing unit under rated load shall be 0.003 inches. The fluid used shall be so constituted as to not retain any air and not be corrosive to the sensing or transducer unit elements. The load sensing unit shall have an effective diameter between 6 and 7 inches and a diameter-thickness ratio in excess of 10.

The pressure transducer unit shall be attached directly to one of the plates of the load sensing unit. If a pressure transducer housing is necessary, then it shall not be more than 2 inches in diameter and extend more than 6 inches beyond the surface of the plate. The pressure transducer housing shall be capable of withstanding a total shear force of 15 times the rated capacity in psi of the stress meter (15X rated psi). The pressure transducer unit shall be stable and moisture proof. It shall operate without zero drift exceeding two percent for a period of five years when the rated load is applied. The zero reading shall be stable to two (2) percent of the full cell range when loaded to full capacity and unloaded to no loading and the shift shall be of a random nature. The zero reading shall not change more than three (3) percent of full cell range with a temperature change of twenty (20) degrees Fahrenheit. The pressure transducer unit may be of either the electronic or fluid type. The pressure transducer unit shall be capable of measuring the pressure on the load sensing unit within one percent of rated load.

ClibPDF - www.fastio.com

If the pressure transducer unit is of the electronic type, each cell shall come equipped with 25 feet of cable and so designed that up to 500 feet of cable can be added. The electrical cable used shall conform to the following: stranded copper, rubber or plastic insulated, cabled with fiber fillers, rubber or plastic jacket with fabric reinforcing and the cable ends must be water proofed. Stress relief devices (Kellems or equal) must be provided at the cable connection with the pressure transducer. The cable shall lead out the center of the back of the cell.

If the pressure transducer is of the fluid type, tubing, of sufficient strength to withstand the rated load, shall be furnished in 500-foot rolls of equivalent length to two 25-foot lengths per cell. The connectors for the tubing shall lead out the center of the back of the cell.

The following tests will be performed on the pressure cells prior to acceptance:

1. Calibrate the pressure cells by loading to full range three times to flex the cell; load the cell and take readings, at zero, three intermediate loads, and full rated load; repeat loading and readings three times. All repeat calibrations shall be within ± one (1) percent of the average at each load. The calibration will be performed with the pressure cell between wooden blocks, and with a load applied using a spherical bearing block.

2. Hole pressure cell, at zero load, at a given temperature for at least one hour and determine the zero reading. Change the cell temperature twenty (20) degrees Fahrenheit and hold at this temperature for at least one hour and determine zero reading. The zero reading shall not change in excess of three (3) percent of full load range.

3. Place the cell under full rated load for at least one week, at constant temperature ± three (3) degrees Fahrenheit, and read daily. Place cell under zero load for at least one week at constant temperature ± three (3) degrees Fahrenheit, and read daily. There shall not be a drift in readings in excess of one (1) percent of full load range.

4. Place pressure cells and cables in an outdoor water bath of sufficient depth that the cell is covered by at least six (6) inches of water. Read cell daily. There shall not be a drift in reading in excess of one (1) percent of full load range.

The readout device shall be of sufficiently rugged construction for field use and shall be contained in a portable instrument case. The instrument shall be capable of reading the measurement transmitted from the pressure cell within one (1) percent of the rated load of the cell and have a sensitivity of one-half (½) percent of the rated load of the cell. The readout device shall be stable and not show a zero

ClibPDF - www.fastio.com

shift of more than two (2) percent of the scale range over a temperature range of 40 to 110°F. The device shall be capable of reading pressure cell measurements with leads ranging in length from twenty-five (25) to five hundred (500) feet in length. The pressure readout device shall be provided with a self-contained power supply.

A calibration is to be supplied with each stress meter, using 25 feet of cable or fluid lines. The calibration is to consist of at least five points relating pressure to the pressure transducer reading over the full range of the sensing unit. A set of drawings are to be submitted with the bid and will be used to determine if the stress meter is acceptable. The plans and related material, submitted with the bid, will be reviewed by the Materials and Research Department of the California Division of Highways. The lowest bidder to furnish an acceptable stress meter and compatible readout in a combined bid will then be awarded the contract. Delivery date is to be on or before October 1, 1967.

ClibPDF - www.fastio.com

ClibPDF - www.fastio.com