STATE OF CALIFORNIA
BUSINESS AND TRANSPORTATION AGENCY
DEPARTMENT OF PUBLIC WORKS
DIVISION OF HIGHWAYS

AN EVALUATION OF SEVEN FLEXIBLE PORTABLE DELINEATORS

71-05

ClibPDF - www.fastio.com

ClibPDF - www.fastio.com

STATE OF CALIFORNIA—TRANSPORTATION AGENCY

RONALD REAGAN, Governor

DEPARTMENT OF PUBLIC WORKS
DIVISION OF HIGHWAYS
MATERIALS AND RESEARCH DEPARTMENT
5900 FOLSOM BLVD., SACRAMENTO 95819

June 1971
Interim Report
M&R No. 646317

Mr. J. A. Legarra
State Highway Engineer

Dear Sir:

Submitted for your consideration is a report of:

AN EVALUATION OF

SEVEN FLEXIBLE PORTABLE DELINEATORS

Principal Investigator

Eric F. Nordlin

Co-Principal Investigator

J. R. Stoker

Assisted By

B. G. Page and C. M. Simpson

Very truly yours,

JOHN L. BEATON
Materials and Research Engineer

ClibPDF - www.fastio.com

ClibPDF - www.fastio.com

ABSTRACT

REFERENCE: Nordlin, E. F., Stoker, J. R., Page, B. G., and Simpson, C. M., "An Evaluation of Seven Flexible Portable Delineators", State of California, Department of Public Works, Division of Highways, Materials and Research Department. Interim Report 646317 dated June 1971.

ABSTRACT: This is a report on the vehicle impact testing of flexible or collapsible portable delineators for traffic control. These delineators could be used for construction zones, ends of freeways, or any other temporary traffic zones.

The basic criteria for these delineators are that they have sufficient rigidity to remain upright when unattended, but are either flexible or collapsible when impacted by a vehicle. Ideally, they would remain functional after vehicle impact and would provide a safe nondamaging guidance system. The minimum requirements for day and night visibility as specified in Section 7-1.093 of the 1971 Standard Specifications are a height of 37 inches, a post width of 2-3/4 inch or a cross sectional area of 100 square inches, a brilliant orange or orange and white color combination, and reflectorization provided by two 3¼-inch amber reflectors.

Using this criteria for evaluation, seven different delineators were tested with vehicle impacts at speeds from 10 to 60 mph. These posts are representative of currently manufactured products.

All delineators tested provided a safety improvement over nonflexing rigid devices which have been used in the past. None of the delineators tested did any damage to or provide any redirection of the test vehicle. Impact life varied from one to twenty hits and was dependent on the design of the delineator.

KEY WORDS: Delineator/Traffic, impact tests, portable, posts, safety devices, traffic control devices, traffic diversion, traffic safety.

ClibPDF - www.fastio.com

ClibPDF - www.fastio.com

TABLE OF CONTENTS

	Page
ABSTRACT	
INTRODUCTION	1
CONCLUSIONS	3
RECOMMENDATIONS	4
DISCUSSION	6
TEST PROCEDURES	15
EVALUATIONS	
D-300 Delineator	17
Flex-A-Lite Post	20
Flexopost	22
Glo-Post	25
S. T. Flasher Delineator	28
Traf-Flex Post	31
Tri-Tix Cone	33
TABLE 1	35
TABLE 2	36
APPENDIX	
I Standard Specification 7-1.093	37
II Modification to Flexible Base	39
REFERENCES	40

ClibPDF - www.fastio.com

ClibPDF - www.fastio.com

INTRODUCTION

Guiding the increasing volume of traffic safely through highway transition zones or construction areas has always been a problem. Flexible portable delineators, as defined in Section 7-1.093 of the 1971 Standard Specifications, are one essential means of defining the limits of the traveled way.

Generally, delineation systems that are located in active construction areas are capable of being continually observed and maintained. In these temporary locations delineators that are maintained in place by gravity may perform satisfactorily. Systems located away from active construction areas, such as semi-permanent lane closures on the end of a completed project, will be observed less frequently and anchored base delineators are then necessary. Therefore, a sound anchoring system and the ability of a delineator to withstand repeated vehicle impacts become important considerations for a safe, effective delineation system when used in these semi-permanent applications.

This investigation is primarily directed toward the semi-permanent application and is restricted to a flexible type portable delineator that is capable of returning to an upright position after impact by a vehicle. These delineators must provide satisfactory day and night visibility and they must be anchored in place for the semi-permanent application intended. Effective flexible delineators minimize vehicle damage on impact and provide a delineation system which requires minimal maintenance.

The potential advantages of this type of delineator were recognized by District 07 Traffic Department who requested that the Materials and Research Department evaluate one of these portable delineators. Subsequent to this request, discussion between the Materials and Research Department and others within the Division of Highways indicated a need for an evaluation of portable delineators currently available.

In an attempt to provide guidelines for selecting a suitable delineation system for specific traffic control problems, a testing program was developed to investigate the performance of portable delineators as well as their compliance with the 1971 Standard Specifications. The objectives of this project are to:

1. Evaluate those portable delineators which are currently available:

   a. By their compliance to the requirements of Standard Specification Section 7-1.093, dated January 1971, for color, height, target area, and reflectance.

   b. By their ability to sustain repeated vehicle impact and return to an upright position.

ClibPDF - www.fastio.com

2. Establish a tentative testing procedure for the testing of portable delineators in the future.

3. Furnish suggested guidelines for suitable application of the various types of portable delineators studied.

The effectiveness of a traffic control device is dependent on the motorist's ability to perceive it. Post visibility is rated by "target value" and "reflectance". Target value is the visible surface area perpendicular to the line of sight and is essential to daytime visibility. Reflectance is the ability of a material to be seen at night by reflecting light from vehicle headlights. The physical requirements of portable delineators are regulated by California Standard Specification Section 7-1.093, dated January 1971. Briefly, this specification states:

> "Portable delineators, including the base, shall be composed of a material that has sufficient rigidity to remain upright when unattended and shall be either flexible or collapsible upon impact by a vehicle. The base shall be of such shape as to preclude roll after impact. The base shall be of sufficient weight or shall be anchored in a manner such that said delineator shall remain in an upright position.
>
> "The vertical portion of the portable delineators shall be of a brilliant orange, or orange and white color combination that will provide contrast with the background. The posts shall be a minimum of 2-3/4 inches in width or diameter or, if tapered, shall have a minimum cross-sectional area of 100 square inches, measured through the vertical axis of the delineator, normal to the roadway. The minimum height shall be 37 inches above the traveled way."

In addition, the specification requires that two 3¼-inch amber reflectors be mounted to the post to provide night visibility. The complete specification is shown in Appendix 1.

The effect of vehicle impact on the portable delineator was observed during dynamic testing. An evaluation was made on the ability of the post to resist fracture on impact, to return to its normal upright position after impact, and finally the ability of the anchor to hold the post in position.

The portable delineators tested were the D-300 Delineator, the Flex-A-Lite post, the Flexopost, the Glo-Post, the S. T. Flasher Delineator, the Traf-Flex post, and the Tri-Tix traffic cone. The costs of these delineators vary between $5 and $10 per unit. Since the price of a delineator can vary significantly with competitive bidding, the number of units purchased, and accessories which may be attached, etc., this aspect is not considered in this study.

ClibPDF - www.fastio.com

CONCLUSIONS

1. The two vehicles used to conduct the tests were not damaged or redirected on impact by any of the portable delineators tested.

2. Two of the delineator types tested performed satisfactorily at 60 mph impacts.

3. In general, the portable delineators tested will function as designed when anchored to the surface and struck at low speeds (30-40 mph). That is, they will flex when struck and return to an upright position after impact. The maximum functional impact speed for most of the delineators is 40 mph.

4. The materials used to fabricate the portable delineators are flexible, tough, and durable. With very few exceptions the individual parts were undamaged by impact testing. Failure generally occurred at the connection between the post and the base.

5. Reflectance essential for night visibility could not be maintained beyond the second impact. Most of the 3¼-inch reflector buttons were unusable after the first impact. The reflective sheeting that was wrapped around the post was about 20% less effective after the second impact, and after the fifth impact about 50% of the sheeting was removed.

6. For the short duration of the test, epoxy and butyl tape adhesives performed equally well for anchoring bases to the pavement surface. In most cases of failure, either the delineator would come apart or the aged asphalt surface would eventually peel. The advantage of butyl tape is the easy removal for temporary installations. However, highway construction and maintenance personnel have reported that epoxy should be used on fairly long term installations.

7. Damage will occur to the pavement surface when removing epoxied delineators. This can be overcome with the use of an asphalt sacrifice pad. The color contrast of this pad on PCC pavement provides additional delineation.

ClibPDF - www.fastio.com

RECOMMENDATIONS

It can be assumed that manufacturers will continue to upgrade their product either by new designs or materials to produce a safer, more reliable portable delineator. It is recommended that an impact test be performed on these new designs for qualification. The performance of the proposed unit should then be evaluated for the requirements of the job and unit costs compared to costs of previously tested acceptable delineators. For testing purposes, the base could be temporarily attached to an AC pavement for an evaluation by one or two vehicular impacts at the desired speed. Testing would be performed by the Materials and Research Department on sample delineators submitted for testing by the Resident Engineer.

It is recommended that Standard Specification 7-1.093 be revised so that it is less restrictive on the type of reflector which is to be attached to the portable delineator. The 3¼-inch reflex reflector buttons presently required by the specification are available only in an acrylic resin which fractures easily on impact. This reflector is not suitable for portable delineators in which the incidence of vehicular impacts is expected to be high, in spite of the fact that its reflectance is greater than other reflective materials currently available.

This revision could require some minimum area of approved reflective material normal to the driver's line of sight. The reflective area should be placed high enough on the post to be effective. The type of portable delineator <u>and</u> reflective material proposed for use on the project could then be submitted to the Engineer for approval.

The combination of the standard reflex reflector buttons and reflective sheeting material on the post is recommended because the reflective sheeting would be very desirable for added nighttime safety in case the buttons were removed or damaged by a vehicle or by vandalism.

It is also recommended that industry be encouraged to develop a reflector at a reasonable cost that is capable of resisting the shock of vehicular impact. Industry has made some progress in this direction with the production of a polycarbonate reflex reflector for automobile taillight lenses. This reflector is reported to be very durable and able to withstand repeated impacts. The reflectance of a polycarbonate reflex reflector is nearly equal to that for an acrylic resin reflex reflector but its cost is expected to be three times as great. It is the development of this type of reflector that is needed for use with portable delineators. Such development should also consider a theft-deterring attachment if the maintenance cost of the delineator system is to be kept at a minimum.

ClibPDF - www.fastio.com

Both of the in-service installations studied revealed some unique applications of delineators as well as some problem areas. Therefore, a coordinator, probably from the Construction Department, should accumulate and distribute both the creative developments and the pitfalls of delineation systems as the information becomes available.

ClibPDF - www.fastio.com

DISCUSSION

The discussion which follows is presented in a generalized way. The specific details of individual portable delineators is presented later in this report. The four subjects discussed are portable delineator features, dynamic testing, maintenance, and in-service installations.

A. The Delineator

A portable delineator may exhibit several features that may be unique to that device. The variables may be classified to (1) the type of anchor, (2) the type of base, (3) the post, and (4) the reflector. They are discussed independently below:

1. Types of Anchor

Several methods are available to attach the base of a delineator to the pavement surface, such as adhesive, lag bolts, power driven studs, etc. Subsurface anchors are also available for permanent installations. Adhesive attachments and subsurface anchors were the only types of anchors tested for this report.

Delineators without subsurface anchors were attached to the surface at the test site with butyl tape or epoxy adhesives. The costs for these adhesives are very nearly the same. Epoxy adhesive is more expensive initially, but butyl tape takes more time to apply.

Epoxy is recommended for long-term applications because of its higher strength when compared to other adhesives. No meaningful comparison of strength between butyl tape and epoxy could be made from the limited impact testing, since the asphalt or the delineator itself usually failed before the adhesive. Butyl tape would cause less damage to the surface when the delineator is removed, but is recommended only for short-term applications.

The only bond failures that occurred were associated with the "flexible base" type of delineator. Because of the design of this type of delineator, we recommend that for long-term installations this base be anchored with bolts or lag screws as shown in Appendix II. This technique is currently used on I-5 near Woodland by District 03.

Details of this installation and an installation utilizing a sacrifice pad are presented in Part D, In-Servive Installations of this report. The sacrifice pad of asphalt

ClibPDF - www.fastio.com

concrete has been used effectively on PCC pavements to facilitate the removal of delineators attached with epoxy.

Long-term or more permanent installations may justify the additional work required for placement and removal of a subsurface anchor. Subsurface anchors also have a limited application since the subsurface is not always accessible, as, for example, with a lane closure on a bridge deck.

Any portable delineator which has a subsurface anchor should have provisions for separating the post and anchor for replacement of a damaged post and for ultimate removal of the delineator.

Three different delineators tested utilized a below-the-surface anchor system, the Flex-A-Lite, the Flex-O-Post, and the Traf-Flex (see individual evaluations). The anchors for the Flex-A-Lite and the Traf-Flex delineators can be separated from the post for replacement or removal and are designed so that they may be pushed into the surface. The Flex-O-Post, however, is a single length of post which is anchored in a backfilled hole in the sub-grade.

Both compacted earth and rigid polyurethane foam were utilized successfully as backfill to anchor this delineator below the surface.

2. Base Types

The variety in design of the types of bases tested may be classified as anchored base, rigid base, and flexible base. The anchored base consists of a fixed subsurface anchor connected to a rigid post by a flexible connector. The flexible connector must provide the rotation necessary to return the rigid post to its upright position after impact. The flexible connectors tested were a coil spring and an elastic cord.

The rigid base type consisted of two distinctly different delineator designs. Both designs require that the entire rigid base be attached to the surface for a semi-permanent application. One design utilizes a rigid post and a flexible connection to the base, while the other utilizes just the opposite, a flexible post and a rigid connection to the base. Regardless of the method of flexing, rigid bases should be attached to the surface for an effective semi-permanent installation.

The third type is the flexible base which is rectangular in shape and has a post mounted into it eccentrically. The anchor is applied at the opposite end of the base from the post. The flexible base delineator is restricted to one-direction effectiveness for impact.

ClibPDF - www.fastio.com

3. Post Type

The types of posts can be classified as rigid or flexible. A flexible post delineator functions by bending of the post during impact whereas a rigid post system is dependent on the base or the post-to-base connection for flexibility.

The complexities of a well designed post are many and involve a consideration of such properties as: wall thickness, diameter or width, shape of the section, material composition, etc. in order for the post to operate properly on vehicle impact and in a wide variety of environmental conditions. For instance, if the post is too hard or rigid, it may shatter or cause damage to the striking vehicle. If the post is too plastic or flexible, it will not support its own weight, particularly at higher temperatures. Finally, all posts should be sufficiently tenacious at the bottom so that the post-to-base connection is not a point of weakness.

4. The Reflector

The reflectance of a portable delineator is provided by refraction (reflex) reflectors, external bead reflectors, or by bands of reflective sheeting. At this time none of the posts tested are committed to the exclusive use of one type of reflector. Any desired type of reflector or combination of reflectors may be attached to any post to fit the particular application.

The reflex reflector which is the most reflective is also the easiest to damage when placed on a flexible portable delineator. The majority of the reflex reflectors failed on the first vehicle impact. If they were not completely destroyed, they were cracked enough to be considered unreliable. (If cracked, moisture can enter between the reflective face and the backing plate and reduce reflectivity significantly.)

One variety of reflex button has a flange molded around its circumference. This flange is raised about 1/8-inch above the reflector face and provides some protection to the reflector. Limited testing indicates that this flange type is only slightly superior to the unflanged with respect to damage on impact.

The external bead reflector is composed of glass beads (1/8-inch "cat's eyes") molded into a 3-inch diameter pliable plastic backing. The advantage of this from the standpoint of vehicle impact is that it is more durable and does not crack as the more rigid reflex types. It is less reflective than the reflex reflector and some of the glass beads may crack on impact which would reduce the over-all reflectivity.

ClibPDF - www.fastio.com

The least reflective material of the three tested is internal lens reflective sheeting. Reflective sheeting has an adhesive back which holds it to the delineator. Three-inch to four-inch wide strips are attached to the delineator posts around their circumference which provides a reflective surface in every direction around the post parallel to line of sight.

After four to five impacts, the reflective sheeting is chipped and torn so that only about 50 percent remains effective as a reflector.

Night visibility will be difficult to maintain using any of the three reflective materials tested because of vehicular impacts. The best reflector considering both cost and reflecting ability is the reflex type specified in Standard Specification 7-1.093. The reflex type is, however, the easiest to damage. External bead reflectors and reflective sheeting are more resistant to impact damage but they are more costly than the reflex type. The reflex type can be viewed at greater distance but does not have the angularity of reflective sheeting.

Until a reflex button is developed at a reasonable cost which can take impact without fracture, it would be desirable to use a combination of reflex buttons with reflective sheeting. If the reflex button were destroyed with the first vehicle impact, the sheeting may provide delineation until the button can be replaced.

B. Dynamic Testing

Impact testing was conducted at the Division's test facility at Lincoln Airport using two 1968 Dodge sedans. Seven different types of portable delineators were anchored to the asphalt surface or embedded in soil and struck at various speeds until failure. A total of sixteen delineators were observed.

Failure was considered to have occurred when the device would no longer function effectively as a traffic delineator. Reasonable effort was taken to repair or aid each post to return to upright so that the maximum of information could be gained for evaluation. Impact speed was initially established at 60 mph for a severe test. This force proved to be too severe so the initial impact speed was reduced to 20 mph. Subsequent to the initial impact, speeds of 40 mph and 60 mph were used for each delineator.

C. Maintenance

Maintenance of a system will depend upon the location and length of service. A two-year lane closure for end of freeway delineation requires different considerations than delineation of a two-month lane closure for temporary rerouting of traffic. Surveillance of delineators for maintenance becomes part of the construction routine when delineators are located in an active construction area. A frequent surveillance program, however, is

ClibPDF - www.fastio.com

not practical for a long term installation. The long term use would require more permanent anchoring to the surface and maintenance would primarily be involved with maintaining reflectors for night visibility. With the short-term application, relocation of delineators unattached to the surface would probably require the most attention. Maintenance of reflectors, however, is deemed a serious problem regardless of the application. Vandalism is also of prime concern because it usually involves several delineators where impact damage would generally affect only one or two at a time.

D. In-Service Installations

Two installations were observed on I-5 in District 03. Both installations were "end of freeway" lane closures. One installation was located East of the City of Woodland, and the other in Sacramento just North of the I-80 interchange. Each location utilized a different type of portable delineator and both delineators were included among those tested by vehicle impact.

Sacramento Location

The Sacramento installation was about a mile in length and was used to close three southbound lanes onto the Q Street off ramp. The duration of this installation was about six months from the first part of July 1970 to mid January 1971.

This delineation system was placed on an asphalt sacrifice pad. The purpose of this pad was to prevent damage to the concrete surface when delineators are removed. The four foot wide pad was placed with a paving machine for the length of the closure section. A bond breaker was sprayed on the concrete surface before placement of the asphalt pad to facilitate removal of the asphalt when the section was opened to traffic.

The asphalt sacrifice pad provided a visual contrast with the grey concrete as well as acting as a rumble strip. The delineation system was completed with the placement of yellow striping, amber pavement markers, and portable delineators on the asphalt pad. Amber pavement markers and the portable delineators were attached to the asphalt pad with epoxy adhesive and were spaced at 20 feet and 100 feet respectively.

The delineator was the Traf-Flex post which is a rigid plastic post, 38½-inches in height, 2-3/8 inches in diameter, and utilizes an elastic shock cord as the "hinge". One reflex reflector button was placed 2½ inches from the top of the post and two 4-inch wide strips of internal lens reflective sheeting were placed around the post between 6 inches and 17 inches from the top.

The delineators were inspected for maintenance of reflectors at two and three week intervals during the six month installation period. Some reflectors were replaced on each inspection. During the six month period, evidence of numerous vehicle

ClibPDF - www.fastio.com

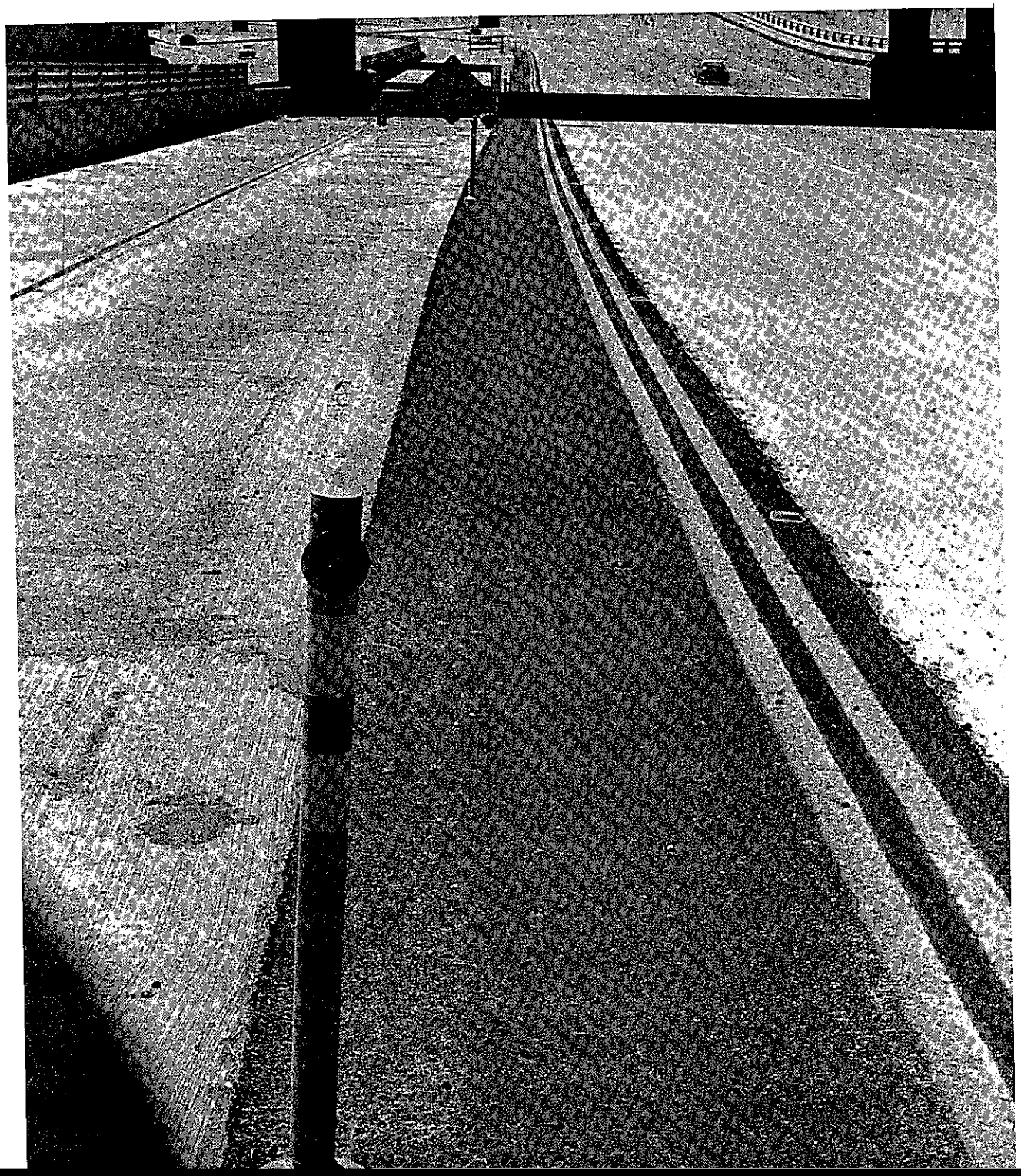

ClibPDF - www.fastio.com

impacts were observed and three delineator posts were replaced. One of the posts was replaced when its elastic cord was severed. The remaining two were replaced because of damage to the posts. The delineator posts were reused when the closure section was moved approximately one mile south for the opening of the interchange with I-80.

When the delineators were removed from their original location, part of the asphalt remained attached to the underside of the bases. This asphalt could not be removed, and the bases were salvaged by compressing the asphalt into a ½-inch layer by striking the underside of the base with a carpenter's hammer. This procedure took about one minute per base and provided a level surface for the reuse of the bases.

Two changes were made to the delineation system with the relocation of the closure section. The first change was a closer spacing between delineator posts of 75 feet. It was felt that the original spacing of 100 feet was too great for the 55 mph average traffic speed. The second change was an increase in the width of the asphalt sacrifice pad from 4 to 5 feet. This came about because of the desirability of increasing the distance between double yellow striping and delineators so that the temptation of exhibitionist drivers to strike the posts would be decreased.

Finally, it was discovered that when an excess of epoxy is applied to the Traf-Flex base, it will flow upward through the hole in the center of the base when it is pressed onto the asphalt surfacing. It will then contaminate the threaded connection between the post and the base, bond them together, and make it impossible to replace the post without also removing the base. This can be prevented by wrapping the threads of the post with wax paper before screwing it onto the base or by plugging the hole in the base in some way.

Woodland Location

The I-5 end of freeway installation East of Woodland is composed of a 1200 foot closure of two lanes followed by 800 feet of horizontal curve with a radius of about 500 feet. Thirty-five delineators are located along this 2,000 feet of roadway. Average traffic speed in the lane closure is 50 mph and slows to 35 mph through the curve. The installation has been in service about one year. This installation has not been studied as closely as the Sacramento location and details of the installation will be brief.

The delineators are spaced on 50 foot centers on the tangent through the lane closure and 100 foot spacing on the curve. The delineator is the ST Flasher delineator with a reddish orange post mounted in the flexible rubber base. Two reflector buttons are placed near the top of the post. Pavement markers are placed along the 2,000 foot length at 24 foot spacing.

ClibPDF - www.fastio.com

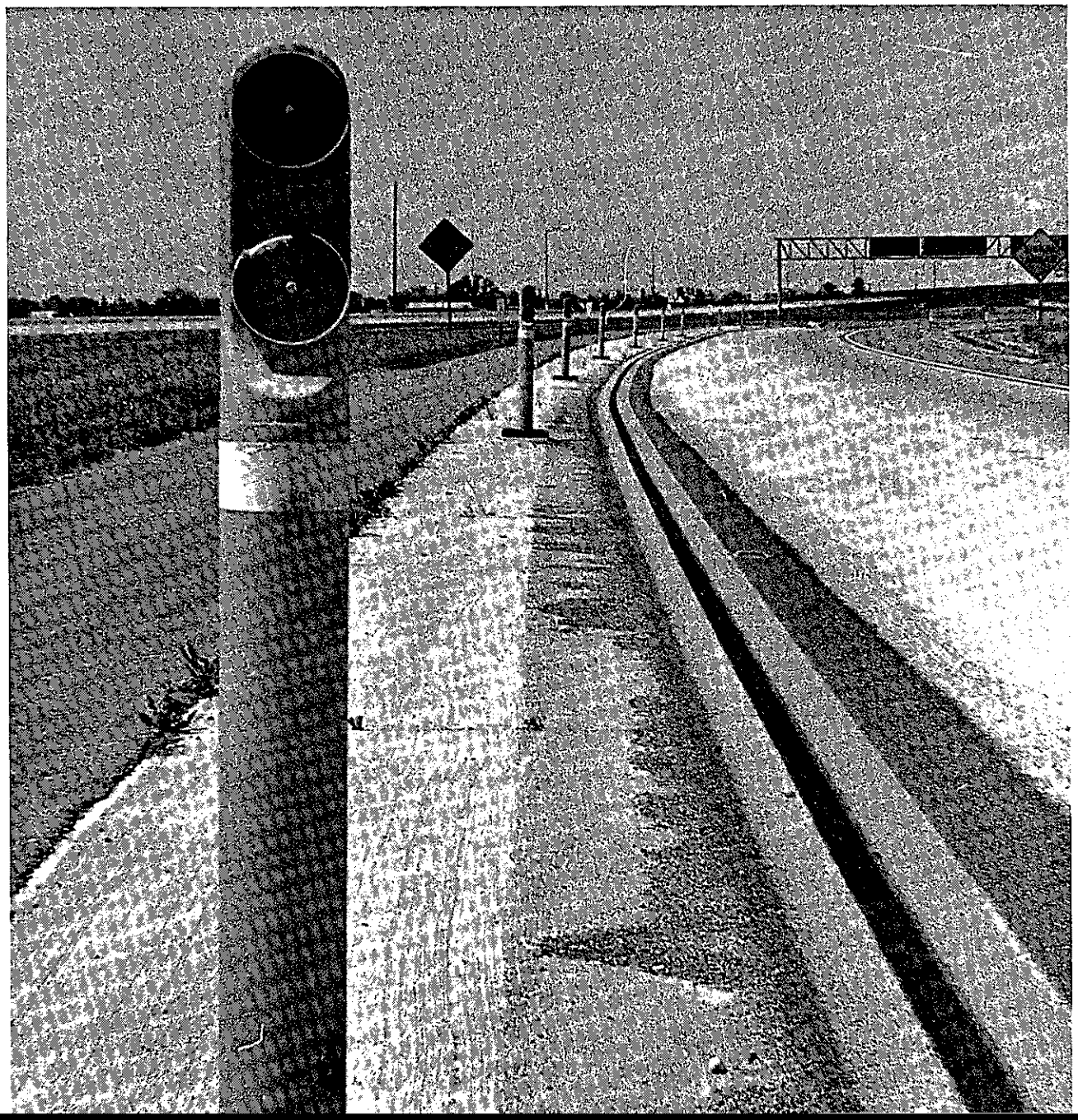

ClibPDF - www.fastio.com

A modification was made to this delineator by attaching the flexible base to a plywood board which in turn is attached to the surface. The plywood was attached to the concrete surface in the lane closure section with power driven studs, and simply nailed to the asphalt surfacing in the section of curve for the off ramp.

The main purpose for this modification was to facilitate the replacement of damaged delineators. (Another advantage is that the plywood allows for the replacement or removal of the base without damage to the base or the pavement surface. A sketch of this delineator and modification is shown in Appendix II.) This modification, however, has other advantages. The holding ability of this attachment when struck by a vehicle is considered to be more effective when compared to adhesives. When adhesives are used, the rubber base fails by tearing from the epoxied surface.

ClibPDF - www.fastio.com

TEST PROCEDURES

The three different types of tests which were conducted on the portable delineators provided means for evaluating their impact resistance, their susceptibility to temperature, and their visibility. Vehicular impact testing measured the operating performance of the delineator and the durability of its materials, temperature tests measured how susceptible the materials are to temperature extremes, and visibility was determined by comparing the delineator's dimensions and color with that required in the Standard Specifications Section 7-1.093 dated 1971 (see Appendix 1).

To measure each delineator's reaction to vehicle impact, the delineators were attached to the surface and struck by a vehicle at various speeds. Results after each impact were recorded. In general, the first two impacts were at 20 and 40 mph and were used to record delineator action with high speed motion photography. The delineator was then subjected to two additional vehicle impacts at 20 and 40 mph. Each portable delineator was then struck repeatedly at 60 mph until failure occurred or no additional information could be gained. The above testing routine was established after tests on the first three delineators involving one impact at 40 mph followed by repeated impacts at 60 mph proved to be too severe. Impact test comparison data are shown in Test Comparison Table 1.

Throughout the vehicular impact test program every effort was made to maintain or help the delineator to return to an upright position after impact so that the maximum of information could be gained.

The susceptibility of delineators to temperature extremes was determined by observing the delineator's self-supporting ability at a high temperature and its ability to withstand a 180° bend without evidence of distress at a low temperature.

A delineator was considered to have passed the test for self-supporting ability at high temperature if it remained upright after 4 hours exposure to +140° F. Likewise, if after 4 hours exposure to -8° F, a delineator could be bent over 180° with no distress, it passed the test for toughness at low temperature.

Post visibility was determined by recording color and dimensions of each delineator. Dimensional measurements included post height, width or diameter, target area, and reflecting area. Refer to Test Comparison Table 2 for a comparison of each delineator with the requirements of Standard Specification 7-1.093.

Emphasis in this testing program was placed on evaluation of the delineators themselves and not on the materials with which they are made. In the future, consideration must be given to the

ClibPDF - www.fastio.com

qualifications of these materials. Tests on materials which should be performed are the Fade-Ometer test which measures fading characteristics under ultra-violet light, ozone test which measures weathering effects of rubber materials, color evaluation test which measures conformance within some color limits, reflectance test for reflective materials, seal test for reflex buttons to insure that water will not enter between the reflector and backing plate, and so on.

In the following individual evaluations, comments made of a delineator's reflector are not to be considered related to the delineator itself since any type of reflector may be attached to a delineator's post.

ClibPDF - www.fastio.com

"D-300 Delineator"
Flash-R-Lite Corporation
1945 Blake Avenue
Los Angeles, California 90039

A. Post Design

The post of the D-300 is composed of reddish orange polyethylene tubing. It is 42 inches long and 4 inches in diameter and provides 168 square inches of target area. This tubing is mounted in a rectangular, flexible heavy base (see Figure 1). The post is flared at the bottom which serves as a socket to hold it to the base. To the top of the post are attached two 3¼-inch amber reflectors.

The post is mounted with a tight fit into the base and slightly off center. This allows the rubber base to flex when the post is struck. When the vehicle has passed over, the resilience of the curved rubber base uprights the post.

B. Performance

This delineator was anchored to the asphalt surface with epoxy. Only a third of the base from one end was epoxied to allow for the "hinge" action of the base.

Three vehicular impact tests were conducted at 40, 60, and 60 mph before the testing was discontinued on this delineator. With each vehicle impact the base flexed as intended but the post separated from the base and was displaced from 80 to 130 feet in the direction of travel. After each vehicle impact, the post was reassembled in the base which was still attached to the surface. The base was progressively torn from the asphalt surface with each impact. The base had not completely severed after the third impact when testing was discontinued.

The reflector buttons survived the first impact at 40 mph but were broken on the second impact at 60 mph.

After being exposed to +140° F., the delineator was upright under its own weight. The base operated properly at this temperature, but the post did not straighten itself when bent in half. The post also tore easily when struck with the claw of a hammer.

The post was placed in a cold environment lowered to a temperature of -8° F. It was struck with a hammer at bumper height and then bent in half without showing any signs of distress.

C. Discussion

When the base is anchored to the surface with epoxy, it is torn when hit at a speed of 40 mph or more because the ridge on the bottom edge where the adhesive was applied does not provide

ClibPDF - www.fastio.com

enough cross-section to prevent tearing of the base material. Other methods of attachment could be used (see Appendix II), but the separation of the post from the base would still be a problem.

Action of the delineator when the base is unattached to the surface was not studied. It is felt that when the base is unattached, it would be displaced along with the post when struck at high speed. It appears, then, that the best use of the "D-300" delineator is in an active construction location unattached to the surface.

This delineator conforms with the requirements of Section 7-1.093 of the 1971 Standard Specifications for color, width, target area, height, and reflectors.

ClibPDF - www.fastio.com

"D-300 Delineator"
Flash-R-Lite Corporation
1945 Blake Avenue
Los Angeles, California 90039

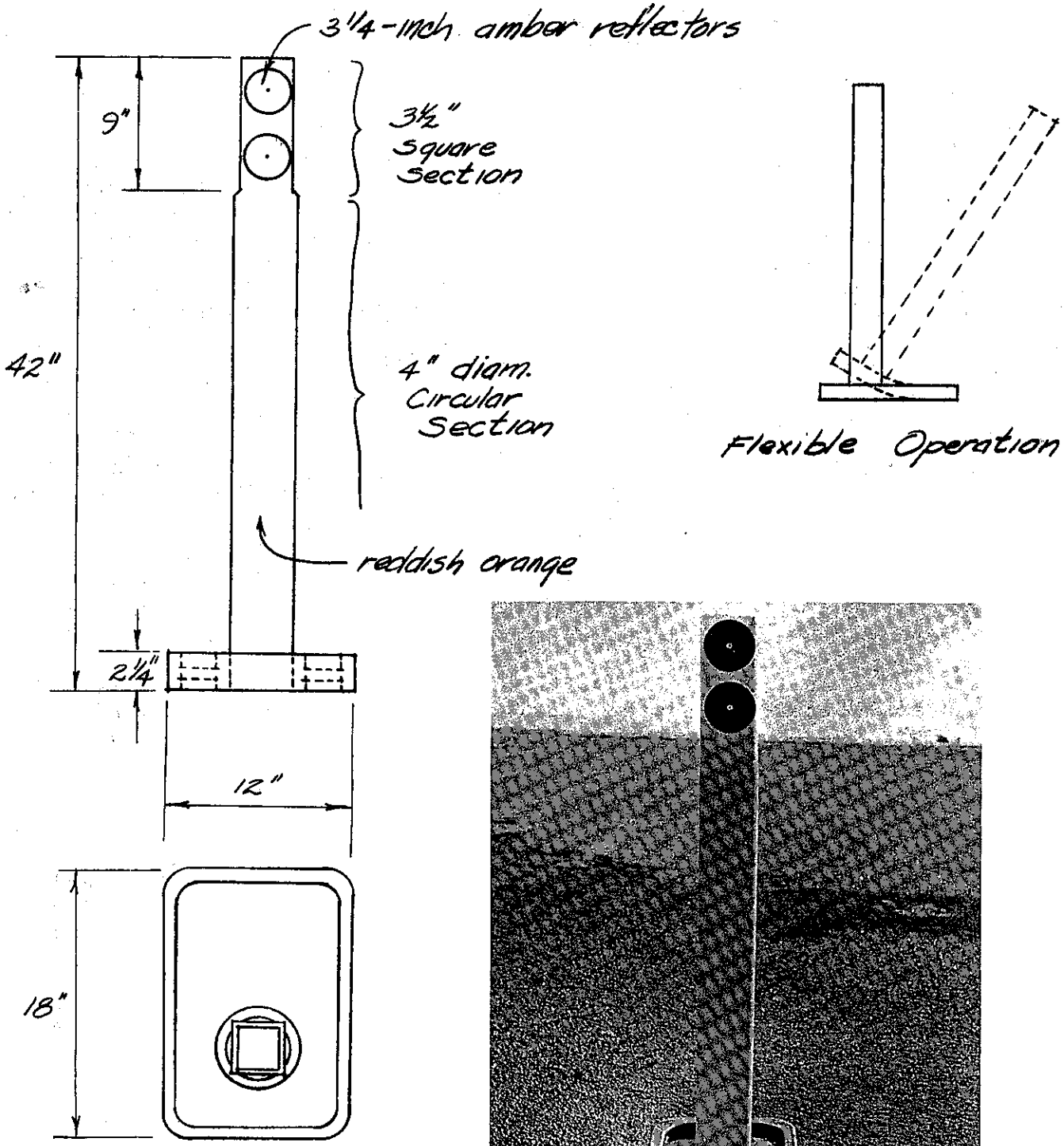

FIGURE 1

ClibPDF - www.fastio.com

"FLEX-A-LITE"
Flex-A-Lite Markers
P. O. Box 67
Hilltop Lakes, Texas 77871

A. Post Design

This marker is a grey fiberglass tube mounted to a steel anchor bar by means of a coil spring. The flexible coil spring forces the post to return upright after the vehicle has passed. The post is 36 inches in height and has a diameter of 1½ inches. The resulting target area is 51 square inches. Approximately 9 square inches of effective reflecting area is provided by three 4-inch strips of silver, internal lens, reflective sheeting.

B. Performance

Two of these delineator posts were tested using earth anchors. One post was mounted on a 28 inch length of No. 5 steel bar backfilled vertically in the soil and the other on a 16 inch long 1½" x 1½" x 1/8" angle placed at a 45° incline in the soil. Both anchors held the post firmly.

The marginal speed for both posts was 30 mph and failure in both cases was the same. The first impact at 30 mph or more fractures the post at bumper height and the second impact severs the post at the point of previous fracture.

Temperature susceptibility tests were not conducted for this delineator because the steel spring and fiberglass post were not expected to be affected significantly by temperatures of -8 and +140° F.

C. Discussion

One of the post stubs was hit three additional times after failure to determine if any damage would occur to the coil spring. This limited testing indicates that the coil spring works effectively as a hinge; however, the reduced mass of the post may have biased the evaluation.

The manufacturer can supply the posts in any color and also can supply a base which can be attached to the pavement surface. A broken post can also be replaced on its anchor, but the ease of replacement is overcome by the short service life.

The delineator submitted for testing did not conform with the requirements in Section 7-1.093 of the 1971 Standard Specifications for reflectors, height, cross sectional area, diameter or color (see Table 2).

ClibPDF - www.fastio.com

"Flex-A-Lite"
Flex-A-Lite Markers
P.O. Box 67
Hilltop Lakes, Texas 77871

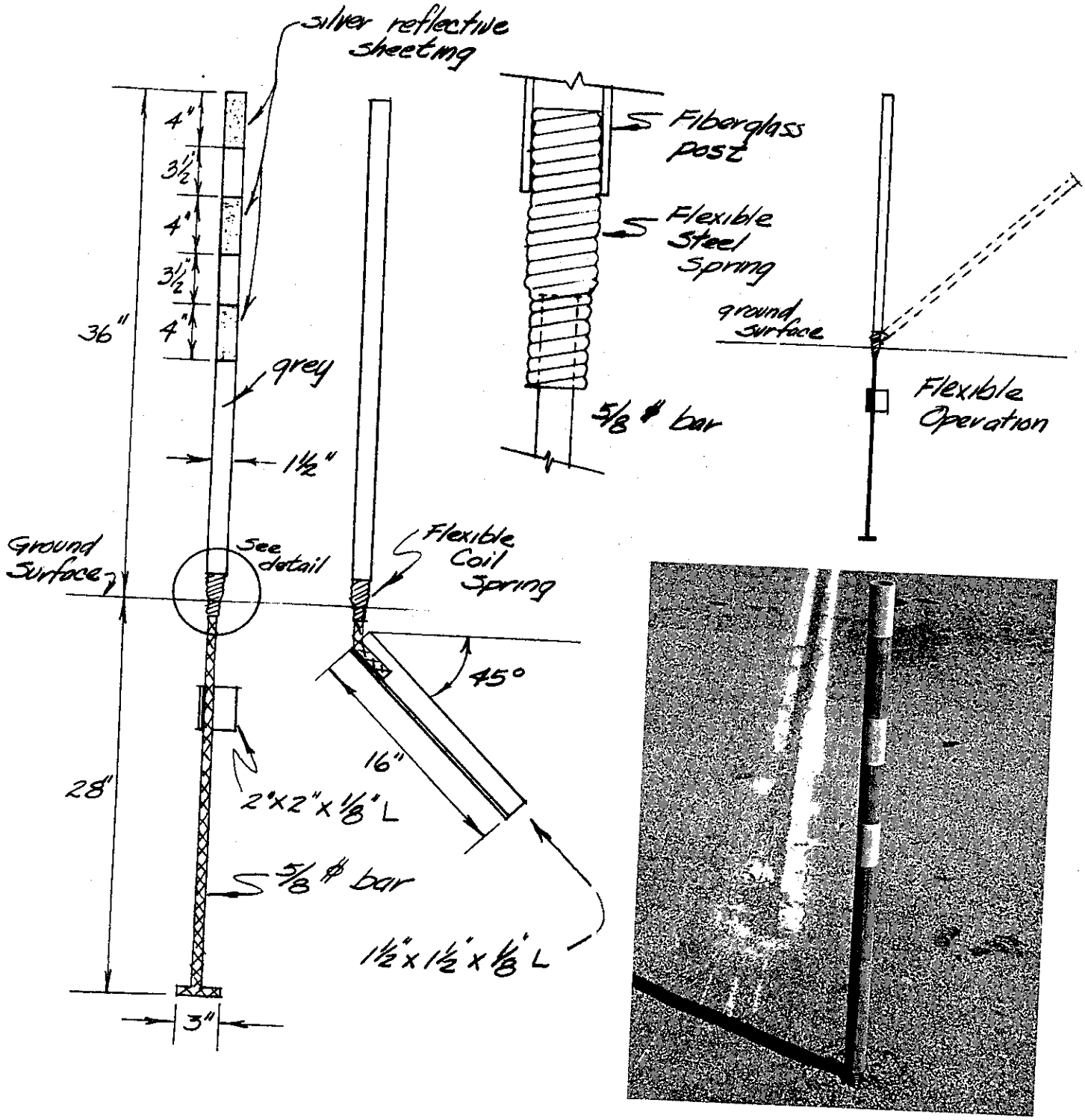

FIGURE 2

ClibPDF - www.fastio.com

"FLEXOPOST"
Proven Products
7560 S.W. Laview Drive
Portland, Oregon 97219

A. Post Design

The Flexopost is extruded white polyethylene tubing of approximate triangular cross section whose sides are 5 x 5 x 4 inches. The post is anchored in the ground by backfilling. The tubing is flexible and uprights itself after impact because of the stiffness of the triangular cross section (see Figure 3).

The post meets minimum requirements for height, width, and target area as set in Standard Specification 7-1.093. The reflectors attached to the post were silver external bead (cat's-eye) mounted on a flexible plastic backing.

B. Performance

Three of these posts were tested. The only difference between the posts was the methods of placement. One was backfilled with polyurethane foam, and the other two were backfilled with soil. Backfilling material was placed within as well as around the tube. Each post was struck with two impacts at 20 mph, two at 40 mph, and then struck repeatedly at 60 mph, until the tests were discontinued. The posts uprighted themselves after each impact and were still usable at the end of testing. The post with polyurethane backfill withstood 21 impacts before ending the test.

Testing was ended for the remaining two posts when one had been struck 15 times and the other 11 times. Each post showed very little damage at the end of testing. All of the posts developed a 5° list in the direction of travel by the eighth to tenth impact. Damage to the post backfilled with foam was a 3-inch tear 16 inches above the surface. The probable reason for this tear was that the inside of the post was inadvertently over-backfilled with foam to 13 inches above the ground surface. The foam inside the post caused two flexure points to develop in the post, one at ground surface and the other at the top of the foam 13 inches higher. This allowed it to "hang up" on the vehicle undercarriage. The tear occurred with the second impact and increased slightly during the test from 3 inches to 4 inches wide. The tear did not affect the operation of the post.

The Flexopost was upright after 4 hours in +140° F environment. The post was also bent in half several times at this temperature and with the exception of one bend it returned to its original position.

ClibPDF - www.fastio.com

The post showed no signs of distress when subjected to a 180° bend at a temperature of -8° F. It did not shatter when struck with a hammer at this temperature.

C. Discussion

This is a durable delineator and is recommended for high-speed long-term use. With the exception of reflectors, maintenance would be low. The limitation of this delineator is that it must be anchored below the surface so that relocation or reuse would be difficult.

When placing this post in the ground, it is important that the inside as well as the outside of the post is backfilled so that the section will not collapse inward and pull out of the ground on impact. Backfill inside the post should be no higher than the ground surface so as not to give additional stiffness to the section.

Our tests show that the cap available for covering the top of the post (see Figure 3) will be removed by each vehicle impact unless it is firmly attached to the post with an adhesive or fastener. If the cap is permanently attached to the post, access to the inside of the post is lost and maintenance of reflectors is more difficult. The post cap might be a desirable deterrent for vandalism such as dropping rocks or other material inside the post or theft of reflectors, etc. Also, without a cap the post will fill with rainwater or snow which can be overcome by placing a small drain hole at ground surface. But, taking all into consideration, it is probably more desirable to leave the cap off the post.

The Flexopost conforms with the 1971 Standard Specifications for height and width. The white color of the post does not conform, but it was judged easily seen because of the post's 5-inch width. The reflectors submitted with this delineator do not meet the requirements of the 1971 Standard Specifications; however, they can be replaced with reflex type reflectors.

ClibPDF - www.fastio.com

"Flexopost"
Proven Products
7560 S.W. Laview Drive
Portland, Oregon 97219

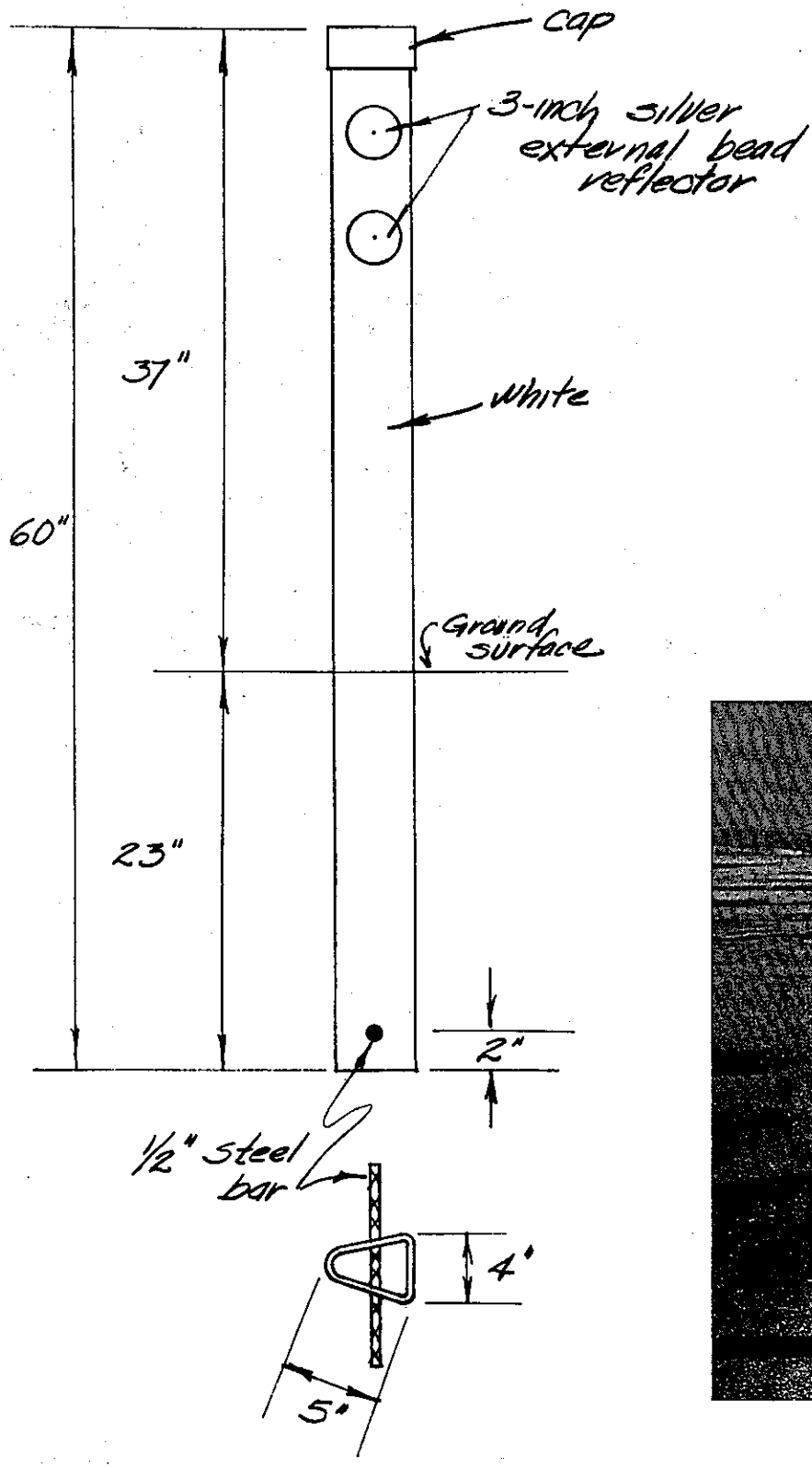

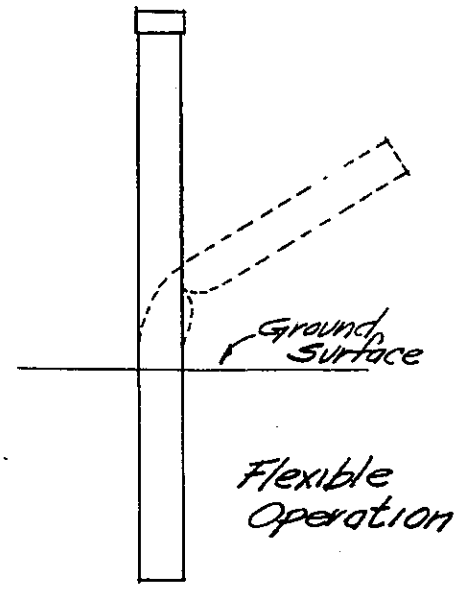

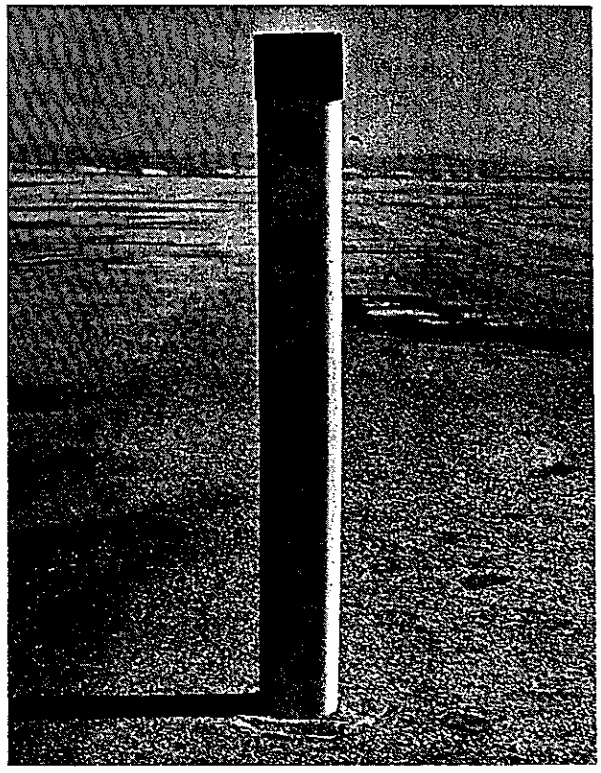

FIGURE 3

ClibPDF - www.fastio.com

"GLO-POST"
Interstate Division of Royal Industries
947 North Vignes Street
Los Angeles, California 90012

A. Post Design

The "Glo-Post" is 40 inches in height and has a 4-inch diameter. It is made of reddish orange polyvinyl chloride tubing mounted in a hard rubber base. The target area of the post is 160 square inches. Night visibility is furnished by two amber reflectors attached to the post with a vinyl strip (see Figure 4).

The post can be mounted into two separate bases which differ only in size and shape. One is 16 inches square and the other is round with a 12-inch diameter. A flange on the bottom of the post holds it onto the base with a tight fit. After the base is anchored to the surface, the post is designed to flex when struck by a vehicle.

B. Performance

Three posts were tested with different methods of anchoring. The attachments were a square base which was spot epoxied at the four corners, a round base using epoxy on the full surface, and a square base using butyl tape as the adhesive over the entire surface.

The three posts were struck an average of three times, once each at 20, 40, and 60 mph. When impacted by a vehicle at 40 mph or less, the post flexed and returned upright, but at speeds over 40 mph the post separated from the base. The post is difficult to reassemble onto the base and impossible to reassemble if the base is permanently attached to the surface.

When subjected to a temperature of +140° F., the post remained upright on its own but would not right itself when bent over. Cold temperature (-8° F) made the post quite brittle, it could not be bent, and it shattered when struck with a hammer.

C. Discussion

This delineator is composed of durable materials for normal temperature use. Its shortcoming is the post-to-base connection which cannot withstand vehicle impacts over 40 mph. If used in areas of higher speed traffic, maintenance could be a problem.

The round base will roll after impact if unattached to the surface and should only be used with an adhesive or other anchor.

The square base when unattached to the surface has the potential of becoming a "dragger". One of the square base delineators

ClibPDF - www.fastio.com

that was anchored with spot epoxy at the corners broke free from the surface on impact and was caught in the undercarriage of the test vehicle. When returned to upright and struck again, the result was the same. The delineator was dragged 150 and 200 feet by the 1968 Dodge test vehicle and could not be removed until the vehicle backed away.

For the above reasons this delineator should be restricted to active construction areas where they could be maintained easily, or to areas where 40 mph is the maximum impact speed.

This delineator fulfills the requirements of the 1971 Standard Specifications for color, size, and reflectors.

ClibPDF - www.fastio.com

"Glo-Post"
Interstate Division of Royal Industries
947 North Vignes Street
Los Angeles, California 90012

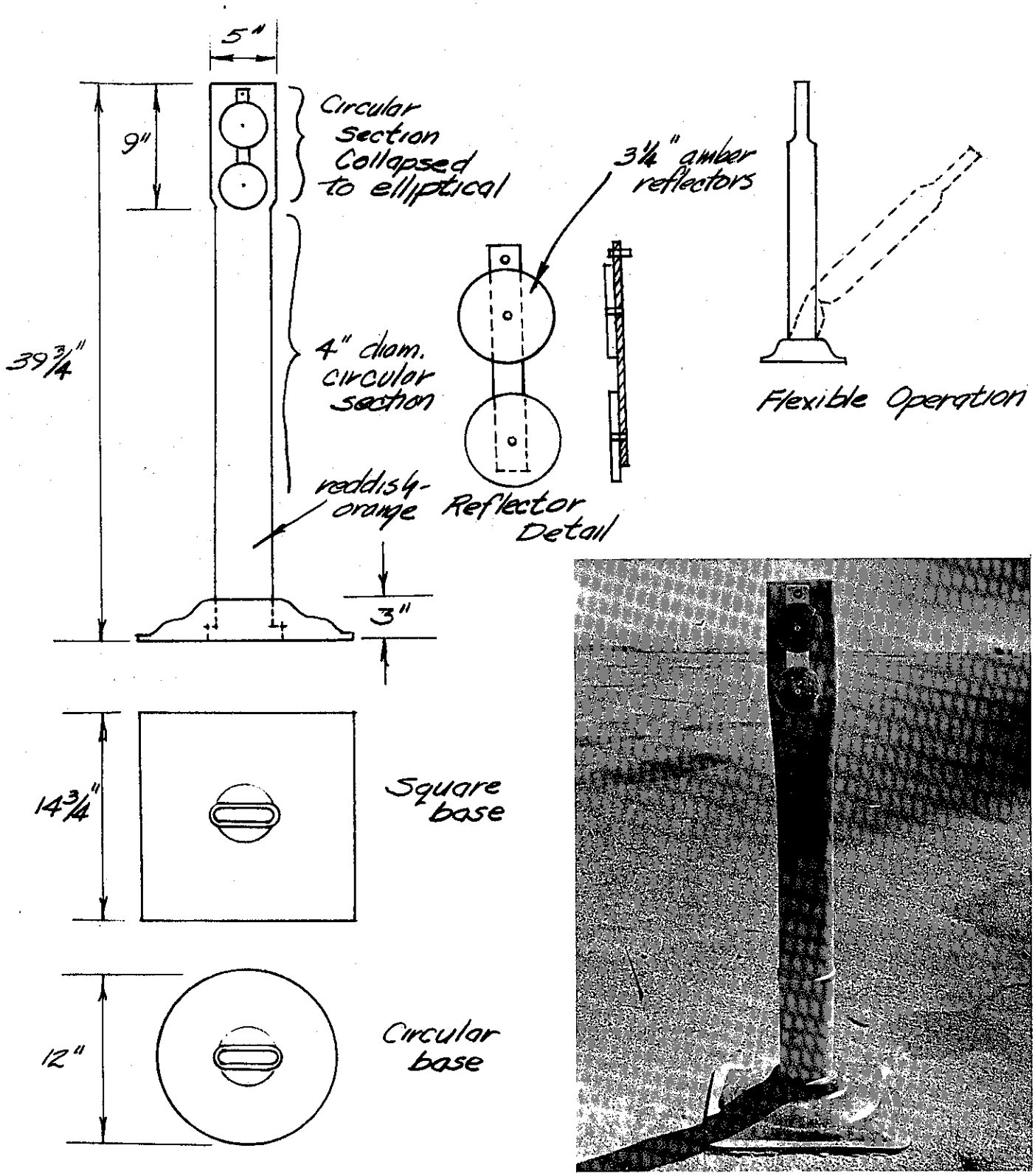

FIGURE 4

ClibPDF - www.fastio.com

"S. T. FLASHER DELINEATOR"
Highway Products Division
of American Molded Products, Ltd.
351 Embarcadero
Oakland, California 94606

A. Post Design

The post of this delineator is a reddish orange polyethylene tube mounted in a flexible rubber base whose weight and resiliency uprights the post after impact (see Figure 5). The post has a flared end which, with a snug fit, holds the post onto the base. Diameter and length of the post are 4 inches by 40 inches. The post is mounted off center in the rectangular base which allows the resilience of the base to upright the post after it has been flexed. Two 3¼-inch amber reflectors are attached to the top of the post along with a 2-inch wide strip of reflective sheeting.

B. Performance

Two posts were tested with similar results. When the delineator was struck, the post separated from the base and the base pulled loose from the surface. The first delineator tested withstood one impact at 40 mph and then failed as described above when struck at 60 mph on the next impact. The second delineator failed on the initial impact at 40 mph.

Tests for temperature susceptibility at -8 and +140° F revealed no sign of distress or inability to operate. The post was subjected to a 180° bend after 4 hours exposure at -8° F. with no cracking. No shattering or cracking occurred when the delineator was struck with a hammer.

The post was still upright after 4 hours of 140° temperature, but the post would not straighten itself if bent in half.

C. Discussion

The flexible rubber base separates from the surface over 40 mph because the load from vehicle impact is transferred to the point of contact between base and surface when the base flexes. The result is that the base comes off the surface like "opening a zipper". This was true for the delineator attached to the surface with epoxy, as well as the one attached with butyl tape.

Separation of the base from the surface is not considered a serious problem since a more positive attachment can easily be acquired (see Appendix II). The shortcoming of this delineator is that the post does not remain in the base when struck at a speed of 40 mph or higher. (The very limited testing with this delineator implies that 40 mph is the marginal impact speed.)

ClibPDF - www.fastio.com

The post can be reassembled within the flexible base while it is still attached to the surface, but not easily.

The best use of this delineator is unattached to the surface or attached as suggested in Appendix II. It should be considered for moderate speed traffic (less than 40 mph) on semi-permanent installations if maintenance is to be kept to a minimum.

This delineator conforms with all the requirements of Section 7-1.093 of the 1971 Standard Specifications for size, color, and reflector.

ClibPDF - www.fastio.com

"S.T. Flasher Delineator"
Highway Products Division
of American Molded Products, Ltd.
351 Embarcadero
Oakland, California 94606

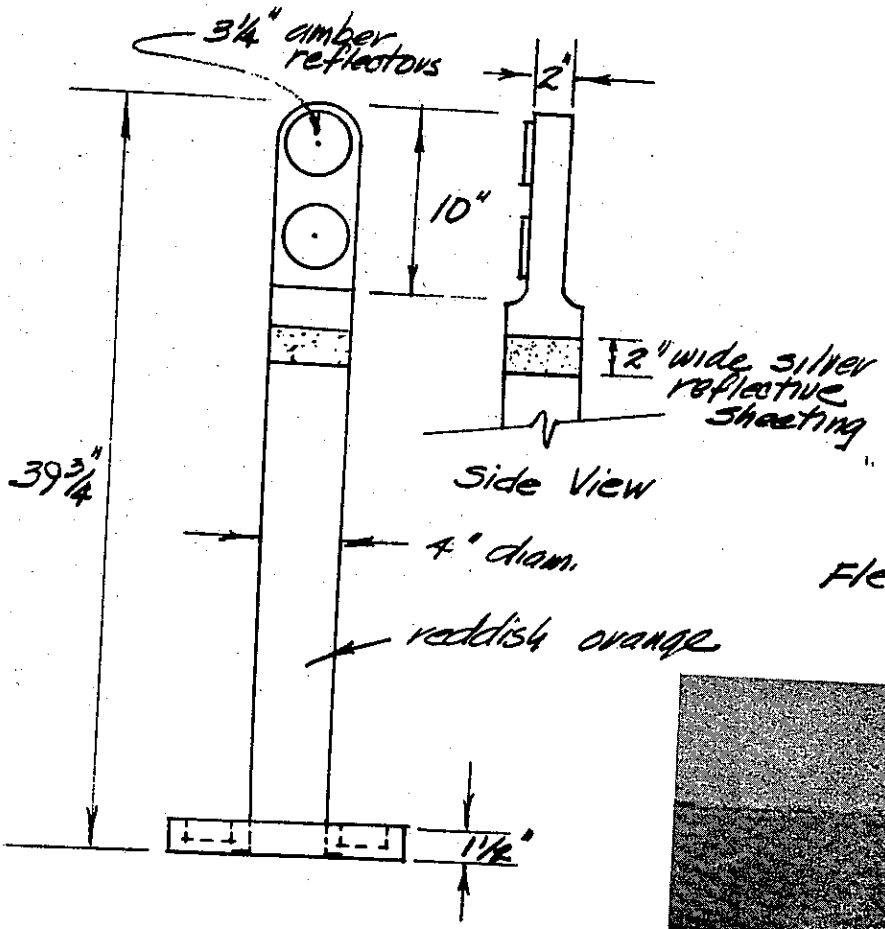

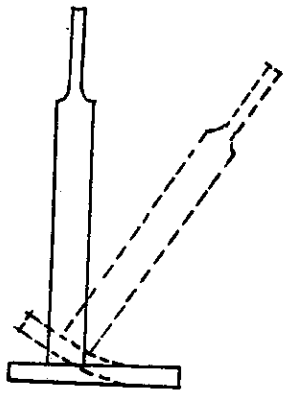

Flexible Operation

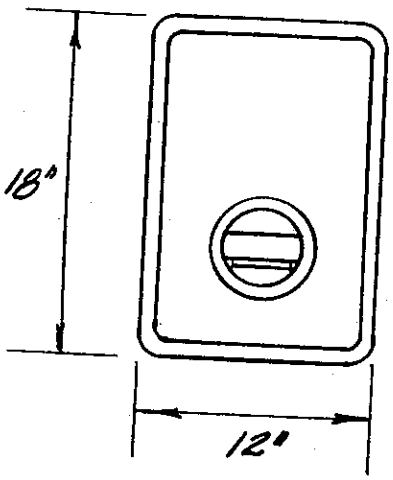

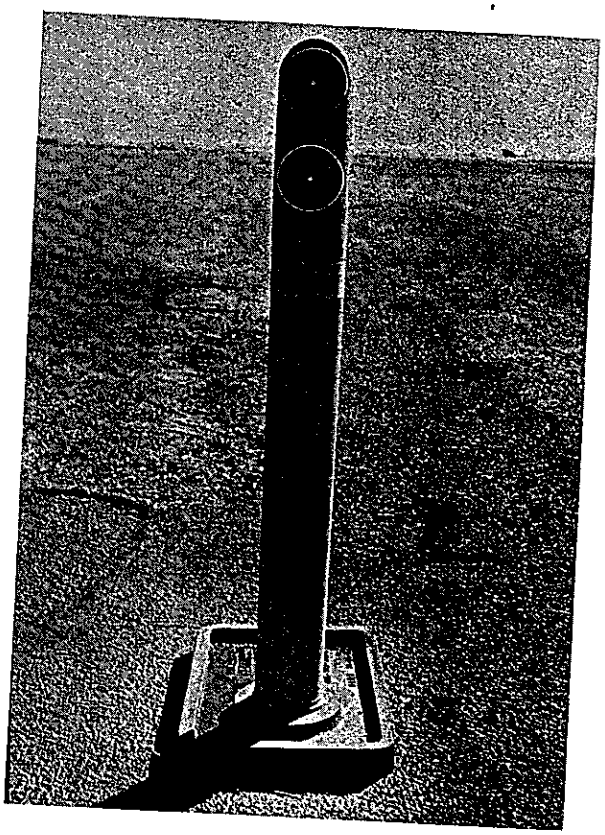

ClibPDF - www.fastio.com

"TRAF-FLEX"
Safety Guide Products - Borg Warner
P. O. Box 248
Scottsburg, Indiana 47170

A. Post Design

This delineator is composed of a yellow rigid plastic post 38½ inches high and 2-3/8 inches in diameter which is attached to a 7-inch diameter base (see Figure 6). The post is attached to the base by a threaded fitting. The terminal end of the post is connected to this fitting with an elastic cord in tension that allows the post to arc when struck and then return back to its original position. The base is designed to be attached to the surface with an adhesive but could be adapted to any means of attachment.

B. Performance

Three of these delineators were attached to the asphalt surface with adhesives and one was connected to a two foot length of 2-inch pipe with an adapter to a pipe threaded coupler. The two foot length of pipe was backfilled below the surface. Each of the four delineators were subjected to four impacts at or below 40 mph without failure. They then were struck an average of 5 additional times at 60 mph before the elastic cord collapsed or was severed (one post failed when the base broke free from the surface). High and low temperatures of +140° and -8° do not significantly affect post, base or action of the elastic cord.

C. Discussion

The Traf-Flex delineator would be suitable in areas of high speed traffic and installations of long duration, for example, 60 mph and two years.

Each post developed an elliptically shaped cross section and a slight camber (3/4-inch at midheight) after the fourth to fifth impact. The only problem this creates is a somewhat unsightly appearance.

One advantage to this post is that it is easily removed from the base. If the elastic cord should break or weaken, a new post can immediately be installed in the existing base. The elastic cord is replaceable so that the post removed can be repaired and used again.

The diameter of this post is 2-3/8 inches which provides a minimal target area of 92 square inches, Standard Specification 7-1.093 requires 2-3/4 inch diameter and 100 square inches. The yellow post does not conform with requirements but was judged easily seen during testing. No reflectors were supplied with the delineators when submitted for testing.

ClibPDF - www.fastio.com

"Traf-Flex"
Safety Guide Products - Borg Warner
P.O. Box 248
Scottsburg, Indiana 47170

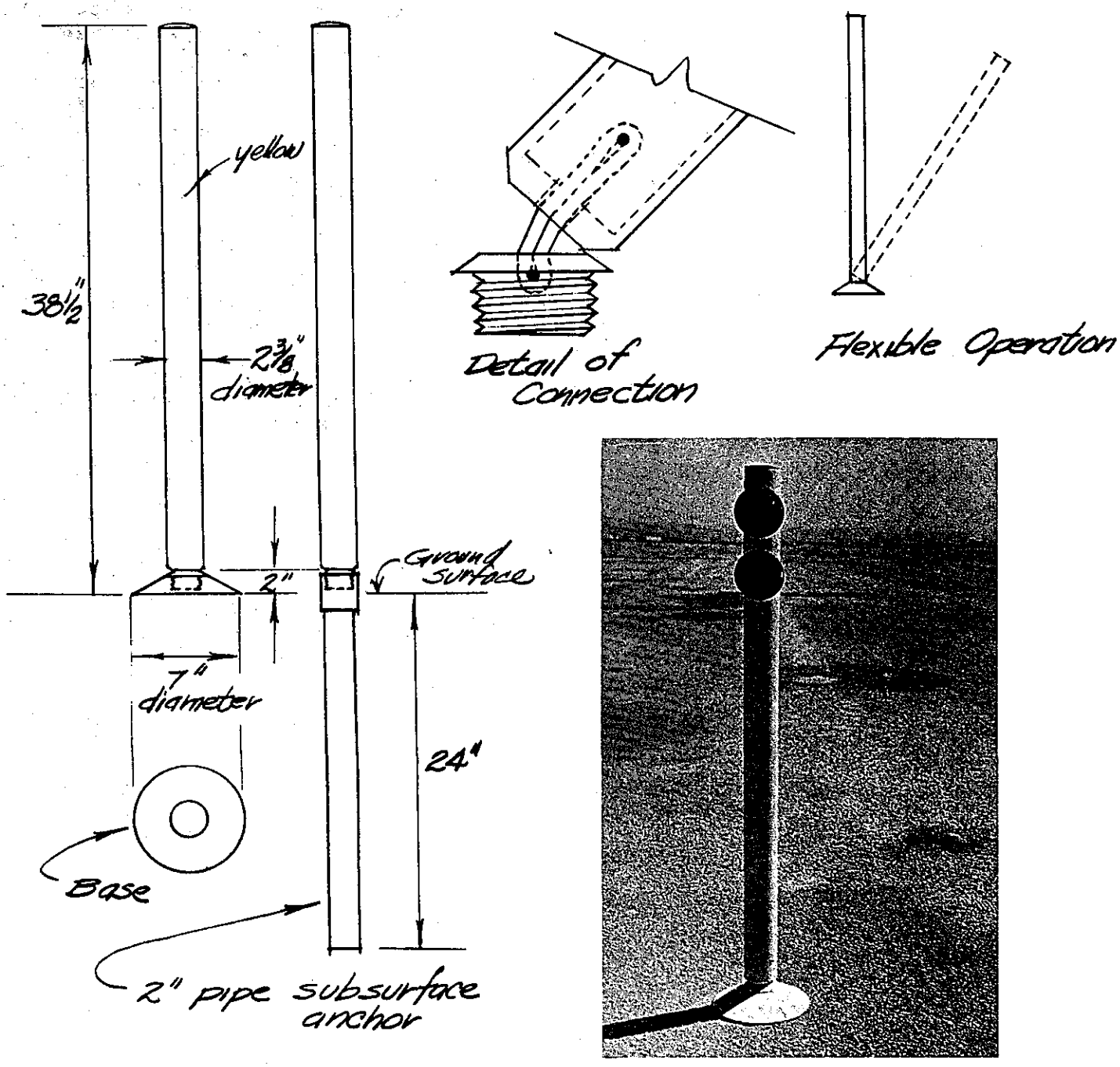

FIGURE 6

ClibPDF - www.fastio.com

"TRI-TIX CONE"
The Kelch Corporation
1216 Leavenworth Street
San Francisco, California 94133

A. Post Design

The Tri-Tix 28-inch traffic cone is 38 inches in height when the extension is added to the top of the reddish orange cone. The extension is 13½ inches long and has two amber reflex type reflectors attached to it. The cone varies in diameter from 2 inches at the top to 7 inches at its base. The base is 13 inches square.

The plastic material of the cone will allow the cone to flex when struck by a vehicle.

B. Performance

The base of the cone was anchored to the surface by "spot epoxy" at the four corners. The cone was struck 3 times, once at 40 mph and twice at 60 mph, before the corners on the side facing the oncoming vehicle pulled loose from the asphalt surface. With the first two impacts the cone flexed when struck and returned to an upright position. The reflectorized extension was displaced 60 to 100 feet with each impact.

The cone was upright under its own weight after 4 hours in +140° F temperature. When bent over at this temperature, the cone did not return to upright.

After 4 hours of -8° F, the delineator was struck with a hammer and bent in half without showing any signs of distress.

C. Discussion

The consideration for testing this cone as a portable delineator is that its reflectorized extension places it within this category.

The extension was displaced with each impact because no attempt was made to firmly attach it to the cone. The cone relies on the extension for height and night visibility. Therefore, it is important that the extension be firmly and positively attached to the cone in some way.

Without a more permanent connection between extension and cone, it is recommended that this cone be used only in an active construction area where it can be monitored easily. To prevent damage to the cone's base or the pavement surface, the cone's best use would be unattached to the surface.

This cone complies with the requirements of Section 7-1.093 of the 1971 Standard Specifications for reflectors, target area, height, and color.

ClibPDF - www.fastio.com

"Tri-Tix Cone"
The Kelch Corporation
1216 Leavenworth Street
San Francisco, California 94133

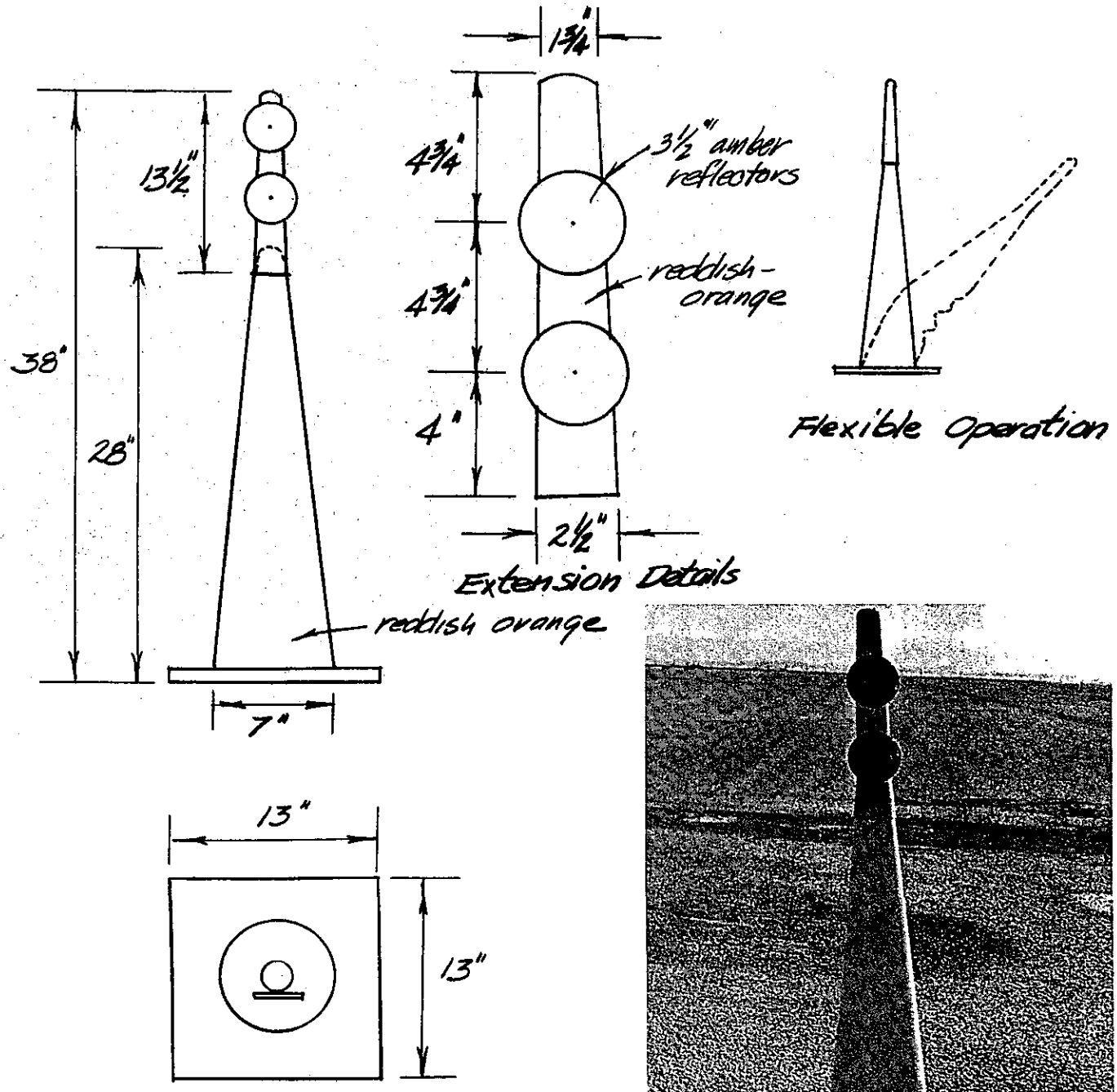

FIGURE 7

ClibPDF - www.fastio.com

TEST COMPARISON TABLE 1

	D-300	Flex-A-Lite	Flex-A-Lite	Flexopost	Flexopost	Flexopost	Glo-Post	Glo-Post	Glo-Post	ST Flasher	ST Flasher	Traf-Flex	Traf-Flex	Traf-Flex	Traf-Flex	Tri-Tix-Cone
1. DESIGN																
Anchor																
Sub-surface		X	X	X	X	X									X	
Surface	X						X	X	X	X	X	X	X	X		X
Hinge action																
Base	X									X	X					
Post-Base Connection		X	X									X	X	X	X	
Post				X	X	X	X	X	X							X
2. MODE OF FAILURE																
Anchor																
Asphalt Surface							X							X		X
Adhesive										X	X					
Base	X															X
Post																
Post to Base Connection	X							X	X	X	X	X	X		X	
Post		X	X													
Number of impacts to failure	3	4	3	*	*	*	3	5	2	2	1	8	5	6	15	3
3. VISIBILITY																
Reflector lost after 1st impact		-	-		X	X	X	X	X	X	X	X	-	X	X	X
Insufficient target area of post		X	X									**	**	**	**	
Color not easily seen in daytime		X	X												X	

X In DESIGN indicates type of design tested.
X In MODE OF FAILURE indicates how failure occurred.
X In VISIBILITY indicates where visibility was unsatisfactory.
* After 21, 15, and 11 impacts respectively, posts were still usable.
** Target area borderline, see Table 2.

ClibPDF - www.fastio.com

COMPARISON TABLE 2

COLOR CODE

R-O = Reddish Orange

G = Gray

W = White

Y = Yellow

B = Black

	Height above surface inches	Width or diameter inches	Target area of post in.^{2}	Reflecting Area in.^{2}	Color
STAND. SPEC. 7-1.093	37	2 3/4	100	15	R-O
D-300	42	4	168	15	R-O
Flex-A-Lite	36	1 1/2	51	9	G
Flex-A-Lite	36	1 1/2	51	9	G
Flexopost	37	5	185	14	W
Flexopost	37	5	185	14	W
Flexopost	37	5	185	14	W
Glo-Post	39 3/4	4	159	15	R-O
Glo-Post	39 3/4	4	159	15	R-O
Glo-Post	39 3/4	4	159	15	R-O
ST Flasher	39 3/4	4	159	19	R-O
ST Flasher	39 3/4	4	159	19	R-O
Traf-Flex	38 1/2	2 3/8	92	0	Y
Traf-Flex	38 1/2	2 3/8	92	0	Y
Traf-Flex	38 1/2	2 3/8	92	0	Y
Traf-Flex	38 1/2	2 3/8	92	0	B
Tri-Tix-Cone	38	Varies	140	15	R-O

NOTE: Reflecting area taken as perpendicular to driver's line of sight.

ClibPDF - www.fastio.com

APPENDIX I

7-1.093 Portable Delineators.--Portable delineators shall be furnished, placed and maintained in accordance with the provisions in Sections 7-1.08, "Public Convenience", and 7-1.09, "Public Safety", and as provided in the special provisions.

Portable delineators, including the base, shall be composed of a material that has sufficient rigidity to remain upright when unattended and shall be either flexible or collapsible upon impact by a vehicle. The base shall be of such shape as to preclude roll after impact. The base shall be of sufficient weight or shall be anchored in a manner such that said delineator shall remain in an upright position.

If the portable delineators are damaged, displaced or are not in an upright position, from any cause, said delineators shall immediately be replaced or restored to their original location, in an upright position, by the Contractor.

The vertical portion of the portable delineators shall be of a brilliant orange or orange and white color combination that will provide contrast with the background. The posts shall be a minimum of 2-3/4 inches in width or diameter or, if tapered, shall have a minimum cross-sectional area of 100 square inches, measured through the vertical axis of the delineator, normal to the roadway. The minimum height shall be 37 inches above the traveled way.

Two 3¼-inch amber (yellow) reflectors shall be mounted a minimum of 1½ inches apart and at a height on the post so that one reflector will be between 2.5 feet and 3 feet above the surface. The reflectors shall conform to the provisions in Section 82-1.02D, "Reflectors".

Only one type of portable delineator shall be used on the project. The type of portable delineator proposed for use on the project shall be submitted to the Engineer for approval prior to placement on the project.

When work is in progress in a trench or other excavation adjacent to the traveled way, the portable delineators shall be placed on the edge of pavement. At other times, the portable delineators shall be placed off of and adjacent to the edge of pavement.

The portable delineators shall be spaced as necessary for proper delineation; however, in no case shall the spacing between delineators exceed 100 feet on tangents or 50 feet on curves.

The requirements in this Section 7-1.093 will in no way relieve the Contractor from his responsibility to provide such devices or measures as may be necessary to comply with the provisions in Section 7-1.09, "Public Safety".

ClibPDF - www.fastio.com

When no longer required for delineation, the portable delineators shall be removed from the site of the work.

The contract lump sum price paid for portable delineator shall include full compensation for furnishing all labor, materials, tools, equipment and incidentals, and for doing all the work involved in furnishing, placing, maintaining, replacing, and removing and disposing of portable delineators as specified herein and as directed by the Engineer.

When the Engineer's Estimate does not include an item for portable delineators full compensation for furnishing, placing, maintaining, replacing, and removing and disposing of portable delineators shall be considered as included in the prices paid for the various contract items of work involved and no separate payment will be made therefor.

ClibPDF - www.fastio.com

APPENDIX II

In the sketch shown below is a modification to the "flexible base" delineator. The purpose of the modification is to adapt this type of delineator base to semi-permanent applications. This modification is necessary because the flexibility of the base, requisite for its operation, also creates an ineffective attachment to the surface when adhesives are used. The base must be held in place from the top if it is to endure repeated vehicle impacts.

The modification is accomplished by attaching a piece of exterior grade plywood (slightly larger in size than the base) to the surface with lag screws, nails, power-driven studs or adhesives. The flexible base is then bolted (or nailed) to the plywood. The post or base can readily be removed if replacement becomes necessary without removing the plywood.

The main purpose of the plywood is to facilitate the removal or replacement of the base without damaging the base or the pavement surface.

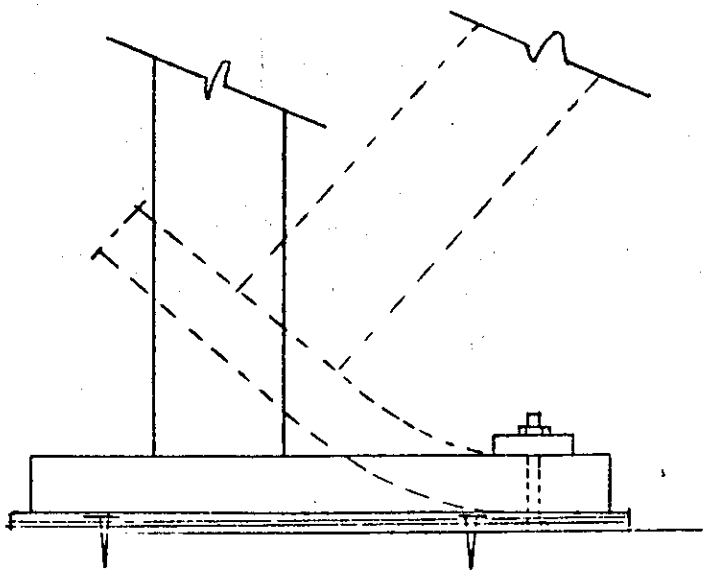

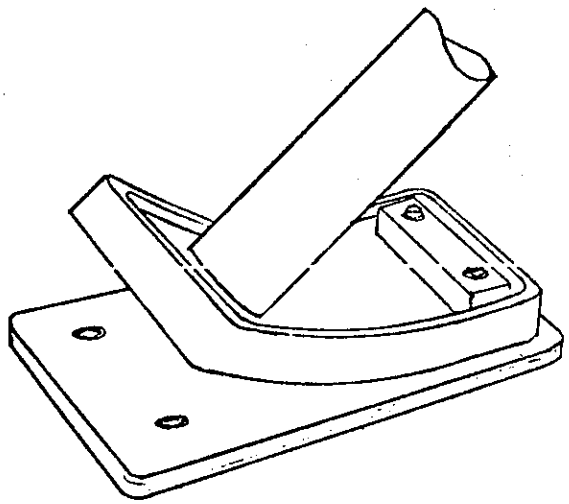

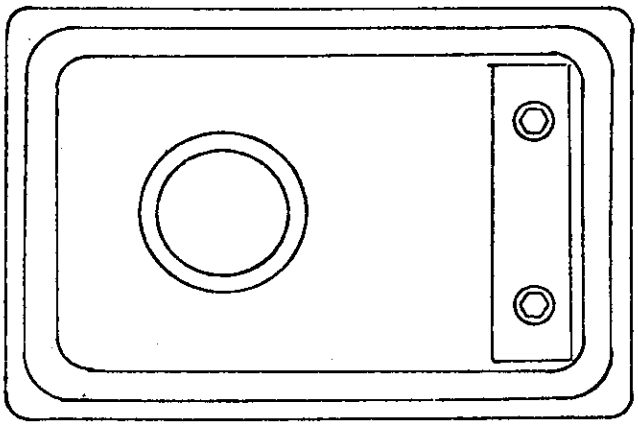

ClibPDF - www.fastio.com

REFERENCES

1. "Evaluation Tests of 'Defiant Self Rectifying Safety Steel Post'", E. F. Nordlin, August 1969.

2. "Evaluation Tests of 'Pop-Up Traffic Sentinel'", E. F. Nordlin, September 1968.

3. "A Final Report on a Cooperative Appraisal of Devices to Guide Traffic Through Construction", J. C. Obermuller, 1967.

4. "A Progress Report on a Survey and Evaluation of Devices for Handling Traffic Through Construction", E. F. Nordlin, 1965.

ClibPDF - www.fastio.com