HIGHWAY RESEARCH REPORT

EVALUATION OF COMMERCIAL SOIL PRESSURE CELLS

68-17

STATE OF CALIFORNIA

TRANSPORTATION AGENCY

DEPARTMENT OF PUBLIC WORKS

DIVISION OF HIGHWAYS

MATERIALS AND RESEARCH DEPARTMENT

RESEARCH REPORT

NO. M & R 636342

Prepared in Cooperation with the U.S. Department of Transportation, Bureau of Public Roads May, 1968

ClibPDF - www.fastio.com

ClibPDF - www.fastio.com

STATE OF CALIFORNIA—TRANSPORTATION AGENCY

RONALD REAGAN, Governor

DEPARTMENT OF PUBLIC WORKS
DIVISION OF HIGHWAYS
MATERIALS AND RESEARCH DEPARTMENT
5900 FOLSOM BLVD., SACRAMENTO 95819

May 1968

Interim Report
M&R No. 636342

Mr. J. A. Legarra
State Highway Engineer

Dear Sir:

Submitted herewith is a research report titled:

EVALUATION OF

COMMERCIAL SOIL PRESSURE CELLS

TRAVIS SMITH and ERIC NORDLIN
Principal Investigators

W. G. WEBER/E. C. SHIRLEY and J. E. BARTON
Co-Investigators

Assisted by

W. Chow
G. T. Gipson

Very truly yours,

JOHN L. BEATON
Materials and Research Engineer

ClibPDF - www.fastio.com

ClibPDF - www.fastio.com

TABLE OF CONTENTS

	Page
ABSTRACT	i
ACKNOWLEGMENTS	ii
INTRODUCTION	1
CONCLUSIONS	1
RECOMMENDATIONS	1
DISCUSSION	2
Description of Pressure Cells	2
Description of Readout Devices	2
Calibration	4
Installation and Reading	4
Data Analysis	5
Cell Performance	5
Comments	7

ClibPDF - www.fastio.com

ClibPDF - www.fastio.com

Reference: Smith, T. W., Nordlin, E. F., Weber, W. G., Shirley, E. C., Barton, J. E., "Evaluation of Commercial Soil Pressure Cells," State of California, Department of Public Works, Division of Highways, Materials and Research Department. Research Report 636342, May 1968.

Abstract: The installation and performance of several makes of commercial soil pressure cells are reported. The cells varied in size and transducer type and were installed at a depth of about 70' at three sites in embankments. Vertical pressure only was measured.

One make of cell failed due to a sealing problem. However, it was a "first-run" product and the manufacturer was new to the field. The other pressure cells are providing stable readings. Emphasis is placed on the value of proper specifications and acceptance testing. It was felt that an average of readings of several cells was necessary to provide an accurate indication of pressure at a given site. Continuing readings will provide data on long-term performance.

Key Words: Soil pressures, pressure cells, measurements, evaluation, installation, in-situ methods.

ClibPDF - www.fastio.com

ACKNOWLEDGMENTS

This program was conducted jointly by the Foundation and Structural Materials Sections of the Materials and Research Department of the Division of Highways. This study was performed in cooperation with the U. S. Department of Transportation, Federal Highway Administration, Bureau of Public Roads. The opinions, findings, and conclusions expressed in this publication are those of the investigators and the California Division of Highways and are not necessarily those of the Bureau of Public Roads.

ClibPDF - www.fastio.com

INTRODUCTION

The present practice of constructing highway embankments greater than 100 feet in height, coupled with several recent culvert failures in high fills, indicates that more exact information is required concerning the pressures within these soil structures. Such pressure data would be used to review the theoretical formulas for culvert and embankment design, so that these formulas might be modified and used with assurance.

This project was designed to evaluate several makes of commercial soil pressure cells, and to determine,for each, the relative merit and economy in terms of reliability, accuracy, and long-term stability. This report presents the pressure data accumulated during the construction of embankments within which these units were placed, and discusses the performance of the pressure cells during this period. The long-term stability will be reported in three to five years when sufficient data are available.

The pressure cells were installed at three test sites in two embankments to record vertical pressures. Four different makes of pressure cells with varying cell diameters were used in this study. The readings obtained with the cells were compared with the theoretical pressures calculated from the fill height and unit weight of the soil. The performance of the pressure cells was evaluated on the basis of this comparison.

CONCLUSIONS

Pressure cells from one manufacturer failed after a short service life. Failure is attributed to leakage of cell fluid due to a mechanical sealing problem. The basic cause is probably lack of experience on the part of the manufacturer.

Pressure cells from manufacturers with a good experience background are giving stable readings and there are no indications of impending failure.

Readings from individual pressure cells were likely to vary widely from a theoretical reading. The averaged readings from several cells in a group tended to be more accurate.

The calibration method used for the cells in this study is considered adequate for the purposes of the study.

RECOMMENDATIONS

Thorough testing of soil pressure cells, particularly with respect to long-term stability, is mandatory. A sustained test at rated maximum load should be performed to bring incipient failure to light. Other tests should be made to evaluate susceptibility to moisture entry, temperature effects, and other aspects of field performance.

ClibPDF - www.fastio.com

Where specifications are written for the purchase of pressure cells, they should not only include optimum values for the well known design parameters, but also should include acceptance tests to evaluate field performance.

Acceptance testing on a random sample basis is probably sufficient where the cell is a product of a tried and proven method of manufacture. Until a method is tried and proven and quality control is found adequate, acceptance testing of pressure cells should be done on a unit basis.

Where accuracy of pressure measurement is of prime concern in an inherently nonhomogenous fill, sufficient cell groups should be used to give a statistical average.

DISCUSSION

Description of Pressure Cells

All but one of the soil pressure cells used in this study measures the load applied to a circular metal diaphragm which is fixed at its perimeter. As the load is increased, this diaphragm is deflected creating an internal cell pressure. A transducer is incorporated into the system to sense and transmit the magnitude of the pressure. The output can then be correlated with pressure using a calibration procedure. The remaining cell uses a pressure equalization principle, in which the cell diaphragm is expanded by internal pressure until the internal pressure equals the soil pressure.

The Carlson cell operates by a change in electrical resistance, in a strain wire, caused by stressing the cell. This change can be measured with a Wheatstone bridge. The inherent difficulty with the use of the Carlson cell in soils is that the long right angle protrusion of the transducer housing from the plane of the cell could be sheared off if fill movement occurred. To strengthen the housing against this fill shearing action, the Carlson cell used in this study was modified to incorporate a linear variable differential transformer (LVDT) transducer instead of the strain wire transducer. This change allowed the housing to be shortened and strengthened. This modified Carlson cell will be referred to as the LVDT Cell. Carlson cell blanks (the backing plate and diaphragm) were obtained in two sizes, 18 inch and 7-3/8 inch diameter. The LVDT units were mounted in the center of the backing plates. Figures 1 and 19 show the two sizes of LVDT cells and Figure 6 indicates how the transducer is affixed.

The Kyowa soil pressure cell also operates on the strain wire and Wheatstone bridge principle which allows temperature and pressure measurement. However, the instrument housing does not protrude. These cells were also obtained in two sizes, 14-1/8 inch and 7-1/2 inch diameters. The physical characteristics may be seen in Figures 2 and 18, and the transducer arrangement in Figure 6.

The Gloetzl cell functions as a bypass valve in a hydraulic circuit. Fluid is pumped into the system until cell pressure equals soil pressure. At this pressure, a valve opens and the fluid pressure does not increase further. This cell has a 5-1/2 inch diameter and requires a hand-operated pump with attached manometer for a readout unit. Figures 3 and 17 show the cell. The hand pump is shown in Figure 17.

ClibPDF - www.fastio.com

The fourth type of cell evaluated in this study is the 9-1/2 inch diameter Control Service Company cell (CSC). These cells were obtained on an open bid basis in response to specifications issued by the California Division of Highways. The cells constituted a portion of the manufacturer's first production run and, due to pressure of time, had not been tested for specification compliance prior to their installation in this research project. The transducer is a bourdon-tube potentiometer which is connected to the oil-filled space between the diaphragm and the backing plate. The CSC cell may be seen in Figures 4 and 20. The transducer is shown in Figure 5. The cells used represent two pressure ranges, 100 psi and 200 psi.

The dimensions, transducer type, and readout systems for the pressure cells used in this study are summarized in Table I.

Description of Readout Devices

Each type of pressure cell evaluated required a different readout device.

The readout for the LVDT transducers was a modified Baldwin SR-4 strain gage indicator, which weighed about 26 pounds with self-contained batteries. This indicator uses the balanced bridge principle. Since the pressure cells using the LVDT transducers were not intended to be used with cables over 50 feet in length, it was necessary to add an external capacitor to the indicator to correct for the phase shift induced by cable capacitance. This does not completely solve the phase shift problem since the capacitor can shift value in time. Data transmission from an LVDT requires 5 wires and a shield, making a 6-wire hookup necessary. Where an external capacitor is needed for a particular cell, the hookup necessitates handling 8 wires. This lengthens the reading time unless electrical connectors are used.

It was found that the temperature of the Baldwin SR-4 indicator has an effect on the readings of the LVDT equipped pressure cells (see Table 2). With the cell under several feet of fill, at a relatively constant temperature, readings were taken with the indicator at an air temperature of about 100° F and again at about 75° F. The readings at the higher temperature were from 6 psi to 10 psi higher than those at the lower temperature. Extremes in temperature should be avoided when using this equipment.

Readings are taken with the Baldwin unit by nulling an indicator needle with the adjustment knob. The reading is shown on a dial and corresponds to the position of the knob when the needle is nulled.

The Kyowa cells use a Carlson Test Set as a readout. This set weighs about nine pounds including batteries. The Kyowa cells may be calibrated with any length of 4-conductor lead, and are not temperature sensitive. See Table 2.

The Carlson Test Set has two circuits for taking readings of pressure and temperature. The procedure is to zero an indicator needle, depress the appropriate circuit button and balance the circuit with four control knobs. The reading is recorded from the final positions of the balancing knobs. It was noted that temperature variations were insignificant and readings were therefore unnecessary when the cells were

ClibPDF - www.fastio.com

at a relatively constant temperature in the soil. However, such information should be useful in an installation where cell temperature is varying.

The Gloetzl readout unit consists of a hand pump, fluid reservoir and pressure gauge. The apparatus weighs about 30 pounds and can be fitted with various manometers depending upon the range of cell used. The hand pump has two pumping rates, one for filling or charging the system and a slower one for obtaining the pressure required to open the cell valve. Two runs of 1/4-inch tubing to the cell are used, one for pressure and the other as a return line. The cell itself was not calibrated, but the pressure gage used was checked against a dead weight tester. The length of tubing used does not appear to appreciably affect the results. When the line and cell are charged, the pumping rate is slowed, and the reading obtained from the manometer on the readout unit. More instruction was necessary in the use of this readout than for the others, and the operators needed to acquire a technique in its use.

The Control Service Company readout, Model 658, is basically a voltmeter. It weights about four pounds with power supply included. The transducer is a Bourdon tube attached to the slider of a potentiometer. It acts as a voltage divider and the readout shows the output voltage as a percentage of the voltage supplied. The output voltage is thus proportional to pressure. The cable is of the three conductor type and the cell may be calibrated with any length of cable with no significant change in reading. The readout is operated by first adjusting its meter to read 100. This is done by turning a potentiometer knob. Reversing a switch then allows the reading to be obtained.

In a comparison of the readout units, weight and bulk constitute shortcomings for the Gloetzl and Baldwin units. These considerations are important when the only access to an instrumentation shelter is by walking down a rough slope. The Carlson and Control Service Company readouts lack an indicator to show that the batteries are supplying an adequate operating voltage. Finally, the Baldwin unit is temperature sensitive.

Calibration

All the cells involved in this study with the exception of the Gloetzl, were calibrated in a similar manner by applying load to the cells with a metal frame and hydraulic jack arrangement (Fig. 16). The load was applied to the pressure cell using a spherically seated bearing block to eliminate eccentricity. Hardwood blocks were placed on each side of the cell. The applied load was measured by an electronic load cell and readout system. Knowing the area of the cell diaphragm, the load was converted to pressure and a calibration curve drawn.

Installation and Reading

The test sites were located in through fills on a portion of Interstate 5 under construction in northern Los Angeles County. Test sites one and two were in Osito Canyon, and test site three was in No Name Canyon. Cross-sections of the fills with the test sites and recorded in-place wet densities indicated are shown in Figures 11 and 12. The height of fill directly over the test sites is about 70 feet.

ClibPDF - www.fastio.com

Each test site was prepared in a similar manner. After a motor grader scraped and smoothed an area at least six inches below the deepest penetration of the compaction rollers, a site was chosen that appeared to be uniformly compacted and free of surface rocks. A layer of sand was then placed over the site. This layer was between one inch and one-half inch in thickness and provided uniform seating for the cell diaphragms.

A cluster of cells was placed at each site. At sites one and two, the clusters consisted of two LVDT cells in different diameters, two Kyowa cells in different diameters, and a Gloetzel cell. At site three, the cluster consisted of the same cells and, in addition, two Control Service Company cells with different load ratings.

These cells were placed horizontally to measure the vertical pressure. One foot or more clearance was allowed between adjacent cells. A reading was obtained from each cell to insure it was working properly before a six-inch cover of sand was placed over it. The sand was moist, and additional water was applied, as the sand was being placed, to obtain compaction. A clayey sand layer six inches in depth was then placed over the sand and sprinkled with water. Preliminary compaction was obtained by walking over the area. Next, one foot of the same material was placed, watered, and compacted with a hand-guided impact compactor. Readings were again obtained from the cells to ensure that the backfilling had not damaged them and to obtain a zero reading. The cells were monitored until the readings became constant, indicating that the cells had reached equilibrium temperature with the surrounding soil. In this manner, no temperature correction was required for the zero reading. Any load registered above this equilibrium reading was considered as soil pressure. Figures 7 and 21 show the above operation.

As the fill progressed in height, readings were taken at increments of twenty feet of fill. When the fill reached profile grade, readings were obtained at longer intervals to check cell stability.

Data Analysis

Pressure readings with respect to time were plotted on charts, Figures 8, 9 and 10. The solid line represents calculated theoretical fill pressure. This value was obtained by multiplying the average wet density times the height of fill over each site. No correction was made for the effect of the fill slope on the pressure.

A different presentation of the data is shown in Figures 13, 14, and 15. In these graphs one can see how the pressure indicated by the cell compares to the calculated theoretical pressure. The solid line at 45 degrees represents the theoretical pressure versus fill height relationship.

Cell Performance

The large diameter LVDT cell at site one followed the theoretical pressure with very little deviation. At site two it showed a very slight trend from the theoretical toward over-registration and the individual measurements showed more scatter. The line of best fit (visually) for the data at site three, plotted with respect to theoretical pressure, tends to be slightly cuvilinear. There is very little scatter from this line and the line

ClibPDF - www.fastio.com

shows an over-registration of about 90%. Data shown on the pressure-time plot in Figure 8 indicate a drop in pressure occurring at a pressure of about 80 psi. Closer inspection reveals a similar plot configuration, at this point in time, for sites one and two. Apparently, on this date, the readout caused this error through faulty adjustment or the effects of a variation in ambient temperature.

The small diameter LVDT cell over-registered at all three sites. Straight lines were the best fit for the data at sites one and three, while the site two data were slightly curvilinear. A small amount of scatter in the data was apparent at all three sites. Over-registration amounted to about 56% of the theoretical pressure at site one, 65% at site two, and 73% at site three.

An over-registration of about 10% was found in the large diameter Kyowa cell at site one. The data were best fit by a straight line and there was little scatter. At sites two and three the data were curvilinear. An over-registration up to 50% with substantial scatter in the points was found at site two while site three data gave an over-registration up to 24% with somewhat reduced scatter for the individual measurements.

The smaller diameter Kyowa cell data from site one fit a straight line fairly well with a small amount of scatter, but the cell under-registered about 24%. The data from sites two and three required curvilinear lines for a best fit. At site two, the cell over-registered as much as 22%, with little scatter, as the indicated pressure ranged upwards to about 65 psi. At this point the cell began to under-register and at completion of the fill was about 20% below the theoretical. At site three, there was very little scatter in the data and the cell over-registered as much as 72%.

The Gloetzl cell at site one followed the theoretical pressure almost perfectly. At site two, the data became slightly curvilinear and at site three, more curvilinear. In all cases there was little scatter in the data. The cell at site two under-registered up to 25% and at site three over-registration up to 100% was found.

Both of the Control Service Company cells failed early in the project. The data provide an almost classic example of what would be expected with a leaking cell. The pressure-time graph for these cells shows over-registration occurring during the period when there was a high rate of fill construction. When the construction rate leveled off, the indicated pressure decreased, in one case actually showing under-registration. Again the rate of fill placement picked up and again the cells over-registered. This time the 100 psi cell showed as much as 55% over theoretical pressure and the 200 psi cell was over by as much as 170%. When the embankment reached grade, the cells began to register a drop in pressure. At the last reading, the 100 psi cell was indicating 3 psi and the 200 psi cell was indicating 60 psi.

The most logical explanation for this performance is that leakage was occurring. The rate of leakage from the 100 psi cell was greater than that from the 200 psi cell. The leakage from both cells occurred at a rate low enough to be overshadowed by the fill construction rate, when that rate was high.

ClibPDF - www.fastio.com

Since these two cells were obtained, the manufacturer has placed the large, bulky transducer housing with a shorter, more compact unit.

Comments

The method of calibration used in relating the transducer output to pressure in this study was a compromise. The ideal condition would be to calibrate the cells in a soil mass of the same characteristics as the soil mass in which they are to be placed. Since this is not a practical procedure, the method discussed earlier was used.

In the field installation, the pressure cells were bedded in a clean sand. As only the stress in the vertical direction was being measured, this is thought to be a satisfactory method of installation which is fairly commensurate with the calibration procedure.

In the calculation of the theoretical loading pressures, the effect of the fill slope was not considered. The fill was assumed to be level as the embankment was raised above the plane of the cells. As may be seen in Figures 8, 9 and 10, there was a tendency in the majority of the cells to indicate a very slight rise in pressure until the embankment was completed. For the studies in this report, it is felt that any error introduced by this assumption would be constant for all the cells and of little significance.

All the cells placed at site three tend to over-register. The reason for this is unknown, but it is felt that several things might contribute. First, the embankment material at No name Canyon had a considerably higher percentage of larger size rock than did that at Osito Canyon. Large rock causes the average density to be greater than that shown by test since the tests are made in the finer portions of the fill. This density difference would be greater at No Name Canyon. Another factor might be that the select material used for backfilling the test sites had changed in the year between the installations in Osito and No Name Canyons. It is also probable that the relative compaction of the backfill over the cells at site three was higher than that of the surrounding fill. This condition would contribute to over-registration at the site due to disparity of deformation moduli.

With the exception of the small LVDT cell at site one, all the cells, showing a departure from theoretical pressure, did tend to follow the theoretical line up to about 10-20 psi. The reason for a shift of this sort is not known. It has been hypothesized that a shift in zero reading might occur due to changes in transducer characteristics. That this would happen to many cells at the same time, however, is doubtful. The cells which follow the theoretical line and then depart to under-register might be showing the effect of a change in cell alignment with respect to the major principal stress.

In summing the readings for each site, it was found that over-registration is also the rule at sites one and two. At these locations, however, it is minor and is probably due to inaccurate estimates of fill density. As explained earlier, the tests, on which density calculations were based, were made in the finer portions of the fill.

ClibPDF - www.fastio.com

In general, the cells having either large diameter or a diameter-thickness ratio of 10 or greater gave readings closer to theoretical than did the smaller or lower ratio cells. This observation lacks statistical validity, however, since the effects of these and other parameters such as size of transducer protrusion, diameter-diaphragm deflection ratio, unit load-diaphragm deflection ratio, and site differences cannot be separated.

The importance of thoroughly testing pressure cells prior to installation cannot be overemphasized. This is amply illustrated by the failure of the two cells in this study. Pressure cell specifications should not only include optimum values for the parameters listed above, but also should include acceptance tests designed to evaluate field performance of the unit. These tests should, at least, evaluate the watertightness of the cell and cable, strength of the cable-to-transducer connection, effects of temperature change upon the transducer output, and the ability of the cell to maintain uniform output under a sustained maximum design load.

This latter test should last for, probably, not less than a week. Random readings taken over the test period will provide an indication of the long-term stability of the cell.

The temperature induced variation which occurred with the LVDT cell readout unit illustrates the importance of obtaining full knowledge of system performance. If the readout unit is already on hand, the system should be evaluated with regard to environmental factors as well as accuracy and repeatability. If it is to be purchased with the pressure cells, specifications for the system should be written to incorporate these items.

Earth pressures measured with soil pressure cells are not exact values. There are point to point variations in the pressure due to the heterogeneous nature of the soil mass. Although caution was used to minimize this effect in the study, it does exist. Also, the cells are foreign bodies in the soil mass and do not deform the same as soil when the pressure changes. The study seems to indicate that, although some individual cells were quite accurate, a more reliable indication of pressure is obtained by averaging readings from several cells. This will tend to minimize the effects of soil heterogeneity and cell placement.

Finally, one of the primary purposes of the study was to determine the applicability of the modern commercially made soil pressure cell to the stable, long-term measurement of soil pressure. The results of the study, to date, indicate that cells made by tried and proven methods of manufacture, with adequate quality control, will produce stable readings over a fairly long period of time. The study of this particular installation will continue for several years with the taking of periodic readings. The final evaluation, at the end of this period, will present data on continuing long-term stability. The data will also be analyzed to provide a statistical presentation of individual system repeatability.

ClibPDF - www.fastio.com

TABLE NO. 1

SOIL PRESSURE CELLS USED IN EVALUATION STUDY

Name	Rated Load (psi)	Thickness	Diameter	Diameter-Thickness Ratio	Type of Readout	Type of Transducer
CSC	100	0.75"	9.5"	12.7	Voltmeter type indicates percentage of applied voltage	Bourdon type potentiometer
CSC	200	0.75"	9.5"	12.7	Ditto	Ditto
Gloetzl	400	0.187"	5.5"	29.4	Manometer	None
Kyowa	100	1.25"	7.5"	6.0	Wheatstone bridge type	Strain wire
Kyowa	100	1.50"	14.125"	9.4	Ditto	Ditto
LVDT cell	100	1.063"	7.375"	6.9	Modified SR-4 strain gage indicator	Linear variable differential transformer
LVDT cell	100	1.125"	18.0"	16.0	Ditto	Ditto

ClibPDF - www.fastio.com

TABLE NO. 2

EFFECT OF AMBIENT TEMPERATURE VARIATION UPON PRESSURE CELL-READOUT SYSTEM

Ambient Temperature*	A** 102° F	A** 76° F	B 100° F	B 78° F	Readout Unit
Pressure Cell					
Control Service Co. 100 psi	--	--	38 psi	38 psi	CSC Test Set
" " " 200 psi	--	--	50 psi	50 psi	" " "
Goetzl	43.0 psi	43.0 psi	63.5 psi	63.5 psi	Manometer
Kyowa 7-1/2"	46 psi	47 psi	54 psi	55 psi	Carlson Test Set
" 14-1/2"	66 psi	66 psi	76 psi	76 psi	" " "
LVDT 7-3/8"	99 psi	91 psi	114 psi	103 psi	Modified Baldwin SR-4 Indicator
" 18"	66 psi	59 psi	77 psi	70 psi	" "

*Temperatures were taken in air on the surface of the readout units. The readout units remained at each temperature at least one hour prior to taking readings. The pressure cells were under a substantial amount of fill and were at a relatively constant temperature.

** A and B represent different fill heights.

ClibPDF - www.fastio.com

Figure 1

MODIFIED CARLSON $7\frac{3}{8}$" CELL

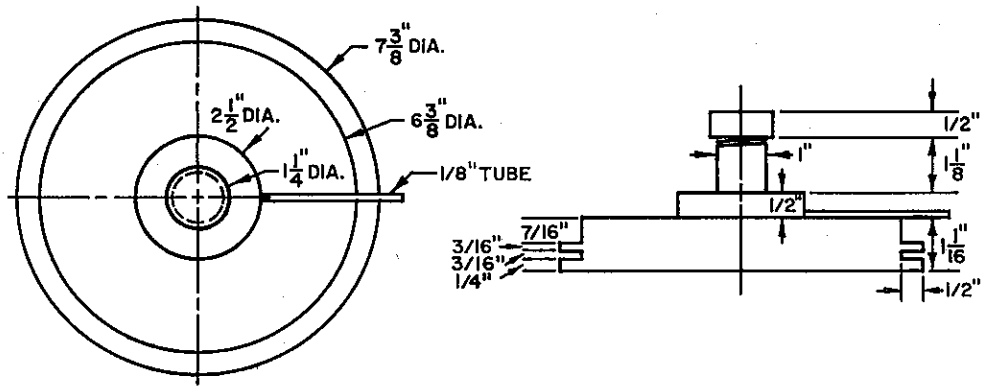

SCALE PROPORTIONATE

MODIFIED CARLSON 18" CELL

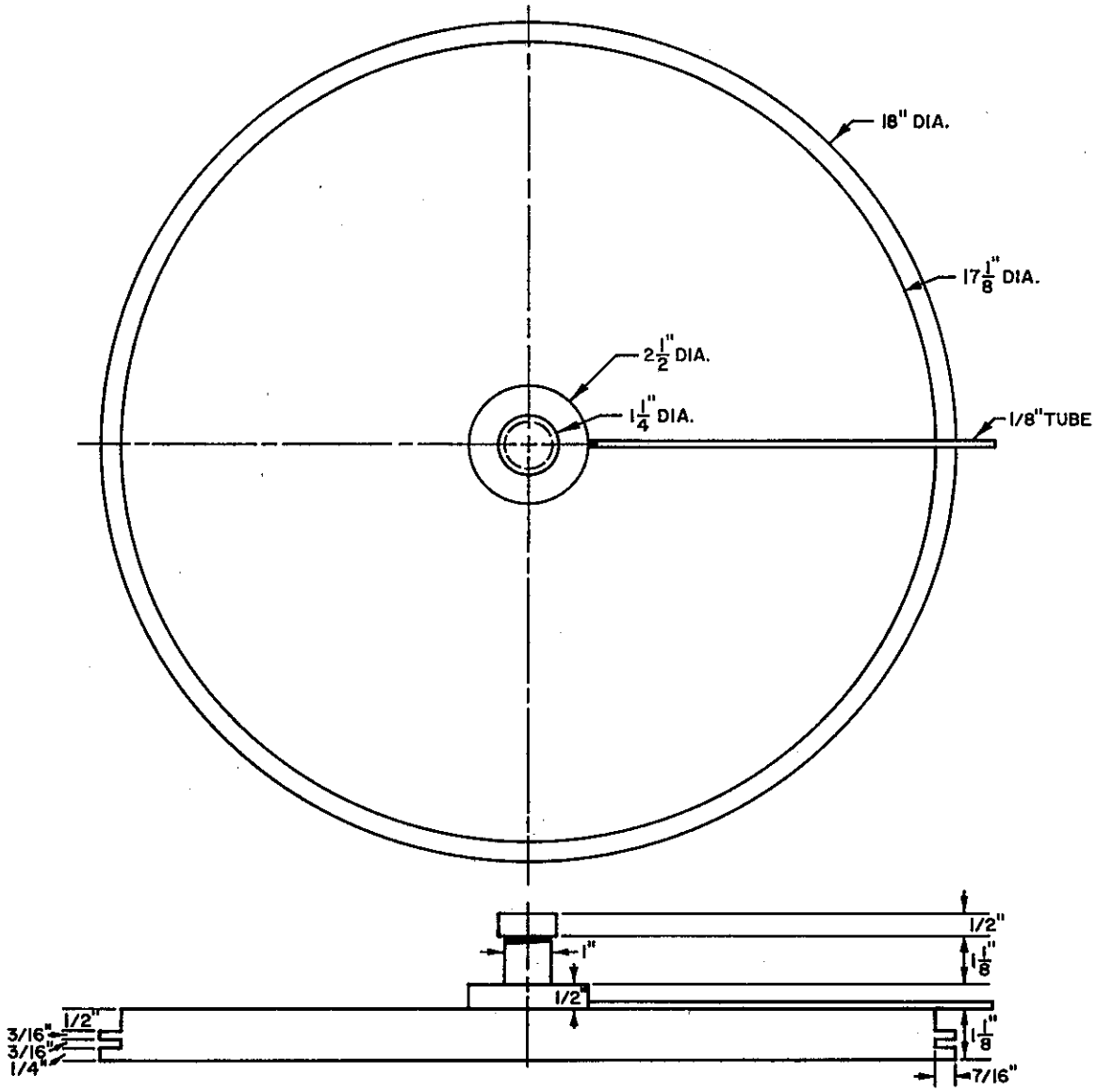

ClibPDF - www.fastio.com

Figure 2

KYOWA $7\frac{1}{2}''$ CELL

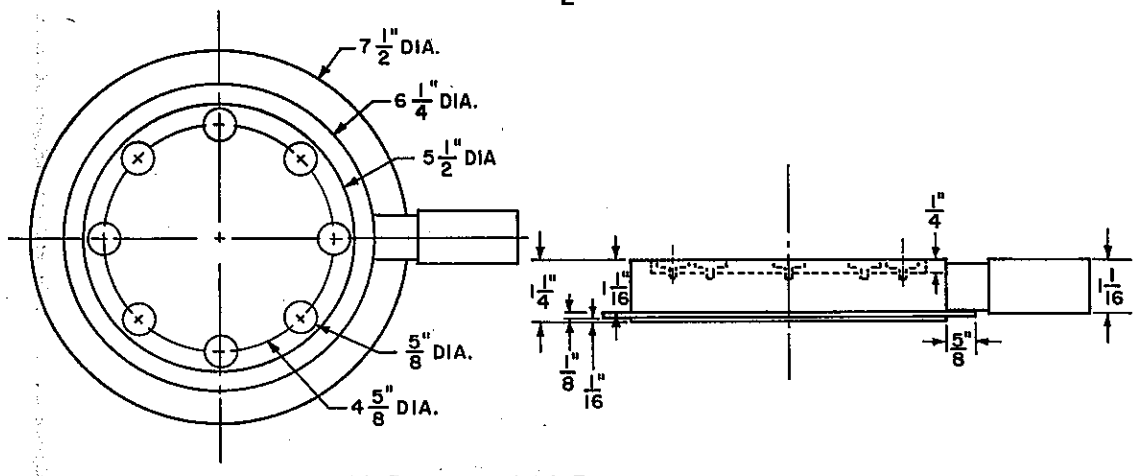

SCALE PROPORTIONATE

KYOWA $14\frac{1}{8}''$ CELL

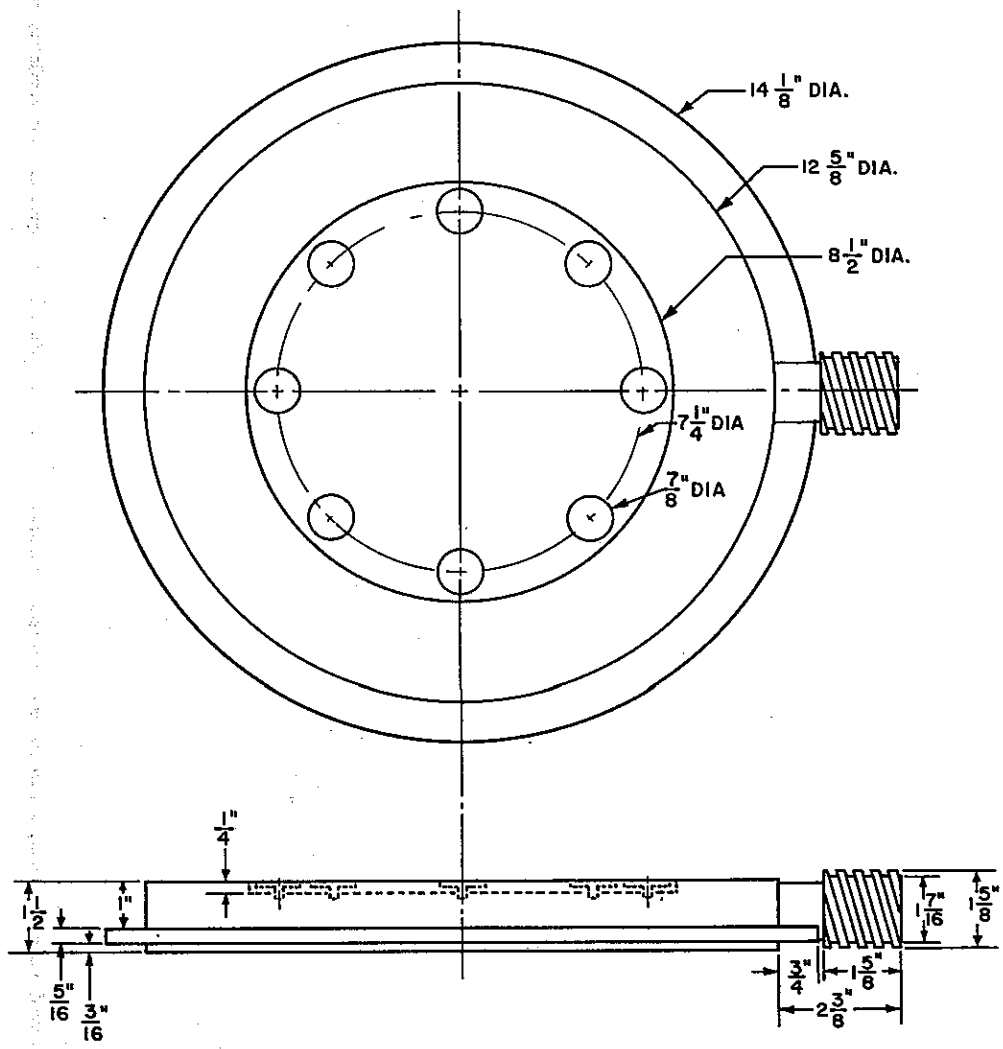

ClibPDF - www.fastio.com

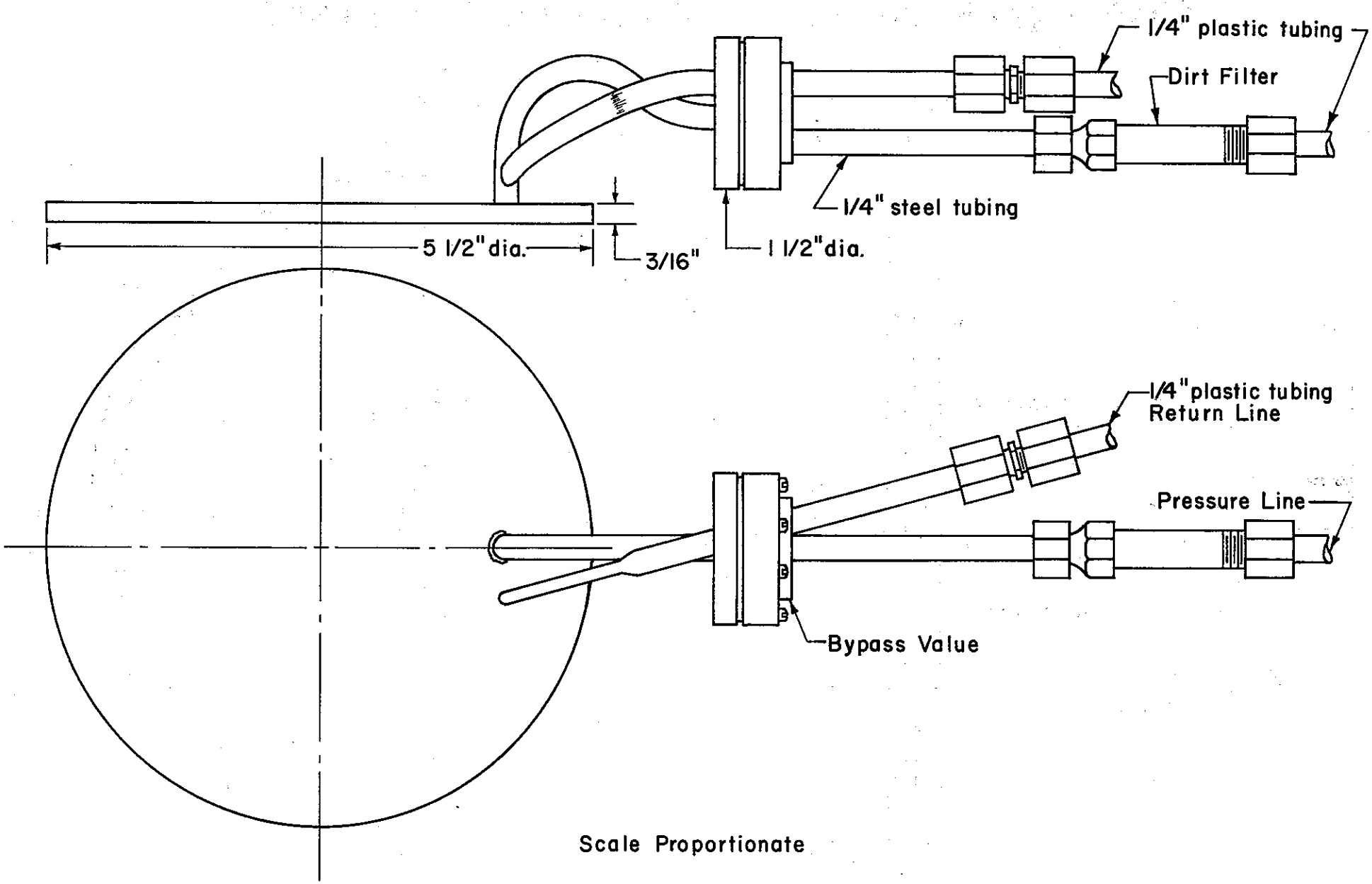

Scale Proportionate

GLOETZL EARTH PRESSURE CELL

Figure 3

ClibPDF - www.fastio.com

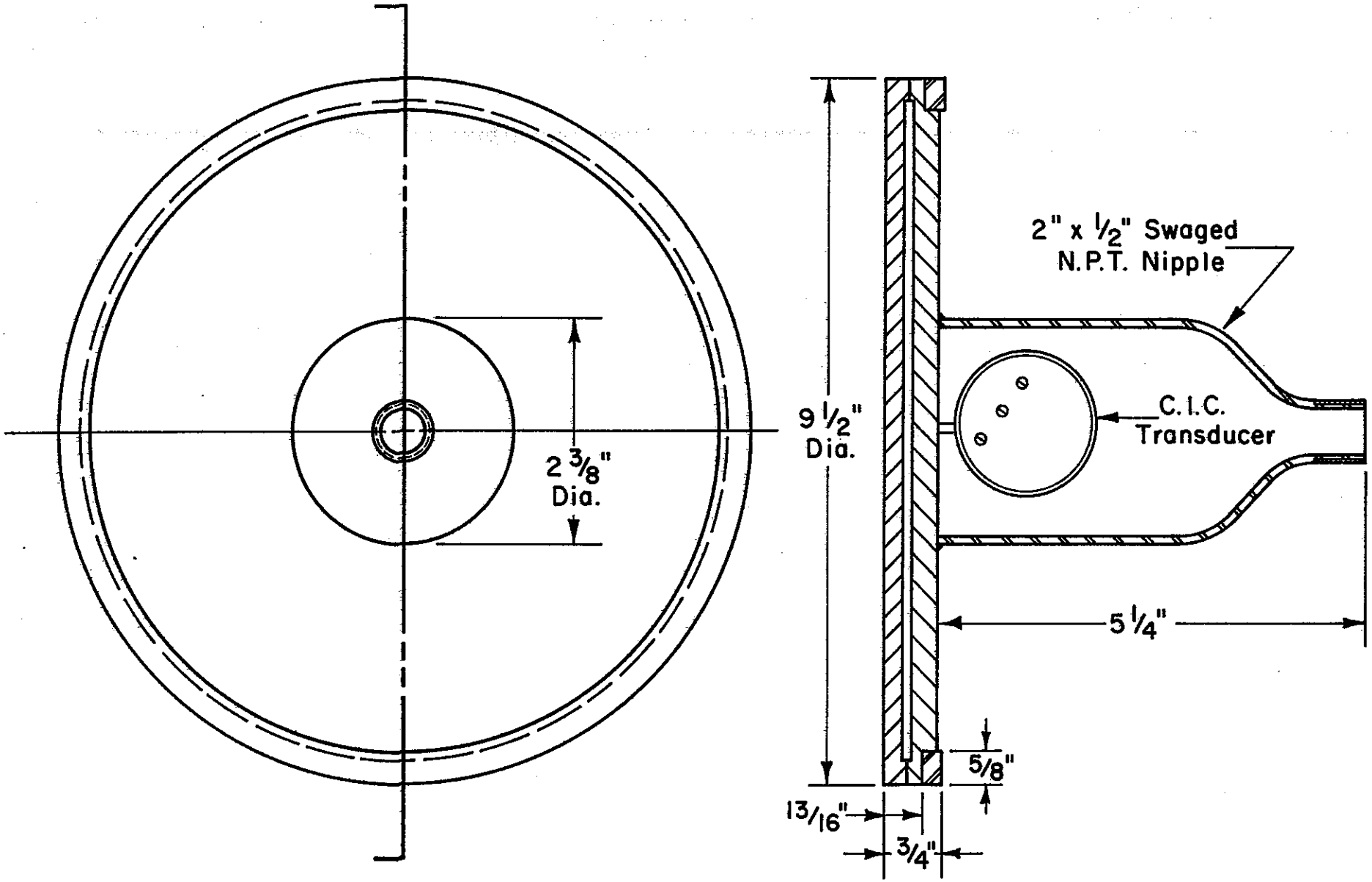

Figure 4

CONTROL SERVICE CO. EARTH PRESSURE CELL

ClibPDF - www.fastio.com

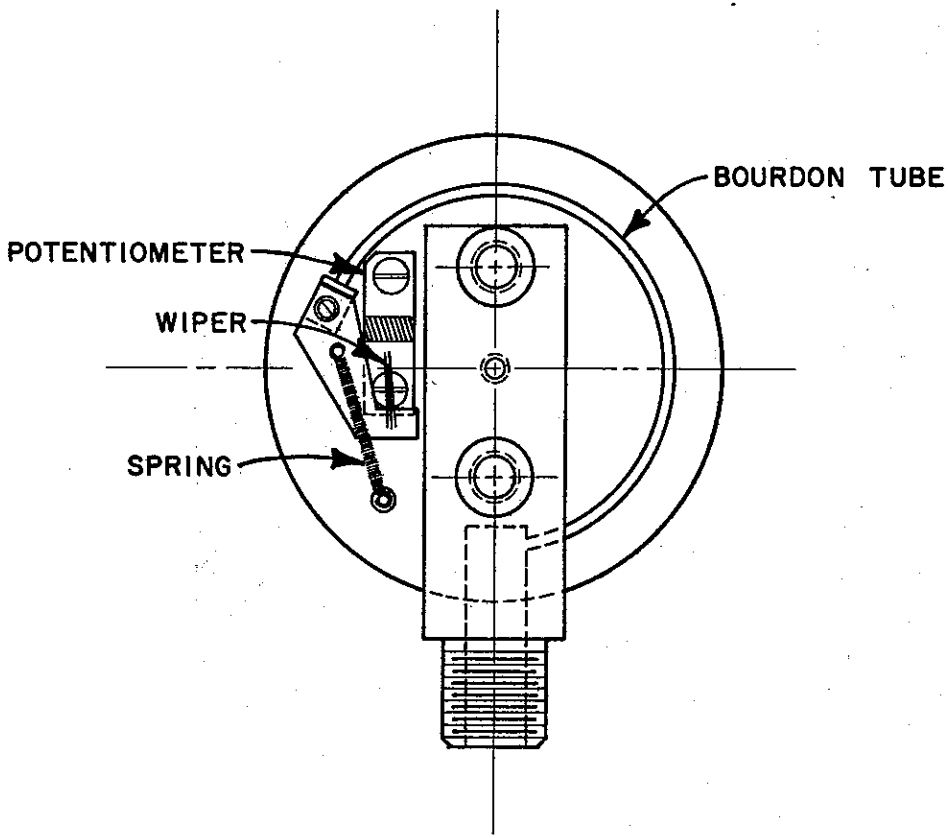

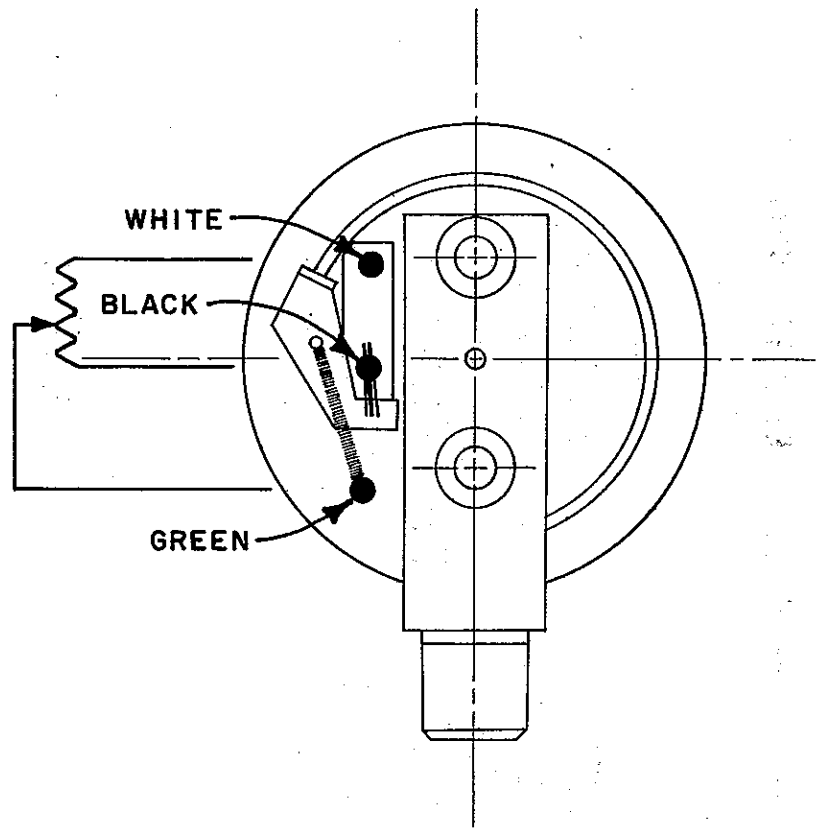

WIRING DIAGRAM

Figure 5

CIC TRANSDUCER — USED IN CSC PRESSURE CELLS

ClibPDF - www.fastio.com

Figure 6

KYOWA PRESSURE CELL TRANSDUCER

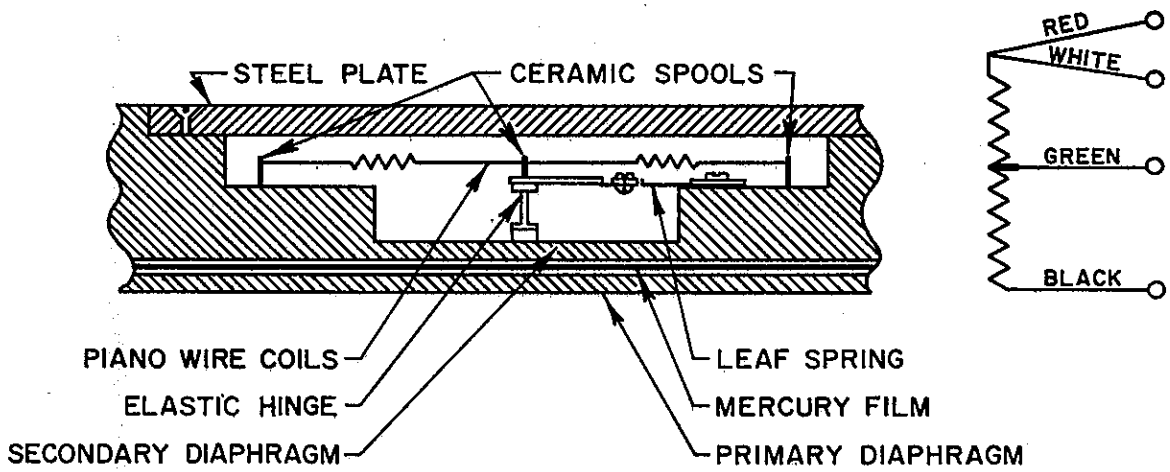

MODIFIED CARLSON PRESSURE CELL WITH LVDT TRANSDUCER

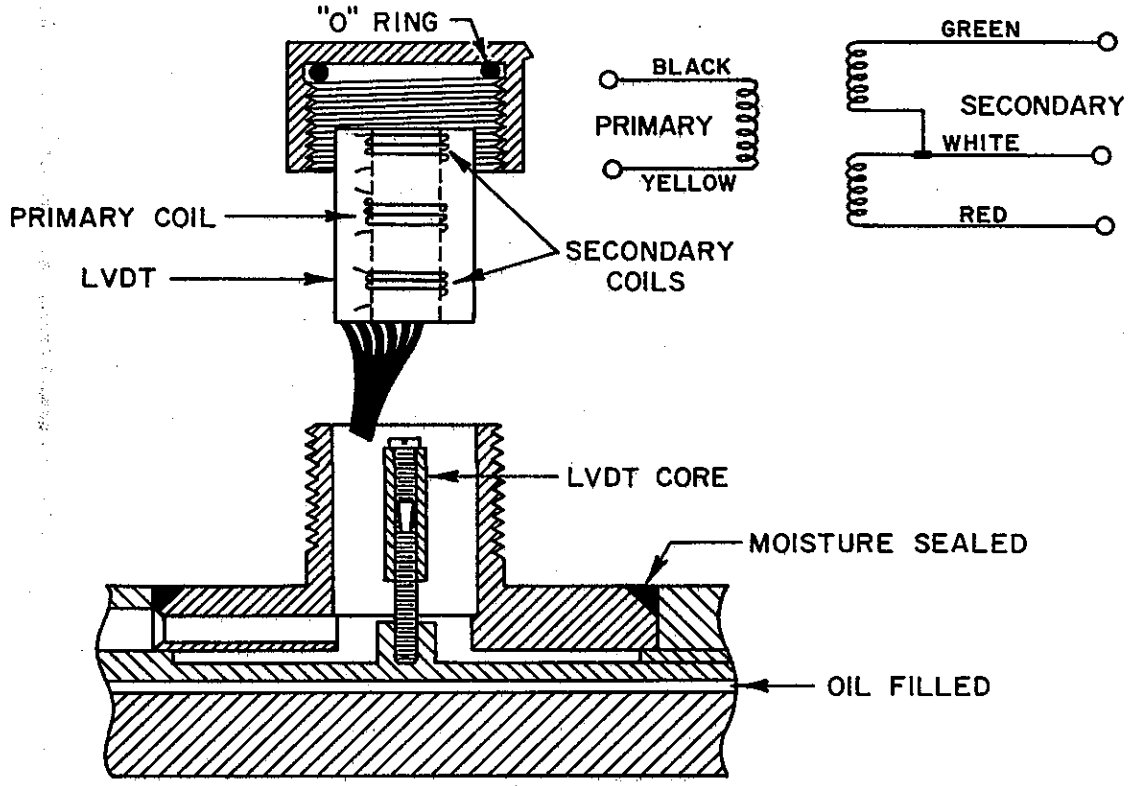

ClibPDF - www.fastio.com

TYPICAL CELL PLACEMENT IN TEST SITES

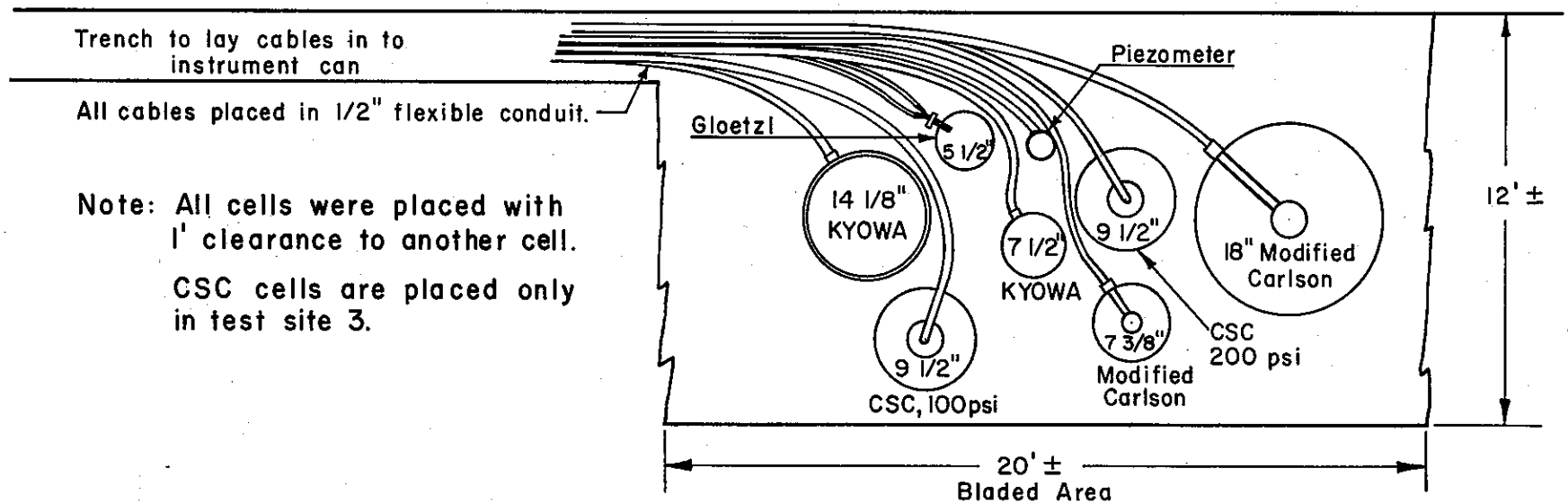

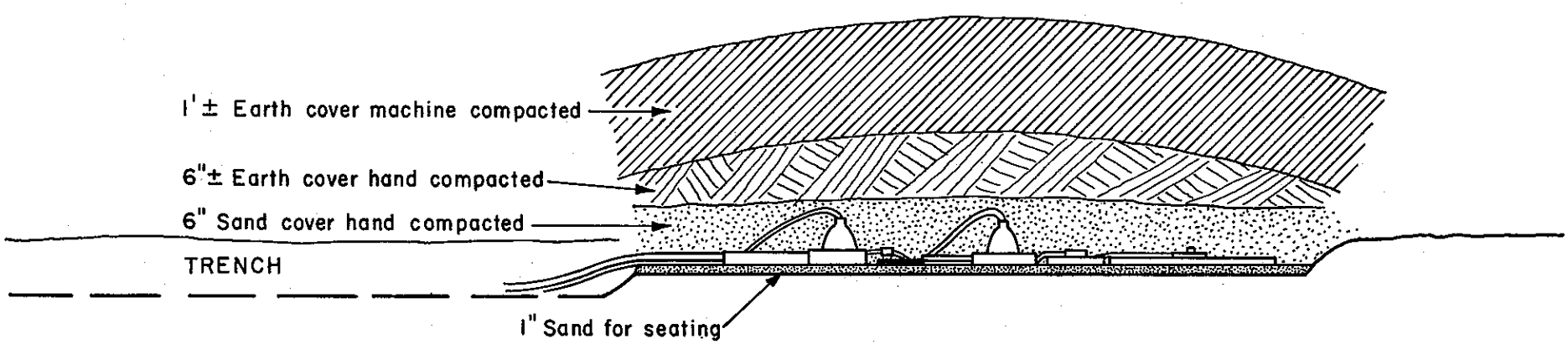

Figure 7

ClibPDF - www.fastio.com

Figure 8

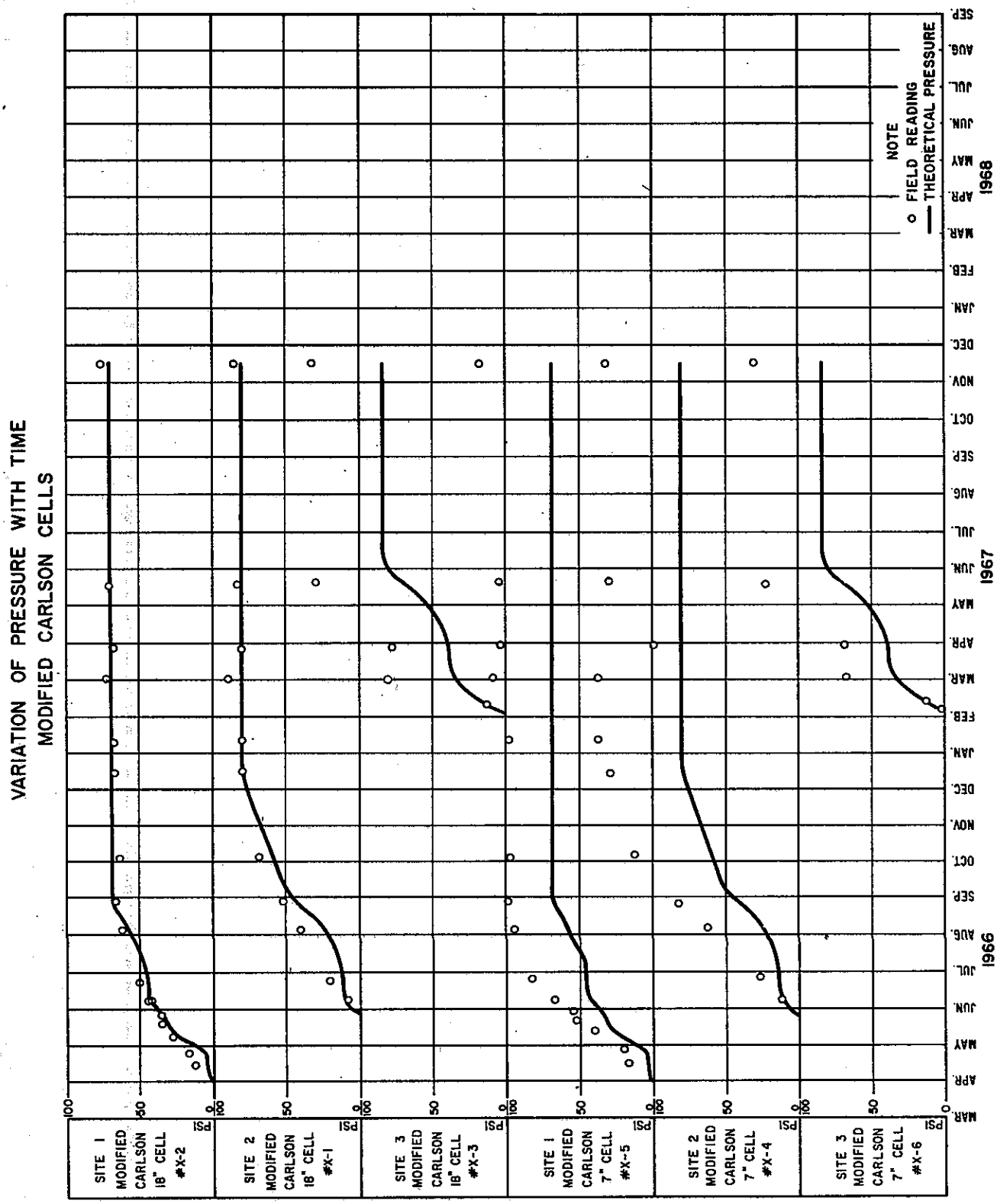

ClibPDF - www.fastio.com

Figure 9

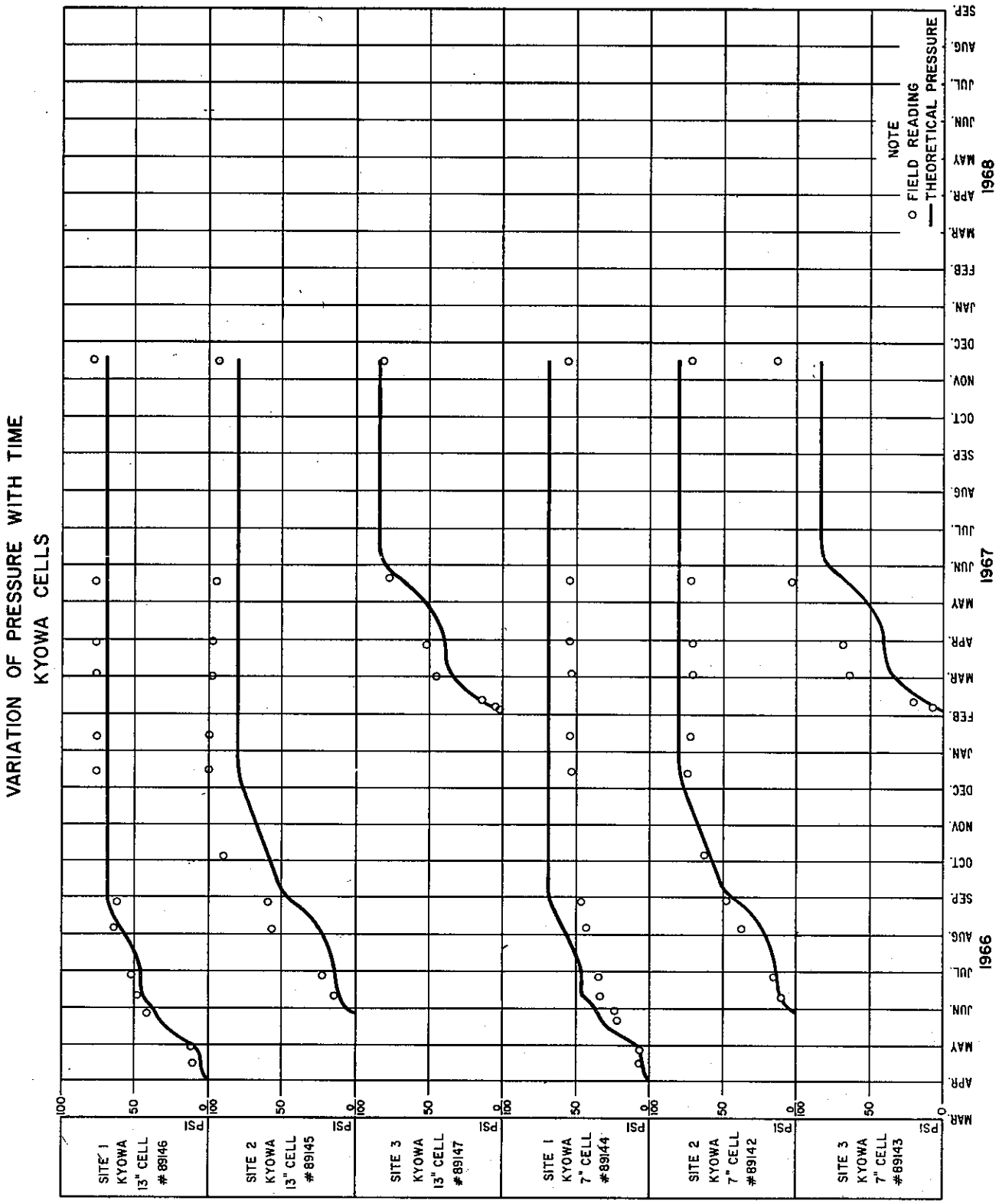

ClibPDF - www.fastio.com

Figure 10

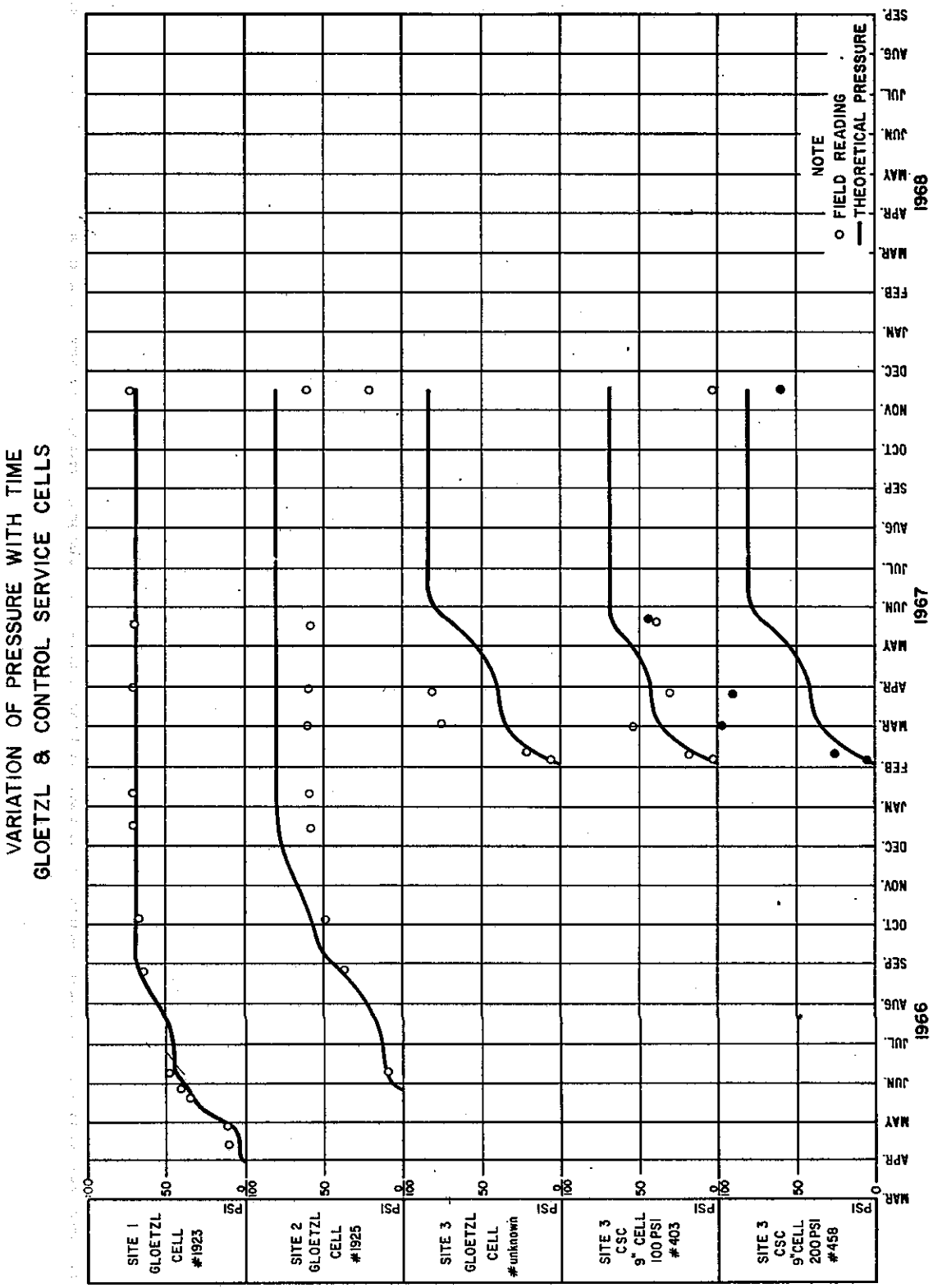

ClibPDF - www.fastio.com

ClibPDF - www.fastio.com

CROSS SECTION - OSITO CANYON

TEST SITES ONE AND TWO

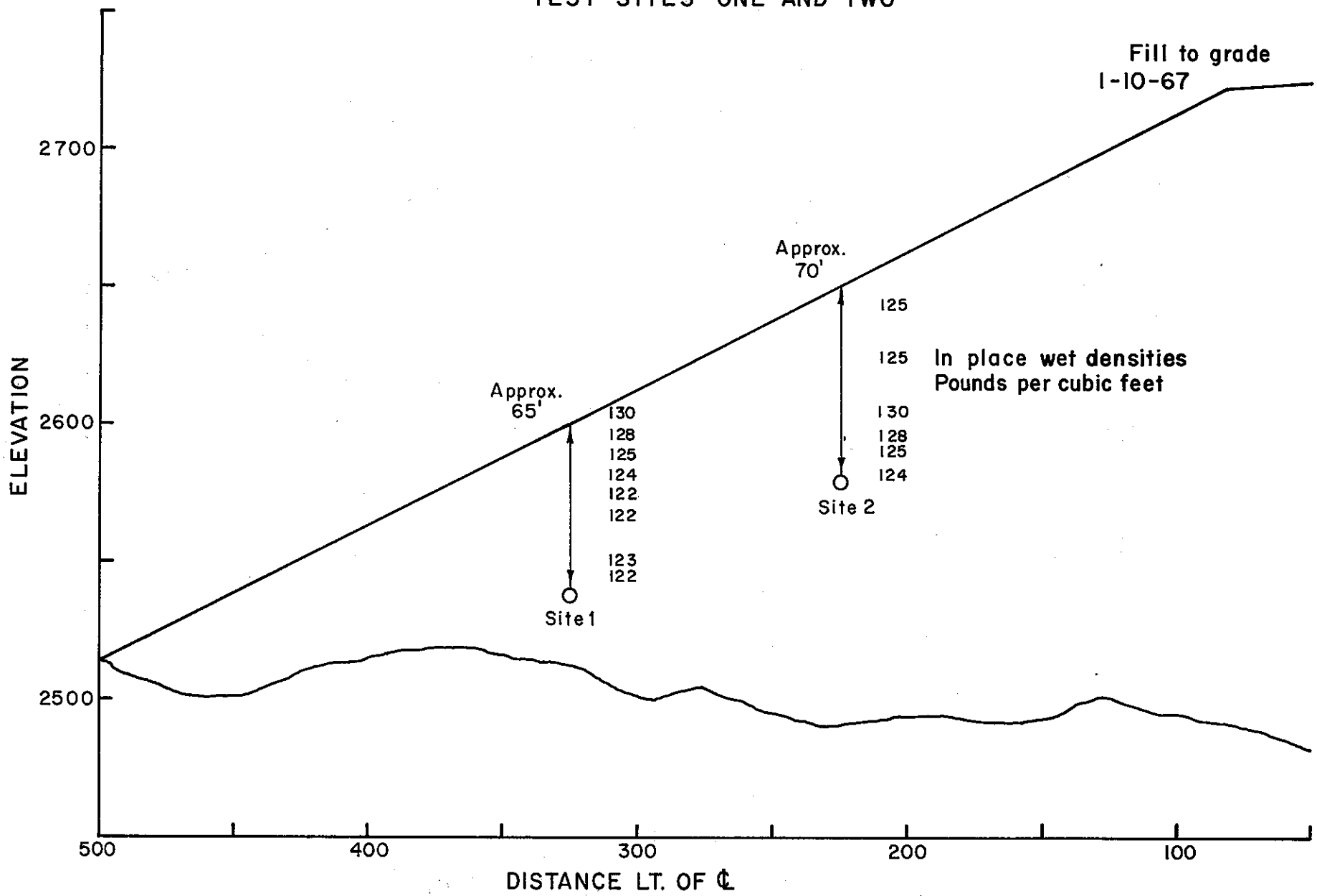

Figure 11

ClibPDF - www.fastio.com

CROSS SECTION - NO NAME CANYON

TEST SITE THREE

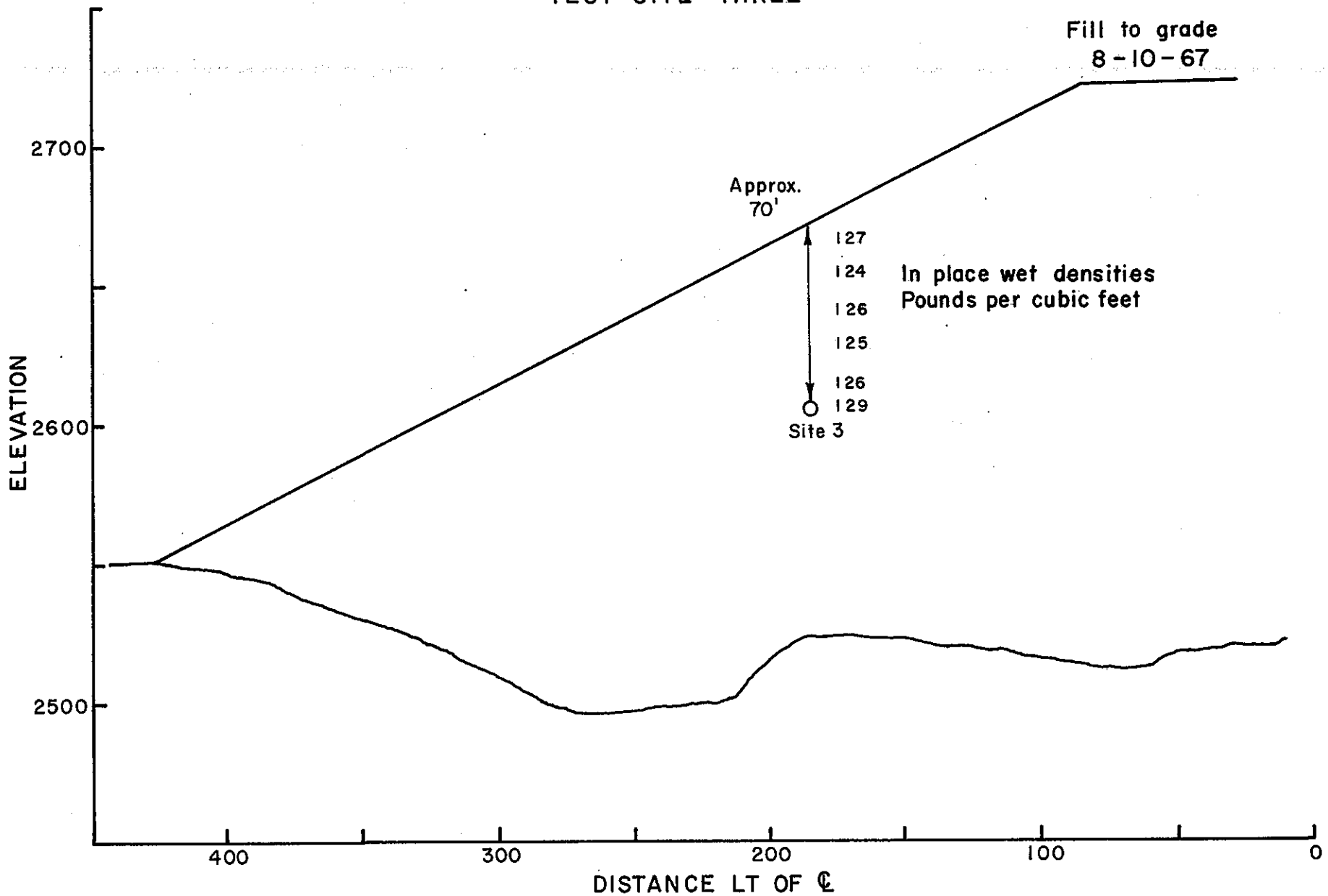

Figure 12

COMPARISON OF THEORETICAL AND MEASURED PRESSURES

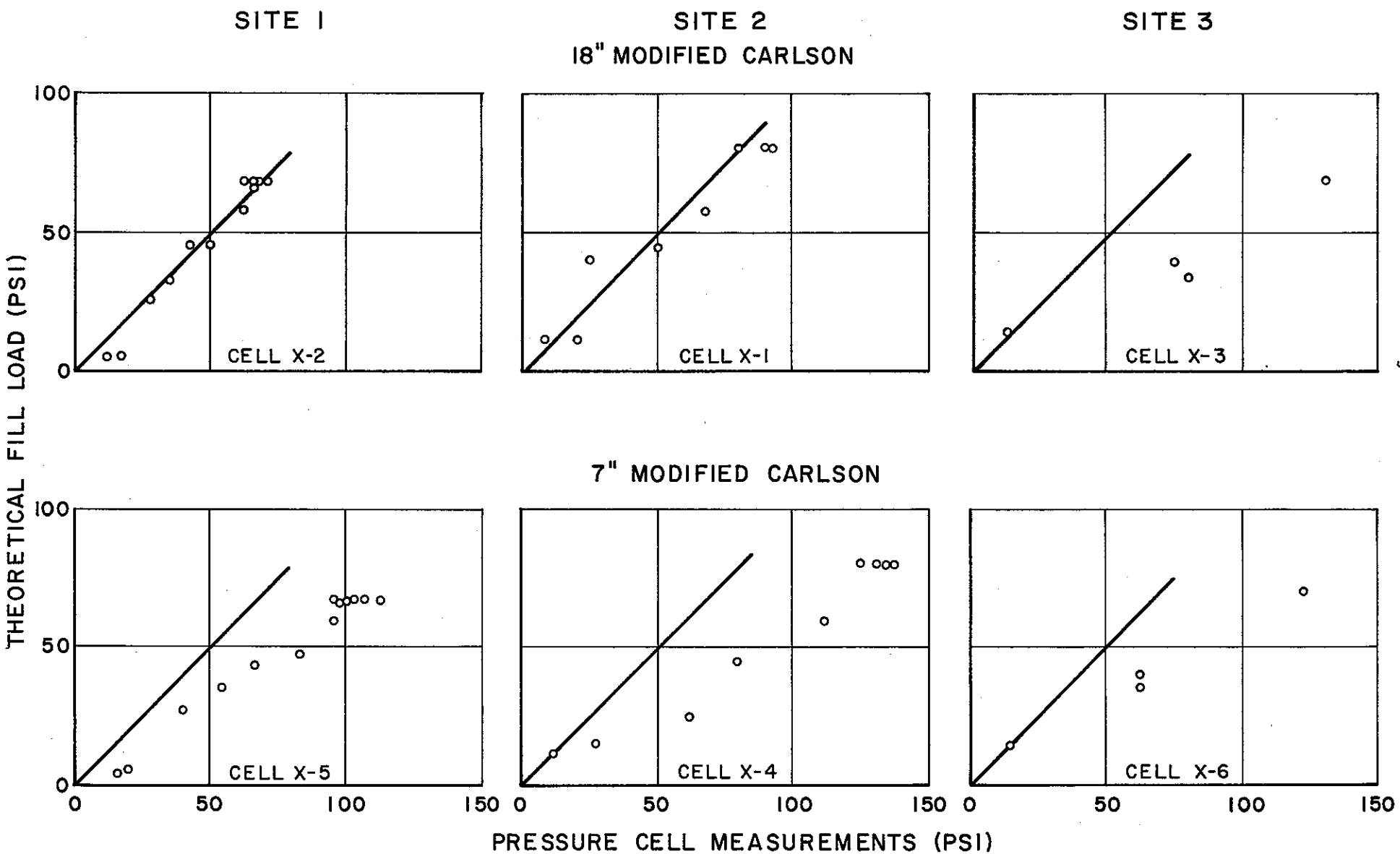

Figure 13

ClibPDF - www.fastio.com

ClibPDF - www.fastio.com

COMPARISON OF THEORETICAL AND MEASURED PRESSURES

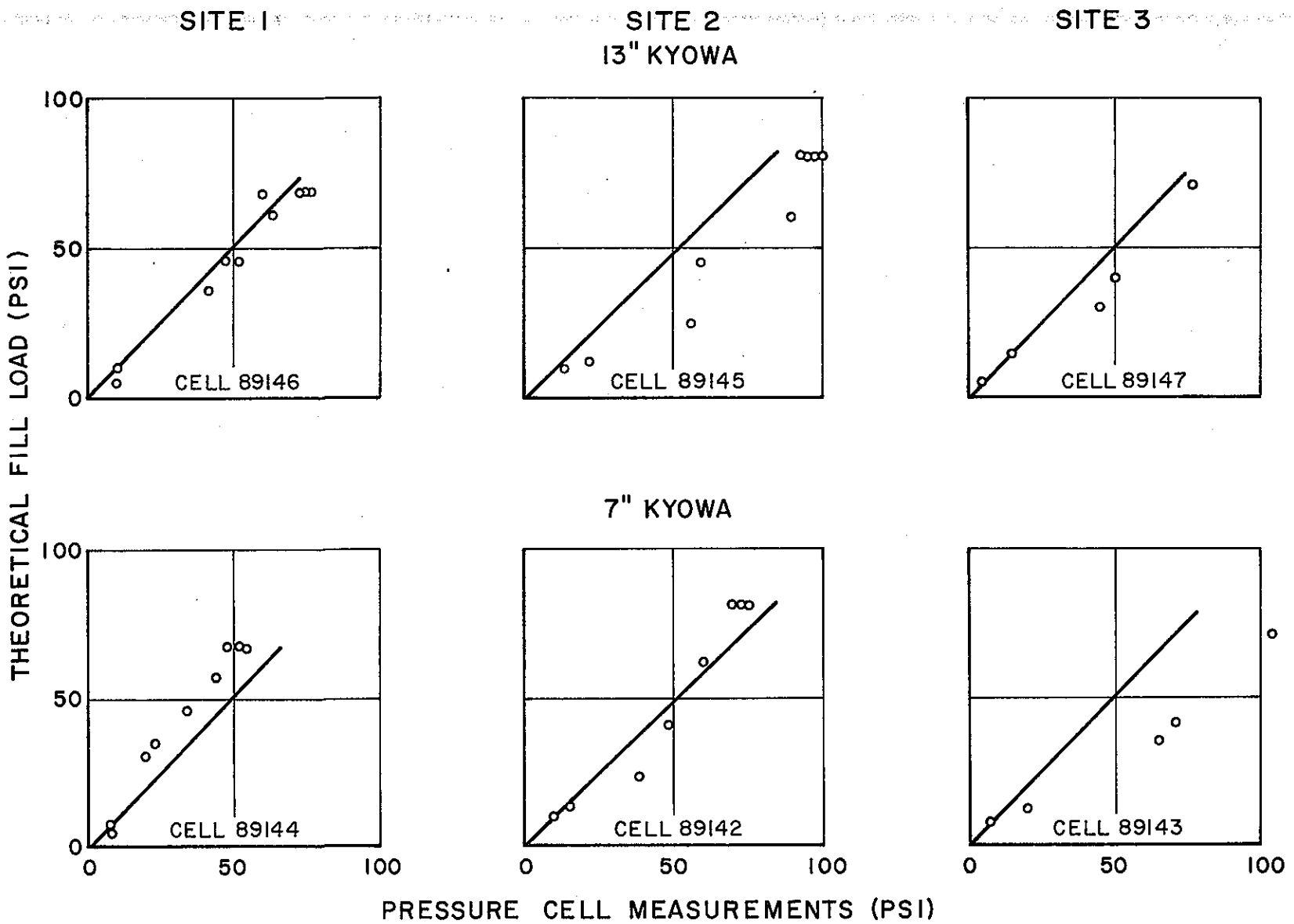

Figure 14

ClibPDF - www.fastio.com

COMPARISON OF THEORETICAL AND MEASURED PRESSURES

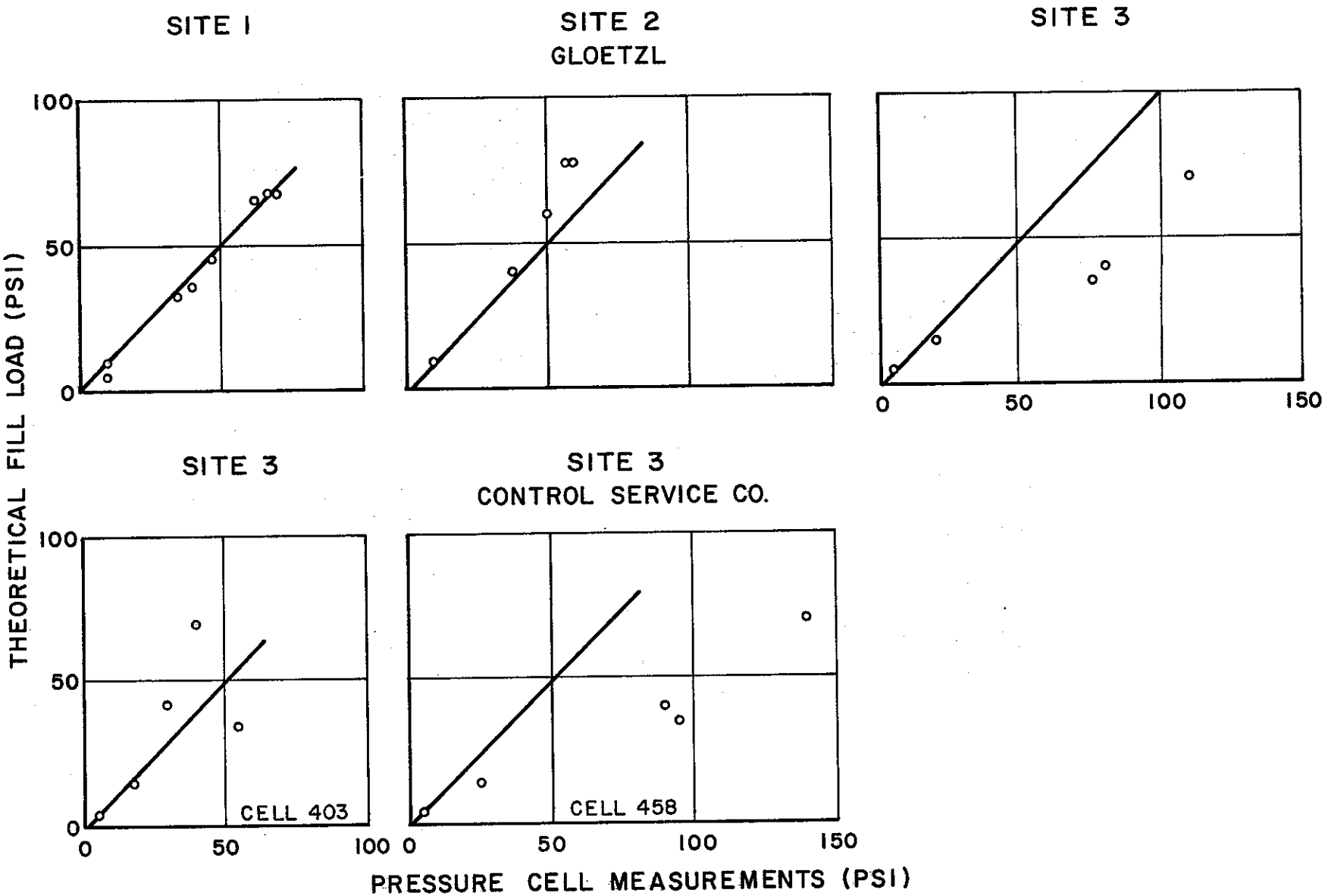

Figure 15

Figure 16

Calibration of Pressure Cells

ClibPDF - www.fastio.com

Figure 17

Gloetzl Cell

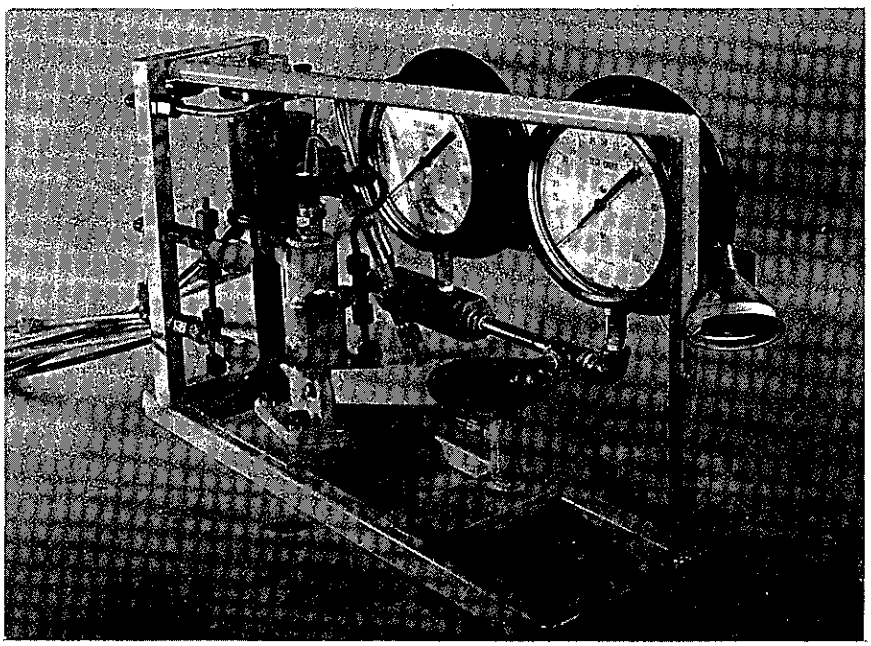

Readout Device

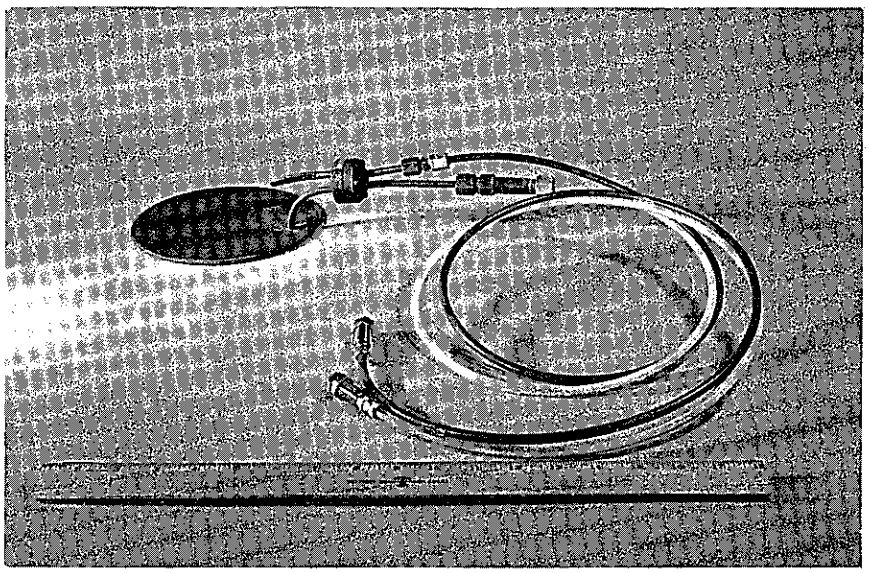

Pressure Cell

ClibPDF - www.fastio.com

Figure 18

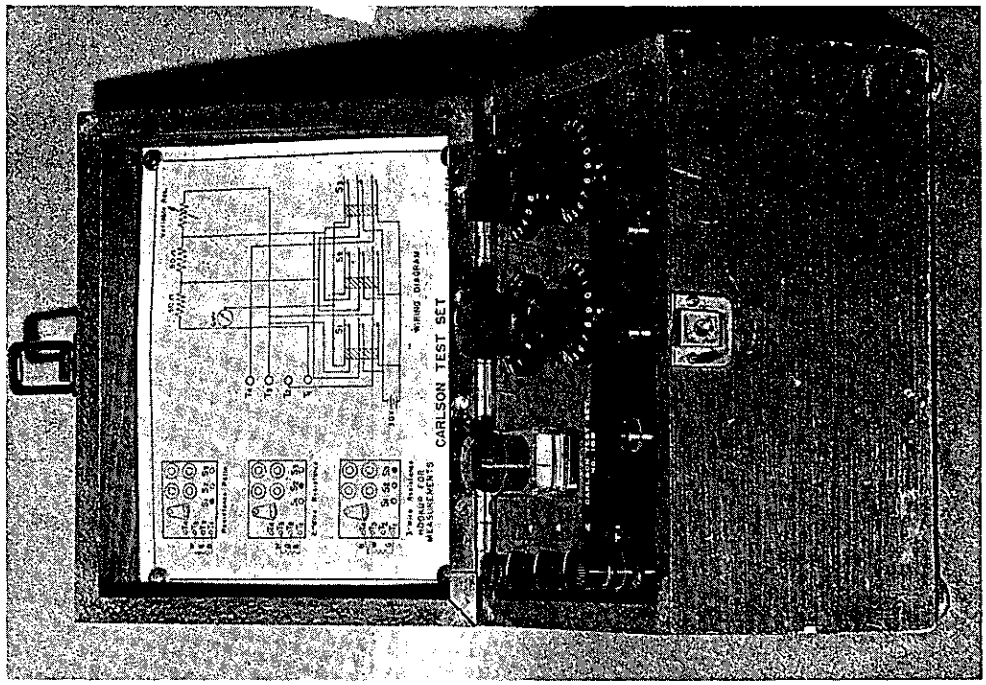

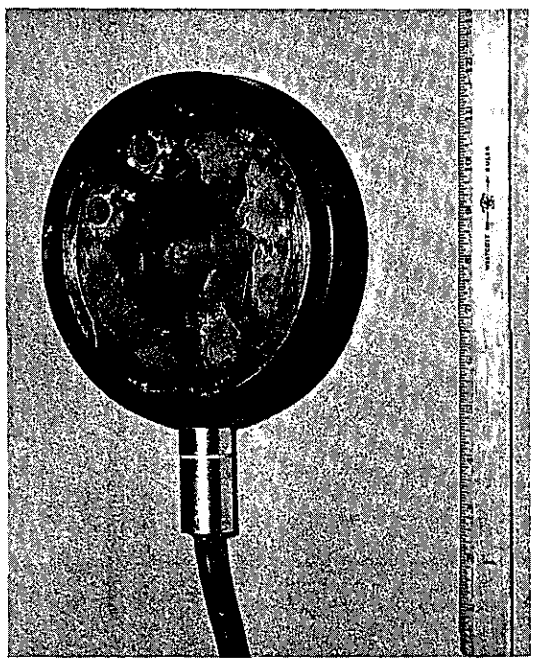

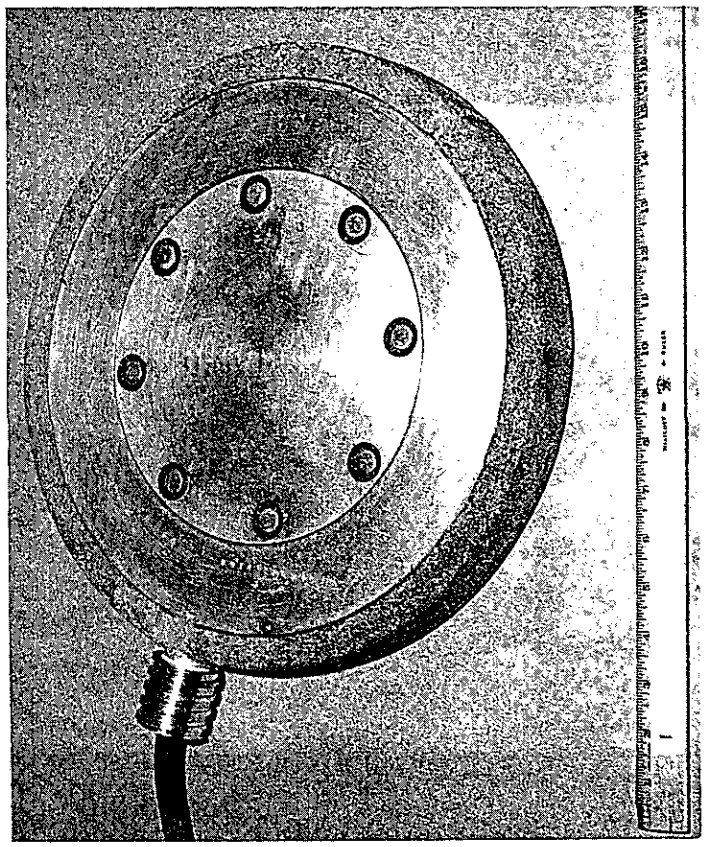

KYOWA Pressure Cells and CARLSON Readout

ClibPDF - www.fastio.com

Figure 19

Modified Carlson Pressure Cell and LVDT Readout

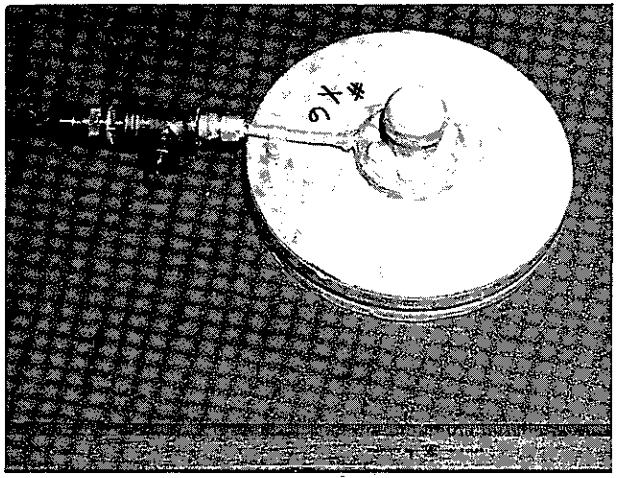

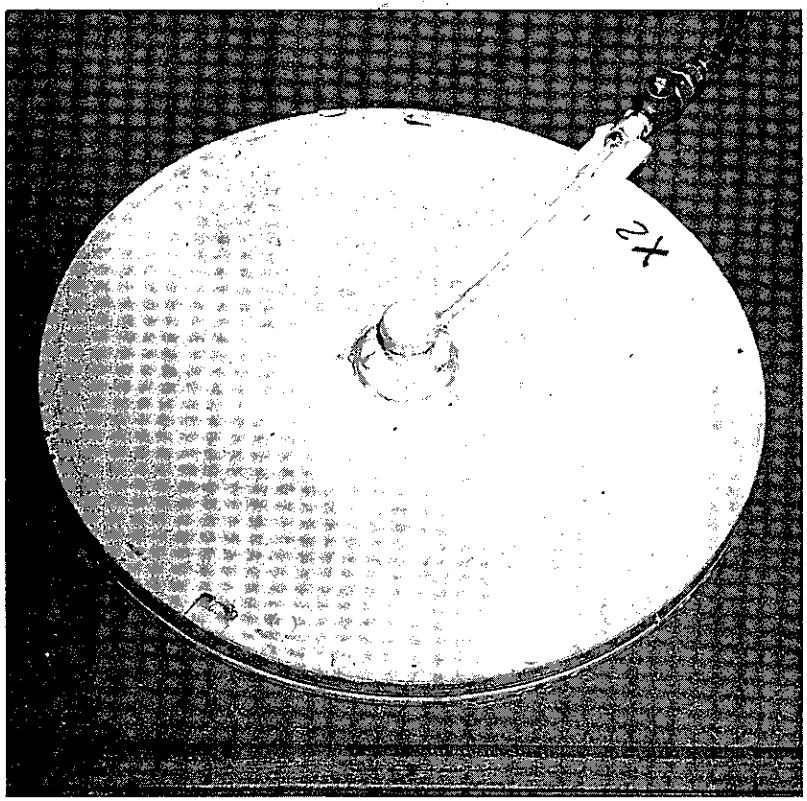

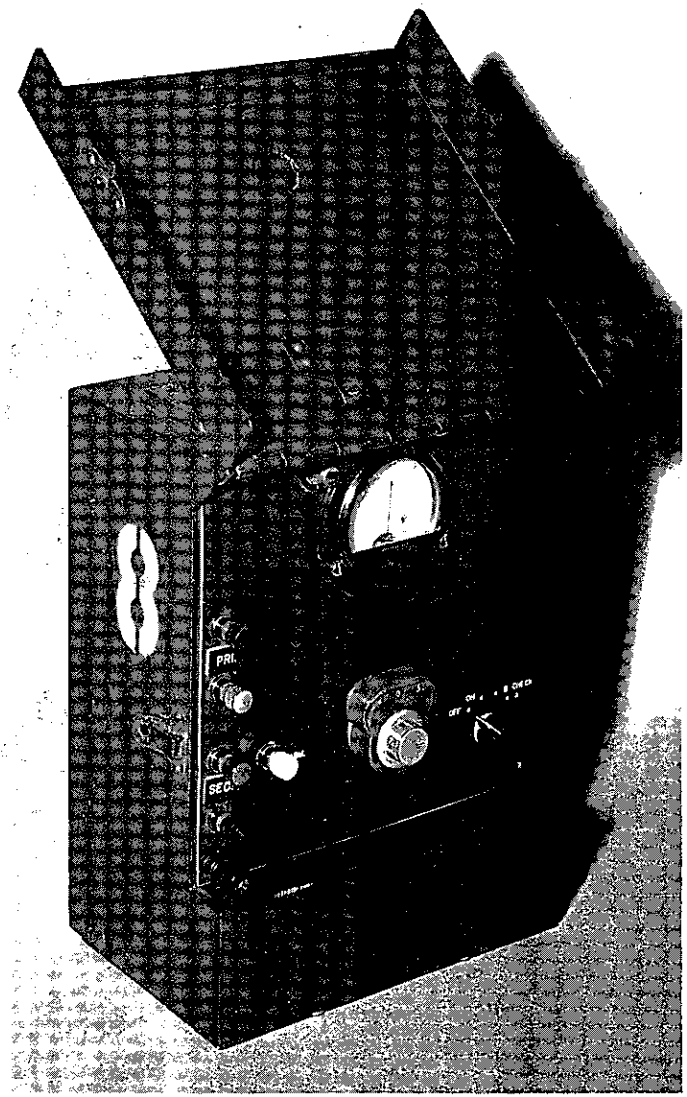

ClibPDF - www.fastio.com

Figure 20

Control Service Co. Cell

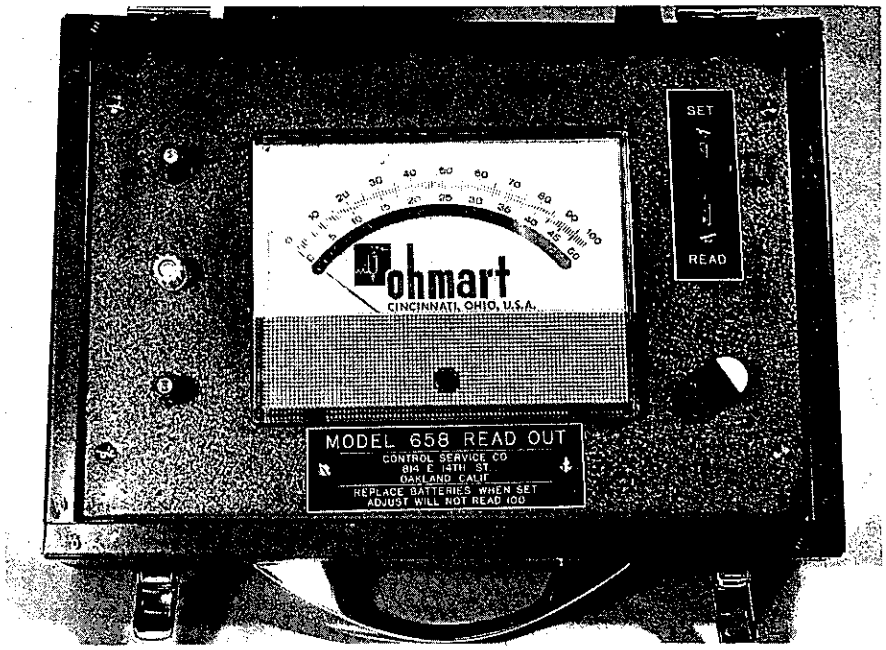

Readout Device

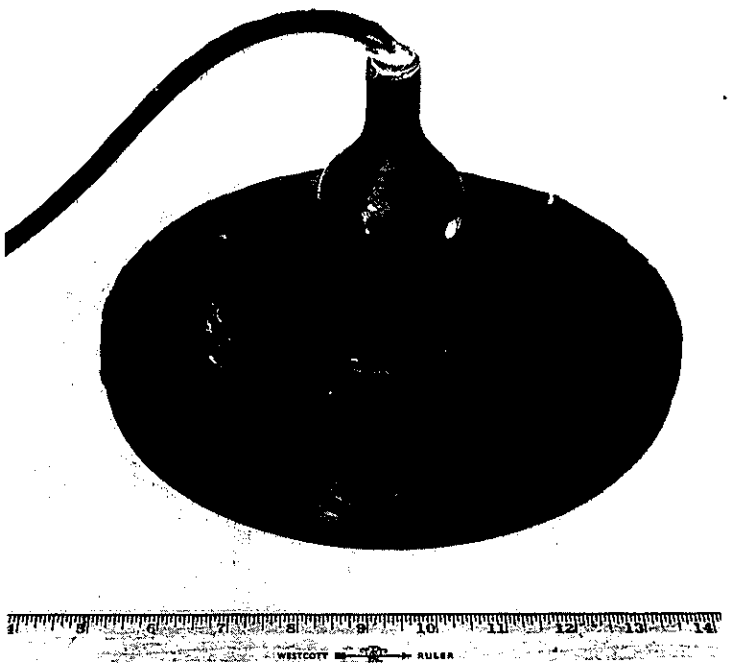

Pressure Cell

ClibPDF - www.fastio.com

Figure 21

Steps taken in preparing test sites

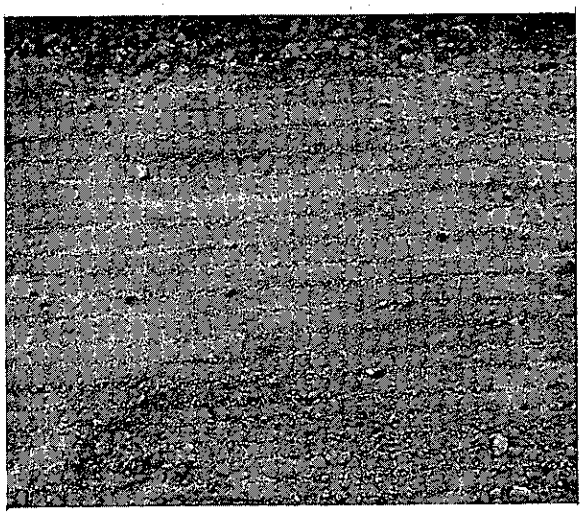

1. Smoothed surface

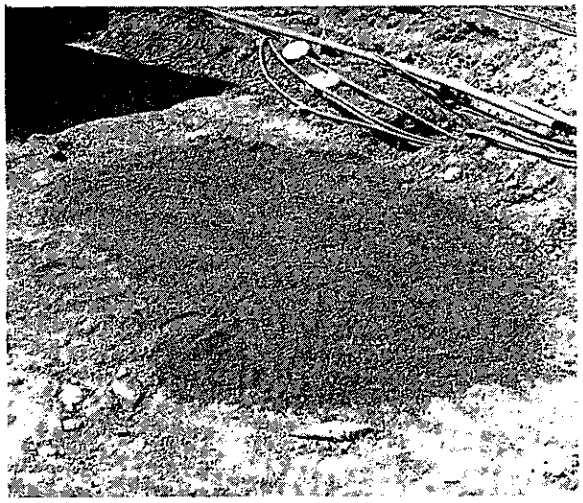

2. Sand blanket

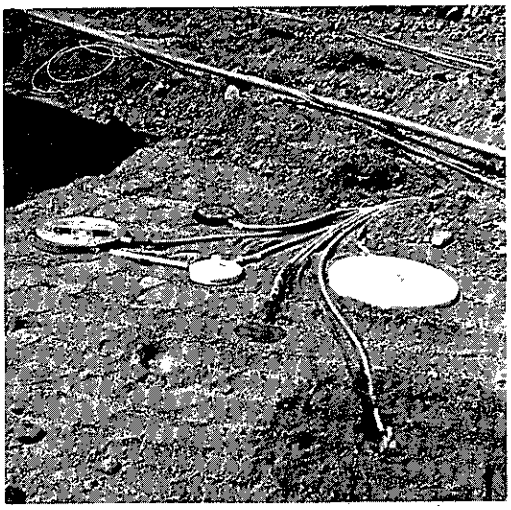

3. Cell placement

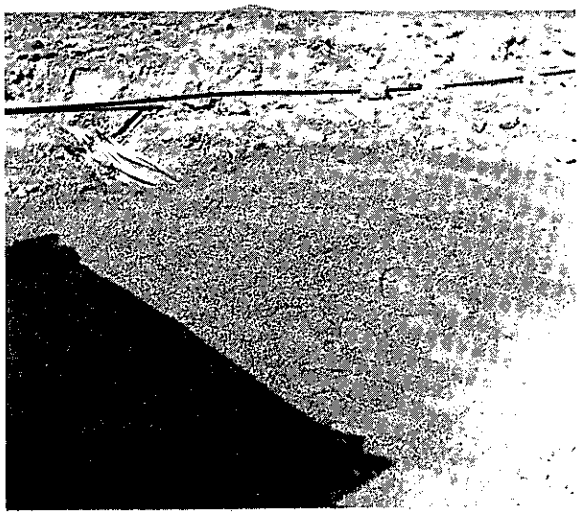

4. First sand cover

ClibPDF - www.fastio.com

Figure 21

Preparing sites (contd)

5. Wetted sand cover

6. Mechanically compacting

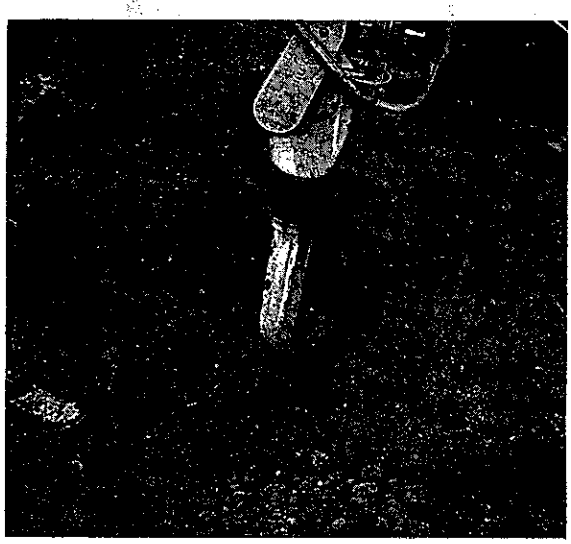

7. Mechanically compacting

8. Covering prior to allowing equipment to cross site

ClibPDF - www.fastio.com

ClibPDF - www.fastio.com

ClibPDF - www.fastio.com