NOT FOR PUBLICATION

TRANSPORTATION LABORATORY
RESEARCH REPORT

DYNAMIC TESTS OF METAL BEAM GUARDRAIL

CA-DOT-TL-6392-5-75-04

75-04

Presented at the 54th Annual Meeting
of the Transportation Research Board
January 1975

Prepared in Cooperation with the U.S. Department of Transportation,
Federal Highway Administration

Caltrans
CALIFORNIA DEPARTMENT OF TRANSPORTATION

ClibPDF - www.fastio.com

ClibPDF - www.fastio.com

TECHNICAL REPORT STANDARD TITLE PAGE

1. REPORT NO	2. GOVERNMENT ACCESSION NO	3. RECIPIENT'S CATALOG NO

4. TITLE AND SUBTITLE	5. REPORT DATE
Dynamic Tests of Metal Beam Guardrail	January 1975
	6. PERFORMING ORGANIZATION CODE
7. AUTHOR(S) R. L. Stoughton, J. R. Stoker, E. F. Nordlin	8. PERFORMING ORGANIZATION REPORT NO CA-DOT-TL-6392-5-75-04
9. PERFORMING ORGANIZATION NAME AND ADDRESS Transportation Laboratory 5900 Folsom Boulevard Sacramento, California 95819	10. WORK UNIT NO
	11. CONTRACT OR GRANT NO
12. SPONSORING AGENCY NAME AND ADDRESS California Department of Transportation Division of Construction and Research Sacramento, California 95807	13. TYPE OF REPORT & PERIOD COVERED
	14. SPONSORING AGENCY CODE

15. SUPPLEMENTARY NOTES
This study was conducted in cooperation with the U. S. Department of Transportation, Federal Highway Administration.

16. ABSTRACT

See Pages 1 and 2.

17. KEY WORDS	18. DISTRIBUTION STATEMENT
Deceleration, dynamic tests, guardrail design, guardrails, impact tests, posts, vehicle dynamics	Unlimited

19. SECURITY CLASSIF. (OF THIS REPORT)	20. SECURITY CLASSIF. (OF THIS PAGE)	21. NO. OF PAGES	22. PRICE
Unclassified	Unclassified	38	

(MRT 1242 ORIG 9 72)

ClibPDF - www.fastio.com

ClibPDF - www.fastio.com

State of California
Department of Transportation
Division of Construction and Research
Transportation Laboratory

DYNAMIC TESTS

OF

METAL BEAM GUARDRAIL

By

E. F. Nordlin
Supervising Materials and Research Engineer

J. R. Stoker
Senior Materials and Research Engineer

R. L. Stoughton
Associate Materials and Research Engineer

Prepared For Presentation at the Annual Meeting
of the Transportation Research Board,
Washington, D. C.

January, 1975

ClibPDF - www.fastio.com

ClibPDF - www.fastio.com

ABSTRACT

"Dynamic Tests of Metal Beam Guardrail - Series XXVII"

The results of four vehicle impact tests into metal beam guardrail using three types of posts and blocks are reported. The then current (1971) California Standard Plans for metal beam guardrail required 8" x 8" (203 x 203 mm) (nominal) D.F. posts and blocks. It was desired to determine whether (1) smaller sized wood posts and blocks could be used and (2) whether steel posts and blocks could be used in place of 8 x 8's in order to reduce guardrail costs and to obtain another permissible post material besides wood. It was concluded that 6" x 8" (152 x 203 mm) (nominal) D.F. wood posts and blocks were an acceptable substitute. Also W 6 x 8.5 (152 mm x 12.65 kgf/m) steel posts and blocks could be used provided W-section backup plates were used at alternate posts where no beam splice occurred and a positive connection was used at the end anchor cable in place

ClibPDF - www.fastio.com

of cable clips. All four tests were conducted using 4960 lb. (2260 kgf) passenger vehicles with nominal impact speeds and angles of 65 mph (105 km/hr) and 25° respectively.

The California Standard Plans and Specifications have been revised to incorporate all the findings of this study.

ClibPDF - www.fastio.com

I. INTRODUCTION

In 1964 the California Division of Highways performed a series of full-scale impact tests on Metal Beam Guardrail. Those tests[1] resulted in the adoption of the former standard design which featured a 12 ga. (2.66 mm) W-section steel beam mounted on 8" x 8" (203 x 203 mm) D.F. wood posts and blockout blocks that were spaced 6'-3" (1.9 m) on center. Top of rail height was 27 inches (685 mm). Later tests between 1965 and 1968 on short sections of guardrail[2] established the need for a positive anchor at the ends of guardrail installations. These anchors are now also part of the current standard guardrail design. Operational experience has proven this barrier effective in California. Tests conducted in 1968 and 1969 by the Southwest Research Institute[3] corroborated our test results. Our standard design was designated G4W in NCHRP Report 118[4].

In 1971 consideration was given to changes in California's standard guardrail design which would decrease costs without impairing the effectiveness of the barrier. Other states were using 6" x 8" (152 x 203 mm) D.F. wood posts and W6 x 8.5 (152 mm x 12.65 kgf/m) (kgf = kilogram force; 1 kgf = 2.2 lbs.) steel

ClibPDF - www.fastio.com

posts. The Southwest Research Institute had conducted successful tests on the steel post design[3]. Previously steel posts were not economically competitive, but fluctuations in price and supply of wood posts in 1972 made acceptance of two post materials desirable.

This report describes the results of four full scale dynamic impact tests on guardrail test barriers which incorporated either 8" x 8" (203 x 203 mm) and 6" x 8" (152 x 203 mm) wood posts and blocks or W6 x 8.5 (152 mm x 12.65 kgf/m) steel posts and blocks.

Although tests by other agencies and operational experience by others seemed satisfactory, these additional comparative tests were deemed necessary for three main reasons: 1) Barriers with smaller wood posts and blocks or steel posts had never been tested under the more severe conditions considered representative of California freeways and thus typically used in California barrier tests: 4900± lb (2230 kgf) vehicle, 65 mph (105 km/hr) impact velocity, and 25° angle of impact. 2) The barriers with the three types of posts had never been compared under identical conditions. 3) In addition, good accelerometer data had not been obtained in previous California guardrail tests.

ClibPDF - www.fastio.com

Shortages of the W6 x 8.5 (152 mm x 12.65 kgf/m) steel post have developed since the tests were conducted. It is felt, however, that the tests still have value (1) for comparative purposes with other guardrail designs, (2) to verify the integrity of steel post barriers in place on highways and (3) to illustrate the value of positive anchorage connections, and backup plates between posts and beams.

ClibPDF - www.fastio.com

II. CONCLUSIONS

A. Metal beam guardrail using 6" x 8" (152 x 203 mm) D.F. wood posts and blocks, effectively redirected a 4960 lb (2260 kgf) vehicle impacting at a speed of 68 mph (109 km/hr) and an angle with the barrier of 24°.

B. Metal beam guardrail using W6 x 8.5 (152 mm x 12.65 kgf/m) steel posts and blocks, effectively redirected a 4960 lb (2260 kgf) vehicle impacting at a speed of 66 mph (106 km/hr) and an angle with the barrier of 25°. However, the following two modifications of the standard wood post design were necessary:

1. A 1'-0" (0.305 m) long 12 ga. (2.66 mm) W-section "backup" plate was placed between the beam and block at alternate posts where beam splices did not occur.

2. The cable clips at the standard end anchor connection were replaced with a swaged fitting and clevis resulting in a positive cable connection.

ClibPDF - www.fastio.com

C. The barriers using either the 6" x 8" (152 x 203 mm) wood posts and blocks or the W6 x 8.5 (152 mm x 12.65 kgf/m) steel posts and blocks (as modified in Test 276) were as effective as the 1971 standard design using 8" x 8" (203 x 203 mm) D. F. wood posts and blocks which was also tested using a 4960 lb (2260 kgf) vehicle impacting at 66 mph (106 km/hr) and an angle with the barrier of 26°.

D. The California Standard Plans and Specifications have been revised to incorporate all the findings of this study.

ClibPDF - www.fastio.com

III. TECHNICAL DISCUSSION

A. Test Conditions

1. Barrier Design and Construction

Figure 1 shows the barrier design details.

Each 75 ft (22.9 m) long test barrier was built approximately one and a half feet (0.457 m) in front of the previous barrier tested with posts staggered midway between the post location of the previous barrier. This procedure ensured that 1) soil conditions would be nearly identical for all test barriers, 2) posts for each barrier would be placed in undisturbed soil, 3) post resistance in the soil would not be affected by post holes from previous barriers which were staggered out of the way.

Wood posts were installed in accordance with common practice in California. The 8" x 8" (203 x 203 mm) posts were driven into nine inch (228 mm) diameter predrilled holes. One machine mounted on a truck could both drill holes and drive posts. The auger on the truck could be swiveled out of the way while the post was being driven. The operator's remote truck controls along with

ClibPDF - www.fastio.com

ClibPDF - www.fastio.com

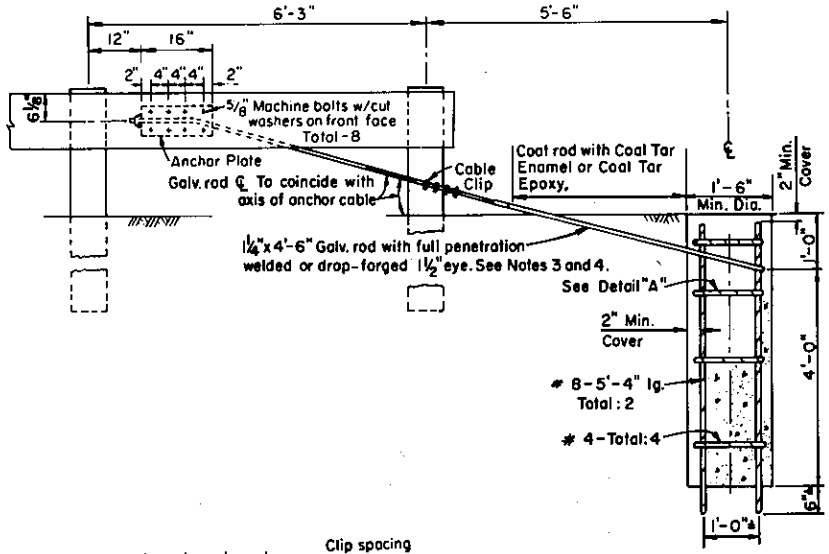

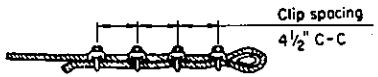

"U" Bolts of clip on short end of cable only.
"U" Bolts tightened to 50 Ft. lbs. torque.

CABLE CLIP INSTALLATION

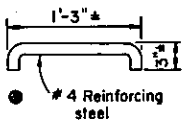

DETAIL "A"

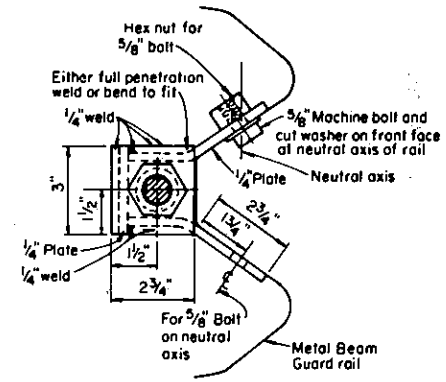

SECTION A-A

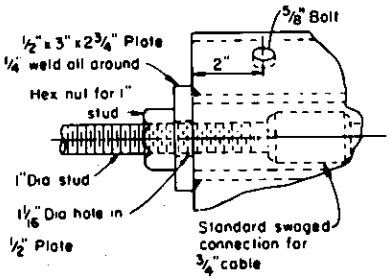

ANCHOR PLATE DETAILS

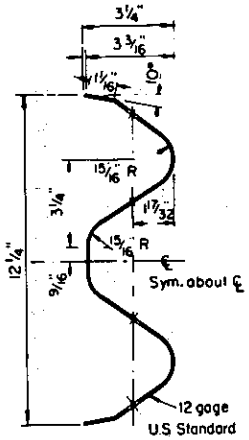

SECTION THRU RAIL ELEMENT

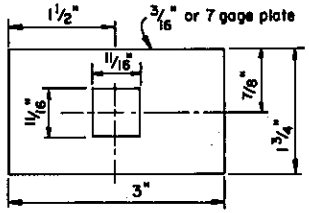

FLAT PLATE WASHER

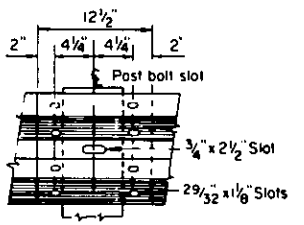

5/8" x 1 1/4" Button head oval shoulder bolts with 1 1/4" recessed hex nuts - Total 8 per splice and 4 per terminal section
Lap in direction of traffic.

RAIL SPLICE

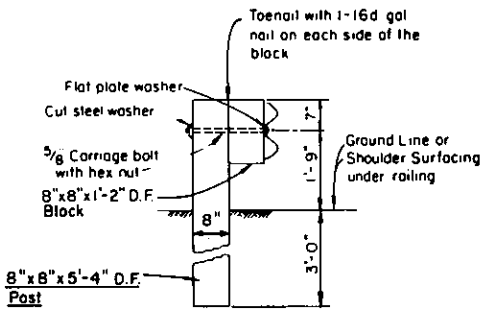

Post spacing 6'-3" C to C.

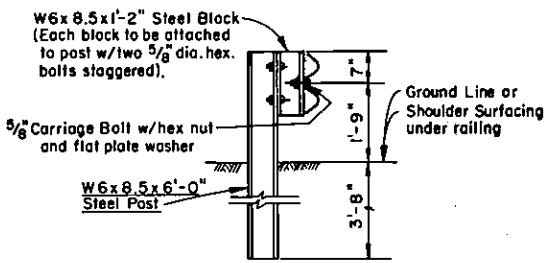

Post spacing 6'-3" C to C.

GUARDRAIL SYSTEM G4W
8X8 WOOD POST AND
GUARDRAIL SYSTEM G4S
W6 X 8.5 STEEL POST [4]

Figure 1 TEST BARRIER DETAILS

versatile equipment controls permitted him to obtain good post alignment, quickly and easily. In order to simulate the same soil condition, the 6" x 8" (152 x 203 mm) wood posts were driven into eight inch (203 mm) diameter pilot holes. Steel W6 x 8.5 (152 mm x 12.65 kgf/m) posts were driven into the ground rather than into predrilled holes in order to achieve maximum lateral bearing resistance.

Figure 2 shows the cable end anchor with a swaged fitting (replacing the cable clips) which was used in Test 276. Note the strain gages that were used on the anchor for Test 276.

Figure 2
Cable End Anchor Used
on Barrier for Test
276

ClibPDF - www.fastio.com

2. Test Equipment and Procedure

Retired California Highway Patrol sedans were used for all tests. The vehicle weight of 4960 lbs (2260 kgf) included the on-board instrumentation, a dummy, and a gas tank filled with water. Control of the vehicle during impact was accomplished by remote radio control from a command car following approximately 100 feet (30.5 m) behind the test vehicle in Tests 272, 273 and 274.

In Test 276 the vehicle was controlled by a cable guidance system attached to the left front wheel spindle of the test vehicle.

High and normal speed movie cameras and still cameras were used to record the impact event, the condition of the vehicle, and the barrier damage before and after impact.

To obtain data on the motions and deceleration forces a human would be subjected to during these impacts, an anthropometric dummy was placed in the driver's seat of the crash vehicle for all tests. The dummy, Sierra Stan (Model P/N 292-850), manufactured by Sierra Engineering Company, is a 50th percentile male weighing 165 lbs (75 kgf). It was restrained during the tests by a standard lap belt.

ClibPDF - www.fastio.com

Accelerometers, unbonded strain gage type, were mounted on the vehicle and in the dummy to obtain deceleration data for use in judging the severity of injuries to passengers.

Reference 9 contains a detailed description of: the test vehicle mechanical instrumentation; photographic equipment and data collection techniques; electronic instrumentation and data reduction methods; and accelerometer and impactograph records.

B. Test Results

1. Test 272

The first test, Test 272, was a control test on the standard California Metal Beam Guardrail using 8" x 8" (203 x 203 mm) wood posts and blocks (Figure 1). A 1970 Mercury sedan weighing 4960 lbs (2260 kgf) impacted the barrier between posts #5 and #6 at a speed of 66 mph (106 km/hr) and an angle of impact of 26°.

There was little rise or roll imparted to the vehicle during impact until it was nearly parallel to the barrier. Then the vehicle rolled away from the barrier about 15° and the right front end rose about 0.9 ft (0.274 m). The vehicle traveled

ClibPDF - www.fastio.com

smoothly through impact and had an exit angle of the vehicle center of gravity (c.g.) of about 6° and an exit heading angle of 0° so that it stayed close to the barrier and almost parallel to it. Figure 3 shows sequential photographs of the impact event.

The right front portion of the vehicle was so severely damaged that it could not be driven away. There was no intrusion of vehicle parts or barrier components into the passenger compartment.

Two guardrail posts, near the point of impact were destroyed and pieces of the posts and their blocks were splintered and broken and thrown behind the barrier. Two other posts and their blocks were split. The metal beam was partially flattened and raised near the area of impact. Maximum displacement of the posts at ground level was one foot (0.305 m).

Upon impact the dummy, restrained in the driver's position by a lap belt, was thrown sideways and downward toward the right passenger's seat. There were no apparent "abrasions" incurred by the dummy or damage to the interior of the vehicle caused by the dummy.

ClibPDF - www.fastio.com

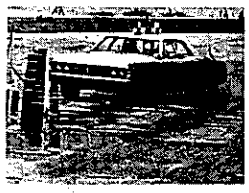

Test 272

Impact

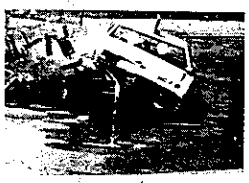

+ 0.370 Sec.

+ 0.538 Sec.

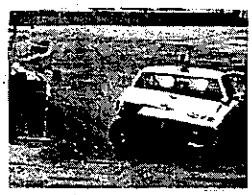

+ 1.075 Sec.

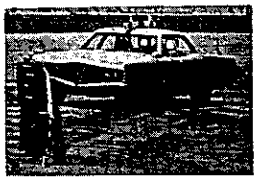

Test 273

Impact

+ 0.032 Sec.

+ 0.204 Sec.

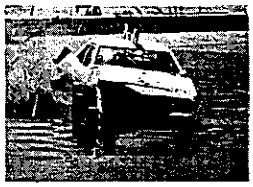

+0.418 Sec.

+ 0.776 Sec.

Test 274

Impact

+ 0.052 Sec.

+ 0.134 Sec.

+ 0.296 Sec.

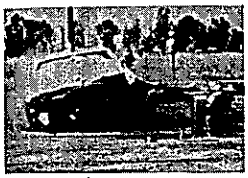

+ 0.550 Sec.

Test 276

Impact

+ 0.025 Sec.

+ 0.174 Sec.

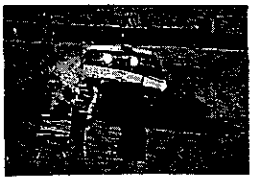

+ 0.273 Sec.

+ 0.673 Sec.

FIGURE 3 - SEQUENTIAL TEST VIEWS

ClibPDF - www.fastio.com

2. Test 273

Test 273 was on a barrier identical to the standard California Metal Beam Guardrail except that 6" x 8" (152 x 203 mm) wood posts and blocks were used in place of 8" x 8" (203 x 203 mm) wood posts and blocks. A 1970 Mercury sedan weighing 4960 lbs (2260 kgf) impacted the barrier slightly downstream of post #4 at a speed of 68 mph (109 km/hr) and an angle of impact of 24°.

Vehicle behavior was very similar to that in Test 272. There was little rise or roll imparted to the vehicle during impact until it was nearly parallel to the barrier. Then the vehicle rolled away from the barrier about 15° and the right front end rose about 0.8 ft (0.244 m). The vehicle traveled smoothly through impact. The exit angle of the vehicle c.g. was 14° which was the same as the exit heading angle of the vehicle. This angle gradually increased as the vehicle moved away from the barrier. Figure 3 shows sequential photographs of the impact event.

Damage to the right front area of the vehicle was severe. The car could not be driven away. There was no intrusion of vehicle parts or barrier components into the passenger compartment.

ClibPDF - www.fastio.com

Two guardrail posts near the point of impact were destroyed. A third adjacent post was splintered and one post near each end of the barrier was split. Three blocks were broken and thrown behind the barrier along with some of the splintered post debris. The beam was partially flattened and raised near the area of impact. Maximum displacement of the posts at ground level was 1.65 ft (0.503 m) perpendicular to the barrier at post #5.

Dummy behavior was the same as for Test 272.

3. Test 274

Steel W6 x 8.5 (152 mm x 12.65 kgf/m) posts and blocks were used in place of 8" x 8" (203 x 203 mm) wood posts and blocks in the barrier for Test 274 (Figure 1). A 1970 Mercury sedan weighing 4960 lbs (2260 kgf) impacted the barrier between posts #4 and #5 at a speed of 63 mph (101 km/hr) and an angle of impact of 24°.

The vehicle penetrated the barrier with little change in direction and spun around 180° as it slid to a stop. There was no rise and very little roll imparted to the vehicle during impact. Figure 3 shows sequential photographs of the impact event.

ClibPDF - www.fastio.com

Vehicle forestructure damage was severe. The car could not be driven away. There was no intrusion of vehicle parts or barrier components into the passenger compartment.

Shearing of the W-section beam occurred at the downstream edge of post #6 (posts numbered from upstream end). The beam was detached from post #6 and bent back around post #5. Downstream the beam segment was bent where post #7 had been attached, and at the upstream edge of post #8. All 13 posts were twisted and displaced; the top of post #1 was displaced 18 inches (0.457 m) downstream, and the top of post #13 was displaced 15 inches (0.381 m) downstream. Posts #5, #6 and #7 were twisted and bent down near the ground about their minor axes with virtually no displacement of the posts in the ground. Slippage of the cable through five cable clips occurred at the upstream anchorage. These clips had been torqued to 50 ft-lbs (6.92 m-kgf) twice, including once on the day before the test. The bolt between the beam and block pulled through the beam at posts #5, #6, #7 and #8. The block at post #6 was buckled flat, and local buckling of block flanges occurred at several posts near impact.

4. Test 276

The barrier for Test 276 also incorporated steel W6 x 8.5 (152 mm x 12.65 kgf/m) posts and blocks and was the same as that

ClibPDF - www.fastio.com

for Test 274 with two exceptions: 1) 1'-0" (0.305 m) long steel W-section backup plates were placed behind the continuous guardrail beam at alternate steel posts where there were no beam splices and 2) the cable clips at the cable end anchors were replaced by a swaged fitting and clevis that connected to the standard eyerod which is embedded in the concrete footing at the ends of the barrier.

A 1970 Mercury sedan weighing 4960 lbs (2260 kgf) impacted the barrier between posts #4 and #5 at a speed of 66 mph (106 km/hr) and an angle of impact of 25°.

Vehicle behavior was very stable during impact; there was virtually no vehicular roll or rise as redirection occurred. The exit angle of the vehicle c.g. was about 16° and was the same as the exit heading angle of the vehicle. This angle decreased as the car skidded clockwise to a stop, coming back towards the barrier. Figure 3 shows sequential photographs of the impact event.

Vehicle damage was similar to that in Tests 272 and 273.

Barrier damage consisted mainly of moderate twisting and bending of posts #5, #6, and #7 although none of the posts were bent to the ground. Separation of the metal beam guardrail from the

ClibPDF - www.fastio.com

steel post block occurred only at post #6. Severe buckling of the blocks occurred at posts #5, #6, and #7. A maximum of 3/8" (9.5 mm) slippage of a beam splice occurred at post #5. Barrier damage is shown in Figure 4.

During impact the dummy was thrown to the right and downward into the right passenger's seat, apparently without striking the dashboard. The dummy immediately bounced back into an upright position, struck the back of its head on the left door post, and came to rest against the left door.

C. Discussion of Test Results

1. General

In this section the test results will be weighed against the service requirements and performance criteria for longitudinal barriers as stated in Reference 4. "The order of emphasis for service requirements is first to safety, second to economics, and third to aesthetics[4]." With respect to performance criteria, "If the barrier system contains the moving vehicle (i.e. structural strength), the vehicle decelerations are judged to be within human tolerance levels, and the vehicle post impact trajectory is

ClibPDF - www.fastio.com

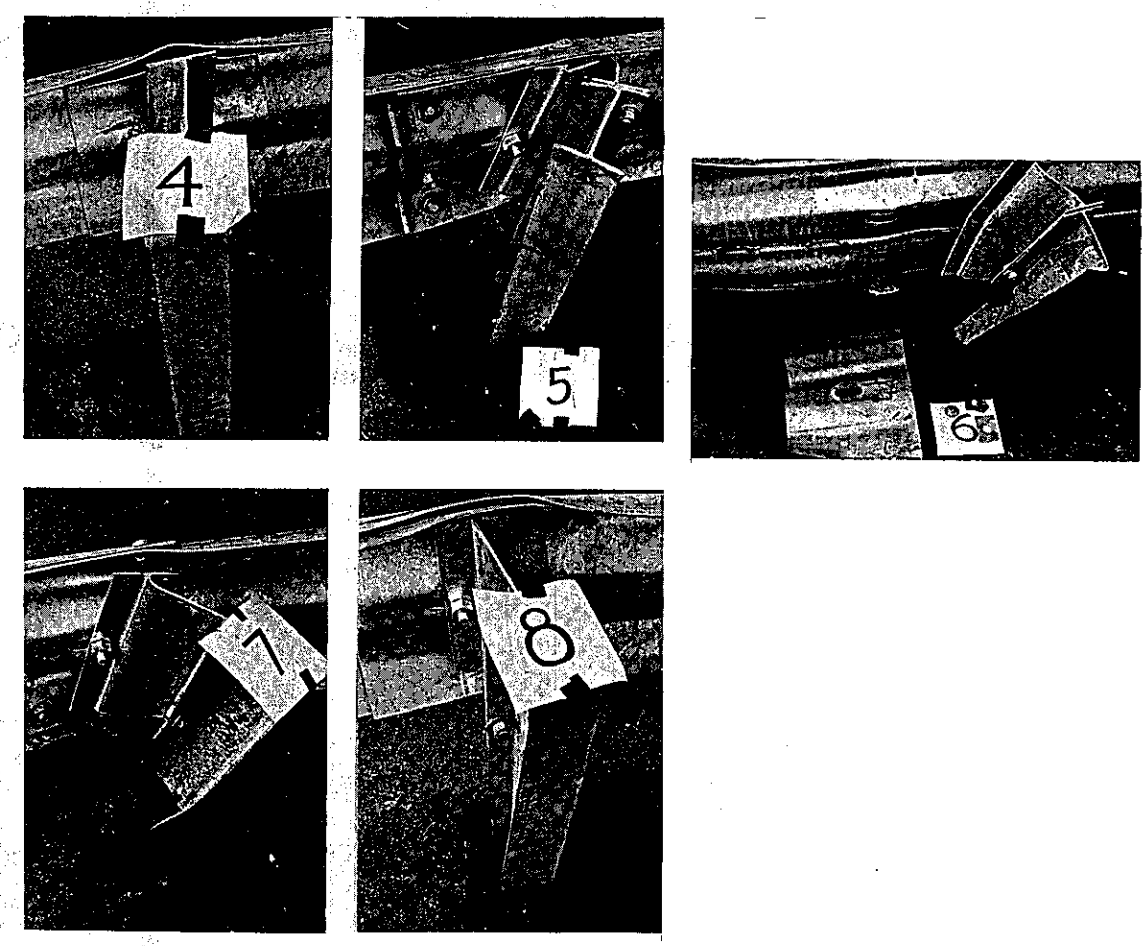

Figure 4 Barrier Damage, Test 276

acceptable, the candidate barrier is considered acceptably safe for in-service experimental use. After the system has been carefully monitored and evaluated in service and its effectiveness has been established, the system is judged to be operational[4]."

ClibPDF - www.fastio.com

2. Dynamic Performance Criteria - Safety

a. Structural Integrity of Barrier

The barriers impacted in Tests 272, 273 and 276 all met the requirements of containment. There were no indications that the barriers were on the brink of failure. The barrier impacted in Test 274 was penetrated which was unacceptable. An analysis of that failure is described in a later section. Figure 4 shows closeup views of posts near the impact area for Test 276. The backup plates at posts #4 and #8 clearly resisted excessive bending of the W-section beams at the posts.

Samples of soil from the barrier test site were tested. The soil report indicated the soil was quite strong. It consisted of a layer of stiff, overconsolidated clay in the top 1.5 feet (0.457 m) of soil and a layer of sandy clay with gravel and clayey sand with gravel (commonly called "hardpan") from 1.5 to 4.5 feet (0.457 - 1.37 m) of depth. This stiff soil probably gave the barrier added apparent stiffness and forced the wood posts near impact to shear and the steel posts to bend rather than yielding in the soil. However, the major restraining force in the barrier appears to come from the W-section beam as evidenced by Test 274 where the cable anchor slipped and the W-section tensile strength could not be developed.

ClibPDF - www.fastio.com

b. Vehicle Deceleration.

Guideline values for maximum vehicle decelerations (at center of mass) are presented in Table 1[6]. The limits of deceleration given here are not nominal limits for "no injury", but rather are maximum limits beyond which disabling injury or fatality may be expected.

Reference 7 explains in detail some reasons for using the 50 msec time interval.

ClibPDF - www.fastio.com

Barrier Performance Rating**	Maximum Vehicle Declerations (G's)*			
	Lateral	Longitudinal	Total	Remarks
A	3	5	6	Preferred Range
B	5	10	12	
C	15	25	25	

*Vehicle rigid body decelerations; maximum 500 G/sec onset rate; highest 50 millisecond average.

**A - limits for unrestrained passenger.
B - limits for passenger restrained by lap belt.
C - limits for passenger restrained by lap and shoulder belts.

Table 1 - Maximum Vehicle Decelerations

ClibPDF - www.fastio.com

Table 2 indicates, in accordance with the values shown in Table 1, that for all tests, values of vehicle deceleration in the longitudinal direction were well below the 10G recommended limit for lap belted passengers and slightly over the 5G recommended limit for unrestrained passengers.

The values of vehicle deceleration in the lateral direction, which are more critical for impacts into guardrail, slightly exceeded the recommended limit of 5G's for lap belted passengers but were well below the 15G limit for passengers wearing shoulder and lap belts.

Although the deceleration values shown are calculated from accelerometer data to one hundredth of a G, they should not be considered to have that accuracy. The values are in a range similar to that calculated for other tests of metal beam guardrail. Table 2 gives the results of other test series involving similar vehicle weights, impact speeds and angles of impact[4].

The number of tests for which 50 millisecond values of deceleration have been reported in the literature are rather limited. Southwest Research Institute recently reported results of tests on guardrail and median barrier terminals. Eight side angle tests into these barriers have yielded 50 millisecond values of longitudinal deceleration ranging from 4.6 to 8.5 G's and values of lateral

ClibPDF - www.fastio.com

Table 2 Test Parameters and Results

TEST NO. (SYSTEM)	VEHICLE WEIGHT LBS.	VEHICLE SPEED MPH	KINETIC ENERGY FT.-KIPS	IMPACT ANGLE DEGREES	VEHICLE[1] DECELERATION G's		GADD SEVERITY INDEX	MAXIMUM PERMANENT GUARDRAIL DEFLECTION[2] FT.	EXIT ANGLE[3] DEGREES
					LATERAL	LONG.			
THIS TEST SERIES									
272 (G4W)	4960	66	725	26	5.45	5.55	883	2.22	6
273 (G4W)[4]	4960	68	770	24	6.95	6.75	1130	2.33	14
274 (G4S)	4960	63	661	24	4.75	5.80	279	FAILURE	—
276 (G4S)[5]	4960	66	725	25	6.85	3.78	371	1.76	16
CALIFORNIA DIVISION OF HIGHWAYS – PREVIOUS TESTS (1,2)									
107 (G4W)	4570	60	552	25	—	—	—	1.5	17
108 (G4W)[6]	4570	59	534	25	—	—	—	1.5	19
133 (G4W)	4540	56	477	30	—	—	—	2.8	7
135 (G4W)	4540	59	534	28	—	—	—	1.6	24
TESTS BY SOUTHWEST RESEARCH INSTITUTE (3,4)									
101 (G4W)	4042	55.3	414	30.5	4.6	4.6	—	2.60	11.7
103 (G4W)	4123	60.1	500	22.2	6.1	3.0	—	2.40	15.0
119 (G4S)[7]	4169	53.4	400	30.2	4.4[9]	4.6[9]	—	2.67	19.8
120 (G4S)	3813	56.8	413	28.4	6.6	3.9	—	2.90	8.0
121 (G4S)[8]	4478	56.2	475	27.4	6.8[9]	3.7[9]	—	2.10	9.3
122 (G4S)[8]	4570	62.9	607	25.3	7.8[9]	3.9[9]	—	2.90	9.0

1. Maximum deceleration averaged over a period of 50 milliseconds. Values for guardrail tests (4) computed from high speed movie film; other values computed from accelerometer data.

2. Measured at top edge of rail

3. Direction vehicle c.g. was moving immediately following final vehicle contact with barrier

4. 6x8 posts & blocks

5. Modified w/backplates and clevis in anchorage

6. 24" beam height

7. No blockout

8. Double blockout

9. Peak decelerations

Metric Conversion Factors: 1 lb=0.454 kgf; 1mph=1.61 km/hr; 1 ft-kip=138.4 m-kgf; 1 ft=0.305m
G4w & G4s defined in Reference 4.

ClibPDF - www.fastio.com

deceleration ranging from 2.5 to 7.6 G's given test parameters similar to those in Table 2.

It is apparent that although the barriers in Tests 272, 273 and 276 may not have yielded ideal values of vehicle deceleration, the values for those tests indicate that the barriers performed equally as well as currently accepted barrier systems.

Values of the Gadd Severity Index (similar to the Head Injury Criterion now more commonly used) were computed and also shown in Table 2. In Test 273 only, the index slightly exceeded the threshold value of 1000 above which serious injury or death might be expected due to concussion. This value is not reliable as a sole indicator of the chance of passenger injuries due to the large number of variables related to the dummy and the vehicle interior.

Notwithstanding these limitations, it can be surmised that in the severe proof tests of the barriers, vehicle passengers had a fair chance of survival. Hence, in the large majority of actual highway accidents involving these guardrail systems, it can be predicted that passengers would sustain something less than serious injuries.

The degree of injury would, of course, depend greatly on the type of passenger restraints.

c. Vehicle Post Impact Trajectory

ClibPDF - www.fastio.com

(1) General

The following sections describe some elements of the impact event which have an influence on vehicle post impact trajectory, and which are commonly used to evaluate barrier crash tests.

(2) Barrier Deflection

The deflection of the rail in Test 276 is less than that for Tests 272 and 273 and may account for the relatively low longitudinal vehicle deceleration. Table 2 compares the barrier rail deflections of these tests with other test series. This table clearly shows that the permanent barrier rail deflections were in the same range as those recorded for previous test series. It should be noted that the vehicle kinetic energy at impact for Tests 272, 273 and 276 was appreciably higher than that for other tests in the table. Barrier damage in Tests 272 and 273 was very similar which indicates that the anchored metal beam was the critical restraining element, rather than the wood posts.

ClibPDF - www.fastio.com

(3) Vehicle Crush

Comparing Tests 272, 273 and 276 the damage to the right front portion of the vehicle was quite severe, roughly similar for all tests, and typical of "successful" guard-rail crash tests. The right front wheel was disabled in all three tests.

(4) Vehicle Rise and Roll

Analysis of the high speed movie film produced the values of rise and roll as shown in Table 3.

TABLE 3

Vehicle Rise and Roll

Test No.	Rise* Ft (m)	Roll** Front of Vehicle Degrees	Roll** Rear of Vehicle Degrees
272	0.9 (0.274)	15°	12°
273	0.8 (0.244)	17°	---
276	- - - - -	0°	-1°

* Rise measured at target on right front fender

** Roll measured at top of front and rear windshields in degrees away from a horizontal plane.

ClibPDF - www.fastio.com

These values and the movies demonstrate the stable condition of the test vehicles as they progressed through impact. The most stable condition occurred with the steel post guardrail.

(5) Final Vehicle Position

Figure 5 shows the test vehicle paths after impacting the test barriers. There is no easy answer to explain the variance in post impact trajectories. Various factors may have an effect including barrier deflection, vehicle crush and damage to the wheel, time when brakes are actuated by remote control, amount of rise and roll, paving surface conditions, etc.

(6) Barrier Debris

The steel post guardrail appears to have an advantage over wood post guardrail in that no barrier parts were dislodged in Test 276. In tests 272 and 273 pieces of wood posts and blocks were thrown behind the barrier. Therefore, when guardrail is placed in narrow median or gore areas it might be preferable to use the steel post type from the debris standpoint.

ClibPDF - www.fastio.com

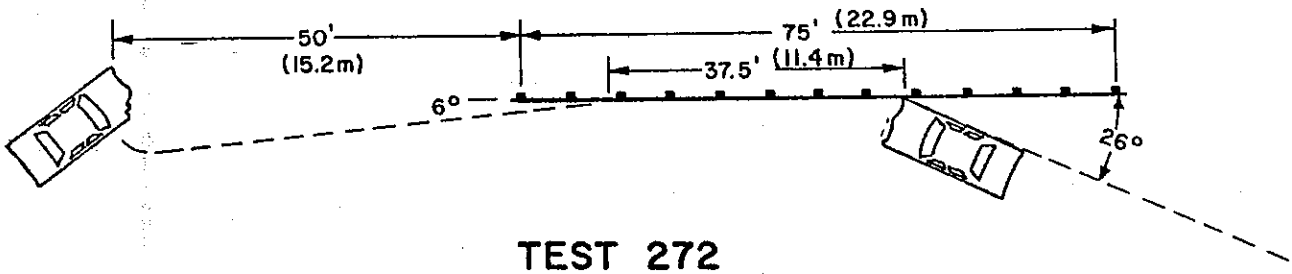

TEST 272

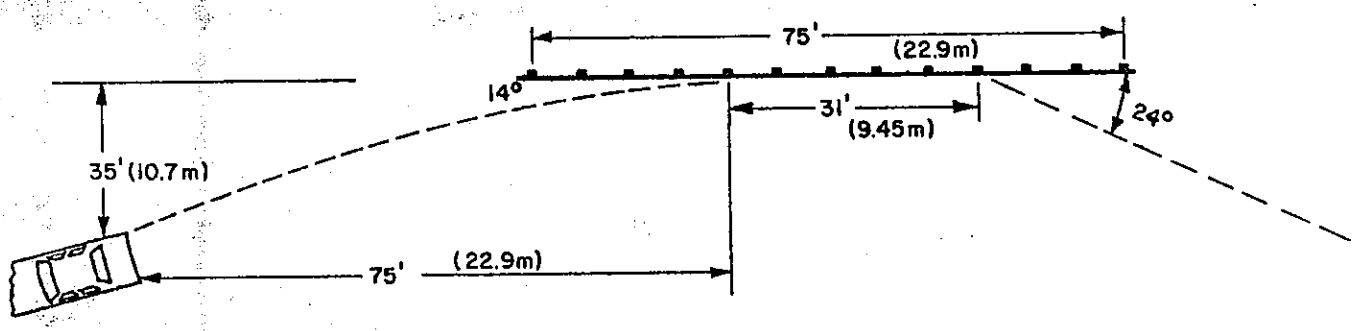

TEST 273

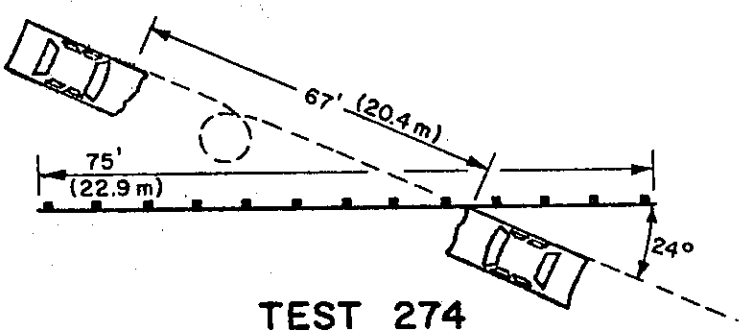

TEST 274

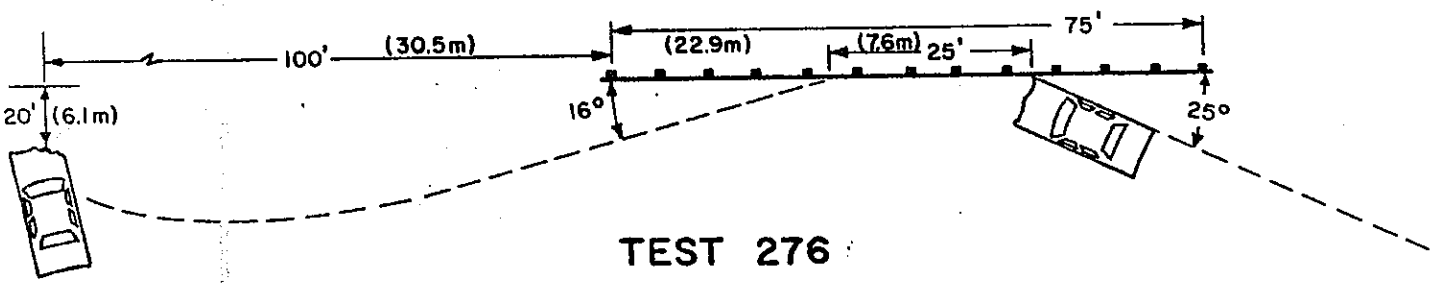

TEST 276

Figure 5 VEHICLE TRAJECTORIES

ClibPDF - www.fastio.com

3. Cost

In the past only wood posts were approved for use in guardrail. The use of steel posts had not been seriously considered because they were not cost competitive, and the wood post type guardrail had proven fully effective in full scale tests and in operation. About the time this latest test series was conducted, the cost of wood posts and blocks was rising rapidly and there was an apparent shortage. These rapid changes in supply and cost have made it highly desirable to also approve as a standard the use of steel posts in guardrail. Fortunately the steel post guardrail was shown in Test 276 to be equally as effective as the wood post guardrail.

It does not appear that there would be any difference in maintenance and repair labor costs for the barrier types tested in Test 272, 273 and 276. Cost and availability of replacement components are not predictable based on current shortages of highway construction materials which may continue into the future.

4. Aesthetics

Guardrails with 6" x 8" (152 x 203 mm) wood posts and blocks and W6 x 8.5 (152 mm x 12.65 kgf/m) steel posts and blocks do not appear to offer any substantial improvement or down grading of the

ClibPDF - www.fastio.com

appearance of guardrail using 8" x 8" (203 x 203 mm) wood posts and blocks. The steel post guardrail is slightly more streamlined and has uniformity of materials (all steel); the wood post guardrail may have a blockier, more substantial appearance, and perhaps a more rustic appearance which may be desirable in rural areas or other selected locations. However, bare steel posts made of any of the weathering steels could also be used to provide a rustic appearance.

5. Analysis of Test 274

The barrier used in this test incorporated W6 x 8.5 (152 mm x 12.65 kgf/m) steel posts and blocks. Penetration of the rail resulted when the vehicle impacted the barrier. This section summarizes the analysis of that failure which led to the successfully revised barrier design used in Test 276.

a. The steel posts have about 90 times less torsional rigidity than wood posts, hence they absorbed very little of the tensile load developed in the rail. Instead, they twisted and transmitted a large load almost instantly to the cable end anchors.

ClibPDF - www.fastio.com

b. Due to this large dynamic load ("jerk") the cable slipped through the five cable clips at the upstream anchor.

c. Slipping of the cable relaxed the tension in the steel W-section beam permitting severe pocketing, coldworking, and weakening of the metal beam.

To correct this condition, two changes were made to the barrier design for Test 276; (1) a swaged fitting and clevis were used to replace the five cable clips on the cable end anchorage to provide a positive anchorage and (2) twelve inch long backup sections of W-section beam were placed behind the beam at alternate posts where beam splices did not occur. These backup sections reduced the tendency of the rail to hinge or tear along the hard sharp edge of the steel blocks and posts. The results of Test 276 proved the effectiveness of these modifications.

Figure 6 shows the loads on the anchorage cables during impact. They indicate more rapid load initiation times for Tests 274 and 276 where steel posts were used. They also show the cables are not overdesigned.

ClibPDF - www.fastio.com

Figure 6 UPSTREAM ANCHORAGE
LOAD VS TIME

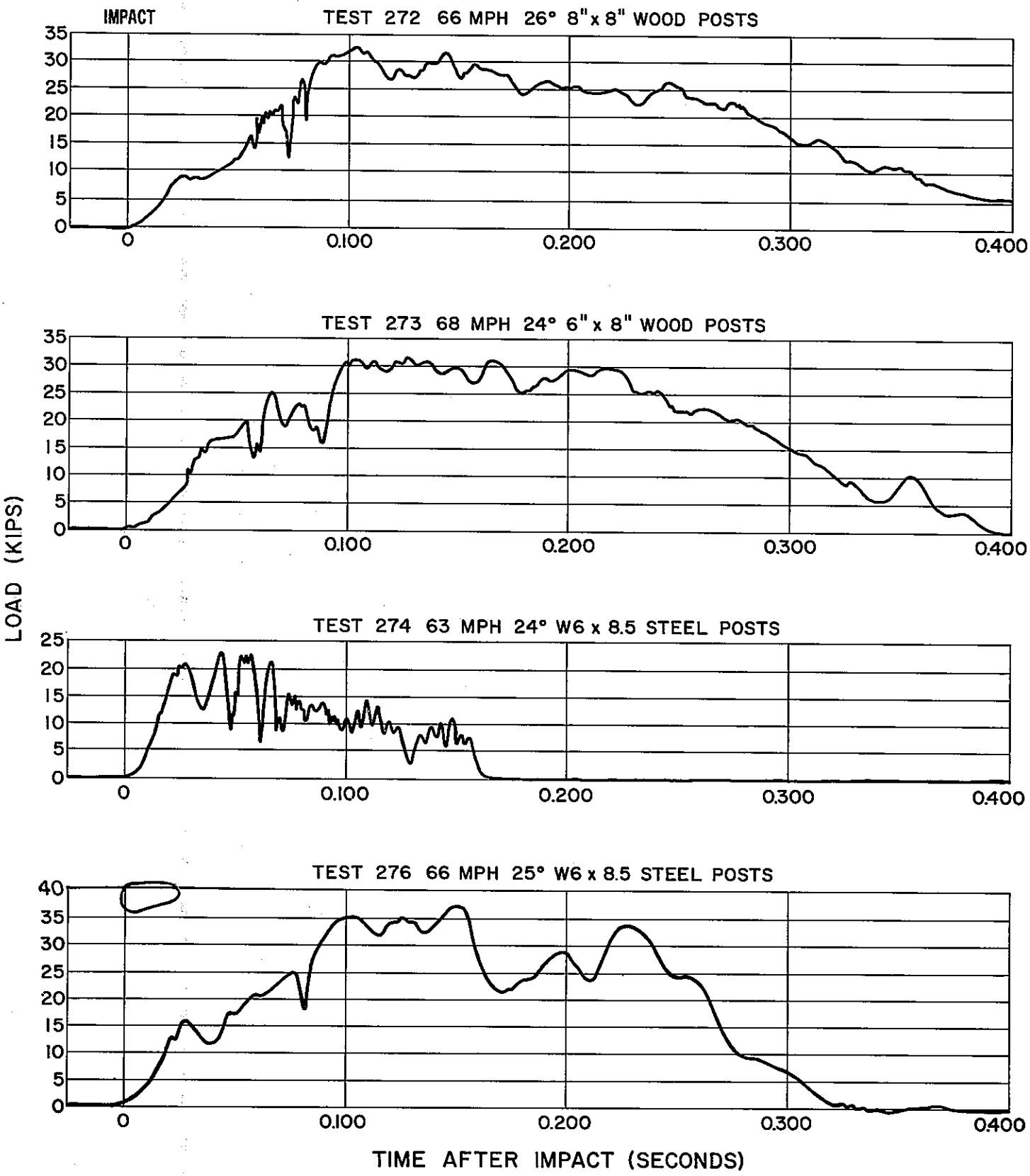

ClibPDF - www.fastio.com

The Southwest Research Institute (SWRI) also has conducted several successful tests on guardrail systems with W6 x 8.5 (152 mm x 12.65 kgf/m) steel posts and blocks. SWRI Test 141 seems to confirm the effectiveness of backup plates on a steel post guardrail system[8].

ClibPDF - www.fastio.com

IV. ACKNOWLEDGEMENTS

This work was accomplished in cooperation with the United States Department of Transportation, Federal Highway Administration, as Item D-4-37 of Work Program HPR-PR-1(10) Part 2, Research, and was titled, "Dynamic Full Scale Impact Tests on Rails and Barriers". The contents of this report reflect the views of the Transportation Laboratory which is responsible for the facts and the accuracy of the data presented herein. The contents do not necessarily reflect the official views or policies of the State of California or the Federal Highway Administration. This report does not constitute a standard, specification, or regulation.

The authors appreciate the fine efforts of Transportation Laboratory employees who assisted with the research: L. Staus, O. Box, V. Martin, J. Keesling, W. Crozier, D. Parks, R. Pelkey - testing and data reduction; R. Mortensen, L. Green - photography; and R. Johnson, S. Law, D. Gans - instrumentation.

Special appreciation is also due W. R. Juergens and E. J. Tye of the California Division of Highways Traffic Branch who served as consultants on this project.

ClibPDF - www.fastio.com

V. REFERENCES

1. Nordlin, E. F., Field, R. N., and Prysock, R. H., "Dynamic Full Scale Impact Tests of Double Blocked-Out Metal Beam Barriers and Metal Beam Guard Railing, Series X", California Division of Highways, February 1965.

2. Nordlin, E. F., Field, R. N., and Ames, W. H., "Dynamic Tests of Short Sections of Corrugated Metal Beam Guardrail, Series XIII", California Division of Highways, October 1968.

3. Michie, J. D., Calcote, L. R., and Bronstad, M. E., "Guardrail Performance and Design", NCHRP Final Report, January 1970.

4. Michie, J. D., and Bronstad, M. E., "Location, Selection, and Maintenance of Highway Traffic Barriers", NCHRP Report 118, 1971.

5. Highway Research Board Committee on Guardrails and Guide Posts, "Proposed Full-Scale Testing Procedures for Guardrails", Circular 482, September 1962.

ClibPDF - www.fastio.com

6. Shoemaker, N. E., and Radt, H. S., "Summary Report of Highway Barrier Analysis and Test Program", Report No. VJ-1472-V-3, Cornell Aeronautical Laboratory, July 1961.

7. Nordlin, E. F., Woodstrom, J. H., and Hackett, R. P., "Dynamic Tests of the California Type 20 Bridge Barrier Rail, Series XXIII", California Division of Highways, October 1970.

8. NCHRP Research Results Digest 43 - October 1972.

9. Nordlin, E. F., Stoker, J. R., Stoughton, R. L., "Dynamic Tests of Metal Beam Guardrail, Series XXVII", California Division of Highways, April 1974.

10. DeLeys, N. J., "Investigation of a Torsion Post-Beam Rail Type of Bridge Railing", Report No. VJ-2363-V-1, Cornell Aeronautical Laboratory, November 1970.

11. Graham, M. D. et al, "New Highway Barriers: The Practical Application of Theoretical Design", Highway Research Record No. 174 (1967) pp. 88-183.

ClibPDF - www.fastio.com

ClibPDF - www.fastio.com

ClibPDF - www.fastio.com